FE/FG FK/FM

FE.FG

SERVICE MANUAL
2008 Model
FOREWORD

This Service Manual contains maintenance and repair methods for the Mitsubishi Fuso Truck FE. FG Series. Read this manual carefully as an aid in providing correct, efficient maintenance. Please note that the information and specifications contained within this manual may change without notice. This is due to product modifications and continued vehicle improvements that are made throughout the model years. Should you encounter any discrepancy in the information provided, please do not hesitate to contact your nearest Mitsubishi Fuso Dealer or Mitsubishi Fuso Truck of America, Inc.

AUGUST 2007

HOME

GROUP INDEX

GENERAL 00
MAINTENANCE SCHEDULE 01
ENGINE 11
LUBRICATION 12
FUEL AND ENGINE CONTROL 13A
COMMON RAIL SYSTEM 13EA
AUTO CRUISE AND VEHICLE SPEED LIMITATION SYSTEM 13EB
COOLING 14
INTAKE AND EXHAUST 15
EMISSION CONTROL 17
CLUTCH 21
MANUAL TRANSMISSION 22
AUTOMATIC TRANSMISSION 23
TRANSFER 24
PROPELLER SHAFT 25
FRONT AXLE
<FE> 26A
<FG> 26B
REAR AXLE 27
WHEEL AND TIRE 31
FRONT SUSPENSION 33
REAR SUSPENSION 34
BRAKE 35A
ANTI-LOCK BRAKE SYSTEM (ABS) 35E
PARKING BRAKE 36
STEERING 37
BUMPER AND FRAME 41
CAB 42
DOOR 43
EXTERIOR 51
INTERIOR 52
ELECTRICAL 54
HEATER, AIR-CONDITIONER AND VENTILATION 55

Group 00

General

Table of Contents

Back

Home

MITSUBISHI FUSO TRUCK OF AMERICA, Inc.

Pub.No.TWSE0805-00

INDEX

EQUIPMENT TYPE CODES LIST 00-2

POWER TRAIN TABLE 00-3

HOW TO READ THIS MANUAL 00-4

CHASSIS NUMBER, ENGINE NUMBER,
POWER TRAIN LABEL 00-8

VEHICLE IDENTIFICATION NUMBER 00-9

PRECAUTIONS FOR MAINTENANCE OPERATION 00-10

JACKING UP THE VEHICLE 00-22

DIAGNOSIS CODES
1. Diagnosis Codes 00-24
2. Reading and Erasing the Diagnosis Code 00-25

TABLE OF STANDARD TIGHTENING TORQUES 00-30

EQUIPMENT TYPE CODES LIST

Component	Name plate marking	Code description
Engine		
4M50T7	4 M 5 0 T 7	Power version number Turbocharged Order of development within same series Order of development among different series Diesel engine No. of cylinders (4)
Clutch		
C5W33	C 5 W 33	Disc outside diameter Facing material (W: Woven) Load carrying capacity of truck class (tonnage) on which the clutch is primarily used Initial letter of the clutch
Transmission		
M036S5W	M 036 S 5 W	Variation (W: With directly-mounted transfer) Forward speeds Type of mesh (S: Synchromesh) Load carrying capacity of truck class (tonnage) on which the clutch is primarily used Initial letter of the transmission
Propeller shaft		
P3	P 3	Load carrying capacity of truck class (tonnage) on which the clutch is primarily used Initial letter of the propeller shaft
Front axle		
F200T	F 200 T	Vehicle type (T: Truck) Load carrying capacity of truck class (tonnage) on which the clutch is primarily used Initial letter of the front axle
Rear axle		
R033T	R 03 3 T	Vehicle type (T: Truck) Order of development within same series Load carrying capacity of truck class (tonnage) on which the clutch is primarily used Initial letter of the rear axle
Reduction and differential		
D033H	D 03 3 H	Tooth profile (H: Hypoid gear) Order of development within same series Load carrying capacity of truck class (tonnage) on which the clutch is primarily used Initial letter of the reduction & differential

Vehicle model	Engine	Clutch	Transmission	Propeller shaft	Rear axle	Reduction & differential
FE83DDZSLSUH	4M50T8	Torque converter	M036A6	P3	R033T	D033H
FE83DEZSLSUH	4M50T8	Torque converter	M036A6	P3	R033T	D033H
FE83DGZSLSUH	4M50T8	Torque converter	M036A6	P3	R033T	D033H
FE84DDZSLSUH	4M50T8	Torque converter	M036A6	P3	R033T	D033H
FE84DEZSLSUH	4M50T8	Torque converter	M036A6	P3	R033T	D033H
FE84DGZSLSUH	4M50T8	Torque converter	M036A6	P3	R033T	D033H
FE84DHWSLSUH	4M50T8	Torque converter	M036A6	P3	R033T	D033H
FE84DJZSLSUH	4M50T8	Torque converter	M036A6	P3	R033T	D033H
FE85DDZSLSUG	4M50T8	C5W33	M036S6	P3	R035T	D035H
FE85DEZSLSUG	4M50T8	C5W33	M036S6	P3	R035T	D035H
FE85DGZSLSUG	4M50T8	C5W33	M036S6	P3	R035T	D035H
FE85DJZSLSUG	4M50T8	C5W33	M036S6	P3	R035T	D035H
FE85DKZSLSUG	4M50T8	C5W33	M036S6	P3	R035T	D035H
FE85DDZSLSUH	4M50T8	Torque converter	M036A6	P3	R035T	D035H
FE85DEZSLSUH	4M50T8	Torque converter	M036A6	P3	R035T	D035H
FE85DGZSLSUH	4M50T8	Torque converter	M036A6	P3	R035T	D035H
FE85DJZSLSUH	4M50T8	Torque converter	M036A6	P3	R035T	D035H
FE85DKZSLSUH	4M50T8	Torque converter	M036A6	P3	R035T	D035H
FG84DF6SLSUJ	4M50T7	C5W33	M036S5W	Front: P2 Rear: P3	R033T	Front: D1H Rear: D033H

HOW TO READ THIS MANUAL

This manual consists of the following parts:
- Specifications
- Structure and Operation
- Troubleshooting
- On-vehicle Inspection and Adjustment
- Service procedures

On-vehicle Inspection and Adjustment
- Procedures for inspection and adjustment of individual parts and assemblies as mounted on the vehicle are described including specific items to check and adjust. Specified or otherwise, inspection should be performed for looseness, play, backlash, crack, damage, etc.

Service procedures
- Procedures for servicing components and parts off the vehicle are described centering on key points in their removal, installation, disassembly, reassembly, inspection, etc.

Inspection
- Check items subject to “acceptable/unacceptable” judgement on the basis of service standards are all given.
- Some routine visual checks and cleaning of some reused parts are not described but must always be included in actual service work.

Caution
- This service manual contains important cautionary instructions and supplementary information under the following four headings which identify the nature of the instructions and information:

DANGER ⚠	Precautions that should be taken in handling potentially dangerous substances such as battery fluid and coolant additives.
WARNING ⚠	Precautionary instructions, which, if not observed, could result in serious injury or death.
CAUTION ⚠	Precautionary instructions, which, if not observed, could result in damage to or destruction of equipment or parts.
NOTE	Suggestions or supplementary information for more efficient use of equipment or better understanding.

Terms and Units
- Front and rear
  The forward running direction of the vehicle is referred to as the front and the reverse running direction is referred to as the rear.

- Left and right
  Left hand side and right hand side, when facing the forward running direction of the vehicle, are respectively left and right.

Standard value
- Standard value dimensions in designs indicating: the design dimensions of individual parts, the standard clearance between two parts when assembled, and the standard value for an assembly part, as the case may be.

Limit
- When the value of a part exceeds this, it is no longer serviceable in respect of performance and strength and must be replaced or repaired.

Tightening torque

- Values are directly specified for out-of-standard tightening torques for bolts and nuts.
- Where there is no specified figure for tightening torque, follow the table covering standard tightening torques. (Values for standard tightening torques are based on thread size and material.)
- When the item is to be tightened in a wet state, “wet” is indicated. Where there is no indication, read it as dry.

Units

- Tightening torques and other parameters are given in SI* units with imperial unit and metric units added in brackets { }.

***SI: Le Système International d’Unités**

Example: 390 N·m {290 ft.lbs, 40 kgf·m}

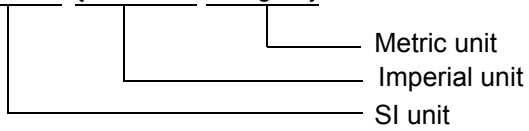

Unit		SI unit {imperial unit, metric unit}	Conversion factor
Force		N {lbs, kgf}	9.80665 N {2.2046 lbs, 1 kgf}
Moment of force		N·m {ft.lbs, kgf·m}	9.80665 N·m {7.2329 ft.lbs, 1 kgf·m}
Pressure	Positive pressure	kPa {psi, kgf/cm^2}	98.0665 kPa {14.22 psi, 1 kgf/cm^2}
	Vacuum pressure	kPa {in.Hg, mmHg}	0.133322 kPa {0.03937 in.Hg, 1 mmHg}
Volume		J {BTU, kcal}	4186.05 J {3.96825BTU, 1 kcal}
Heat quantity		W {BTU/h, kcal/h}	1.16279W {3.96825BTU/h, 1 kcal/h}

Example: 30 mm {1.18 in.}

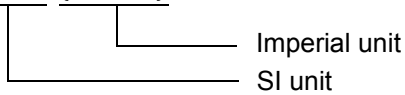

Unit	SI unit {imperial unit}	Conversion factor
Length	mm {in.}	1 mm {0.03937 in.}
	m {ft.}	1 m {3.2808 ft.}
	km {mile}	1 km {0.6214 mile}
Mass	kg {lb}	1 kg {2.2046 lb}
	g {oz}	1 g {0.035274 oz}
Temperature (in degree Celsius)	°C {°F}	1°C {(1°C × 1.8 + 32)°F}
Velocity	km/h {mph}	1 km/h {0.6214 mph}
	m/s {ft/s}	1 m/s {3.281 ft/s}
Volume	L {qts}, L {gal}	1 L {1.05336 qts}, 1 L {0.2642 gal}
	cm^3 {cu.in.}	1 cm^3 {0.061023 cu.in.}
Area	m^2 {in^2}, m^2 {ft^2}	1 m^2 {1.550 × 10^3 in^2}, 1 m^2 {1.076 × 10 ft^2}

HOW TO READ THIS MANUAL

Symbol	Denotation	Application	Remarks
Ta	Tightening torque	Parts not tightened to standard torques (standard torques specified where necessary for servicing)	Specified values shown in table See Table of Standard Tightening Torques for parts for which no tightening torques are specified.
P	Locating pin	Parts to be positioned for installation	
⊗	Non-reusable parts	Parts not to be reused	
a	Lubricant and/or sealant	Parts to be coated with lubricant or sealant for assembly or installation	Necessary lubricant and/or sealant, quantity required, etc. are specified in table.
a	Special tool	Parts for which special tools are required for service operation	Tool name/shape and part number are shown in table.
*a	Associated part	Parts associated with those removed/disassembled for servicing	

Denotes that tightening torque is specified.

WHEEL HUB AND BRAKE DRUM

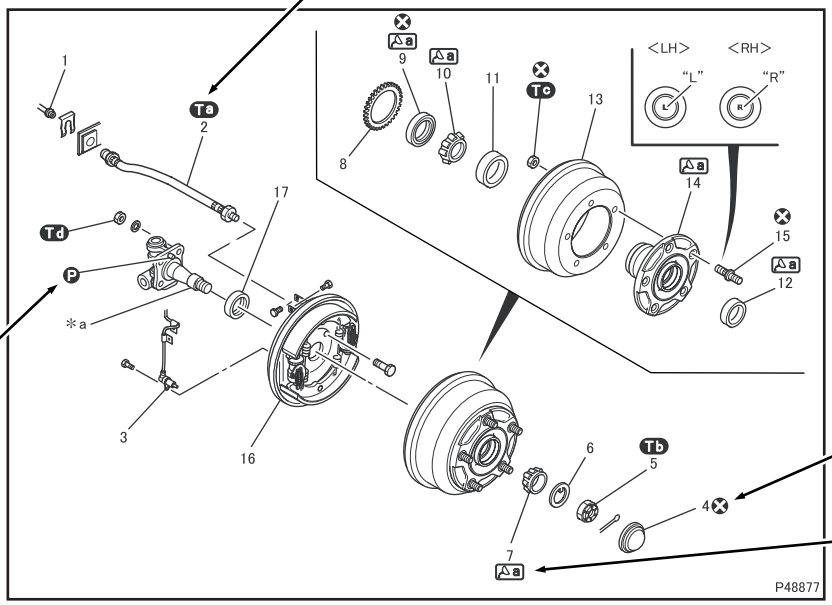

Indicates position of locating pin.

Identifies non-reusable parts.

Denotes that coating with lubricant or sealant is required.

● Disassembly sequence

1 Brake pipe
2 Brake hose
3 Wheel speed sensor
4 Hub cap
5 Lock nut
6 Lock washer
7 Outer bearing inner race
8 Anti-lock brake system rotor
9 Oil seal
10 Inner bearing inner race
11 Inner bearing outer race
12 Outer bearing outer race
13 Brake drum
14 Wheel hub
15 Hub bolt
16 Front drum brake (See Gr.35A)
17 Spacer

*a: Knuckle
P: Locating pin
⊗: Non-reusable parts

● Assembly sequence

Follow the disassembly sequence in reverse.

Service standards (unit: mm {in.})

Location	Maintenance item		Standard value	Limit	Remedy
7, 10, 11, 12	Starting torque of wheel hub bearing (Tangential force at hub bolt position with oil seal fitted in)		1 to 3.5 N·m {0.7 to 2.6 ft.lbs, 0.10 to 0.35 kgf·m} (Tangential force:8.8 to 28.4 N {2.0 to 6.4 lbs, 0.9 to 2.9 kgf})	–	Adjust or replace
14	Brake drum	Inside diameter	320 {12.6}	322 {12.7}	Repair or replace
		Cylindricality	0.05 {0.0020}	0.05 {0.0079}	

These location numbers correspond with disassembly sequence numbers.

P58289N

"Wet" is indicated when part is to be tightened with oil or grease applied to its threaded part.

Tightening torque (unit: N·m {ft.lbs, kgf·m})

Mark	Part to be tightened	Tightening torque	Remarks
Ta	Brake force tightening	13 to 17 {9.6 to 13, 1.3 to 1.7}	–
Tb	Lock nut	113 ± 15 {83 ± 11, 11.5 ± 1.5}	Wet
Tc	Nut (brake drum and wheel hub mounting)	343 ± 39 {250 ± 29, 35 ± 4}	–
Td	Nut (front drum brake mounting)	118 ± 20 {87 ± 15, 12 ± 2}	–

Lubricant and/or sealant

Mark	Point of application	Specified lubricant and/or sealant	Quantity
Sa	Between rolls of outer bearing inner race and inner bearing inner race	Mitsubishi wheel bearing grease	As required
	Inside wheel hub		395 ± 40 g {13.9 ± 1.41 oz}

Special tools (unit: mm {in.})

Mark	Tool name and shape	Part No.	Application
Ca	Hub Cap Wrench A: 0.5°, B: 78° 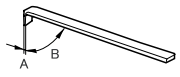 P49261	MB999108	Removal of hub cap
Cb	Oil Seal Installer A: ϕ84 {3.31}, B: ϕ70 {2.76} 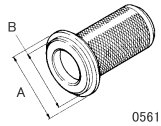 05619	MB999097	Installation of oil seal

Identification marks for special tools are the same as used in the text.

◆ Removal procedure

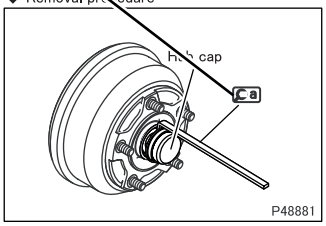

P48881

■Removal: Hub cap

◆Installation procedure◆

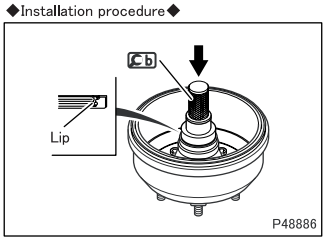

P48886

■Installation: Oil seal

Apply grease to the lip of the oil seal, then fit the oil seal onto the wheel huh in the illustrated direction.

P58290N

CHASSIS NUMBER, ENGINE NUMBER, POWER TRAIN LABEL

- Chassis and engine numbers are allocated to each vehicle and engine respectively in the order of production. These numbers are required at vehicle inspection for registration.

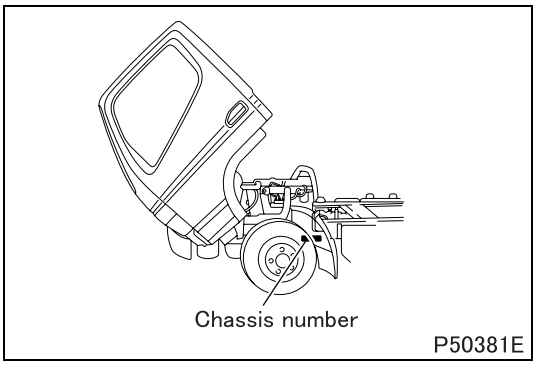

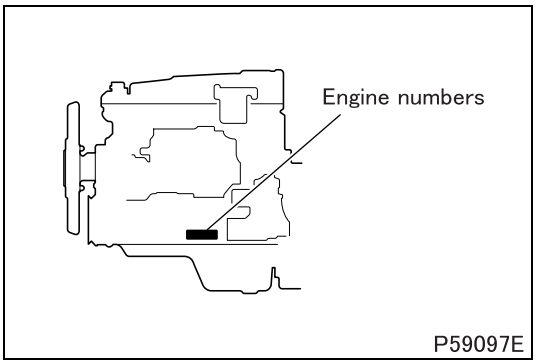

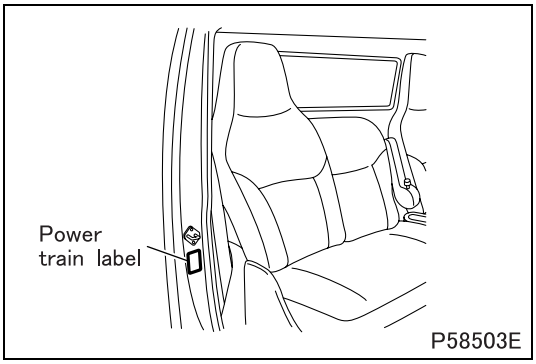

- Power train label located in the position illustrated indicates the vehicle model, chassis number and information relevant to the vehicle's power - train components.

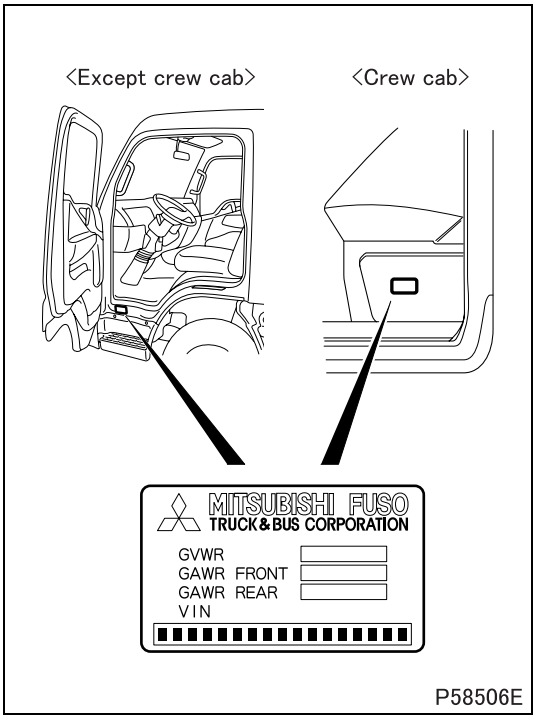

- The vehicle identification number is punch-marked on the plate, which is attached in the position as illustrated.
  The vehicle identification number consists of a 17-digit set of alphanumeric characters. Each digit represents the following specifications.

J	L	6	A	A	D	1	S	■	9	K	■■■■■■
(1)	(2)	(3)	(4)	(5)	(6)	(7)	(8)	(9)	(10)	(11)	(12)

(1)	Country	J:	Japan
(2)	Make	L:	Mitsubishi Fuso
(3)	Type	6:	Incomplete vehicle
(4)	Gross vehicle weight / Brake system		
		A:	10,001 to 14,000 lbs. / Hydraulic
		B:	14,001 to 16,000 lbs. / Hydraulic
		C:	16,001 to 19,500 lbs. / Hydraulic
(5)	Line	A:	FE83D
		B:	FE84D
		C:	FE85D
		D:	FE84□W
		E:	FG84D
(6)	Series (Wheel base)	D:	2.9 to 3.19 m (9.51 to 10.46 ft.)
		E:	3.2 to 3.49 m (10.49 to 11.44 ft.)
		F:	3.5 to 3.79 m (11.48 to 12.43 ft.)
		G:	3.8 to 4.09 m (12.46 to 13.41 ft.)
		H:	4.1 to 4.39 m (13.45 to 14.40 ft.)
		J:	4.4 to 4.69 m (14.43 to 15.38 ft.)
		K:	4.7 to 4.99 m (15.41 to 16.37 ft.)
(7)	Cab chassis type	1:	Chassis cab
(8)	Engine	S:	4.899 L Diesel turbo charged and charge air cooled
(9)	Check digit		
(10)	Model year	9:	2009
(11)	Plant	K:	Kawasaki
(12)	Plant sequential number		

PRECAUTIONS FOR MAINTENANCE OPERATION

DANGER ⚠

- **This product contains or emits chemicals known to the State of California to cause cancer and birth defects or other reproductive harm.**

- Before performing service operations, inquire into the customer's complaints and ascertain the condition by checking the total distance traveled, the conditions under which the vehicle is operated, and other relevant factors on the vehicle. And note the necessary information. This information will help you to service the vehicle efficiently.
  - Check the location of the fault, and identify its cause. Based on your findings, determine whether parts must be removed or disassembled. Then, follow the service procedure given in this manual.

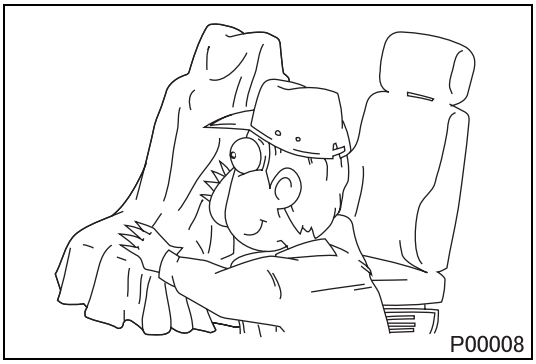
P00008

- Perform service operations on a level surface. Before starting, take the following preparatory steps:
  - To prevent soiling and damage, place covers over the seats, trim and floor in the cab and over the paintwork of the body.

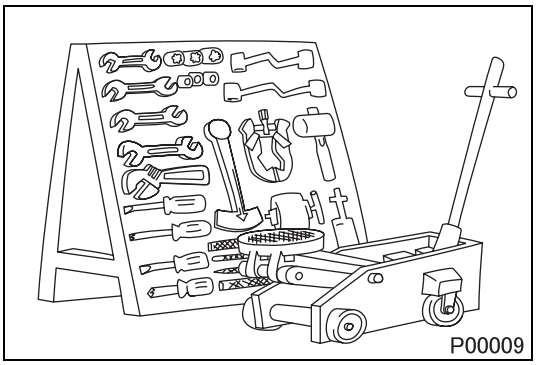
P00009

- Prepare all the general and special tools necessary for the job.

WARNING ⚠

- **Special tools must be used wherever specified in this manual. Do not attempt to use other tools since they could cause injuries and/or vehicle damage.**

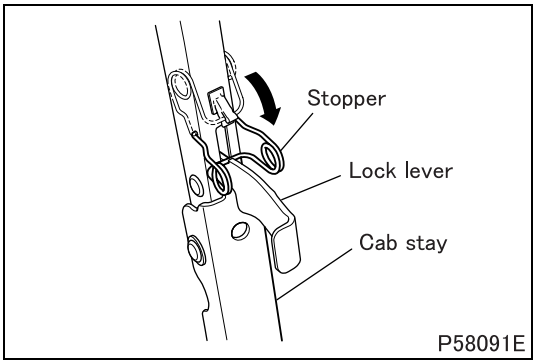

P58091E

- After manually tilting the cab, be sure to engage the stopper with the lock lever to secure the cab stay in a rigid state.

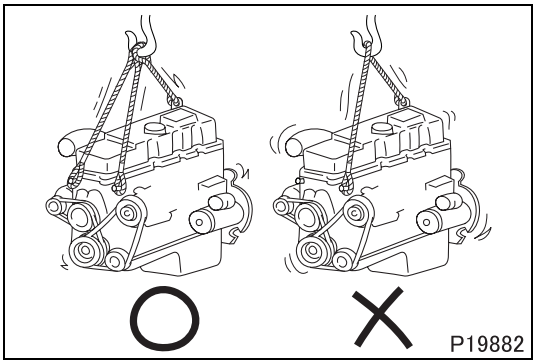
P19882

- Take extreme care when removing/installing heavy items such as engine, transmission and axle. When lifting heavy items using a cable etc., observe the following precautions.
  - Identify the mass of the item being lifted. Use the cable that is strong enough to support the mass.

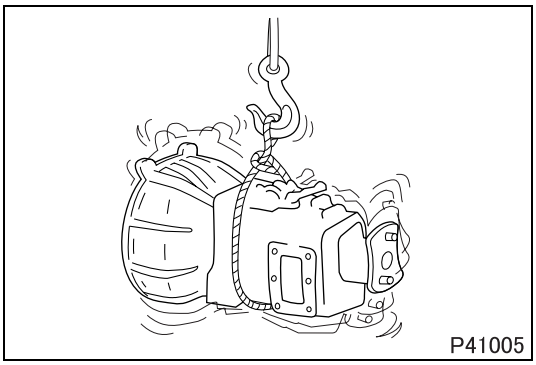
P41005

  - If lifting eyes are not provided on the item being lifted, tie a cable around the item taking into account the item's center of gravity.

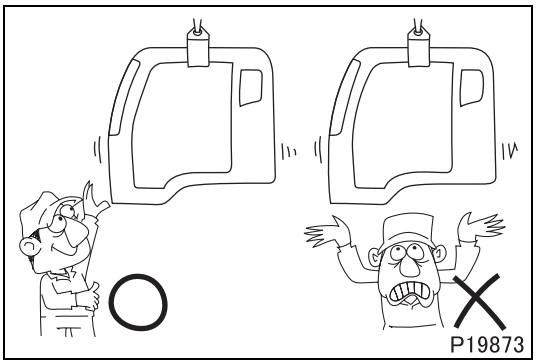
P19873

  - Do not allow anyone to pass or stay under a lifted item which may possibly fall.

P00012

- Never work in shoes that have oily soles.
  When working with a partner or in a group, use pre-arranged signals and pay constant attention to safety. Be careful not to touch switches and levers unintentionally.

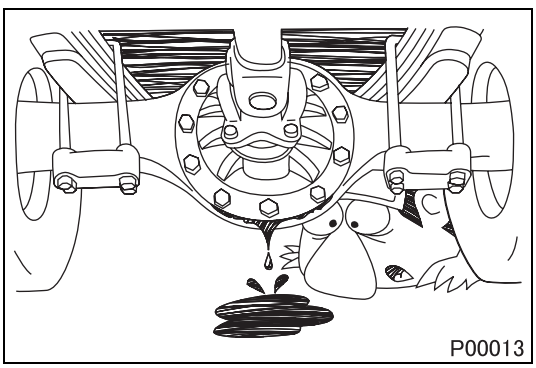
P00013

- Inspect for oil leakage etc. before washing the vehicle. If the order is reversed, any oil leakage or fault that may exist could go unnoticed during inspection.

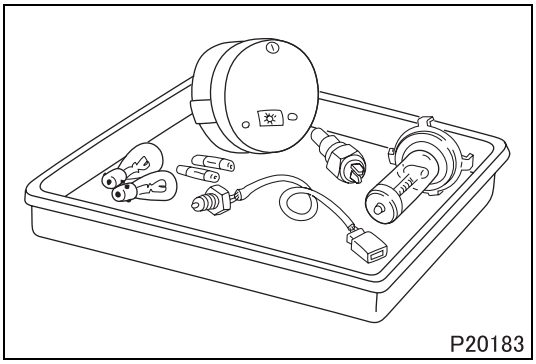
P20183

- Prepare replacement parts ready for installation.

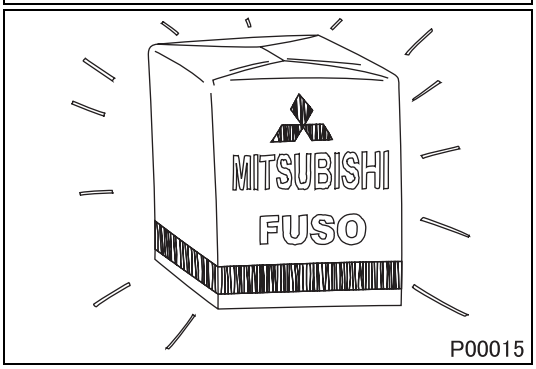

P00015

- Oil seals, packings, O-rings and other rubber parts, gaskets, and split pins must be replaced with new ones after removal. Use only genuine MITSUBISHI replacement parts.

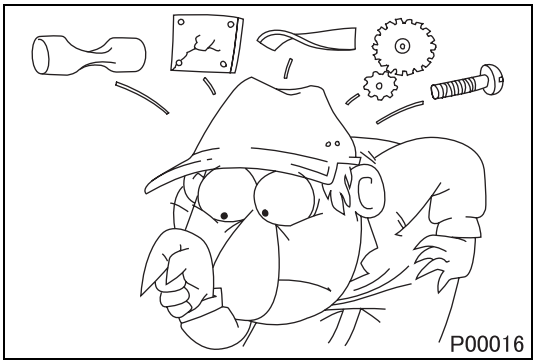
P00016

- When disassembling parts, visually check them for wear, cracks, damage, deformation, deterioration, rust, corrosion, defective rotation, fatigue, clogging and any other possible defect.

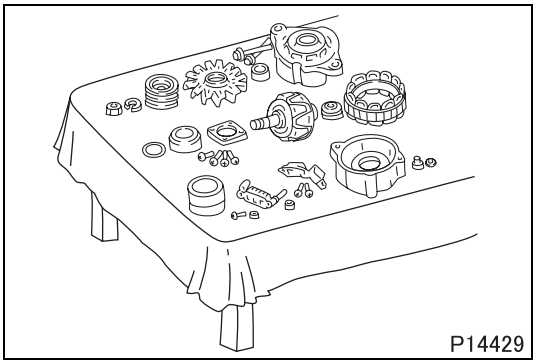
P14429

- To facilitate correct reassembly of parts, make alignment marks on them before disassembly and arrange disassembled parts neatly. Make punch marks and other alignment marks where they will not detract from parts' functionality and appearance.
- After removing parts from the vehicle, cover the area to keep it free of dust.

CAUTION ⚠

- **Be careful not to mix up identical parts, similar parts and parts that have left/right alignments.**
- **Keep new replacement parts and original (removed) parts separately.**

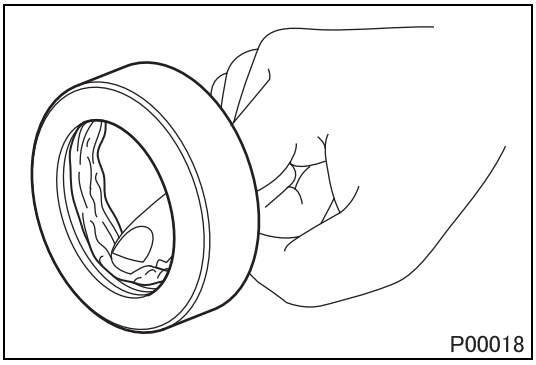
P00018

- Apply the specified oil or grease to U-seals, oil seals, dust seals and bearings before reassembly.
- Always use the specified oils and greases when performing inspection or replacement. Immediately wipe away any excess oil or grease with a rag.

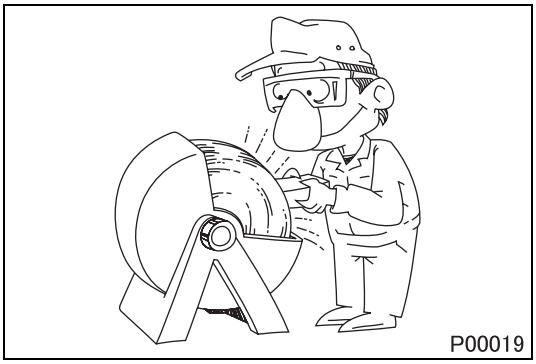
P00019

- Wear safety goggles when using a grinder or welder. Wear gloves when necessary, and watch out for sharp edges and other items that might wound your hands.

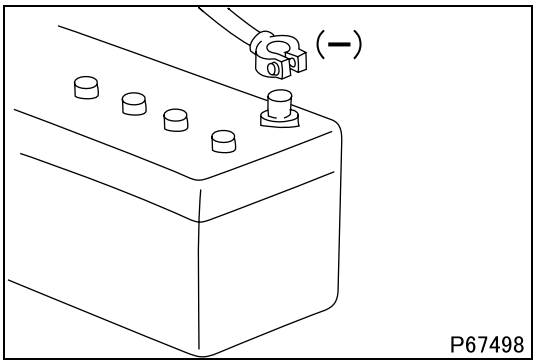

P67498

- Before working on the electrical system, disconnect the (–) battery cable to prevent short circuits.

CAUTION ⚠

- **Make sure the starter switch and lighting switches are OFF before disconnecting or connecting battery cable. Semiconductor components may otherwise be damaged.**

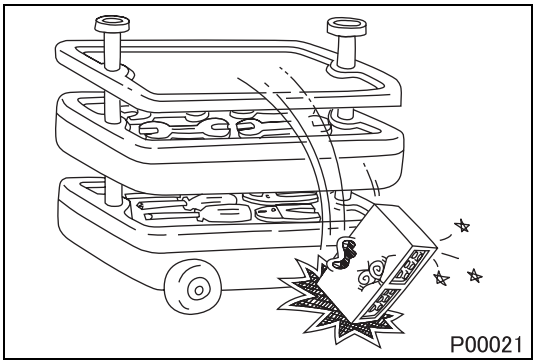
P00021

- Carefully handle sensors relays, and other items that are sensitive to shock and heat. Do not remove or paint the cover of any control unit.

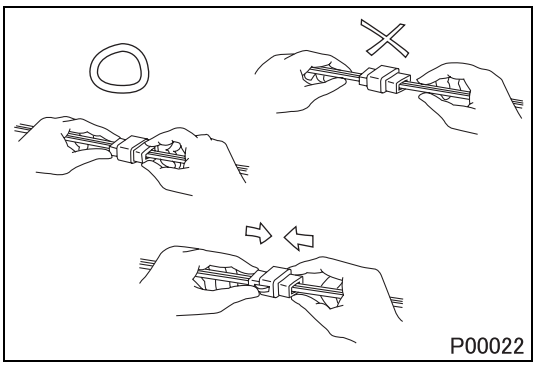
P00022

- When separating connectors, grasp the connectors themselves rather than the harnesses.
- To separate locking connectors, first push them in the direction of the arrows. To reconnect locking connectors, push them together until they click.

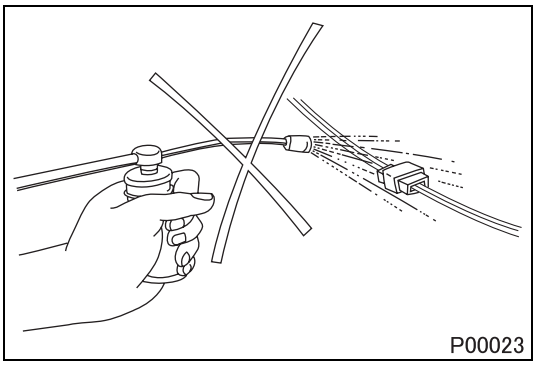
P00023

- Before washing the vehicle, cover electrical parts to keep them dry. (Use plastic sheets or the like.) Keep water away from harness connectors and sensors and immediately wipe off any water that gets on them.

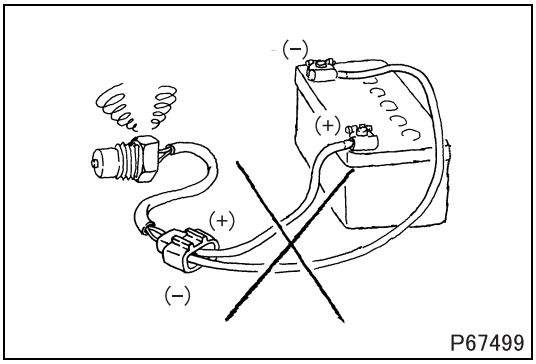

- When applying a voltage to a part for inspection purposes, check that the (+) and (–) cables are connected properly then gradually increase the voltage from zero. Do not exceed the specified voltage.
  Remember that control units and sensors do not necessarily operate on the battery voltage.

1. Handling Precautions for Electric Circuits

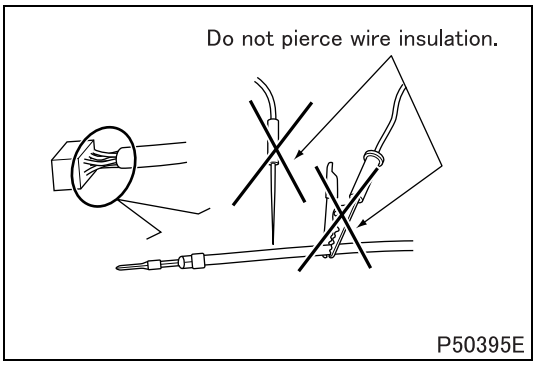

CAUTION ⚠

- **Do not pierce wire insulation with test probes or alligator clips when performing electrical inspections. Doing so can, particularly with the chassis harness, hasten corrosion.**

1.1 Inspection of harnesses

(1) Inspections with connectors fitted together

(1.1) Waterproof connectors

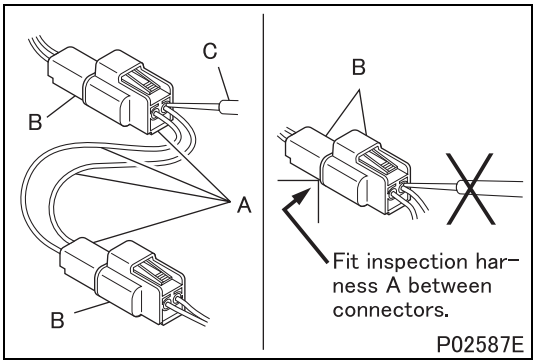

- Connect an inspection harness and connector A between the connectors B of the circuit to be inspected. Perform the inspection by applying a test probe C to the connectors of the inspection harness. Do not insert the test probe C into the wire-entry sides of the waterproof connectors since this would damage their waterproof seals and lead to rust.

(1.2) Non-waterproof connectors

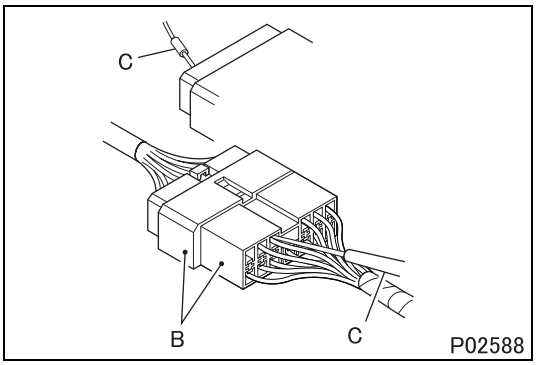

- Perform the inspection by inserting a test probe C into the wire-entry sides of the connectors. An extra-narrow probe is required for control unit connectors, which are smaller than other types of connector. Do not force a regular-size probe into control unit connectors since this would cause damage.

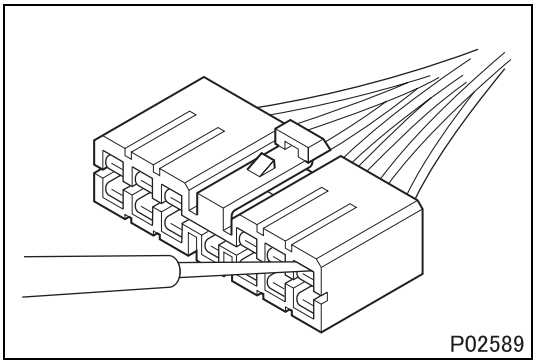
P02589

(2) Inspections with connectors separated

(2.1) Inspections on female terminals

- Perform the inspection by carefully inserting a test probe into the terminals. Do not force the test probe into the terminals since this could deform them and cause poor connections.

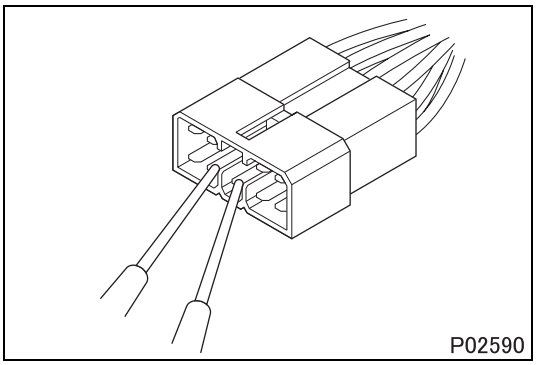
P02590

(2.2) Inspections on male terminals

- Perform the inspection by applying test probes directly to the pins.

CAUTION ⚠

- **Be careful not to short-circuit pins together with the test probes. With control unit connectors, short-circuiting of pins can cause damage to the control unit's internal circuitry.**

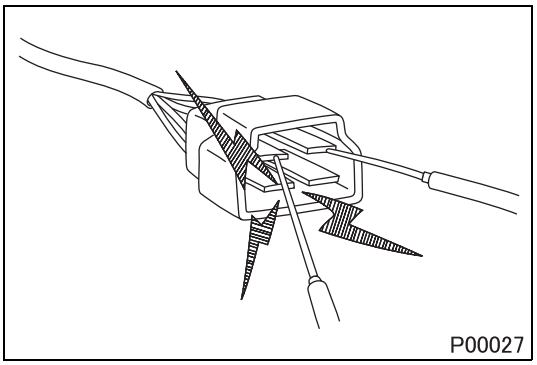
P00027

- When using a multimeter to check continuity, do not allow the test probes to touch the wrong terminals.

1.2 Inspection of connectors

(1) Visual inspection

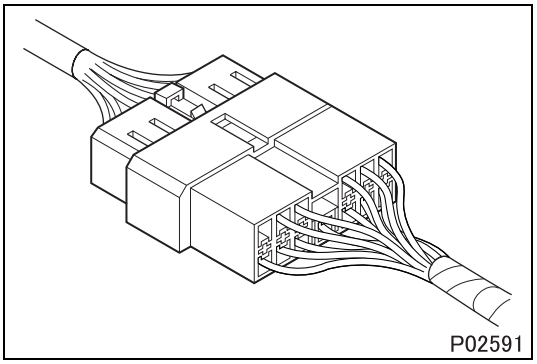
P02591

- Check that the connectors are fitted together securely.

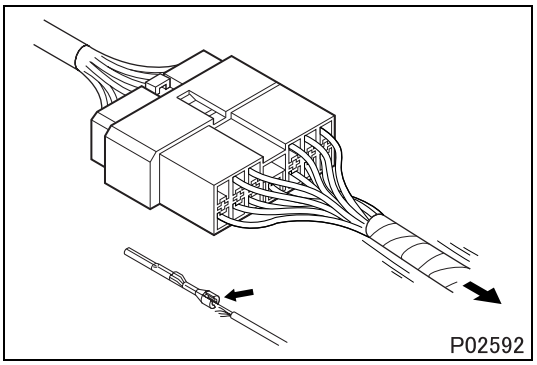
P02592

- Check whether wires have been separated from their terminals due to pulling of the harness.

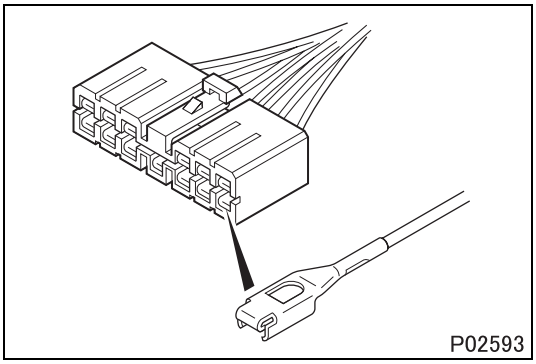
P02593

- Check that male and female terminals fit together tightly.

- Check for defective connections caused by loose terminals, by rust on terminals, or by contamination of terminals by foreign substances.

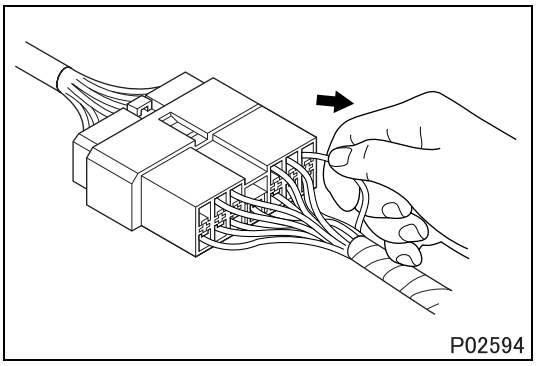
P02594

(2) Checking for loose terminals

- If connector terminal retainers become damaged, male and female terminals may not mate with each other when the connector bodies are fitted together. To check for such terminals, gently pull each wire and see whether any terminals slip out of their connector housings.

1.3 Inspections when a fuse blows

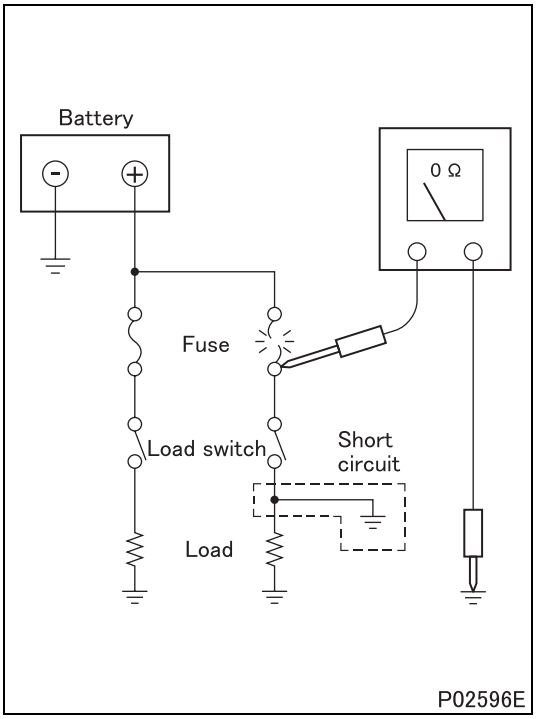

P02596E

- Remove the fuse, then measure the resistance between ground and the fuse's load side.
  Next, close the switch of each circuit connected to the fuse. If the resistance measurement between any switch and ground is zero, there is a short circuit between the switch and the load. If the resistance measurement is not zero, the circuit is not currently short-circuited; the fuse probably blew due to a momentary short circuit.

- The main causes of short circuits are as follows:
  - Harnesses trapped between chassis parts
  - Harness insulation damage due to friction or heat
  - Moisture in connectors or circuitry
  - Human error (accidental short-circuiting of components)

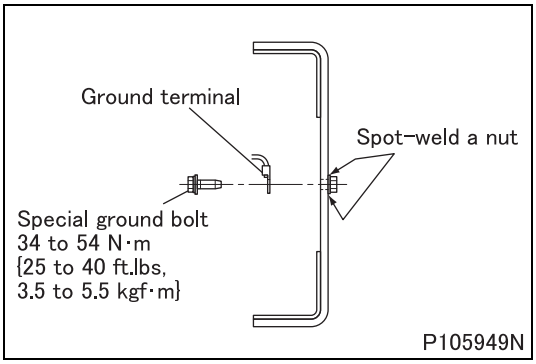

1.4 Inspection of chassis ground

- A special ground bolt is used to tighten a ground terminal. When servicing the ground point, be sure to follow the procedures described below:
  - When reinstalling the ground bolt
    Tighten the ground bolt to the specified torque.
  - When relocating the ground point
    A special ground bolt must be used. Spot-weld a nut to a frame and tighten the ground bolt to the specified torque. Be sure to apply touch-up paint to the welded point.

2. Service Precautions for Alternators

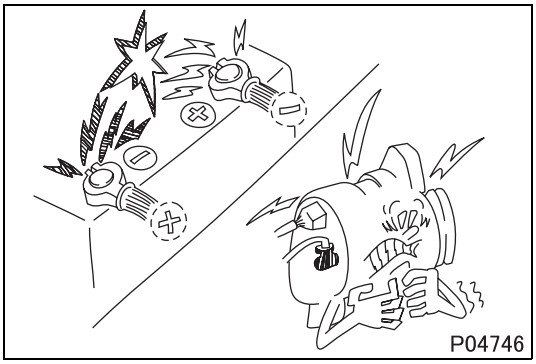

- When servicing alternators, observe the following precautions:
  - Never reverse the polarity of battery connections.
    If the polarity of the battery connections were to be reversed, a large current would flow from the battery to the alternator, damaging the diodes and regulator.

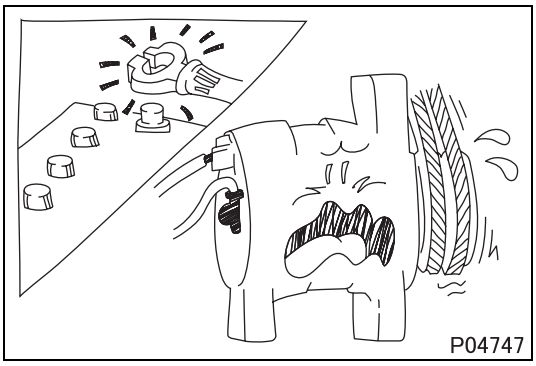

- Never disconnect the battery cables with the engine running.
  Disconnection of the battery cables during engine operation would cause a surge voltage, leading to deterioration of the diodes and regulator.

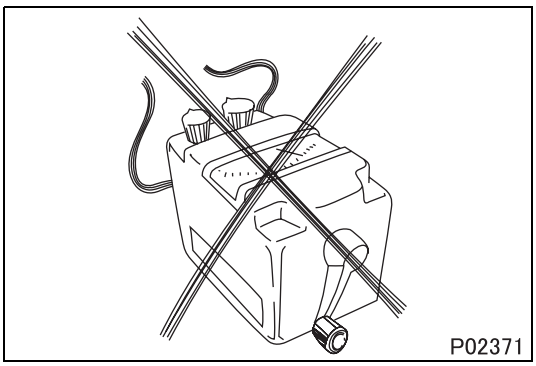

- Never perform inspections using a high-voltage multimeter.
  The use of a high-voltage multimeter could damage the diodes and regulator.

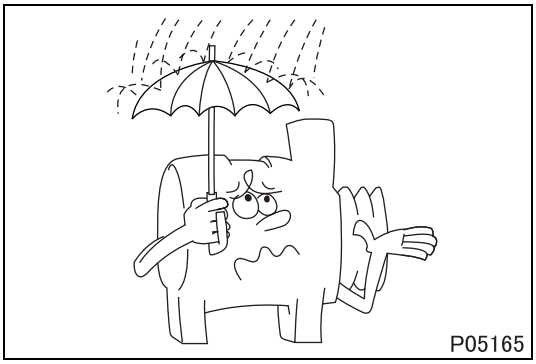

- Keep alternators dry.
  Water on alternators can cause internal short circuits and damage.

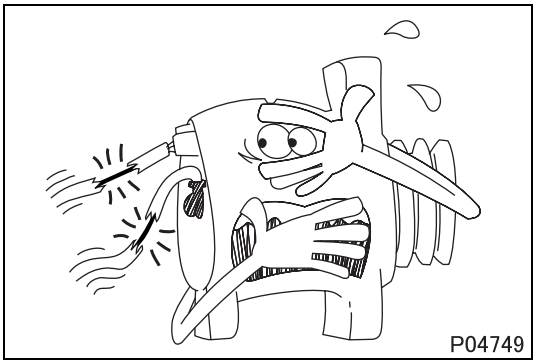

- Never operate an alternator with the B and L terminals short-circuited. Operation with the B and L terminals connected together would damage the diode trio.

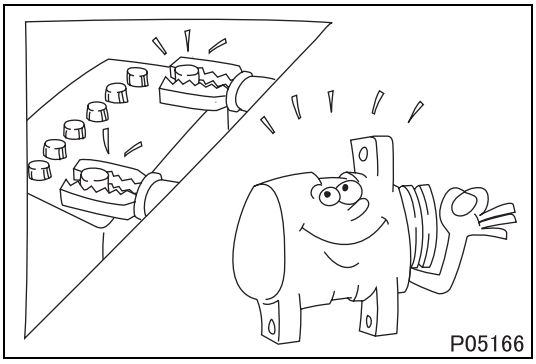

- Disconnect the battery cables before quick-charging the battery with a quick charger.
  Unless the battery cables are disconnected, quick-charging can damage the diodes and regulator.

3. Intermittent Faults

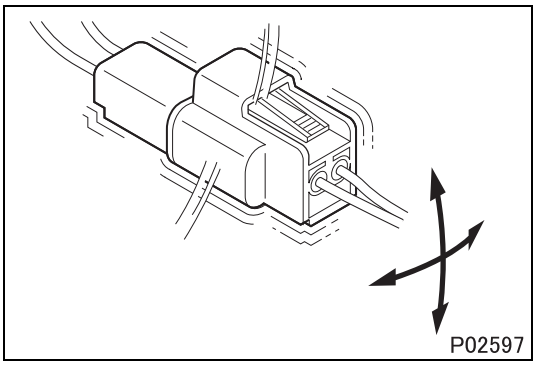

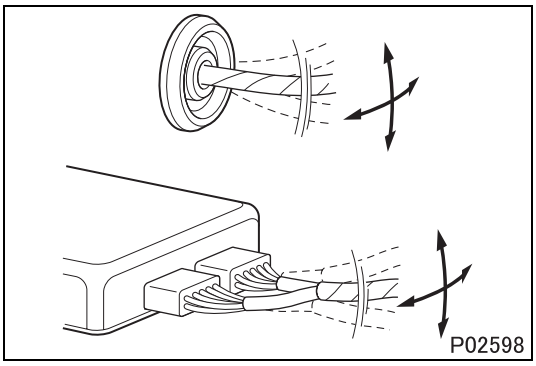

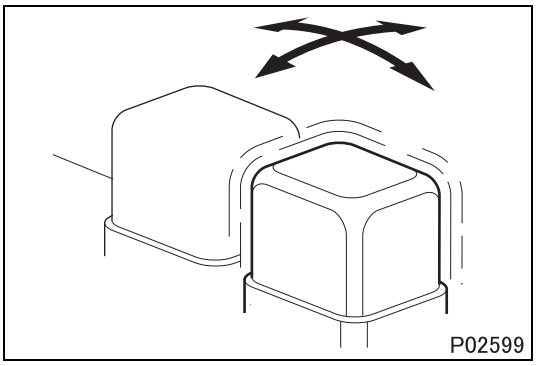

- An intermittent fault typically occurs only under certain operating conditions. Once these conditions have been identified, the cause of the intermittent fault can be ascertained easily. First, ask the customer about the vehicle operating conditions and weather conditions under which the fault occurs. Also ask about the frequency with which the fault occurs and about the fault symptoms. Then, reproduce the fault based on this information.
  In accordance with the conditions under which the fault occurs, determine whether the fault is caused by vibration, heat or other factors. if vibration is a possible factor, see if the fault can be reproduced by performing the following checks on individual connectors and other parts:
  - Gently move connectors up and down and to left and right.
  - Gently move wiring harnesses up and down and to left and right.
  - Gently wiggle sensors and other devices by hand.
  - Gently wiggle wiring harnesses on suspension systems and other moving parts.

- Connectors and other parts to be checked are those included or given as likely fault locations in inspection procedures corresponding to diagnosis codes and/or fault symptoms.

4. Precautions for Arc Welding

- When arc welding is performed, current from the welder flows to ground via the vehicle's metal parts. Unless appropriate steps are taken, this current can damage control units, other electrical devices and wiring harnesses. And any electrical device near the point on the vehicle to which the (–) cable of the welder is connected, might be largely damaged.

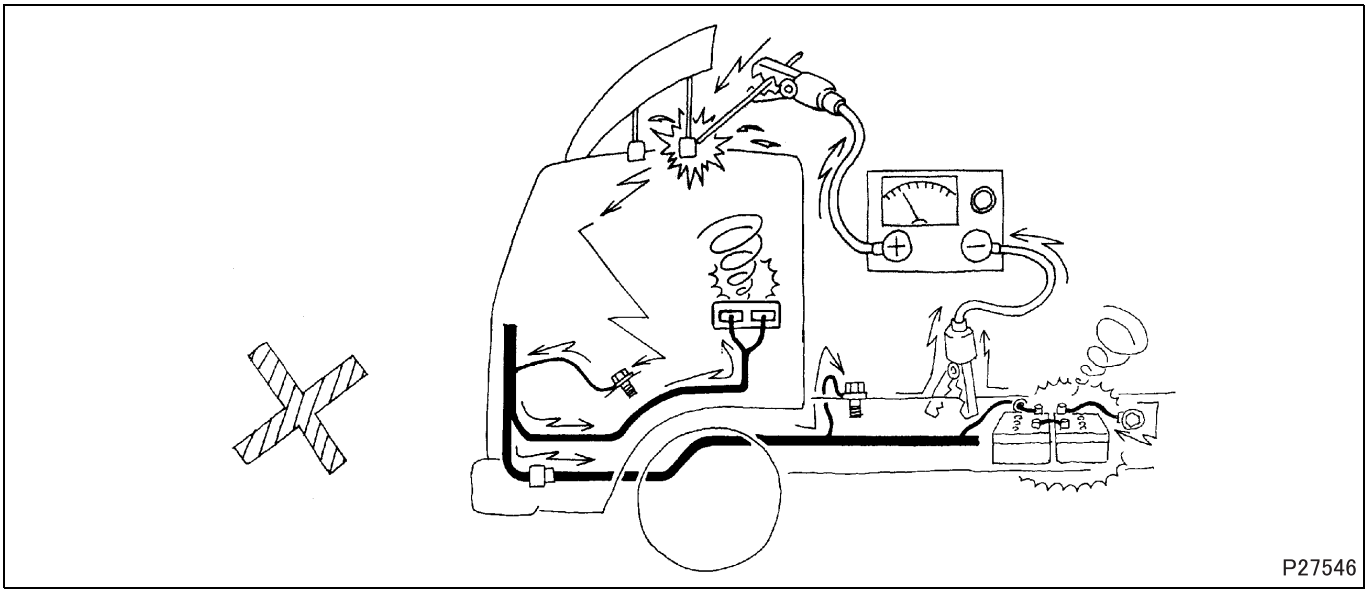

- Current flows backward as shown below.

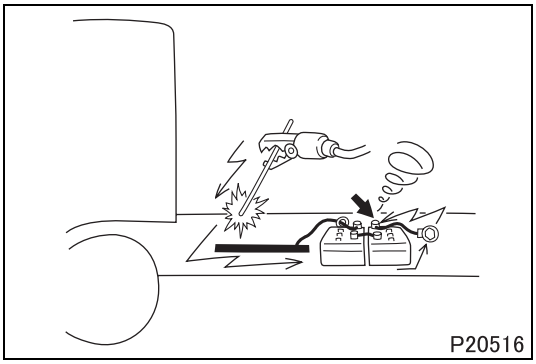

4.1 From battery (–) cable

To prevent damage to the battery and to electrical devices that are connected directly to the battery, it is essential to disconnect the battery's (–) cable.

4.2 Procedure

- Turn the starter switch to the LOCK position.
- Disconnect the battery's (–) cable.
- Cover all parts of the vehicle that may be damaged by welding sparks.
- Connect the welder's (–) cable to the vehicle as close as possible to the area being welded. Do not connect the welder's (–) cable to the cab if the frame is being welded, and vice versa.
- Set the welding current in accordance with the part being welded.

M E M O

JACKING UP THE VEHICLE

<Front of Vehicle>

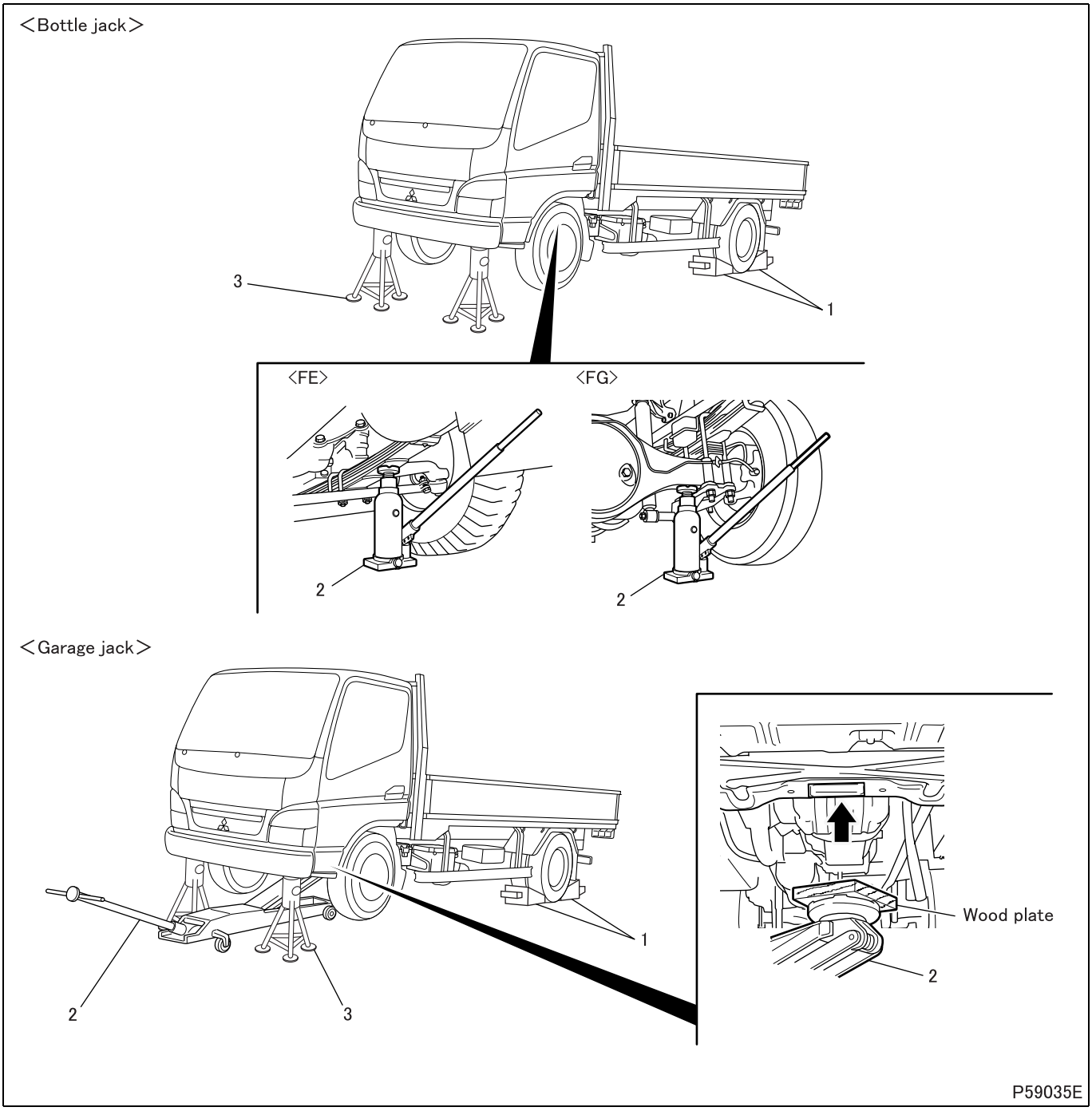

Jacking up procedure

1 Place chocks against the rear wheels.
2 Set a bottle jack or garage jack and jack up the front of the vehicle.
3 Support the front of the vehicle frame on jack stands.

WARNING ⚠

- **Chock the wheels firmly to prevent the vehicle from rolling away.**
- **Do not attempt to remove the chocks until the operation is completed.**
- **It is extremely dangerous to support the vehicle with only bottle jack or garage jack. Be sure to additionally support the front of the vehicle frame on jack stands.**
- **Never attempt to remove any of the bottle jack, garage jack, or jack stands until the operation is completed.**

<Rear of Vehicle>

＜Bottle jack＞

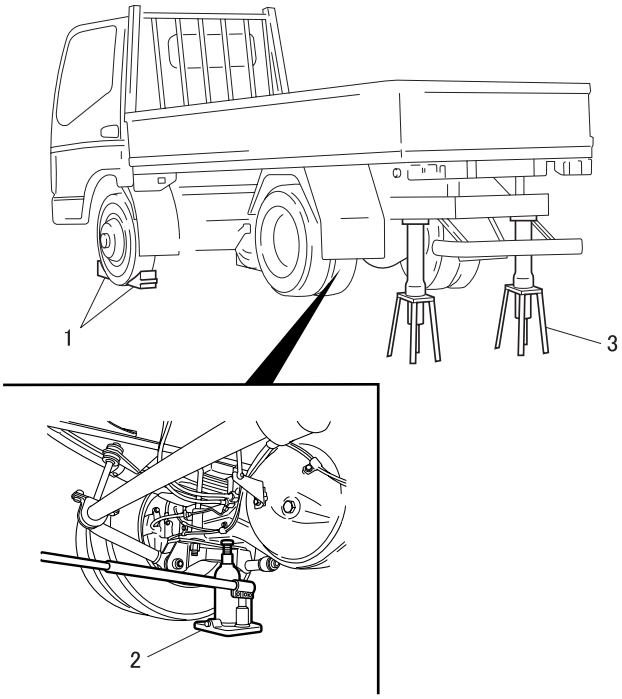

＜Garage jack＞

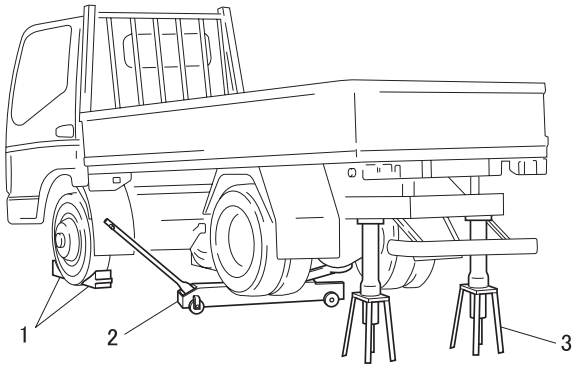

P101652E

Jacking up procedure

1 Place chocks against the rear wheels.
2 Set a bottle jack or garage jack and jack up the rear of the vehicle.
3 Support the vehicle frame on jack stands on both sides.

WARNING ⚠

- **Chock the wheels firmly to prevent the vehicle from rolling away.**
- **Do not attempt to remove the chocks until the operation is completed.**
- **It is extremely dangerous to support the vehicle with only bottle jack or garage jack. Be sure to additionally support the vehicle frame on jack stands on both sides.**
- **Never attempt to remove any of the bottle jack, garage jack, or jack stands until the operation is completed.**

DIAGNOSIS CODES

1. Diagnosis Codes

- Diagnosis codes indicate the faulty sections of the vehicle.
- A fault can be repaired by reading out the diagnosis code(s) stored in the control unit and performing the remedy for that code(s).
- Diagnosis codes can be displayed in the following two methods. Select either of them according to the system to be diagnosed.
  - Using a scanning tool (General Scanning Tool or Multi-Use Tester)
  - Using flashing of a warning lamp on meter cluster
- The table below indicates the systems for which diagnosis codes can be displayed and the methods usable for individual systems.

1.1 Systems and diagnosis code displaying methods

Warning lamp	System	Diagnosis codes displaying methods		Reference Gr
		Scanning tool	Flashing of warning lamp	
ENGINE WARNING or CHECK ENGINE or	Common rail	O	O	13EA
	Turbocharger			15
	Diesel particulate filter			
	Exhaust gas recirculation			17
	Starter continuous energizing preventing function, Preheating system			54
	Vehicle speed limitation (SLD)	O	O	13EB
	Auto cruise			
	Automatic transmission	O	O	23
ABS or	Anti-lock brake system	O	O	35E

1.2 Types of diagnosis codes <Engine control and automatic transmission>

- The diagnosis codes has no distinction of present and past.
- If a fault occurs and an electronic control unit detects the fault, the electronic control unit will store a diagnosis code in memory after a diagnosing time predetermined for each fault content and turn on the warning lamp.
- When the fault has solved, the warning lamp goes off, but the diagnosis code still remains in the memory.
- The diagnosis codes can be erased by using the scanning tool (General Scanning Tool or Multi-Use Tester) or they will be erased automatically after a specified period.

1.3 Types of diagnosis codes <Except engine control and automatic transmission>

(1) System for which present and past codes are discriminately displayed

(1.1) Present diagnosis code

- Fault developed in the vehicle after the starter switch is set to ON is indicated by corresponding diagnosis code.
- The fault warning lamp is lit at the same time.

(1.2) Past diagnosis code

- Past fault developed in the vehicle is indicated by corresponding diagnosis code stored in the memory of the electronic control unit.
- With the vehicle restored to its normal condition or the starter switch turned from OFF to ON after inspection or repair against present diagnosis codes, the present diagnosis code is stored as past diagnosis codes in the memory of the electronic control unit.
- The warning lamp is not lit because the indicated fault is not present one.

2. Reading and Erasing the Diagnosis Code

2.1 Using a Multi-Use Tester

(1) Connecting a Multi-Use Tester

Special tools

Mark	Tool name and shape	Part No.	Application
a	PC 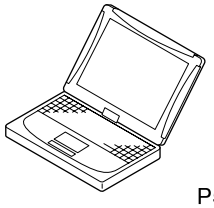 P57295	FMS-E08-1 (Multi-Use Tester-III version)	Data transmission to/from V.C.I.
b	V.C.I. 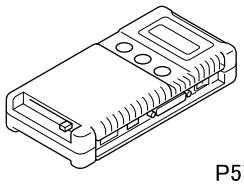 P57296	MH062927	Data transmission between electronic control unit and PC
c	Multi-Use Tester test Harness E A: Harness for inspection and drive recorder B: Harness for drive recorder C: Drive recorder harness D: Cigarette lighter plug harness 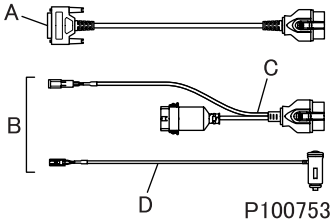 P100753	MH063659 A: MH063661 B: MH063663 C: MH063665 D: MH063666	Power supply to V.C.I. and communication with electronic control unit
d	Multi-Use Tester test harness D (used for extension) 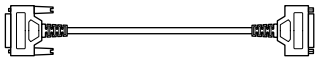 P57299	MH062951	Multi-Use Tester test harness B extension
e	USB cable P57300	MH063668	Communication between V.C.I. and PC

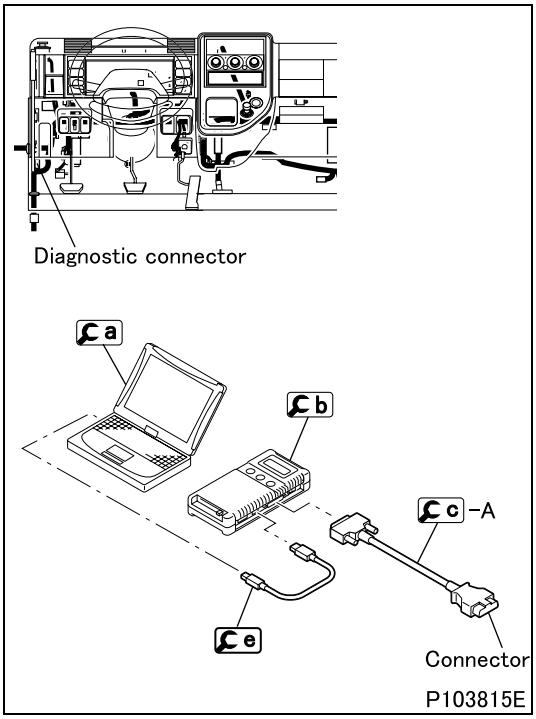

(1.1) To perform system inspection

- Move the starter switch to the LOCK position.
- Connect a, b, c-A and e as shown.
- Connect c-A connector to the diagnostic connector on the vehicle.

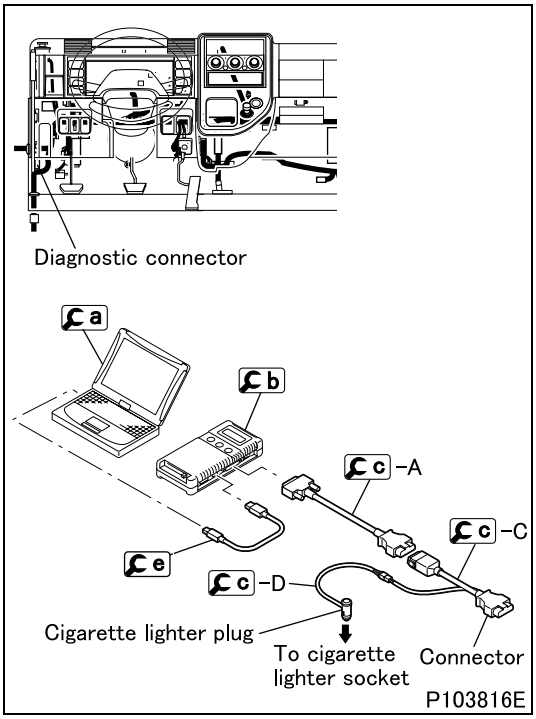

(1.2) To use drive recorder function

- Move the starter switch to the LOCK position.
- Connect a, b, c-A, c-C, c-D and e as shown.
- Connect c-C connector to the diagnostic connector on the vehicle.
- Connect the cigarette lighter plug of c-D to the cigarette lighter socket on the vehicle.

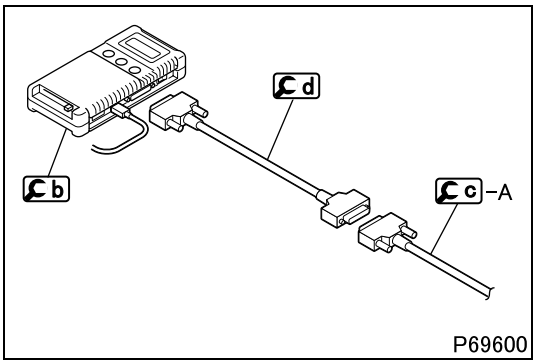

(1.3) To extend the Multi-Use Tester test harness

- Connect d to c-A to extend the test harness to use the Multi-Use Tester outside the vehicle.

(2) Access of diagnosis code

- Set the starter switch to ON.
- Operate the Multi-Use Tester for a display of necessary diagnosis code stored in the memory of the electronic control unit and identify the location of the fault.

(3) Clearing of diagnosis code

- Set the starter switch to ON (the engine not to be started).
- Operate the Multi-Use Tester to delete all the diagnosis codes stored in the memory of the electronic control unit.

2.2 Using a General Scanning Tool

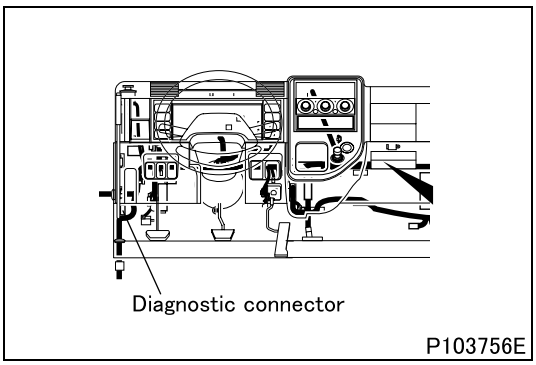

- For the usage of a General Scanning Tool, refer to the instruction manual for that tool.

2.3 Using flashing of a warning lamp on meter cluster

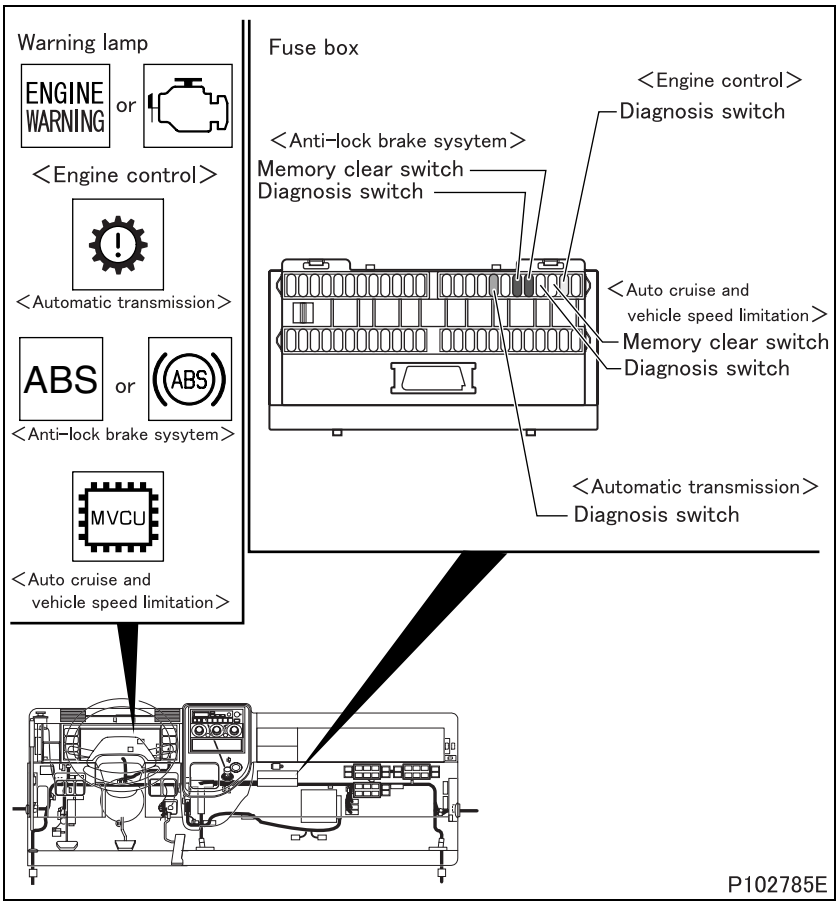

- Using the diagnosis and memory clear switches, display diagnosis codes.

CAUTION ⚠

- **Opening the memory clear switch followed by its reconnection will erase the stored diagnosis codes from the memory. To avoid inadvertently erasing necessary codes, be sure to read well the procedure described below before handling diagnosis codes. <Except engine control and automatic transmission>**

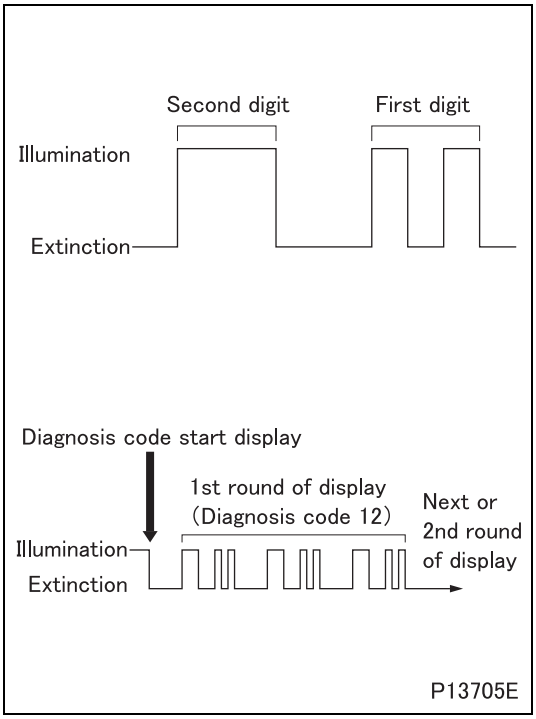

(1) Reading diagnosis codes by flashing of warning lamp

- To read a diagnosis code, observe how may times the warning lamp flashes and how long each illumination lasts.
- The duration of illumination differs between the first and second digits.
  - Second digit: 1.2 sec.
  - First digit: 0.4 sec.
- A diagnosis code consists of the flashing of second digit and the flashing of first digit in that order. If a diagnosis code has “0” in the second digit, only the first digit will be displayed.
- The diagnosis code 01 will be displayed if the system is normal.
- The same diagnosis code will be displayed 3 times in a row before moving to the display of the next code.
- After the last diagnosis code is displayed, the first code will be displayed again 3 times in a row and then the subsequent codes. This will be repeated.

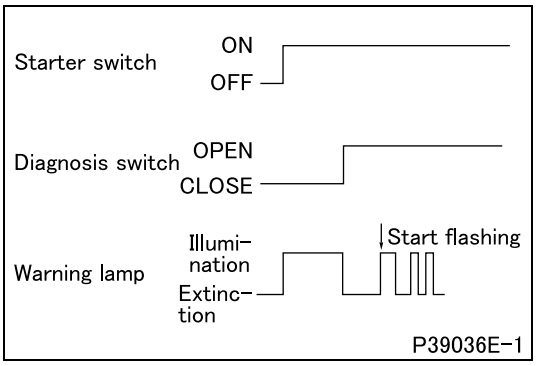

(2) Reading and erasing diagnosis codes
<Engine control and automatic transmission>

(2.1) Reading diagnosis codes

- Turn the starter switch ON.
- Remove the diagnosis switch.
- Diagnosis codes will be displayed by flashing of the warning lamp.
- When the diagnosis switch is connected, electronic control unit will stop (terminate) displaying diagnosis codes.

(2.2) Erasing diagnosis codes

- Erase diagnosis codes with a scanning tool (General Scanning Tool or Multi-Use Tester).

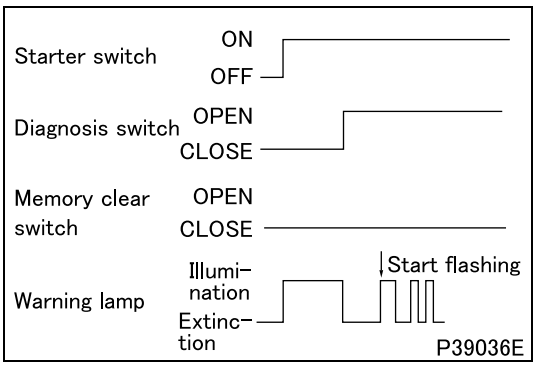

(3) Reading and erasing diagnosis codes
<Except engine control and automatic transmission>

(3.1) Present diagnosis codes

- Turn the starter switch ON.
- Remove the diagnosis switch.
- Present diagnosis codes will be displayed by flashing of the warning lamp.
- When the diagnosis switch is connected, electronic control unit will stop (terminate) displaying diagnosis codes.

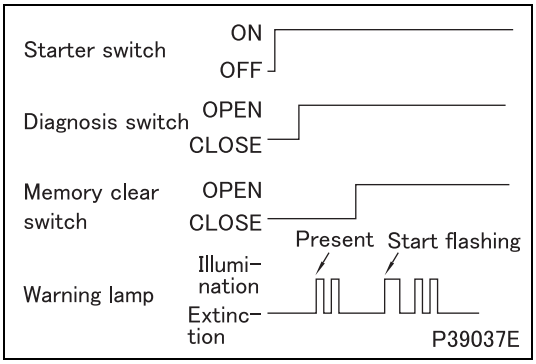

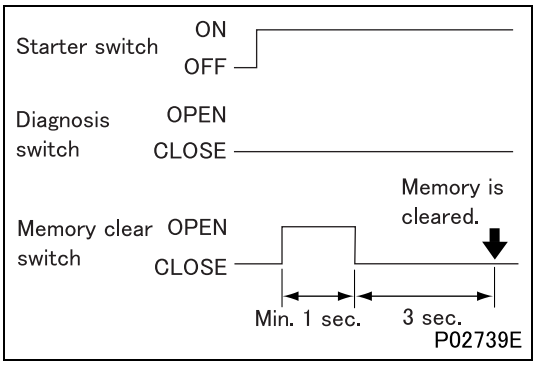

(3.2) Present and past diagnosis codes

- Turn the starter switch to the ON position.
- Open the diagnosis switch.
- Present diagnosis codes will be displayed by flashing of the warning lamp.
- Open the memory clear switch.
- Present and past diagnosis codes will be displayed by flashing of the warning lamp.
- Turn the starter switch to the OFF position and connect the memory clear switch and diagnosis switch to terminate the diagnosis code displaying mode.

(3.3) Erasing diagnosis codes

- Turn the starter switch to the ON position (do not start the engine).
- Open the memory clear switch and reconnect it; all diagnosis codes stored in electronic control unit memory will be erased.
  To cancel diagnosis code erasure after opening the memory clear switch, turn the starter switch to the OFF position and then reconnect the memory clear switch.

TABLE OF STANDARD TIGHTENING TORQUES

- Use specified bolts and nuts, tightening them to the torques specified in this section unless otherwise stated.
- Threaded portions and bearing surfaces should be dry.
- Where the property class differs between the nut and bolt (or stud bolt), use the tightening torque specified in the table for the bolt.

Hexagon Headed Bolt, Stud Bolt (Unit: N·m {ft.lbs, kgf·m})

Strength	4T		7T		8T	
Identification symbol / Nominal diameter	(Stud)		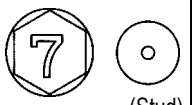 (Stud)		(Stud)	
M5	2 to 3 {1.5 to 2.2, 0.2 to 0.3}	–	4 to 6 {3.0 to 4.4, 0.4 to 0.6}	–	5 to 7 {3.7 to 5.2, 0.5 to 0.7}	–
M6	4 to 6 {3.0 to 4.4, 0.4 to 0.6}	–	7 to 10 {5.2 to 7.4, 0.7 to 1.0}	–	8 to 12 {5.9 to 8.9, 0.8 to 1.2}	–
M8	9 to 13 {6.6 to 9.6, 0.9 to 1.3}	–	16 to 24 {12 to 18, 1.7 to 2.5}	–	19 to 28 {14 to 21, 2.0 to 2.9}	–
M10	18 to 27 {13 to 20, 1.8 to 2.7}	17 to 25 {13 to 18, 1.8 to 2.6}	34 to 50 {25 to 37, 3.5 to 5.1}	32 to 48 {24 to 35, 3.3 to 4.9}	45 to 60 {33 to 44, 4.5 to 6.0}	37 to 55 {27 to 41, 3.8 to 5.7}
M12	34 to 50 {25 to 37, 3.4 to 5.1}	31 to 45 {23 to 33, 3.1 to 4.6}	70 to 90 {52 to 66, 7.0 to 9.5}	65 to 85 {48 to 63, 6.5 to 8.5}	80 to 105 {59 to 77, 8.5 to 11}	75 to 95 {55 to 70, 7.5 to 10}
M14	60 to 80 {44 to 59, 6.0 to 8.0}	55 to 75 {41 to 55, 5.5 to 7.5}	110 to 150 {81 to 110, 11 to 15}	100 to 140 {74 to 105, 11 to 14}	130 to 170 {96 to 125, 13 to 17}	120 to 160 {89 to 120, 12 to 16}
M16	90 to 120 {66 to 89, 9 to 12}	90 to 110 {66 to 81, 9 to 11}	170 to 220 {125 to 160, 17 to 23}	160 to 210 {120 to 155, 16 to 21}	200 to 260 {145 to 190, 20 to 27}	190 to 240 {140 to 175, 19 to 25}
M18	130 to 170 {96 to 125, 14 to 18}	120 to 150 {89 to 110, 12 to 16}	250 to 330 {185 to 245, 25 to 33}	220 to 290 {160 to 215, 23 to 30}	290 to 380 {215 to 280, 30 to 39}	250 to 340 {185 to 250, 26 to 35}
M20	180 to 240 {130 to 175, 19 to 25}	170 to 220 {125 to 160, 17 to 22}	340 to 460 {250 to 340, 35 to 47}	310 to 410 {230 to 300, 32 to 42}	400 to 530 {295 to 390, 41 to 55}	360 to 480 {265 to 355, 37 to 49}
M22	250 to 330 {185 to 245, 25 to 33}	230 to 300 {170 to 220, 23 to 30}	460 to 620 {340 to 455, 47 to 63}	420 to 560 {310 to 415, 43 to 57}	540 to 720 {400 to 530, 55 to 73}	490 to 650 {360 to 480, 50 to 67}
M24	320 to 430 {235 to 315, 33 to 44}	290 to 380 {215 to 280, 29 to 39}	600 to 810 {440 to 595, 62 to 83}	540 to 720 {400 to 530, 55 to 73}	700 to 940 {515 to 695, 72 to 96}	620 to 830 {455 to 610, 63 to 85}

Hexagon Headed Flange Bolt (Unit: N·m {ft.lbs, kgf·m})

Strength	4T		7T		8T	
Identification symbol / Nominal diameter		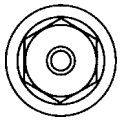		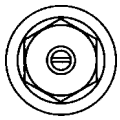		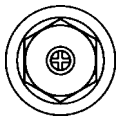
M6	4 to 6 {3.0 to 4.4, 0.4 to 0.6}	–	8 to 12 {5.9 to 8.9, 0.8 to 1.2}	–	10 to 14 {7.4 to 10, 1.0 to 1.4}	–
M8	10 to 15 {7.4 to 11, 1.0 to 1.5}	–	19 to 28 {14 to 21, 2.0 to 2.9}	–	22 to 33 {16 to 24, 2.3 to 3.3}	–
M10	21 to 31 {15 to 23, 2.1 to 3.1}	20 to 29 {15 to 21, 2.0 to 3.0}	45 to 55 {33 to 41, 4.5 to 5.5}	37 to 54 {27 to 40, 3.8 to 5.6}	50 to 65 {37 to 48, 5.0 to 6.5}	50 to 60 {37 to 44, 5.0 to 6.5}
M12	38 to 56 {28 to 41, 3.8 to 5.5}	35 to 51 {26 to 38, 3.5 to 5.2}	80 to 105 {59 to 77, 8.0 to 10.5}	70 to 95 {52 to 95, 7.5 to 9.5}	90 to 120 {66 to 89, 9 to 12}	85 to 110 {63 to 81, 8.5 to 11}

Hexagon Nuts (Unit: N·m {ft.lbs, kgf·m})

Strength	4T		6T	
Identification symbol			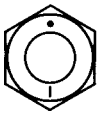	
Nominal diameter	Standard screw thread	Coarse screw thread	Standard screw thread	Coarse screw thread
M5	2 to 3 {1.5 to 2.2, 0.2 to 0.3}	–	4 to 6 {3.0 to 4.4, 0.4 to 0.6}	–
M6	4 to 6 {3.0 to 4.4, 0.4 to 0.6}	–	7 to 10 {5.2 to 7.4, 0.7 to 1.0}	–
M8	9 to 13 {6.6 to 9.6, 0.9 to 1.3}	–	16 to 24 {12 to 18, 1.7 to 2.5}	–
M10	18 to 27 {13 to 20, 1.8 to 2.7}	17 to 25 {13 to 18, 1.8 to 2.6}	34 to 50 {25 to 37, 3.5 to 5.1}	32 to 48 {24 to 35, 3.3 to 4.9}
M12	34 to 50 {25 to 37, 3.4 to 5.1}	31 to 45 {23 to 33, 3.1 to 4.6}	70 to 90 {52 to 66, 7.0 to 9.5}	65 to 85 {48 to 63, 6.5 to 8.5}
M14	60 to 80 {44 to 59, 6.0 to 8.0}	55 to 75 {41 to 55, 5.5 to 7.5}	110 to 150 {81 to 110, 11 to 15}	100 to 140 {74 to 105, 11 to 14}
M16	90 to 120 {66 to 89, 9 to 12}	90 to 110 {66 to 81, 9 to 11}	170 to 220 {125 to 160, 17 to 23}	160 to 210 {120 to 155, 16 to 21}
M18	130 to 170 {96 to 125, 14 to 18}	120 to 150 {89 to 110, 12 to 16}	250 to 330 {185 to 245, 25 to 33}	220 to 290 {160 to 215, 23 to 30}
M20	180 to 240 {130 to 175, 19 to 25}	170 to 220 {125 to 160, 17 to 22}	340 to 460 {250 to 340, 35 to 47}	310 to 410 {230 to 300, 32 to 42}
M22	250 to 330 {185 to 245, 25 to 33}	230 to 300 {170 to 220, 23 to 30}	460 to 620 {340 to 455, 47 to 63}	420 to 560 {310 to 415, 43 to 57}
M24	320 to 430 {235 to 315, 33 to 44}	290 to 380 {215 to 280, 29 to 39}	600 to 810 {440 to 595, 62 to 83}	540 to 720 {400 to 530, 55 to 73}

Hexagon Flange Nuts (Unit: N·m {ft.lbs, kgf·m})

Strength	4T	
Identification symbol	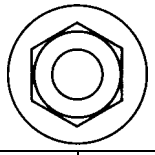	
Nominal diameter	Standard screw thread	Coarse screw thread
M6	4 to 6 {3.0 to 4.4, 0.4 to 0.6}	–
M8	10 to 15 {7.4 to 11, 1.0 to 1.5}	–
M10	21 to 31 {15 to 23, 2.1 to 3.1}	20 to 29 {15 to 21, 2.0 to 3.0}
M12	38 to 56 {28 to 41, 3.8 to 5.6}	35 to 51 {26 to 38, 3.5 to 5.2}

TABLE OF STANDARD TIGHTENING TORQUES

Tightening Torque for General-Purpose Flare Nut (Unit: N·m {ft.lbs, kgf·m})

Pipe diameter	ϕ4.76 mm {0.19 in.}	ϕ6.35 mm {0.25 in.}	ϕ8 mm {0.31 in.}	ϕ10 mm {0.39 in.}	ϕ12 mm {0.47 in.}	ϕ15 mm {0.59 in.}
Tightening torque	17 {13, 1.7}	25 {18, 2.6}	39 {29, 4.0}	59 {44, 6.0}	88 {65, 9.0}	98 {72, 10}

Tightening Torque for General-Purpose Air Piping Nylon Tube (DIN Type) (Unit: N·m {ft.lbs, kgf·m})

Nominal diameter × wall thickness	6 × 1 mm {0.24 × 0.039 in.}	10 × 1.25 mm {0.39 × 0.049 in.}	12 × 1.5 mm {0.47 × 0.059 in.}	15 × 1.5 mm {0.59 × 0.059 in.}
Tightening torque	20^{+6}_{0} {$15^{+4.4}_{0}$ $2.0^{+0.6}_{0}$}	34^{+10}_{0} {$25^{+7.4}_{0}$ $3.5^{+1.0}_{0}$}	49^{+10}_{0} {$36^{+7.4}_{0}$ $5.0^{+1.0}_{0}$}	54^{+5}_{0} {$40^{+3.7}_{0}$ $5.5^{+0.5}_{0}$}

Tightening Torque for General-Purpose Air Piping Nylon Tube (SAE Type) (Unit: N·m {ft.lbs, kgf·m})

Nominal diameter	1/4 in.	3/8 in.	1/2 in.	5/8 in.
Tightening torque	13^{+4}_{0} {$9.6^{+3.0}_{0}$ $1.3^{+0.4}_{0}$}	29^{+5}_{0} {$21^{+3.7}_{0}$ $3.0^{+0.5}_{0}$}	49^{+5}_{0} {$36^{+3.7}_{0}$ $5.0^{+0.5}_{0}$}	64^{+5}_{0} {$47^{+3.7}_{0}$ $6.5^{+0.5}_{0}$}

Group 01

Maintenance Schedule

Table of Contents

Back

Home

MITSUBISHI FUSO TRUCK OF AMERICA, Inc.

Pub.No.TWSE0805-01

INDEX

HOW TO READ THE MAINTENANCE SCHEDULE TABLES 01-2

MAINTENANCE SCHEDULE TABLES 01-4

MAINTENANCE OPERATIONS 01-8

LUBRICATION TABLES 01-14

LUBRICATION 01-16

HOW TO READ THE MAINTENANCE SCHEDULE TABLES

Example Table:

Ⓔ: Exhaust emission items.
Ⓝ: Noise control items.

Item (1)	Time of inspection and maintenance (2)									Working procedures (3)	Reference Gr (4)
			Inspection interval								
	Pre-operational checks	New vehicle at 4,000 km/ 2,500 miles	Every 10,000 km/ 6,000 miles	Every 20,000 km/ 12,000 miles	Every 30,000 km/ 18,000 miles	Every 40,000 km/ 24,000 miles	Every 50,000 km/ 30,000 miles	Every 90,000 km/ 54,000 miles	Every 250,000 km/ 150 ,000 miles		
ENGINE											
Fuel, oil, or coolant leaks from engine	×									Check engine for fuel, oil and coolant leaks.	Gr11, 12 13A, 14
ⒺⓃ Engine conditions	×									Check the engine for smooth starting and quiet running.	Gr11, 13 15, 17, 54
Manifold bolts and nuts torque							×			Check inlet exhaust manifold dolts and nuts for looseness.	Gr15
Ⓔ Check and adjust valve clearance		×					×			Check valve clearance with thickness gauge.	Gr11
Ⓔ Oil filter replacement			Every 10,000 km/6,000 miles or 12 months							Replace oil filters	Gr12

(1) This column contains the maintenance and inspection items.

(2) The periods between inspection and service are based on the assumption that the vehicle will be driven approximately 60,000 kilometers (36,000 miles) per year.
Inspections which must be made are indicated by an "×" or by the appropriate period between servicing.

(3) This column provides a simplified explanation of the operational procedures involved for each inspection or maintenance item.

(4) The Gr. No. refers to the "group number" in this Service Manual. For visual checks and simple inspections, see the sections labelled "Working Procedures".

M E M O

MAINTENANCE SCHEDULE TABLES

Ⓔ: Exhaust emission items.
Ⓝ: Noise control items.

Item	Time of inspection and maintenance									Working procedures	Reference Gr
			Inspection interval								
	Pre-operational checks	New vehicle at 4,000 km/ 2,500 miles	Every 10,000 km/ 6,000 miles	Every 20,000 km/ 12,000 miles	Every 30,000 km/ 18,000 miles	Every 40,000 km/ 24,000 miles	Every 50,000 km/ 30,000 miles	Every 90,000 km/ 54,000 miles	Every 250,000 km/ 150,000 miles		
ENGINE											
Leakage of coolant, fuel and oil	×									Check the underneath of the vehicle for any sign of leakage.	Gr11, 12, 13A, 14
ⒺⓃ Engine conditions	×									Check the engine for smooth starting and quiet running.	Gr11, 13, 15, 17, 54
Manifold bolts and nuts torque							×			Check inlet exhaust manifold bolts and nuts for looseness.	Gr15
Ⓔ Check and adjust valve clearance		×					×			Check valve clearance with feeler gauge.	Gr11
Ⓔ Oil filter replacement			Every 10,000 km/6,000 miles or 12 months							Replace oil filters.	Gr12
Ⓔ Fuel filter replacement			Every 20,000 km/12,000 miles or 12 months							Replace fuel filter.	Gr13A
Ⓔ Fuel line			Every 20,000 km/12,000 miles or 12 months							Inspect the fuel tank, cap and lines for damage causing leakage.	Gr13A
ⒺⓃ Belts tension and damage	×		Every 10,000 km/6,000 miles or 12 months							Inspect belts for crack, wear and tension.	Gr14
Ⓔ Cooling system				×						Check radiator and pressure cap for sealing performance and mounting condition. Inspect hoses for looseness, deterioration, damage causing leakage. Remove dust and foreign matter deposit from radiator and intercooler front.	Gr14
Coolant level	×									Check that the coolant level is between the “FULL” and “LOW” marks on the reservoir tank.	Gr14
Coolant replacement			Every 24 months							Replace coolant.	Gr14
Ⓔ Turbocharger rotor play									×	Check turbocharger rotor play.	Gr15
Air cleaner element			Every 5,000 km/3,000 miles							Clean air cleaner element by blowing clean compressed air.	Gr15
ⒺⓃ Air cleaner element replacement						×				Replace air cleaner element.	Gr15
ⒺⓃ Exhaust system				×						Inspect the exhaust system for damage, corrosion and loose connection causing leakage.	Gr15
Ⓔ DPF			Every 10,000 km/6,000 miles or 12 months							Check DPF for blocking.	Gr15
			First 185,000 km/110,000 miles thereafter every 105,000 km/65,000 miles							DPF ash cleaning	

Item	Time of inspection and maintenance									Working procedures	Reference Gr
			Inspection interval								
	Pre-operational checks	New vehicle at 4,000 km/ 2,500 miles	Every 10,000 km/ 6,000 miles	Every 20,000 km/ 12,000 miles	Every 30,000 km/ 18,000 miles	Every 40,000 km/ 24,000 miles	Every 50,000 km/ 30,000 miles	Every 90,000 km/ 54,000 miles	Every 250,000 km/ 150,000 miles		
Ⓔ Throttle valve							×			Clean dirt and deposit from the inside of the valve.	Gr17
Ⓔ EGR valve							×			Clean dirt and deposit from the inside of the valve.	Gr17
Ⓔ Exhaust brake							×			Check for normal operation.	Gr15
POWER TRAIN											
Clutch pedal play	×									Check the clutch pedal for play.	Gr21
Clutch pedal and clutch disc wear			×							Check the pedal for free play. Check clutch disc wear.	Gr21
Range selector lever	×		Every 30,000 km/18,000 miles or 6 months							Check the operate performance of range selector lever	Gr23
Propeller shaft flange torque and universal joint looseness		×	×							Check flange yoke bolts for looseness and universal joint for play.	Gr25
Propeller shaft center bearing							×			Check center bearing if trace of grease flowing out is evident. Check center bearing for wear, damage and play.	Gr25
FRONT AND REAR AXLE											
Wheel hub bearing					×					Check wheel hub bearing for play.	Gr26, 27
Wheel hub bearing hub seals replacement					×					When wheel hub bearing grease is replaced, also replace the wheel hub bearing hub seals.	Gr26, 27
Wheel and tire	×		×							Check disc wheel for corrosion, deformation and cracks. Measure inflation pressure with tire gauge. Check tire tread and side wall for cracks and damage. Measure tire tread groove depth to make sure it is deep enough. Check tire tread for uneven wear, stepped wear and other abnormal wear.	See later section.
			×							Rotate all tires.	
Retightening wheel nuts		×	×							Check wheel nuts for looseness. Check at the first 50 to 100 km/30 to 60 miles after changing a wheel.	See later section.
SUSPENSION SYSTEM											
Suspension springs	×									Check for broken springs and tilt of vehicle body toward either side.	Gr33, 34

Item	Time of inspection and maintenance									Working procedures	Reference Gr
			Inspection interval								
	Pre-operational checks	New vehicle at 4,000 km/ 2,500 miles	Every 10,000 km/ 6,000 miles	Every 20,000 km/ 12,000 miles	Every 30,000 km/ 18,000 miles	Every 40,000 km/ 24,000 miles	Every 50,000 km/ 30,000 miles	Every 90,000 km/ 54,000 miles	Every 250,000 km/ 150,000 miles		
Retightening U-bolts		×		×						Check U-bolt nuts for looseness. Check at the first 1,000 km/600 miles after removing and retightening U-bolt nuts. Do not reuse the removed nuts. <FE 85 (front suspension)>	Gr33, 34
BRAKING SYSTEM											
Service brake pedal	×									Check brake pedal play and stroke.	Gr35A
Brake performance	×									Press the brake pedal and check that the brakes work effectively and evenly on all wheels.	Gr35A
Disc brake pad and disc			×							Check disc brake pad and disc for damage and wear.	Gr35A
Brake lining			×							Check lining for wear through inspection hole.	Gr35A
Brake drum					×					Disassemble and check drum for wear, crack and damage.	
Parking brake lever stroke	×									Check parking brake lever stroke.	Gr36
Looseness, play and damage of brake system parts			×							Inspect brake lines and hoses looseness, play and damage. Inspect wheel cylinder and brake master cylinder for looseness, play and damage.	Gr35A
STEERING SYSTEM											
Steering wheel play	×									Turn steering wheel right and left to measure play at steering wheel rim. Measure while engine is running.	Gr37
Steering wheel operation	×									Check that the steering wheel does not vibrate or pull to one side and that it is not unduly heavy. Also make sure that the steering wheel returns to its neutral position smoothly.	Gr37
Steering system			×							Check steering system for looseness, steering wheel play and operating condition. Inspect for oil leaks, booster and oil pump function.	Gr37
Drag link ball joint dust cover					×					Check the dust cover for wear, cracks and other damage.	Gr37
CAB											
Defroster	×									Make sure that warm air blows properly onto the windshield.	Gr55

Item	Time of inspection and maintenance									Working procedures	Reference Gr
			Inspection interval								
	Pre-operational checks	New vehicle at 4,000 km/ 2,500 miles	Every 10,000 km/ 6,000 miles	Every 20,000 km/ 12,000 miles	Every 30,000 km/ 18,000 miles	Every 40,000 km/ 24,000 miles	Every 50,000 km/ 30,000 miles	Every 90,000 km/ 54,000 miles	Every 250,000 km/ 150,000 miles		
Rearview mirrors	×									Seated in the driver's seat, adjust the angles for clear views of the sides and rear. Make sure the mirrors are clean.	Gr51
License plate and reflector condition	×									Check the license plate and reflectors for loose installation, damage, and dirt.	–
Door locks	×									Push down the lock knob and verify that the door does not open even when the inner handle is operated.	Gr43
Seat belts	×									Confirm that the seat belt buckles function correctly when fastening and unfastening.	Gr52
ELECTRICAL SYSTEM											
Horn operation	×									Press the horn button to check that the horn is working properly.	Gr54
Windshield washer fluid level	×									Confirm that the windshield washer fluid level is above the bottom of the inspection window.	–
Windshield wiper and washer operation	×									Check the washer for proper fluid spray direction and the wipers for normal action.	Gr51, 54
Lighting system	×									Make sure that each lamp lights up or flashes properly. Check lamp lenses for dirt and damage.	Gr54
Gauge, warning/indicator lamp operation	×									Check that gauges, warning lamps and indicators are working properly.	Gr54
Battery	×									Check the battery fluid level.	Gr54

Tire

Service standards (Unit: mm {in.})

Location	Maintenance item	Standard value	Limit	Remedy
–	Depth of tire tread grooves	–	1.6 {0.063}	Replace

Tightening torque (Unit: N·m {ft.lbs, kgf·m})

Mark	Parts to be tightened	Tightening torque	Remarks
–	Wheel nut	490 ± 49 {360 ± 36, 50 ± 5}	–

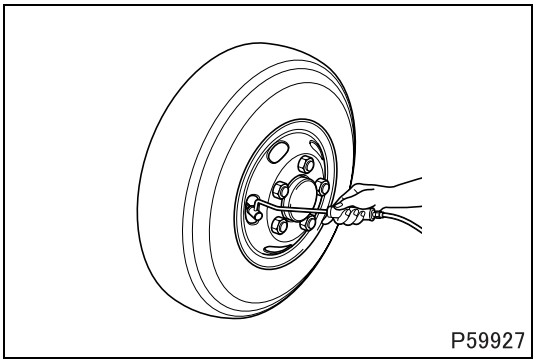
P59927

Air pressure

Tire air pressure should be checked before the vehicle is driven, while the tires are still cool.

Item / Vehicle model	Tire size	Air pressure kPa {psi, kgf/cm^2}
FE83, FE84	LT215/85R16-10PR (load range E)	550 {80, 5.5}
FE85	215/75R17.5 124/123L (load range F)	690 {100, 7.0}
FG	LT235/85R16-10PR (load range E)	550 {80, 5.5}

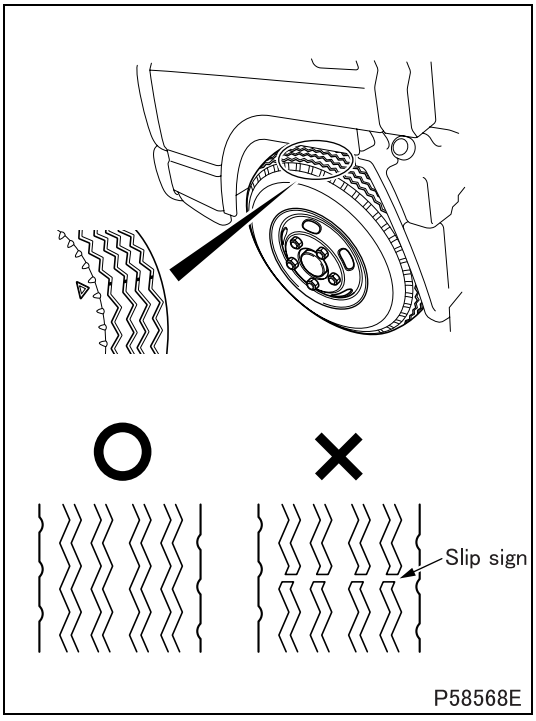

P58568E

CAUTION ⚠

- **Make certain that there is no difference in the air pressure between the inner and outer rear tires.**
- **Make certain you use valve caps on the air valves.**
- **It is not necessary to increase the air pressure for high-speed driving.**

Checking tread depth

- Check all around the tire treads to make sure that the depth of the tread grooves is above the wear limit.
- If the tread grooves are not deep enough, slip sign appears at the position of the ⚠ mark, where the tread groove has worn away.

WARNING ⚠

- **If the depth of the tread grooves is not adequate, the tires will slip on wet roads and present a hazard. Such tires are also extremely dangerous because they are more susceptible to hydroplaning when the vehicle is running at high speeds in the rain. Such tires must be replaced with new ones as soon as possible.**

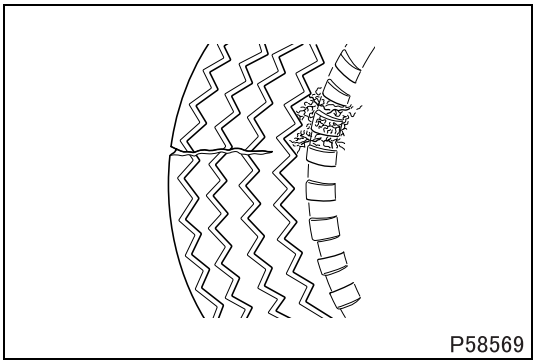
P58569

Checking for cracks, damage, and objects embedded in the treads

- Check the tire treads and walls for cracks and damage.
- Check tire treads for uneven wear or other abnormal wear.
- Check if metal objects or nails have penetrated the tires.
- Check for stones embedded between double tires.

WARNING ⚠

- **Badly damaged or worn tires are extremely dangerous, because they can be punctured more easily when the vehicle is running, they must be replaced with new ones as soon as possible.**

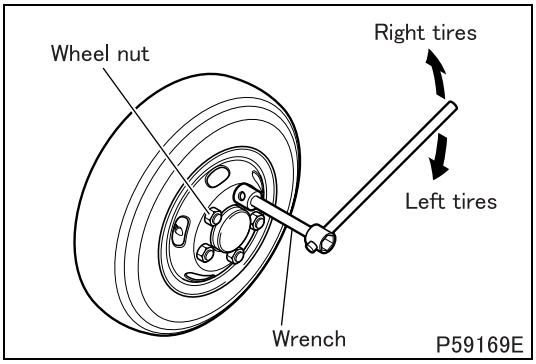

Removing tires

- Loosen wheel nuts slightly. The wheel nuts for right tires have right-hand threads “R”, and the wheel nuts for left tires have left-hand threads “L”.

WARNING ⚠

- **Make certain that wheel nut wrench is fully engaged, all the way to the back of nuts. If it is not, it could slip.**

CAUTION ⚠

- **Only loosen wheel nuts slightly. Do not remove them.**

- Jack up the vehicle carefully, until the tire is slightly off the ground.
  Remove wheel nuts, then remove the tire.
- When working on the double tires at the rear of the vehicle, first remove the outside tire, then lower the vehicle and loosen the nuts on the inside tire. After doing this, jack the vehicle back up and remove the tire.

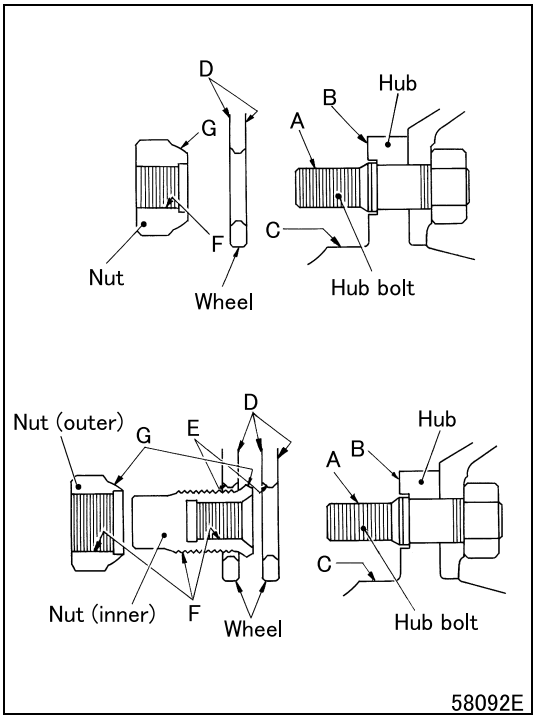

Mounting tires

To prevent wheel nuts and hub bolt from becoming loose and to prevent mounted parts (tire assemblies and hub) from being damaged, remove rust, dust, additional coatings of paint, and foreign particles from the following areas:

A: Hub bolt thread area
B: Wheel mounting surface of hub
C: Wheel alignment area of hub
D: Disc wheel mating surface
E: Disc wheel nut mounting surface
F: Wheel nut thread area
G: Wheel nut spherical area

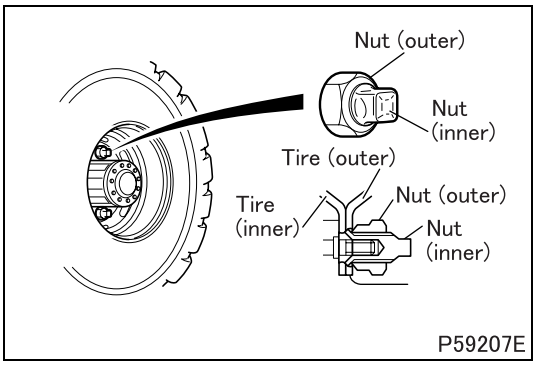

- Install the dual rear tires as follows:
  - After mounting inner tire and fully tightening inner wheel nuts, jack the vehicle up and mount on outer tire, then tighten outer wheel nuts.
  - Even if only outside tire is to be changed, do not mount it until inner wheel nuts have been fastened at the specified torque.
  - Slide the air valves on the inside and outside tires down when mounting the tires.

WARNING ⚠

- **If the threads are scored, or the disc wheel is deformed or cracked, change bolts, nuts and disc. Driving the truck before correcting such problems can cause the tire in question to come loose, which could be the source of major accidents.**

CAUTION ⚠

- **Check hub bolt threads carefully for damage before putting the tire on.**

- Place the tapered end of wheel nuts towards the disc wheel and fasten temporarily. Center so that there is no eccentricity between bolts and the disc wheel bolt holes.
- Lower the vehicle.

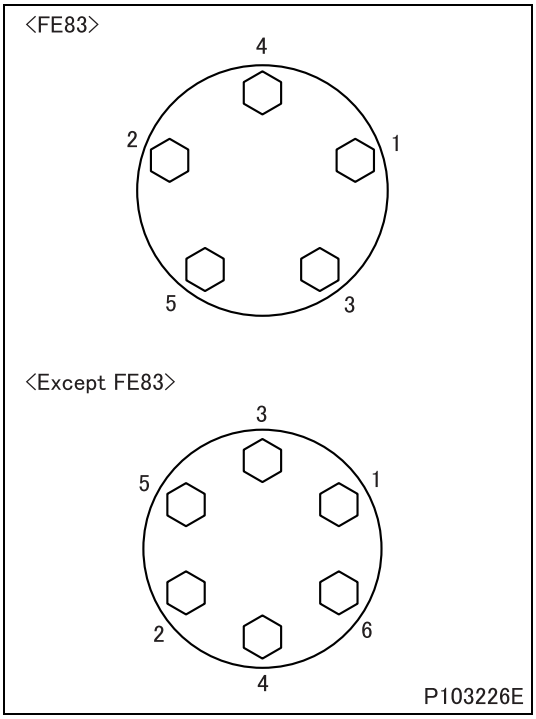

- Tighten the nuts in the order as illustrated, tightening each nut two or three times. To finish, tighten each nut at the specified torque.

WARNING ⚠

- **Always use the specified torque when tightening the wheel nuts. If the wheel nuts are not tightened properly, the wheels could come loose while the vehicle is being driven, which could result in life threatening accidents or the truck being disabled.**
- **Do not coat the threads with grease when tightening the nuts. This could result in over-tightening force, which could be dangerous.**

CAUTION ⚠

- **Over-tightening the wheel nuts can damage them.**

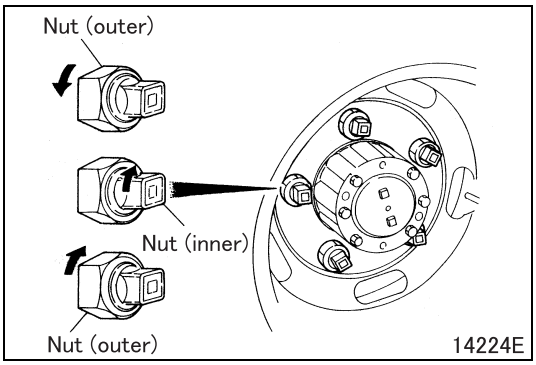

Checking the wheel nuts for looseness

The wheel nuts should be checked for looseness every 10,000 km (6,000 miles). All nuts should be tightened at the specified torque.

- Check the double rear tires for looseness as follows:

(1) Loosen outer wheel nuts.
(2) Tighten inner wheel nuts at specified torque.
(3) Tighten outer wheel nuts at specified torque.

CAUTION ⚠

- **If outer wheel nuts are tightened without first being loosened, it might not be possible to tighten them at the specified torque.**

Tire rotation

Tires wear differently, according to the location where they are mounted. To make this wear uniform and prolong the life of your tires, they should be rotated every 10,000 km (6,000 miles) in the rotation order shown below:

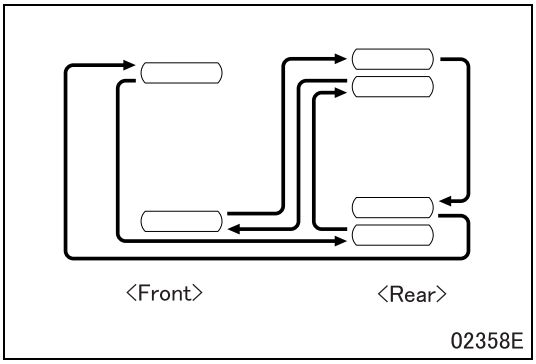

- When the tread patterns for all tires are identical:

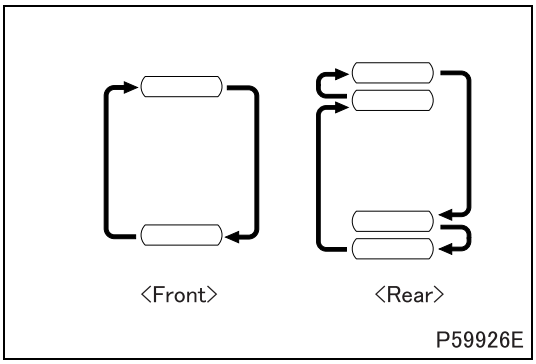

- When the tread patterns are different for the front and rear tires:

CAUTION ⚠

- **Always adjust air pressure after running-in new tires.**
- **When using tires of different tread patterns, use rib-type patterns for the front tires and traction type patterns for the rear tires.**
- **Avoid using both radial and biased tires on the same vehicle.**

M E M O

LUBRICATION TABLES

Ⓔ: Exhaust emission items.

Items	Time of inspection and maintenance							Lubricant specifications	Reference Gr
			Inspection interval						
	Pre-operational checks	New vehicle at 4,000 km/ 2,500 miles	Every 10,000 km/ 6,000 miles	Every 20,000 km/ 12,000 miles	Every 30,000 km/ 18,000 miles	Every 40,000 km/ 24,000 miles	Every 50,000 km/ 30,000 miles		
Ⓔ Engine oil contamination and oil level	×							Engine oil API classification, CJ-4 Over 30°C {86°F} SAE 40 Over –15°C {5°F} SAE 15W-40 Below 0°C {32°F} SAE 10W-30	Gr12
Ⓔ Engine oil replacement		×	×						
Manual transmission oil level			×					Engine oil Vehicle operated continuously at high speed API classification CC SAE 30 or SAE 40 Gear oil API classification GL-3 SAE 80 (general) GL-3 SAE 90 (warm region) GL-4 SAE 90 (tropical region)	Gr22
Manual transmission oil replacement		×			×				
Automatic transmission fluid level			×					Mobil ATF3309 manufactured by Exxon Mobil	Gr23
Automatic transmission fluid replacement						×			
Transfer gear oil level <FG model only>			×					Gear oil API classification GL-3 SAE 80 (general) GL-3 SAE 90 (warm region) GL-4 SAE 90 (tropical region)	Gr24
Transfer gear oil replacement <FG model only>		×			×				
Rear axle housing gear oil level			×					Gear oil API classification GL-5 Below 40°C {104°F} SAE 90 Over 40°C {104°F} SAE 140 Use SAE 140 when operating vehicle at high load, such as continuous ascent on slopes and when the outside temperature is 10°C {50°F} or more <Limited slip defferential only> Limited slip differential oil API classification GL-5 SAE 90	Gr27
Rear axle housing gear oil replacement		×			×				
Front axle housing gear oil level <FG model only>			×					Gear oil API classification GL-5 Below 40°C {104°F} SAE 90 Over 40°C {104°F} SAE 140 Use SAE 140 when operating vehicle at high load, such as continuous ascent on slopes and when the outside temperature is 10°C {50°F} or more	Gr26B
Front axle housing gear oil replacement <FG model only>		×			×				
Hub bearing grease replacement					×			Wheel bearing grease [NLGI No. 2 (Li soap)]	Gr26, 27
Front axle birfield joint grease replacement <FG model only>					×			Wheel bearing grease [NLGI No. 2 (Li soap)]	Gr26B
Front axle kingpin bearing grease replacement <FG model only>					×			Wheel bearing grease [NLGI No. 2 (Li soap)]	Gr26B
Front axle steering knuckle grease replacement <FG model only>					×			Wheel bearing grease [NLGI No. 2 (Li soap)]	Gr26B
Brake reservoir tank fluid level	×							Brake fluid <SAE J1703f or FMVSS No. 116 DOT3>	Gr21, 35A
Brake fluid replacement							×		
Power steering fluid level			×					Automatic transmission fluid <DEXRON, DEXRON II or DEXRON III type>	Gr37
Power steering fluid replacement			Every 50,000 km/30,000 miles or 12 months						

Items		Time of inspection and maintenance							Lubricant specifications	Reference Gr
				Inspection interval						
		Pre-operational checks	New vehicle at 4,000 km/ 2,500 miles	Every 10,000 km/ 6,000 miles	Every 20,000 km/ 12,000 miles	Every 30,000 km/ 18,000 miles	Every 40,000 km/ 24,000 miles	Every 50,000 km/ 30,000 miles		
Lubrication of propeller shaft	Center bearing							×	Bearing grease [NLGI No. 3 (Li soap)]	Gr25
	Universal joint, slip joint			×					Wheel bearing grease [NLGI No. 2 (Li soap)]	See later section.
	Double Cardan joint <FG model only>			×						
Lubrication of rear suspension spring pin				×					Chassis grease [NLGI No. 1 (Li soap)]	See later section.
Lubrication of kingpins				×					Wheel bearing grease [NLGI No. 2 (Li soap)]	See later section.
Lubrication of door hinge				×					Chassis grease [NLGI No. 1 (Li soap)]	Gr43
Lubrication of anchor hook <Except crew cab>				×					Chassis grease [NLGI No. 1 (Li soap)]	Gr42

Greasing Various Areas of Chassis

Carefully clean away all dust and dirt from the grease nipples, and use the specified type of grease. The areas to be greased are shown in the following illustration.

<FE>

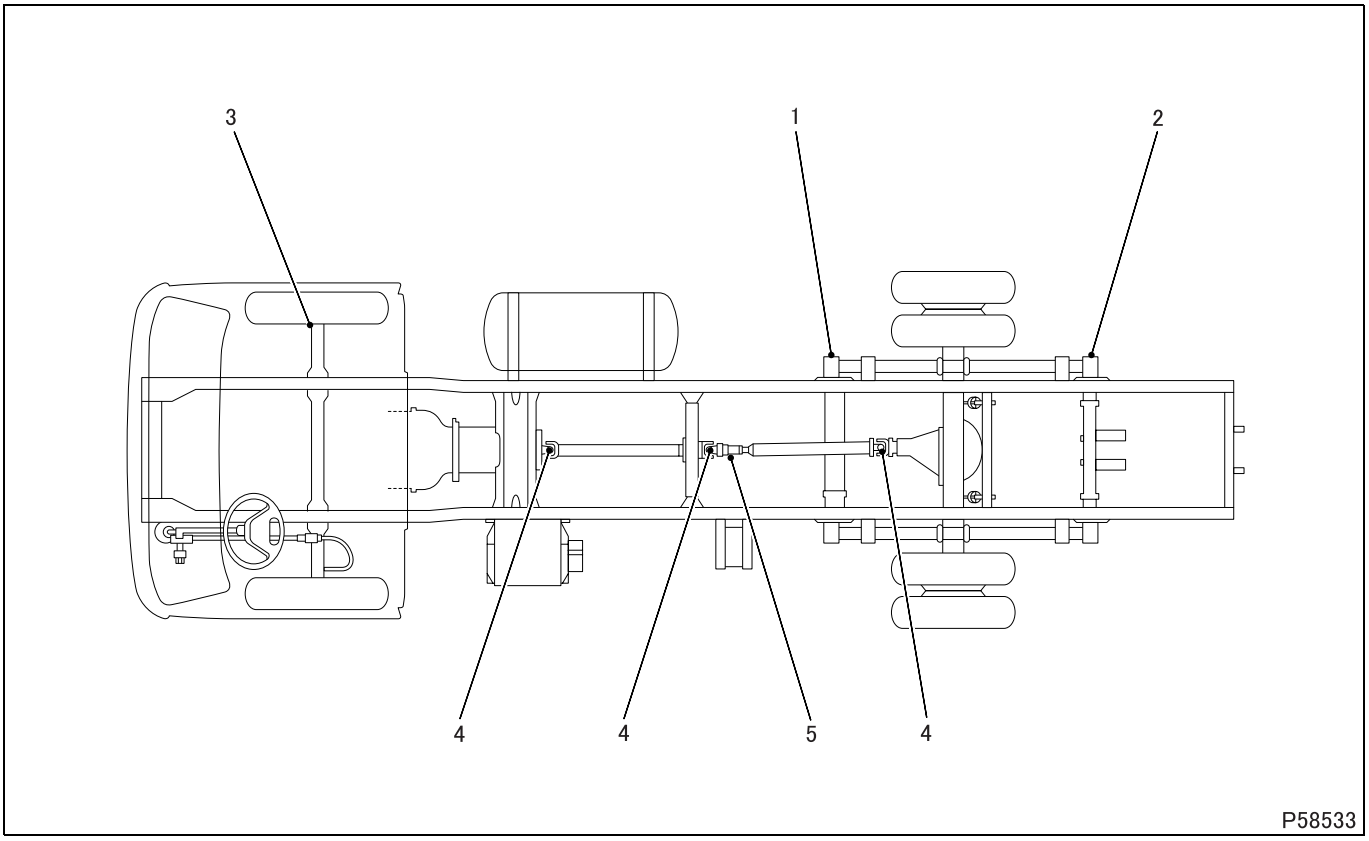

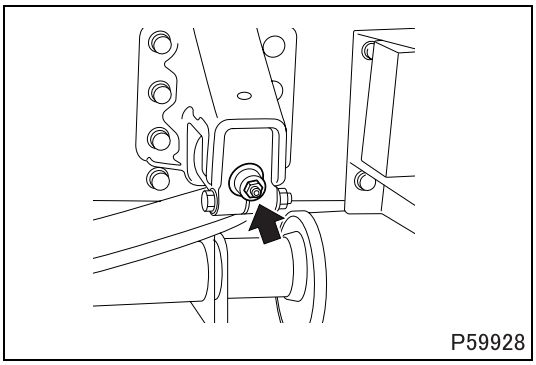

1. Rear spring pin front (left and right, 2 points)

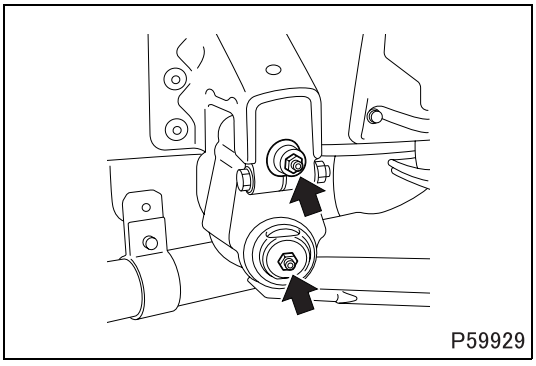

2. Rear spring pin rear (left and right, 4 points)

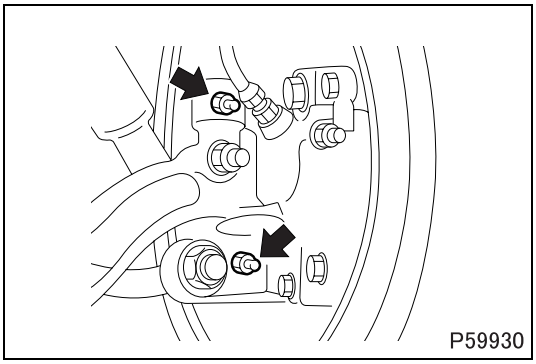

3. Kingpin bearing (left and right, 4 points)

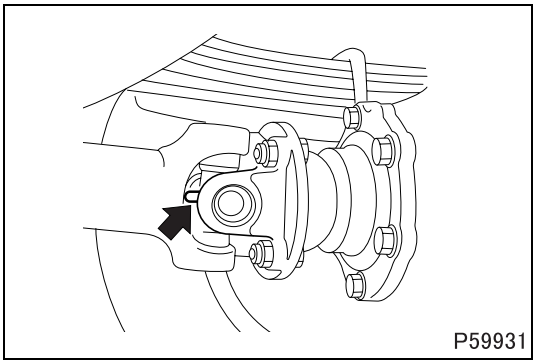

4. Propeller shaft universal joint's-all

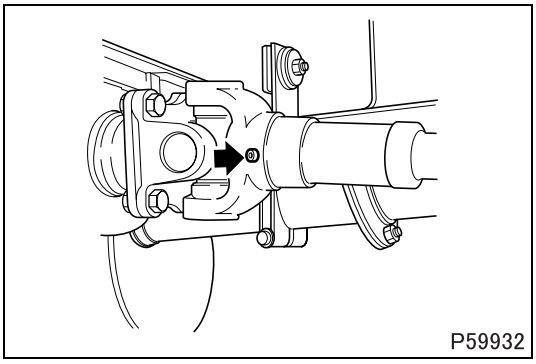

5. Propeller shaft slip joint

<FG>

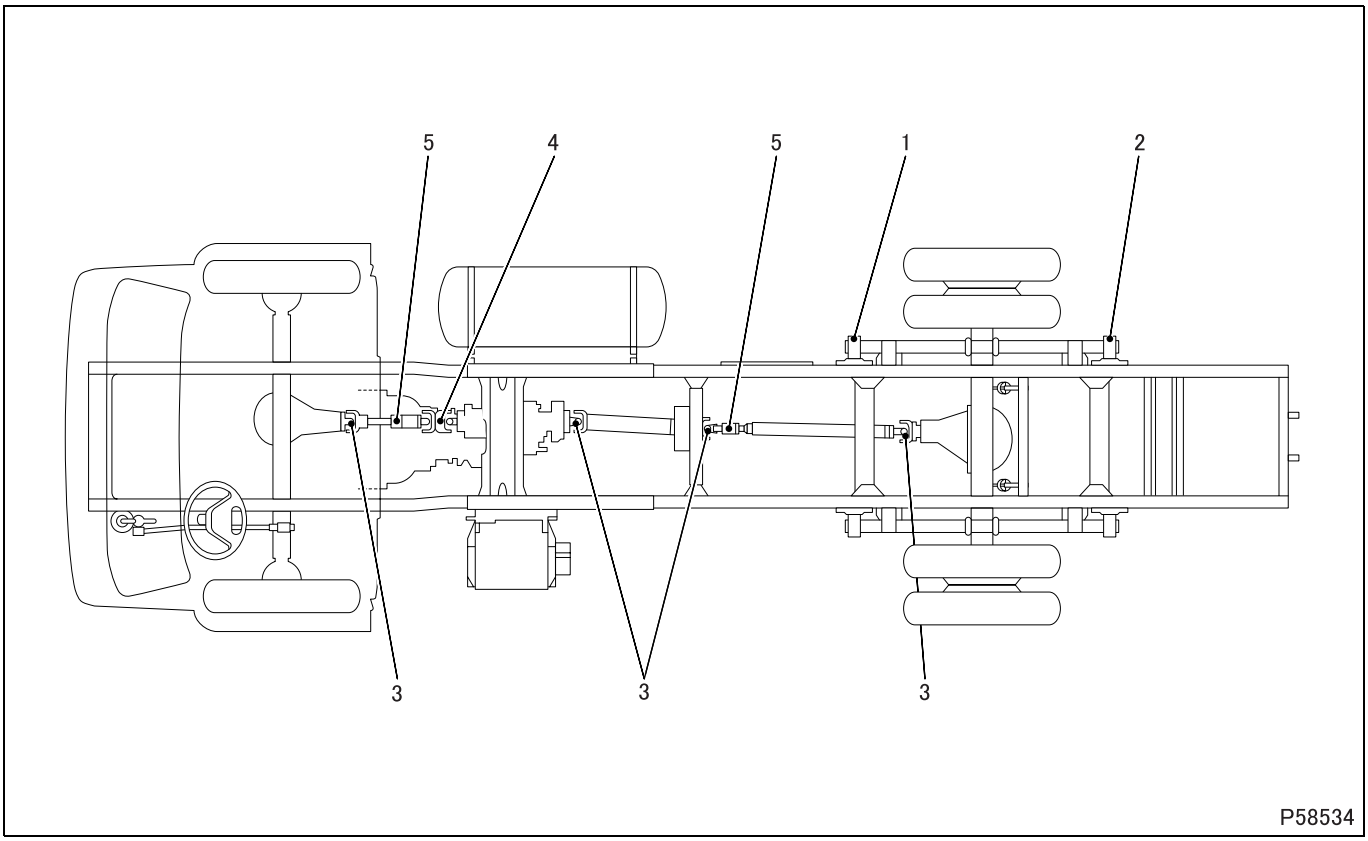

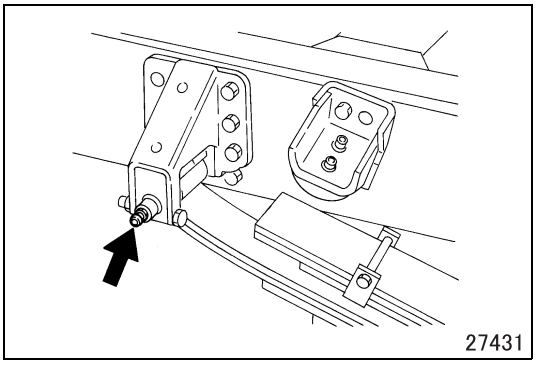

1. Rear spring pin front (left and right, 2 points)

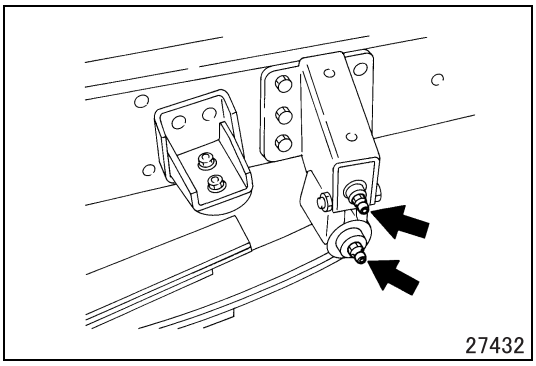

2. Rear spring pin rear (left and right, 4 points)

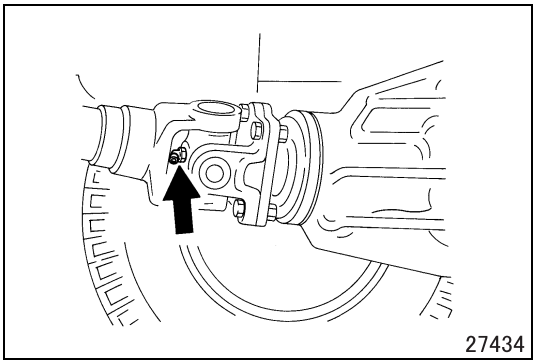

3. Propeller shaft universal joint's-all

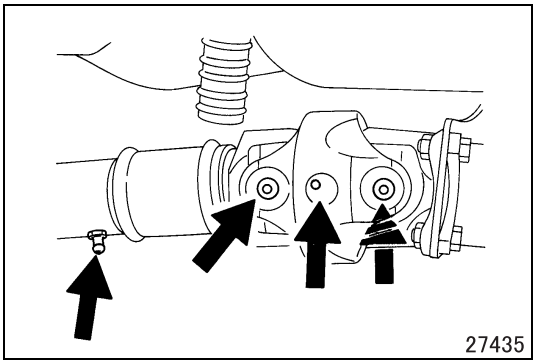

4. Double Cardin joint, propeller shaft slip joint, propeller shaft universal joint

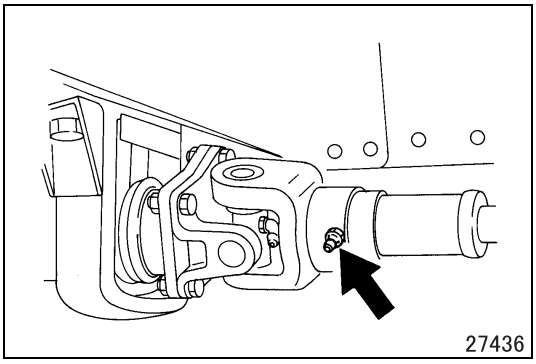

5. Propeller shaft slip joint

Group 11

Engine

Table of Contents

Back

Home

MITSUBISHI FUSO TRUCK OF AMERICA, Inc.

Pub.No.TWSE0805-11

INDEX

SPECIFICATIONS 11-2

STRUCTURE AND OPERATION
1. Exploded View 11-3
2. Cylinder Head, Cylinder Head Gasket, Camshaft and Camshaft Frame 11-4
3. Valve Mechanism 11-5
4. Connecting Rod 11-6
5. Piston 11-6
6. Timing Gears 11-7
7. Flywheel 11-7
8. Balance Shafts 11-8
9. Crankcase and Main Bearings 11-9
10. Oil Seals 11-11

TROUBLESHOOTING 11-12

ON-VEHICLE INSPECTION AND ADJUSTMENT
1. Measuring Compression Pressure 11-14
2. Inspection and Adjustment of Valve Clearances 11-16
3. Removal and Installation of Injector <Crew Cab (Fixed type)> 11-18

ENGINE REMOVAL AND INSTALLATION
<TILT CAB> 11-20
<FIXED CAB> 11-28

ROCKER COVER 11-30

ROCKERS AND CAMSHAFTS 11-32

CYLINDER HEAD AND VALVE MECHANISM 11-46

PISTONS, CONNECTING ROD AND CYLINDER LINERS 11-62

FLYWHEEL 11-76

FRONT CASE 11-80

TIMING GEARS AND BALANCE SHAFTS 11-84

CRANKSHAFT AND CRANKCASE 11-92

BALANCE SHAFT BUSHINGS 11-100

SPECIFICATIONS

Item		Specifications	
Engine model		4M50T7	4M50T8
Type		4-cylinder, in-line, water-cooled, 4-cycle diesel engine	
Combustion chamber		Direct injection type	
Valve mechanism		Double overhead camshaft (DOHC)	
Maximum output	HP / rpm	155 / 2700	185 / 2700
Maximum torque	ft.lbf / rpm	347 / 1600	391 / 1600
Bore × stroke	mm {in.}	ϕ114 × 120 {ϕ4.49 × 4.72}	
Total displacement	L {qts}	4.899 {4899}	
Compression ratio		17.5	

1. Exploded View

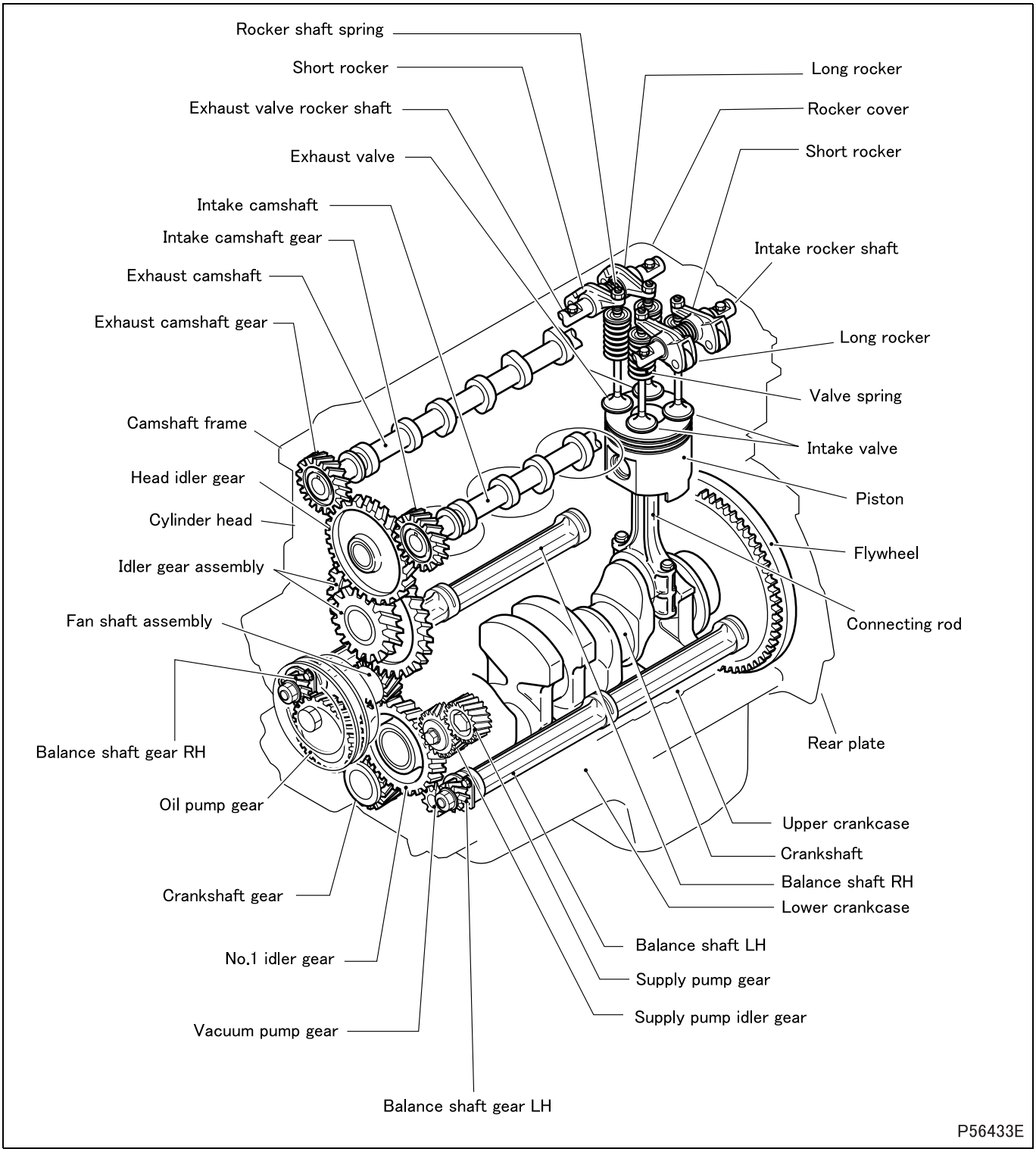

2. Cylinder Head, Cylinder Head Gasket, Camshaft and Camshaft Frame

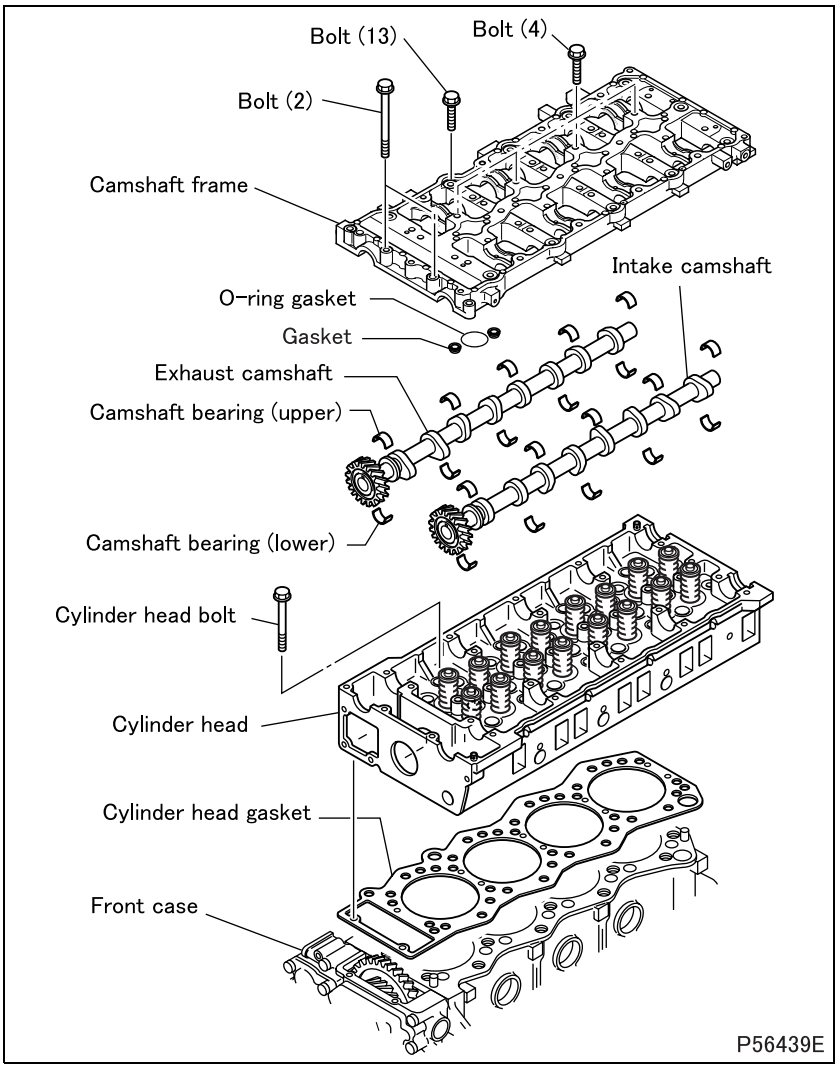

- The camshaft is supported at its journals from below by the cylinder head and retained from above by the camshaft frame.
- The upper and lower camshaft bearings are identical, but cannot be interchanged when they are reinstalled.
- The exhaust camshaft and the intake camshaft have identical gears but different cams.
- The thirteen shortest bolts and four shorter bolts fasten the camshaft frame onto the cylinder head.
- The two long bolts fasten the camshaft frame to the front case.

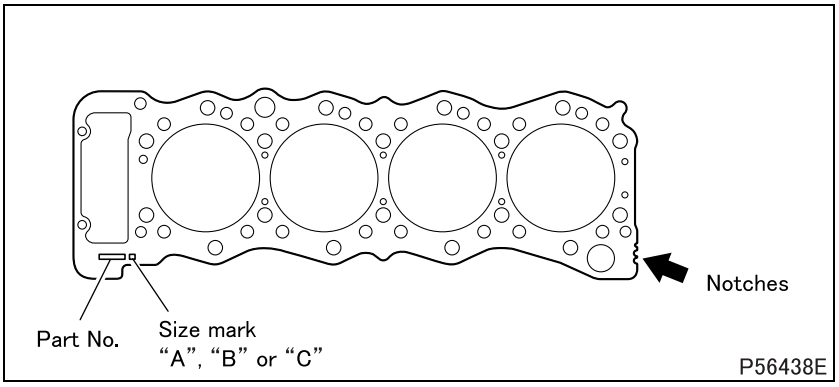

2.1 Cylinder head gasket

- Select and use a cylinder head gasket of a thickness that can accommodate the piston projection.
- The size (thickness) class of the gasket can be identified by the shape of the notches and size mark cut on the edge of each gasket.

3. Valve Mechanism

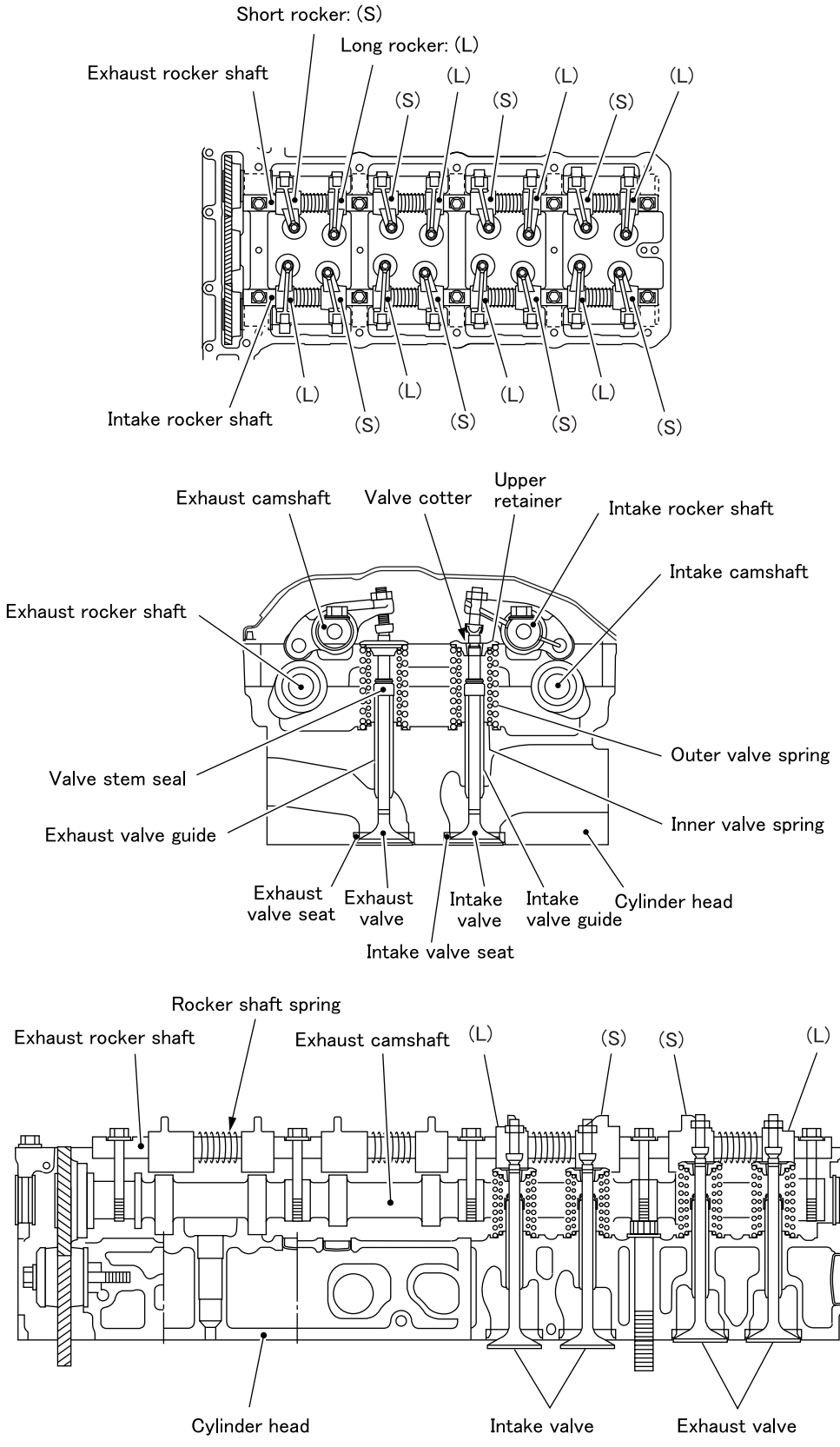

P102370E

- The short rockers and the long rockers are installed differently, as shown in the illustration.
- Each valve has an inner valve spring and an outer valve spring.

4. Connecting Rod

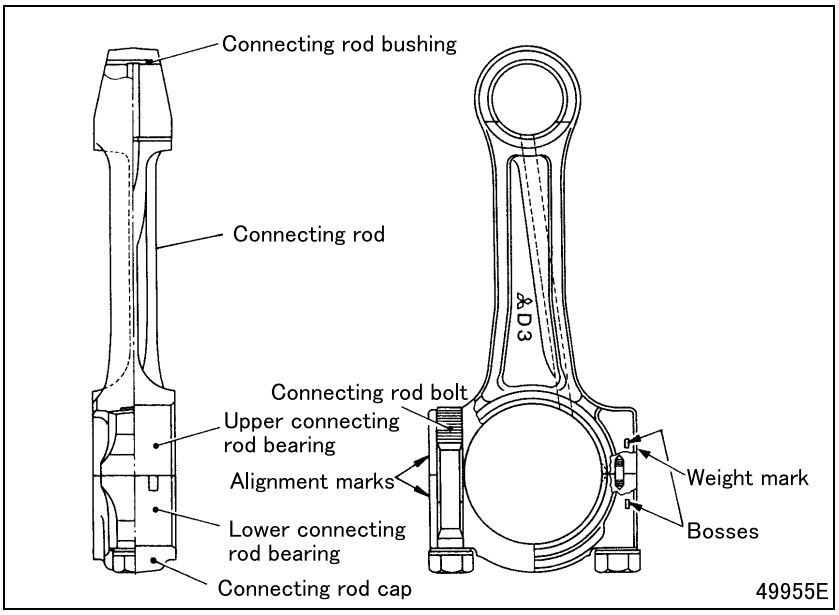

Weight mark:
"C" to "G"
(with "G" as the maximum)

5. Piston

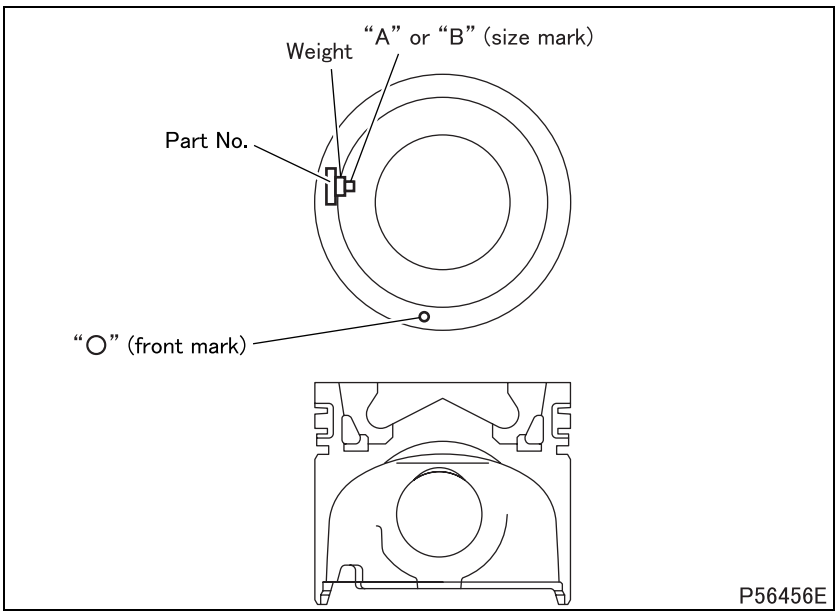

- Each piston must be mated with a cylinder in the upper crankcase that has the same size mark as the piston. The pistons are marked with either "A" or "B", where "B" stands for the larger and "A" for the smaller of the two available diameters.
- The pistons have been made lightweight by use of a special aluminum alloy, as well as by the reduction of their height.

6. Timing Gears

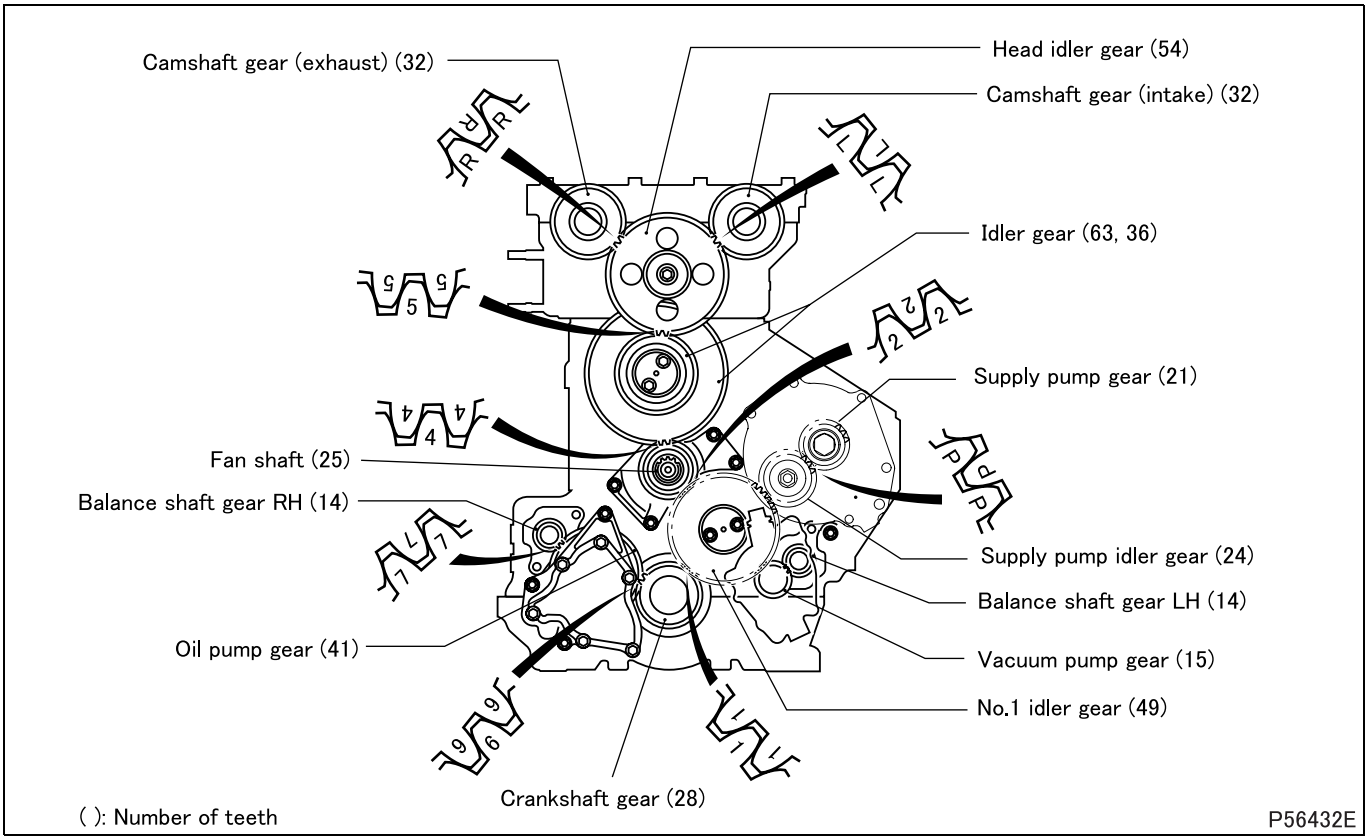

- All gears, except the vacuum pump gear, each has timing mark(s) to ensure correct engagement during assembly.

7. Flywheel

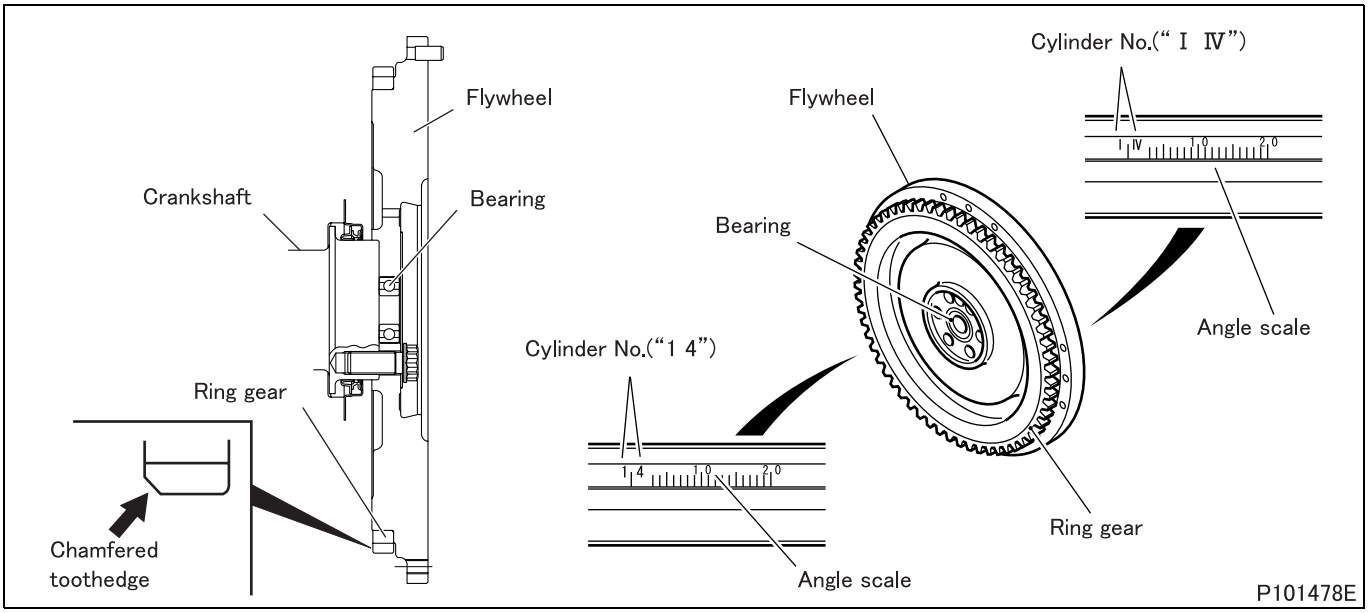

- One side of each flywheel ring gear tooth is chamfered to facilitate the engagement of the starter pinion.

8. Balance Shafts

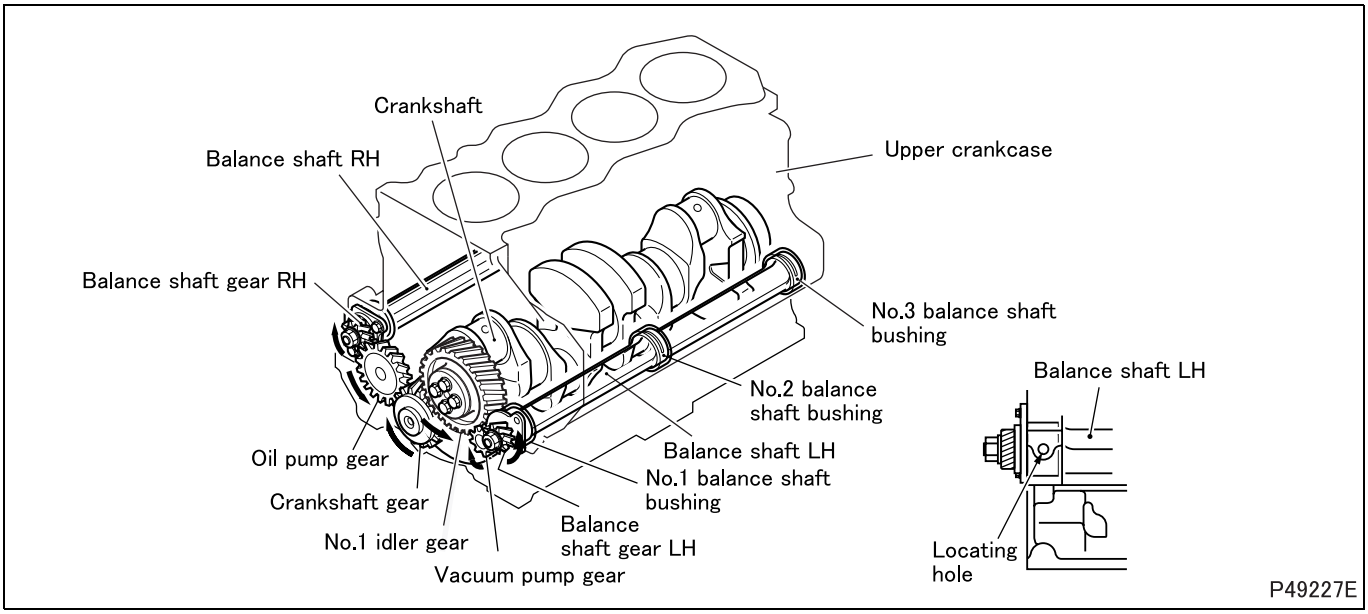

- The balance shaft RH and balance shaft LH are mounted in the upper crankcase on the right and left sides of the crankshaft. The balance shafts reduce the vibration of the engine caused by the rotation of the crankshaft.
- The balance shaft RH and balance shaft LH are both driven by timing gears. Each balance shaft is held in the upper crankcase by way of three balance shaft bushings.
- The balance shaft LH has a locating hole to enable correct installation.

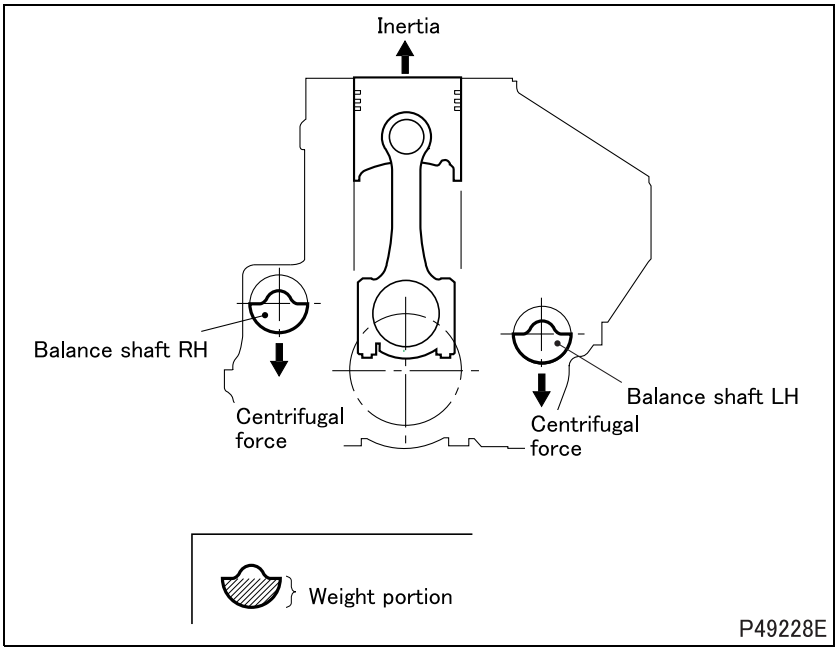

8.1 Reduction of vertical vibration (secondary vibration element)

- When the piston moves up and down, vertical vibrations are generated at the top dead center (TDC) and bottom dead center (BDC) due to inertia.
- The balance shaft LH and the balance shaft RH rotate so that their weight portions are at the bottom positions when a piston is at TDC and at the top positions when the piston is at BDC, i.e., the weight portions are always on the opposite side to the piston head.
- This creates centrifugal forces in the balance shaft RH and balance shaft LH, the total of which is equal in amount to the inertia force that the piston creates when it is at TDC or BDC. These centrifugal forces in the balance shafts cancel out the inertia forces resulting from piston's movements and reduce the amount of vertical vibration.
- The balance shafts also reduce the moment created around the crankshaft (which constitutes secondary vibration elements) when the engine is running in the middle-to-high speed range.

9. Crankcase and Main Bearings

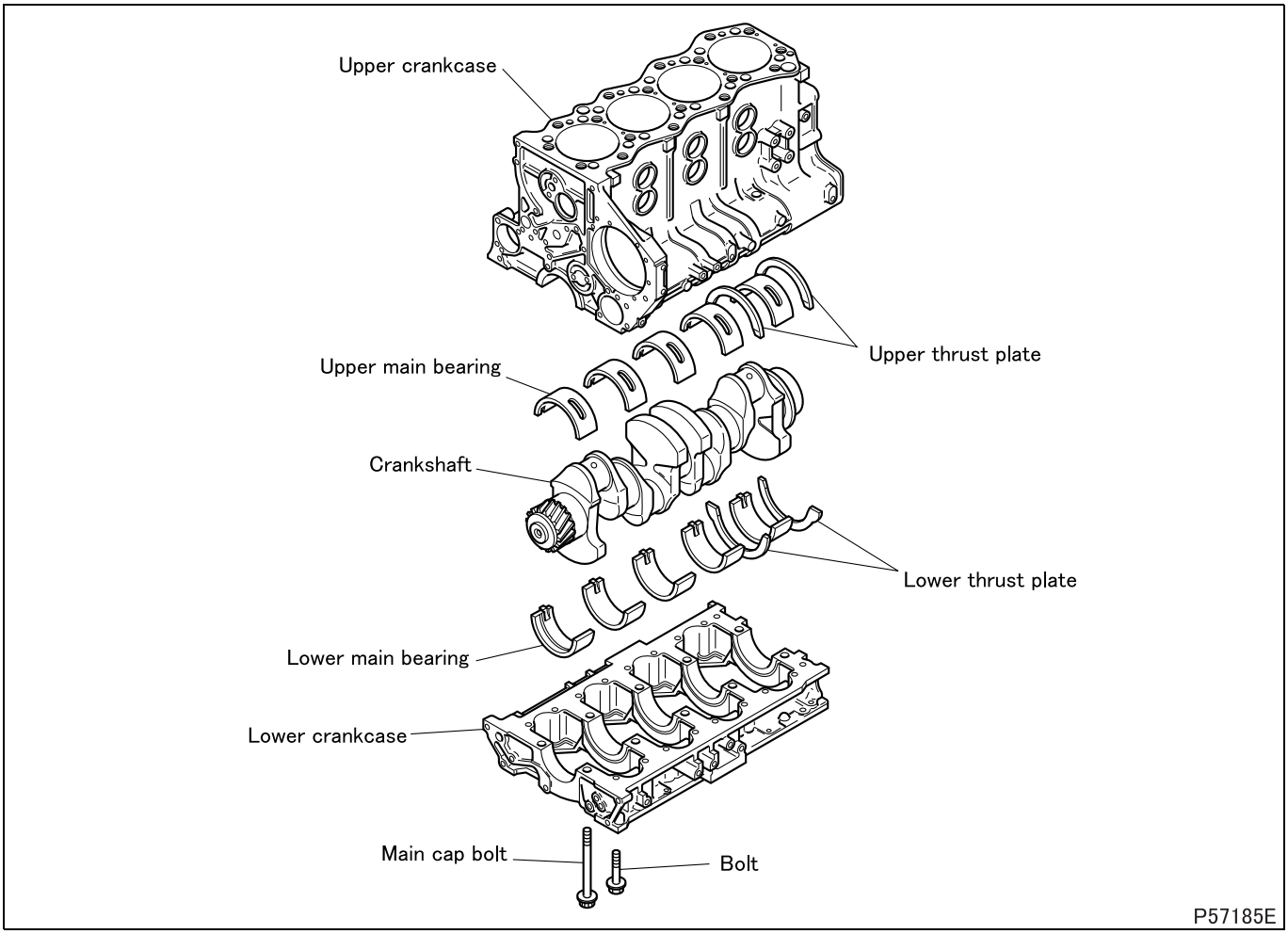

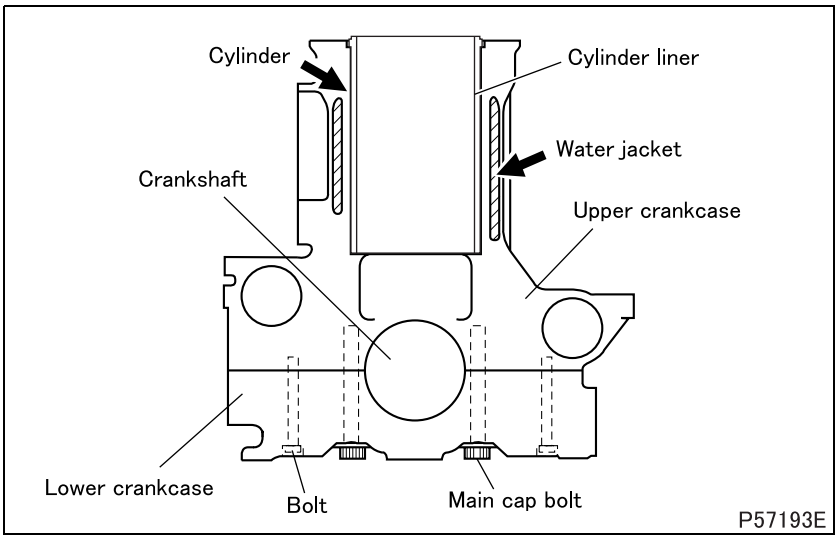

9.1 Crankcase

- The crankcase is a two-piece type consisting of an upper crankcase and a lower crankcase, which hold the crankshaft in between.
- Cylinder liners are inserted into the cylinder bores in the upper crankcase.
- An water jacket is formed in the walls of these cylinders to cool them down.
- The main cap bolts and the bolts that fasten the upper and lower crankcases together are tightened using a special method.

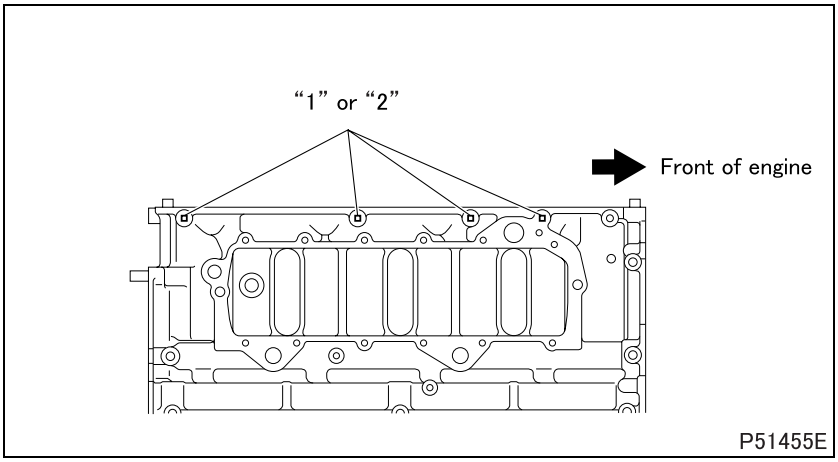

- The upper crankcase is marked with a size mark ("1" or "2") to be used as a reference in selecting cylinder liners.
- The first to forth size marks from the front of the engine correspond to the No. 1 to No. 4 cylinders.

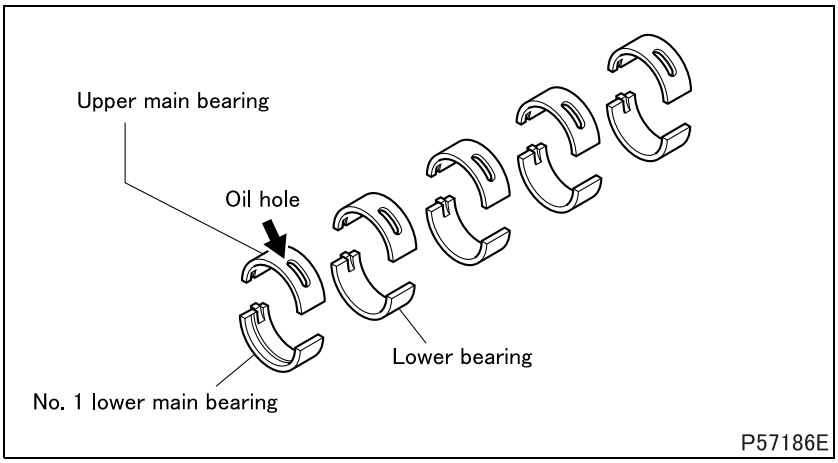

9.2 Main bearing

- The upper main bearings have oil holes through which engine oil is supplied to the crankshaft journals.
- An oil groove is provided in the No. 1 lower bearing.

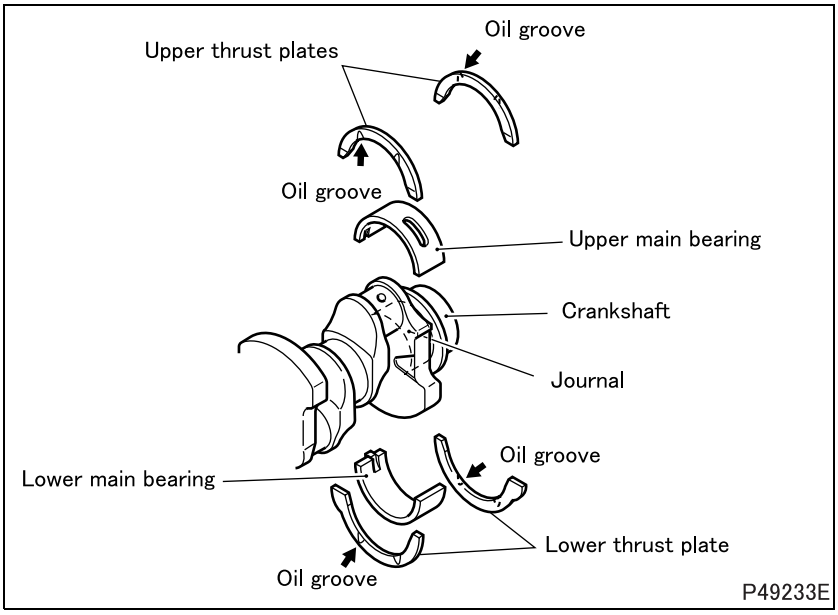

9.3 Thrust plates

- Two upper and lower thrust plate pairs are installed on both sides of the upper and lower main bearings at the rearmost journal of the crankshaft.
- Select the thrust plates of a thickness that can accommodate the crankshaft end play. The thrust plates each have two oil grooves, which assures their minimum friction against the crankshaft journal.

10. Oil Seals

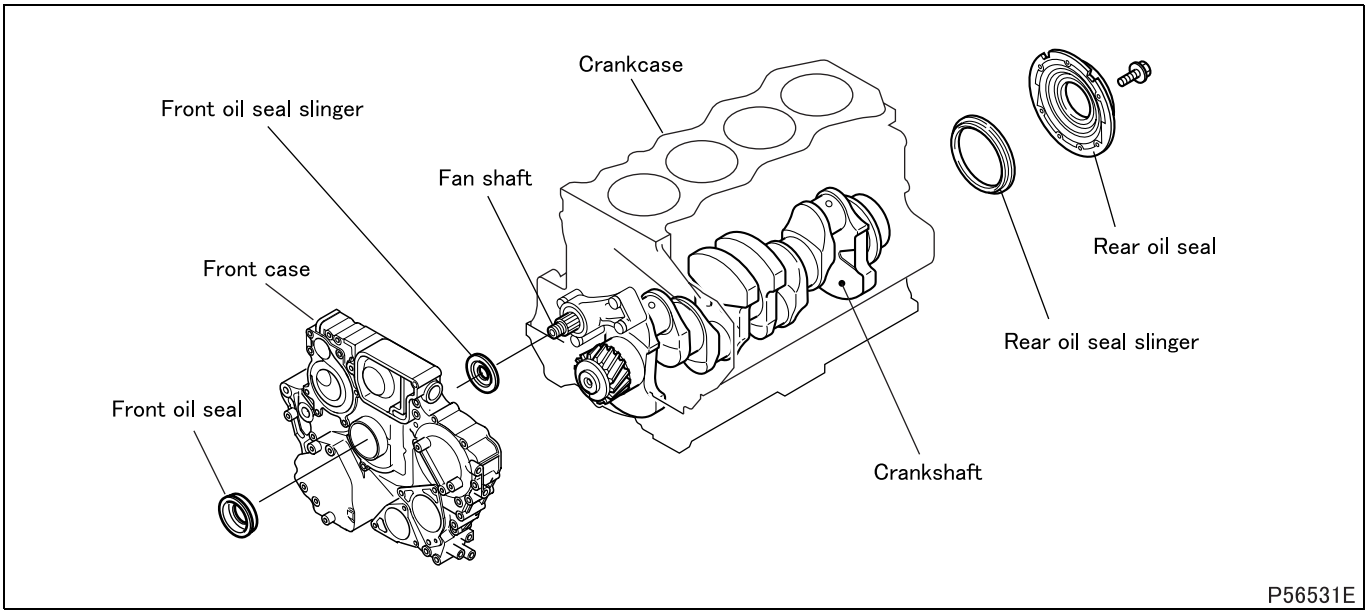

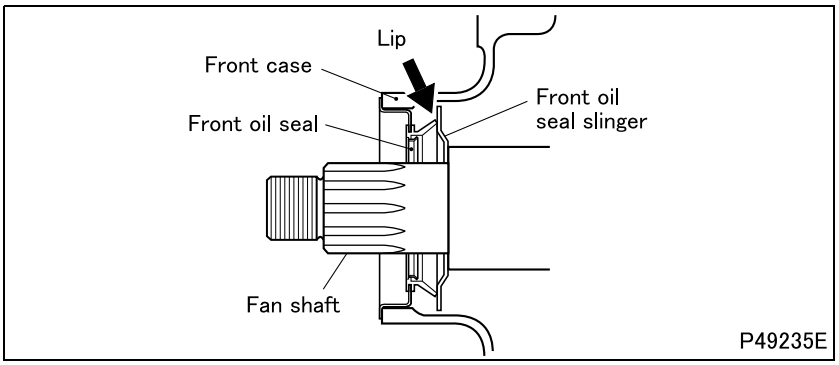

10.1 Front oil seal

- The front oil seal is fitted in the front case and prevents oil from leaking by contact of its lip with the front oil seal slinger.
- The front oil seal slinger is press-fitted onto the fan shaft.

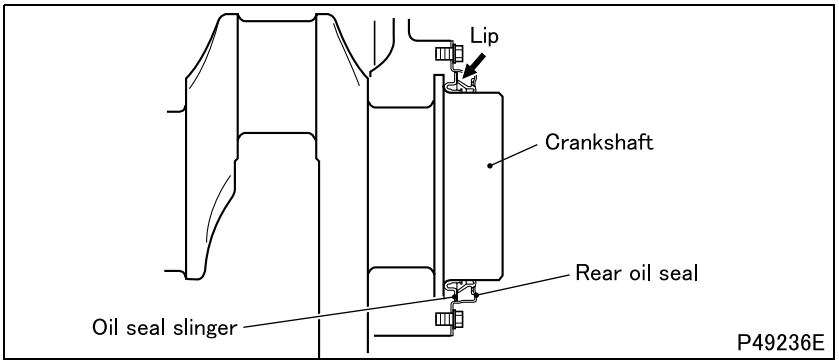

10.2 Rear oil seal

- The rear oil seal is fitted in the crankcase assembly and prevents oil from leaking by contact of its lip with the rear oil seal slinger.
- The rear oil seal slinger is press-fitted onto the rear end of the crankshaft.

Possible causes / Symptoms		Low power output	Abnormal engine noise	Reference Gr
Cylinder head and valve mechanism	Incorrect valve clearance	O	O	
	Defective cylinder head gasket	O	O	
	Worn valve and valve seat; carbon deposits	O	O	
	Weakened valve spring	O	O	
	Defective rocker shaft and camshaft frame		O	
	Poor lubrication of rocker shaft and camshaft frame		O	
Timing gears	Incorrect backlash in timing gears		O	
	Poor lubrication of timing gears and idler shaft		O	
Camshaft	Excessive end play in camshaft		O	
	Worn camshaft		O	
Pistons and connecting rods	Worn/damaged piston ring groove(s)	O	O	
	Worn/damaged piston ring(s)	O	O	
	Worn piston pin and connecting rod small end		O	
Crankshaft	Excessive end play in crankshaft		O	
	Incorrectly fitted crankshaft		O	
	Worn/damaged crankshaft pins and connecting rod bearings		O	
	Worn/damaged crankshaft journals and main bearings		O	
Fuel system	Defective supply pump	O	O	Gr13EA
	Faulty fuel spray from injector	O	O	Gr13A
	Air trapped in fuel system	O		
Cooling system	Malfunctioning cooling system components	O		Gr14
	Loose/damaged belts		O	
Intake and exhaust system	Clogged air cleaner	O	O	Gr15
	Clogged muffler	O	O	
Incorrect oil viscosity		O		Gr12
Improper fuel		O		
Incorrectly fitted piping and hoses			O	
Defective/incorrectly fitted alternator and other auxiliaries			O	

M E M O

1. Measuring Compression Pressure

Service standards

Location	Maintenance item		Standard value	Limit	Remedy
–	Compression pressure	Each cylinder (at 220 rpm)	2840 kPa {410 psi, 29 kgf/cm^2}	2260 kPa {325 psi, 23 kgf/cm^2}	Inspect
		Cylinder-to-cylinder pressure difference	–	390 kPa {57 psi, 4 kgf/cm^2} or less	Inspect

Special tools (Unit: mm {in.})

Mark	Tool name and shape	Part No.	Application
a	Compression gauge adapter A: M14 × 1.5 B: 58 {2.28} C: φ7.2 {φ0.28} 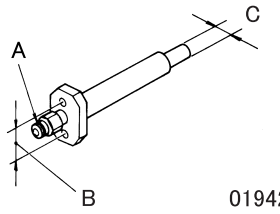	MH063853	Measuring compression pressure

- A drop in compression pressure can be used as a guide to determine when the engine should be overhauled.
- Measure the compression pressure at regular intervals. Keeping track of its transitions can provide a useful tool for troubleshooting. On new vehicles and vehicles with newly replaced parts, the compression pressure will be somewhat higher depending on the break-in condition of piston rings, valve seats, etc., but this will return to normal as the parts wear down.
- Before the compression measurement, confirm that the engine oil, starter, and battery are in normal condition.
- Place the vehicle in the following conditions.
  - Warm up the engine until the coolant temperature reaches approximately 75 to 85°C {167 to 185°F}.
  - Turn off the lights and auxiliaries.
  - Place the transmission in neutral (in the parking range P for automatic transmissions).
  - Place the steering wheel in the straight-ahead position.

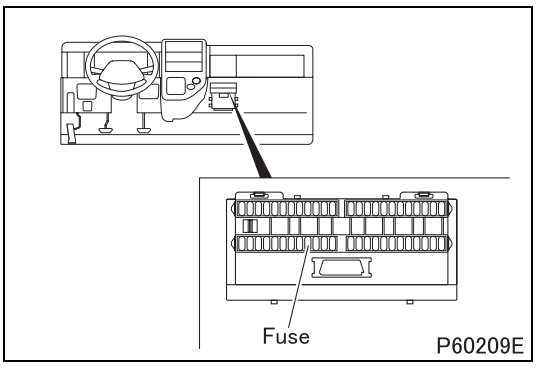

[Removal]

- Remove the fuse (M9) to prevent fuel from being injected when the engine is cranked by the starter.

CAUTION ⚠

- **When cranking the engine, never shut off the power supplied to the engine electronic control unit by disconnecting the engine electronic control unit connector or other similar methods. If the engine is cranked with the power to the engine electronic control unit shut off, the supply pump will not be controlled by the electronic control unit, causing the supply pump to be malfunctioned.**

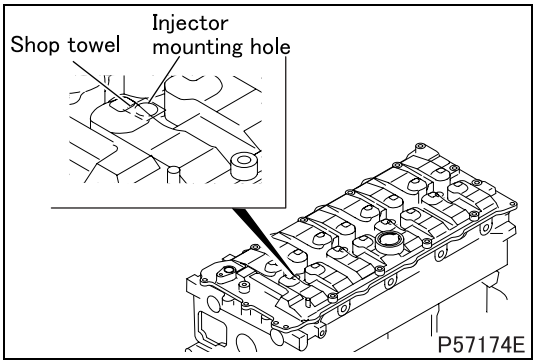

- Disconnect the injector connector and remove all injectors. (For the double-cab (fixed-cab) models, see “3. Removal and Installation of Injector <Crew Cab (Fixed type)>”.

[Inspection]

- Cover the injector mounting holes with shop towels. After cranking the engine by the starter, check that no foreign substances are deposited on the shop towels.
- If there are deposits (such as engine oil or coolant) on the shop towels, the following may be the cause:
  - Deposits of engine oil alone can mean a defective piston ring seal; the piston rings must be inspected.
  - Deposits of both engine oil and coolant can mean cracks in the cylinders; the crankcase must be replaced.

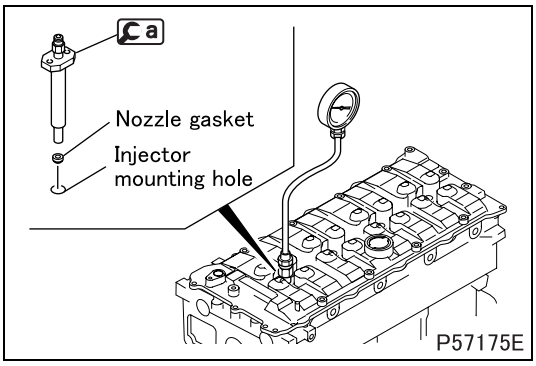

WARNING ⚠

- **When coolant and engine oil deposits are evident, cranking the engine could be dangerous as these substances, heated to high temperatures, will blow out from the injector mounting holes. Make sure to stay away from the injector mounting holes when the engine is being cranked.**

- Attach the gasket and Ca to one of the injector mounting holes. Then, connect a compression gauge to Ca.
- Crank the engine and measure the compression pressure for all the cylinders one after another. Determine the compression pressure difference between the cylinders.
- If the compression pressure is below the limit or the cylinder-to-cylinder pressure differences is not within the limit, pour a small amount of engine oil into the corresponding injector mounting hole and remeasure the compression pressure.
  - If the compression pressure increases, the piston rings and cylinder surfaces may be badly worn or otherwise damaged.
  - If the compression pressure remains unchanged, there may be seizure in the valves, the valves may be incorrectly seated or the cylinder head gasket may be defective.

[Installation]

- Install the injector. (See Gr13A.)
- Install the rocker cover and the gasket. (See later sections.)

2. Inspection and Adjustment of Valve Clearances

Service standards (Unit: mm {in.})

Location	Maintenance item		Standard value	Limit	Remedy
–	Valve clearance (when cold)	Intake valve	0.4 {0.016}	–	Adjust
		Exhaust valve	0.5 {0.020}	–	

Tightening torque (Unit: N·m {ft.lbs, kgf·m})

Mark	Parts to be tightened	Tightening torque	Remarks
–	Lock nut (adjusting screw stopping)	21 {15.5, 2.1}	–

Special tools

Mark	Tool name and shape	Part No.	Application
Ⓐ	Cranking handle 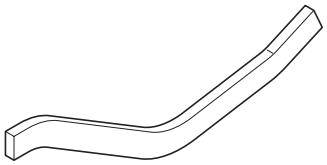 P58299	MH063704	Turning the fan pulley

- Valve clearances should be checked and adjusted as follows while the engine is still cold.

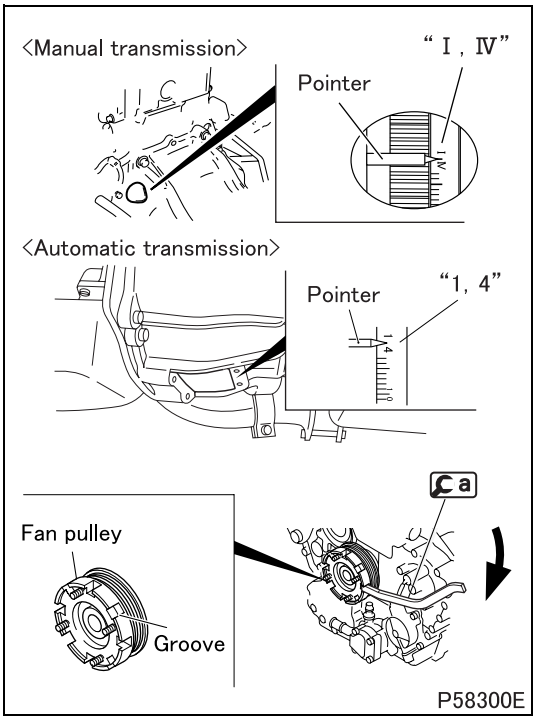

[Inspection]

CAUTION ⚠

- **Never cut off the engine electronic control unit power supply when cranking the engine.**

- Remove the rocker cover.
- Disconnect the injector connector.
- Bring the No. 1 or No. 4 cylinder piston to the top dead center (TDC) on the compression stroke by the following procedure:
  - Hook Ⓐ onto the grooves in the fan pulley.
  - Turn the fan pulley in the illustrated direction to align the pointer with the "I, IV" or "1" to "4" mark on the flywheel.
  - This will place either the No. 1 or No. 4 cylinder piston at TDC on the compression stroke. The cylinder in which the rocker arms for both the intake and exhaust valves can be pushed down by hand by the valve clearance amounts has its piston at TDC. Rotate the engine by one full turn to switch the TDCs of the No. 1 and No. 4 cylinder pistons.

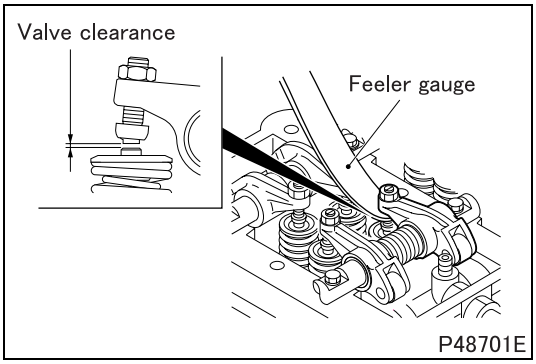

- With the No. 1 or No. 4 cylinder piston at TDC, measure the clearance of the valves marked with a circle in the table below.

Cylinder No.	1		2		3		4	
Valve	IN	EX	IN	EX	IN	EX	IN	EX
No. 1 cylinder piston at TDC on compression stroke	O	O	O	–	–	O	–	–
No. 4 cylinder piston at TDC on compression stroke	–	–	–	O	O	–	O	O

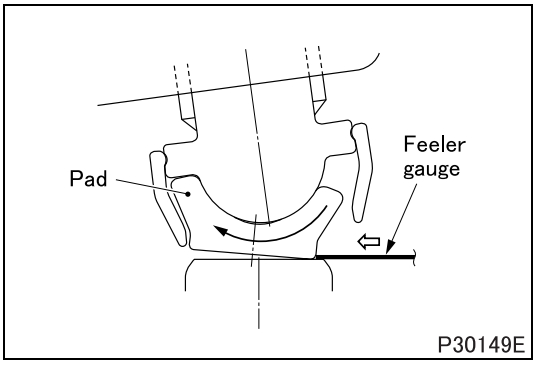

- The feeler gauge cannot be inserted under the adjusting screw pad without carrying out the above step, as the pad will block the feeler gauge as shown in the illustration.

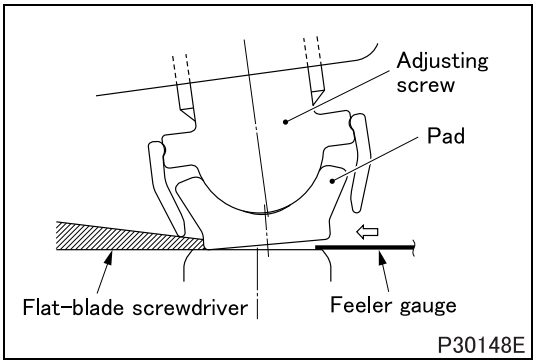

- To insert the feeler gauge under the adjusting screw pad, push the pad at the bottom on one side with a flat-blade screwdriver or a similar tool. Insert the feeler gauge into the small space created under the other side of the pad, as shown in the illustration.
- The feeler gauge must have a slight drag when taking measurements.
- If the feeler gauge can be moved without any resistance, the measurement will be incorrect.
- If the measurements are not within the standard value range, adjust the value clearance by the following procedures.

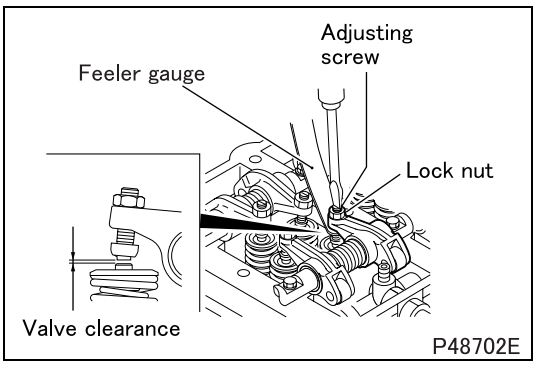

[Adjustment]

- Adjust the valve clearance by loosening the lock nut and rotating the adjusting screw so that the feeler gauge can only be moved with a slight drag.
- After the adjustment, hold the adjusting screw in position with a screwdriver and tighten the lock nut to the specified torque.
- Recheck the valve clearance with the feeler gauge, and readjust if the measurements are not within the specified value range.

3. Removal and Installation of Injector <Crew Cab (Fixed type)>

- Perform this work only when No. 3 cylinder injector on the fixed type double cab vehicle is impossible to remove and install.

Special tools

Mark	Tool name and shape	Part No.	Application
a	Turnbuckle 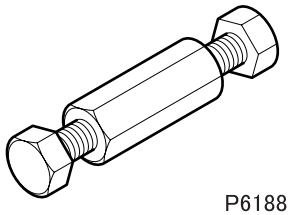 P61881	MH063702	Displacement of engine

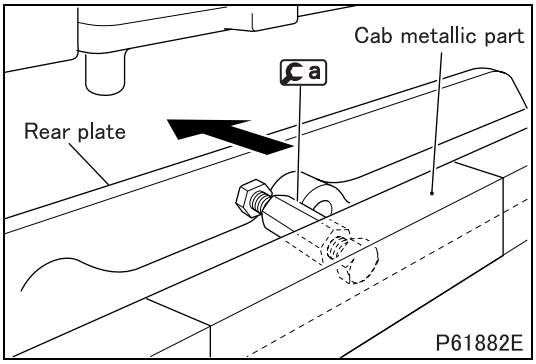

- Remove the engine cover and rear seat foot cover.
- Set a between the cab metallic part and the rear plate of the engine.
- Turning a with a spanner wrench, move the engine approximately 5 to 6 mm {0.20 to 0.24 in.} forward.
- Remove the injector of No. 3 cylinder.

M E M O

ENGINE REMOVAL AND INSTALLATION <TILT CAB>

<Except for FG>

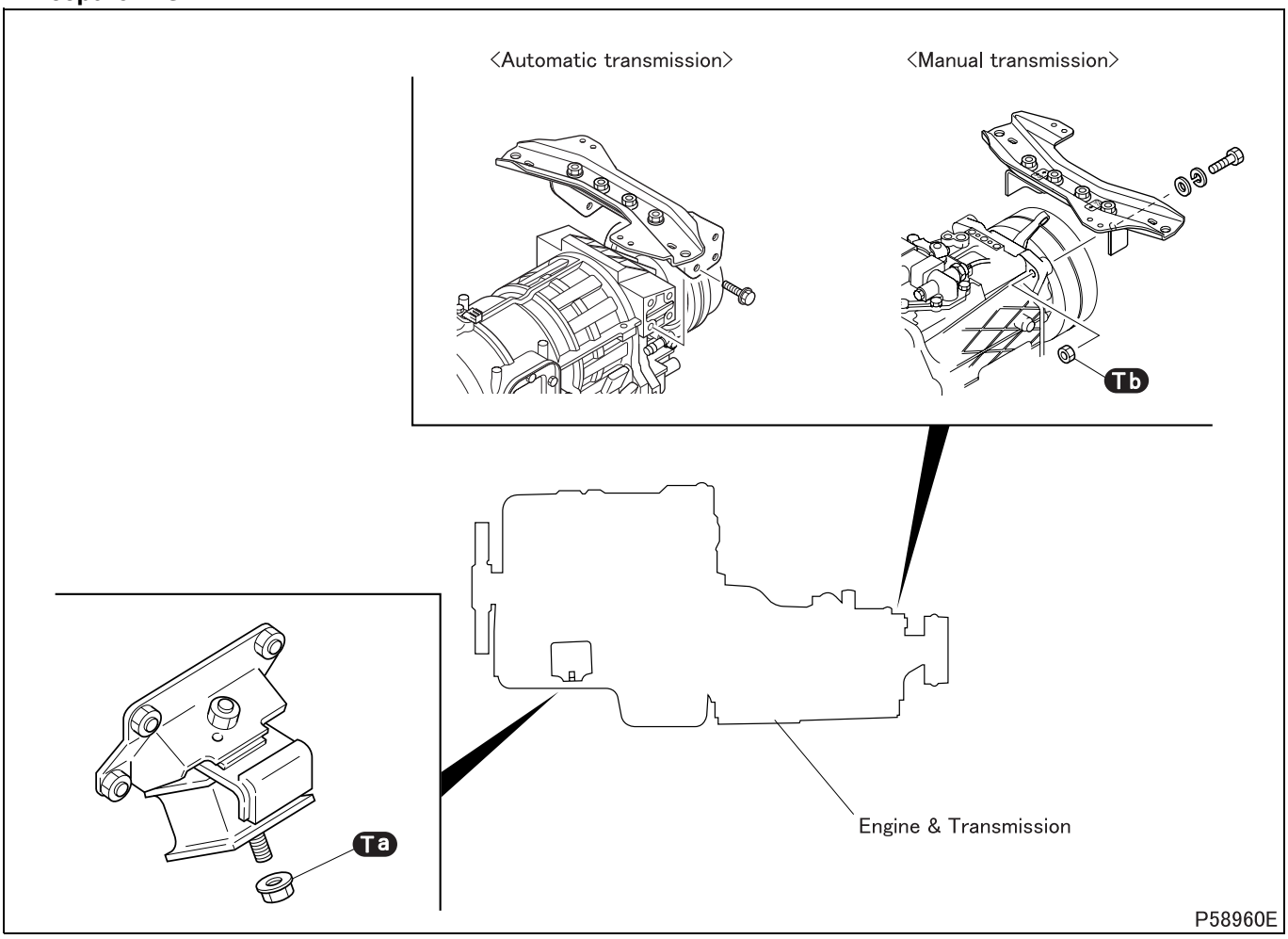

CAUTION ⚠

- **Only use hoisting equipment appropriate for the engine and transmission weight (approximately 600 kg {1320 lb}).**

Tightening torque (Unit: N·m {ft.lbs, kgf·m})

Mark	Parts to be tightened	Tightening torque	Remarks
Ta	Nut (front mounting installation)	69 to 88 {51 to 65, 7 to 9}	–
Tb	Nut (rear mounting installation)	130 to 170 {96 to 125, 13 to 17}	–

Special tools

Mark	Tool name and shape	Part No.	Application
a	Engine front hanger 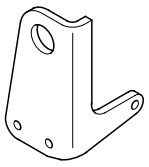 P57188	MH063636	Removal and installation of engine
b	Flange bolt 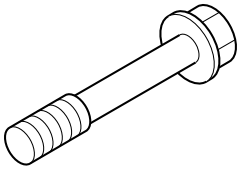 P29984	MF140429 MF140433 MF140421	Installation of engine front hanger
c	Engine rear hanger 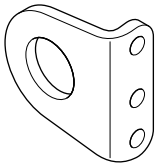 P58957	MH063711	Removal and installation of engine

◆Work before removal◆

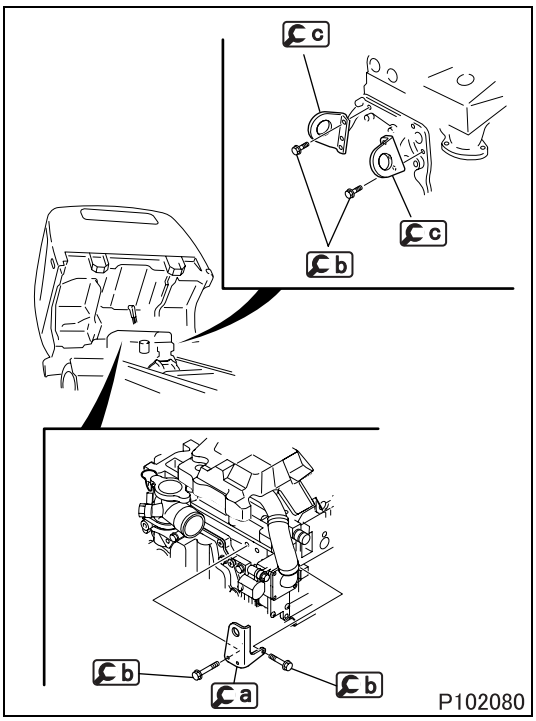

P102080

■ **Preparing for engine removal: Installation of engine front hanger and flange bolt**

- Install a, b and c on the engine.

◆Removal procedure◆

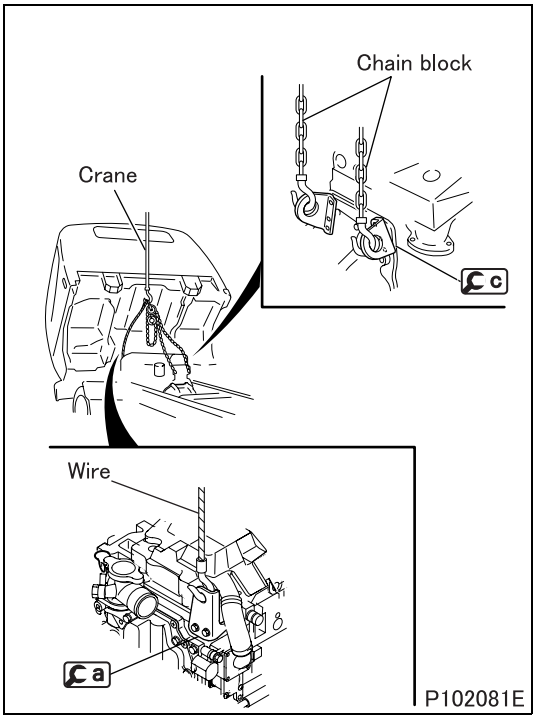

■ **Removal: Engine and transmission**

- Hook the wire rope on a and hitch the chain block to c. Then, pull all the slack out of the slings by a crane.

CAUTION ⚠

- **The slings must be strong enough to hang the engine and transmission assembly (weighing approximately 600 kg {1320 lb}).**
- **Be sure to keep the slings away from the exhaust gas recirculation pipes.**

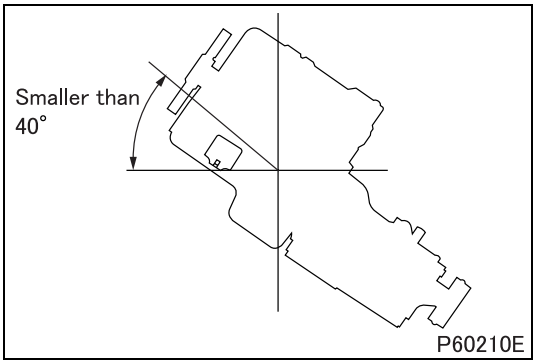

- Make sure that all harnesses and pipes are disconnected.
- Lift the engine and transmission assembly slowing. Take care not to bump the assembly against the frame and cab.

CAUTION ⚠

- **When lifting the engine and transmission assembly, do not incline it larger than 40°.**

M E M O

ENGINE REMOVAL AND INSTALLATION <TILT CAB>

<FG>

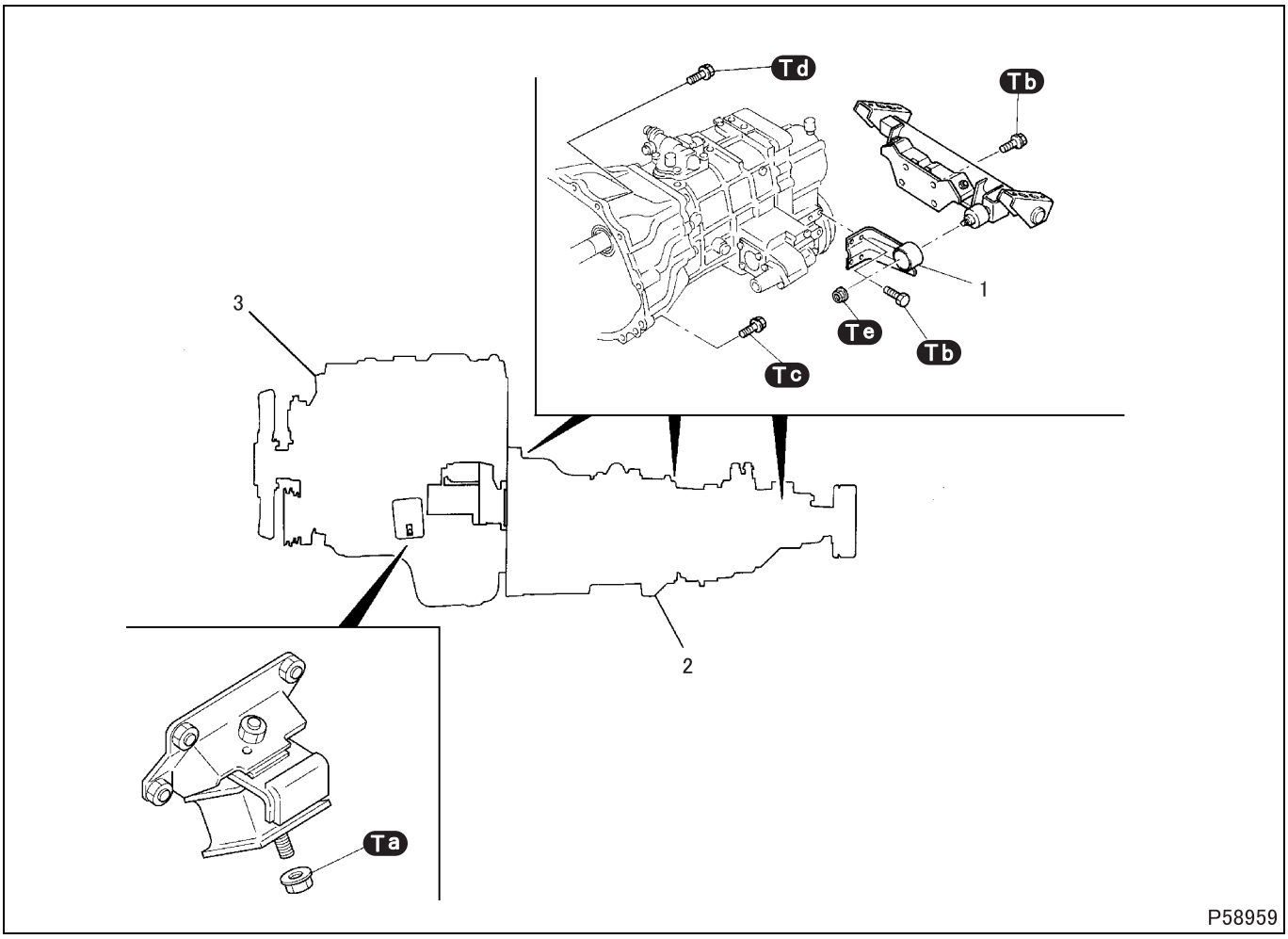

● **Removal sequence**

1 Roll stopper
2 Transmission
3 Engine

● **Installation sequence**

Follow the removal sequence in reverse.

CAUTION ⚠

- **Be careful not let the engine hit the cab or the rear body when hoisting the engine.**
- **Only use hoisting equipment appropriate for the engine weight (approximately 500 kg {110 lb}).**

Tightening torque (Unit: N·m {ft.lbs, kgf·m})

Mark	Parts to be tightened	Tightening torque	Remarks
Ta	Nut (front mounting installation)	69 to 88 {51 to 65, 7 to 9}	–
Tb	Bolt (roll stopper bracket installation)	45 to 65 {33 to 48, 4.6 to 6.6}	–
	Bolt (rear mounting installation)		
Tc	Bolt (transmission installation)	82.4 {61, 8.4}	–
Td	Bolt (transmission installation)	47.1 {35, 4.8}	–
02	Nut (roll stopper bracket installation)	38 to 54 {28 to 40, 3.9 to 5.5}	–

Special tools

Mark	Tool name and shape	Part No.	Application
a	Engine front hanger 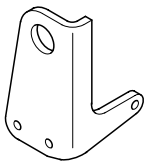 P57188	MH063636	Removal and installation of engine
b	Flange bolt 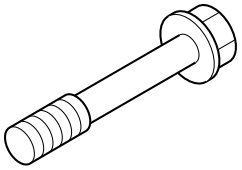 P29984	MF140429 MF140433 MF140421	Installation of engine front hanger
c	Engine rear hanger 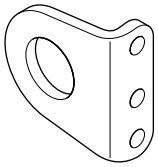 P58957	MH063711	Removal and installation of engine

◆Work before removal◆

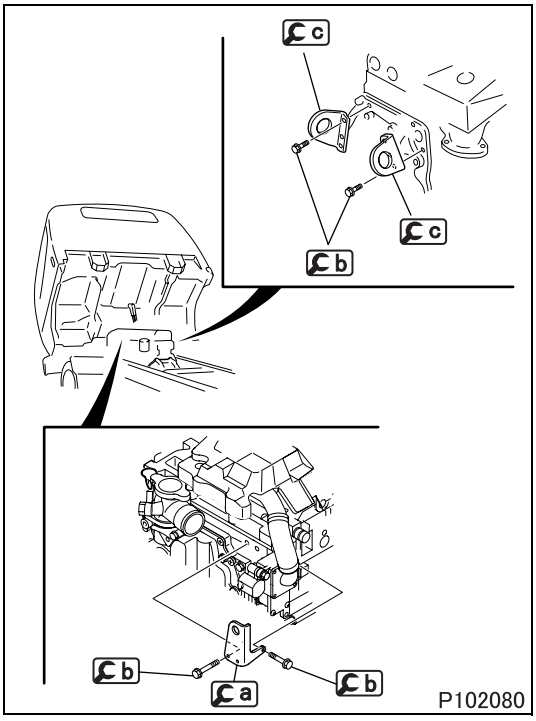

P102080

■ **Preparing for engine removal: Installation of engine front hanger and flange bolt**

- Install a, b and c on the engine.

◆Removal procedure◆

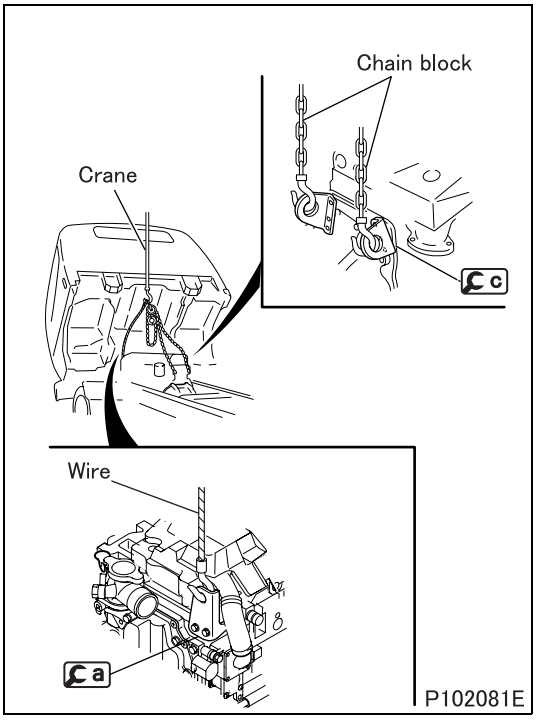

■ **Removal: Engine**

- Hook the wire rope on a and hitch the chain block to a. Pull all the slack out of the slings.

CAUTION ⚠

- **The slings must be strong enough to hang the engine (weighing approximately 500 kg {1100 lb}).**
- **Be sure to keep the slings away from the exhaust gas recirculation pipes.**

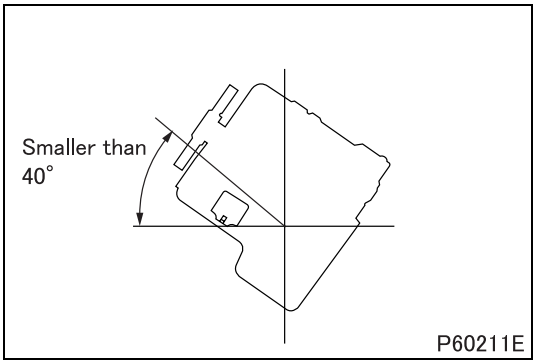

- Make sure that all harnesses and pies are disconnected.
- Hoist the engine slowly, taking care not to let the engine hit the frame and the cab.

CAUTION ⚠

- **When lifting the engine and transmission assembly, do not incline it larger than 40°.**

- Once the bottom of the engine is out of the frame, turn the engine by 90 degrees and remove it out of the vehicle.

M E M O

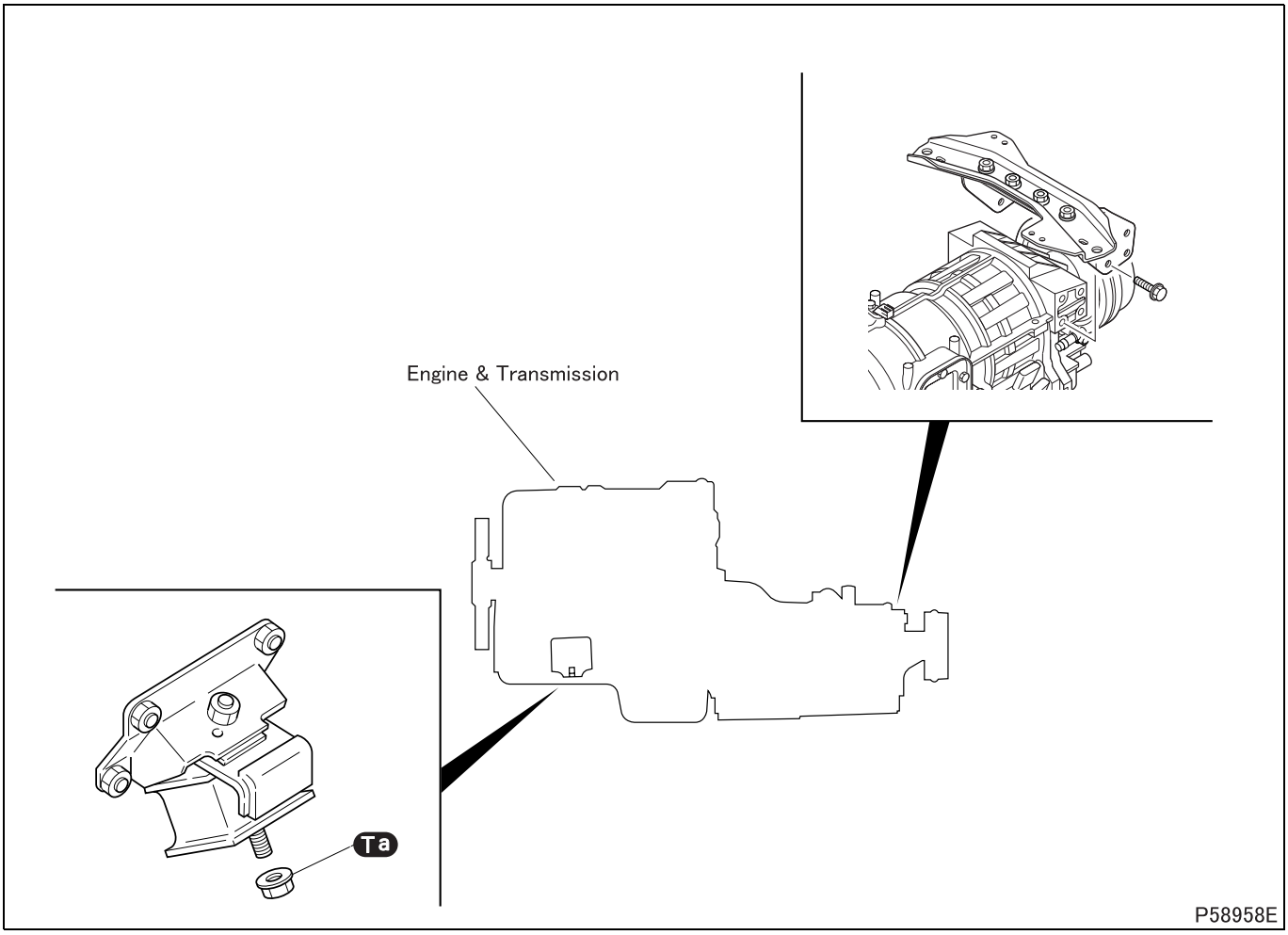

CAUTION ⚠

- **Before removing each part, support the engine and transmission assembly in place using an engine lifter and a transmission jack.**

● Installation sequence

Follow the removal sequence in reverse.

Tightening torque (Unit: N·m {ft.lbs, kgf·m})

Mark	Parts to be tightened	Tightening torque	Remarks
Ta	Nut (front mounting installation)	69 to 88 {51 to 65, 7 to 9}	–

◆Removal procedure◆

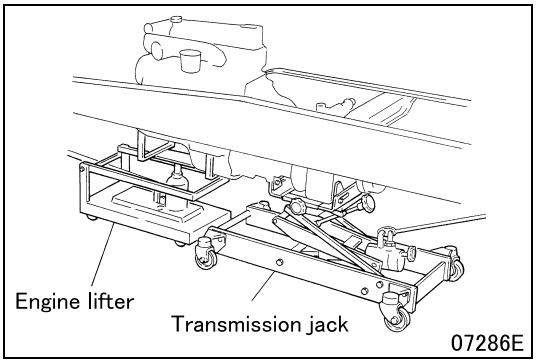

■ **Removal: Engine and transmission assembly**

- Support the engine and transmission assembly with an engine lifter and a transmission jack.
- Check that all wiring and piping have been disconnected from the engine.

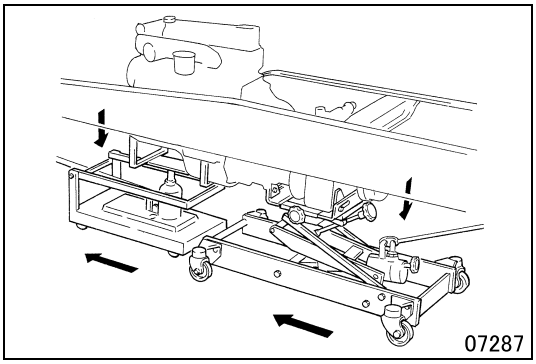

- Lower the engine and transmission assembly to the greatest extent possible while keeping it horizontally balanced.
- Jack up the vehicle and slide the engine and transmission assembly forward.

ROCKER COVER

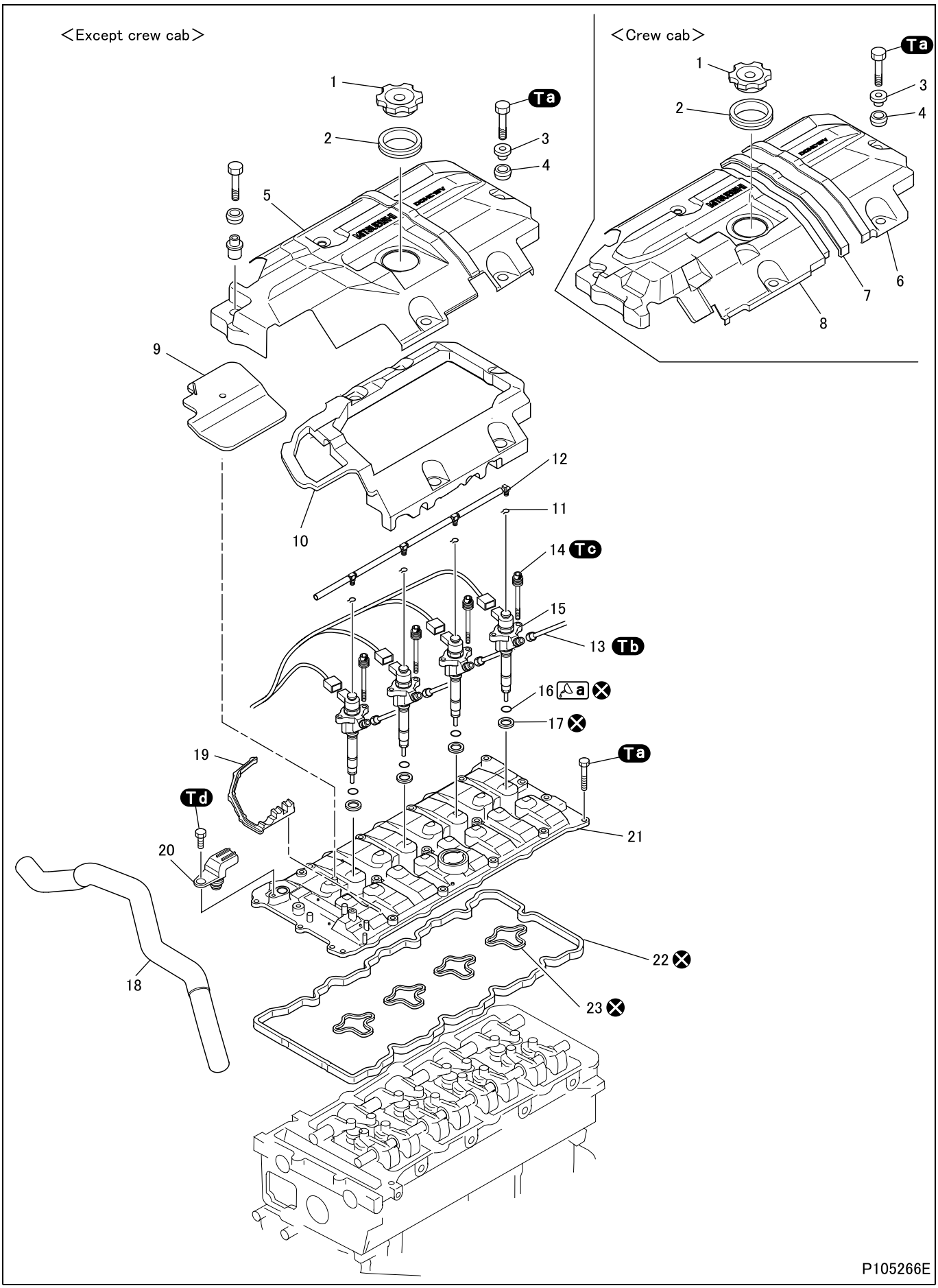

● Disassembly sequence

1 Oil filler cap
2 Grommet
3 Spacer
4 Insulator
5 Cover <Except crew cab>
6 Rear cover <Crew cab>
7 Rear cover gasket <Crew cab>
8 Front cover <Crew cab>
9 PCV hose spacer
10 Rocker cover rubber
11 Snap ring
12 Fuel return hose
13 Injection pipe
14 Bolt (with hexagonal hole)
15 Injector
16 O-ring
17 Tip gasket
18 PCV hose
19 Rubber seal
20 Cylinder sensor
21 Rocker cover
22 Rocker cover gasket A
23 Rocker cover gasket B

⊗: Non-reusable parts
PCV: Positive Crankcase Ventilation

● Assembly sequence

Follow the disassembly sequence in reverse.

Tightening torque (Unit: N·m {ft.lbs, kgf·m})

Mark	Parts to be tightened	Tightening torque	Remarks
Ta	Bolt (cover installation)	23.2 {17, 2.4}	–
	Bolt (rocker cover installation)		
	Bolt (PCV pipe installation)		
Tb	Injection pipe (union nut installation)	30.4 to 35 {22 to 26, 3.1 to 3.6}	–
Tc	Bolt (injector installation)	5.2 to 7.2 {3.8 to 5.3, 0.53 to 0.73}	–
Td	Bolt (cylinder sensor installation)	8 {5.9, 0.82}	–

Lubricant and/or sealant

Mark	Points of application	Specified lubricant and/or sealant	Quantity
a	O-ring	Engine oil	As required

◆Installation procedure◆

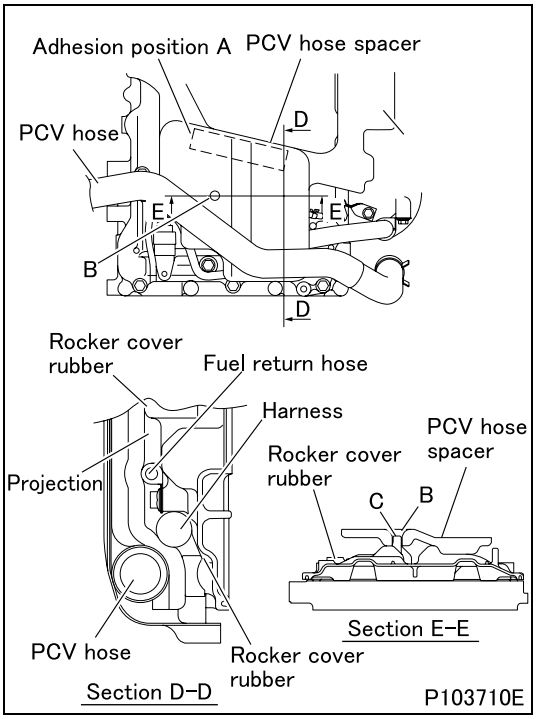

■ Installation: PCV hose spacer

- Apply a sheet of double-sided adhesive tape at the adhesion position A on the PCV hose spacer.
- Install the PCV hose spacer while aligning the hole B in the spacer with the projection C on the rocker cover rubber. Be careful not to crush the fuel return hose with the projection on the PCV hose spacer.

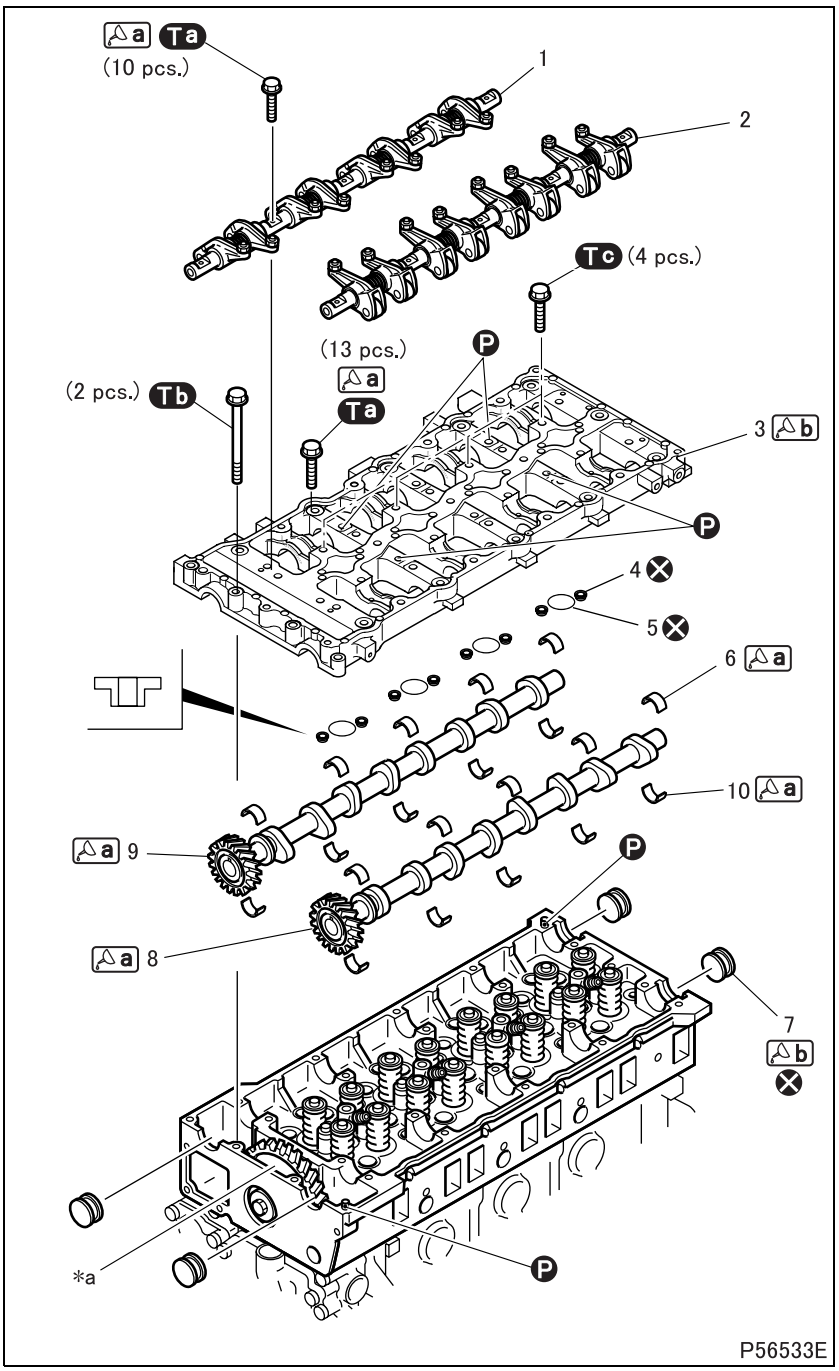

● Disassembly sequence

1 Exhaust rocker shaft
(See later sections.)
2 Intake rocker shaft
(See later sections.)
3 Camshaft frame
4 Gasket
5 O-ring
6 Upper camshaft bearing
7 Packing
8 Intake camshaft
(See later sections.)
9 Exhaust camshaft
(See later sections.)
10 Lower camshaft bearing

***a**: Head idler gear
Ⓟ: Locating pin
⊗: Non-reusable parts

CAUTION ⚠

- **The camshaft frame and cylinder head are manufactured as a matched set. Never replace the camshaft frame or the cylinder head individually.**
- **Do not change the upper and lower camshaft bearing combinations. Do not interchange the position of an upper and lower camshaft bearing set with that of another.**

● Assembly sequence

Follow the disassembly sequence in reverse.

Service standards (Unit: mm {in.})

Location	Maintenance item		Standard value	Limit	Remedy
–	Backlash	Head idler gear-to-camshaft gear	0.080 to 0.126 {0.0031 to 0.0050}	0.3 {0.012}	Replace
–	End play	Camshaft	0.10 to 0.20 {0.0039 to 0.0079}	0.3 {0.012}	Replace
6, 8, 10	Camshaft bearing-to-intake camshaft clearance		0.07 to 0.12 {0.0028 to 0.0047}	0.16 {0.024}	Replace
6, 9, 10	Camshaft bearing-to-exhaust camshaft clearance		0.07 to 0.12 {0.0028 to 0.0047}	0.16 {0.024}	Replace
6, 10	Camshaft bearing span (when free)		–	35.5 {1.40}	Replace

Tightening torque (Unit: N·m {ft.lbs, kgf·m})

Mark	Parts to be tightened	Tightening torque	Remarks
Ta	Bolt (rocker shaft installation: 10 places)	27 {20, 2.8}	Wet
	Bolt (camshaft frame installation: 13 places)		
Tb	Bolt (camshaft installation: 2 places)	23.5 {17, 2.4}	–
Tc	Bolt (camshaft frame installation: 4 places)	23.2 {17, 2.4}	–

Lubricant and/or sealant

Mark	Points of application	Specified lubricant and/or sealant	Quantity
a	Bolt threads and seat	Engine oil	As required
	Camshaft bearing inner surface		
	Camshaft journals and cams		
b	Cylinder head mounting surface of camshaft frame	ThreeBond 1217H	As required
	Entire periphery of packing		

Special tools

Mark	Tool name and shape	Part No.	Application
a	Rocker shaft set tool 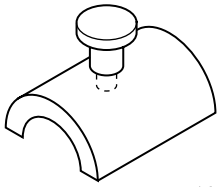 P103819	MH063861	Installation of rocker shaft

◆Work before removal◆

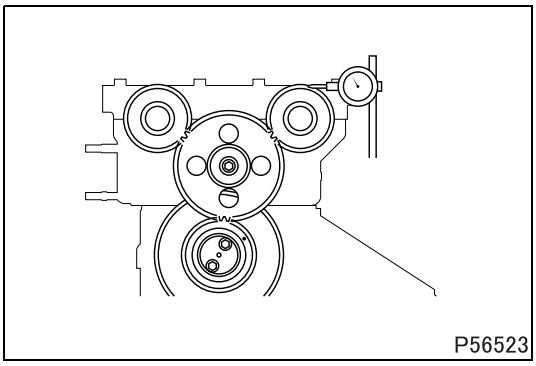
P56523

■ **Inspection: Backlash between gears**

- Measure the backlash at three or more locations for each pair of gears.
- If any of the measurements exceeds the specified limit, replace the defective part(s).

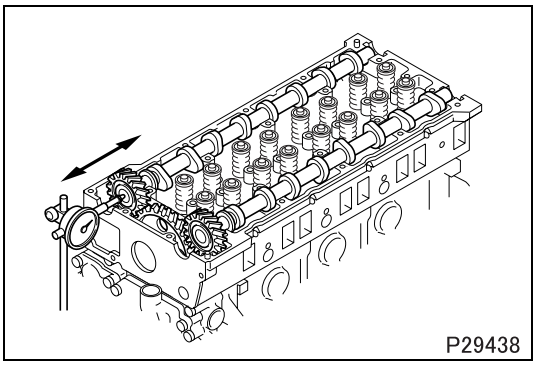
P29438

■ **Inspection: Camshaft end play**

- If the end play exceeds the specified limit, replace the defective part(s).

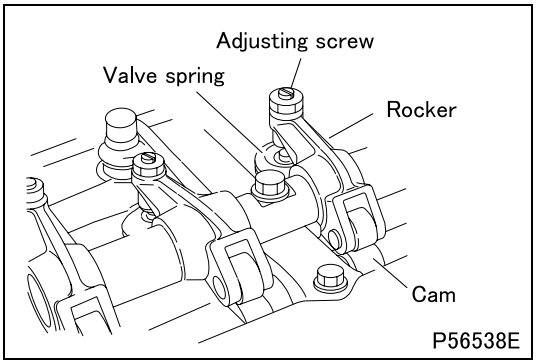

■ **Releasing valve spring tension**

- Before removing the bolts in the next process, loosen the adjusting screws on the rockers whose valve springs are compressed (due to the cams lifting these rockers). This operation is necessary to release the tension in the valve springs, thus preventing other parts from undue forces when the bolts are removed.

◆Removal procedure◆

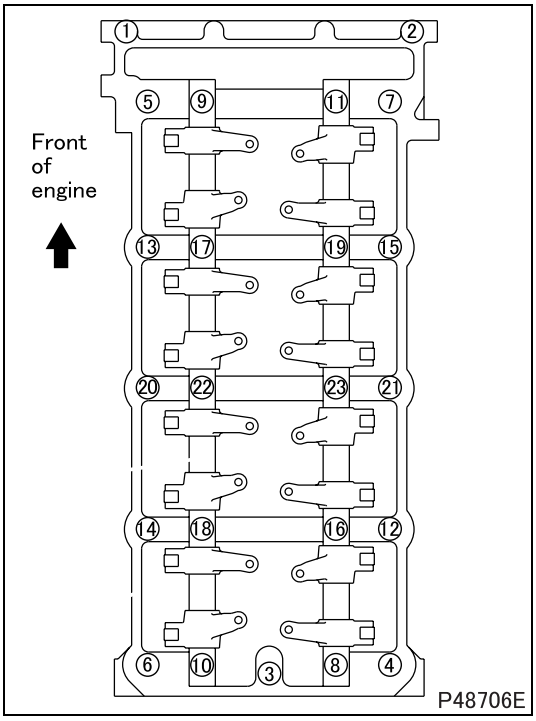

■ **Removal: Rocker shafts and camshaft frame**

- Loosen the rocker shaft installation bolts (10 places) and the camshaft frame installation bolts (13 places) in several passes in the order indicated in the illustration (1 to 23). Then, remove the rocker shafts and the camshaft frame.

◆Inspection procedure◆

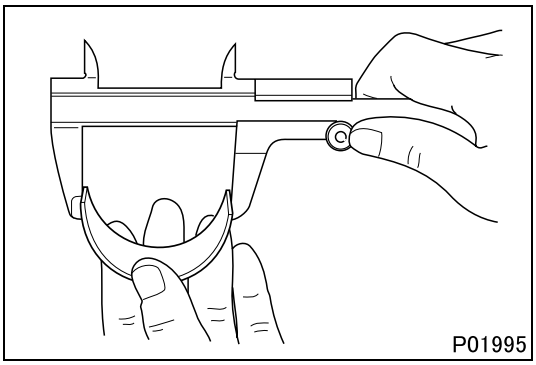

■ **Inspection: Camshaft bearing free span**

CAUTION ⚠

- **Do not force the bearings open.**

- If the measurement is less than the limit, replace upper and lower bearings as a set.

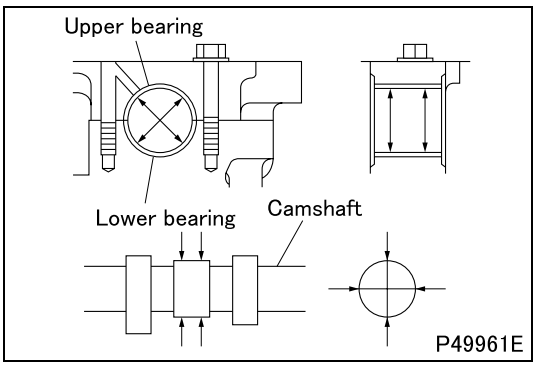

■ **Inspection: Camshaft bearing-to-camshaft clearance**

- If the measurement is not within the standard value range, replace the defective part(s).

◆Installation procedure◆

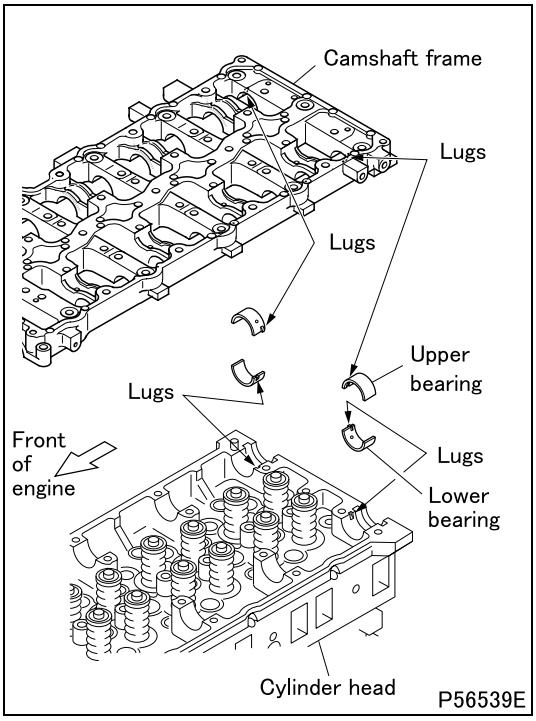

■ **Installation: Camshaft**

- Install the upper camshaft bearing on the camshaft frame and the lower camshaft bearing on the cylinder head by fitting their lugs into the notches in the camshaft frame and cylinder head.

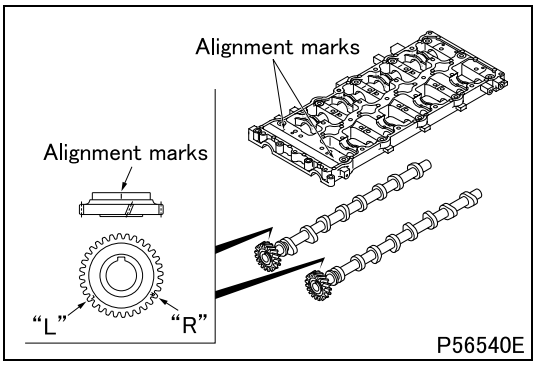

- Place the No. 1 cylinder piston at the top dead center on the compression stroke.
- Align the mating marks on the camshaft gears with those on the camshaft frame when installing the camshafts.
- Each camshaft gear also has mating mark "L" or "R" for alignment with the head idler gear. This mark may not be exactly aligned with that on the head idler gear, as the position that the head idler gear takes when it is installed may make it impossible to align them. Such a misalignment does not lead to any undesirable consequences.

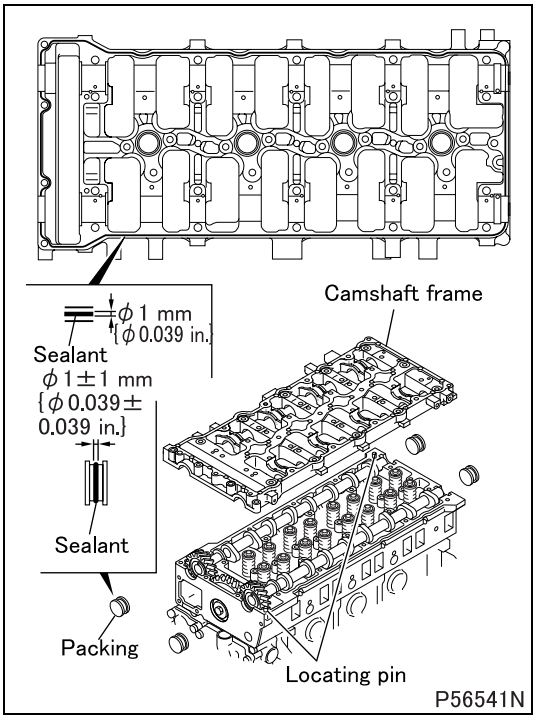

■ **Installation: Rocker shafts and camshaft frame**

- Clean the sealant application surfaces on each part.
- Apply sealant to the entire periphery of the four packings evenly and without any breaks.
- Apply sealant to the camshaft frame evenly and without any breaks.
- Mount the camshaft frame and packing on the cylinder head within three minutes of applying the sealant, being careful not to dislodge the sealant in the process.

CAUTION ⚠

- **Do not run the engine within one hour of installing the rocker shafts and camshaft frame.**

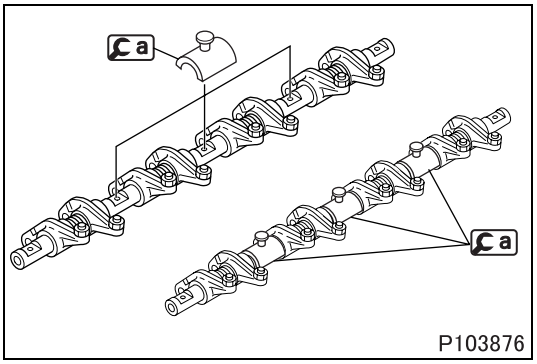

- Install a on the rocker shafts to prevent the rocker arms from moving away from each other.

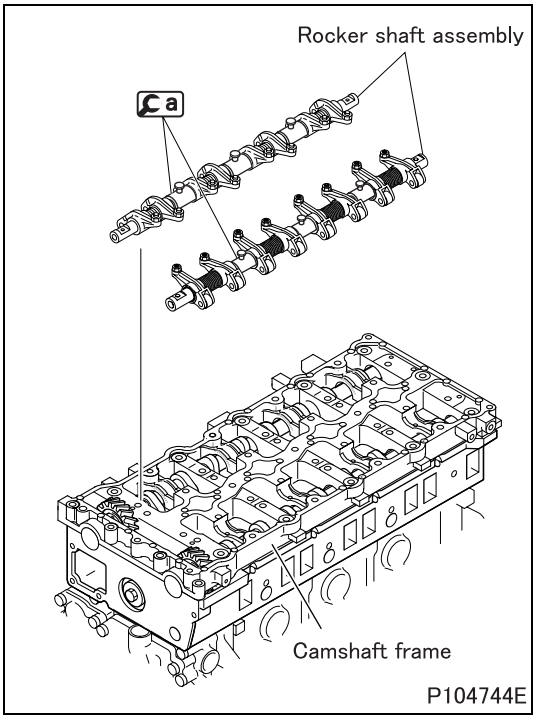

- Set the rocker shafts to the camshaft frame and then remove a.

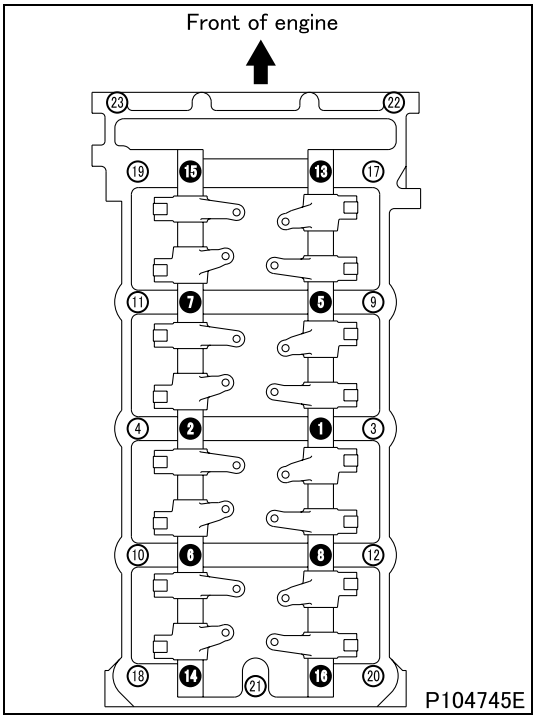

- Tighten the bolts (1 to 23) to the specified torque in the order indicated in the illustration.
  White numbered bolts are to tighten both the camshaft frame and rocker shaft.

CAUTION ⚠

- **Reapply sealant to the areas specified above if any of the bolts is loosened or removed after the rocker shafts and camshaft frame are installed.**

Rocker Shafts and Rockers

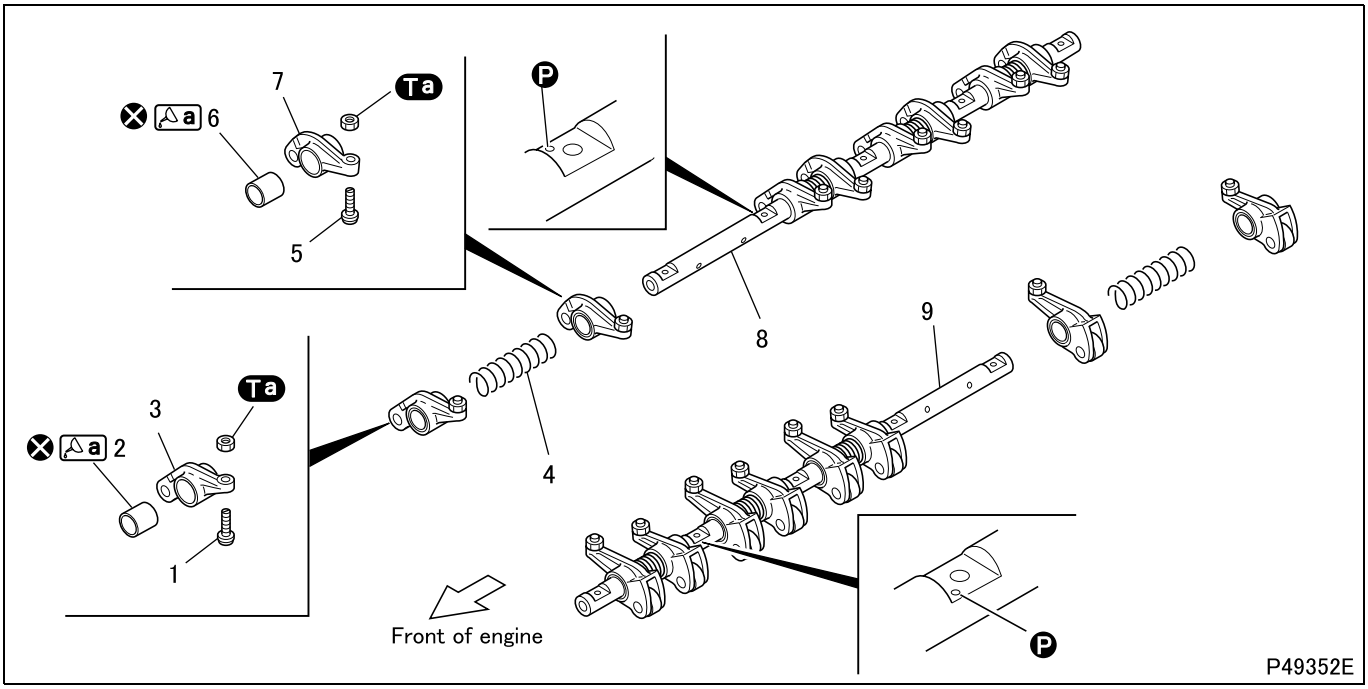

● **Disassembly sequence**

1 Adjusting screw
2 Rocker bushing
3 Short rocker
4 Rocker shaft spring
5 Adjusting screw
6 Rocker bushing
7 Long rocker
8 Exhaust rocker shaft
9 Intake rocker shaft

Ⓟ: Hole for camshaft frame locating pin
⊗: Non-reusable parts

● **Assembly sequence**

Follow the disassembly sequence in reverse.

CAUTION ⚠

- **The short rockers and long rockers must be installed alternately. Be aware that the order of installation for the intake rockers is different from the order of installation for the exhaust rockers.**

Service standards (Unit: mm {in.})

Location	Maintenance item	Standard value	Limit	Remedy
2, 6, 8, 9	Rocker bushing-to-rocker shaft clearance	0.01 to 0.08 {0.00039 to 0.0031}	0.12 {0.0047}	Replace
3, 7	Rocker (roller) radial play	0.038 to 0.100 {0.0015 to 0.0039}	–	Replace

Tightening torque (Unit: N·m {ft.lbs, kgf·m})

Mark	Parts to be tightened	Tightening torque	Remarks
Ta	Lock nut (adjusting screw stopping)	21 {15.5, 2.1}	–

Lubricant and/or sealant

Mark	Points of application	Specified lubricant and/or sealant	Quantity
a	Rocker bushing inner surface	Engine oil	As required

Special tools (Unit: mm {in.})

Mark	Tool name and shape	Part No.	Application
Ca	Rocker bushing puller A: φ22 {φ0.87} B: φ24.5 {φ0.96} 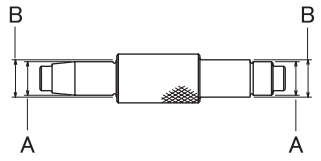 P29932	MH062536	Removal and installation of rocker bushing

◆Inspection procedure◆

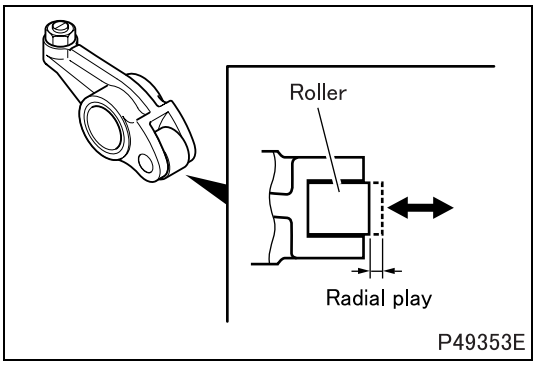

P49353E

■ Inspection: Rocker (roller) radial clearance

- Replace the rocker if the radial play measurement is not within the standard value range.

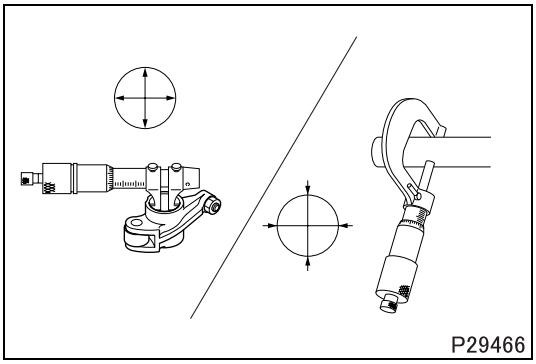
P29466

■ Inspection: Rocker bushing-to-rocker shaft clearance

- Replace the bushing if the measurement exceeds the specified limit.

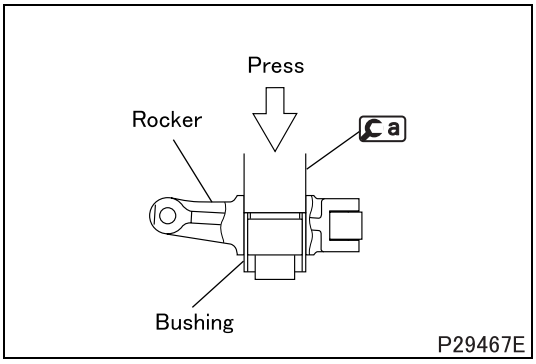

P29467E

Replacement of rocker bushing
[Removal]

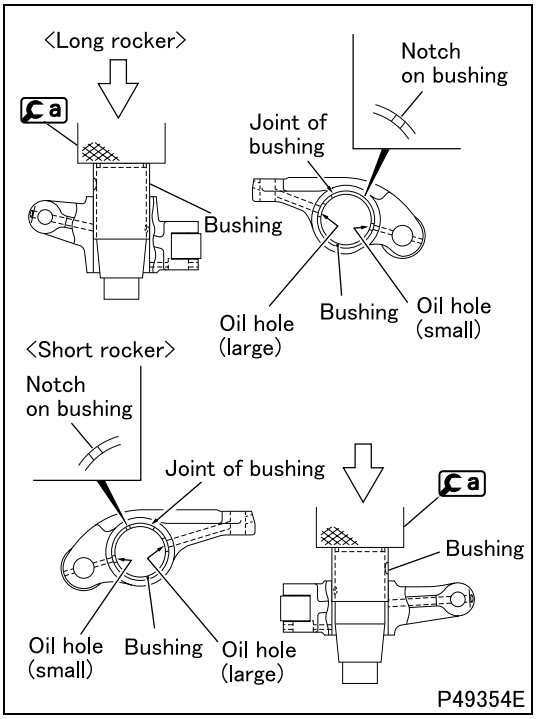

[Installation]

- Press-fit each rocker bushing in the rocker with its ends facing in the illustrated directions.

M E M O

Camshafts

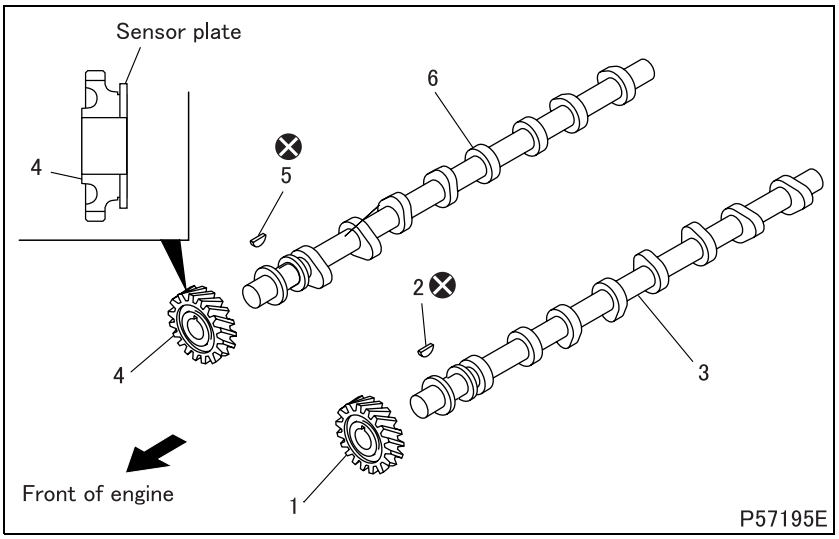

● **Disassembly sequence**

1 Intake camshaft gear
2 Key
3 Intake camshaft
4 Exhaust camshaft gear
5 Key
6 Exhaust camshaft

⊗: Non-reusable parts

● **Assembly sequence**

Follow the disassembly sequence in reverse.

CAUTION ⚠

- **The exhaust camshaft gear has the sensor plate. Do not mistake it for the intake camshaft gear. If the gears are incorrectly installed, engine malfunction will occur.**

Service standards (Unit: mm {in.})

Location	Maintenance item			Standard value	Limit	Remedy
1, 3, 4, 6	Camshaft gear-to-camshaft interference			0.007 to 0.041 {0.00028 to 0.0016}	–	Replace
3	Intake camshaft	Cam lift	Cams for long rockers	7.219 {0.284}	–	Replace
			Lobe height: 42.219 {1.66} Base circle diameter: 35 {1.38}			
			Cams for short rockers	9.281 {0.365}	–	
			Lobe height: 44.281 {1.74} Base circle diameter: 35 {1.38}			
		Bend		0.01 {0.00039}	0.03 {0.0012}	Replace
6	Exhaust camshaft	Cam lift	Cams for long rockers	7.111 {0.279}	–	Replace
			Lobe height: 42.279 {1.66} Base circle diameter: 35.168 {1.39}			
			Cams for short rockers	9.148 {0.36}	–	
			Lobe height: 44.359 {1.75} Base circle diameter: 35.211 {1.39}			
		Bend		0.01 {0.00039}	0.03 {0.0012}	Replace

◆Removal procedure◆

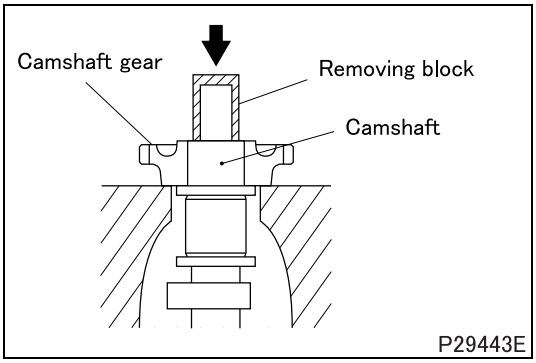

■ **Removal: Camshaft gears**

- Remove the camshaft gear by pushing on the camshaft using a press.

CAUTION ⚠

- **Do not use a hammer to remove the camshaft gear. Be sure to use a press for this purpose.**

◆Inspection procedure◆

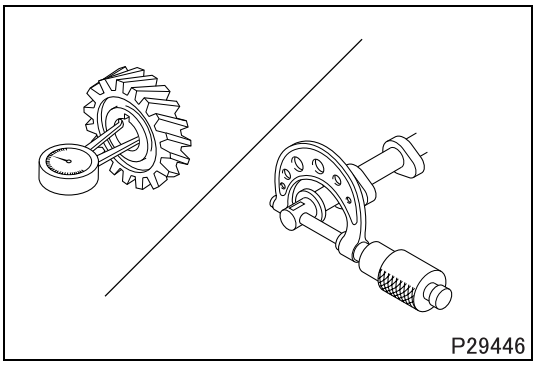

■ **Inspection: Camshaft gear-to-camshaft interference**

- If the measurement is not within the standard value range, replace the defective part(s).

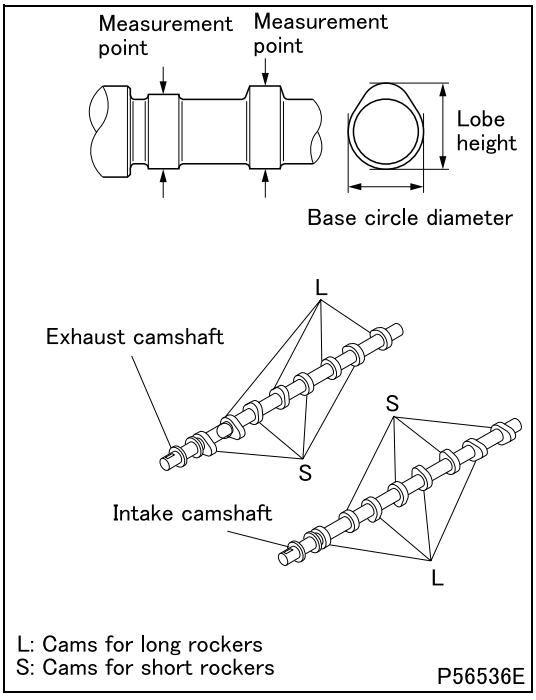

■ **Inspection: Camshaft**

(1) Cam lift

- Replace the camshaft if the difference between the cam lobe height and base circle diameter measurements is less than the specified limit.

CAUTION ⚠

- **The cams for the long rockers (L) are different from the cams for the short rockers (S).**

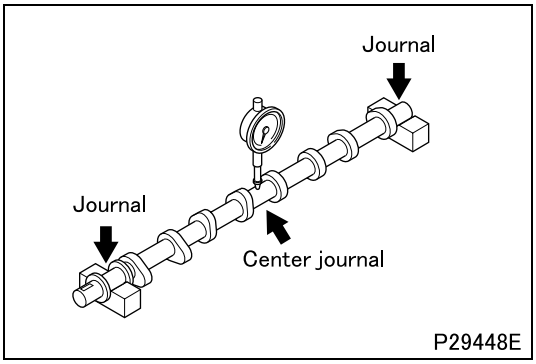

(2) Bend

- Place supports under the journals at the ends of the camshaft and measure the bend of the camshaft at the central journal. The amount of camshaft bend is obtained by giving the camshaft one turn and dividing the dial gauge reading by two.
- If the measurement exceeds the specified limit, replace the camshaft.

◆Installation procedure◆

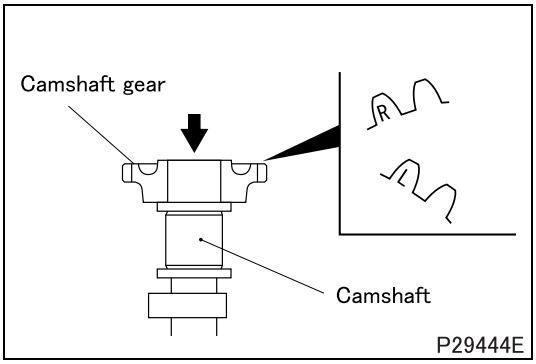

■ Installation: Camshaft gears

- Heat the camshaft gears to approximately 150°C {302°F} with a gas burner.

WARNING ⚠

- **You may burn yourself if you touch the heated gear.**

- Install the camshaft gear on the camshaft with a mating mark (“R” or “L”) facing in the illustrated direction.
- Press the gear until its end comes in close contact with the flange on the camshaft.

M E M O

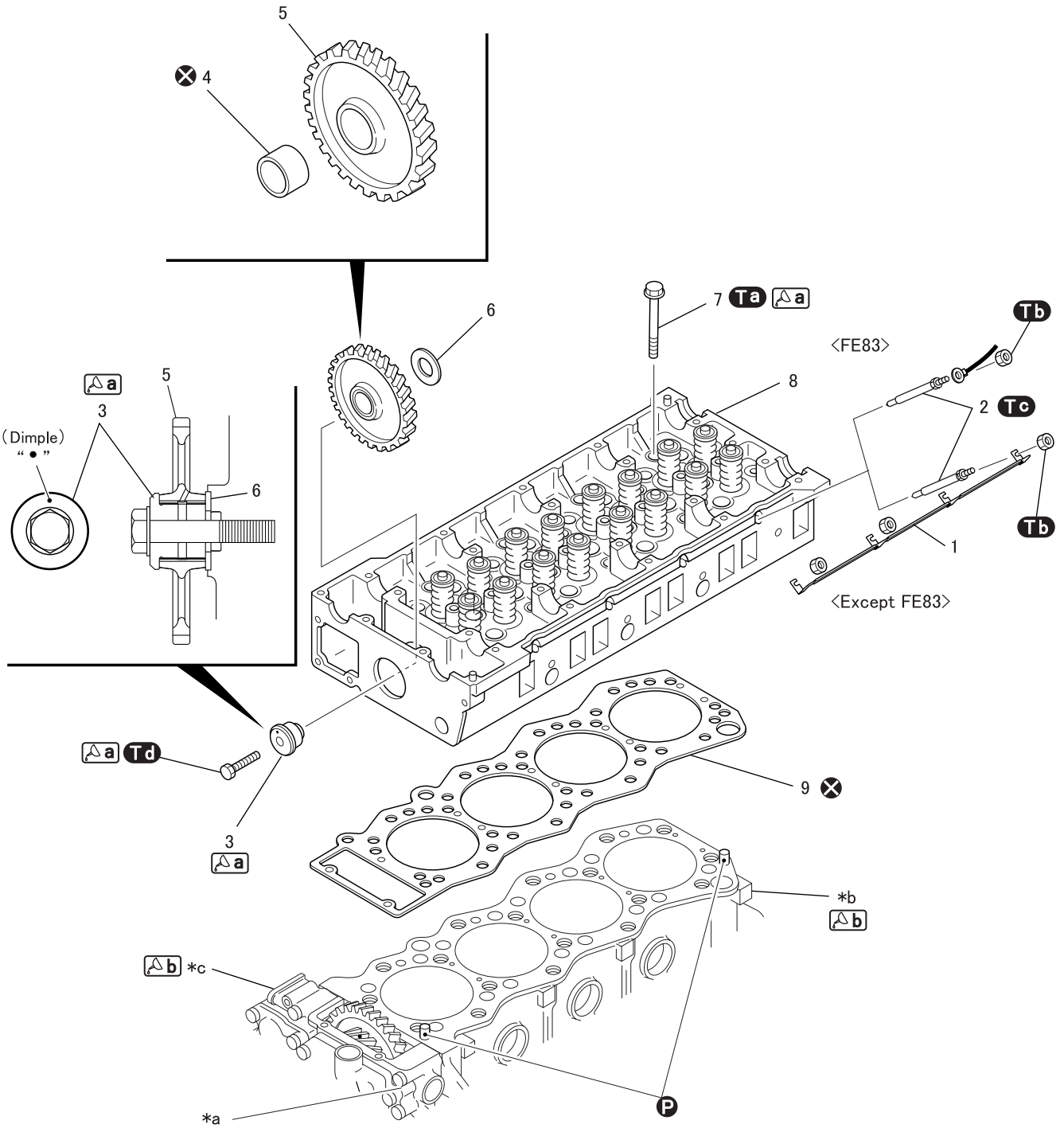
5
4
6
7 Ta a
Tb
<FE83>
8
2 Tc
a
3
5
(Dimple)
" ● "
6
Tb
1
<Except FE83>
a Td
9
3 a
*b b
b *c
*a
P

P103770E

● **Disassembly sequence**

1 Connection plates <Except FE83>
2 Glow plug
3 Head idler shaft
4 Head idler gear bushing
5 Head idler gear
6 Thrust plate
7 Cylinder head bolt
8 Cylinder head (See later sections.)
9 Cylinder head gasket

***a**: Idler gear
***b**: Upper crankcase
***c**: Front case
Ⓟ: Locating pin
⊗: Non-reusable parts

CAUTION ⚠

- **Be careful not to damage the glow plugs and injectors when placing the cylinder head on the worktable, as they are protruding out of the bottom of the cylinder head.**

● **Assembly sequence**

Follow the disassembly sequence in reverse.

CAUTION ⚠

- **The cylinder head bolts are tightened using the torque-turn method. Any cylinder head bolt that has three marks indicating that the bolt has been tightened three times already must be replaced with a new one.**
- **Do not forget to install the thrust plate.**

Service standards (Unit: mm {in.})

Location	Maintenance item	Standard value	Limit	Remedy
–	Backlash between head idler gear and idler gear	0.103 to 0.158 {0.0041 to 0.0062}	0.3 {0.012}	Replace
–	Head idler gear end play	0.1 to 0.2 {0.0039 to 0.0079}	0.3 {0.012}	Replace
3, 4	Head idler shaft-to-head idler gear bushing clearance	0.01 to 0.05 {0.00039 to 0.0020}	0.1 {0.0039}	Replace

Tightening torque (Unit: N·m {ft.lbs, kgf·m})

Mark	Parts to be tightened	Tightening torque	Remarks
Ta	Cylinder head bolt	147 {110, 15} + 90°	Wet Reusable up to 3 times
Tb	Nut (connection plate installation)	1.0 to 1.5 {0.7 to 1.1, 0.1 to 0.15}	–
Tc	Glow plug	19.6 to 24.5 {14 to 18, 2 to 2.5}	–
Td	Bolt (head idler shaft installation)	54.9 {40, 5.6}	Wet

Lubricant and/or sealant

Mark	Points of application	Specified lubricant and/or sealant	Quantity
a	Bolt (head idler gear installation) threads and seating surface under head	Engine oil	As required
	Head idler shaft outer peripheral surface		
	Cylinder head bolt threads		
b	Top surfaces of joints between upper crankcase and front case	ThreeBond 1207C	As required

Special tools (Unit: mm {in.})

Mark	Tool name and shape	Part No.	Application
a	Idler gear bushing puller A: φ32 {φ1.26}, B: φ35 {φ1.38} 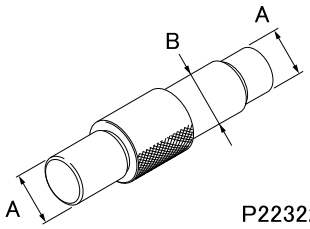 P22322	MH061779	Removal and installation of idler gear bushing

◆Inspection before removal◆

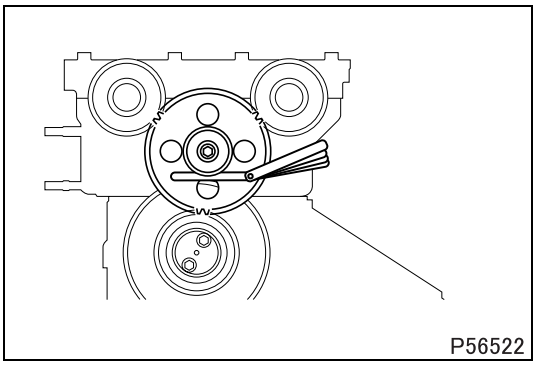
P56522

■ **Inspection: Head idler gear end play**

- If the measurement exceeds the specified limit, replace the defective part(s).

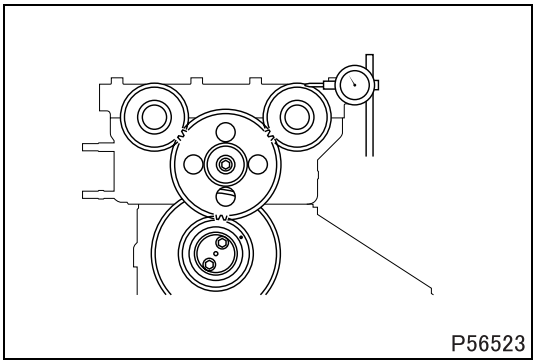
P56523

■ **Inspection: Backlash between gears**

- Measure the backlash at three or more locations for each pair of gears.
- If any of the measurements exceeds the specified limit, replace the defective part(s).

◆Removal procedure◆

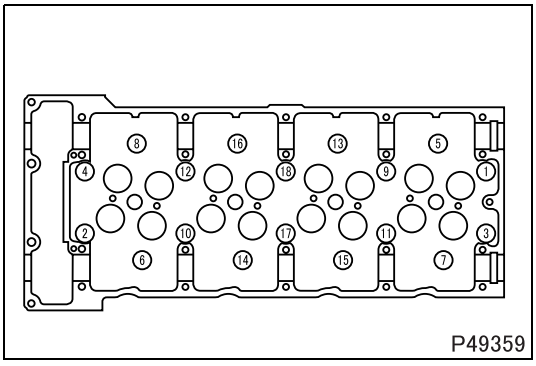

P49359

■ **Removal: Cylinder head**

- Loosen the cylinder head bolts (1 to 18) in several passes in the order indicated in the illustration and remove the cylinder head.

■ **Removal: Cylinder head gasket**

CAUTION ⚠

- **When removing the cylinder head gasket, be careful not to scratch the cylinder head, the upper crankcase and the front case.**

◆Inspection procedure◆

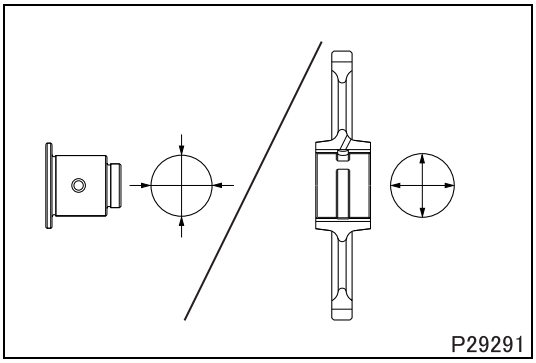

■ **Inspection: Head idler shaft-to-head idler gear bushing clearance**

- Replace the bushing if the measurement exceeds the specified limit.

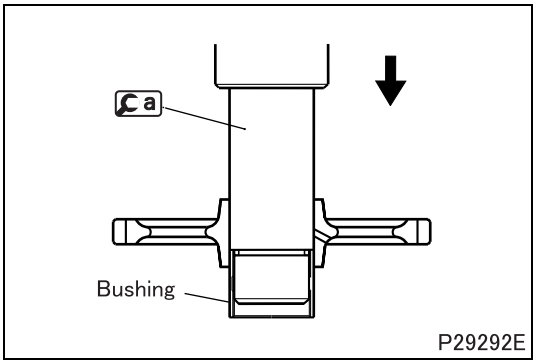

Replacement of head idler gear bushing
[Removal]

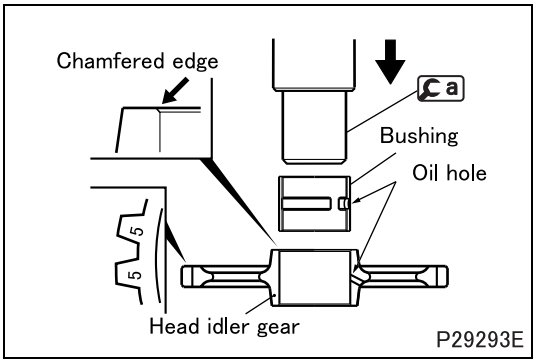

[Installation]

- Position the bushing on the head idler gear with their ends facing the illustrated directions and their oil holes on the same line.
- Using a, press the bushing into the head idler gear until it is flush with the lower edge of the chamfer on the head idler gear.
- Remeasure the clearance between the bushing and head idler shaft.
- Ream the bushing if the measurement is less than the standard value.

◆Installation procedure◆

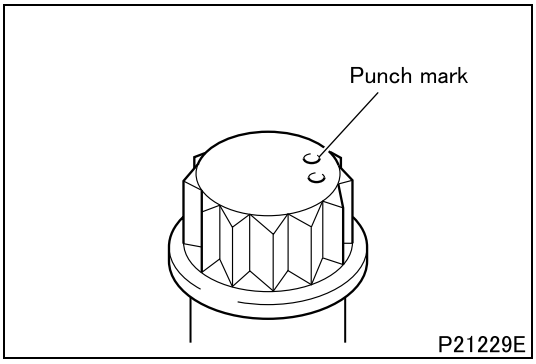

■ **Installation: Cylinder head**

CAUTION ⚠

- **Before fitting the cylinder head bolts, check the punch marks on each bolt's head. Do not use the bolt if there are three punch marks.**
- **The punch marks indicate the number of times each bolt has been tightened using the torque-turn tightening method. Any bolt that already has three punch marks must be replaced.**

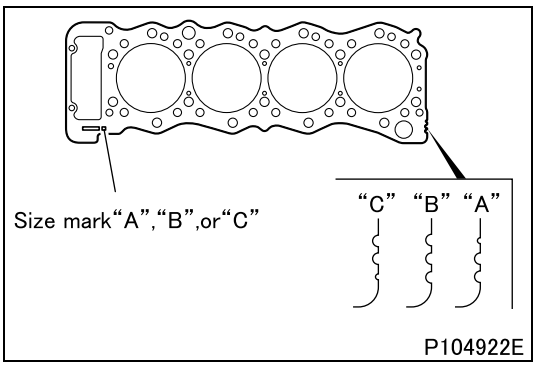

- The cylinder head gasket comes in three sizes. Choose the gasket appropriate for the cylinder head by the following procedure.
  - Measure the amount of piston projection for every cylinder. (See “**PISTONS, CONNECTING ROD AND CYLINDER LINERS**” section.)
  - Select a cylinder head gasket with the appropriate thickness for the average of the piston projection measurements from the table below.
  - If any of the piston projection measurements is more than 0.05 mm {0.0020 in.} larger than the average value, then use the gasket one class higher than that class (A→B, B→C).

Unit: mm {in.}

Piston projection	Cylinder head gasket	
	Size	Thickness when tightened
–0.088 to –0.027 {–0.0035 to –0.0011}	“A”	0.75 ± 0.03 {0.030 ± 0.0012}
–0.027 to 0.033 {–0.0011 to 0.0013}	“B”	0.80 ± 0.03 {0.031 ± 0.0012}
0.033 to 0.094 {0.0013 to 0.0037}	“C”	0.85 ± 0.03 {0.033 ± 0.0012}

- The size class of the cylinder head gasket can be determined from the size mark or the shape of the notches cut on the gasket edge.

CAUTION ⚠

- **Replacement of the piston or connecting rod alters the piston projection. Always measure the amount of piston projection after either or both of them are replaced.**

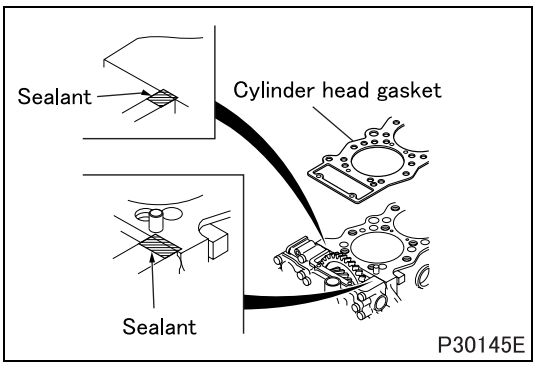

- Clean the sealant application surfaces of each part.
- Apply sealant to the top surfaces of the joints between the upper crankcase and front case (at two places).
- Install the cylinder head and its gasket on the upper crankcase within three minutes of applying the sealant, being careful not to dislodge the sealant.

CAUTION ⚠

- **Do not run the engine within one hour of mounting the cylinderhead. If any cylinder head bolts are loosened or removed, be sure to reapply sealant to the surfaces specified above.**

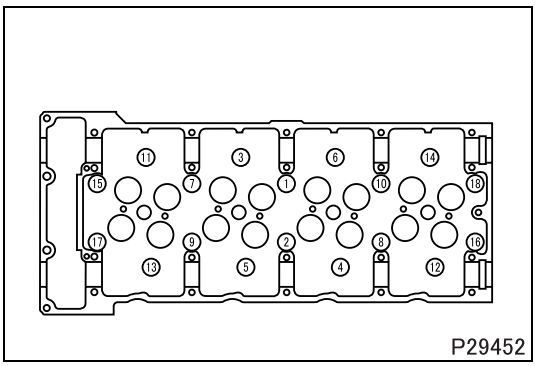

- Tighten the cylinder head bolts (1 to 18) to a torque of 147 N·m {110 ft.lbs, 15 kgf·m} (wet) in the order indicated in the illustration. Then, tighten them further by 90° in the same order.
- After tightening each bolt, make a punch mark on the head of the bolt to indicate the number of times that it has been used.

CAUTION ⚠

- **Cylinder head bolts that have been tightened using the torque-turn method must never be additionally tightened after the final angular tightening.**

M E M O

CYLINDER HEAD AND VALVE MECHANISM

Cylinder Head

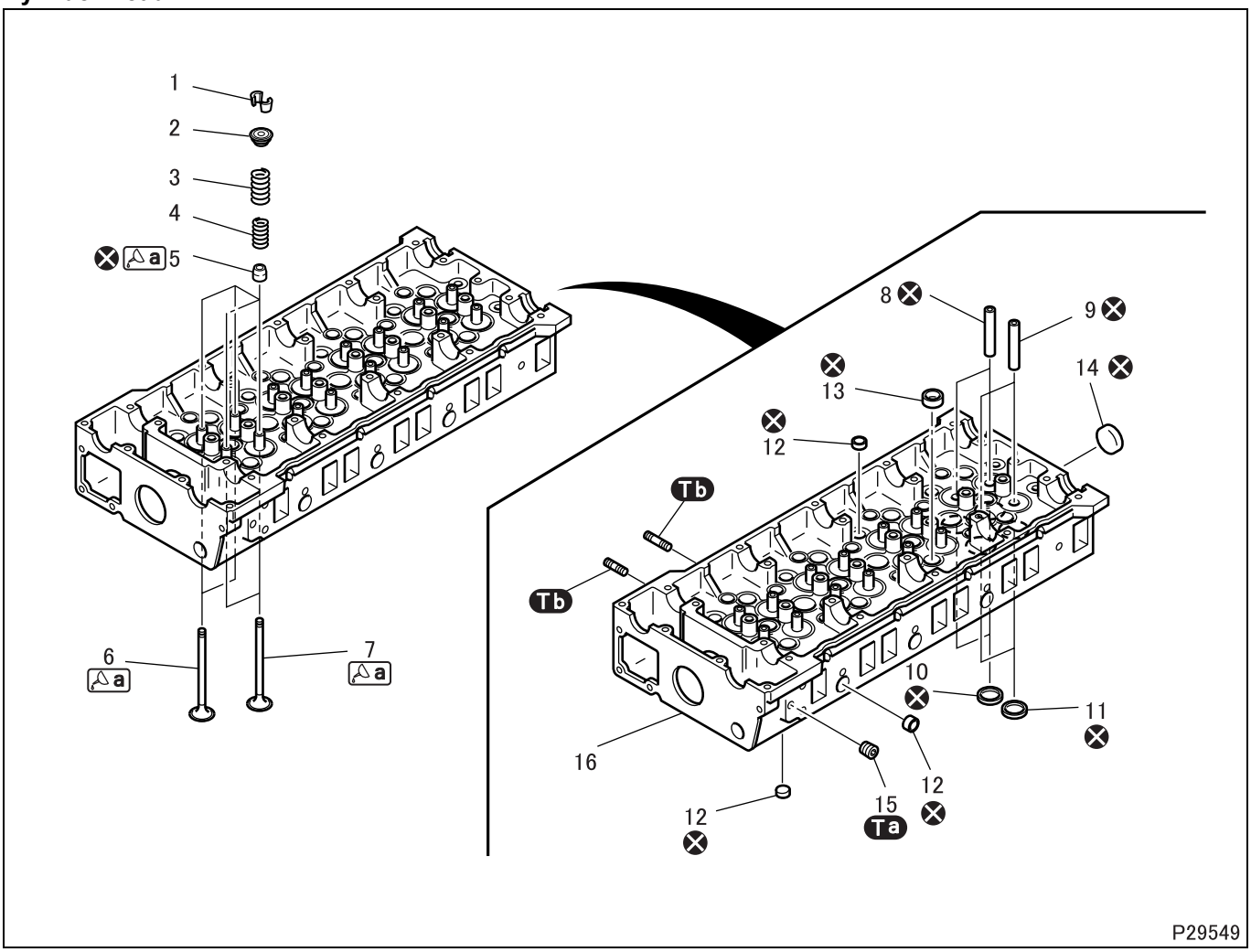

● **Disassembly sequence**

1 Valve cotter
2 Upper retainer
3 Outer valve spring
4 Inner valve spring
5 Valve stem seal
6 Exhaust valve
7 Intake valve
8 Exhaust valve guide
9 Intake valve guide
10 Exhaust valve seat
11 Intake valve seat
12 Sealing cap (diameter: 22 mm {0.87 in.})
13 Sealing cap (diameter: 30 mm {1.18 in.})
14 Sealing cap (diameter: 40 mm {1.57 in.})
15 Taper plug
16 Cylinder head

⊗: Non-reusable parts

● **Assembly sequence**

Follow the disassembly sequence in reverse.

CAUTION ⚠

- **When an intake valve or exhaust valve have been removed, make sure to replace the valve stem seal.**

Service standards (Unit: mm {in.})

Location	Maintenance item		Standard value	Limit	Remedy
3	Outer valve spring	Free length	87.8 {3.46}	83.4 {3.28}	Replace
		Installed load (57 {2.24} in installed length)	360 ± 18 N {81 ± 4.0 lbs, 36.7 ± 1.8 kgf}	–	
		Squareness	–	2.0 {0.079}	
4	Inner valve spring	Free length	78.8 {3.10}	74.9 {2.95}	Replace
		Installed load (52.3 {2.06} in installed length)	168 ± 8.4 N {38 ± 1.9 lbs, 17.1 ± 0.9 kgf}	–	
		Squareness	–	2.0 {0.079}	
6	Exhaust valve	Stem outside diameter	$\phi 8\ ^{-0.060}_{-0.075}$ {$\phi 0.31\ ^{-0.0024}_{-0.0030}$}	ϕ7.85 {ϕ0.31}	Replace
		Sinkage from cylinder head bottom surface	1.5 ± 0.25 {0.059 ± 0.0098}	2.0 {0.079}	Replace
		Valve margin	1.5 {0.059}	1.2 {0.047}	Replace
		Seat angle	45° ± 15'	–	Reface
6, 8	Exhaust valve stem-to-valve guide clearance		0.07 to 0.10 {0.0028 to 0.0039}	0.2 {0.0079}	Replace
7	Intake valve	Stem outside diameter	$\phi 8\ ^{-0.025}_{-0.040}$ {$\phi 0.31\ ^{-0.00098}_{-0.0016}$}	ϕ7.85 {ϕ0.31}	Replace
		Sinkage from cylinder head bottom surface	1.5 ± 0.25 {0.059 ± 0.0098}	2.0 {0.079}	Replace
		Valve margin	1.5 {0.059}	1.2 {0.047}	Replace
		Seat angle	45° ± 15'	–	Reface
7, 9	Intake valve stem-to-valve guide clearance		0.03 to 0.06 {0.0012 to 0.0024}	0.2 {0.0079}	Replace
10	Exhaust valve seat width		2.5 ± 0.2 {0.098 ± 0.0079}	3.5 {0.14}	Replace
11	Intake valve seat width		2 ± 0.2 {0.079 ± 0.0079}	2.8 {0.11}	Replace
16	Cylinder head	Bottom surface distortion	0.05 {0.0020}	0.2 {0.0079}	Correct or replace
		Height from top surface to bottom surface	107 ± 0.05 {4.21 ± 0.0020}	106.5 {4.19}	Replace
		Valve seat hole diameter	$\phi 38\ ^{+0.025}_{0}$ {$\phi 1.50\ ^{+0.0098}_{0}$}	–	Replace

Tightening torque (Unit: N·m {ft.lbs, kgf·m})

Mark	Parts to be tightened	Tightening torque	Remarks
Ta	Tapered plug	14 {10, 1.4}	–
Tb	Stud	20 {15, 2.0}	–

Lubricant and/or sealant

Mark	Points of application	Specified lubricant and/or sealant	Quantity
a	Lip of valve stem seal	Engine oil	As required
	Valve stem and valve end		

Special tools (Unit: mm {in.})

Mark	Tool name and shape	Part No.	Application
a	Valve lifter 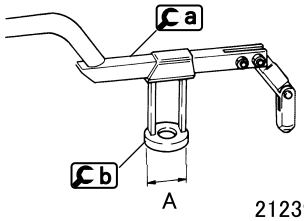 21239	MH061668	Removal and installation of valve cotters
b	Valve lifter seat A: φ38 {φ1.50}	MH061772	
c	Valve lifter hook 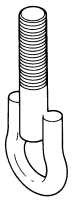 21240	MH061679	
d	Valve stem seal installer A: φ26.5 {φ1.04}; B: φ14.7 {φ0.58}; C: φ8 {φ0.31} 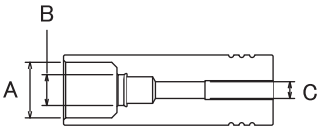 P29931	MH063607	Installation of valve stem seals
e	Valve lapper 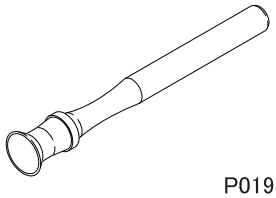 P01958	30091-07500	Lapping valves and valve seats
f	Valve guide remover A: φ8 {φ0.31}; B: φ12 {φ0.47} 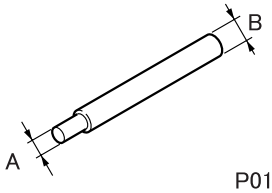 P01959	31391-10500	Removal of valve guides
g	Valve guide installer A: φ25.5 {φ1.00}; B: φ13 {φ0.51}; C: 29 {1.14} 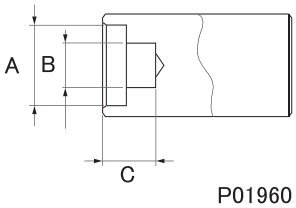 P01960	MH063604	Installation of valve guides
h	Caulking tool body A: φ8 {φ0.31}	31391-13100	Installation of valve seat
i	Installer ring B: φ38 {φ1.50} 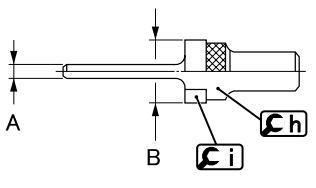 P01961B	MH063605	

◆Removal procedure◆

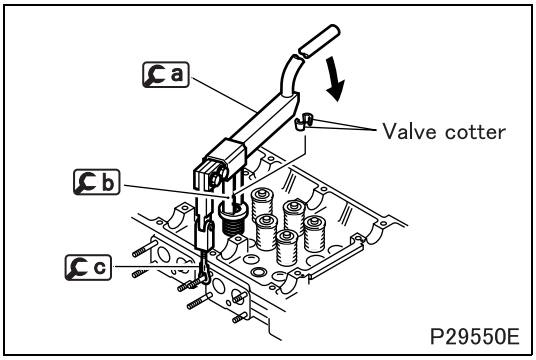

■ **Removal: Valve cotters**

- Remove the valve cotters by evenly compressing the valve springs.

◆Inspection procedure◆

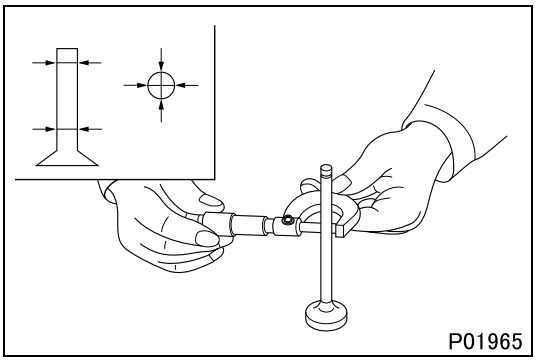

■ **Inspection: Intake valves and exhaust valves**

- If a valve is corrected or replaced with a new one as a result of the following inspection, make sure to lap the valve and valve seat.

(1) Inspection of valve stem

- Replace the valve if the stem's outside diameter is below the limit or is severely worn.

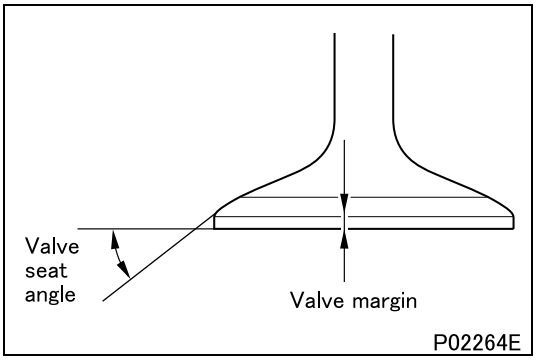

(2) Valve seat angle

- Reface or replace the valve if the measured valve is not within the standard value range.

(3) Valve margin

- Reface or replace the valve if the measured valve exceeds the specified limit.

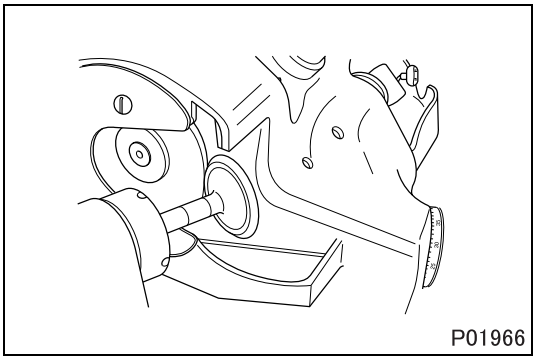

Refacing

- Limit grinding to a necessary minimum.
- If the valve margin is below the limit after grinding, replace the valve.
- After grinding, make sure to lap the valve and valve seat.

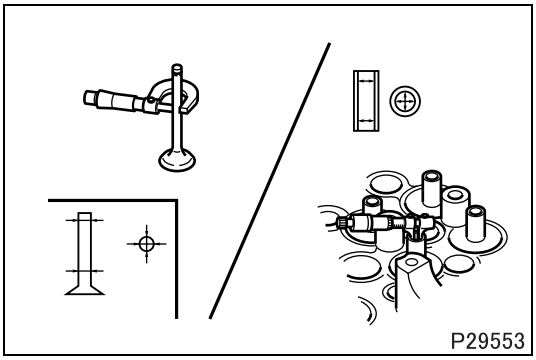

■ **Inspection: Valve-to-valve guide clearance**

- If the clearance exceeds the specified limit, replace the defective part(s).

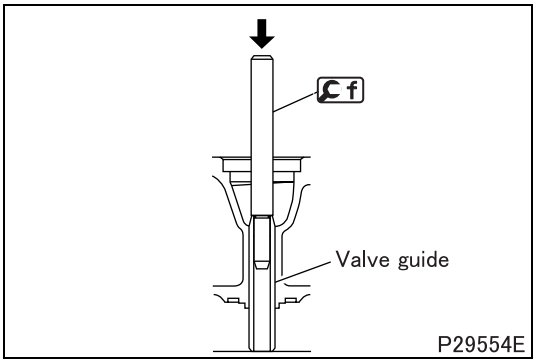

Replacement of valve guides
[Removal]

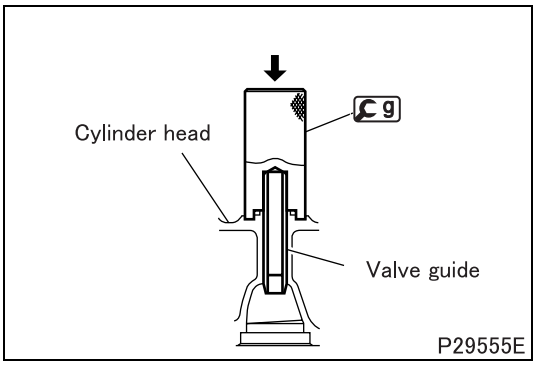

[Installation]

- Install the valve guide until g sits snugly on the cylinder head.

CAUTION ⚠

- **The valve guides must be pressed to the specified depth. Be sure to use g for this operation.**
- **Exhaust valve guides are longer than intake valve guides. Make sure to install the correct type of guide in each location.**

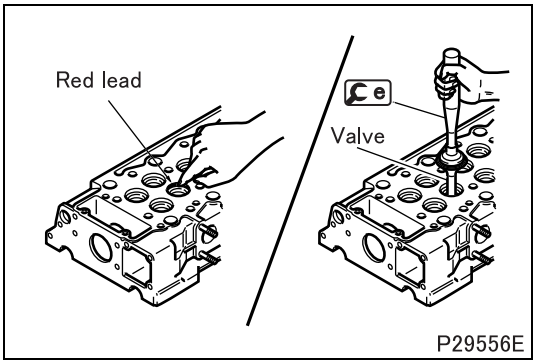

■ **Inspection: Contact between valve and valve seat**

- Before starting inspection, check that the valve and valve guide are intact.
- Apply an even coat of red lead to the valve contact surface of the valve seat.
- Strike the valve once against the valve seat. Do not rotate the valve during this operation.

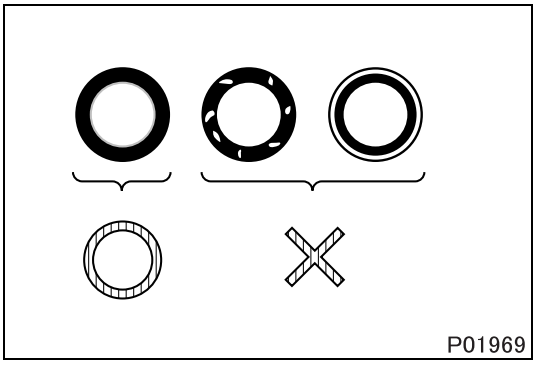

- If the red lead deposited on the valve indicates a poor contact pattern, take either of the following corrective actions.

	Corrective action
Minor defect	Lapping
Serious defect	Reface or replace valve and valve seat

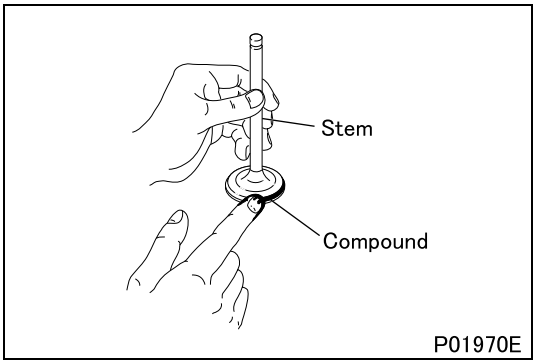

Lapping

- Perform the valve lapping in the following procedure.
- Apply a thin coat of lapping compound to the seat contact surface of the valve.
- Start with an intermediate-grit compound (120 to 150 grit) and finish with a fine-grit compound (200 grit or more). Do not put any compound on the stem.
- Adding a small amount of engine oil to the lapping compound can facilitate even application.

CAUTION ⚠

- **Do not put any compound on the stem.**

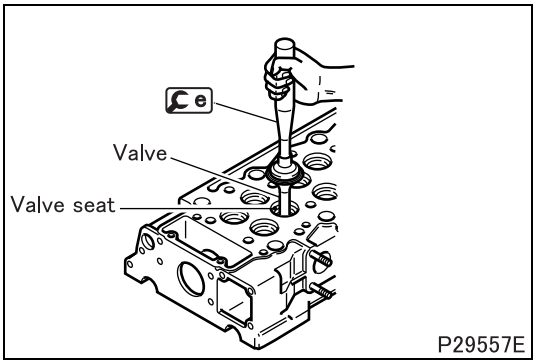

- Strike the valve several times against the valve seat while rotating the valve a little at a time.
- Wash away the compound with diesel fuel.
- Apply engine oil to the valve contact surface of the valve seat and rub in the valve and seat well.
- Inspect the contact pattern of the valve and valve seat again.
- If the contact pattern is still defective, replace the valve seat.

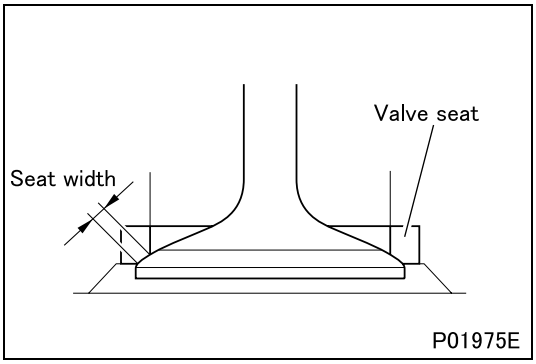

■ Inspection: Valve seats

- If a valve is corrected or replaced with a new one as a result of the following inspection, make sure to lap the valve and valve seat.

(1) Valve seat width

- If the measurement exceeds the limit, reface or replace the valve seat.

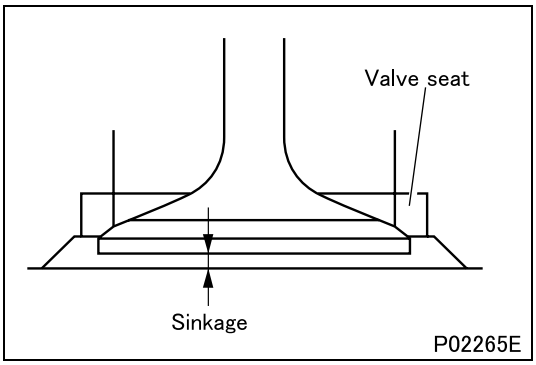

(2) Valve sinkage from cylinder head bottom surface

- Make sure that the valve and valve seat are pressed together tightly when measuring the sinkage.
- If the measurement exceeds the limit, replace the defective part(s).

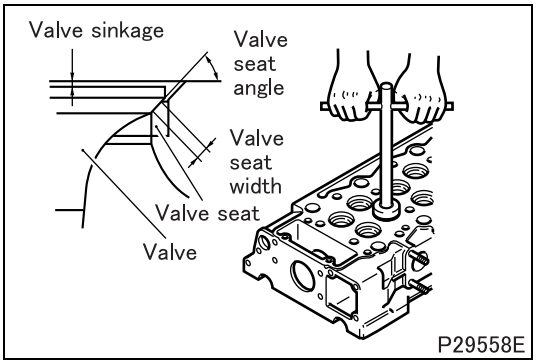

Refacing the valve seat

- Grind the valve seat using a valve seat cutter or valve seat grinder.
- Place a sandpaper of around #400 between the cutter and valve seat and grind the valve seat lightly.
- Use a 15° or 75° cutter to cut the valve seat to a width within the standard range. If the valve seat cannot be refaced to a width within the standard range, replace it.

CAUTION ⚠

- **Make sure that the valve seat refacing does not cause the valve sinkage to exceed the specified limit.**

- After refacing, lap the valve and valve seat.

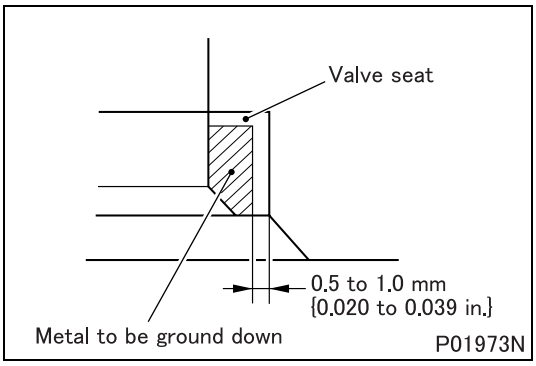

Replacement of valve seat
[Removal]

- The valve seats are installed by expansion fitting. To remove a valve seat, grind inside the metal stock to reduce the wall thickness, then remove the valve seat at room temperature.

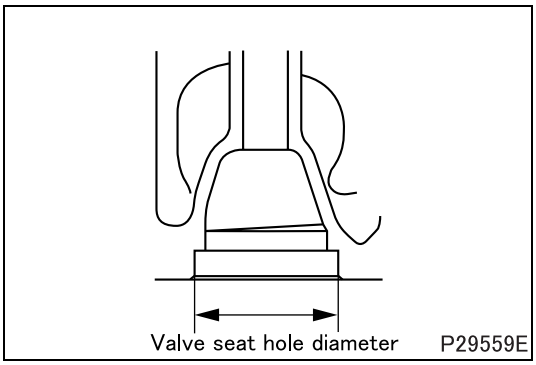

[Installation]

- Measure the diameter of the valve seat hole in the cylinder head.
- If the measurement deviates from the standard value, replace the cylinder head.

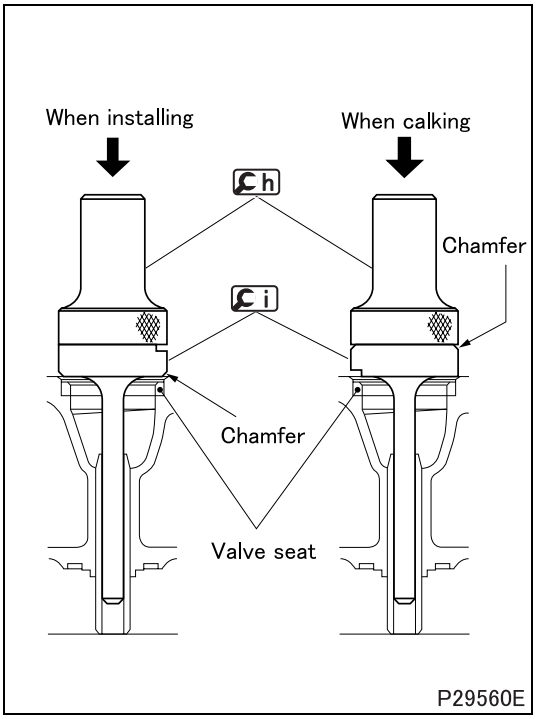

- Chill the valve seat thoroughly by immersing in it in liquid nitrogen.
- Install the valve seat in the cylinder head using h and i, with the chamfered edge of i toward the valve seat.
- Turn i over so that its chamfered edge is toward h, and calk the valve seat.
- Lap the valve seat and valve.

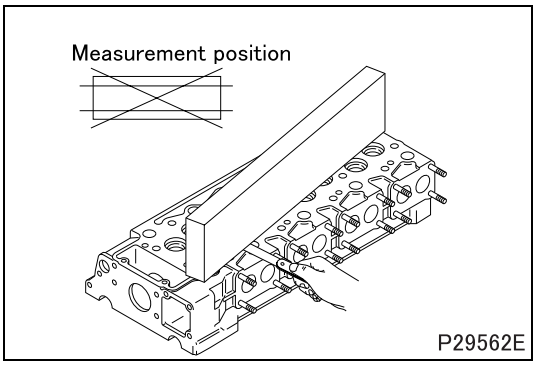

■ Inspection: Cylinder head bottom surface distortion

- If the distortion exceeds the limit, rectify it using a surface grinder.

◆Installation procedure◆

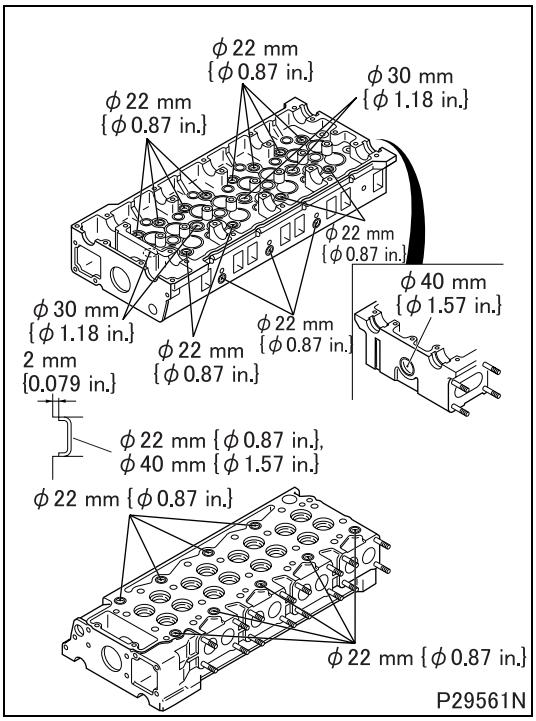

■Installation: Sealing caps

- Drive the sealing caps into the cylinder head to the specified depth.

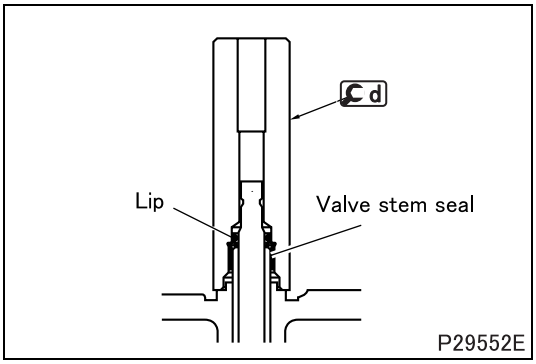

■Installation: Valve stem seal

- Apply engine oil to the lip of the valve stem seal.
- Install the valve stem seal until Cd sits snugly on the cylinder head.
- After installing the valve stem seal, check that its spring is not deformed or damaged.

■Installation: Valve cotter

- To install the valve cotter, follow the removal procedure. (See **"■ Removal: Valve cotters"**.)

M E M O

PISTONS, CONNECTING ROD AND CYLINDER LINERS

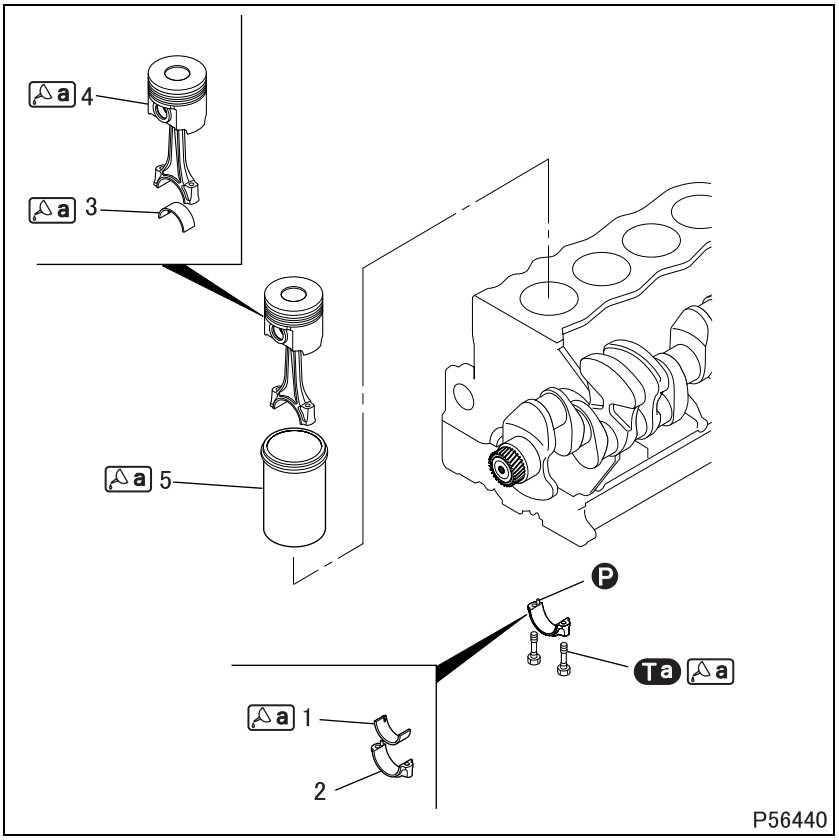

● **Disassembly sequence**

1 Lower connecting rod bearing
2 Connecting rod cap
3 Upper connecting rod bearing
4 Piston and connecting rod assembly (See later sections.)
5 Cylinder liner

Ⓟ: Locating pin

● **Assembly sequence**

Follow the disassembly sequence in reverse.

Service standards (Unit: mm {in.})

Location	Maintenance item		Standard value	Limit	Remedy
–	Piston projection from crankcase top surface (average value)		–0.088 to 0.094 {–0.0035 to 0.037}	–	Replace
–	Connecting rod end play		0.15 to 0.45 {0.0059 to 0.018}	0.6 {0.024}	Replace
1, 3	Connecting rod bearing	Span when free	–	Less than 69.5 {2.74}	Replace
		Oil clearance	0.034 to 0.093 {0.0013 to 0.0037}	0.2 {0.0079}	
4, 5	Piston-to-cylinder liner clearance		0.181 to 0.201 {0.0071 to 0.0079}	–	Replace
5	Cylinder liner	Flange projection above crankcase top surface	0.01 to 0.07 {0.00039 to 0.0028}	–	Replace
		Bore diameter	ϕ114 to 114.02 {ϕ4.4881 to 4.4889}	ϕ114.25 {ϕ4.50}	
		Difference in flange projection from neighboring cylinder liner	0.04 {0.0016} or less	–	

Tightening torque (Unit: N·m {ft.lbs, kgf·m})

Mark	Parts to be tightened	Tightening torque	Remarks
Ta	Bolt (connecting rod cap installation)	29 {2.1, 3.0} + 90° ± 5°	Wet

Lubricant and/or sealant

Mark	Points of application	Specified lubricant and/or sealant	Quantity
a	Bolt threads	Engine oil	As required
	Connecting rod bearing inside surface		
	Upper crankcase contact surface of cylinder liner		
	Piston outside surface		
	Cylinder liner wall surface		

Special tools (Unit: mm {in.})

Mark	Tool name and shape		Part No.	Application
a	Piston guide clamp	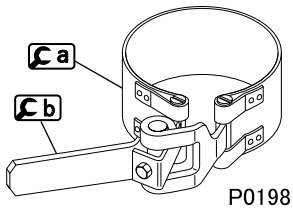 P01981	MH063432	Installation of piston and connecting rod assembly
b	Piston guide lever		MH061658	
c	Cylinder liner extractor	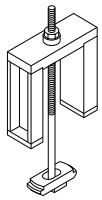 P30008	MH062537	Removal of cylinder liner
d	Cylinder liner installer A: φ113.5 {φ4.47}	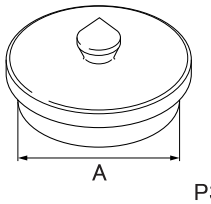 P30010	MH063606	Installation of cylinder liner
e	Adapter	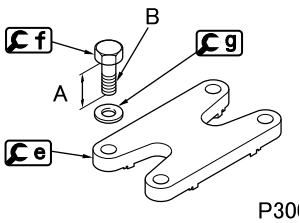 P30009	MH063433	Measurement of cylinder liner flange projection above upper crankcase top surface and difference in flange projection between neighboring cylinder liners
f	Bolt A: 40 {1.57}, B: M14 × 2		MF130625	
g	Washer		MH005012	

◆Inspection before removal◆

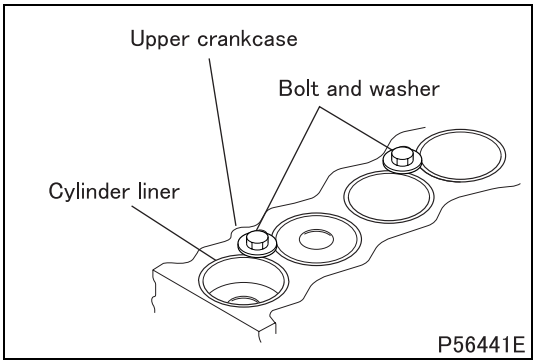

P56441E

■ Retaining cylinder liners

- The cylinder liners slips out of the upper crankcase easily when the upper crankcase is turned over or the crankshaft is rotated with pistons inside liners. To prevent this from happening, retain the flange of each cylinder liner in position with a bolt and washer.

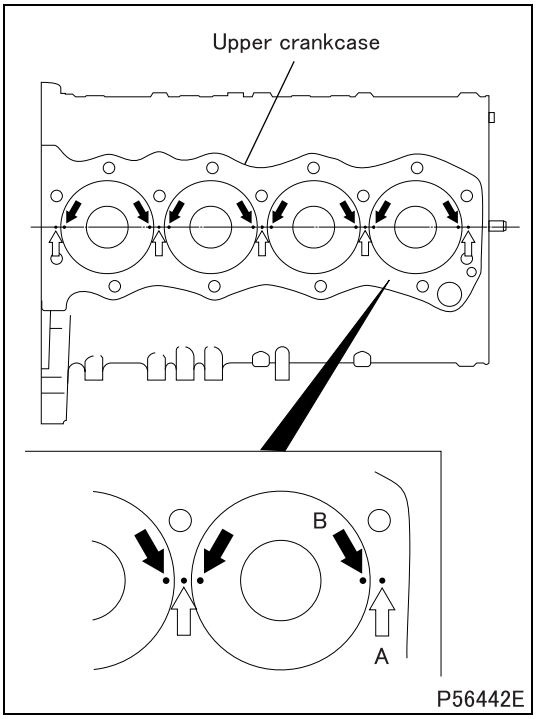

■ **Inspection: Piston projection from upper crankcase top surface**

CAUTION ⚠

- **The amount of piston projection affects engine performance and must therefore be inspected without fail.**

- Set the piston at the top dead center.
- Mark reference points A (five points in total) on the top surface of the upper crankcase as shown in the illustration. Using each of the marks as a zero point, measure the amount of piston projection relative to the zero point (height of measurement point B – height of reference point A).
- Make the measurements at the two measurement points B for each cylinder (eight points in total) using the reference point A nearest to each measurement point, and calculate the average value of all the measurements.
- If the average value is out of the standard value range, check the clearances between all relevant parts.
- Select and use a cylinder head gasket that can accommodate the average piston projection (average value of the eight measurements). (See CYLINDER HEAD AND VALVE MECHANISM section.)

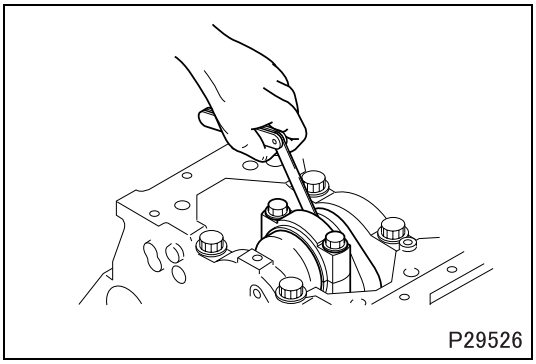

■ **Inspection: Connecting rod end play**

- Measure the end play for every connecting rod.
- If any measurement exceeds the specified limit, replace the defective part(s).

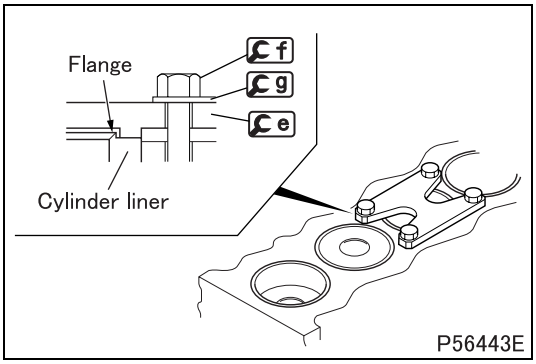

■ **Inspection: Difference in flange projection between neighboring cylinder liners**

- Install e on the upper crankcase so that it is not lying on top of any part of the flanges. Tighten f to a torque of 49 N·m {36 ft.lbs, 5 kgf·m}.

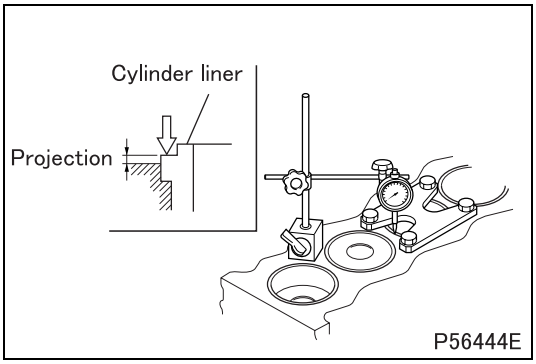

- Measure the amount of projection of the cylinder liner flange above the upper crankcase top surface.
- If the measurement is not within the standard value range, inspect the state of installation of the cylinder liner and then replace the defective part(s).
- If the difference in the amount of projection between neighboring cylinders is not within the standard value range, inspect the state of installation of the cylinder liner and then replace the defective parts.

CAUTION ⚠

- **Insufficient projection of the flange can lead to a reduced pressure around the bore of the cylinder head gasket, causing gas leakage.**

◆Inspection procedure◆

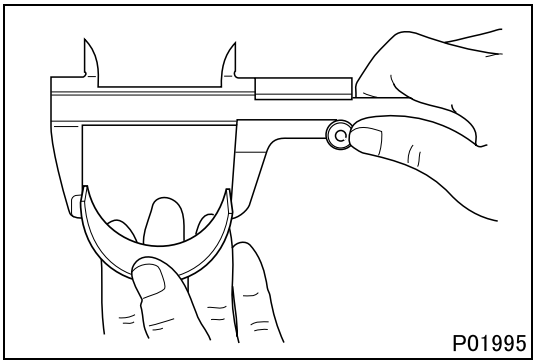

■ Inspection: Connecting rod bearing span when free

CAUTION ⚠

- **Do not attempt to manually expand the bearings.**

- If the span is less than the specified limit, replace both the upper and lower bearings.

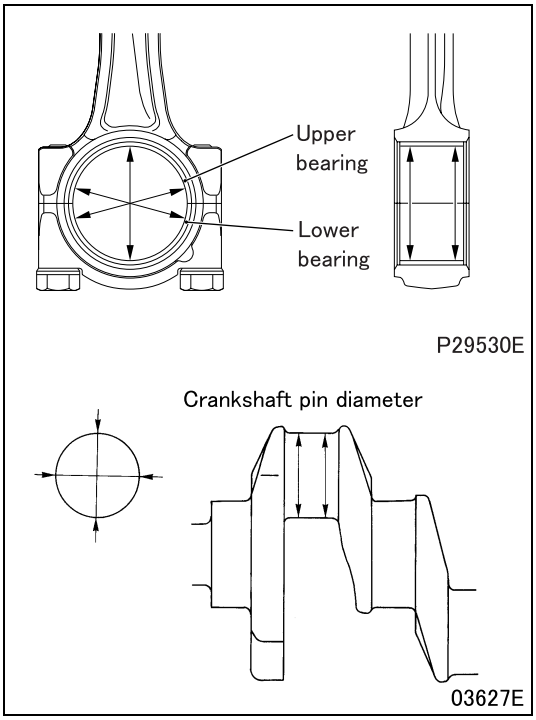

■ Inspection: Connecting rod bearing-to-crankshaft oil clearance

- Fit the lower bearing to the connecting rod cap and the upper bearing to the connecting rod, then tighten the bolts to a torque of 30 N·m {22 ft.lbs, 3.1 kgf·m}.
- Measure the inside diameter of the bearing and the diameter of the crankshaft pin.
- If the clearance exceeds the limit, replace the defective part(s).
- If a bearing has to be replaced with an undersized one, machine the crankshaft pin to the specified undersize diameter.

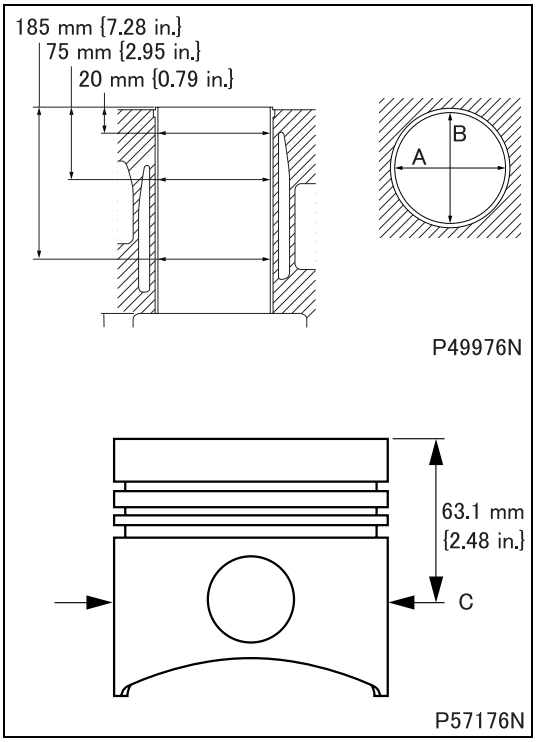

■ **Inspection: Piston-to-cylinder liner clearance**

- If the measurement is not within the standard value range, replace the defective part(s).
  - A: Cylinder bore measurement (in direction of crankshaft axis)
  - B: Cylinder bore measurement (in direction perpendicular to crankshaft axis)
  - C: Piston diameter measurement (in direction perpendicular to piston pin hole)

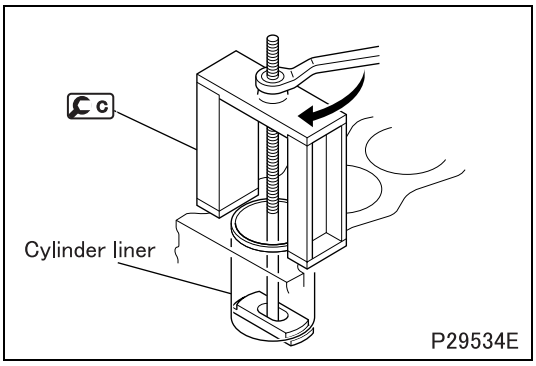

Replacement of cylinder liner
[Removal]

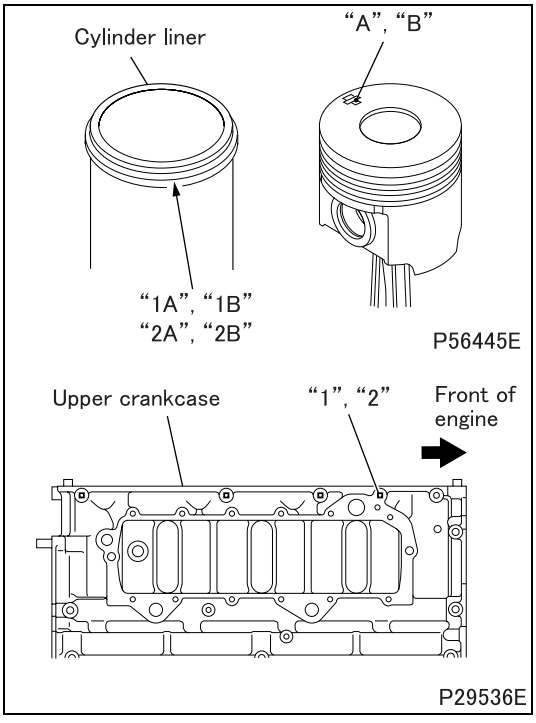

[Installation]

- When replacing cylinder liners, select the cylinder liners which correspond to the size marks on the upper crankcase and the piston.

Upper crankcase size mark	Cylinder liner size mark	Piston size mark
"1"	"1A"	"A"
	"1B"	
"2"	"2A"	
	"2B"	"B"

CAUTION ⚠

- **Make sure to use pistons and cylinder liners of the same size. Failure to do so may result in seizures it the engine.**

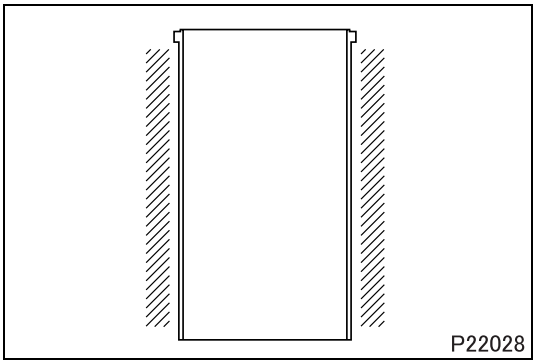
P22028

- Apply a thin coat of engine oil to the surfaces surrounding the cylinder liner of the upper crankcase (the shaded areas in the illustration).

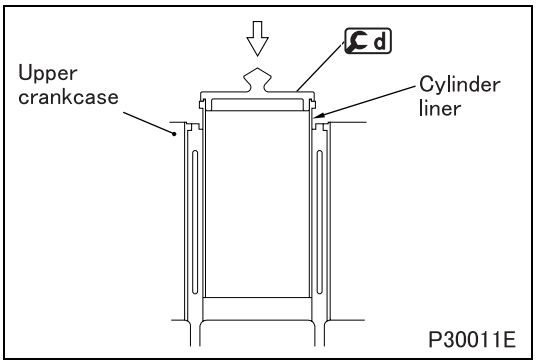

P30011E

- Insert the cylinder liner into the upper crankcase by pushing down on d by hand slowly and evenly.

CAUTION ⚠

- **Handle the cylinder liner extremely carefully, as its wall is relatively thin and can be easily damaged.**

◆Installation procedure◆

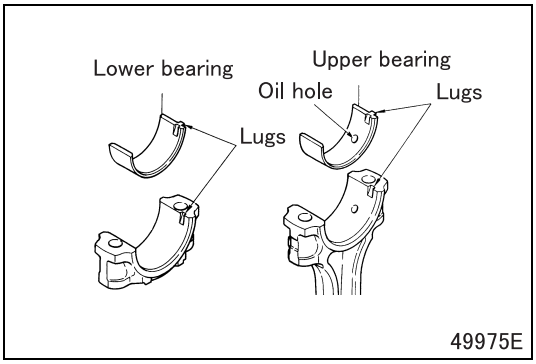

49975E

■ Installation: Connecting rod bearings

CAUTION ⚠

- **Do not reverse the positions of the lower bearing and the upper bearing (with oil hole) when installing, as this may cause seizure in the engine.**

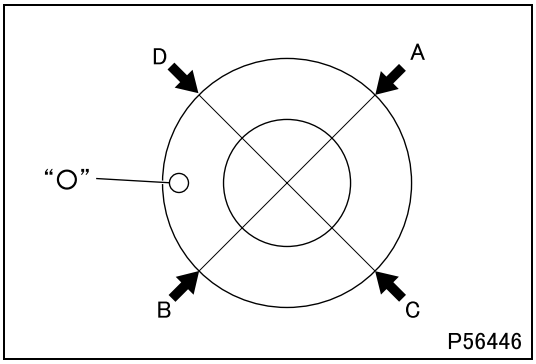

P56446

■ Installation: Piston and connecting rod assembly

- Check that the piston ring end gaps are in their correct positions.
  A: 1st compression ring gap
  B: 2nd compression ring gap
  C: Oil ring gap
  D: Oil ring expander spring gap

"O": Front mark on piston

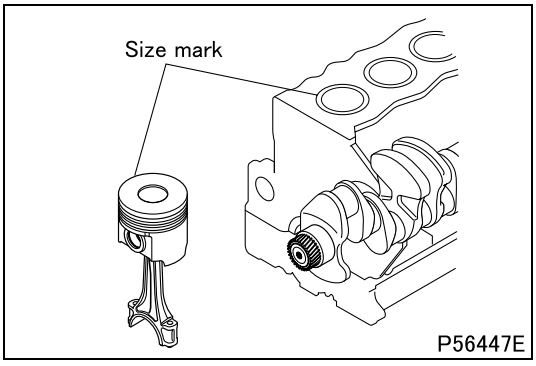

P56447E

- Check that the pistons and the cylinder liners have identical size marks ("A" or "B").
- Install the pistons in the cylinder liners. Be careful not to scratch the inner surface of the liner and the crankshaft pins.

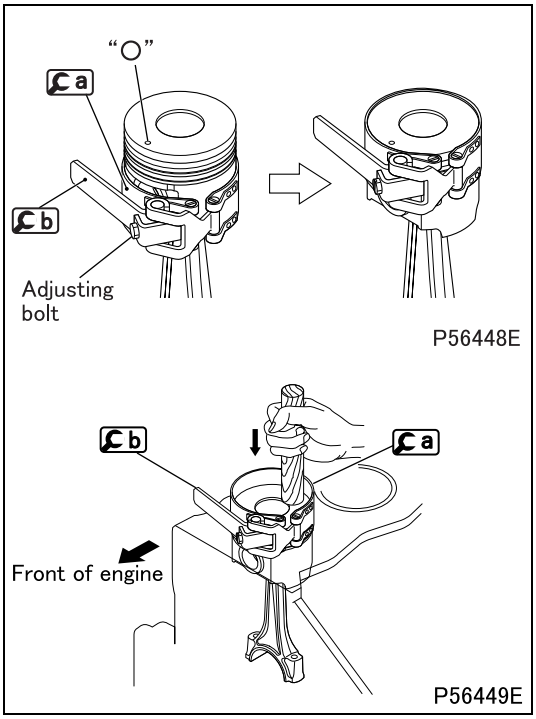

- Face the front mark "○" of the piston toward the front of the engine.
- Using the adjusting bolt of b, adjust the inside diameter of a such that it matches the piston's skirt diameter.
- Remove the tools from the piston and apply engine oil to the following parts before reinstalling the tools around the piston rings:
  - Outside surface of piston
  - Inside surface of a
  - Inside surface of cylinder liner

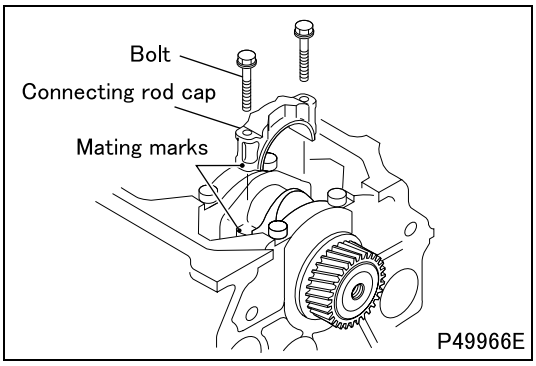

- After installing the piston and connecting rod assembly, align the mating marks on the connecting rod and connecting rod cap and tighten the bolts alternately in the following manner.
  - First tighten the bolt to a torque of 29 N·m {21 ft.lbs, 3.0 kgf·m}.
  - Tighten the bolt further by turning it clockwise by 90° ± 5°.

M E M O

PISTONS, CONNECTING ROD AND CYLINDER LINERS

Piston and Connecting Rod

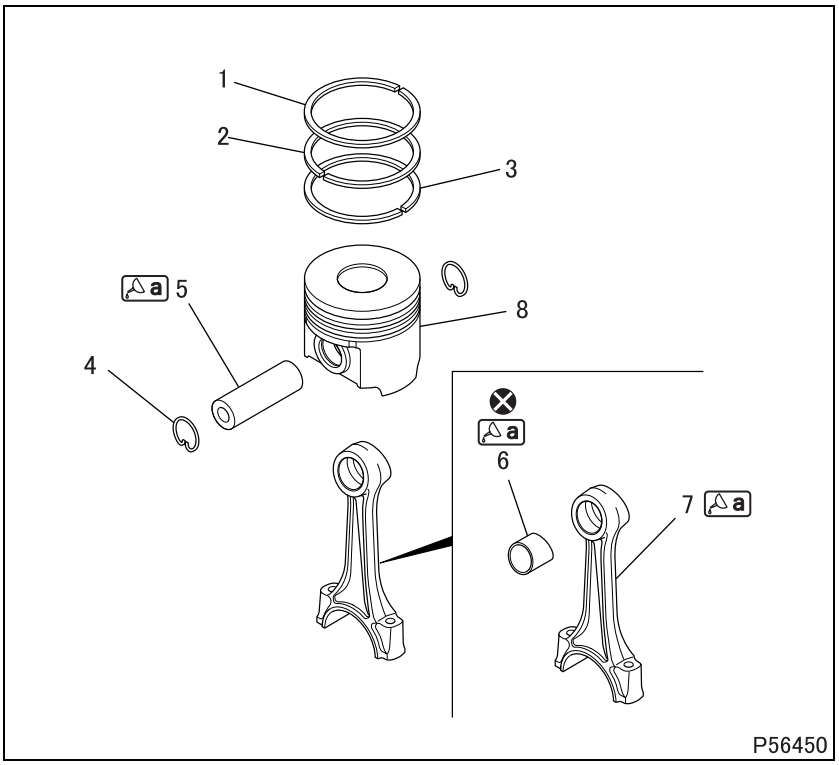

● **Disassembly sequence**

1 1st compression ring
2 2nd compression ring
3 Oil ring
4 Snap ring
5 Piston pin
6 Connecting rod bushing
7 Connecting rod
8 Piston

⊗: Non-reusable parts

● **Assembly sequence**

Follow the disassembly sequence in reverse.

Service standards (Unit: mm {in.})

Location	Maintenance item		Standard value	Limit	Remedy
1 to 3	Piston ring end gap	1st compression ring	0.3 to 0.45 {0.012 to 0.018}	1.5 {0.059}	Replace
		2nd compression ring	0.4 to 0.55 {0.016 to 0.022}		
		Oil ring	0.3 to 0.5 {0.012 to 0.020}		
1 to 3, 8	Piston ring side clearance in piston groove	1st compression ring	0.129 to 0.178 {0.0051 to 0.0070}	0.2 {0.0079}	Replace
		2nd compression ring	0.065 to 0.105 {0.0026 to 0.0041}	0.15 {0.0059}	
		Oil ring	0.025 to 0.065 {0.00098 to 0.0026}		
4, 6	Piston pin-to-connecting rod bushing clearance		0.020 to 0.055 {0.00079 to 0.0022}	0.1 {0.0039}	Replace
4, 8	Piston pin-to-piston clearance		0.004 to 0.022 {0.00016 to 0.00087}	0.05 {0.0020}	Replace
7	Connecting rod	Bend	–	0.05 {0.0020}	Replace
		Twist	–	0.1 {0.0039}	

Lubricant and/or sealant

Mark	Points of application	Specified lubricant and/or sealant	Quantity
a	Piston pin outside surface	Engine oil	As required
	Connecting rod bushing outside surface		
	Connecting rod bushing fitting surface of connecting rod		

Special tools

Mark	Tool name and shape	Part No.	Application
a	Piston ring tool 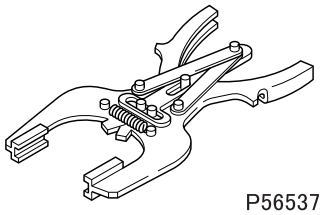 P56537	MH060014	Removal and installation of piston rings
b	Connecting rod bushing puller kit 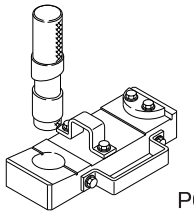 P02015	MH062225	Removal and installation of connecting rod bushings

◆Removal procedure◆

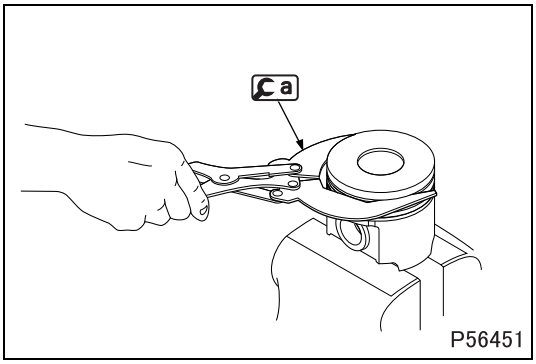

P56451

■ **Removal: Piston ring**

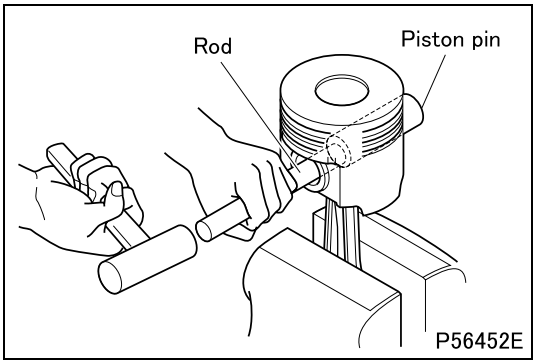

P56452E

■ **Removal: Piston pin**

- Remove the piston pin by striking it with a rod and hammer.
- If the piston pin is difficult to remove, first heat the piston in hot water or with a piston heater.

◆Inspection procedure◆

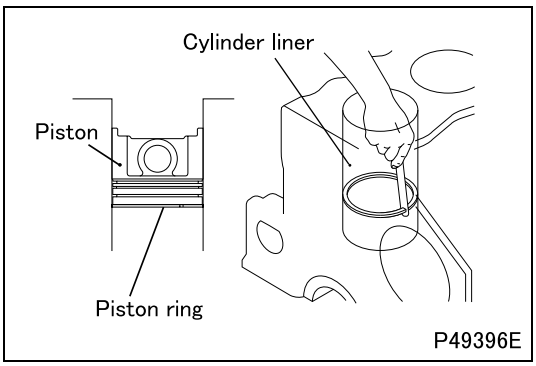

P49396E

■ **Inspection: Piston ring end gap**

- Using the crown of a piston, push the piston ring horizontally into a cylinder in the cylinder liner until it reaches the lower part of the cylinder liner, where there is relatively small wear.
- Taking care not to move the piston ring, measure the end gap.
- If any of the rings has a gap exceeding the specified limit, replace all the piston rings as a set.

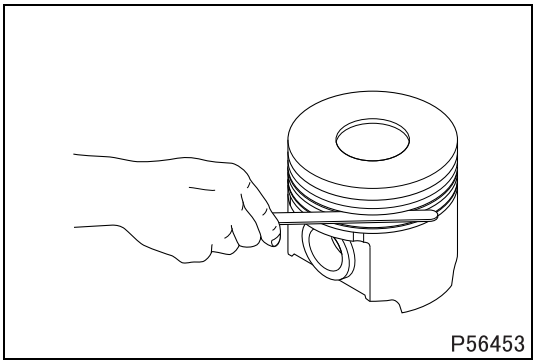

■ **Inspection: Piston ring side clearance in piston groove**

- Remove any carbon deposits from the ring groove in the piston.
- Measure the side clearance of each ring around the piston's entire periphery.
- If any of the measurements exceeds the specified limit, replace the defective part(s). If any of the piston rings is defective, replace all the rings on the piston as a set.

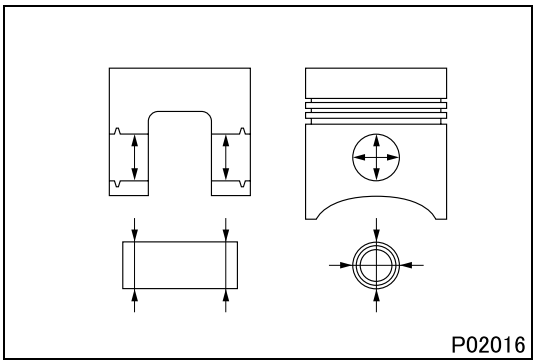

■ **Inspection: Piston pin-to-piston clearance**

- If the measurement exceeds the specified limit, replace the defective part(s).

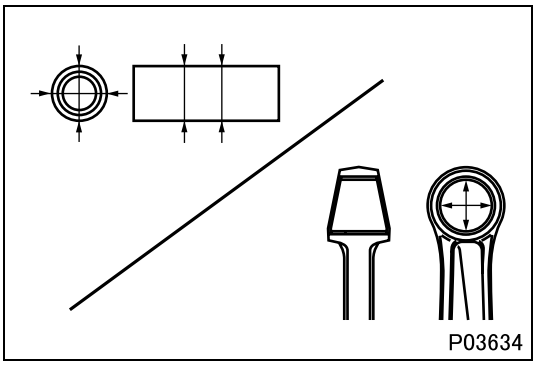

■ **Inspection: Piston pin-to-connecting rod bushing clearance**

- If any of the measurements exceeds the specified limit, replace the bushing.

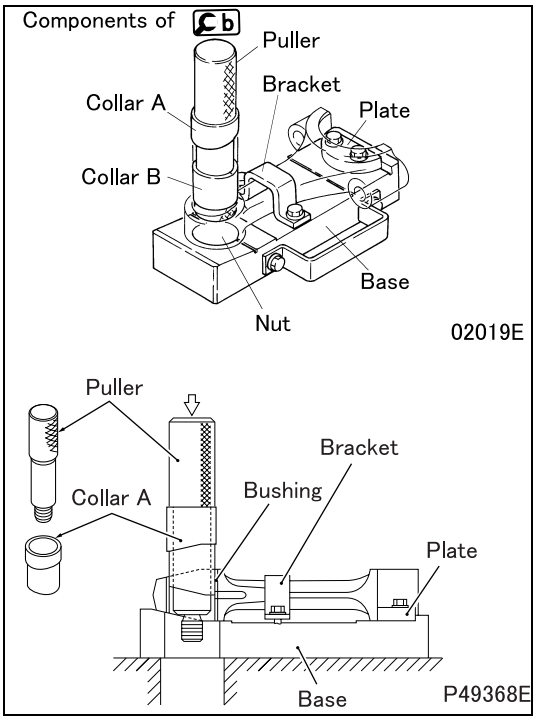

Replacement of connecting rod bushing

- Replace the connecting rod bushing using b.

[Removal]

- Remove the upper bearing (if fitted) from the big end of the connecting rod.
- Mount the connecting rod on the base and lock it in position with the bracket and plate.
- Fit collar A over the puller with its ends facing in the illustrated directions. Then, slowly apply a pressure of approximately 49 kN {11020 lbs, 5000 kgf} to the puller with a press to force out the connecting rod bushing.

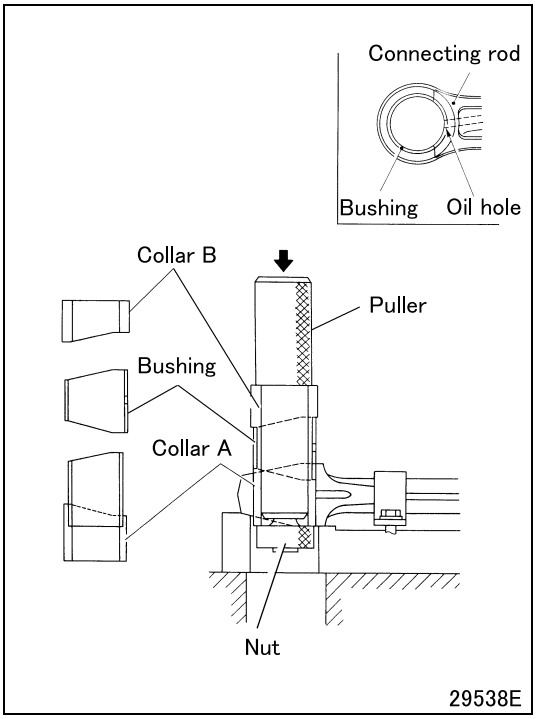

[Installation]

- Apply engine oil to the outside surface of the connecting rod bushing and the bushing fitting surface of the connecting rod.
- Fit collar B, the bushing, and collar A over the puller in the illustrated directions and lock this arrangement together with the nut.
- Align the oil holes in the connecting rod bushing and the connecting rod. Then, use a press to slowly apply a pressure of approximately 49 kN {11020 lbs, 5000 kgf} to the puller until the bushing is forced into place.
- After press-fitting the connecting rod bushing, measure the clearance between the piston pin and connecting rod bushing.
- If the measurement is less than the standard clearance range, ream the bushing.

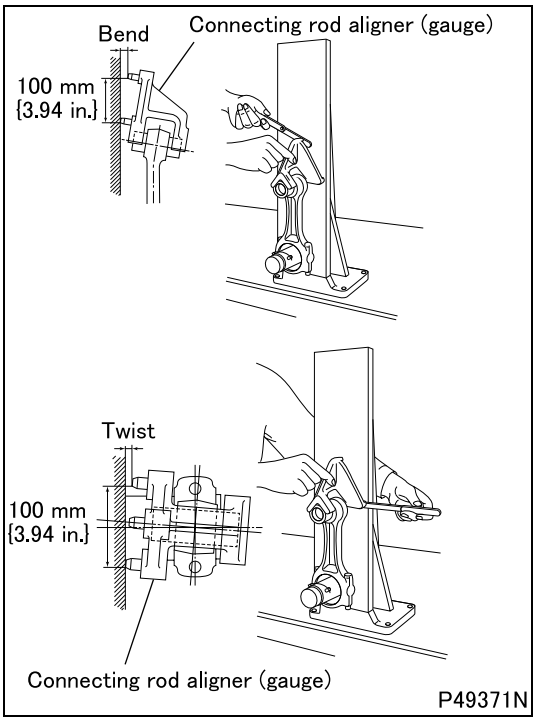

■Inspection: Connecting rod bend and twist

- Mount the connecting rod on the connecting rod aligner. Also mount the connecting rod bearings, piston pin, and connecting rod cap to create the same conditions as are expected when the connecting rod is mounted on a crankshaft. Tighten the bolts of the connecting rod bearing cap to a torque of 30 N·m {22 ft.lbs, 3.1 kgf·m}.
- Measure the extent of bend and twist in the connecting rod.
- If either measurement exceeds the specified limit, replace the connecting rod.

◆Installation procedure◆

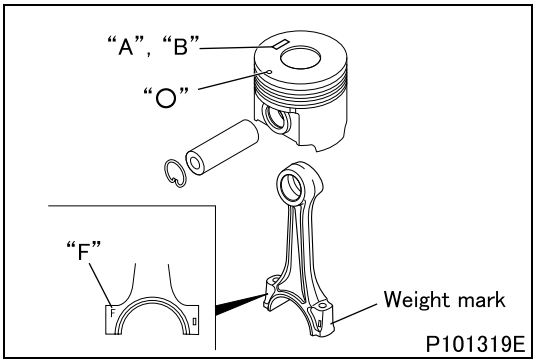

■ Installation: Piston and connecting rod

- Install pistons and connecting rods as follows when replacing them.
- All connecting rods used in the same engine must be of the same weight size mark.
  Weight mark: "C" to "G"
- Apply engine oil to the piston pin, and assemble the piston and connecting rod with their marks facing in the illustrated directions.

"O": Front mark on piston
"F": Front mark on connecting rod

- If the piston pin is difficult to insert, heat the piston in hot water or with a piston heater.

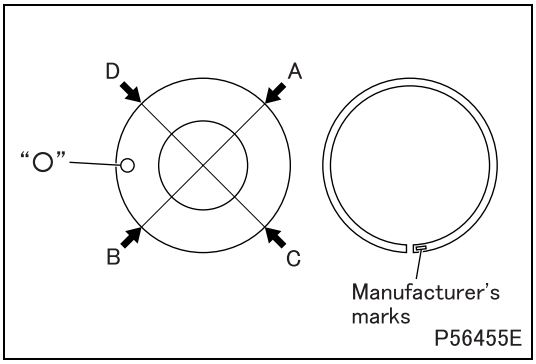

■ Installation: Piston rings

- With the manufacturer's marks (found near the piston ring end gaps) facing up, install the piston rings so that the end gap of each ring is positioned as illustrated.
  A: 1st compression ring end gap
  B: 2nd compression ring end gap
  C: Oil ring end gap
  D: Oil ring's expander spring end gap

"O": Front mark on piston

The manufacturer's marks are present only on the 1st and 2nd compression rings.

M E M O

FLYWHEEL

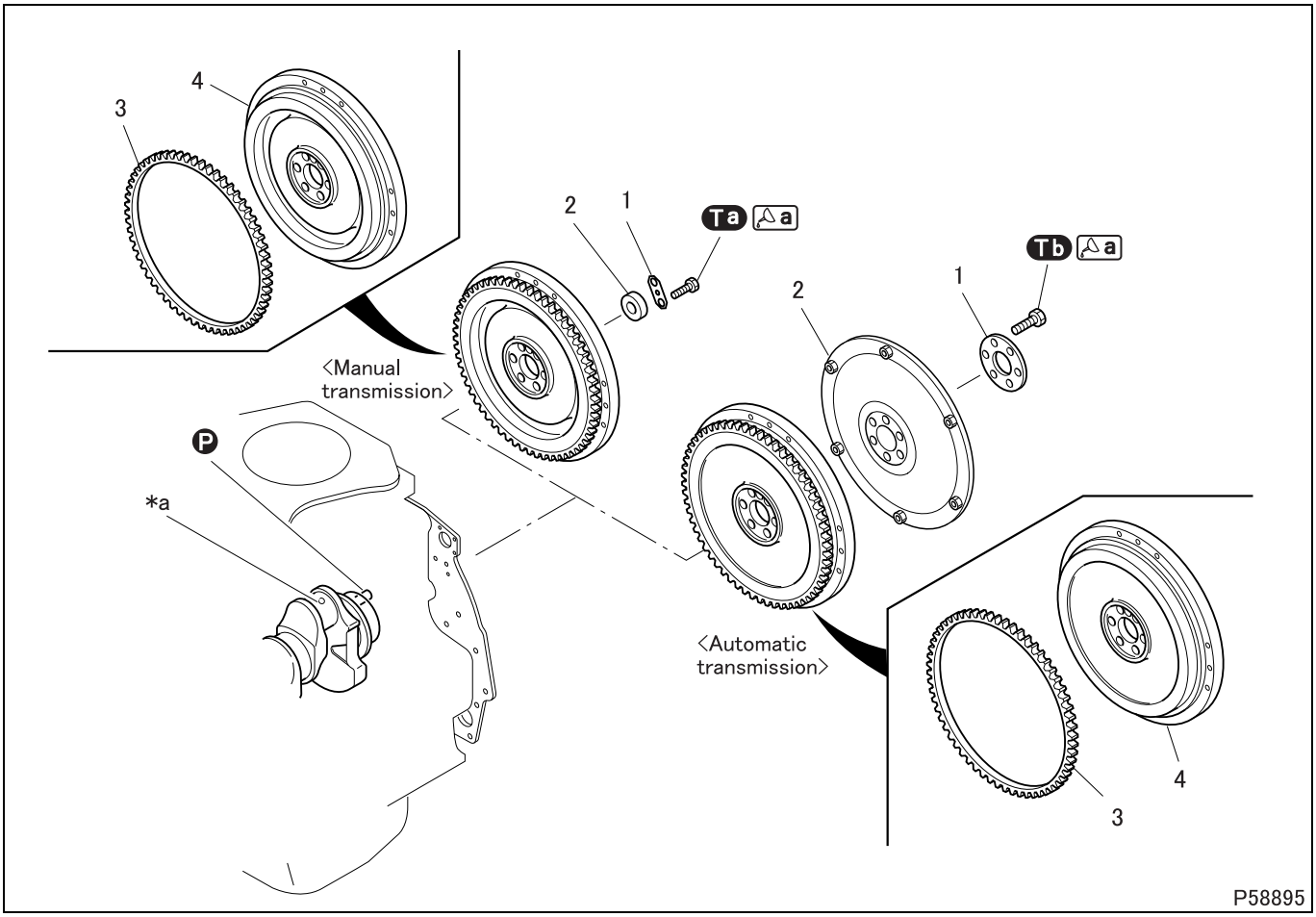

● **Disassembly sequence**

1 Plate <Manual transmission>
Wear plate <Automatic transmission>
2 Bearing <Manual transmission>
Drive plate <Automatic transmission>
3 Ring gear
4 Flywheel

***a**: Crankshaft
Ⓟ: Locating pin

● **Assembly sequence**

Follow the disassembly sequence in reverse.

Service standards (Unit: mm {in.})

Location	Maintenance item		Standard value	Limit	Remedy
4	Flywheel <Manual transmission>	Friction surface runout (when fitted)	–	0.2 {0.0079}	Rectify or replace
		Friction surface height	19.5 {0.77}	18.5 {0.73}	Replace
		Friction surface distortion	0.05 {0.0020} or less	0.2 {0.0079}	Rectify or replace
		Friction surface parallelism	0.1 {0.0039} or less	–	

Tightening torque (Unit: N·m {ft.lbs, kgf·m})

Mark	Parts to be tightened	Tightening torque	Remarks
Ta	Bolt (flywheel installation)	59 {44, 6.0} + 40°	Wet
Tb	Bolt (flywheel installation)	118 {87, 12} + 90°	Wet

Lubricant and/or sealant

Mark	Points of application	Specified lubricant and/or sealant	Quantity
a	Bolt threads	Engine oil	As required

Special tools (Unit: mm {in.})

Mark	Tool name and shape	Part No.	Application
a	Socket wrench 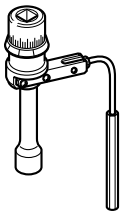 P01984	MH062183	Installation of flywheel
b	Magnet base 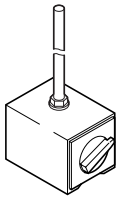 P00471	MH062356	

◆Inspection before removal◆

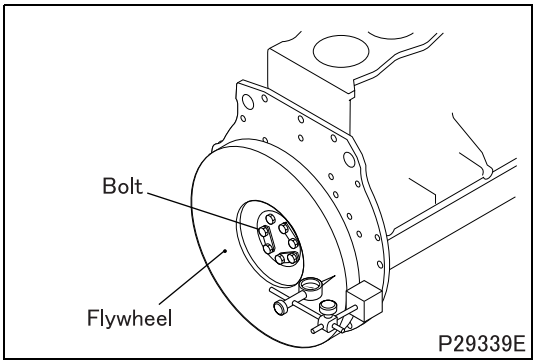

■ **Inspection: Flywheel runout <Manual transmission>**

- If the runout exceeds the specified limit, check that the bolts are tightened correctly and that there are no abnormalities on the crankshaft mounting surface. If the runout is still excessive even after necessary steps have been taken according to the check results, rectify or replace the flywheel.

◆Removal procedure◆

■ **Removal: Ring gear**

- Heat the ring gear evenly with a gas burner or the like until it reaches approximately 200°C {390°F}, then remove it from the flywheel.

WARNING ⚠

- **You could get burnt if you touch the heated ring gear.**

◆Inspection procedure◆

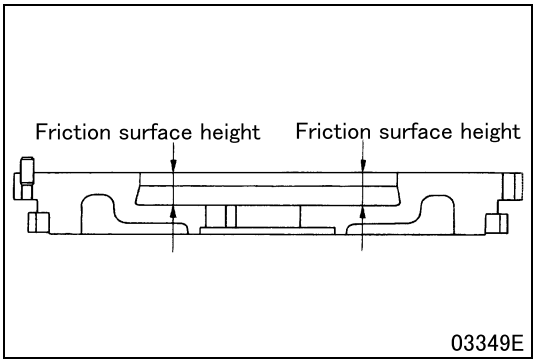

■ **Inspection: Flywheel <Manual transmission>**

(1) Friction surface height

- If the height is below the specified limit, replace the flywheel.

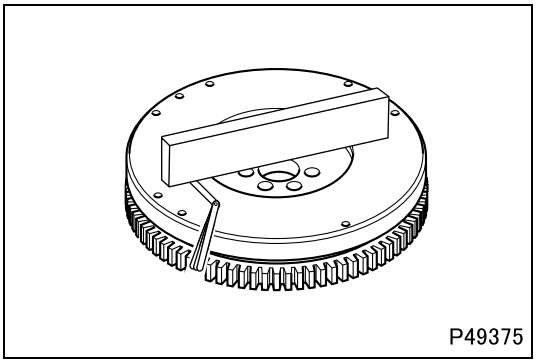

(2) Friction surface distortion

- If the measured amount of distortion is above the specified limit, rectify or replace the flywheel.

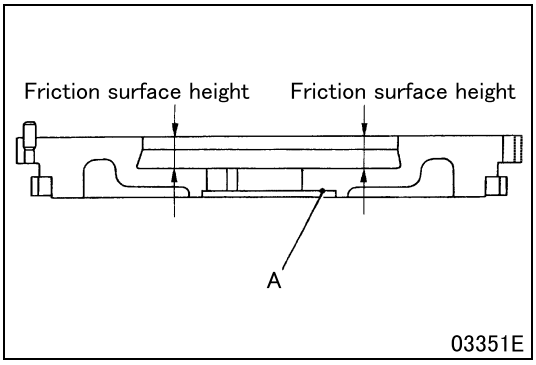

Rectification of friction surface

- Rectify the friction surface so that its height is not below the specified limit, and it is parallel with surface A within specification.

◆Installation procedure◆

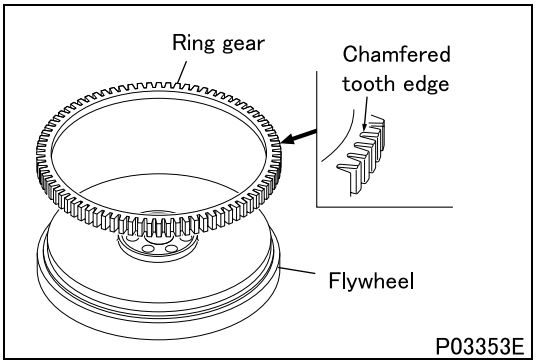

■ **Installation: Ring gear**

- Heat the ring gear evenly with a gas burner or the like until it reaches approximately 200°C {390°F}.

WARNING ⚠

- **You could get burnt if you touch the heated ring gear.**

- Fit the ring gear with the side having non-chamfered tooth edges toward the flywheel.

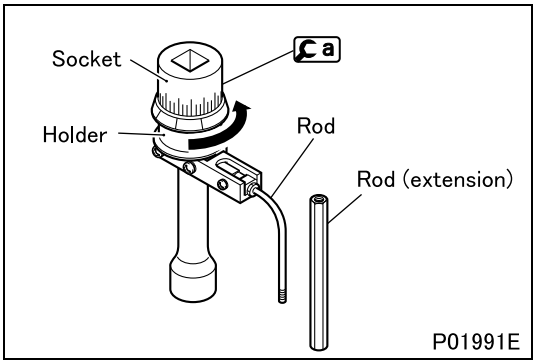

■ **Installation: Flywheel <Manual transmission>**

- Tighten all the bolts to 59 N·m {44 ft.lbs, 6.0 kgf·m} and then additionally tighten them by the following procedure.
- Rotate the holder of a counterclockwise to pretension the internal spring.

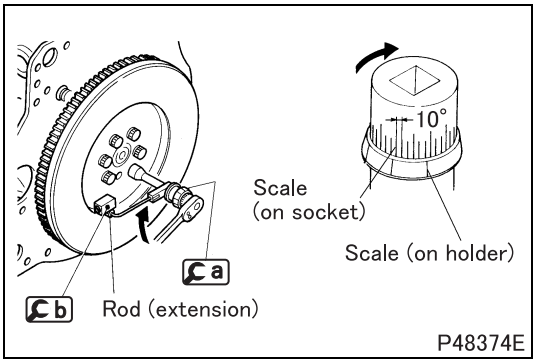

- Fit a on the bolt and set b so that the rod (extension) is held pressed against it by the spring force.
- Align a scale mark on the socket with a scale mark on the holder. (This point will be the point of reference, or the 0° point.)
- Starting with this point of reference, turn the socket clockwise with a wrench by 40° ± 5° (one graduation on the socket scale represents 10°).

FRONT CASE

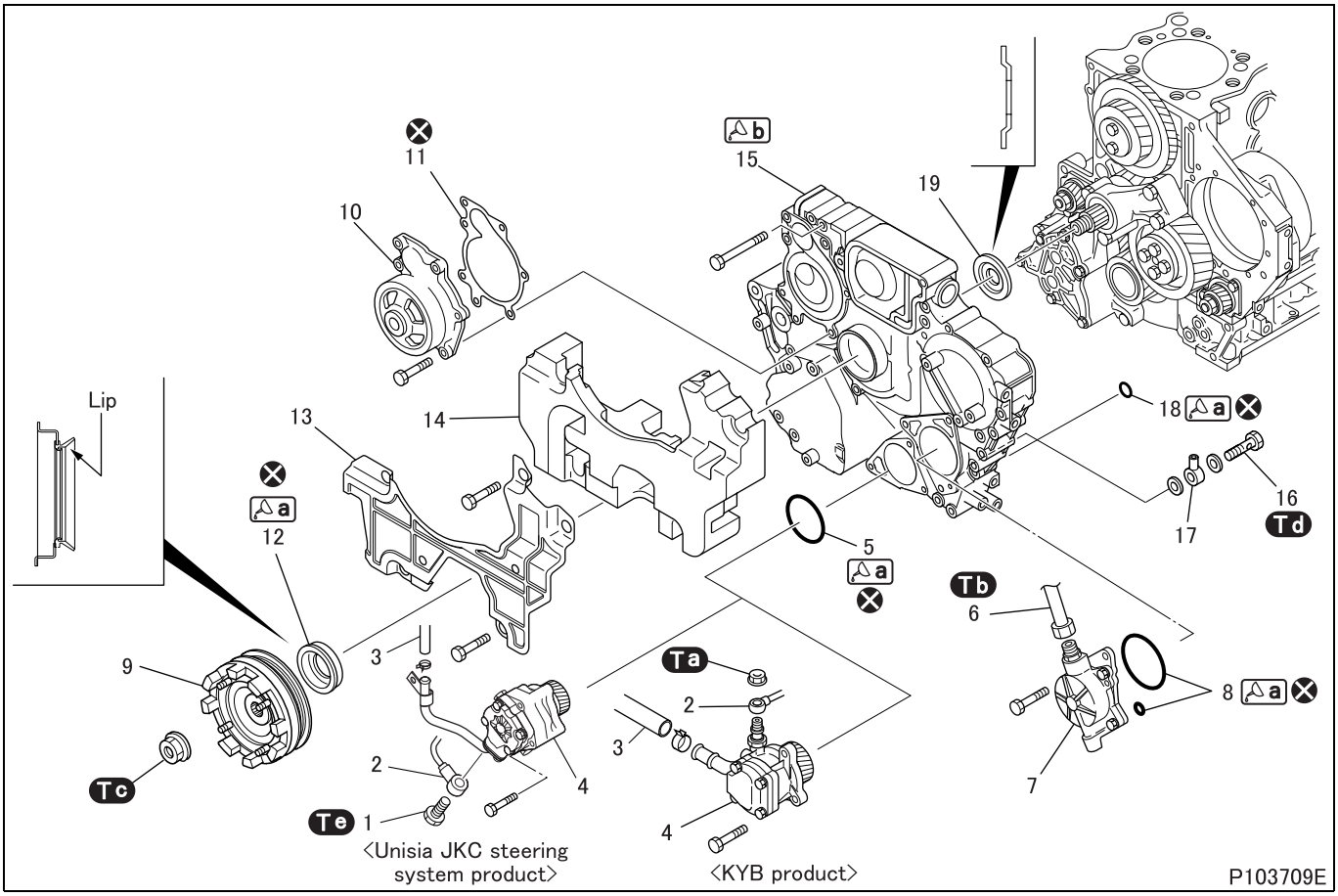

● **Disassembly sequence**

1 Eyebolt <Unisia JKC steering system type>
2 Power steering pipe
3 Power steering hose
4 Power steering oil pump (See Gr37.)
5 O-ring
6 Vacuum pipe
7 Vacuum pump (See Gr35A.)
8 O-ring
9 Fan pulley
10 Water pump (See Gr14.)
11 Gasket
12 Front oil seal
13 Front case cover
14 Front case rubber
15 Front case
16 Eyebolt
17 Oil jet
18 O-ring
19 Front oil seal slinger

⊗: Non-reusable parts

● **Assembly sequence**

Follow the disassembly sequence in reverse.

Tightening torque (Unit: N·m {ft.lbs, kgf·m})

Mark	Parts to be tightened	Tightening torque	Remarks
Ta	Nut (power steering pipe installation)	29.4 to 39.2 {22 to 29, 3 to 4}	–
Tb	Vacuum pipe	29.4 {22, 3.0}	–
Tc	Nut (fan pulley installation)	370 {270, 38}	–
Td	Eyebolt (oil jet installation)	10 {7.4, 1.0}	–
Te	Eyebolt (power steering pipe installation)	49.0 to 63.7 {36 to 47, 5.0 to 6.5}	–

Lubricant and/or sealant

Mark	Points of application	Specified lubricant and/or sealant	Quantity
a	O-ring	Engine oil	As required
	Front oil seal lip		
b	Front case installation surfaces	ThreeBond 1207C or D	As required

Special tools (Unit: mm {in.})

Mark	Tool name and shape	Part No.	Application
a	Holding bar A: 114 {4.49} B: φ9 {φ0.35} 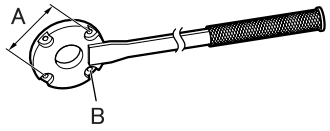 P69433	MH062970	Holding of fan pulley

◆**Removal procedure**◆

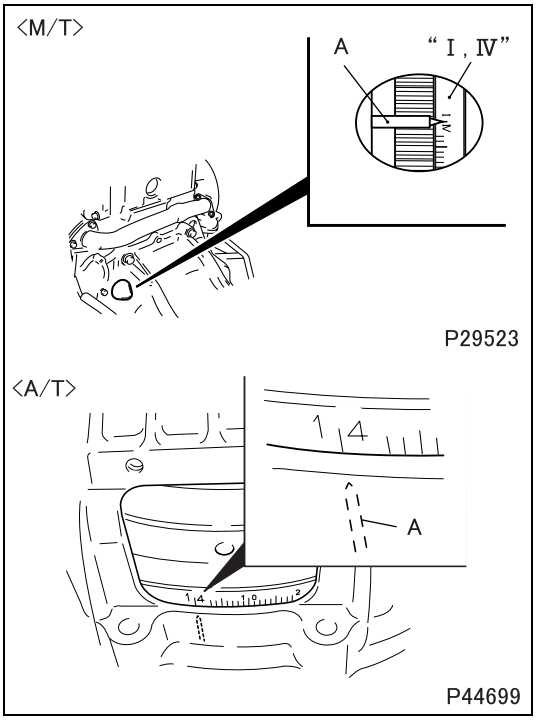

■ **Removal: Vacuum pump**

- The vacuum pump also serves for positioning the balance shaft LH. Therefore, before removing the vacuum pump, hold the balance shaft in position by the following procedure.
- Align the pointer A to between the inscribed lines (Ⅰ and Ⅳ or 1 and 4) on the flywheel. (Place No.1 cylinder piston at the top dead center on compression stroke.)

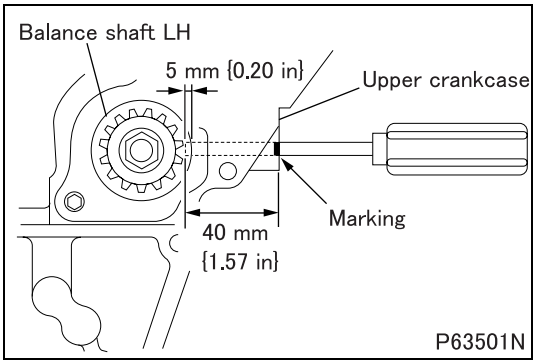

- Remove the upper crankcase plug.
- Mark a screwdriver or the like (ϕ4.5 mm {ϕ0.18 in} or less) at a point 40 mm {1.57 in} apart from its tip.
- Insert the screwdriver or the like (ϕ4.5 mm {ϕ0.18 in} or less) into the plug hole until it lightly touches the balance shaft LH.

CAUTION ⚠

- **Do not press the screwdriver hard against the balance shaft LH, as this may damage No.1 journal of the balance shaft.**

- Put the tip of the screwdriver or the like into the shaft supporting hole at No.1 journal of the balance shaft.
- This insertion depth of the screwdriver or the like into the shaft supporting hole should be 5 mm {0.20 in}.
- Remove the vacuum pump with the screwdriver or the like inserted in the hole.

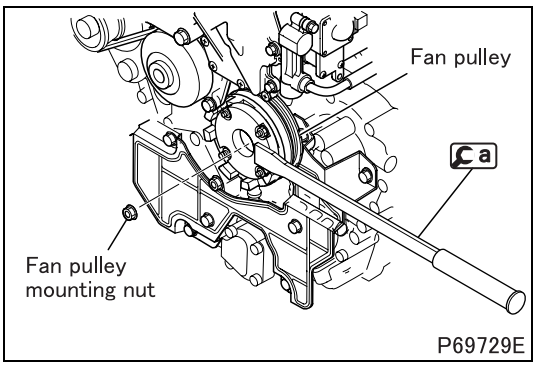

■ Removal: Fan pulley

- Put Ca in position on the studs of the fan pulley and fix the tool by using nuts.
- While holding Ca, loosen the fan pulley mounting nut.

◆Installation procedure◆

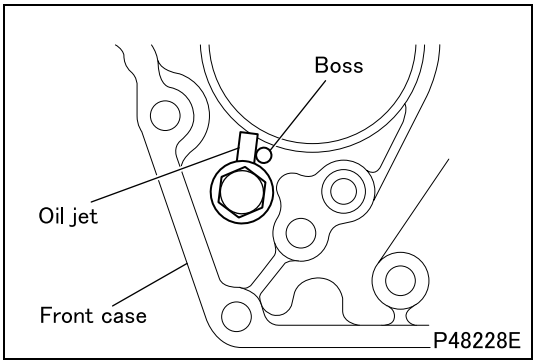

■ Installation: Oil jet

- When installed, the oil jet must be in contact with the front case and its nozzle must face in the illustrated direction.

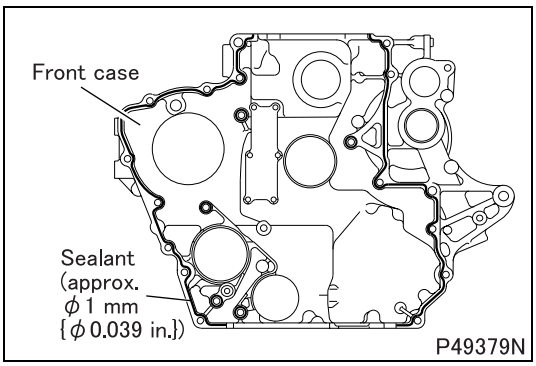

■ Installation: Front case

- Clean the sealant application surfaces of each part.
- Apply evenly thick beads of sealant to the upper crankcase mounting surface of the front case without any breaks.
- Mount the front case within three minutes of applying the sealant, being careful not to dislodge the sealant.

CAUTION ⚠

- **Do not run the engine within one hour of installing the front case.**
- **If the front case mounting bolts are loosened or removed, be sure to reapply sealant to the front case.**

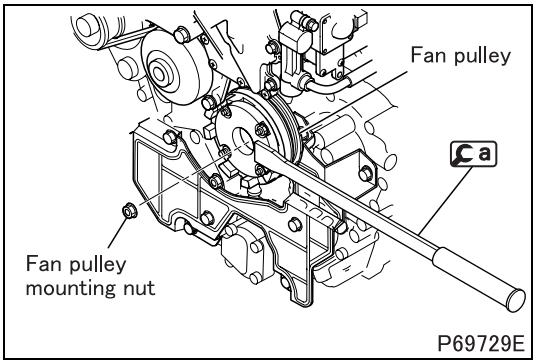

■ **Installation: Fan pulley**

- Put Ca in position on the studs of the fan pulley and fix the tool by using nuts.
- Tighten the fan pulley mounting nut to the specified torque while holding Ca.

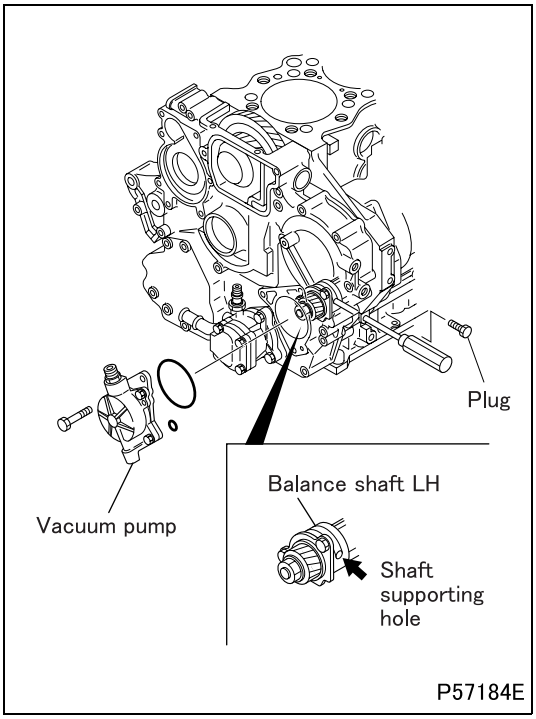

■ **Installation: Vacuum pump**

- The vacuum pump also serves as an element holding the balance shaft LH in place. Therefore, before installing the vacuum pump, hold the balance shaft LH in the correct position by the following procedure.
  - Place the No. 1 cylinder piston at the top dead center on compression stroke.
  - Remove the upper crankcase plug.
  - Insert a screwdriver or a similar tool into the plug hole until it lightly touches the balance shaft LH.

CAUTION ⚠

- **Do not press the screwdriver strongly against the balance shaft LH, as this may damage the No. 1 journal of the balance shaft.**

  - Turn the balance shaft LH slowly until the screwdriver aligns with the shaft support hole at the No. 1 journal and insert the screwdriver into the hole.
- Install the vacuum pump.
- After installing the vacuum pump, remove the screwdriver and reinstall the plug.

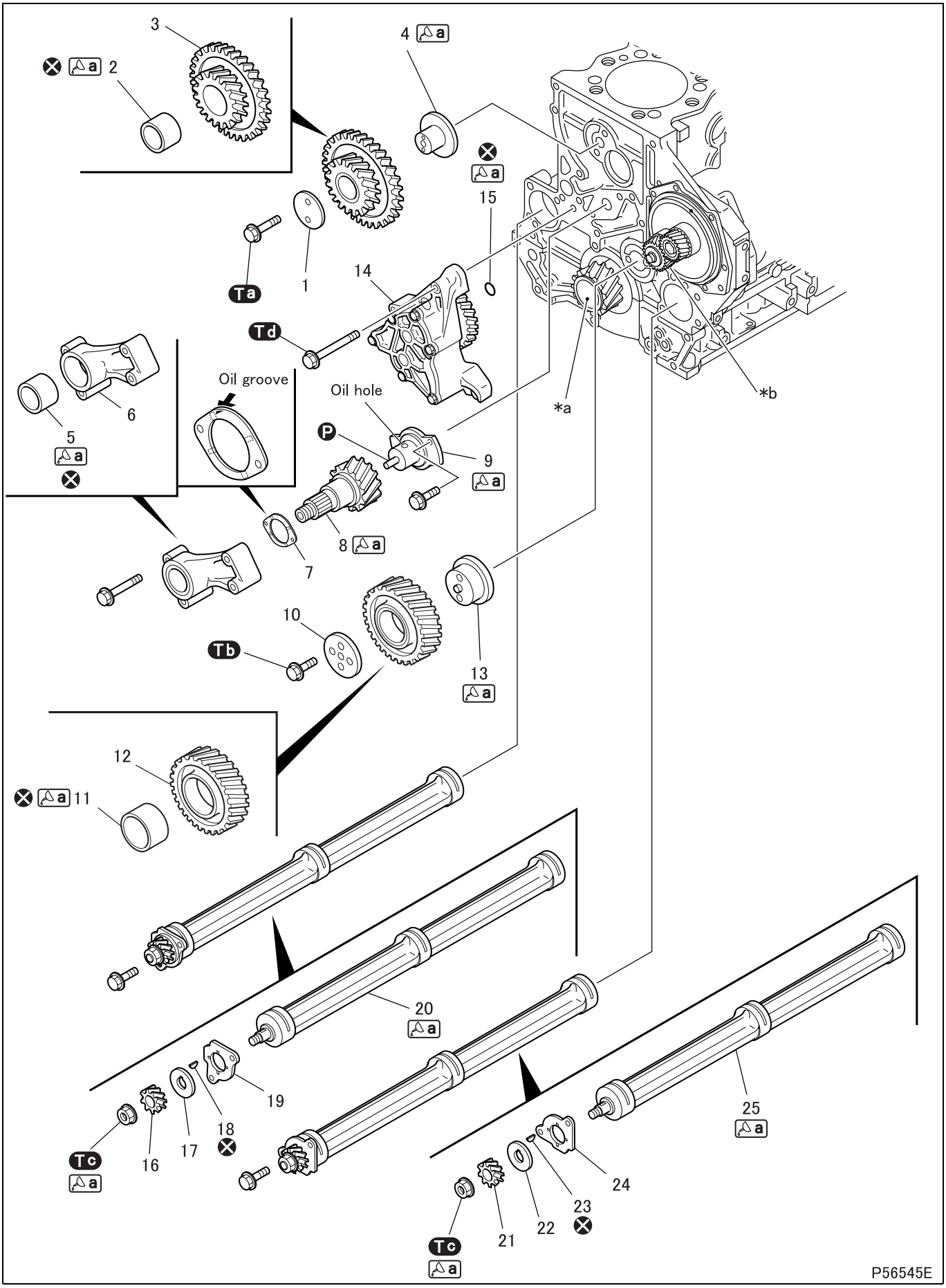
3
2
4
15
1
Ta
14
Td
Oil groove
Oil hole
6
5
P
9
8
7
*a
*b
10
Tb
13
12
11
20
19
18
17
16
Tc
25
24
23
22
21
Tc
P56545E

● **Disassembly sequence**

1 Thrust plate
2 Idler gear bushing
3 Idler gear
4 Idler shaft
5 Fan shaft case bushing
6 Fan shaft case
7 Thrust plate
8 Fan shaft
9 Fan gear shaft
10 Thrust plate
11 No. 1 idler gear bushing
12 No. 1 idler gear
13 No. 1 idler shaft
14 Oil pump (See Gr12.)
15 O-ring
16 Balance shaft gear RH
17 Thrust spacer
18 Key
19 Thrust plate
20 Balance shaft RH
21 Balance shaft gear LH
22 Thrust spacer
23 Key
24 Thrust plate
25 Balance shaft LH

***a**: Crankshaft gear
***b**: Supply pump idler gear

Ⓟ: Locating pin
⊗: Non-reusable parts

● **Assembly sequence**

Follow the disassembly sequence in reverse.

Service standards (Unit: mm {in.})

Location	Maintenance item		Standard value	Limit	Remedy
–	Backlash between gears	Idler gear and fan shaft	0.09 to 0.14 {0.0035 to 0.0055}	0.3 {0.012}	Replace
		Fan shaft and No. 1 idler gear	0.06 to 0.10 {0.0024 to 0.0039}	0.3 {0.012}	
		No. 1 idler gear and crankshaft gear	0.11 to 0.13 {0.0043 to 0.0051}	0.3 {0.012}	
		No. 1 idler gear and supply pump idler gear	0.12 to 0.15 {0.0047 to 0.0059}	0.3 {0.012}	
		Oil pump gear and crankshaft gear	0.12 to 0.15 {0.0047 to 0.0059}	0.3 {0.012}	
		Oil pump gear and balance shaft gear RH	0.19 to 0.22 {0.0075 to 0.0087}	0.3 {0.012}	
–	End play of gears and shafts	Idler gear	0.10 to 0.20 {0.0039 to 0.0079}	0.3 {0.012}	Replace
		Fan shaft	0.07 to 0.19 {0.0028 to 0.0075}	0.3 {0.012}	
		No. 1 idler gear	0.15 to 0.25 {0.0059 to 0.0098}	0.3 {0.012}	
		Balance shaft RH	0.1 to 0.2 {0.0039 to 0.0079}	0.3 {0.012}	
		Balance shaft LH	0.1 to 0.2 {0.0039 to 0.0079}	0.3 {0.012}	
2, 4	Idler gear bushing-to-idler shaft clearance		0.02 to 0.06 {0.00079 to 0.0024}	0.1 {0.0039}	Replace
5, 8	Fan shaft case bushing-to-fan shaft clearance		0.03 to 0.07 {0.0012 to 0.0028}	0.1 {0.0039}	Replace
8, 9	Fan shaft-to-fan gear shaft clearance		0.01 to 0.05 {0.00039 to 0.0020}	0.1 {0.0039}	Replace
11, 13	No. 1 idler gear bushing-to-No. 1 idler shaft clearance		0.03 to 0.07 {0.0012 to 0.0028}	0.1 {0.0039}	Replace
20	Balance shaft RH bend		0.025 {0.00098}	0.05 {0.0020}	Replace
25	Balance shaft LH bend		0.025 {0.00098}	0.05 {0.0020}	Replace

Tightening torque (Unit: N·m {ft.lbs, kgf·m})

Mark	Parts to be tightened	Tightening torque	Remarks
Ta	Bolt (idler shaft installation)	32.3 {24, 3.3}	–
Tb	Bolt (No. 1 idler shaft installation)	53.9 {40, 5.5}	–
Tc	Nut (balance shaft gear installation)	96.1 {71, 9.8}	Wet
Td	Bolt (oil pump installation)	28 {21, 2.9}	–

Lubricant and/or sealant

Mark	Points of application	Specified lubricant and/or sealant	Quantity
a	Inner surface of every bushing	Engine oil	As required
	Outside surface of every shaft		
	O-rings		
	Nut threads		
	Balance shaft journals		

Special tools (Unit: mm {in.})

Mark	Tool name and shape	Part No.	Application
a	Idler gear bushing puller A: ϕ46.5 {ϕ1.83}, B: ϕ50 {ϕ1.97} 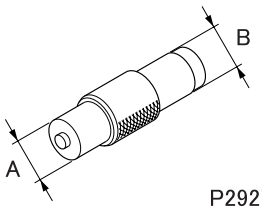	MH062540	Removal and installation of idler gear bushing
b	Idler gear bushing puller A: ϕ37 {ϕ1.46}, B: ϕ40 {ϕ1.57} 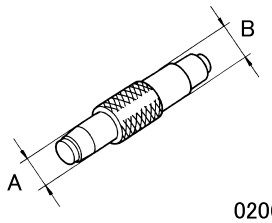	MH062601	Removal and installation of fan shaft case bushing
c	Idler gear bushing puller A: ϕ54.5 {ϕ2.15}, B: ϕ58 {ϕ2.28} 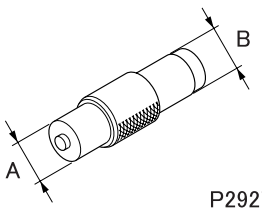	MH062541	Removal and installation of No. 1 idler gear bushing

◆Inspection before removal◆

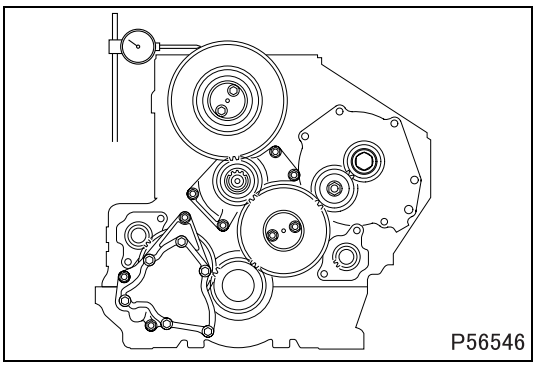

■ Inspection: Backlash between gears

- For each pair of gears, measure the backlash at more than three teeth.
- If any of the measurements exceeds the specified limit, replace the defective part(s).

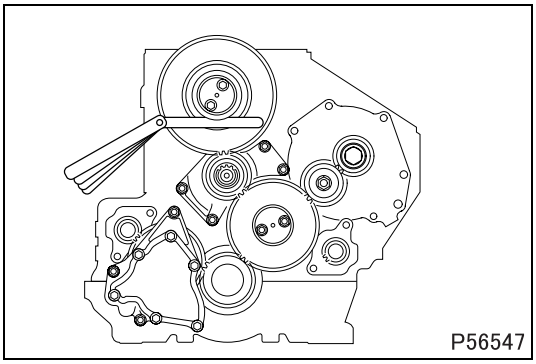
P56547

■ **Inspection: End play of each gear and shaft**

- If the measurement exceeds the specified limit, replace the defective part(s).

◆Removal procedure◆

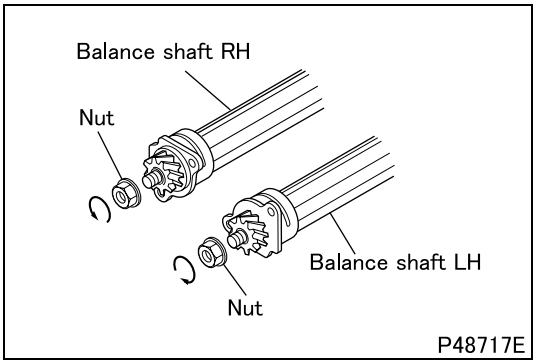

P48717E

■ **Removal: Balance shaft**

- Remove the balance shaft RH by turning its nut counterclockwise, and the balance shaft LH by turning its nut clockwise.

◆Inspection procedure◆

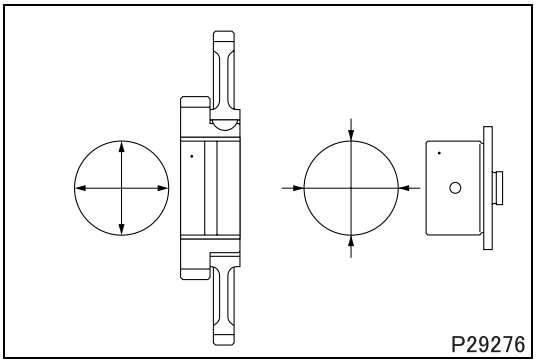
P29276

■ **Inspection: Idler gear bushing-to-idler shaft clearance**

- If the measurement exceeds the specified limit, replace the bushing.

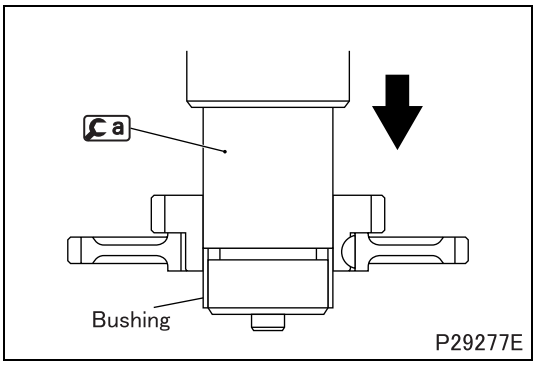

P29277E

Replacement of idler gear bushing
[Removal]

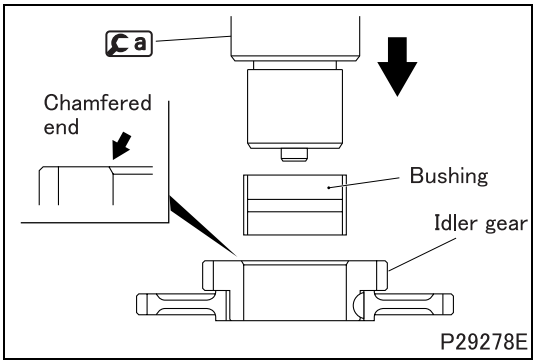

[Installation]

- Place the idler gear with its ends facing as illustrated.
- Press-fit the idler gear bushing until a sits snugly on the chamfered end of the idler gear.
- After press-fitting the bushing, measure the clearance.
- If the measurement is less than the minimum of the standard value range, ream the idler gear bushing until the clearance falls within the standard value range.

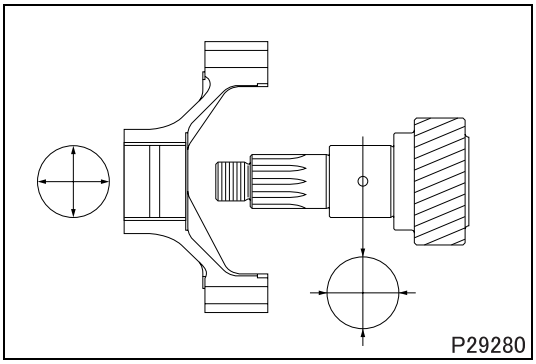

■ Inspection: Fan shaft case bushing-to-fan shaft clearance

- Replace the fan shaft case bushing if the measurement exceeds the specified limit.

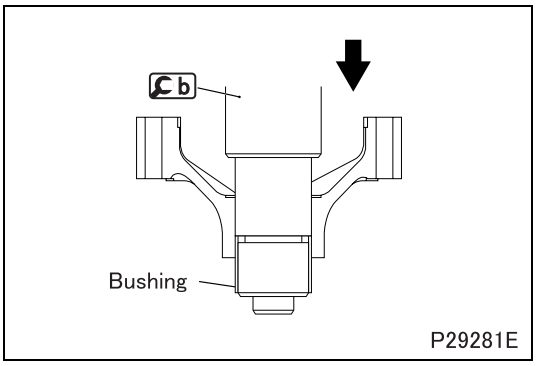

Replacement of fan shaft case bushing
[Removal]

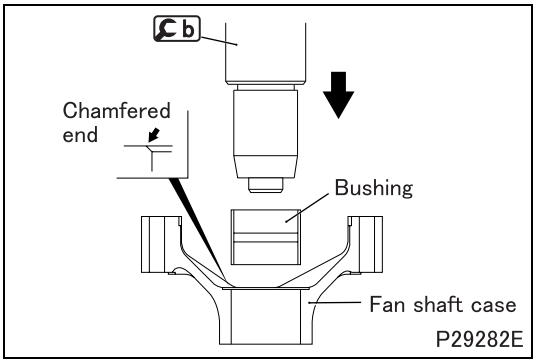

[Installation]

- Position the fan shaft case with its ends facing in the illustrated directions.
- Press in the bushing until b rests snugly on the chamfered end of the fan shaft case.
- After press-fitting the bushing, remeasure the clearance between it and the fan shaft.
- Ream the bushing if the measurement is below the standard value range.

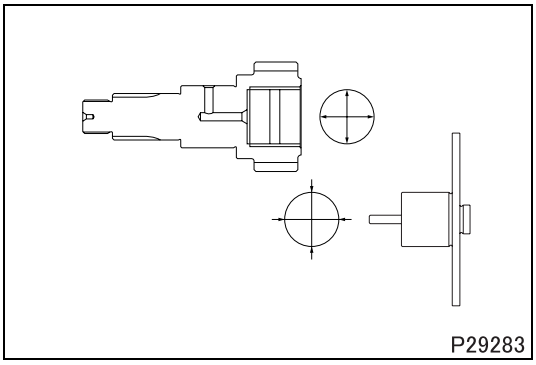

■ Inspection: Fan shaft-to-fan gear shaft clearance

- Replace the fan shaft if the measurement exceeds the specified limit.

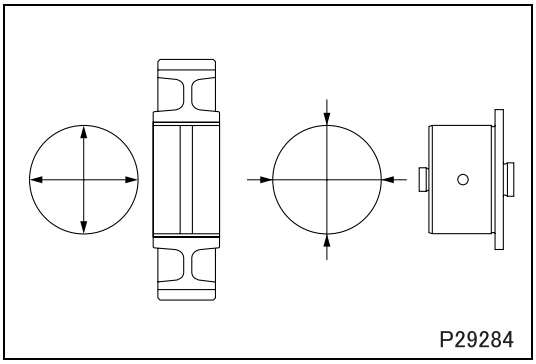
P29284

■ **Inspection: No. 1 idler gear bushing-to-No. 1 idler shaft clearance**

- Replace the bushing if the measurement exceeds the specified limit.

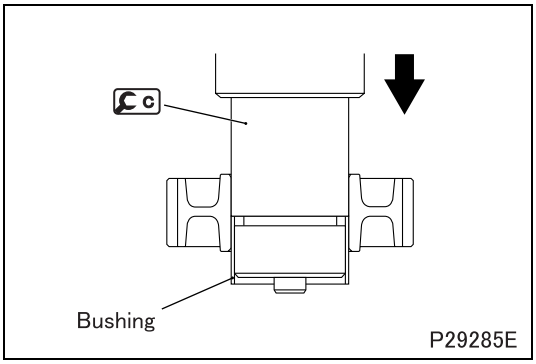

P29285E

Replacement of No. 1 idler gear bushing
[Removal]

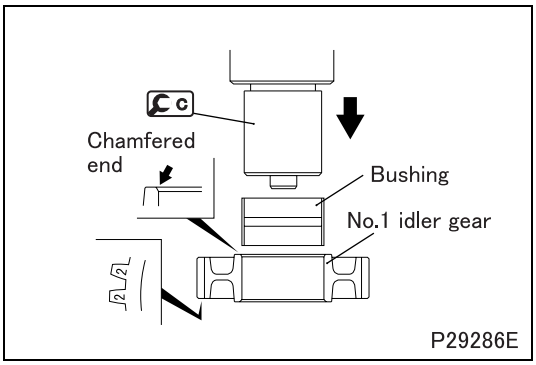

P29286E

[Installation]

- Position the No. 1 idler gear with its ends facing in the illustrated directions.
- Press in the gear bushing until C sits snugly on the chamfered end of the No. 1 idler gear.
- After press-fitting the bushing, remeasure the clearance between it and the No. 1 idler shaft.
- Ream the bushing if the measurement is below the standard value range.

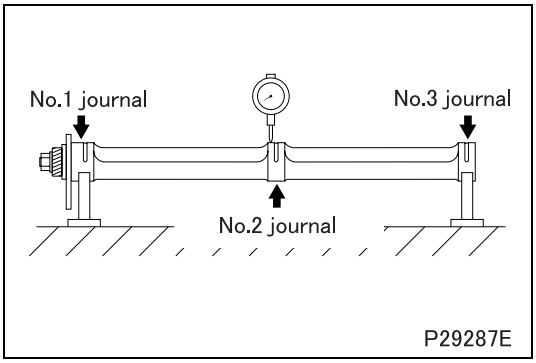

P29287E

■ **Inspection: Balance shaft bend**

- Place supports under the No. 1 and No. 3 journals of the balance shaft and measure the bend of the balance shaft at the No. 2 journal. The amount of balance shaft bend is obtained by giving the balance shaft one turn and the dial gauge reading by two.
- If the measurement exceeds the specified limit, replace the balance shaft.

◆Installation procedure◆

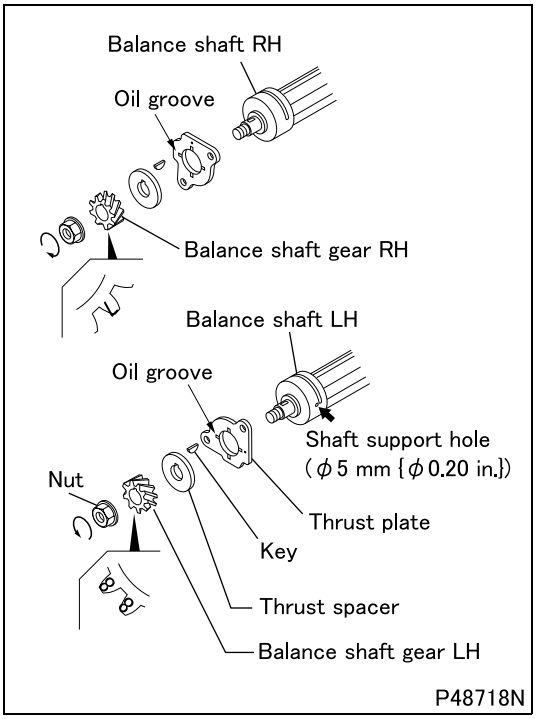

■ Installation: Balance shafts

- Install all the indicated parts on each balance shaft with their ends facing in the illustrated directions.
- Install the balance shaft RH by turning its nut clockwise, and the balance shaft LH by turning its nut counterclockwise.

- Install the balance shaft RH assembly and the balance shaft LH assembly into the crankcase according to the following procedures, which include different instructions between the two balance shafts.
  - The balance shaft RH can be installed in the crankcase without following any special procedure. (The positioning of the gear of the balance shaft RH will be finally determined by installing the oil pump.)

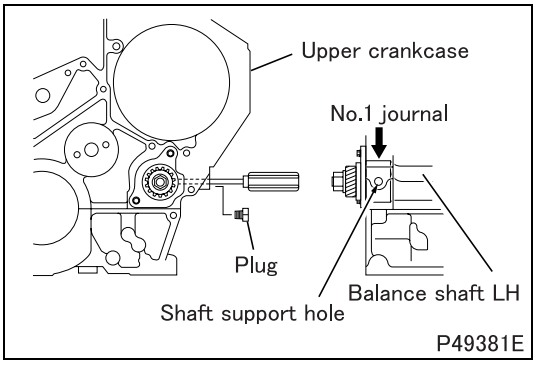

- The gear of the balance shaft LH can be engaged with other gears only after the front case is installed and then the vacuum pump is installed on the crankcase. This necessitates performing the following steps before installing the front case and vacuum pump. (The balance shaft LH cannot be rotated to adjust the gear position after the front case is installed on the crankcase.)
- Remove the plug on the upper crankcase.
- Insert a screwdriver through the plug hole and into the shaft support hole (diameter: 5 mm {0.20 in.}) on the No. 1 journal of the balance shaft LH to hold the shaft against rotation.
- Align the mating marks on each timing gear.
- This positions the balance shaft LH correctly. Leave the balance shaft in this state until installation of the front case and vacuum pump is completed.

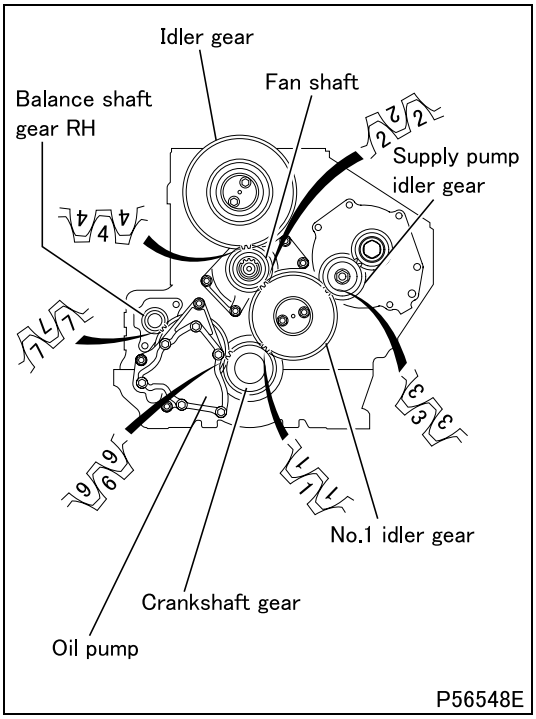

■ **Installation: Timing gears**

- Place the No. 1 cylinder piston at top dead center to position the crankshaft gear.
- Install the oil pump gear by aligning mating mark “6” with that on the crankshaft gear, and mating mark “7” with that on the balance shaft gear RH.
- Install the No. 1 idler gear by aligning mating mark “1” with that on the crankshaft gear.
- Install the fan shaft by aligning mating mark “2” with that on the No. 1 idler gear.
- Install the idler gear by aligning mating mark “4” with that on the fan shaft.
- Install the supply pump idler gear by aligning mating mark “3” with that on the No.1 idler gear.

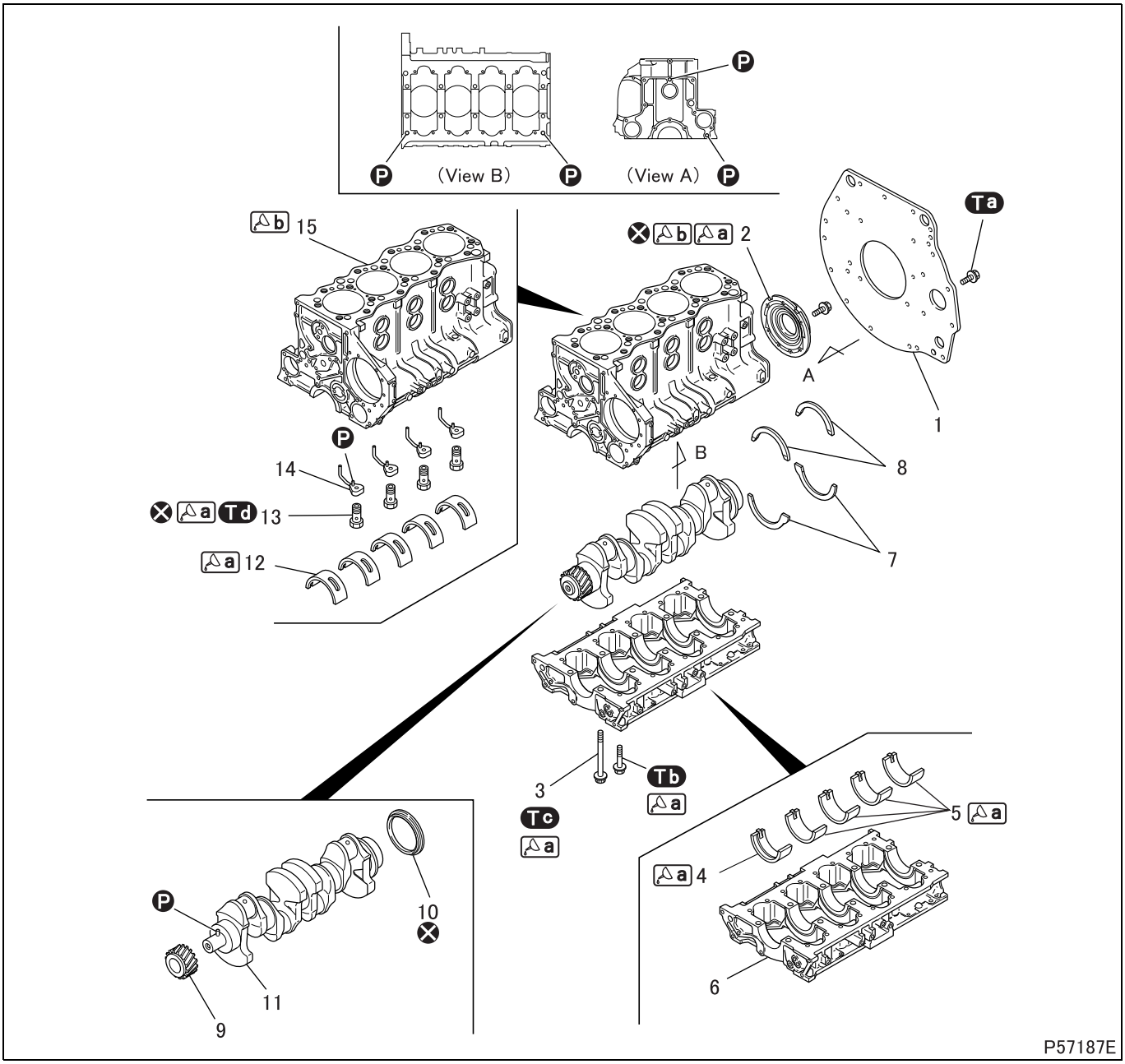

● **Disassembly sequence**

1 Rear plate
2 Rear oil seal
3 Main bearing cap bolt
4 No.1 Lower bearing
5 Lower main bearing
6 Lower crankcase
7 Lower thrust plate
8 Upper thrust plate
9 Crankshaft gear
10 Rear oil seal slinger
11 Crankshaft
12 Upper main bearing
13 Check valve
14 Oil jet
15 Upper crankcase

Ⓟ: Locating pin
⊗: Non-reusable parts

CAUTION ⚠

- **The lower crankcase and the upper crankcase are machined as a matched set, and cannot be replaced individually.**

● Assembly sequence

Follow the disassembly sequence in reverse.

CAUTION ⚠

- **The main bearing cap bolts are tightened using the torque-turn tightening method. Any bolt that has three punch marks must be replaced.**
- **Do not overtighten the check valve. If it is tightened to a torque exceeding the specification, the check valve may malfunction, resulting in seizures in the engine.**
- **The No. 1 lower bearing has a oil groove. Be sure to install it in the correct position, otherwise a crankshaft seizure may result.**

Service standards (Unit: mm {in.})

Location	Maintenance item			Standard value	Limit	Remedy
–	Crankshaft end play			0.10 to 0.28 {0.0039 to 0.011}	0.4 {0.016}	Replace thrust plate
4, 5, 12	Main bearing	Oil clearance	All except No. 3	0.038 to 0.1 {0.0015 to 0.0039}	0.15 {0.0059}	Replace
			No. 3	0.058 to 0.12 {0.0023 to 0.0047}		
		Span when free		–	Less than 91.5 {3.60}	
11	Crankshaft	Bend		0.02 {0.00079} or less	0.05 {0.0020}	Replace
		Pins and journals	Out-of-roundness	0.01 {0.00039} or less	0.03 {0.0012}	Rectify or replace
			Taper	0.006 {0.00024} or less	–	
		Center-to-center distance between the journal and pin		60 ± 0.05 {2.36 ± 0.002}	–	
		Journal width	No. 1	33.5 {1.32}		
			No. 2 to 4	35 {1.38}		
			No. 5	$35\ ^{+0.039}_{0}$ {$1.38\ ^{+0.0015}_{0}$}	–	
		Pin width		$41\ ^{+0.12}_{0}$ {$1.61\ ^{+0.0047}_{0}$}	–	
		Fillet		R4	–	
15	Upper crankcase	Distortion of upper crankcase top surface		0.07 {0.0028} or less	0.2 {0.0079}	Rectify or replace
		Cylinder block	Out-of-roundness	0.005 or less {0.0002 or less}	–	Replace
			Taper	0.015 or less {0.00059 or less}	–	

Tightening torque (Unit: N·m {ft.lbs, kgf·m})

Mark	Parts to be tightened	Tightening torque	Remarks
Ta	Bolt (rear plate installation)	63.7 {47, 6.5}	–
Tb	Bolt (lower crankcase installation)	23.5 {17, 2.4}	Wet
Tc	Main cap bolt (lower crankcase installation)	49 {36, 5.0} +90°	Wet Reusable up to 3 times
Td	Check valve	29.4 {22, 3.0}	Wet

Lubricant and/or sealant

Mark	Points of application	Specified lubricant and/or sealant	Quantity
a	Rear oil seal lip	Engine oil	As required
	Bolt and main bearing cap bolt threads and seating surface of head		
	Main bearing inside surface		
	Check valve threads		
b	Upper and lower crankcase mating surface of rear oil seal	ThreeBond 1217H	As required
	Lower crankcase mounting surface of upper crankcase		

Special tools (Unit: mm {in.})

Mark	Tool name and shape	Part No.	Application
a	Gear puller 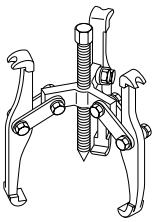 P02065	MH061326	Removal of crankshaft gear
b	Rear oil seal slinger installer A: φ103 {φ4.06}, B: φ100 {φ3.94}, C: φ15 {φ0.59} 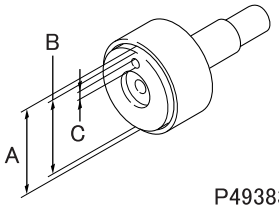 P49383	MH062677	Installation of rear oil seal slinger

◆Inspection before removal◆

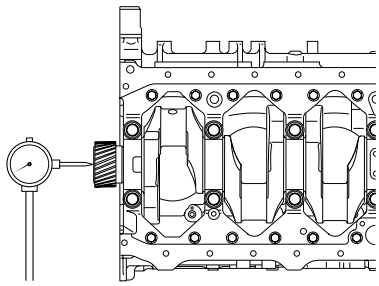 P29413

■ **Inspection: Crankshaft end play**

- If the measurement exceeds the specified limit, replace the thrust plates with oversize ones.
- Available oversizes:
  +0.15 mm, +0.30 mm, +0.45 mm {0.0059, 0.012, 0.018 in.}
- Replace the crankshaft if the end play is too large to adjust using oversize thrust plates.

◆Removal procedure◆

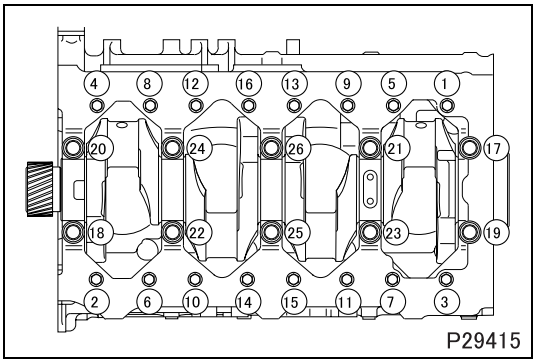 P29415

■ **Removal: Lower crankcase**

- Loosen the bolts little by little in the order indicated in the illustration (1 to 16).
- After loosening the bolts, loosen the main cap bolts little by little in the order indicated in the illustration (17 to 26), then remove the main cap bolts.

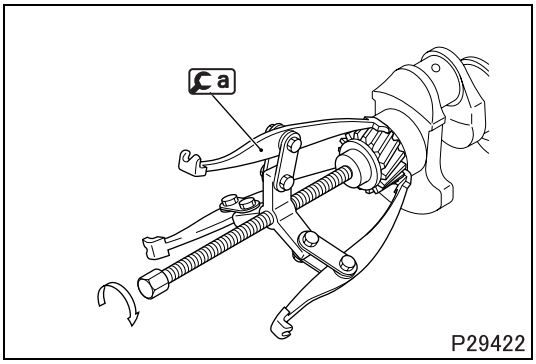

■ **Removal: Crankshaft gear**

CAUTION ⚠

- **Do not tap off the crankshaft gear as this can damage it.**

■ **Removal: Rear oil seal slinger**

- Taking care not to damage the crankshaft, split the rear oil seal slinger using a chisel or a similar tool.

◆Inspection procedure◆

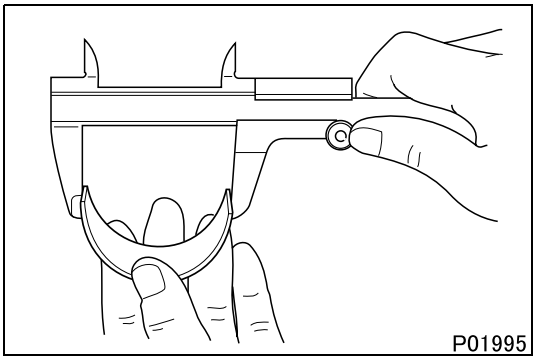

■ **Inspection: Main bearing span when free**

CAUTION ⚠

- **Do not attempt to manually expand the bearings.**

- If the measurement is less than the limit, replace upper and lower bearings as a set.

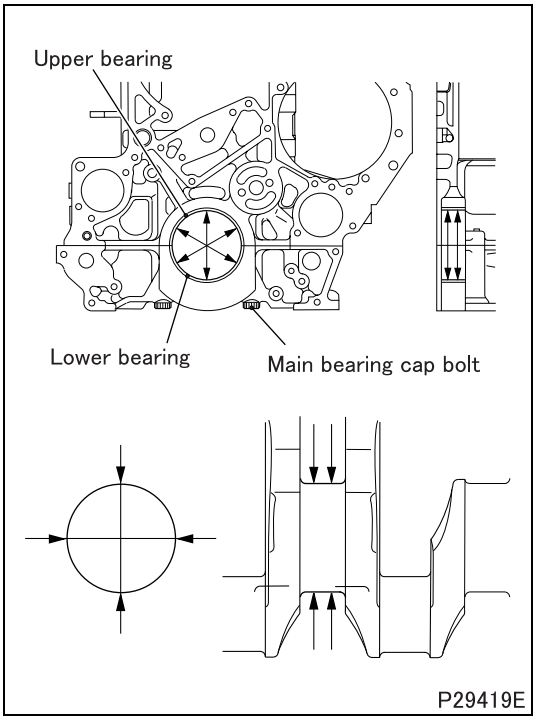

■ **Inspection: Main bearing-to-crankshaft clearance**

- Fit the upper bearing into the upper crankcase and the lower bearing into the lower crankcase.
- Tighten the main bearing cap bolts to a torque of 49 N·m {36 ft.lbs, 5.0 kgf·m}.
- Measure the inside diameter of the main bearing and the diameter of the corresponding crankshaft journal.
- If the difference between the measurements exceeds the specified limit, machine the crankshaft journal to one of the specified undersize dimensions indicated on the next page.

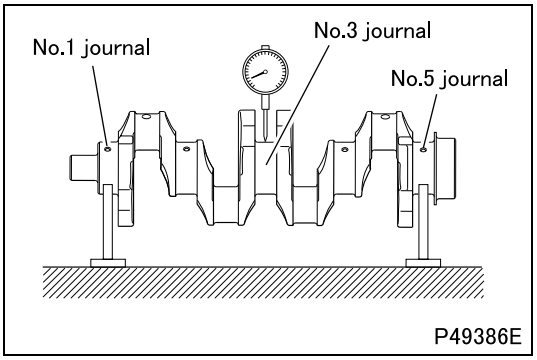

■ **Inspection: Crankshaft**

(1) Bend

- Support the crankshaft at its No. 1 journal and No. 5 journal. Measure the extent of bending in the crankshaft at the center of the No. 3 journal. The amount of crankshaft bend is obtained by giving the crankshaft one turn and dividing the dial gauge reading by two.
- If the measurement exceeds the specified limit, replace the crankshaft.

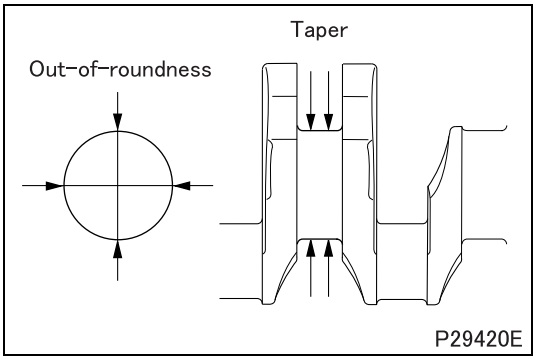

(2) Out-of-roundness and taper of crankshaft journals and pins

- If any of the measurements exceeds the specified limits, grind the crankshaft journal(s) and/or pin(s) to undersize(s) or replace the crankshaft.

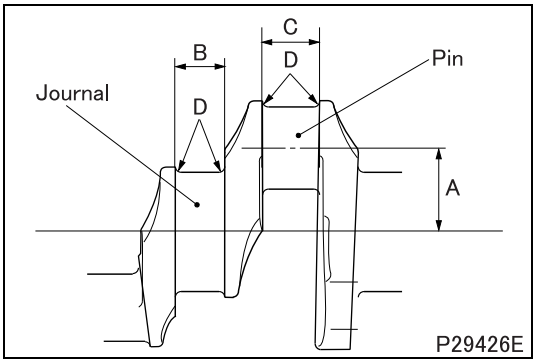

Grinding of crankshaft

CAUTION ⚠

- **If the crankshaft is ground to an undersize, the main bearings must be replaced with the undersize ones of the corresponding undersize.**

- Confirm the dimension of each position from the service standards table and rectify the crankshaft while observing the following procedures.
- Do not change the center-to-center distance A between the journal and pin.
- Do not change the journal width B and the pin width C.
- Finish the fillets D smoothly.
- Carry out a magnetic inspection to check for cracks possibly caused by grinding. Also, check that the harness of the surface has not dropped below Shore hardness number (Hs) 75.
- Replace the crankshaft if defects are evident.

Crankshaft undersize dimensions (Unit: mm {in.})

		Undersizes			
		0.25 {0.0098}	0.50 {0.020}	0.75 {0.030}	1.00 {0.039}
Finished journal diameter	No. 1, 2, 4, 5	85.68 to 85.70 {3.37 to 3.37}	85.43 to 85.45 {3.36 to 3.36}	85.18 to 85.20 {3.35 to 3.35}	84.93 to 84.95 {3.34 to 3.34}
	No. 3	85.66 to 85.68 {3.37 to 3.37}	85.41 to 85.43 {3.36 to 3.36}	85.16 to 85.18 {3.35 to 3.35}	84.91 to 84.93 {3.34 to 3.34}
Finished pin diameter		64.69 to 64.71 {2.55 to 2.55}	64.44 to 64.46 {2.54 to 2.54}	64.19 to 64.21 {2.53 to 2.53}	63.94 to 63.96 {2.52 to 2.52}
Out-of-roundness		0.01 {0.00039} or less			
Taper		0.006 {0.00024} or less			

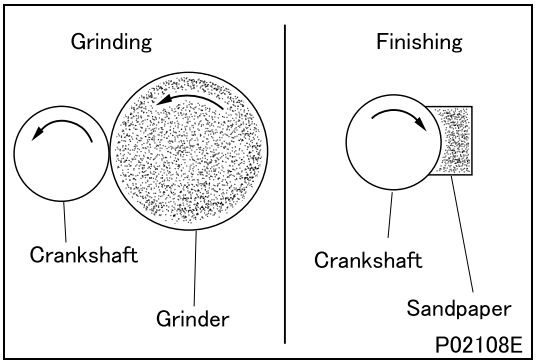

- When grinding, turn both the crankshaft and the grinder counterclockwise as viewed from the crankshaft front end.
- When finishing the crankshaft with whetstone or sandpaper, rotate the crankshaft clockwise.

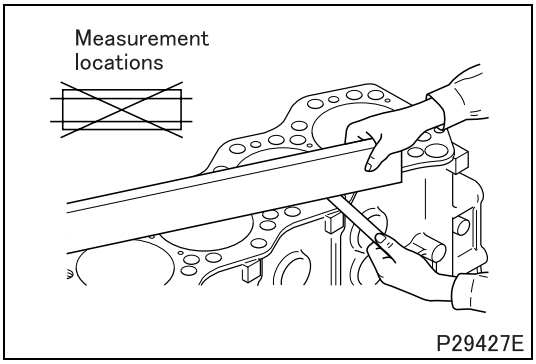

■ Inspection: Distortion of upper crankcase top surface

- If the measurement exceeds the specified limit, grind the crankcase top surface with a surface grinder.
- Limit the amount of removed metal to make sure that the amount of piston projection above the crankcase top surface stays within the standard value range. (See PISTONS, CONNECTING ROD AND CYLINDER LINERS section.)

◆Installation procedure◆

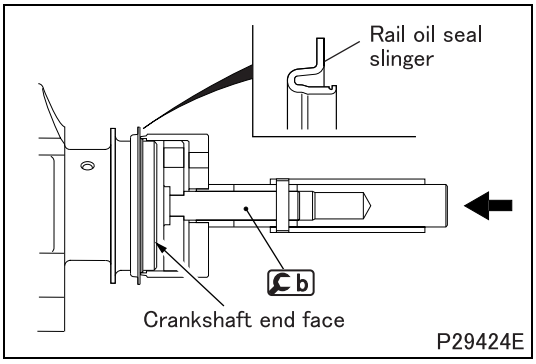

■ Installation: Rear oil seal slinger

- Press in the rear oil seal slinger until b sits snugly on the crankshaft end surface.

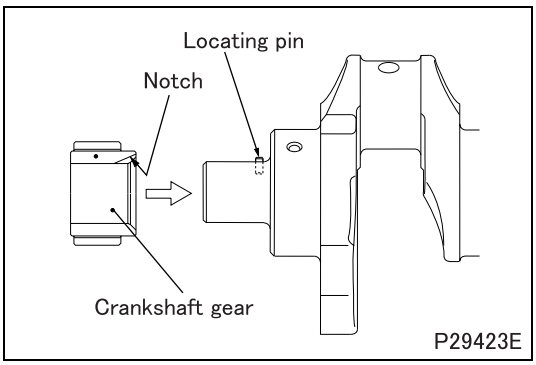

■ Installation: Crankshaft gear

- Heat the crankshaft gear to approximately 150°C {300°F} with a gas burner or the like.

CAUTION ⚠

- **Be careful not to get burned.**

- Align the locating pin in the crankshaft with the slot in the crankshaft gear. Drive the gear into position by lightly striking its end face with a plastic hammer.

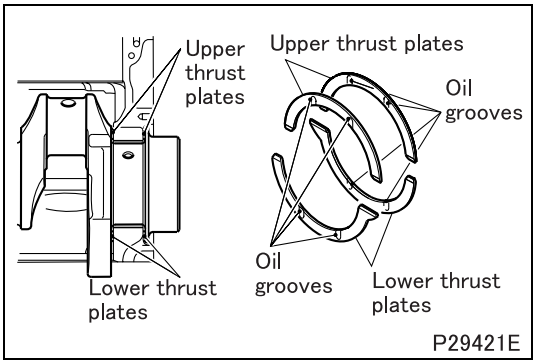

■ **Installation: Thrust plate**

- Install the thrust plates on both sides of the rearmost main bearing with the oil grooves on the inner plates facing inward and those on the outer plates outward as shown in the illustration.

CAUTION ⚠

- **Be sure to orient the oil grooves as indicated above, otherwise seizures may occur in the engine.**

- Use oversize thrust plates when adjusting the crankshaft end play. The upper and lower thrust plates on the same side must be of the same size. The thrust plates on one side may differ in size from those on the other side.

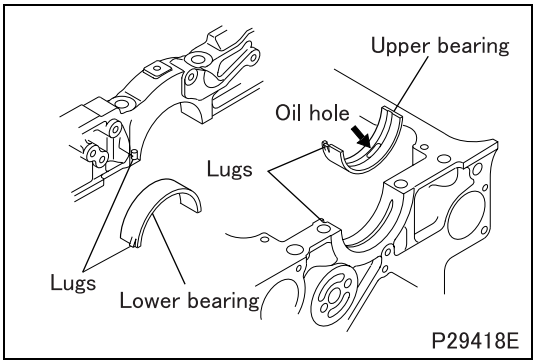

■ **Installation: Main bearings**

- Install the main bearings with their lugs aligned as shown in the illustration. When the crankshaft journals have been ground to an undersize, use undersize main bearings.
  Available main bearing undersizes:
  0.25 mm {0.0098 in.}, 0.50 mm {0.020 in.}, 0.75 mm {0.030 in.}, 1.00 mm {0.039 in.}

CAUTION ⚠

- **The upper main bearing has an oil hole. The lower main bearing has no oil hole. Do not confuse the upper and lower bearings, as this can cause seizure in the engine.**

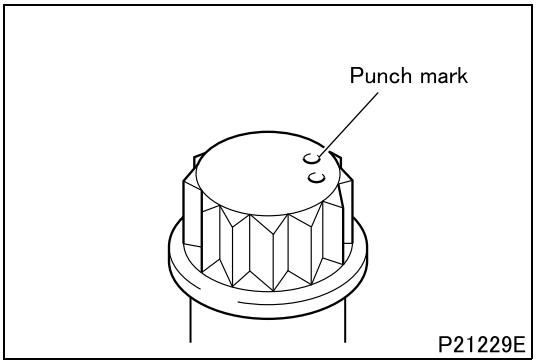

■ **Installation: Lower crankcase**

CAUTION ⚠

- **Before installing the main bearing cap bolts, check the number of punch marks on the head of each bolt. (A bolt with two or less marks is reusable.)**
- **The number of punch marks corresponds with the number of times the main cap bolt has been tightened using the torque-turn tightening method. Any bolt that has three marks (i.e. that has been used three times) must be replaced.**

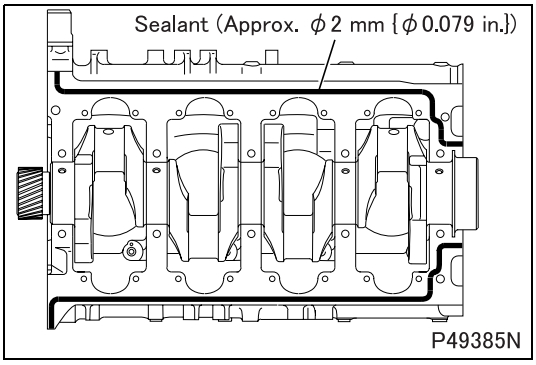

- Clean all sealant application surfaces.
- Apply evenly thick beads of sealant to the upper crankcase without any breaks as shown in the illustration.
- Install the lower crankcase within three minutes of applying the sealant, being careful not to dislodge the sealant.

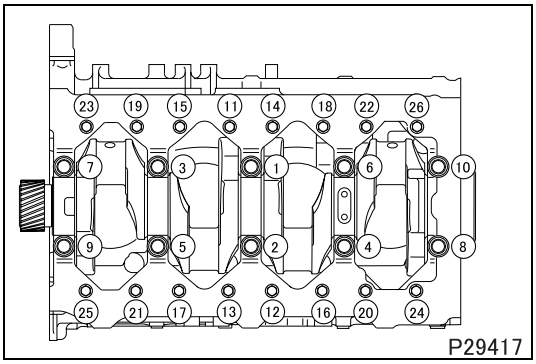

P29417

- Apply engine oil to the main cap bolt threads and seating surfaces of the bolt heads, then tighten them to a torque of 49 N·m {36 ft.lbs, 5.0 kgf·m} in the order indicated in the illustration (1 to 10).
- Tighten each main cap bolt further by 90° in the same order.
- Finally, tighten each bolt to the specified torque in the order indicated in the illustration (11 to 26).

CAUTION ⚠

- **After installing the bolts, wait at least an hour before starting the engine.**
- **Apply new beads of sealant whenever the main cap bolts have been loosened or removed.**

- After tightening the bolts using the above torque-turn tightening method, make a punch mark on the head of each bolt to indicate the number of times that it has been used.

CAUTION ⚠

- **The bolts that have been tightened using the torque-turn method must never be additionally tightened after the final angular tightening.**

- After installing the main bearing caps, rotate the crankshaft by hand. If it cannot be rotated smoothly, inspect the main bearing caps for correct installation.

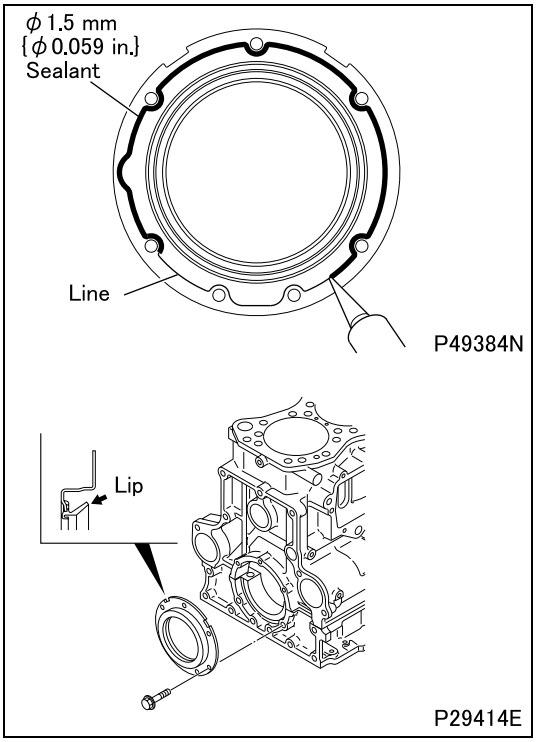

■ Installation: Rear oil seal

- Apply engine oil to the lip of the rear oil seal.
- Clean the seal surface of the crankshaft.
- Apply a bead of sealant along the line on the rear oil seal evenly without any breaks.
- Install the rear oil seal within three minutes after applying the sealant. Be careful not to let the applied sealant slip out of place during installation.

CAUTION ⚠

- **After fitting the rear oil seal, wait at least an hour before starting the engine.**
- **Apply a new bead of sealant whenever the mounting bolts of the rear oil seal have been loosened.**

BALANCE SHAFT BUSHINGS

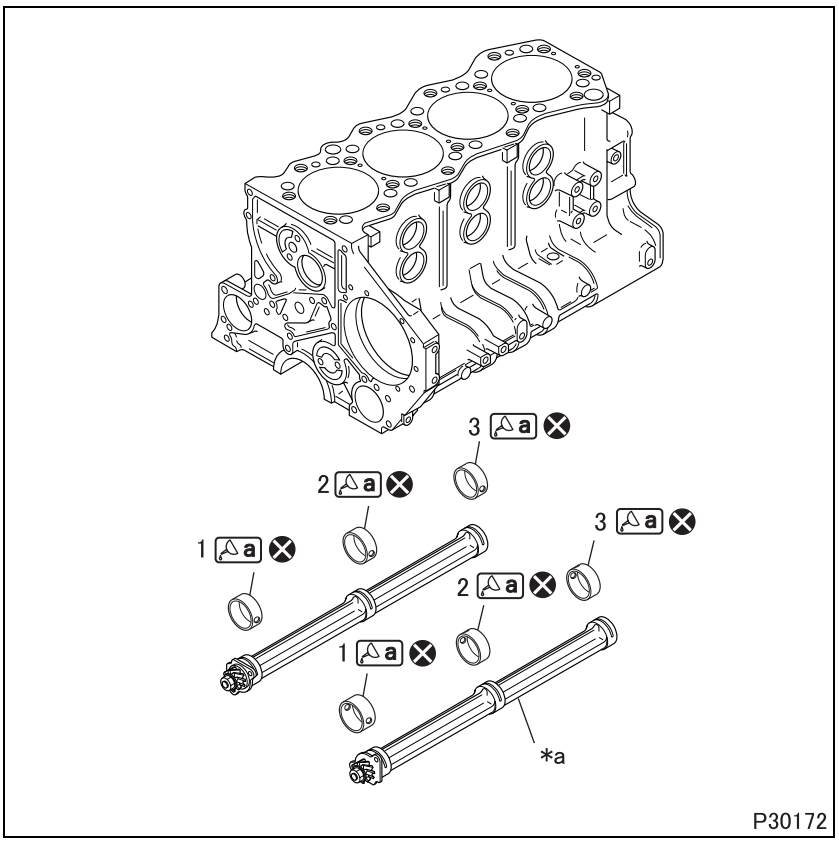

● **Disassembly sequence**

1 No. 1 balance shaft bushing
2 No. 2 balance shaft bushing
3 No. 3 balance shaft bushing

***a**: Balance shaft
⊗: Non-reusable parts

● **Assembly sequence**

Follow the disassembly sequence in reverse.

Service standards (Unit: mm {in.})

Location	Maintenance item		Standard value	Limit	Remedy
1 to 3, *a	Balance shaft journal-to-balance shaft bushing clearance	No. 1	0.055 to 0.099 {0.0022 to 0.0039}	0.15 {0.0059}	Replace
		No. 2	0.075 to 0.119 {0.030 to 0.0047}		
		No. 3	0.055 to 0.099 {0.0022 to 0.0039}		

Lubricant and/or sealant

Mark	Points of application	Specified lubricant and/or sealant	Quantity
a	Balance shaft bushing inner surface	Engine oil	As required

Special tools

Mark	Tool name and shape	Part No.	Application
a	Balance shaft bushing installer and extractor 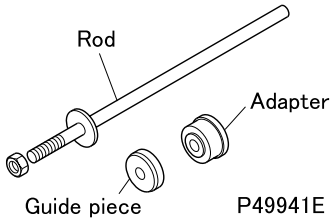	MH062782	Removal and installation of balance shaft bushing

◆Inspection procedure◆

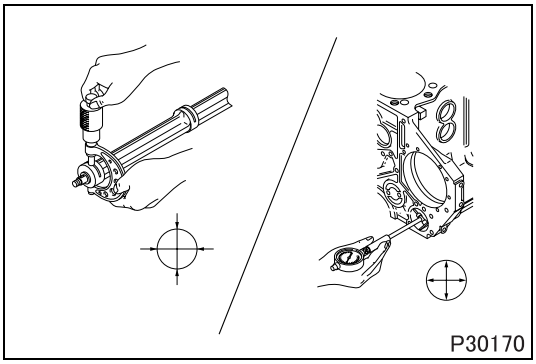

■ **Inspection: Balance shaft-to-balance shaft bushing clearance**

- Replace the bushing if the measurement exceeds the specified limit.

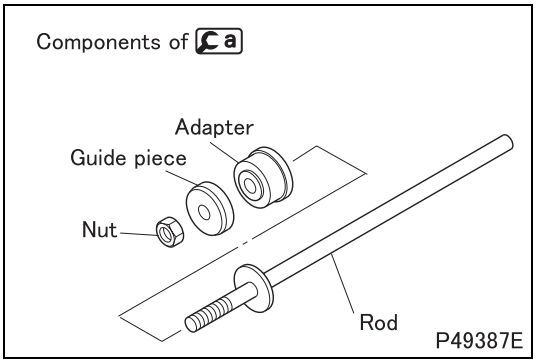

Replacement of balance shaft bushing

- Replace the bushing using a.

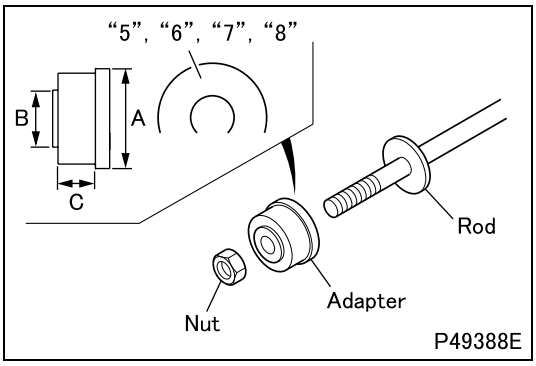

[Removal]

- To remove the bushings, use the rod fitted with an adapter corresponding to the size of each bushing.

Unit: mm {in.}

Bushing		Adapter			
		Identification mark	A	B	C
No. 1	Left	"5"	ϕ55.25 {ϕ2.18}	ϕ51.5 {ϕ2.03}	26.5 {1.04}
	Right	"6"			21.5 {0.85}
No. 2		"7"	ϕ55 {ϕ2.17}	ϕ51 {ϕ2.01}	
No. 3		"8"	ϕ54.75 {ϕ2.16}	ϕ50.5 {ϕ1.99}	

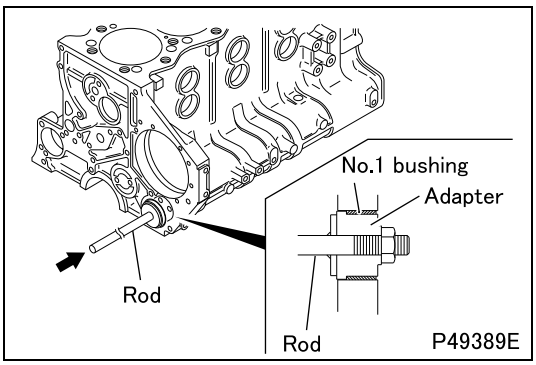

- Remove the No. 1 bushing by tapping on the rod from the front of the engine.

BALANCE SHAFT BUSHINGS

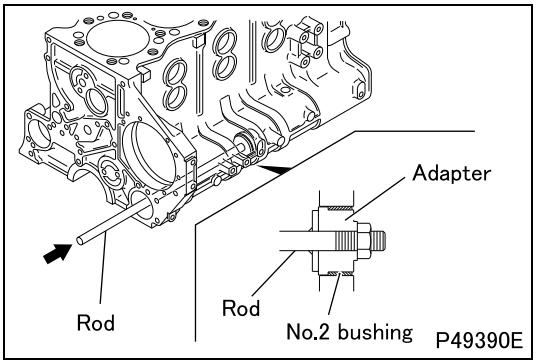

- Remove the No. 2 bushing by tapping on the rod from the front of the engine.

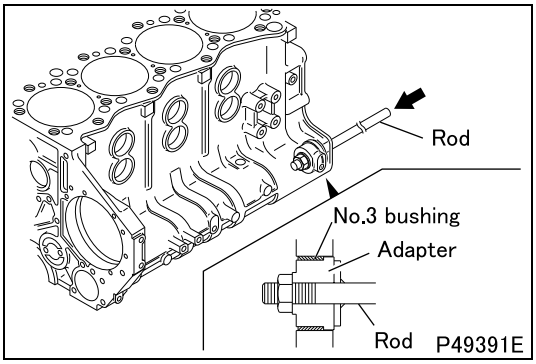

- Remove the No. 3 bushing by tapping on the rod from the back of the engine.

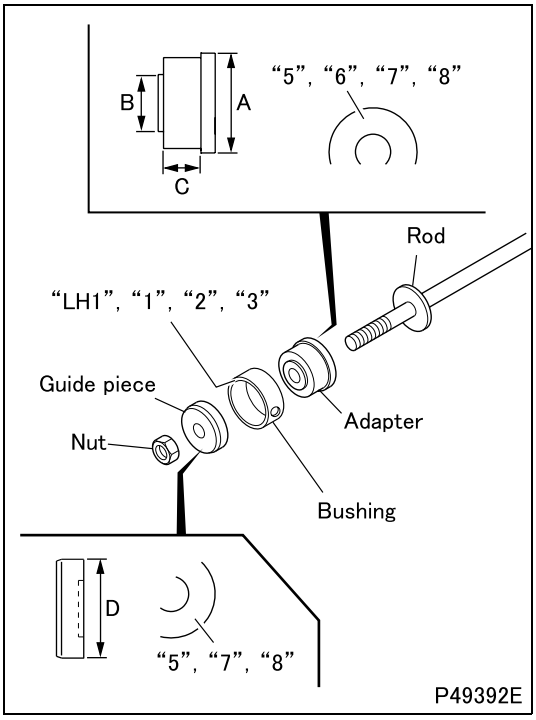

[Installation]

- To install the bushings, use the rod fitted with an adapter corresponding to the size of each bushing. Each bushing has an identification mark. These identification marks are used to distinguish between the No. 1, No. 2 and No. 3 bushings. If the identification mark is not clear, measure the outside diameter of the bushing and use the measurement as a means of identification.

Unit: mm {in.}

Bushing				Adapter				Guide piece	
		Identification mark	Outside diameter	Identification mark	A	B	C	Identification mark	D
No. 1	Left	"LH1"	ϕ55.25 {ϕ2.18}	"5"	ϕ55.25 {ϕ2.18}	ϕ51.5 {ϕ2.03}	26.5 {1.04}	"5"	ϕ55.25 {ϕ2.18}
	Right	"1"	ϕ55.25 {ϕ2.18}	"6"			21.5 {0.85}	"6"	
No. 2		"2"	ϕ55 {ϕ2.17}	"7"	ϕ55 {ϕ2.17}	ϕ51 {ϕ2.01}		"7"	ϕ55 {ϕ2.17}
No. 3		"3"	ϕ54.75 {ϕ2.16}	"8"	ϕ54.75 {ϕ2.16}	ϕ50.5 {ϕ1.99}		"8"	ϕ54.75 {ϕ2.16}

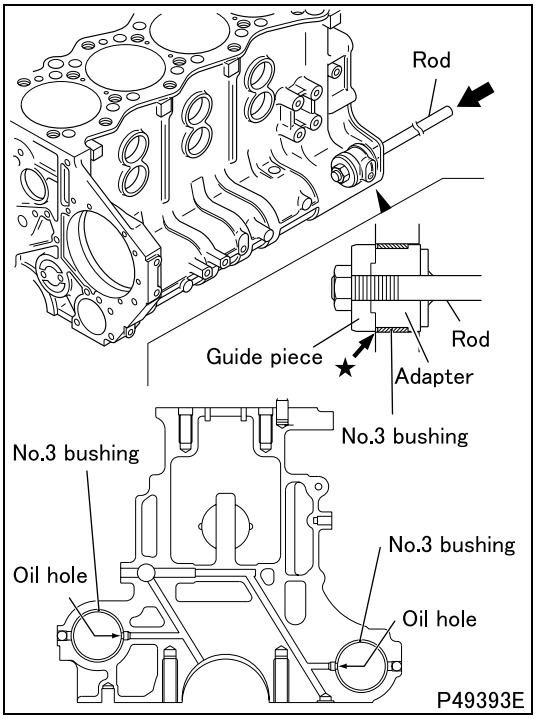

- Align the oil hole in the No. 3 bushing with the oil hole in the upper crankcase.
- Force the No. 3 bushing into the upper crankcase as deep as the ★ mark in the illustration by tapping on the rod from the rear of the engine.

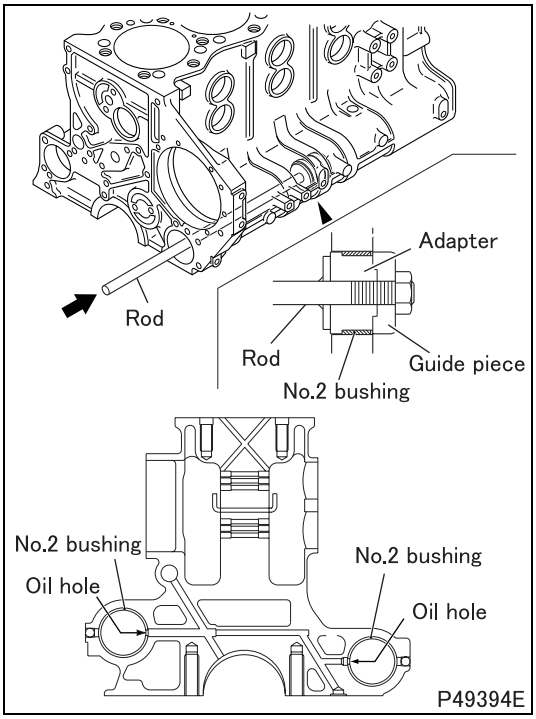

- Align the oil hole in the No. 2 bushing with the oil hole in the upper crankcase.
- Force the No. 2 bushing into the upper crankcase to the illustrated position by tapping on the rod from the front of the engine.

BALANCE SHAFT BUSHINGS

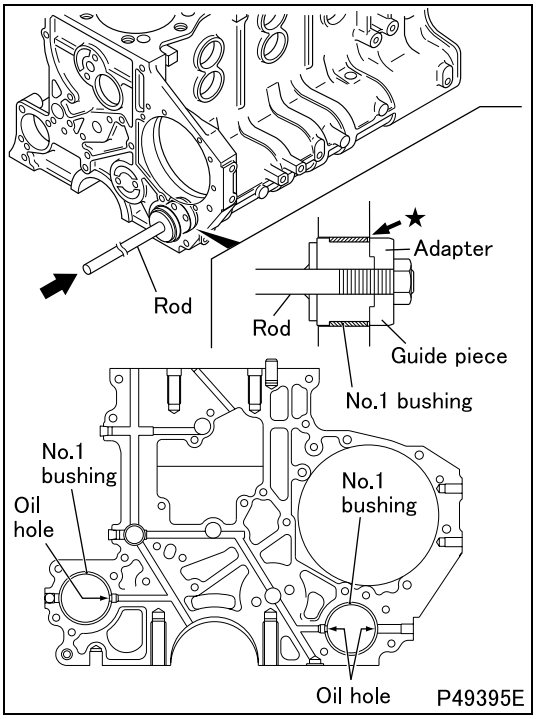

- Align the oil hole(s) in the No. 1 bushing with the oil hole(s) in the upper crankcase.
- Force the No. 1 bushing into the upper crankcase as deep as the ★ mark in the illustration by tapping on the rod from the front of the engine.

CAUTION ⚠

- **The left and right No. 1 bushings are different from each other, and should not be installed in reverse positions.**
- **The left No. 1 bushing has two oil holes, whereas the right No. 1 bushing has only one oil hole.**

Group 12

Lubrication

Table of Contents

Back

Home

MITSUBISHI FUSO TRUCK OF AMERICA, Inc.

Pub.No.TWSE0805-12

INDEX

SPECIFICATIONS 12-2

STRUCTURE AND OPERATION

1. **Lubrication System..... 12-3**
2. **Oil Pump 12-4**
3. **Oil Cooler..... 12-5**
4. **Oil Filter 12-6**
5. **Lubrication of Engine Components 12-7**

TROUBLESHOOTING..... 12-10

ON-VEHICLE INSPECTION AND ADJUSTMENT

1. **Oil Filter Replacement..... 12-12**
2. **Engine Oil Replacement..... 12-16**
3. **Engine Oil Level Inspection.....12-18**
4. **Oil Pressure Measurement..... 12-19**

OIL PAN, OIL STRAINER AND OIL JETS..... 12-20

OIL PUMP..... 12-22

OIL FILTER..... 12-26

OIL COOLER..... 12-30

SPECIFICATIONS

Item			Specifications
Method of lubrication			Forced lubrication by oil pump
Oil filter			Spin-on filter paper type
Oil cooler			Shell and plate type (multiple-plate type)
Engine oil	Grade		API classification CJ-4
	Quantity L (qts)	Oil pan	Approx. 7 {7.4}
		Oil filter	Approx. 1 {1.1}
Regulator valve opening pressure		kPa {psi, kgf/cm^2}	600 $^{+100}_{0}$ {87 $^{+15}_{0}$, 6 $^{+1}_{0}$ }
Bypass valve opening pressure		kPa {psi, kgf/cm^2}	390 ± 29 {57 ± 4.2, 4.0 ± 0.3}

1. Lubrication System

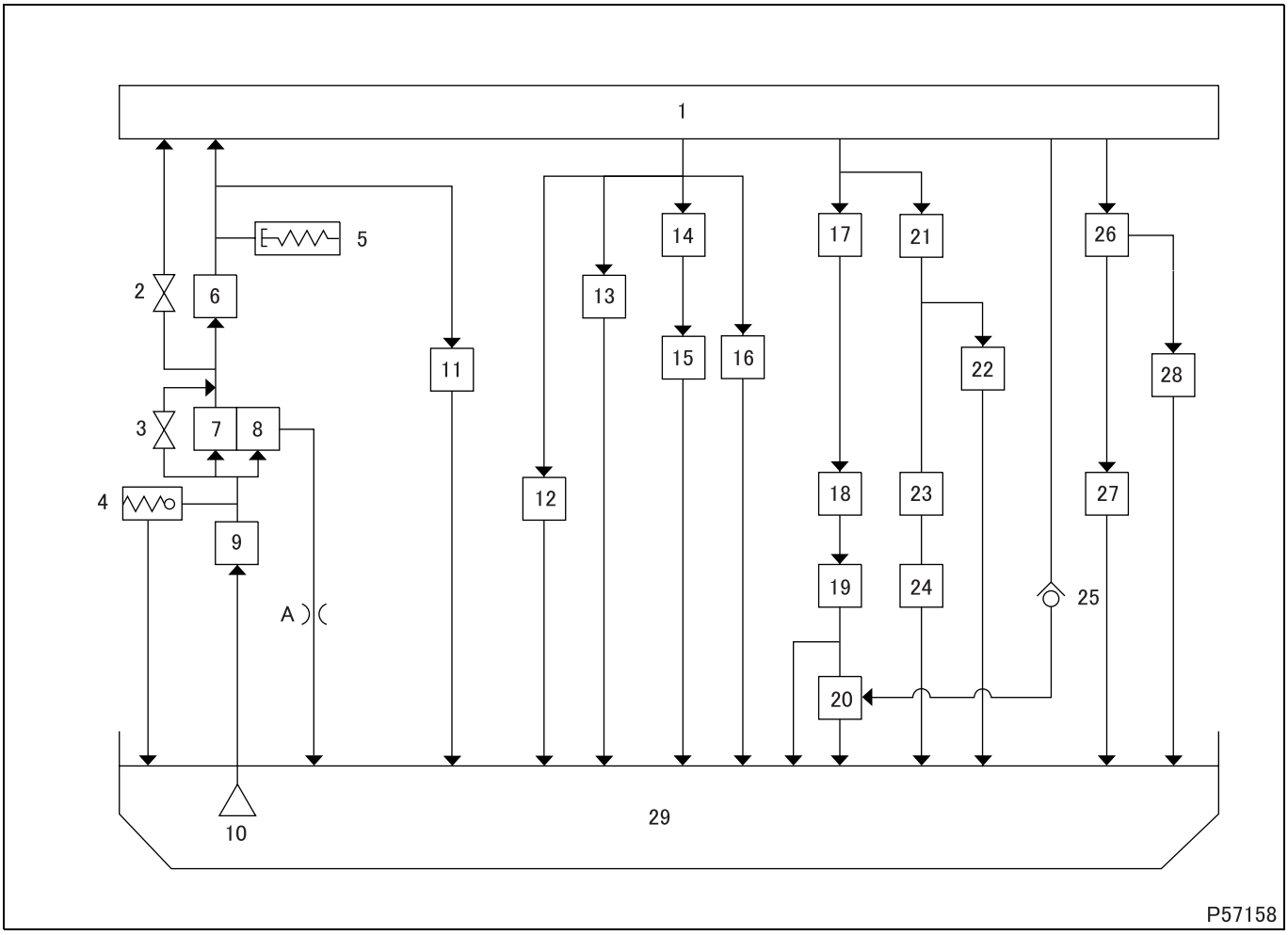

1 Main oil gallery
2 Bypass valve
3 Bypass valve
4 Regulator valve
5 Engine oil pressure switch
6 Oil cooler
7 Full-flow filter element
8 Bypass filter element
9 Oil pump
10 Oil strainer
11 Turbocharger
12 Oil jet for gear
13 Vacuum pump
14 Idler bushing
15 Timing gear
16 Balance shaft bushing LH
17 Crankshaft main bearing
18 Connecting rod bearing
19 Connecting rod bushing
20 Piston
21 Balance shaft bushing RH
22 Supply pump gear bushing
23 Supply pump idler gear bushing
24 Supply pump idler gear shaft
25 Check valve for oil jet
26 Rocker bushing
27 Camshaft bushing
28 Rocker roller
29 Oil pan

A: Orifice

2. Oil Pump

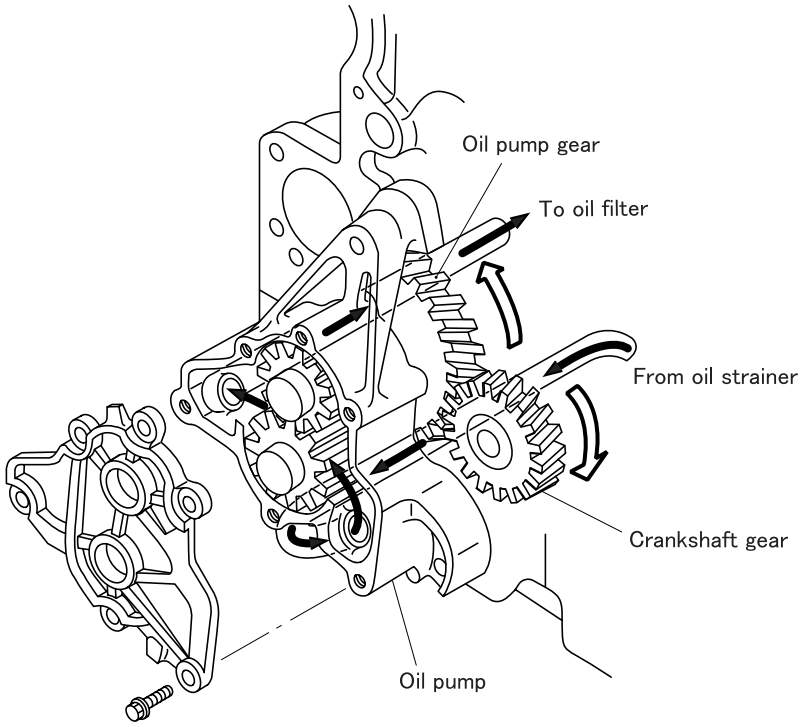

- This engine uses a gear-type oil pump driven by the rotation of the crankshaft transmitted through the engagement of the crankshaft gear and the oil pump gear.

3. Oil Cooler

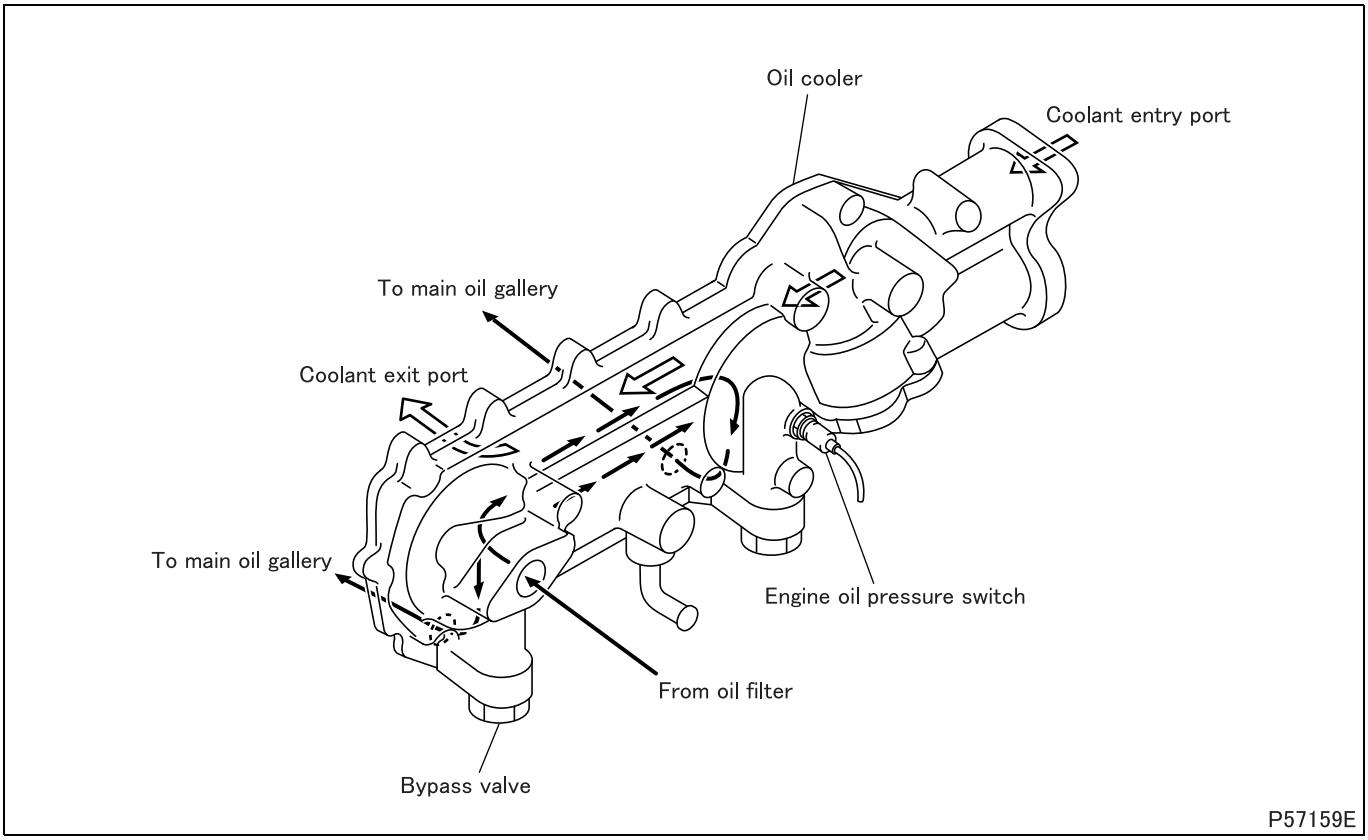

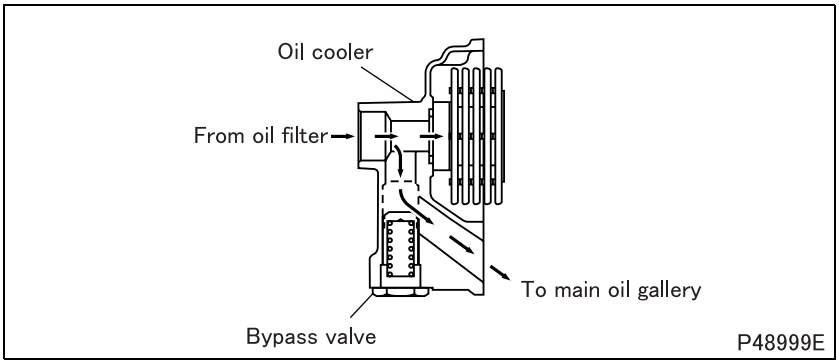

3.1 Bypass valve

- When the engine oil is cool and its viscosity is high, or when the oil cooler element becomes clogged and restricts the flow of the engine oil, the bypass valve opens to let the engine oil bypass the oil cooler and flow directly to the main oil gallery.

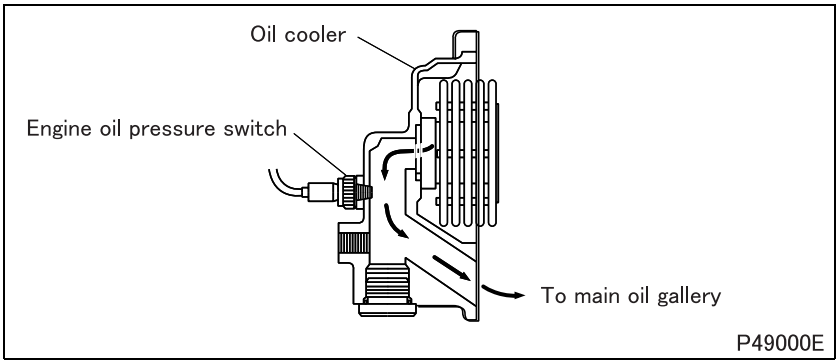

3.2 Engine oil pressure switch

- When the pressure of the engine oil to the main oil gallery drops below the specified level, an electrical contact inside the engine oil pressure switch closes.
- This causes a warning lamp on the meter cluster to illuminate and notify the operator of the excessive pressure drop.

4. Oil Filter

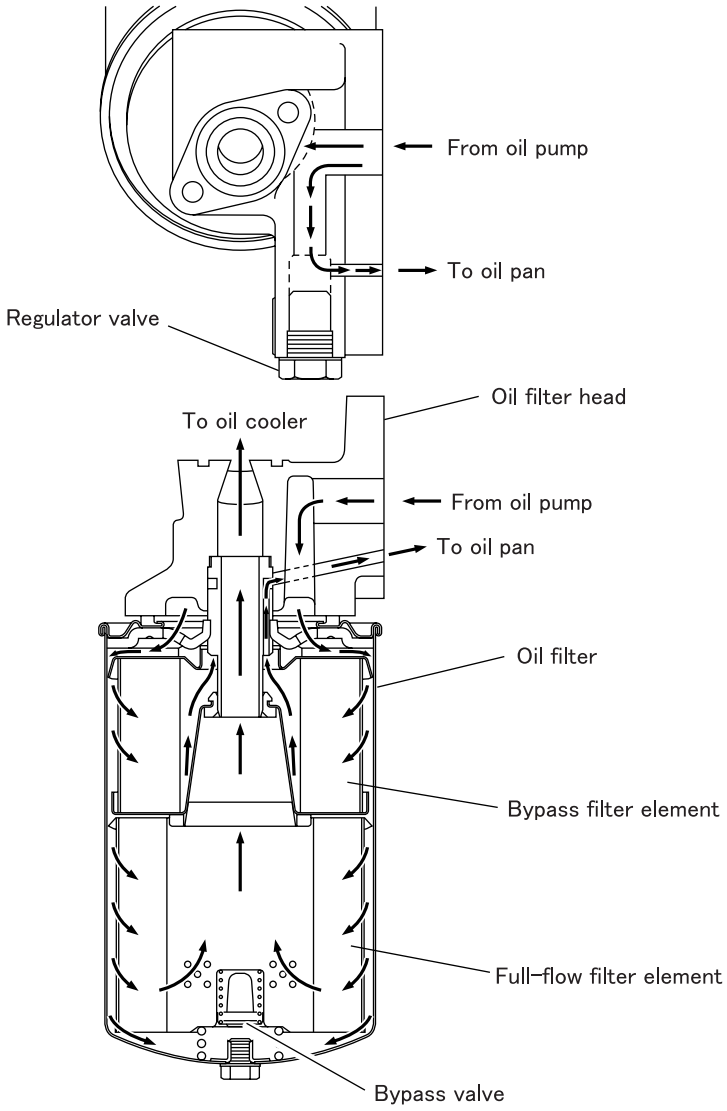

- The oil filter used in this engine is a spin-on, paper-filter type that incorporates both a bypass filter and a full-flow filter.
- A bypass valve is installed in the lower part of the oil filter. When the filter elements are clogged, this valve opens to let the engine oil bypass the filter elements and flow directly to the oil cooler, thereby preventing seizures in the engine.
- A regulator valve is installed on the oil filter head. When the oil pressure in the main oil gallery exceeds the specified level, the regulator valve opens to adjust the oil pressure by returning part of the engine oil to the oil pan.

5. Lubrication of Engine Components

- The engine oil in the main oil gallery lubricates the engine components in the following ways.

5.1 Main bearing and connecting rod bearing

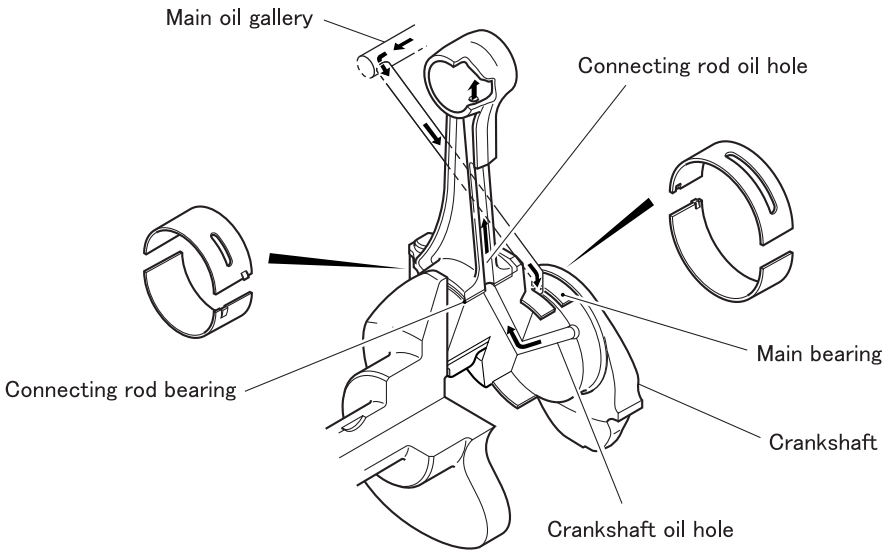

- Engine oil supplied through an oil passage in the crankshaft lubricates the big end (connecting rod bearing) of each connecting rod. Simultaneously, engine oil supplied through an oil passage in the connecting rod lubricates the connecting rod's small end.

5.2 Timing gears

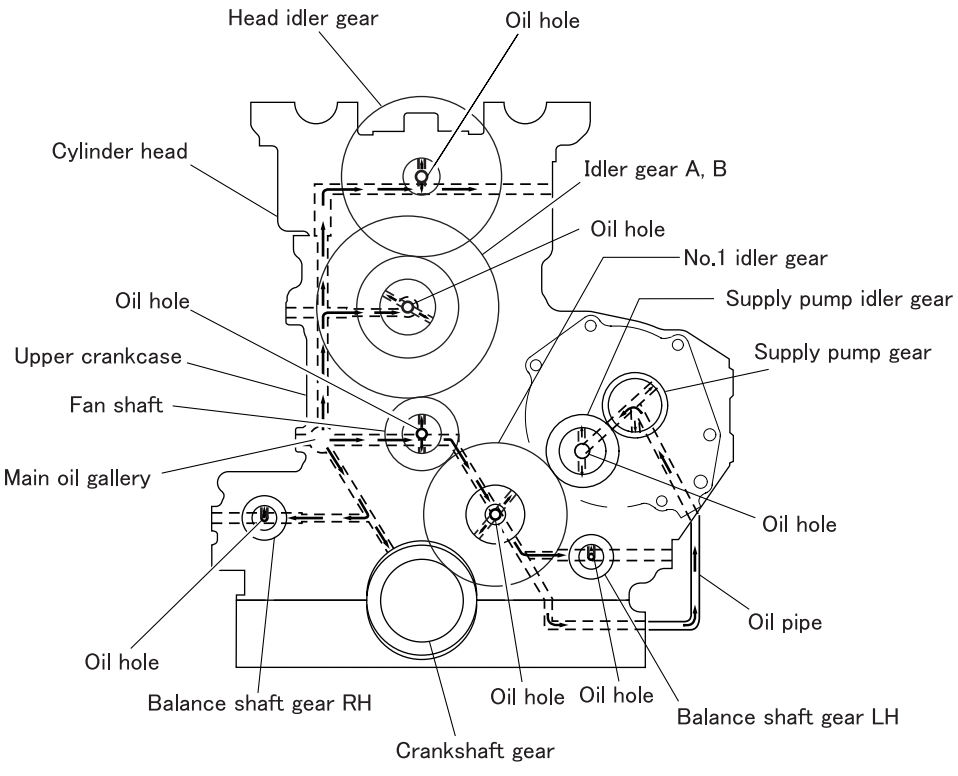

5.3 Valve mechanism

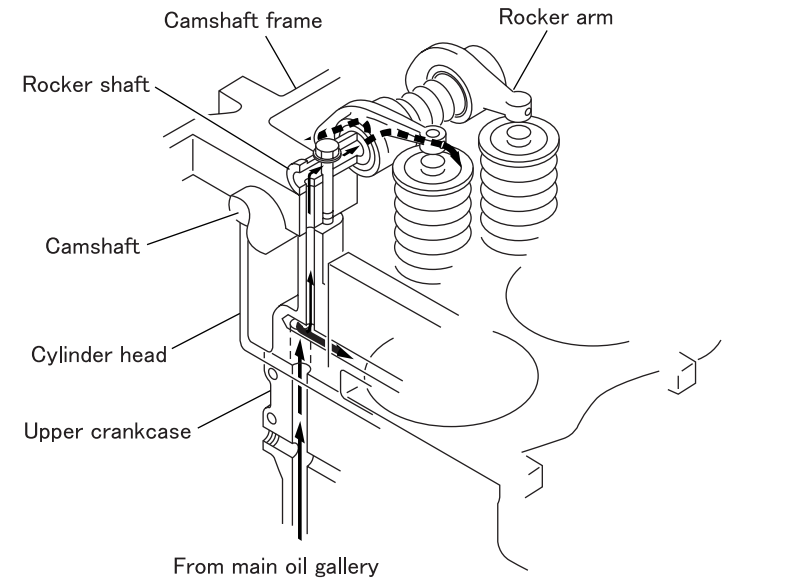

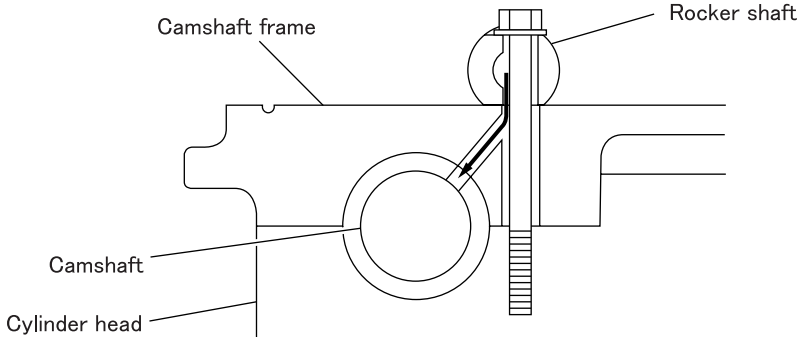

P49003E

- The engine oil flows from the main oil gallery to the rocker shaft through the oil passages in the upper crankcase, cylinder head, and camshaft frame.
- The engine oil in the rocker shaft lubricates the rocker arms and camshaft, then returns to the oil pan.

5.4 Check valves and oil jets

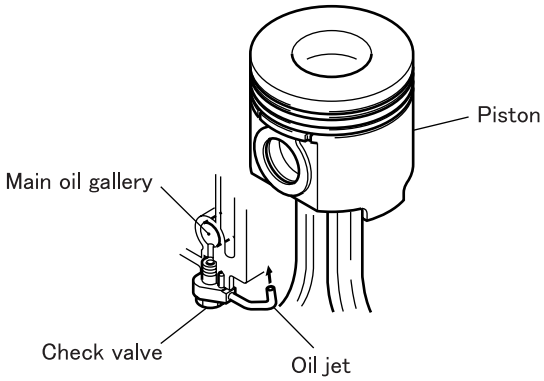

P56457E

- An oil jet is fitted in the lower part of the main oil gallery for each cylinder.
- Engine oil is sprayed out of the oil jet into the piston to cool the piston.
- Each oil jet is fitted with a check valve that opens and closes at predetermined oil pressure levels. At low engine speeds, the check valve closes to maintain the required volume of oil in the lubrication system and prevent reductions in oil pressure.

5.5 Vacuum pump

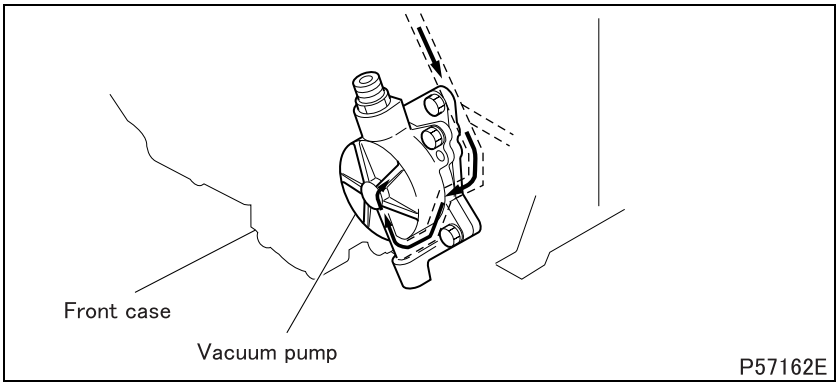

- Engine oil flows through the oil passages in the front case to the vacuum pump.
- The oil in the pump lubricates the vanes, and then is discharged into the front case from the air discharge port of the vacuum pump along with air, and returns to the oil pan.

5.6 Turbocharger

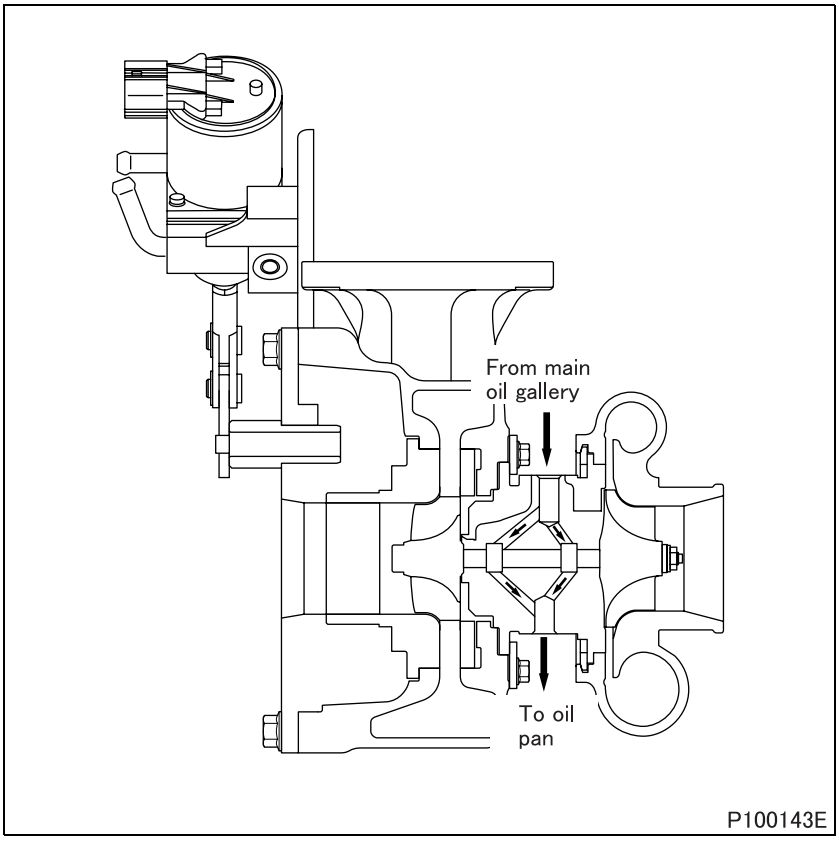

- Engine oil is fed to the bearing housing from the main oil gallery through the oil pipe to lubricate the inside of the turbocharger.
- The piston rings, which are installed on both sides of the turbine wheel shaft, serve as oil seals.

Possible causes \ Symptoms		Engine is difficult to start	Overheating	Low oil pressure	Excessive oil consumption (oil leakage)	Reference Gr
Oil cooler	Incorrectly mounted element		O	O	O	
	Defective gasket		O	O	O	
	Defective O-ring		O	O	O	
	Clogged element		O	O		
	Damaged element		O	O	O	
	Weakened bypass valve spring		O			
Oil pump	Malfunctioning oil pump		O	O		
	Interference between oil pump gear and oil pump case and/or cover	O		O		
Oil filter	Incorrect installation				O	
	Clogged element		O	O		
	Defective gasket			O		
Weakened regulator valve spring				O		
Incorrectly mounted and/or clogged oil strainer			O	O		
Defective fan shaft front oil seal					O	Gr11
Defective crankshaft rear oil seal					O	
Incorrectly mounted front case					O	
Defective piston cooling oil jet(s)			O	O		
Incorrectly mounted gear lubrication oil jet				O		
Oil working its way up into combustion chamber(s) through piston rings					O	
Oil working its way down into combustion chamber(s) through valves					O	
Too high oil viscosity		O				
Poor oil quality			O			
Deterioration of oil			O			
Fuel mixed with oil			O			

M E M O

1. Oil Filter Replacement

<Downward type>

Tightening torque (Unit: N·m {ft.lbs, kgf·m})

Mark	Parts to be tightened	Tightening torque	Remarks
–	Drain plug (oil filter)	9.8 ± 1.96 {7.2 ± 1.4, 1.0 ± 0.2}	–

Lubricant and/or sealant

Mark	Points of application	Specified lubricant and/or sealant	Quantity
–	Oil filter	Engine oil (API classification CJ-4)	Approx. 1 L {1.1 qts}

Special tools

Mark	Tool name and shape	Part No.	Application
a	Oil filter element socket 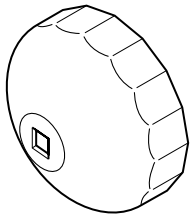 P08550	MH061566	Removal of oil filter

WARNING ⚠

- **Wipe up any spilled engine oil, as it can cause fires.**

CAUTION ⚠

- **Make sure not to put any engine oil on the belt when working on the oil filter. Belts soiled with oil or grease may easily slip, resulting in deteriorated performance of the cooling system.**

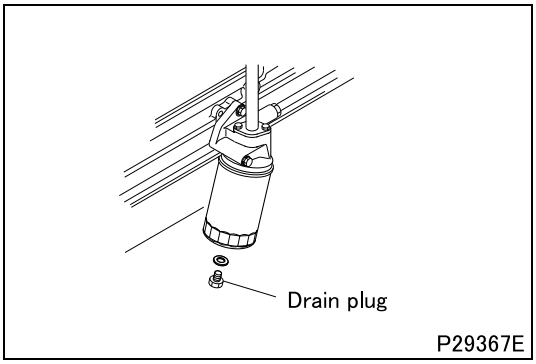

P29367E

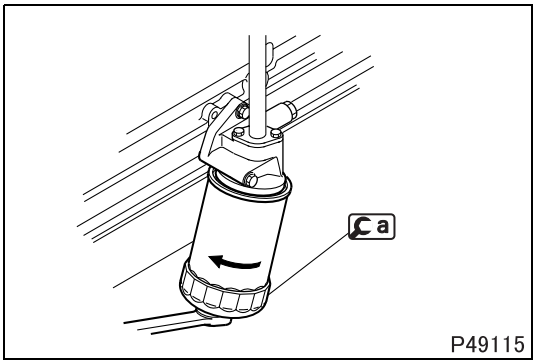

P49115

[Removal]

- Remove the drain plug and drain the oil out of the oil filter.

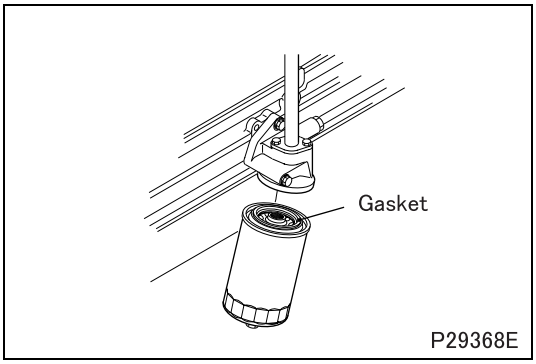

[Installation]

- Clean the oil filter mounting surfaces of the oil filter head.
- Apply a thin coat of engine oil on the oil filter gasket.
- Screw in the oil filter by hand until the gasket touches the oil filter head. Then, tighten the filter by turning it further by three quarters (3/4) of a turn.
- After installing the oil filter, start the engine and check that there are no oil leaks.
- Remove and reinstall the oil filter if it is leaky.
- Stop the engine and check the engine oil level.
- Add engine oil if necessary.

<Upward type>

Tightening torque (Unit: N·m {ft.lbs, kgf·m})

Mark	Parts to be tightened	Tightening torque	Remarks
–	Drain plug (oil pipe)	34.3 to 39.2 {25 to 29, 3.5 to 3.9}	–

Lubricant and/or sealant

Mark	Points of application	Specified lubricant and/or sealant	Quantity
–	Oil filter	Engine oil (API classification CJ-4)	Approx. 1 L {1.1 qts}

Special tools

Mark	Tool name and shape	Part No.	Application
a	Oil filter wrench 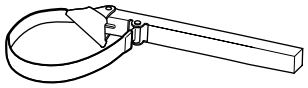 P105191	MH063855	Removal of oil filter

WARNING ⚠

- **Wipe up any spilled engine oil, as it can cause fires.**

CAUTION ⚠

- **Make sure not to put any engine oil on the belt when working on the oil filter. Belts soiled with oil or grease may easily slip, resulting in deteriorated performance of the cooling system.**

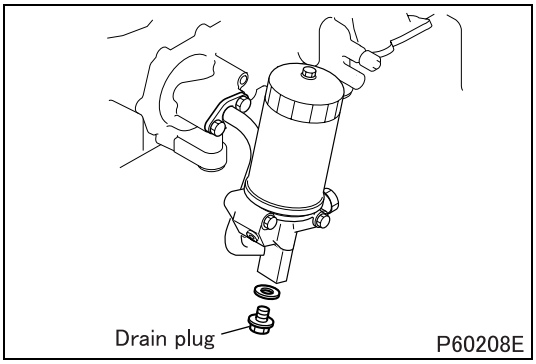

[Removal]

- Remove the drain plug and drain the oil out of the oil filter.

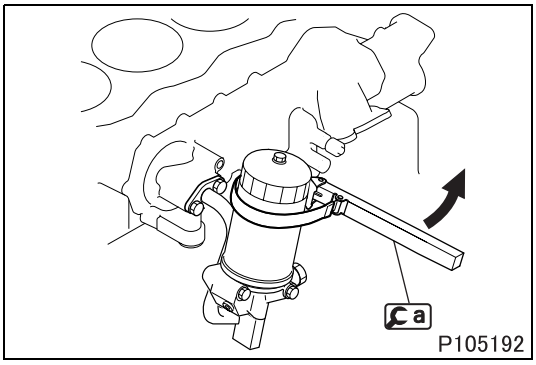

NOTE

- **When the oil filter is removed, a small amount of engine oil may spill out. Before proceeding to the removal procedure, keep a piece of waste cloth ready for catching any spilled oil.**

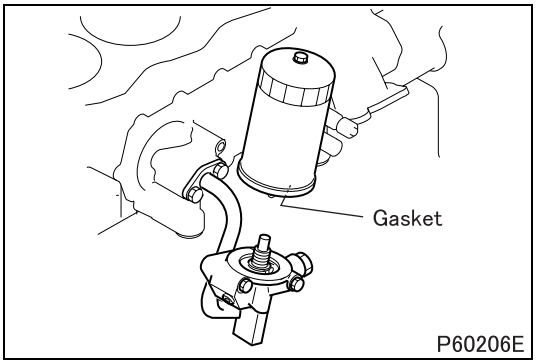

[Installation]

- Clean the oil filter mounting surfaces of the oil filter head.
- Apply a thin coat of engine oil on the oil filter gasket.
- Screw in the oil filter by hand until the gasket touches the oil filter head. Then, tighten the filter by turning it further by three quarters (3/4) of a turn.
- After installing the oil filter, start the engine and check that there are no oil leaks.
- Remove and reinstall the oil filter if it is leaky.
- Stop the engine and check the engine oil level.
- Add engine oil if necessary.

2. Engine Oil Replacement

<Downward type>

Tightening torque (Unit: N·m {ft.lbs, kgf·m})

Mark	Parts to be tightened	Tightening torque	Remarks
–	Drain plug (oil filter)	9.8 ± 1.96 {7.2 ± 1.4, 1.0 ± 0.2}	–
–	Drain plug (oil pan)	34.3 to 43.1 {25 to 32, 3.5 to 4.4}	–

Lubricant and/or sealant

Mark	Points of application	Specified lubricant and/or sealant	Quantity
–	Oil filter	Engine oil (API classification CJ-4)	Approx. 1 L {1.1 qts}
	Oil pan		Approx. 7 L {7.4 qts}

WARNING ⚠

- **Wipe up any spilled engine oil, as it can cause fires.**

CAUTION ⚠

- **Make sure not to put any engine oil on the belt during engine oil replacement. Belts soiled with oil or grease may easily slip, resulting in deteriorated performance of the cooling system.**

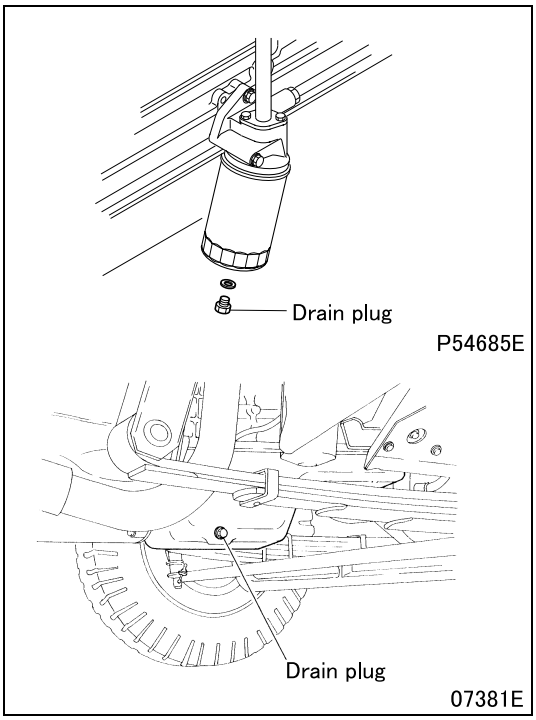

[Draining]

- Remove the filler cap.
- Remove the drain plugs of the oil filter and oil pan to drain out the engine oil.

[Refilling]

- Tighten the drain plug to the specified torque, then pour a specified amount of new engine oil into the engine.
- Stop the engine and check the engine oil level.
- Add engine oil if necessary.

<Upward type>

Tightening torque (Unit: N·m {ft.lbs, kgf·m})

Mark	Parts to be tightened	Tightening torque	Remarks
–	Drain plug (oil pipe)	34.3 to 39.2 {25 to 29, 3.5 to 3.9}	–
–	Drain plug (oil pan)	34.3 to 43.1 {25 to 32, 3.5 to 4.4}	–

Lubricant and/or sealant

Mark	Points of application	Specified lubricant and/or sealant	Quantity
–	Oil filter	Engine oil (API classification CJ-4)	Approx. 1 L {1.1 qts}
	Oil pan		Approx. 9 L {9.5 qts}

WARNING ⚠

- **Wipe up any spilled engine oil, as it can cause fires.**

CAUTION ⚠

- **Make sure not to put any engine oil on the belt during engine oil replacement. Belts soiled with oil or grease may easily slip, resulting in deteriorated performance of the cooling system.**

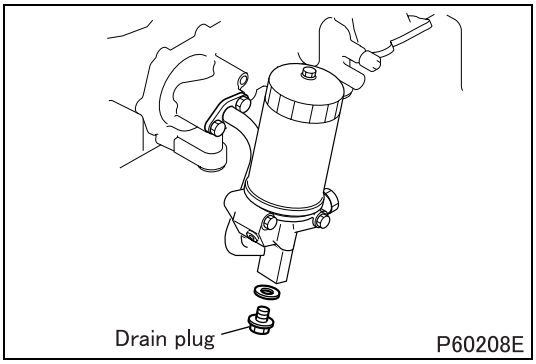

[Draining]

- Remove the filler cap.
- Remove the drain plugs of the oil filter and oil pan to drain out the engine oil.

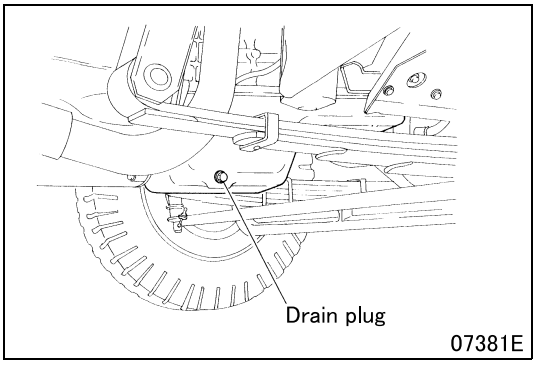

[Refilling]

- Tighten the drain plug to the specified torque, then pour a specified amount of new engine oil into the engine.
- Stop the engine and check the engine oil level.
- Add engine oil if necessary.

3. Engine Oil Level Inspection

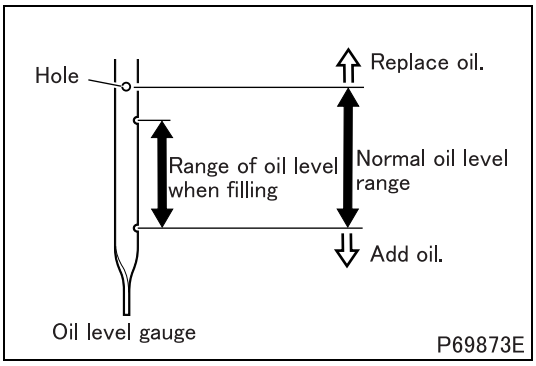

- When regenerating the DPF (diesel particulate filter), a part of the injected fuel may mix into the engine oil and may increase the quantity of oil.
- If the oil level is out of the normal range, add or replace the engine oil.

CAUTION ⚠

- **If the engine oil level exceeds the hole on the oil level gauge, replace the engine oil immediately as the oil has deteriorated and may cause seizure.**

- If remarkable increase of the engine oil is observed, check the following even the oil level is within the normal range.
  - Seizure of piston ring and piston
  - Excessive clearance between piston and cylinder liner

4. Oil Pressure Measurement

Service standards

Location	Maintenance item		Standard value	Limit	Remedy
–	Oil pressure (oil temperature at 70 to 90°C {158 to 195°F})	No-load minimum speed	195 kPa {28 psi, 2.0 kgf/cm^2}	98 kPa {14 psi, 1.0 kgf/cm^2}	Inspect
		No-load maximum speed	295 to 490 kPa {43 to 71 psi, 3 to 5 kgf/cm^2}	195 kPa {28 psi, 2.0 kgf/cm^2}	

Tightening torque (Unit: N·m {ft.lbs, kgf·m})

Mark	Parts to be tightened	Tightening torque	Remarks
–	Engine oil pressure switch	7.8 to 14.7 {5.8 to 11, 0.8 to 1.5}	Sealant With cold engine

Lubricant and/or sealant

Mark	Points of application	Specified lubricant and/or sealant	Quantity
–	Engine oil pressure switch threads	ThreeBond 1215	As required

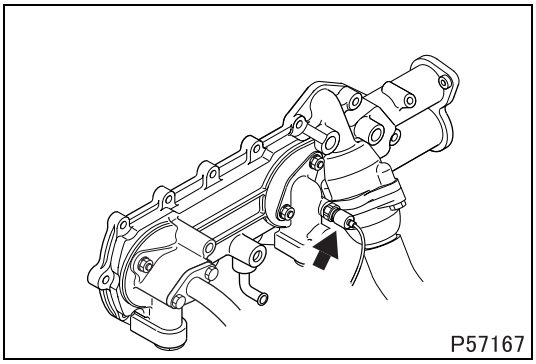
P57167

- Remove the engine oil pressure switch.

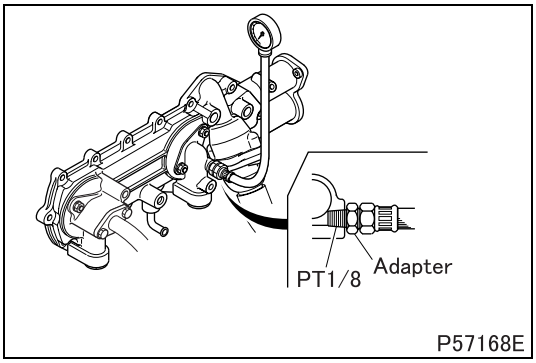

P57168E

- Using an adapter, connect an oil pressure gauge to the engine oil pressure switch mounting hole.
- Warm up the engine until the oil temperature reaches 70 to 90°C {158 to 195°F}.
- Measure the oil pressure while running the engine at a minimum speed and then at maximum speed, both under no load.
- If the measurements are below the specified limits, overhaul the lubrication system.
- After taking the measurements, apply sealant to the threads of the oil pressure switch and tighten the switch to the specified torque.

CAUTION ⚠

- **Reinstall the oil pressure switch only when the engine is cold.**

OIL PAN, OIL STRAINER AND OIL JETS

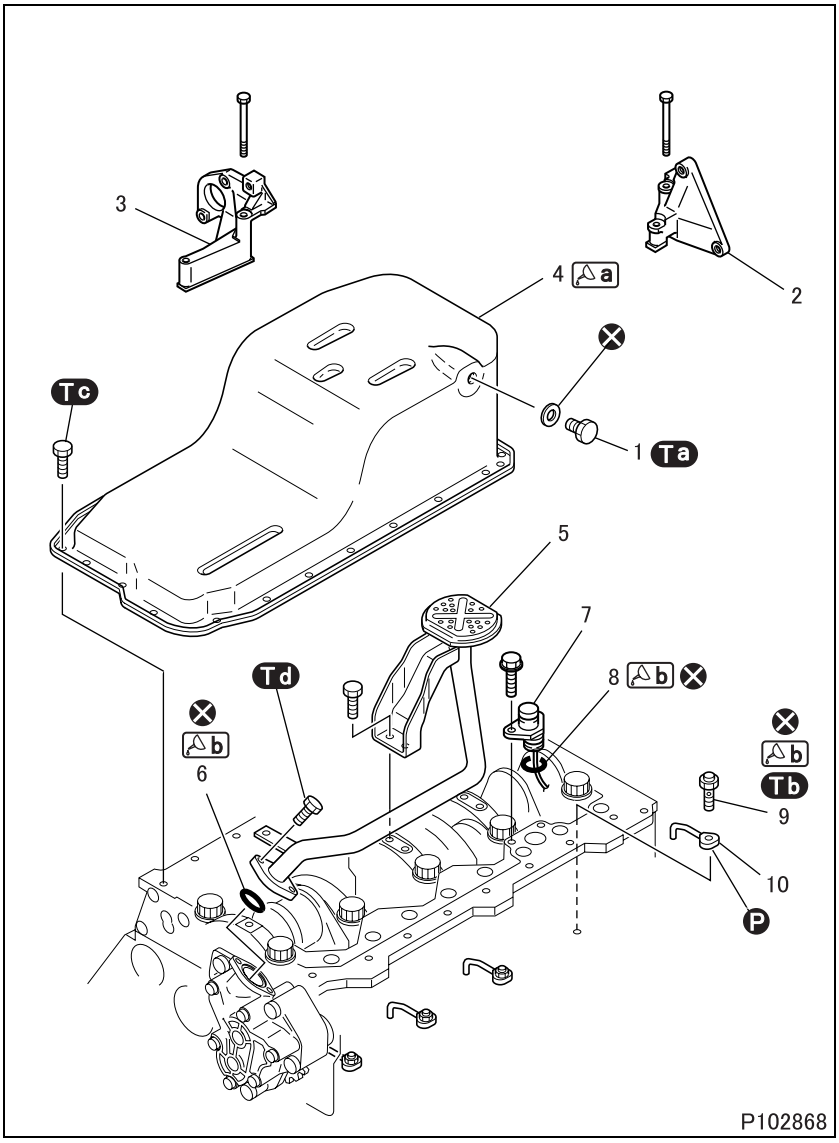

● **Disassembly sequence**

1 Drain plug
2 Stiffner RH
3 Stiffner LH
4 Oil pan
5 Oil strainer
6 O-ring
7 Engine oil level sensor
8 O-ring
9 Check valve
10 Oil jet

Ⓟ: Locating pin
⊗: Non-reusable parts

● **Assembly sequence**

Follow the disassembly sequence in reverse.

CAUTION ⚠

- **Make sure to tighten the check valve only to the specified torque. Overtightening it can cause defective operation, resulting in engine seizure.**

Tightening torque (Unit: N·m {ft.lbs, kgf·m})

Mark	Parts to be tightened	Tightening torque	Remarks
Ta	Drain plug	34.3 to 43.1 {25 to 32, 3.5 to 4.4}	–
Tb	Check valve	29.4 {22, 3.0}	Wet
Tc	Bolt (oil pan mounting)	23.5 {17, 2.4}	–
Td	Bolt (oil strainer mounting)	23.2 {17, 2.4}	–

Lubricant and/or sealant

Mark	Points of application	Specified lubricant and/or sealant	Quantity
a	Crankcase mounting surface of oil pan	ThreeBond 1207C	As required
b	O-ring	Engine oil	As required
	Check valve threads		

◆Installation procedure◆

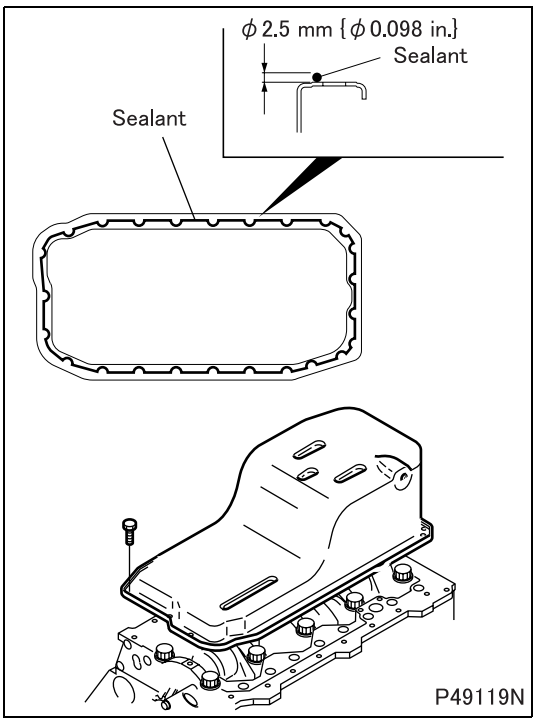

■ **Installation: Oil pan**

- Clean the mating surfaces of each part.
- Apply a bead of sealant to the mating surface of the oil pan evenly and without any breaks as shown in the illustration.
- Mount the oil pan within three minutes of applying the sealant. Make sure that the sealant stays in place.

CAUTION ⚠

- **Do not start the engine less than an hour after installation.**
- **If the oil pan mounting bolts were loosened or removed, be sure to reapply sealant.**

OIL PUMP

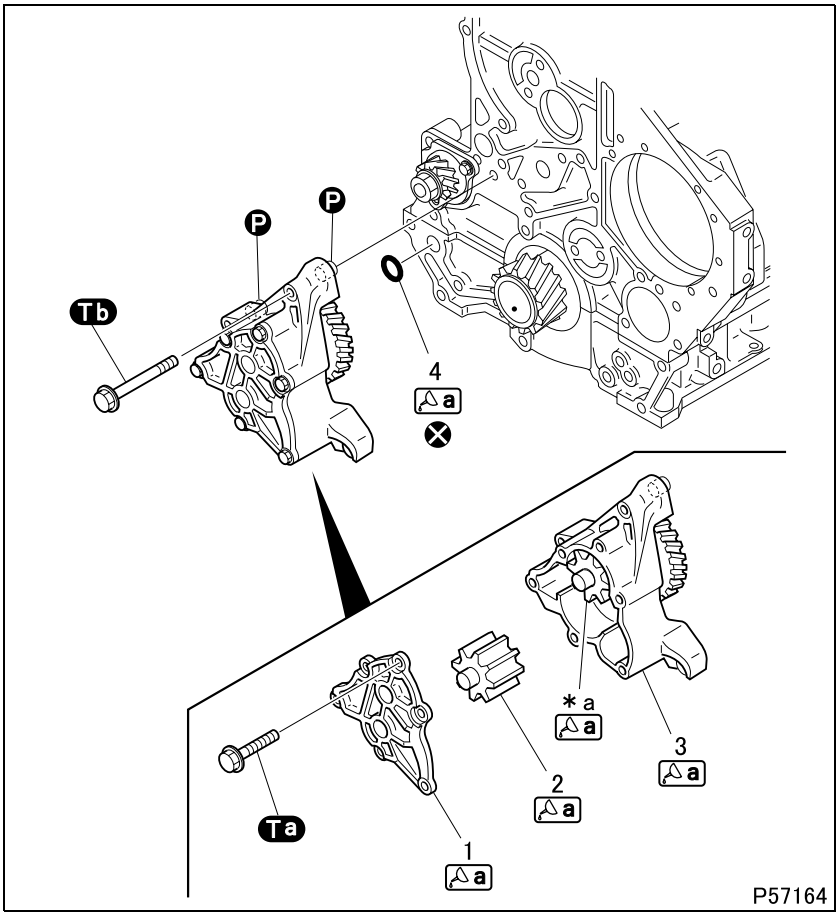

● **Disassembly sequence**

1 Oil pump cover
2 Driven gear
3 Gear and case assembly
4 O-ring

***a**: Drive gear
Ⓟ: Locating pin
⊗: Non-reusable parts

● **Assembly sequence**

Follow the disassembly procedure in reverse.

Service standards (Unit: mm {in.})

Location	Maintenance item	Standard value	Limit	Remedy
1, 2	Oil pump cover-to-driven gear shaft clearance	0.04 to 0.075 {0.0016 to 0.0030}	0.15 {0.0059}	Replace
1, *a	Oil pump cover-to-drive gear shaft clearance	0.04 to 0.075 {0.0016 to 0.0030}	0.15 {0.0059}	Replace
2, 3	Gear and case assembly-to-driven gear shaft clearance	0.04 to 0.075 {0.0016 to 0.0030}	0.15 {0.0059}	Replace
2, 3, *a	Sinkage of each gear from gear and case assembly end surface	0.05 to 0.11 {0.0020 to 0.0043}	0.15 {0.0059}	Replace
	Gear and case assembly-to-tooth tip clearance for each gear	0.13 to 0.22 {0.0051 to 0.0087}	0.23 {0.0091}	Replace

Tightening torque (Unit: N·m {ft.lbs, kgf·m})

Mark	Parts to be tightened	Tightening torque	Remarks
Ta	Bolt (oil pump cover mounting)	27.4 {20, 2.8}	–
Tb	Bolt (oil pump mounting)	28 {21, 2.9}	–

Lubricant and/or sealant

Mark	Points of application	Specified lubricant and/or sealant	Quantity
a	Oil pump contact surfaces	Engine oil	As required
	O-ring		

Special tools (Unit: mm {in.})

Mark	Tool name and shape	Part No.	Application
Ca	Pump cover pin A: $\phi 7\ ^{0}_{-0.14}$ {$\phi 0.28\ ^{0}_{-0.0055}$} B: 20 {0.79} 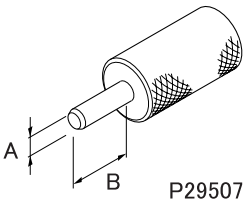 P29507	MH063431	Installation of oil pump cover

◆Inspection procedure◆

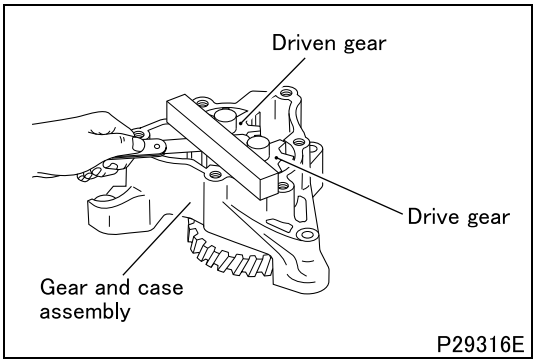

P29316E

■ **Inspection: Driven gear, drive gear and gear and case assembly**

- Carry out the following inspection. Replace the oil pump if any defects are found.

(1) Sinkage of each gear from gear and case assembly end surface

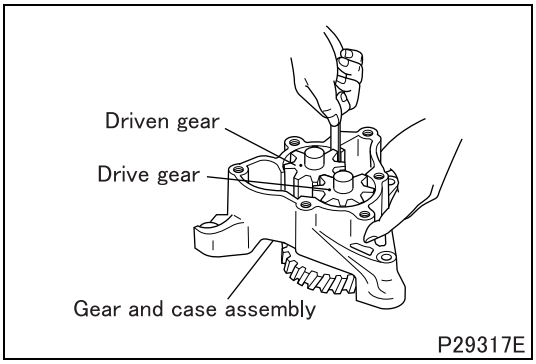

P29317E

(2) Gear and case assembly-to-tooth tip clearance for each gear

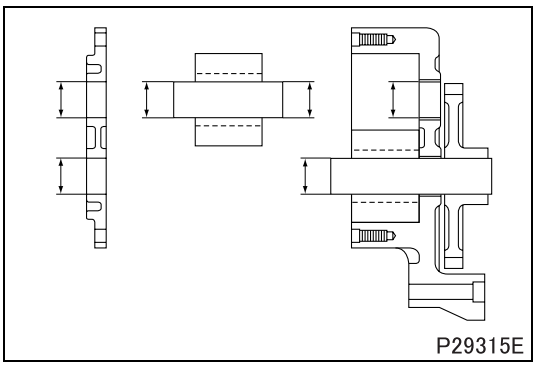
P29315E

■ **Inspection: Oil pump cover, driven gear, and gear and case assembly**

- Measure the clearance between each gear's shaft and the oil pump cover, as well as between each gear's shaft and the gear and case assembly.
- If the measurements are not within the standard value range, replace the oil pump.

◆Installation procedure◆

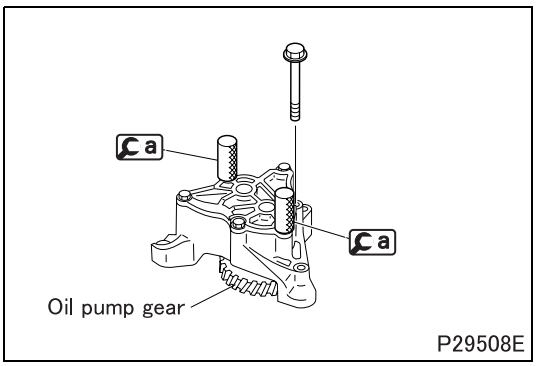

■ **Installation: Oil pump cover and gear and case assembly**

- Apply engine oil to each component.
- Hold the oil pump cover in place on the gear and case assembly by fitting two a s in the illustrated locations.
- Install a bolt into an empty bolt hole and tighten it to the specified torque.
- Remove the two a s. Install the rest of the bolts and tighten them to the specified torque.
- After installing all the bolts, turn the oil pump gear by hand and check that it rotates smoothly.
- Disassemble and reassemble the oil pump cover and gear and case assembly if the oil pump gear does not rotate smoothly.

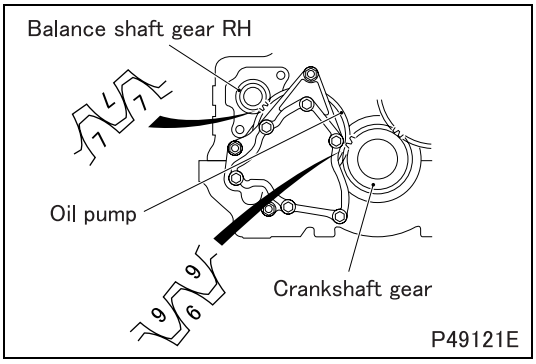

■ **Installation: Oil pump**

- Place the No.1 cylinder piston at top dead center to bring the crankshaft gear to an appropriate position.
- Inject approximately 5 cm^3 {0.3 cu. in.} of engine oil.
- Align the mating mark "**6**" on the crankshaft gear and the mating mark "**7**" on the balance shaft gear RH with the corresponding mating marks on the oil pump gear, and then install the oil pump gear.

M E M O

OIL FILTER

<Downward type>

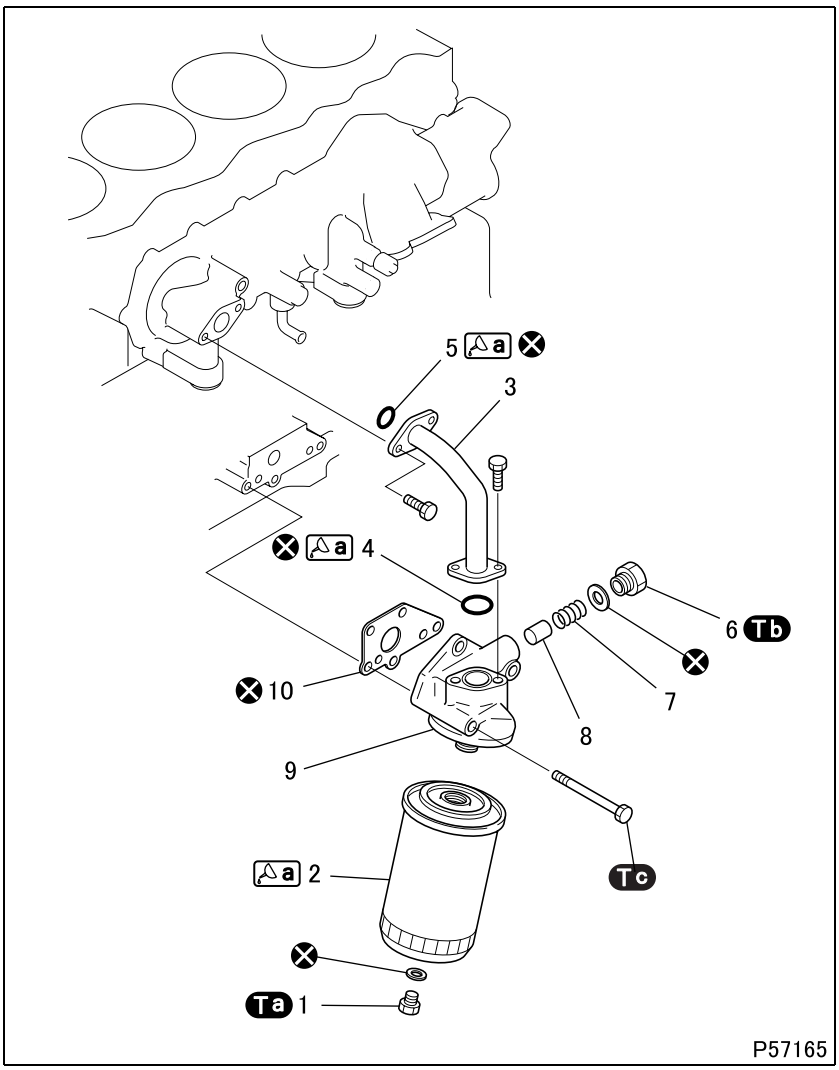

● **Disassembly sequence**

1 Drain plug
2 Oil filter
3 Oil pipe
4 O-ring
5 O-ring
6 Plug
7 Regulator valve spring
8 Regulator valve
9 Oil filter head
10 Gasket

⊗: Non-reusable parts

● **Assembly sequence**

Follow the disassembly sequence in reverse.

WARNING ⚠

- **Wipe up any spilled engine oil, as it can cause fires.**

CAUTION ⚠

- **Make sure not to put any engine oil on the belt when working on the oil cooler and oil filter. Belts soiled with oil or grease may easily slip, resulting in deteriorated performance of the cooling system.**
- **Make sure to install the gasket in the correct position so that it does not cover up the oil hole.**

Service standards (Unit: mm {in.})

Location	Maintenance item	Standard value	Limit	Remedy
7	Load of installed regulator valve spring (installed length: $39^{+0.3}_{0}$ {$1.54^{+0.012}_{0}$})	93.5 ± 0.5 N {21 ± 0.1 lbs, 9.5 ± 0.05 kgf}	–	Replace

Tightening torque (Unit: N·m {ft.lbs, kgf·m})

Mark	Parts to be tightened	Tightening torque	Remarks
Ta	Drain plug	9.8 ± 1.96 {7.2 ± 1.4, 1.0 ± 0.2}	–
Tb	Plug (regulator valve mounting)	60 {44, 6.0}	–
Tc	Bolt (oil filter head mounting)	46 {34, 4.7}	

Lubricant and/or sealant

Mark	Points of application	Specified lubricant and/or sealant	Quantity
a	Oil filter gasket	Engine oil	As required
	O-ring		

Special tools

Mark	Tool name and shape	Part No.	Application
a	Oil filter element socket 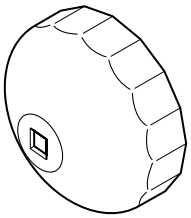 P08550	MH061566	Removal of oil filter

◆Removal procedure◆

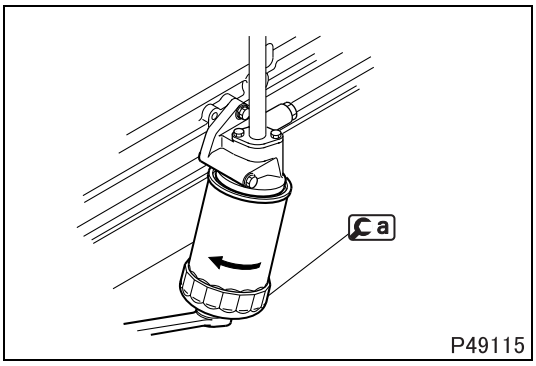

P49115

■ **Removal: Oil filter**

◆Installation procedure◆

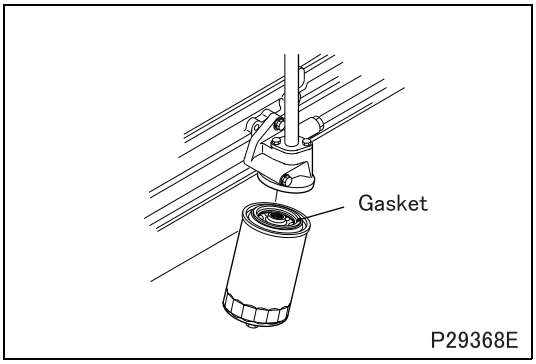

P29368E

■ **Installation: Oil filter**

- Clean the oil filter mounting surface of the oil filter head.
- Apply a thin coat of engine oil on the oil filter gasket.
- Screw in the oil filter by hand until the gasket touches the oil filter head. Then, tighten the filter by turning further by three quarters (3/4) of a turn.
- After installing the oil filter, start the engine and check that there are no oil leaks from the gasket.
- Remove and reinstall the oil filter if it is leaky.
- Stop the engine and check the engine oil level.
- Add engine oil if necessary.

OIL FILTER

<Upward type>

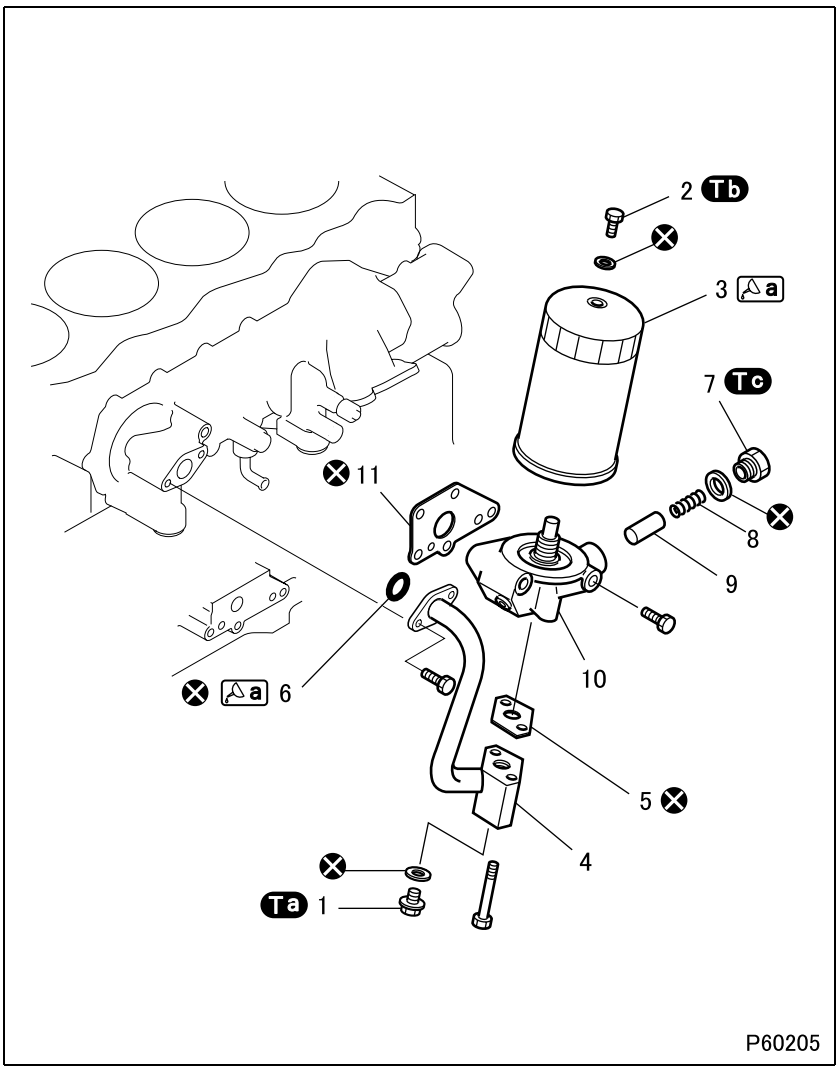

● **Disassembly sequence**

1 Drain plug
2 Drain plug
3 Oil filter
4 Oil pipe
5 Gasket
6 O-ring
7 Plug
8 Regulator valve spring
9 Regulator valve
10 Oil filter head
11 Gasket

⊗: Non-reusable parts

● **Assembly sequence**

Follow the disassembly sequence in reverse.

WARNING ⚠

- **Wipe up any spilled engine oil, as it can cause fires.**

CAUTION ⚠

- **Make sure not to put any engine oil on the V-belt when working on the oil cooler and oil filter. V-belts soiled with oil or grease may easily slip, resulting in deteriorated performance of the cooling system.**
- **Make sure to install the gasket in the correct position so that it does not cover up the oil hole.**

Service standards (Unit: mm {in.})

Location	Maintenance item	Standard value	Limit	Remedy
8	Load of installed regulator valve spring (installed length: $39^{+0.3}_{0}$ {$1.54^{+0.012}_{0}$})	93.5 ± 0.5 N {14 ± 0.1 psi, 9.5 ± 0.05 kgf}	–	Replace

Tightening torque (Unit: N·m {ft.lbs, kgf·m})

Mark	Parts to be tightened	Tightening torque	Remarks
Ta	Drain plug (oil pipe)	34.3 to 39.2 {25 to 29, 3.5 to 3.9}	–
Tb	Drain plug (oil filter)	9.8 ± 1.96 {7.2 ± 1.4, 1.0 ± 0.2}	–
Tc	Plug (regulator plug mounting)	60 {44, 6.0}	–

Lubricant and/or sealant

Mark	Points of application	Specified lubricant and/or sealant	Quantity
a	Oil filter gasket	Engine oil	As required
	O-ring		

Special tools

Mark	Tool name and shape	Part No.	Application
a	Oil filter wrench 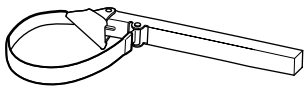 P105191	MH063855	Removal of oil filter

◆Removal procedure◆

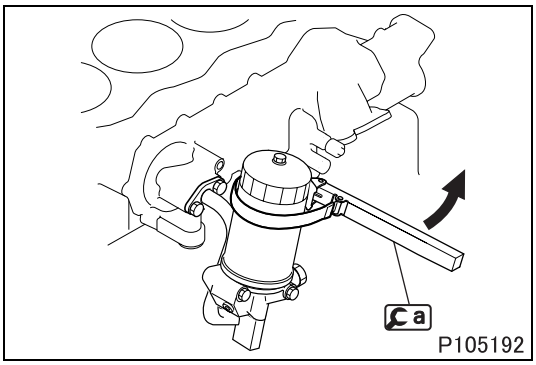

■ **Removal: Oil filter**

◆Installation procedure◆

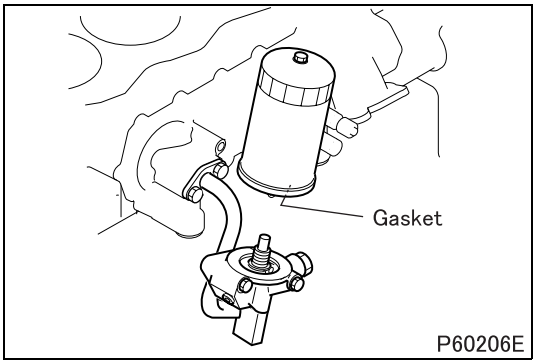

■ **Installation: Oil filter**

- Clean the oil filter mounting surface of the oil filter head.
- Apply a thin coat of engine oil on the oil filter gasket.
- Screw in the oil filter by hand until the gasket touches the oil filter head. Then, tighten the filter by turning further by three quarters (3/4) of a turn.
- After installing the oil filter, start the engine and check that there are no oil leaks from the gasket.
- Remove and reinstall the oil filter if it is leaky.
- Stop the engine and check the engine oil level.
- Add engine oil if necessary.

OIL COOLER

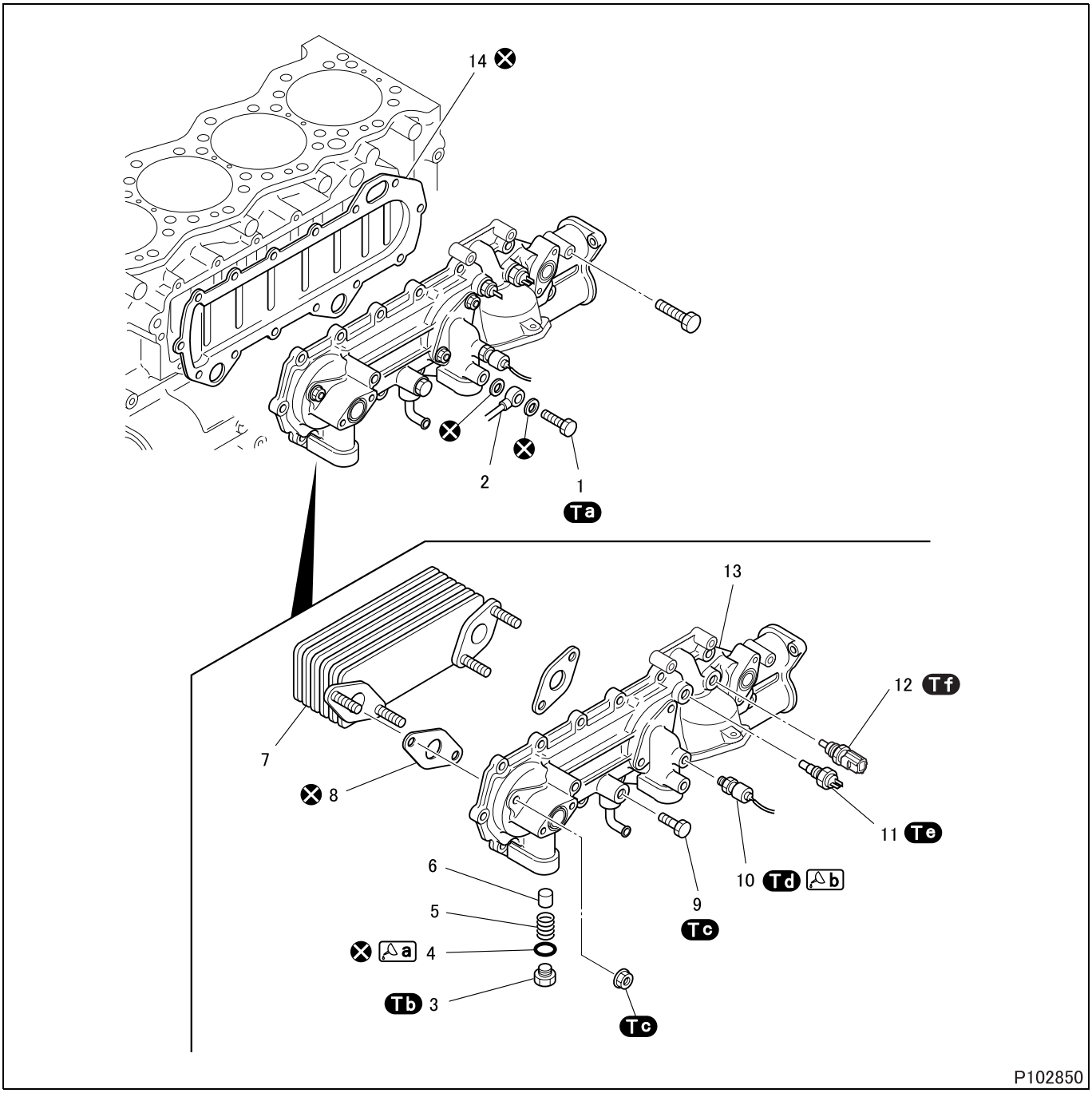

● **Disassembly sequence**

1 Eyebolt
2 Oil pipe
3 Plug
4 O-ring
5 Bypass valve spring
6 Bypass valve
7 Oil cooler element
8 Gasket
9 Water drain valve
10 Engine oil pressure switch
11 Coolant temperature sensor (for water temperature gage and engine control)
12 Coolant temperature sensor (for engine control)
13 Oil cooler body
14 Gasket

⊗: Non-reusable parts

● **Assembly sequence**

Follow the disassembly sequence in reverse.

Service standards (Unit: mm {in.})

Location	Maintenance item	Standard value	Limit	Remedy
5	Load of bypass valve spring (installed length: $48^{0}_{-0.5}$ {$1.89^{0}_{-0.02}$})	95.3 ± 4.9 N {21 ± 1.1 lbs, 9.7 ± 0.5 kgf}	–	Replace
7	Air leakage from oil cooler element (air pressure: 980 kPa {140 psi, 10 kgf/cm^2} for 15 seconds)	0 cm^3 {0 cu. in.}	–	Replace

Tightening torque (Unit: N·m {ft.lbs, kgf·m})

Mark	Parts to be tightened	Tightening torque	Remarks
Ta	Eyebolt (oil pipe mounting)	21 {15, 2.1}	–
Tb	Plug	30 ± 5 {22 ± 3.7, 3.1 ± 0.5}	–
Tc	Nut (oil cooler element mounting)	25 ± 5 {1.8 ± 3.7, 2.5 ± 0.5}	–
	Water drain valve		
Td	Engine oil pressure switch	12 {8.9, 1.2}	Sealant With cold engine
Te	Coolant temperature sensor (for water temperature gage and engine control)	35 {26, 3.6}	–
Tf	Coolant temperature sensor (for engine control)	39 {29, 4}	–

Lubricant and/or sealant

Mark	Points of application	Specified lubricant and/or sealant	Quantity
a	O-ring	Engine oil	As required
b	Engine oil pressure switch threads	ThreeBond 1215	As required

◆Inspection procedure◆

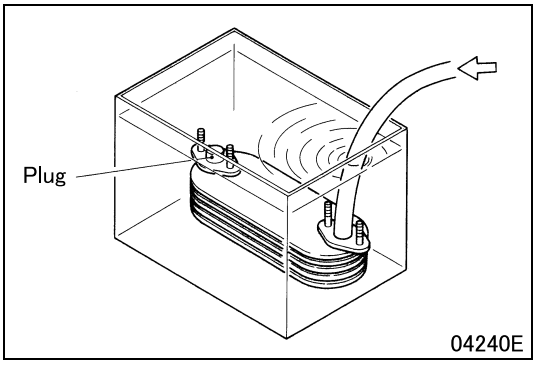

■ Inspection: Oil cooler element

- Plug the outlet of the oil cooler element and connect a hose to the engine oil inlet port. Then, immerse the oil cooler element in a tank of water.
- Apply a specified air pressure for 15 seconds through the hose, and check for any air leaks.
- Replace the element if it leaks air.

Group 13A

Fuel and Engine Control

Table of Contents

Back

Home

MITSUBISHI FUSO TRUCK OF AMERICA, Inc.

Pub.No.TWSE0805-13A

INDEX

SPECIFICATIONS 13A-2

STRUCTURE AND OPERATION
1. Fuel System (Flow of Fuel) 13A-3
2. Engine Control 13A-4
3. Fuel Filter 13A-5

TROUBLESHOOTING 13A-6

ON-VEHICLE INSPECTION AND ADJUSTMENT
1. Inspecting and Adjusting No-load Minimum and Maximum Speeds 13A-8
2. Air-bleeding of Fuel System 13A-9
3. Fuel Filter Replacement 13A-10

FUEL TANK
<OUT SIDE FRAME TYPE> 13A-12
<IN SIDE FRAME TYPE> 13A-14

FUEL FILTER 13A-16

ENGINE CONTROL 13A-20

COMMON RAIL 13A-24

SUPPLY PUMP 13A-28

INJECTOR 13A-32

SPECIFICATIONS

Item			Specifications
Supply pump	Manufacturer		Bosch
	Model		CP3.3 NH
	Control method		Electronic
	Model		Radial, 3-cylinder
	Feed pump type		External gear type
	MPROP(rail pressure control valve)	Rated voltage V	12
	Max. common rail pressure MPa {psi, kgf/cm^2}		180 {26100, 1840}
Common rail	Manufacturer		Bosch
	Common rail volume cm^3 {cu.in., ml}		18.7 {1.14, 18.7}
	Pressure limiting valve opening pressure MPa {psi, kgf/cm^2}		210 to 220 {30450 to 31900, 2140 to 2240}
	Common rail pressure sensor supply voltage V		5
Injectors	Manufacturer		Bosch
	Control method		Electrical
	Max. operating pressure MPa {psi, kgf/cm^2}		180 {26100, 1840}
	Min. operating pressure MPa {psi, kgf/cm^2}		25 {3630, 255}
Common rail electronic control unit	Manufacturer		Bosch
	Rated voltage V		12

1. Fuel System (Flow of Fuel)

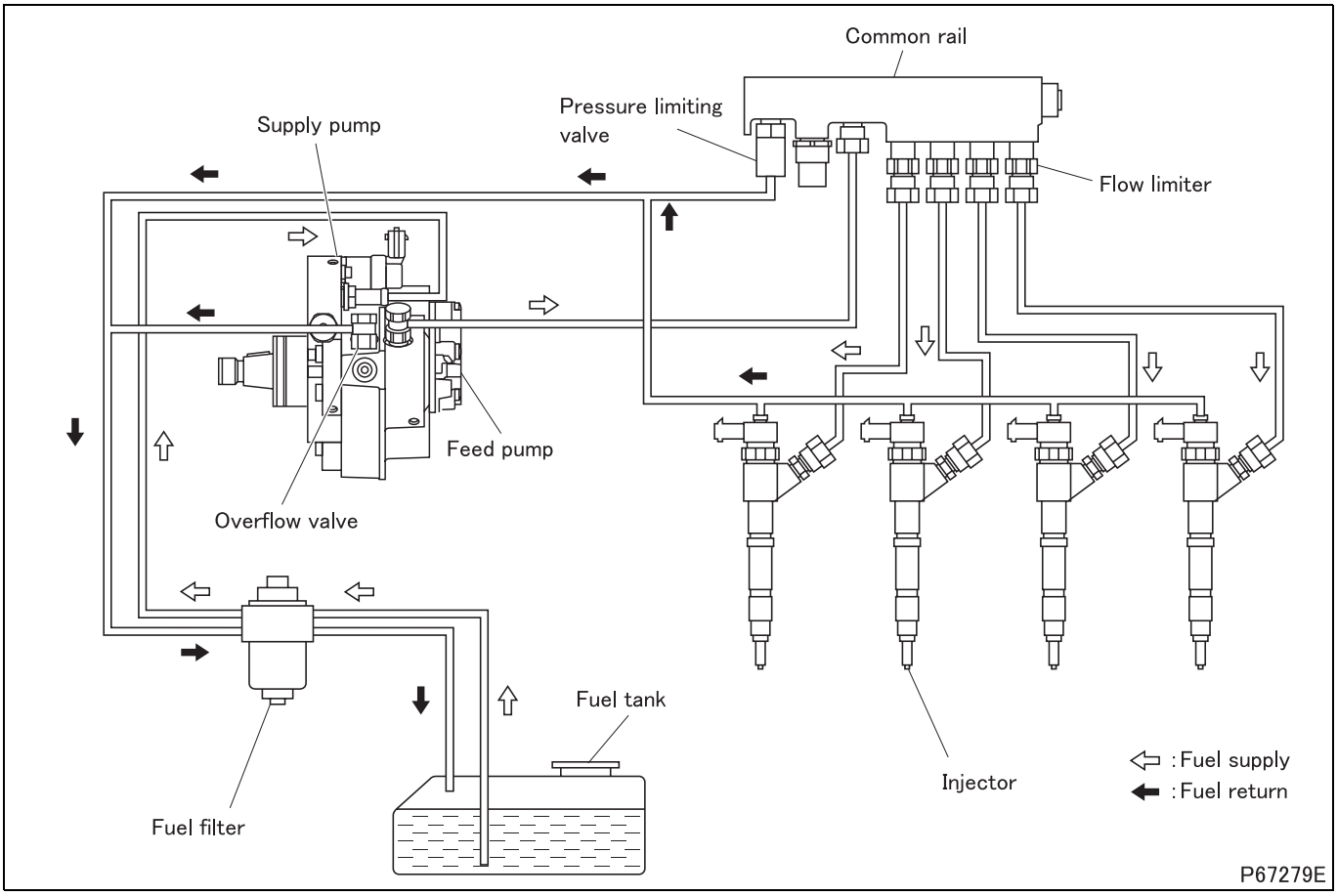

- The feed pump, which is driven by the camshaft inside the supply pump, draws up the fuel from inside the fuel tank and sends it through the fuel filter, where dust and other impurities in the fuel are filtered out.
- The filtered fuel is then sent to the supply pump, where it is compressed. The compressed fuel is accumulated in the common rail for a time, then sprayed out through the injection nozzles into the combustion chamber.
- If fuel leaks from an injection pipe at the pipe joint, the flow limiter is activated to close the fuel passage, preventing the fuel from flowing elsewhere.
- The excess fuel from the injectors returns to the fuel tank through the fuel return hose.
- When the internal fuel pressure of the Common Rail exceeds the limit, the pressure limiting valve opens to allow part of the fuel to return to the fuel tank.
- When the internal fuel pressure of the supply pump exceeds the limit, the overflow valve opens to allow part of the fuel to return to the fuel tank.

2. Engine Control

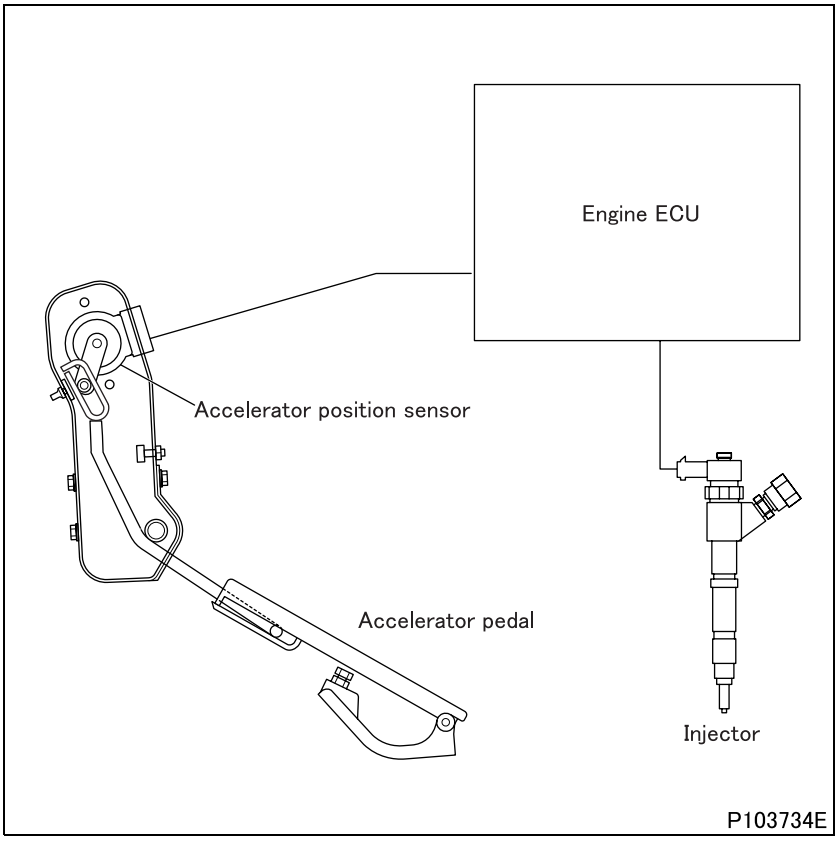

- The engine is electronically controlled by the engine electronic control unit (ECU).
- The accelerator position sensor detects how much the accelerator pedal is pressed and sends the corresponding electronic signal to the engine electronic control unit, which calculates an appropriate amount of fuel based on the signals and controls fuel injection accordingly.

3. Fuel Filter

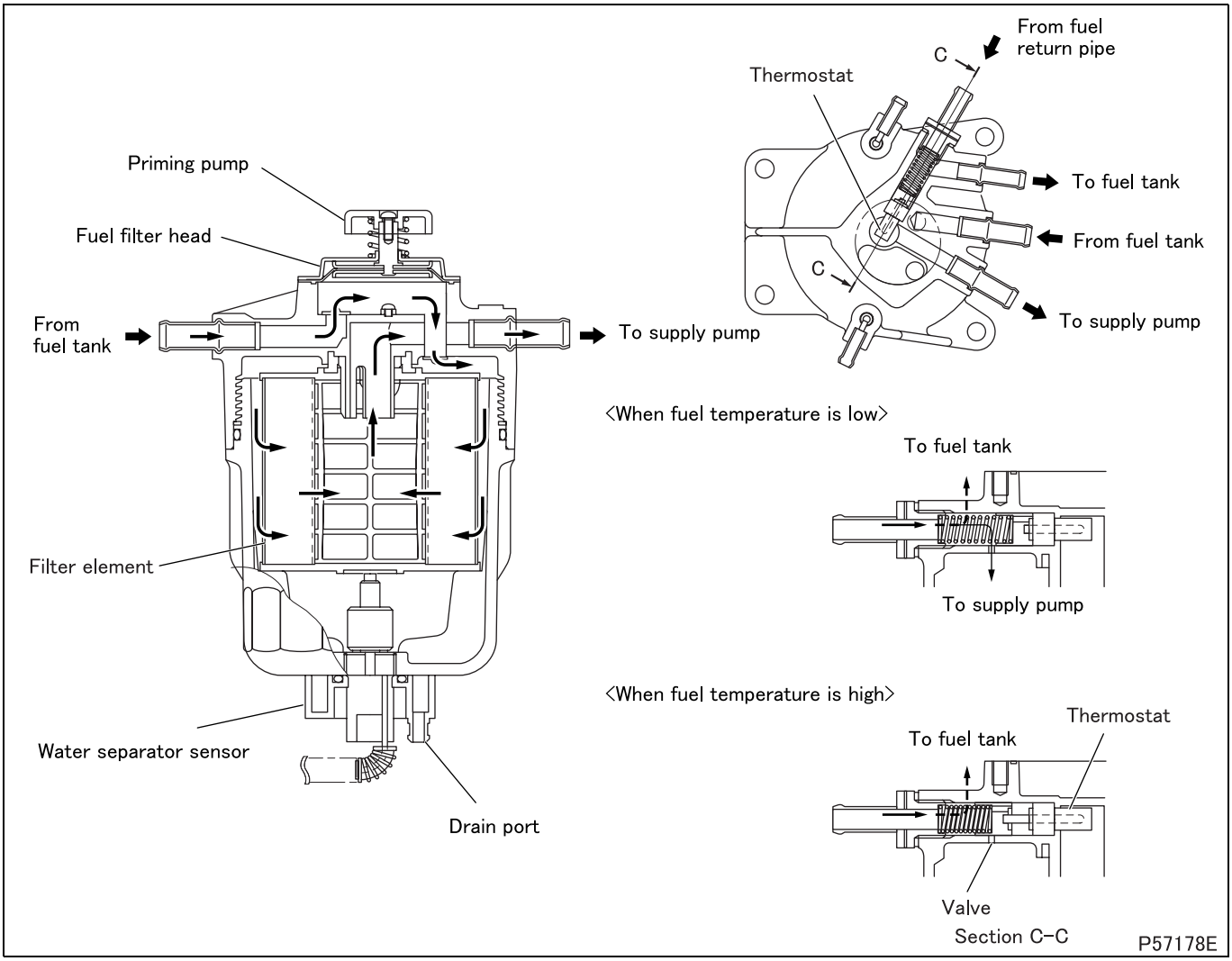

- The fuel filter removes impurities in the fuel through the filter element and also separates water from fuel.
- The water that has been separated from the fuel collects at the bottom of the fuel filter. A water separator sensor is installed in the fuel filter, which activates the warning lamp on the meter cluster when the water reaches a certain level.
- The water can be drained through the drain port by loosening the water separator sensor.
- A priming pump is provided at the fuel filter head. The priming pump is used for air-bleeding the fuel system.
- When the fuel temperature rises, the thermostat swells and the valve of the fuel filter head is closed. The high-temperature fuel entirely returns to the fuel tank through the fuel return pipe.
- When the fuel temperature lowers, the thermostat does not swell and the valve to the fuel filter remains open. The high-temperature fuel returning through the fuel return pipe is let through the valve to mix into the fuel around the element. The fuel around the element is warmed as a result and wax in it (precipitated when the fuel temperature is low) is dissolved to prevent clogging of the element.

Possible causes \ Symptoms		Engine refuses to start	Engine is difficult to start	Engine knocks	Engine output is unstable	Engine output is insufficient	Engine maximum speed is too high	Engine is idling unstably	Engine stops soon after starting	Engine does not reach maximum speed	Engine does not stop	Accelerator pedal is too stiff	Fuel supply is insufficient	Warning lamp illuminates	Reference Gr
Faulty electronic fuel control system														O	Gr13EA
Supply pump	Malfunctioning feed pump check valve		O			O			O		O				*
	Defective feed pump		O			O			O		O				*
	Poorly airtight supply pump overflow valve		O			O			O		O				*
	Open or short circuit failure, poor contact of supply pump magnetic valve		O			O			O		O			O	*
	Defective supply pump magnetic valve, defective supply pump		O			O			O		O				*
Common rail	Open or short circuit failure, poor contact of common rail pressure sensor, defective sensor	O	O		O	O			O					O	*
	Flow limiter activated			O		O								O	*
	Malfunctioning pressure limiting valve			O										O	*
Injectors	Open or short circuit failure, poor contact of injector magnetic valve		O	O		O					O			O	*
	Defective injector, defective injector magnetic valve, defective nozzle		O	O		O					O				*
Clogged fuel filter		O			O			O	O						
No fuel in fuel tank		O													
Clogged fuel pipe and/or leaky pipe joints		O													
Air or water in fuel system		O			O			O	O						
Use of low quality fuel			O	O		O		O							
Fuel leakage from high pressure pipe joint			O	O	O	O					O				*
Engine control	Poorly adjusted accelerator pedal stopper bolt					O				O					
	Defective accelerator pedal position sensor													O	
Cracked fuel pipe and/or hose													O		

*: Contact a Bosch service station for repair.

Symptoms / Possible causes	Engine refuses to start	Engine is difficult to start	Engine knocks	Engine output is unstable	Engine output is insufficient	Engine maximum speed is too high	Engine is idling unstably	Engine stops soon after starting	Engine does not reach maximum speed	Engine does not stop	Accelerator pedal is too stiff	Fuel supply is insufficient	Warning lamp illuminates	Reference Gr
Inappropriate oil viscosity		O					O							Gr12
Poorly adjusted valve clearance		O					O							Gr11
Defective cylinder head gasket		O					O							
Wear of and/or carbon deposits on valve and valve seat		O					O							
Distorted valve springs		O					O							
Worn or damaged piston rings		O					O							
Worn or damaged piston ring groove		O												
Worn piston and/or cylinder liner		O					O							
Poorly functioning cooling system		O					O							Gr14
Defective starter switch	O	O												Gr54
Defective glow plug		O												
Open-circuited, short-circuited or poorly connected engine speed sensor and/or cylinder sensor	O	O											O	Gr13EA
Open-circuited, short-circuited or poorly connected boost pressure sensor			O	O	O				O				O	
Open-circuited, short-circuited or poorly connected coolant temperature sensor	O	O											O	
Poorly connected injection rate adjusting resistor			O		O								O	
Poorly connected idling adjustment control			O				O						O	
Blown fuse	O	O						O					O	Gr54

ON-VEHICLE INSPECTION AND ADJUSTMENT

1. Inspecting and Adjusting No-load Minimum and Maximum Speeds

Service standards

Location	Maintenance item	Standard value	Limit	Remedy
–	No-load minimum speed (idling speed)	650 ± 25 rpm	–	Rectify or replace
–	No-load maximum speed	3100 ± 50 rpm	–	Rectify or replace

[Work before inspection and adjustment]

- Before starting the inspection and adjustment, carry out the following preparatory steps:
- Warm up the engine until the engine coolant temperature is approximately 80 to 95°C {176 to 203°F};
- Turn off all lamps and accessories;
- Put the transmission in neutral (P-range for automatic transmission);
- Set the steering wheel at the straight-ahead position; and
- Attach the probe of the tachometer to an infector.

[Inspection and adjustment]

(1) No-load minimum speed

- Without pressing the accelerator pedal, measure the engine speed.
- If the speed is not within the standard value range, inspect the accelerator position sensor and accelerator switch assembly. (See Gr13EA.)
- If no defects are evident during the above inspection, check for any diagnosis codes related with the fuel system and inspect the supply pump and engine electronic control unit. (See Gr13EA.)

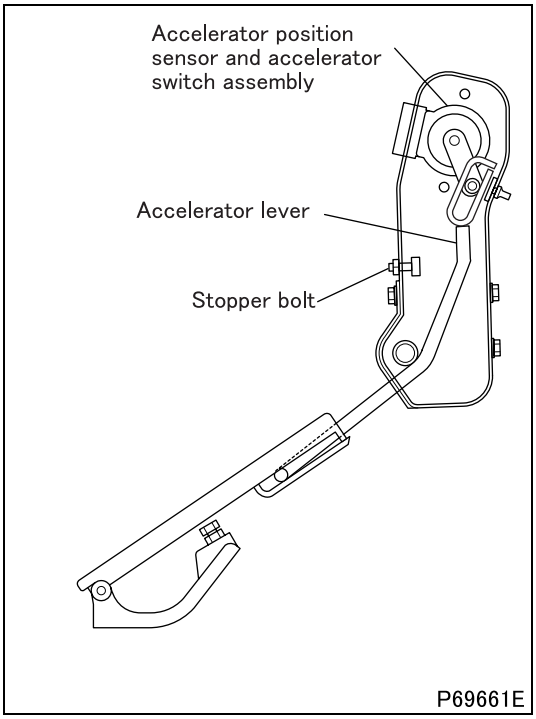

(2) No-load maximum speed

- Press the accelerator pedal as far as it will go.
- With the accelerator lever touching the stopper bolt, measure the engine speed.
- If the speed is not within the standard value range, inspect the accelerator position sensor and accelerator switch assembly. (See Gr13EA.)
- If no defects are evident during the above inspection, check for any diagnosis codes related with the fuel system and inspect the supply pump and engine electronic control unit. (See Gr13EA.)

2. Air-bleeding of Fuel System

Tightening torque (Unit: N·m {ft.lbs, kgf·m})

Mark	Parts to be tightened	Tightening torque	Remarks
–	Plug	10 ± 2 {7.4 ± 1.5, 1 ± 0.2}	–

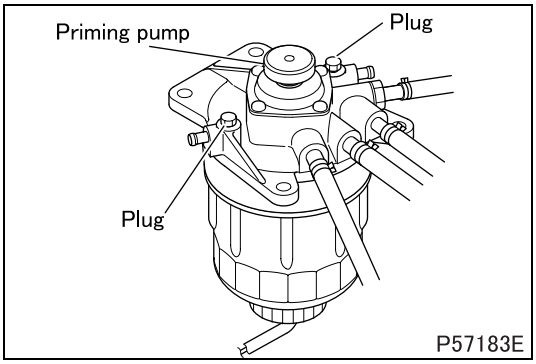

- Loosen one of the plugs on the fuel filter.
- Move the priming pump up and down to pump out the fuel.
- Continue operating the priming pump until the fuel flowing out of the plug is free of air bubbles.
- When no more air bubbles are evident, tighten the plug to the specified torque.
- Feed the fuel some more by operating the priming pump further until a strong resistance is felt.
- When the fuel temperature is low, you may not feel the resistance. Be sure to operate the priming pump several times even in such a case.
- Wipe up any spilled fuel and start the engine.
- Check that there is no fuel leakage.

WARNING ⚠

- **Fuel is highly flammable. Keep it away from flames and sources of heat.**
- **To avoid risk of fire, wipe up any spilled fuel.**

3. Fuel Filter Replacement

Tightening torque (Unit: N·m {ft.lbs, kgf·m})

Mark	Parts to be tightened	Tightening torque	Remarks
–	Water separator sensor	5 ± 1 {3.7 ± 0.7, 0.5 ± 0.1}	–
–	Case	30 ± 2 {22 ± 1.5, 3.1 ± 0.2}	–

Lubricant and/or sealant

Mark	Points of application	Specified lubricant and/or sealant	Quantity
–	O-ring	Engine oil	As required

Special tools

Mark	Tool name and shape	Part No.	Application
ⓐ	Filter wrench 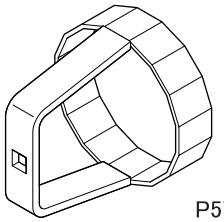 P57179	MH063203	Removal and installation of case

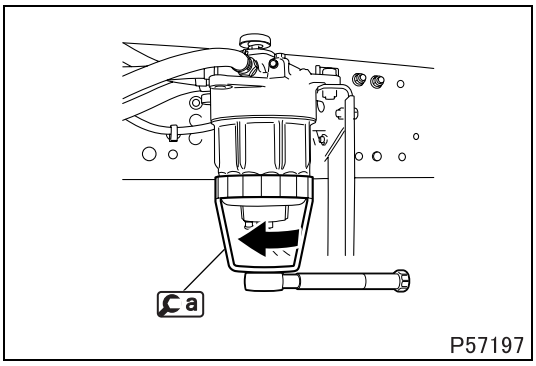

P57197

[Removal]

- Loosen the water separator sensor and drain fuel from the case.
- Remove the case using ⓐ.

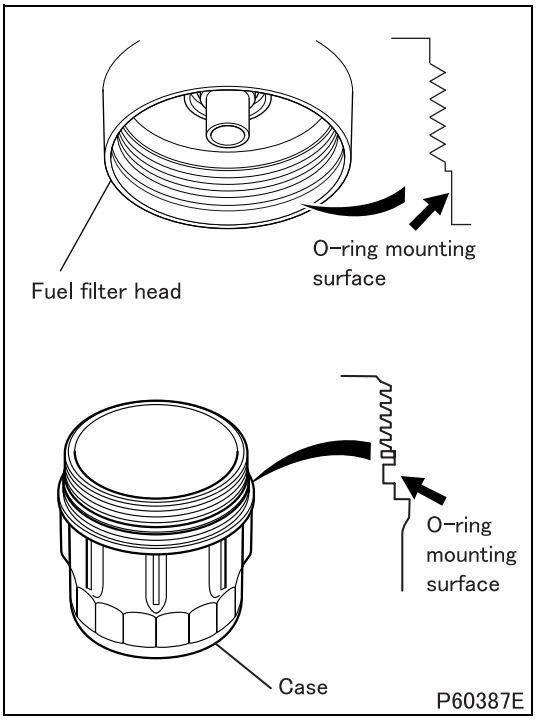

P60387E

[Installation]

- Clean the O-ring mounting surface of the fuel filter head.

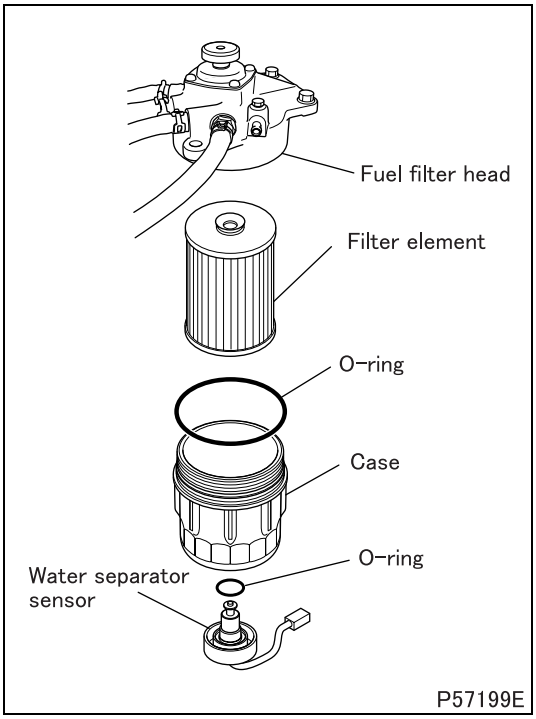

- Replace the filter element and O-ring with new one.
- Apply a thin coat of engine oil to the O-ring, and install it on the case and water separator sensor.

CAUTION ⚠

- **Be sure to use only genuine MITSUBISHI filter elements. The use of non-genuine fuel filters can cause engine failure.**
- **Prevent fine dust particles from entering the fuel filter and fuel pipe, as they can cause problems such as faulty fuel injection.**

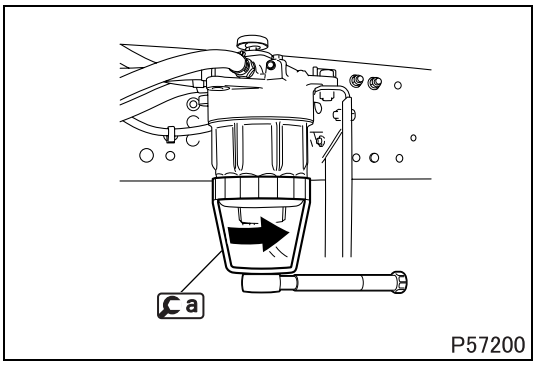

- Use a to tighten the case to the specified torque.
- Install the water separator sensor, and then air-bleed the fuel system.
- Start the engine, and check that there is no fuel leakage.
- Reinstall the fuel filter if there is any leakage.

FUEL TANK <OUT SIDE FRAME TYPE>

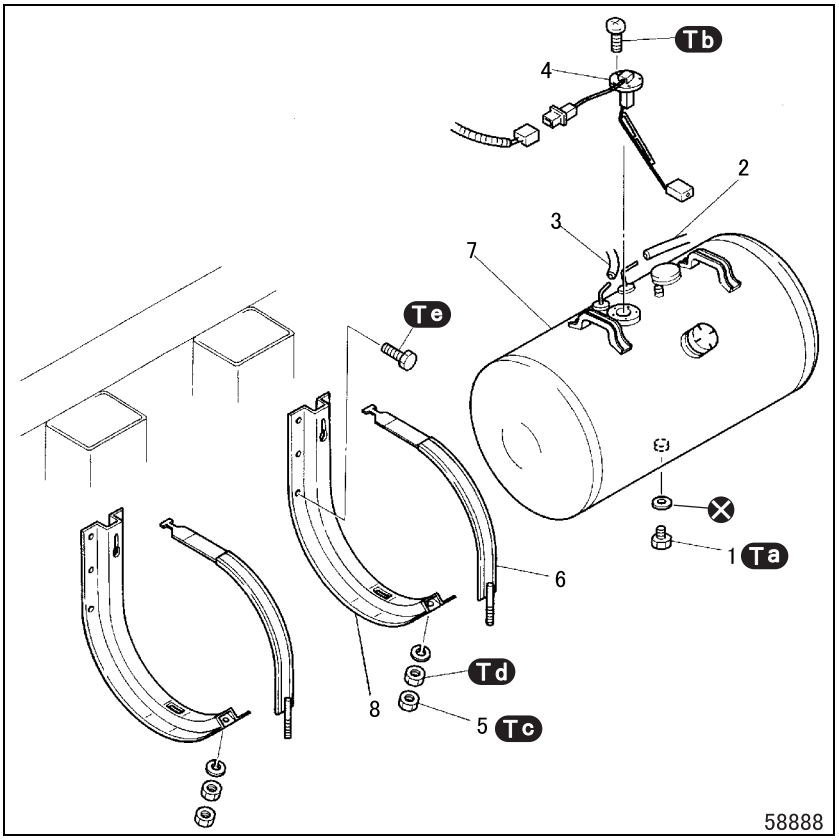

● **Removal sequence**

1 Drain plug
2 Suction hose
3 Return hose
4 Fuel level sensor
5 Lock nut
6 Fuel tank band
7 Fuel tank
8 Fuel tank bracket

⊗: Non-reusable parts

● **Installation sequence**

Follow the removal sequence in reverse.

DANGER ⚠

- **Do not allow any flames or sources of heat near the fuel tank, as it may explode.**

WARNING ⚠

- **Fuel is highly flammable. Keep it away from flames and sources of heat.**
- **To avoid risk of fire, wipe up any spilled fuel.**

Tightening torque (Unit: N·m {ft.lbs, kgf·m})

Mark	Parts to be tightened	Tightening torque	Remarks
Ta	Drain plug	49 to 88.2 {36 to 65, 5.0 to 9.0}	–
Tb	Screw (fuel level sensor mounting)	0.98 to 1.47 {0.7 to 1.1, 0.10 to 0.15}	–
Tc	Lock nut (fuel tank band mounting)	9 to 28 {6.6 to 21, 0.9 to 2.8}	–
Td	Nut (fuel tank band mounting)	6 to 10 {4.4 to 7.4, 0.6 to 1.0}	–
Te	Bolt (fuel tank bracket mounting)	70 to 90 {52 to 66, 7.1 to 9.2}	–

M E M O

FUEL TANK <IN SIDE FRAME TYPE>

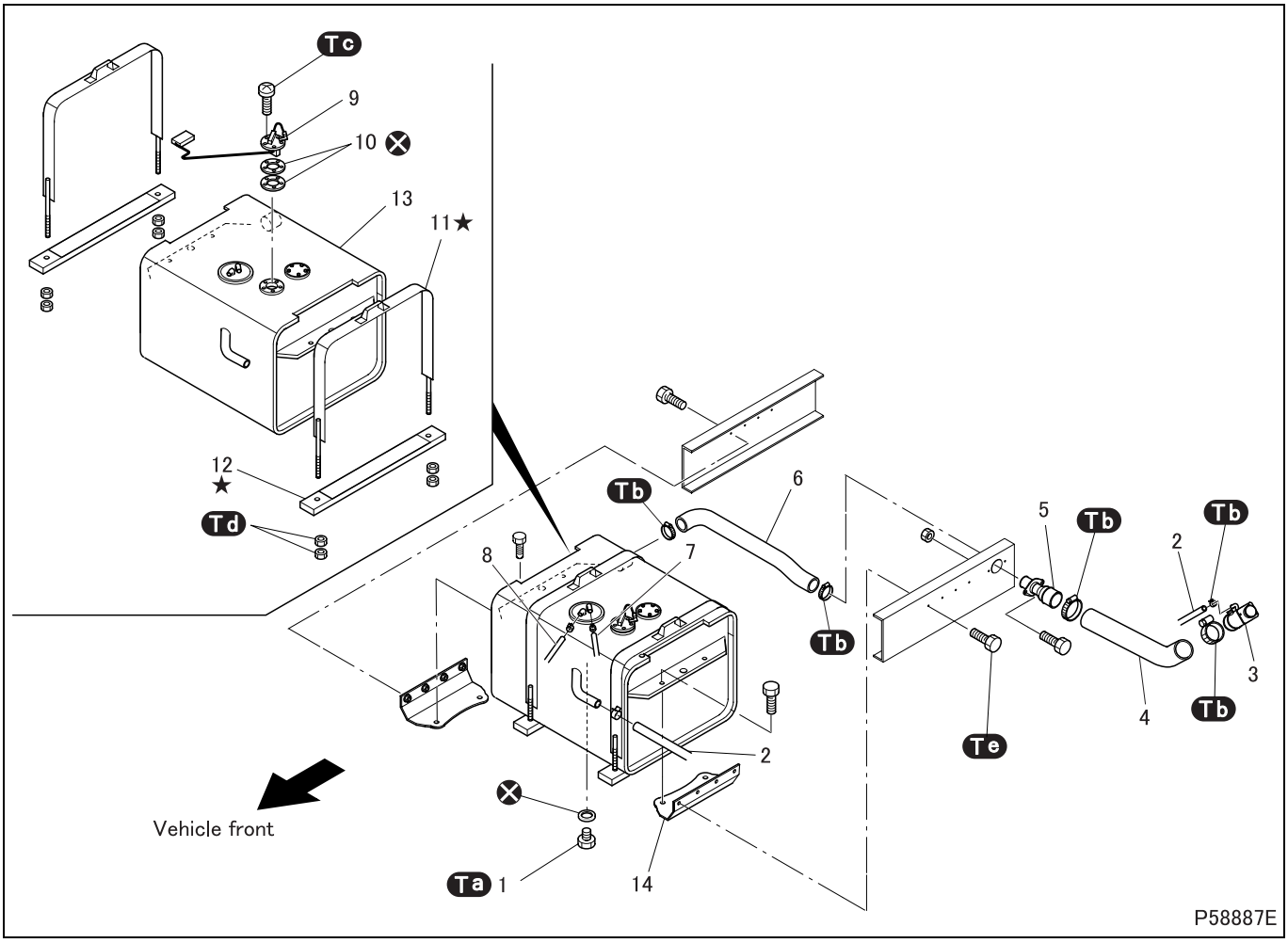

● **Removal sequence**

1 Drain plug
2 Air vent tube
3 End filler
4 Fuel hose
5 Fuel pipe
6 Fuel hose
7 Suction hose
8 Return hose
9 Fuel lever sensor
10 Gasket
★**11** Fuel tank band
★**12** Fuel tank support
13 Fuel tank
14 Fuel tank bracket
⊗: Non-reusable parts

DANGER ⚠

- **Do not allow any flames or sources of heat near the fuel tank, as it may explode.**

WARNING ⚠

- **Fuel is highly flammable. Keep it away from flames and sources of heat.**
- **To avoid risk of fire, wipe up any spilled fuel.**

- The parts indicated with the mark ★ should never be removed, loosened or moved unless they are defective.

● **Installation sequence**

Follow the removal sequence in reverse.

CAUTION ⚠

- **Install the air vent tube without deformation or slack because it causes shrilling fuel refueling.**

Tightening torque (Unit: N·m {ft.lbs, kgf·m})

Mark	Parts to be tightened	Tightening torque	Remarks
Ta	Drain plug	29.4 ± 4.9 {22 ± 3.6, 3.0 ± 0.5)	–
Tb	Clamp	3.9 ± 1.0 {2.9 ± 0.7, 0.4 ± 0.1)	–
Tc	Screw (fuel level sensor mounting)	0.98 to 1.47 {0.7 to 1.1, 0.10 to 0.15}	–
Td	Nut (fuel tank band mounting)	3 to 4 {2.2 to 3.0, 0.3 to 0.4}	–
Te	Bolt (fuel tank bracket mounting)	70 to 90 {52 to 66, 7.1 to 9.2}	–

◆Inspection procedure◆

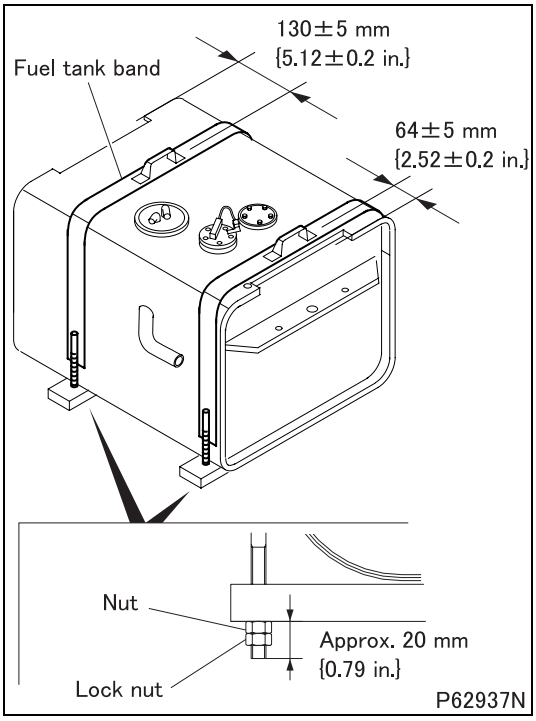

■ Installation: Fuel tank band

- Install the fuel tank band so that the position of the band and the protrusion of the band thread is as illustrated.

CAUTION ⚠

- **Install the fuel tank band so that the band isn't over the protrusion of the fuel tank.**

- Tighten the nuts alternately so that the fuel tank contacts the fuel support in order symmetry and evenly.
- After tightening the nuts to the specified torque, tighten the lock nut the specified torque.

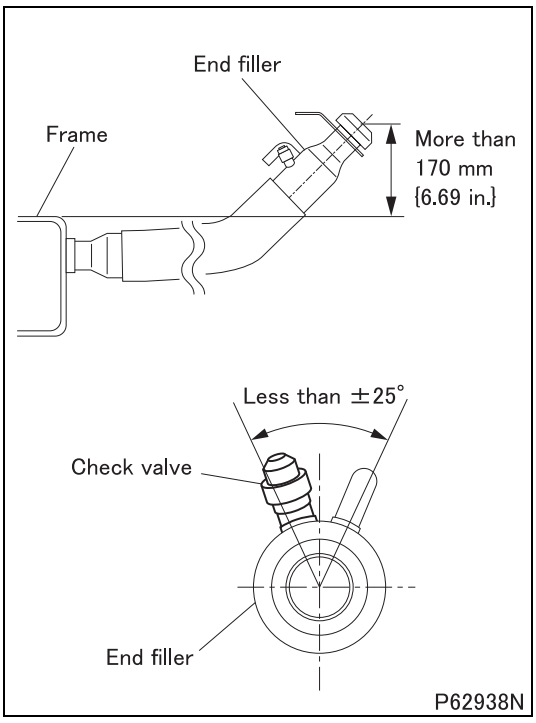

■ Installation: End filler

- Install the end filler so that the installing positions of the end filler mouth and the check valve are as illustrated.

FUEL FILTER

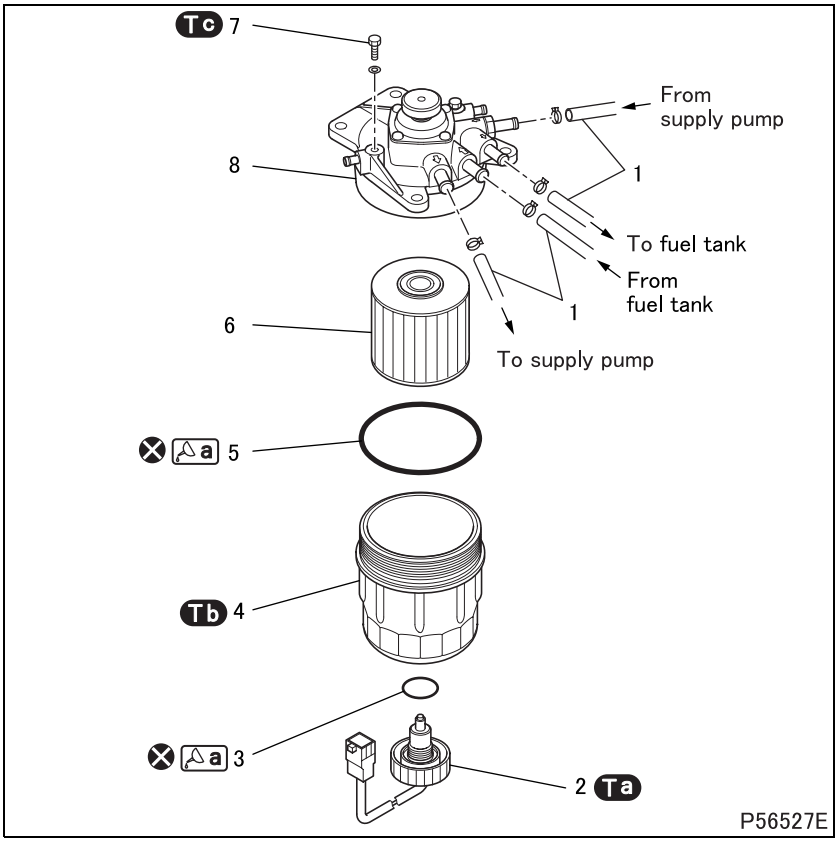

● Disassembly sequence

1 Fuel hose
2 Water separator sensor
3 O-ring
4 Case
5 O-ring
6 Filter element
7 Plug
8 Fuel filter head

⊗: Non-reusable parts

WARNING ⚠

- **Fuel is highly flammable. Keep it away from flames and sources of heat.**
- **Thoroughly wipe up any spilled fuel. Otherwise, it may catch fire.**

● Assembly sequence

Follow the disassembly sequence in reverse.

Tightening torque (Unit: N·m {ft.lbs, kgf·m})

Mark	Parts to be tightened	Tightening torque	Remarks
Ta	Water separator sensor	5 ± 1 {3.7 ± 0.7, 0.5 ± 0.1}	–
Tb	Case	30 ± 2 {22 ± 1.5, 3.1 ± 0.2}	–
Tc	Plug	10 ± 2 {7.4 ± 1.5, 1 ± 0.2}	–

Lubricant and/or sealant

Mark	Points of application	Specified lubricant and/or sealant	Quantity
a	O-ring	Engine oil	As required

Special tools

Mark	Tool name and shape	Part No.	Application
a	Filter wrench 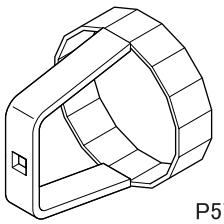 P57179	MH063203	Removal and installation of case

◆Removal procedure◆

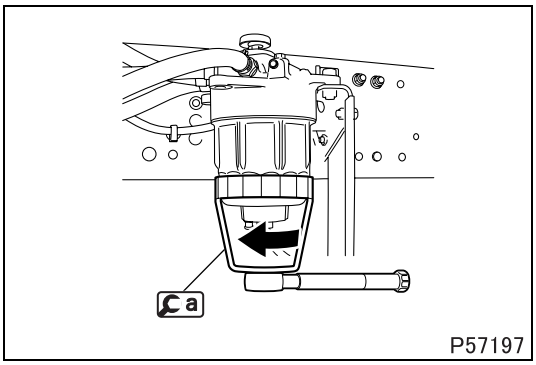

■ **Removal: Case**

- Loosen the water separator sensor and drain fuel from the case.
- Remove the case using a.

CAUTION ⚠

- **Be careful not to damage the case.**

◆Installation procedure◆

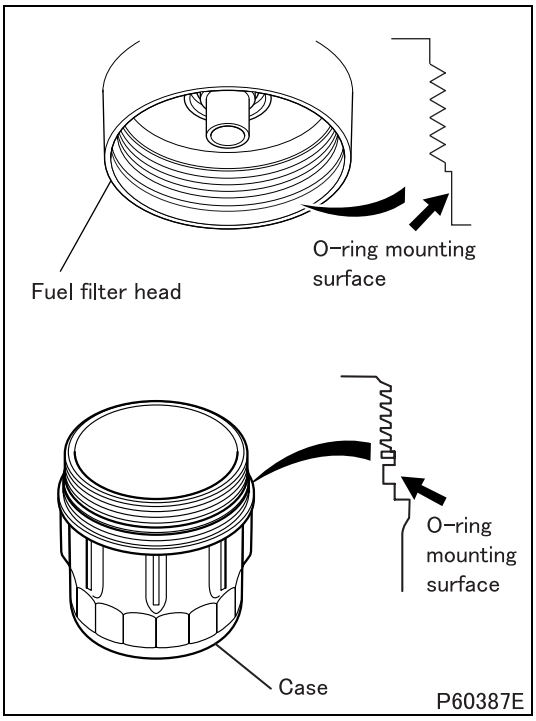

■ **Installation: Case**

- Clean the O-ring mounting surface of the fuel filter head.

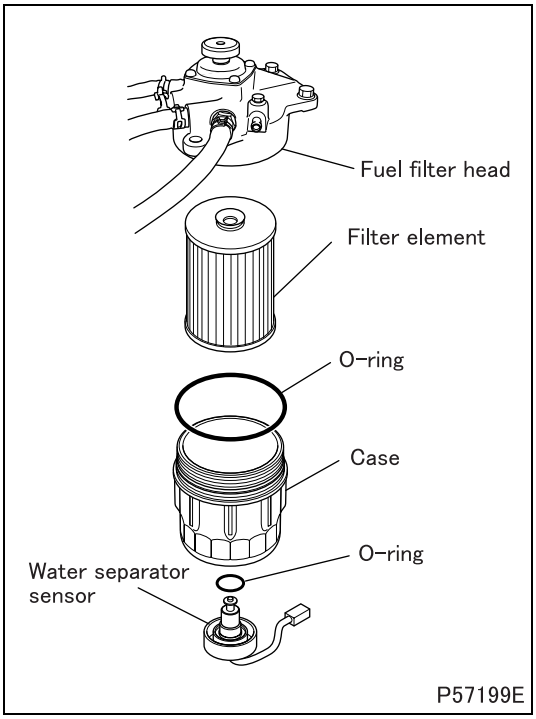

- Replace the filter element and O-ring with new one.
- Apply a thin coat of engine oil to the O-ring, and install it on the case and water separator sensor.

CAUTION ⚠

- **Be sure to use only genuine MITSUBISHI filter elements. The use of non-genuine fuel filters can cause engine failure.**
- **Prevent fine dust particles from entering the fuel filter and fuel pipe, as they can cause problems such as faulty fuel injection.**

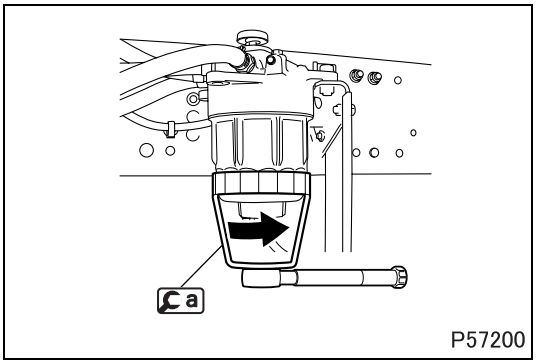

- Use a to tighten the case to the specified torque.
- Install the water separator sensor, and then air-bleed the fuel system.
- Start the engine, and check that there is no fuel leakage.
- Reinstall the fuel filter if there is any leakage.

M E M O

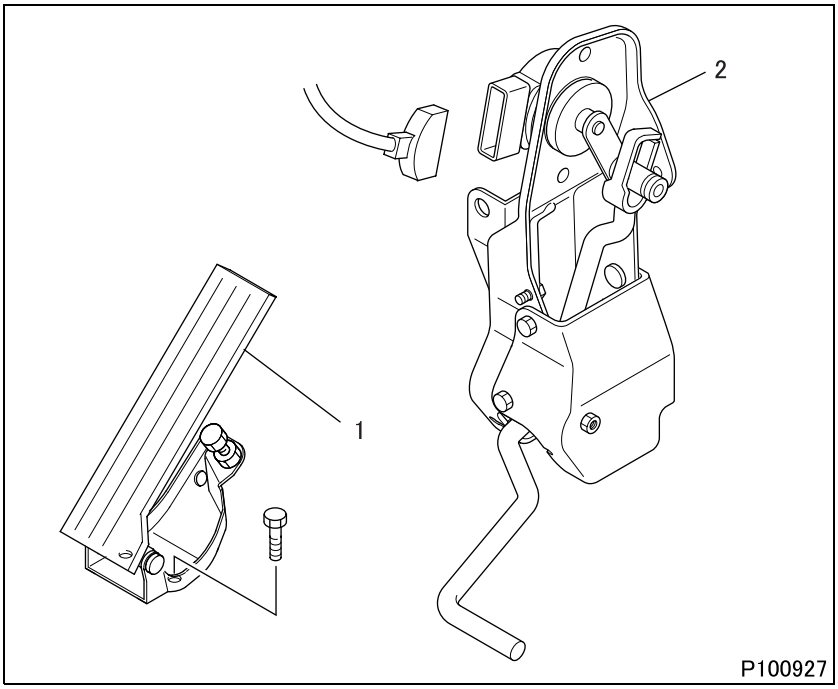

● **Removal sequence**

1. Accelerator pedal (See later sections.)
2. Accelerator link (See later sections.)

● **Installation sequence**

Follow the removal sequence in reverse.

◆**Removal procedure**◆

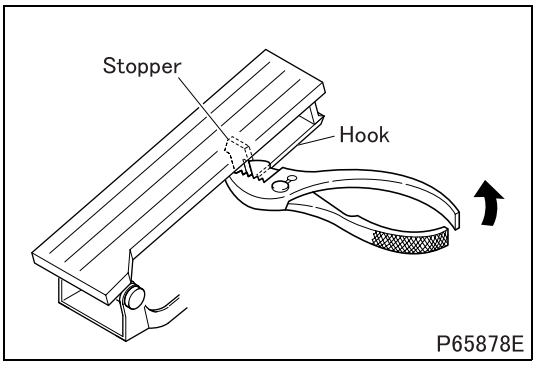

■ **Removal: Accelerator pedal**

- Using pliers, pinch the hook of the stopper on the accelerator pedal. Separate the stopper from the pedal while turning the hook by about 15 degrees.

CAUTION ⚠

- **Do not yank on the stopper, as this may damage it.**

◆**Installation procedure**◆

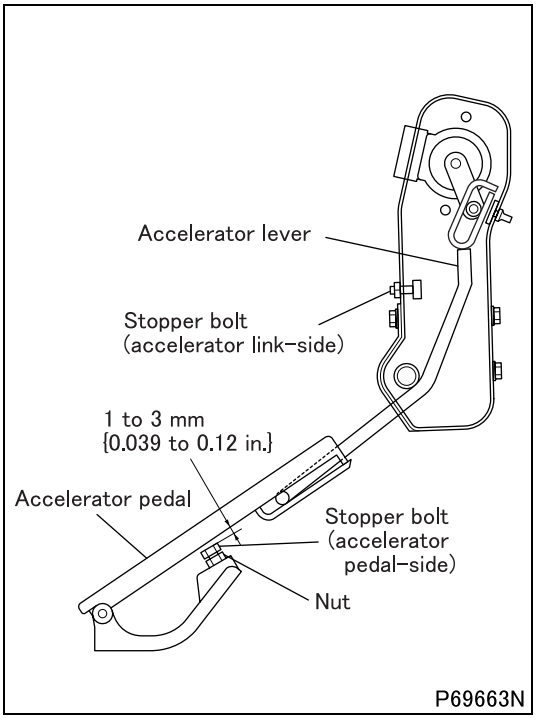

■ **Installation: Accelerator pedal**

- Press the accelerator pedal until the accelerator lever touches the accelerator link stopper bolt.
- Check that the clearance between the stopper and the stopper bolt contact surface of the pedal is as indicated in the illustration.
- If the clearance is not within the indicated value range, adjust the stopper bolt and lock it with the nut.

Accelerator Pedal

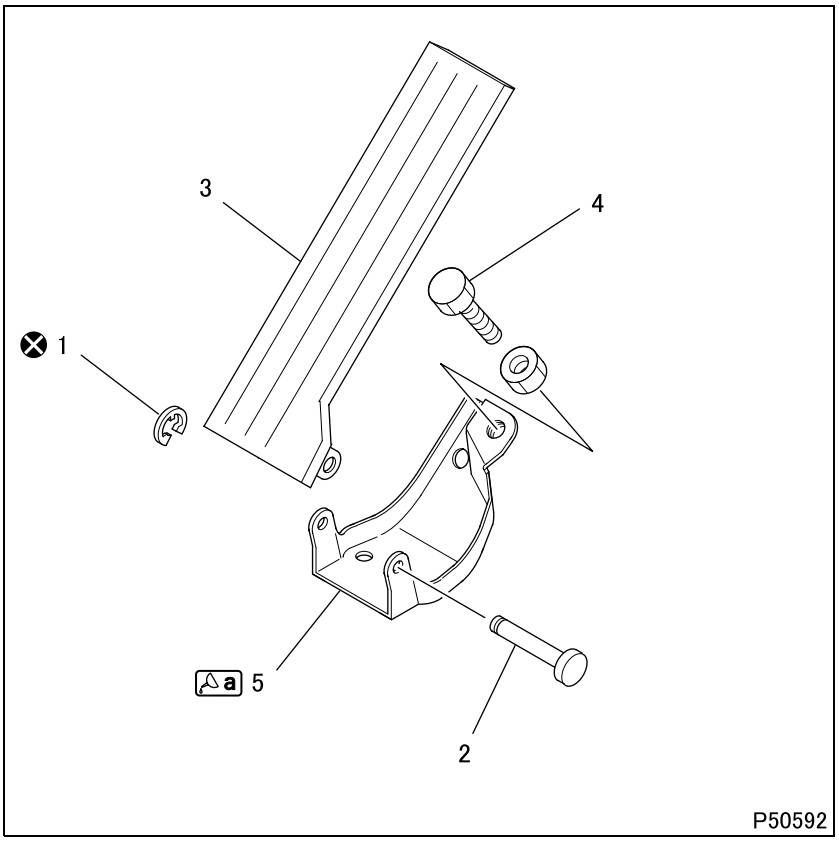

● **Disassembly sequence**

1 E-ring
2 Clevis pin
3 Accelerator pedal
4 Stopper bolt
5 Accelerator pedal bracket

⊗: Non-reusable parts

● **Assembly sequence**

Follow the disassembly sequence in reverse.

Lubricant and/or sealant

Mark	Points of application	Specified lubricant and/or sealant	Quantity
a	Accelerator pedal and bracket contact surfaces	Chassis grease [NLGI No. 1 (Li soap)]	As required

Accelerator Linkage

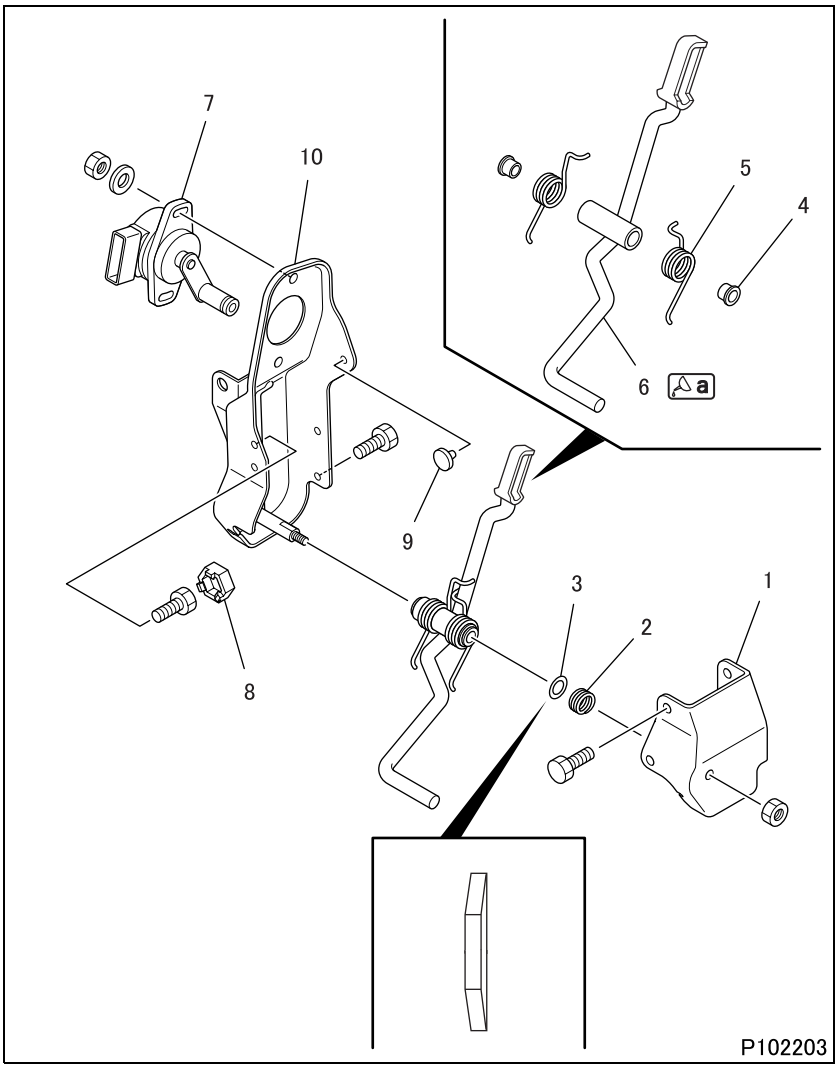

● Disassembly sequence

1 Cover
2 Spring
3 Washer
4 Bushing
5 Return spring
6 Accelerator lever
7 Accelerator position sensor and accelerator switch assembly
8 Lever stopper
9 Rubber stopper
10 Accelerator link bracket

● Assembly sequence

Follow the disassembly sequence in reverse.

- Inspection and adjustment of accelerator position sensor (See Gr13EA.).

Lubricant and/or sealant

Mark	Points of application	Specified lubricant and/or sealant	Quantity
a	Accelerator lever and return spring sliding surface	Chassis grease [NLGI No. 1 (Li soap)]	As required

M E M O

COMMON RAIL

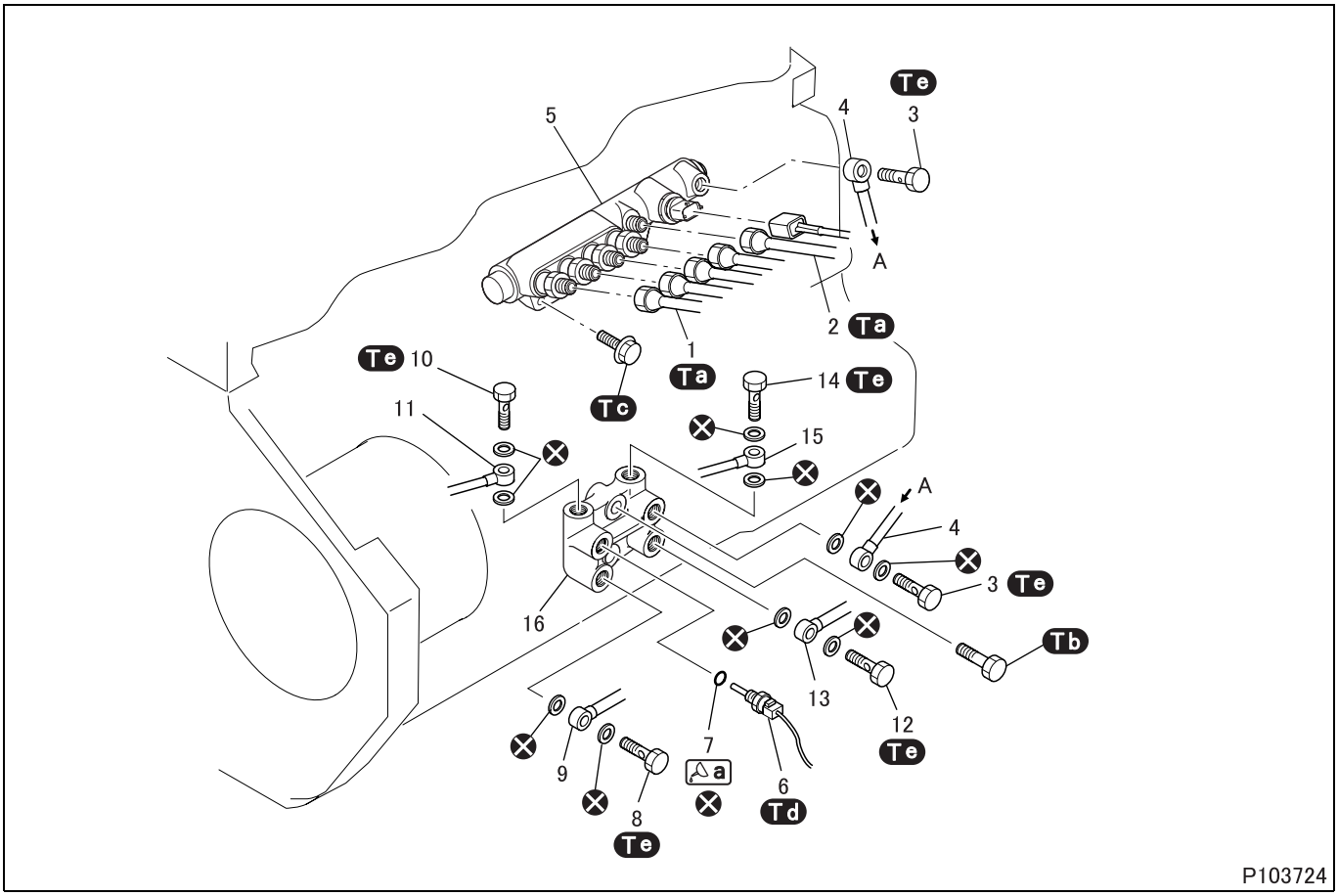

● **Disassembly sequence**

1 Injection pipe
2 Fuel pipe
3 Eyebolt
4 Fuel return pipe B
5 Common rail
6 Fuel temperature sensor
7 O-ring
8 Eyebolt
9 Fuel suction pipe B
10 Eyebolt
11 Fuel suction pipe A
12 Eyebolt
13 Fuel return pipe A
14 Eyebolt
15 Fuel return pipe C
16 Adaptor

⊗: Non-reusable parts

WARNING ⚠

- **Fuel is highly flammable. Do not handle it near flames or heat.**
- **Spilled fuel may catch fire and therefore, must be wiped off completely.**

CAUTION ⚠

- **If dust enters the common rail, the engine performance will be greatly affected. To prevent it, be sure to cover up openings left after pipes and other parts are removed. Also, wash eyebolts, gaskets, etc. in light oil to clear of dirt.**

- Contact Bosch service station for any service needs of the common rail.

● **Assembly sequence**

Follow the disassembly sequence in reverse.

Tightening torque (Unit: N·m {ft.lbs, kgf·m})

Location	Parts to be tightened	Tightening torque	Remarks
Ta	Injection pipe Fuel pipe	30.4 to 35 {22 to 26, 3.1 to 3.6}	–
Tb	Bolt (adaptor mounting)	46 {34, 4.7}	–
Tc	Bolt (common rail mounting)	33 {24, 3.4}	–
Td	Fuel temperature sensor	17.6 to 21.5 {13 to 16, 1.8 to 2.2}	–
Te	Eyebolt (fuel suction pipe mounting) Eyebolt (fuel return pipe mounting)	39 {29, 4.0}	–

Lubricant and/or sealant

Mark	Points of application	Specified lubricant and/or sealant	Quantity
a	O-ring	Engine oil	As required

Special tools (Unit: mm {in.})

Mark	Tool name and shape	Part No.	Application
a	Socket wrench A: 17 {0.67} 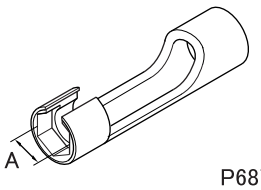 P68771	MH063020	Removal and installation of injection pipe and fuel pipe

◆Removal procedure◆

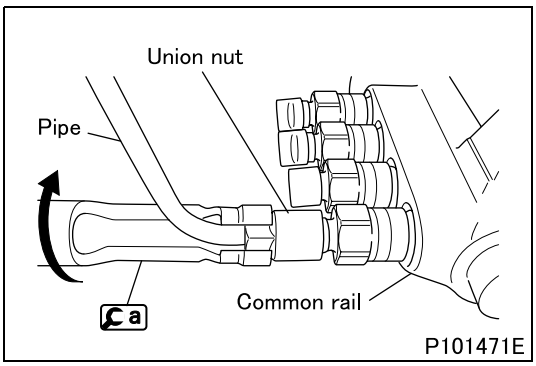

■ Removal: Injection pipe and fuel pipe

- Position a on the pipe and then loosen the union nut.

◆Installation procedure◆

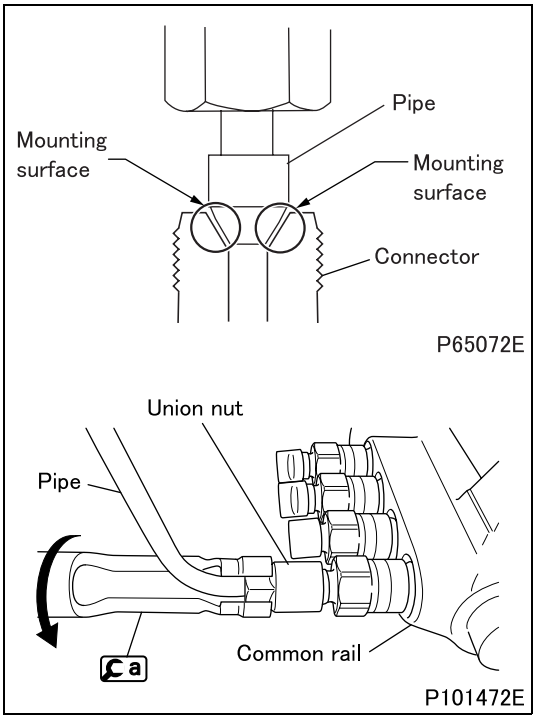

■ **Installation: Injection pipe and fuel pipe**

- Ensure that the pipe and mounting surfaces of the connector are flat and free from damage.
- Bring the pipe into intimate contact with mounting surfaces of the connector evenly, and temporarily tighten it without applying an excessive force.
- After temporary tightening, position the torque wrench on a and then tighten them to the specified torque.

M E M O

SUPPLY PUMP

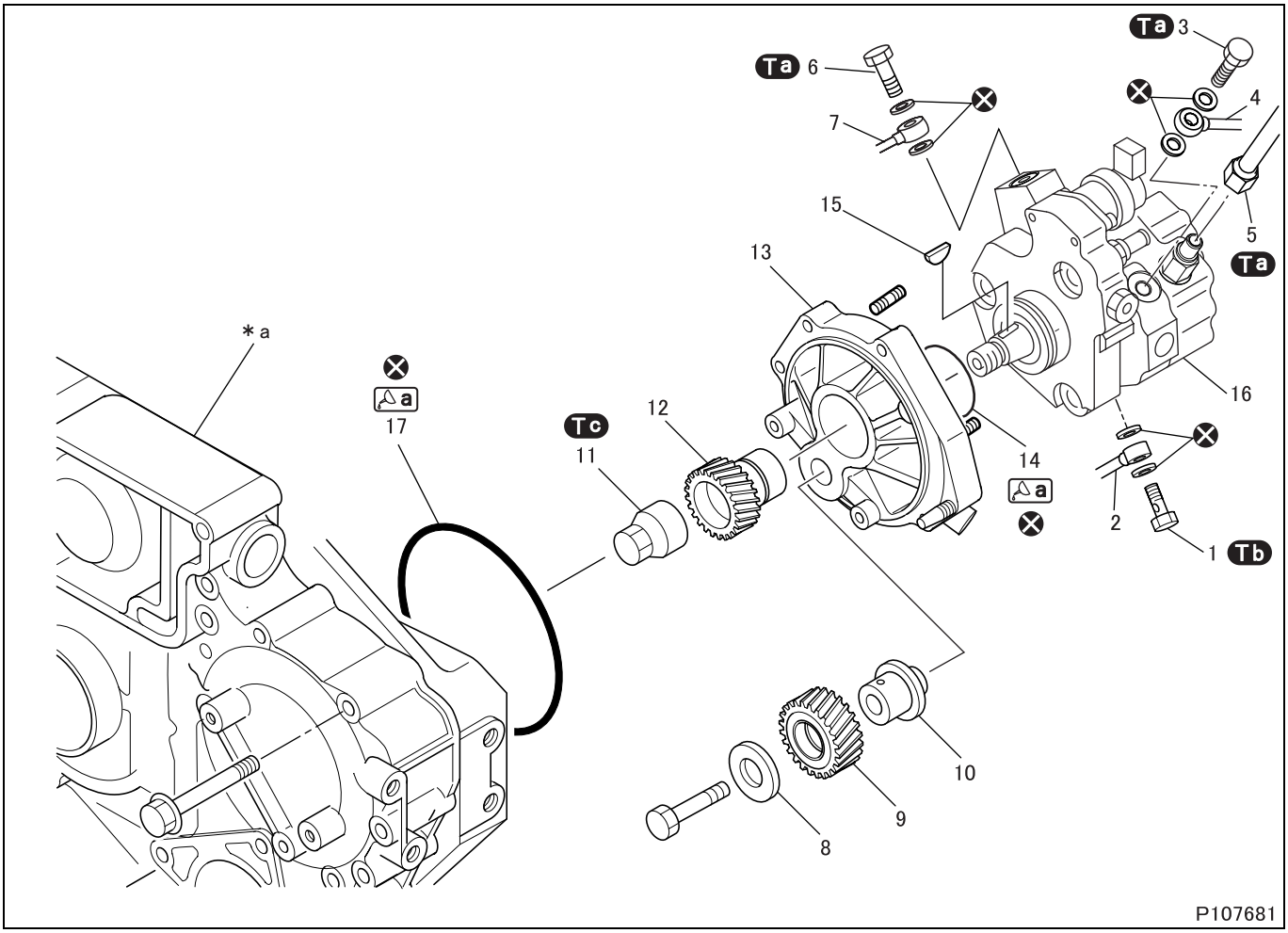

● **Removal sequence**

1 Eyebolt
2 Oil pipe
3 Eyebolt
4 Fuel return pipe
5 Fuel pipe
6 Eyebolt (with gauze filter)
7 Fuel suction pipe
8 Thrust plate
9 No. 2 idler gear
10 No. 2 idler shaft
11 Nut
12 Supply pump gear
13 Flange plate
14 O-ring
15 Key
16 Supply pump
17 O-ring

***a**: Front case
⊗: Non-reusable parts

WARNING ⚠

- **Fuel is highly flammable. Do not handle it near flames or heat.**
- **Spilled fuel may catch fire and therefore, must be wiped off completely.**

CAUTION ⚠

- **Dirt and dust in the supply pump assembly can seriously detract from engine performance. To prevent this from happening, fully cover all open joints after removing any pipes or hoses.**

- Contact Bosch service station for any service needs of the supply pump.

● **Installation sequence**

Follow the removal sequence in reverse.

CAUTION ⚠

- **To start the engine, be sure to connect the connector of the MPROP (rail pressure control valve) to the engine harness. If the engine is started without connecting the MPROP connector, the engine electronic control unit cannot control the supply pump and the fault of the engine may result.**

Tightening torque (Unit: N·m {ft.lbs, kgf·m})

Mark	Parts to be tightened	Tightening torque	Remarks
Ta	Fuel pipe Eyebolt (fuel return pipe mounting) Eyebolt (fuel suction pipe mounting)	25 {18, 2.6}	–
Tb	Eyebolt (oil pipe mounting)	21 {15, 2.1}	–
Tc	Nut (supply pump gear mounting)	105 {77, 11}	–

Lubricant and/or sealant

Mark	Points of application	Specified lubricant and/or sealant	Quantity
a	O-ring	Engine oil	As required

Special tools

Mark	Tool name and shape	Part No.	Application
a	Cranking handle 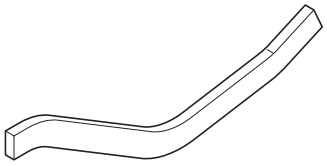 P58299	MH063704	Rotating the fan pulley

◆Installation procedure◆

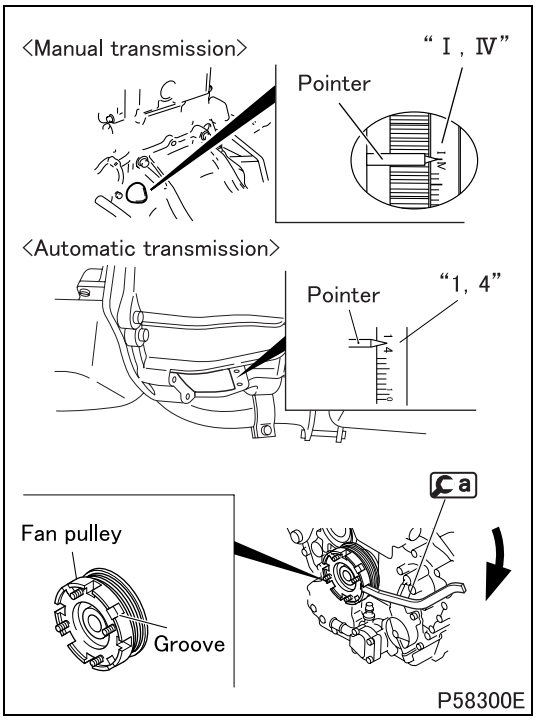

■ Installation: Supply pump

- Remove the rocker cover.
- Bring the No. 1 cylinder piston to the top dead center (TDC) on the compression stroke by the following procedure:
- Hook a on a groove in the fan pulley.
- Turn the fan pulley in the illustrated direction so that the pointer is aligned with the **"Ⅰ, Ⅳ"** or **"1"** to **"4"** mark on the inscribed scale on the flywheel.
- This will place either the No. 1 or No. 4 cylinder piston at TDC on the compression stroke. The cylinder in which the rocker arms for both the intake and exhaust valves can be pushed down by hand by the valve clearance amounts has its piston at TDC. Rotate the engine by one full turn to switch the TDCs of the No. 1 and No. 4 cylinder pistons.

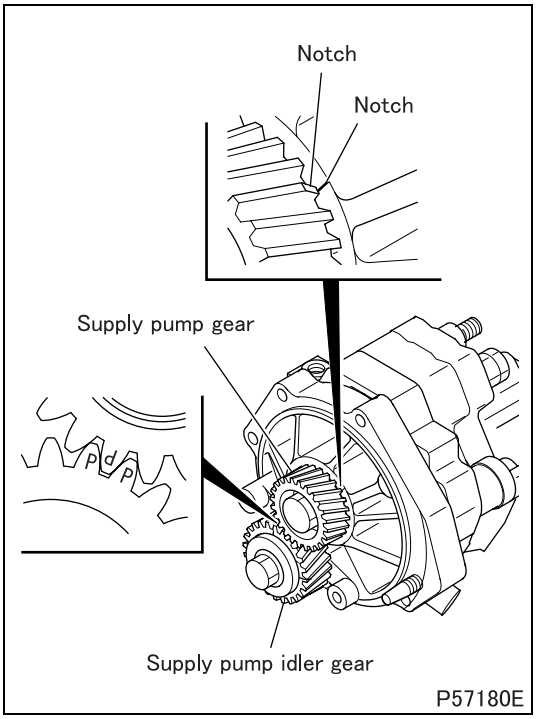

- Align the match mark “P” on the supply pump idler gear with that of the supply pump gear.
- Align the notch on the flange plate with the notch on the supply pump gear.
- Check that the notch on the flange plate and the notch on the supply pump gear are correctly aligned, and then push the supply pump.

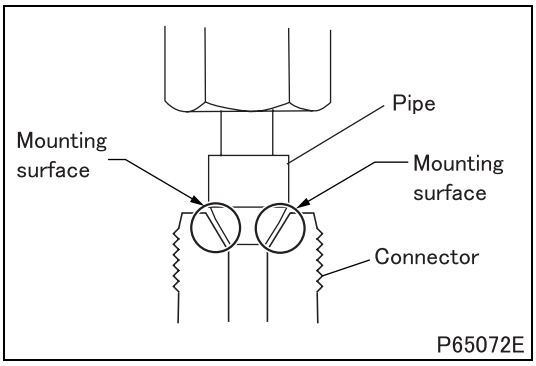

■ Installation: Fuel pipe

- Ensure that the pipe and mounting surfaces of the connector are flat and free from damage.
- Bring the pipe into intimate contact with mounting surfaces of the connector evenly, and temporarily tighten it without applying an excessive force.
- Tighten it to the specified torque after temporary tightening.

M E M O

INJECTOR

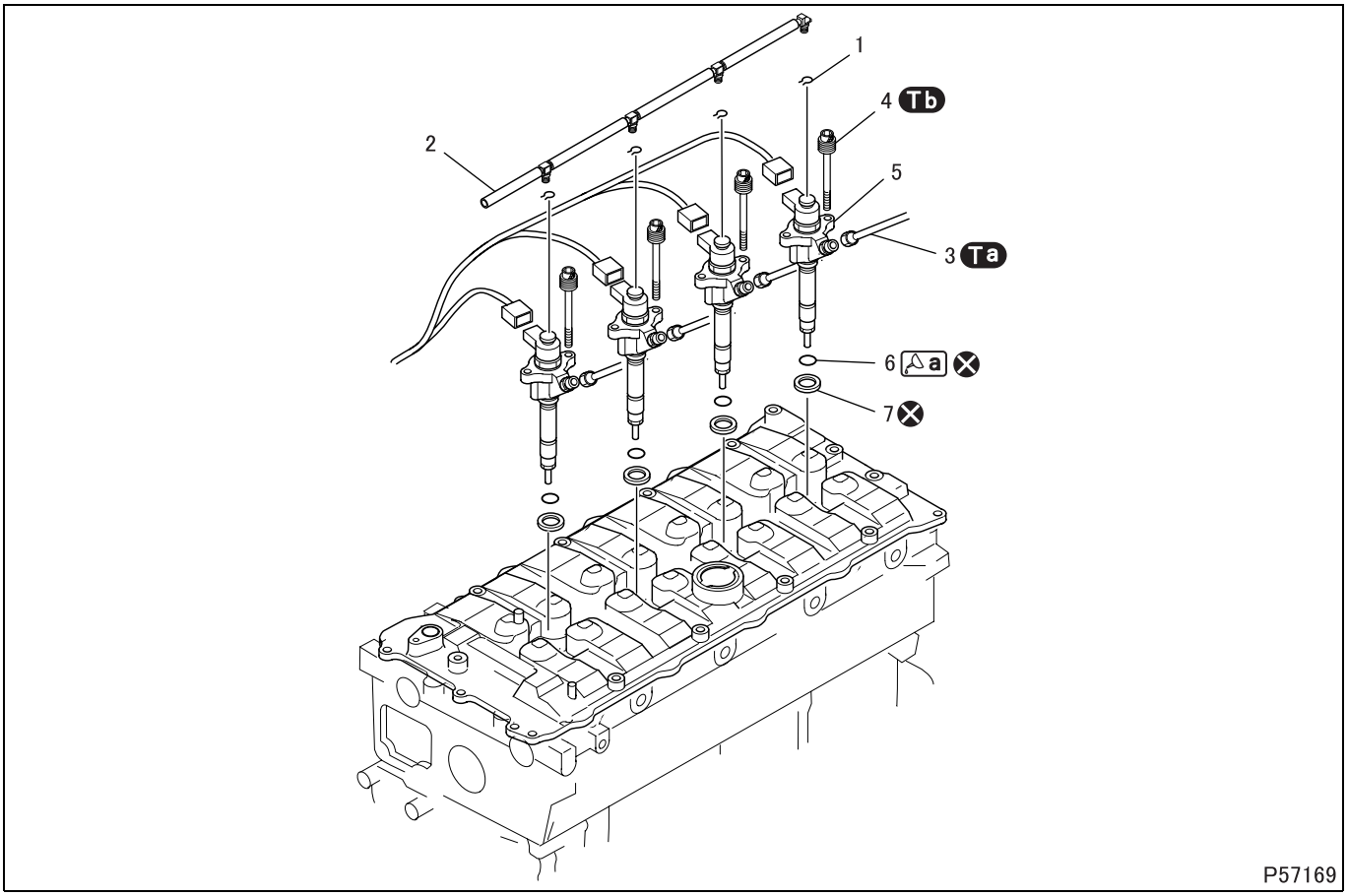

● **Disassembly sequence**

1 Snap ring
2 Fuel return hose
3 Injection pipe
4 Bolt (with hexagonal hole)
5 Injector
6 O-ring
7 Nozzle gasket

⊗: Non-reusable parts

WARNING ⚠

- **Fuel is highly flammable. Do not handle it near flames or heat.**
- **Spilled fuel may catch fire and therefore, must be wiped off completely.**

CAUTION ⚠

- **Before attempting to remove the injectors, turn the starter switch to the LOCK position.**
- **Carefully handle the injector, taking care not to damage the threaded portion and nozzle as high pressure is applied to the injector.**
- **To eliminate fuel injection and other problems, protect the injectors and pipes, that have been removed, from the ingress of contaminants.**

- Contact Bosch service station for any service needs of the injector.

● Assembly sequence

Follow the disassembly sequence in reverse.

CAUTION ⚠

- **Do not attempt to clean the nozzle hole with a wire brush or other similar tools, or the hole can be damaged.**
- **Be sure to tighten the nozzle bridge bolts to the specified torque. Overtightening the bolts can deform the injectors, resulting in incorrect fuel injection.**
- **If an injector is replaced with a new one, the injector correction data must be written in the engine electronic control unit.**
- **For the data writing work, consult your nearest MITSUBISHI FUSO dealer or MITSUBISHI FUSO TRUCK OF AMERICA, Inc.**

Tightening torque (Unit: N·m {ft.lbs, kgf·m})

Mark	Parts to be tightened	Tightening torque	Remarks
Ta	Injection pipe	30.4 to 35 {22 to 26, 3.1 to 3.6}	–
Tb	Bolt (injector mounting)	5.2 to 7.2 {3.8 to 5.3, 0.53 to 0.73}	–

Lubricant and/or sealant

Mark	Points of application	Specified lubricant and/or sealant	Quantity
a	O-ring	Engine oil	As required

Special tools (Unit: mm {in.})

Mark	Tool name and shape	Part No.	Application
a	Socket wrench A: 17 {0.67} 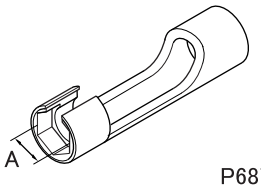 P68771	MH063020	Removal and installation of injection pipe

◆Removal procedure◆

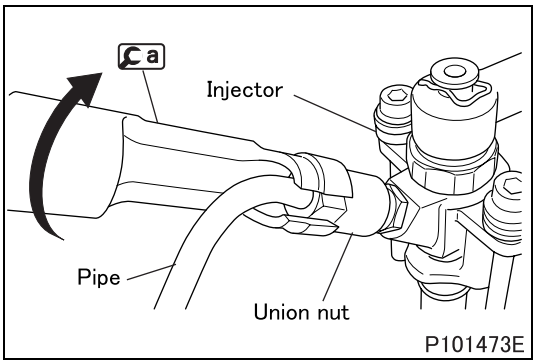

P101473E

■ Removal: Injection pipe

- Position a on the pipe and then loosen the union nut.

◆Installation procedure◆

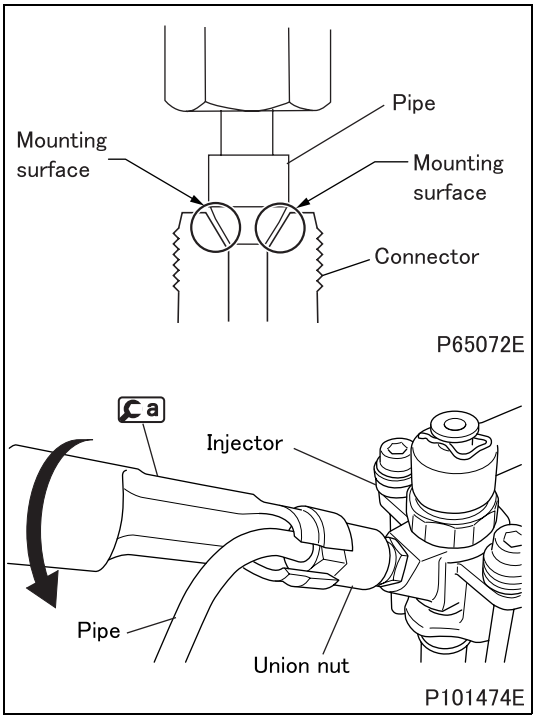

■ **Installation: Injection pipe**

- Ensure that the pipe and mounting surfaces of the connector are flat and free from damage.
- Bring the pipe into intimate contact with mounting surfaces of the connector evenly, and temporarily tighten it without applying an excessive force.
- After temporary tightening, position the torque wrench on a and then tighten them to the specified torque.

Group 13EA

Common Rail System

Table of Contents

Back

Home

MITSUBISHI FUSO TRUCK OF AMERICA, Inc.

Pub.No.TWSE0805-13EA

INDEX

SPECIFICATIONS 13EA-2

STRUCTURE AND OPERATION

1. **Overview 13EA-3**
2. **Electronic Control System 13EA-12**
3. **Electronic Control Unit Connection Diagram 13EA-20**

TROUBLESHOOTING

1. **Diagnosis Procedure 13EA-22**
2. **Diagnostic Precautions 13EA-22**
3. **Inspections Based on Fault Codes 13EA-23**
4. **Multi-Use Tester Service Data 13EA-964**
5. **Mode 06 Data 13EA-968**
6. **Actuator Tests Performed Using Multi-Use Tester 13EA-970**

REGISTRATION AND ALTERATION OF DATA IN ENGINE ELECTRONIC CONTROL UNIT

1. **Operation at Electronic Control Unit Replacement 13EA-974**
2. **Resetting the Diesel Particulate Filter Related Information (Resetting Electronic Control Unit) 13EA-974**

INSPECTION OF ELECTRICAL EQUIPMENT 13EA-976

INSTALLED LOCATIONS OF PARTS 13EA-986

ELECTRIC CIRCUIT DIAGRAM 13EA-992

SPECIFICATIONS

Item			Specifications
Supply pump	Manufacturer		Bosch
	Model		CP3.3 NH
	Control method		Electronic
	Type		Radial, 3-cylinder
	Type		External gear type
	Rail pressure control valve	Model	MPROP
		Rated voltage V	12
	Max. common rail pressure MPa {psi, kgf/cm^2}		180 {26100, 1840}
Common rail	Manufacturer		Bosch
	Common rail volume cm^3 {cu. in., ml}		18.7 {1.14, 18.7}
	Pressure limiting valve opening pressure MPa {psi, kgf/cm^2}		210 to 220 {30450 to 31900, 2141 to 2243}
	Common rail pressure sensor supply voltage V		5
Injectors	Manufacturer		Bosch
	Control method		Electrical
	Max. operating pressure MPa {psi, kgf/cm^2}		180 {26100, 1840}
	Min. operating pressure MPa {psi, kgf/cm^2}		25 {3630, 255}
Common rail electronic control unit	Manufacturer		Bosch
	Rated voltage V		12

1. Overview

- In the common rail system, an electronic control unit monitors various aspects of the engine (engine speed, throttle opening, coolant temperature, etc.) using information from sensors. In accordance with these data, the electronic control unit effects control over the fuel injection quantity, fuel injection timing, and fuel injection pressure in order to optimize the engine's operation.
- The electronic control unit has a diagnosis function that enables it to recognize abnormalities in the common rail system's major components and alert the driver to them.
- The common rail system consists mainly of an electronically controlled supply pump; injectors; a common rail; and the electronic control unit and sensors that are used to control the other components.

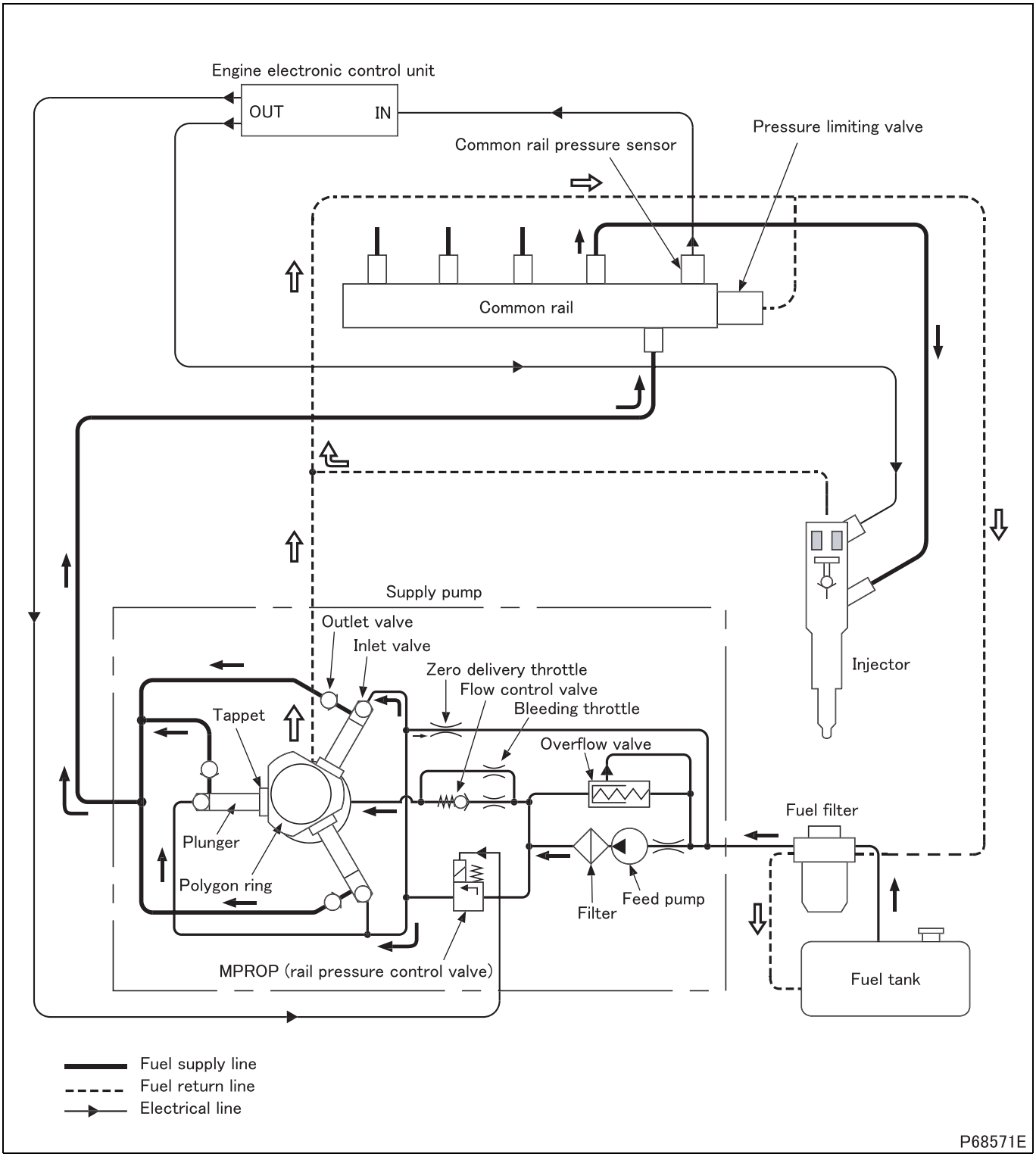

- When the engine is cranked by means of the starter switch, the feed pump (this is located inside the supply pump) simultaneously draws fuel from the fuel tank and feeds it via the fuel filter to the MPROP (rail pressure control valve). A quantity of fuel metered by the MPROP is supplied via the inlet valves to the plunger chambers.
- The fuel in the plunger chambers is pressurized. The outlet valves are then opened, and the fuel is fed under pressure to the common rail.
- The pressurized fuel is held in the common rail and then uniformly fed to the injectors.
- In response to signals from the engine electronic control unit, a magnetic valve in each injector causes the injector to inject fuel into the relevant combustion chamber at the optimal timing and in the optimal quantity.

1.1 Supply pump

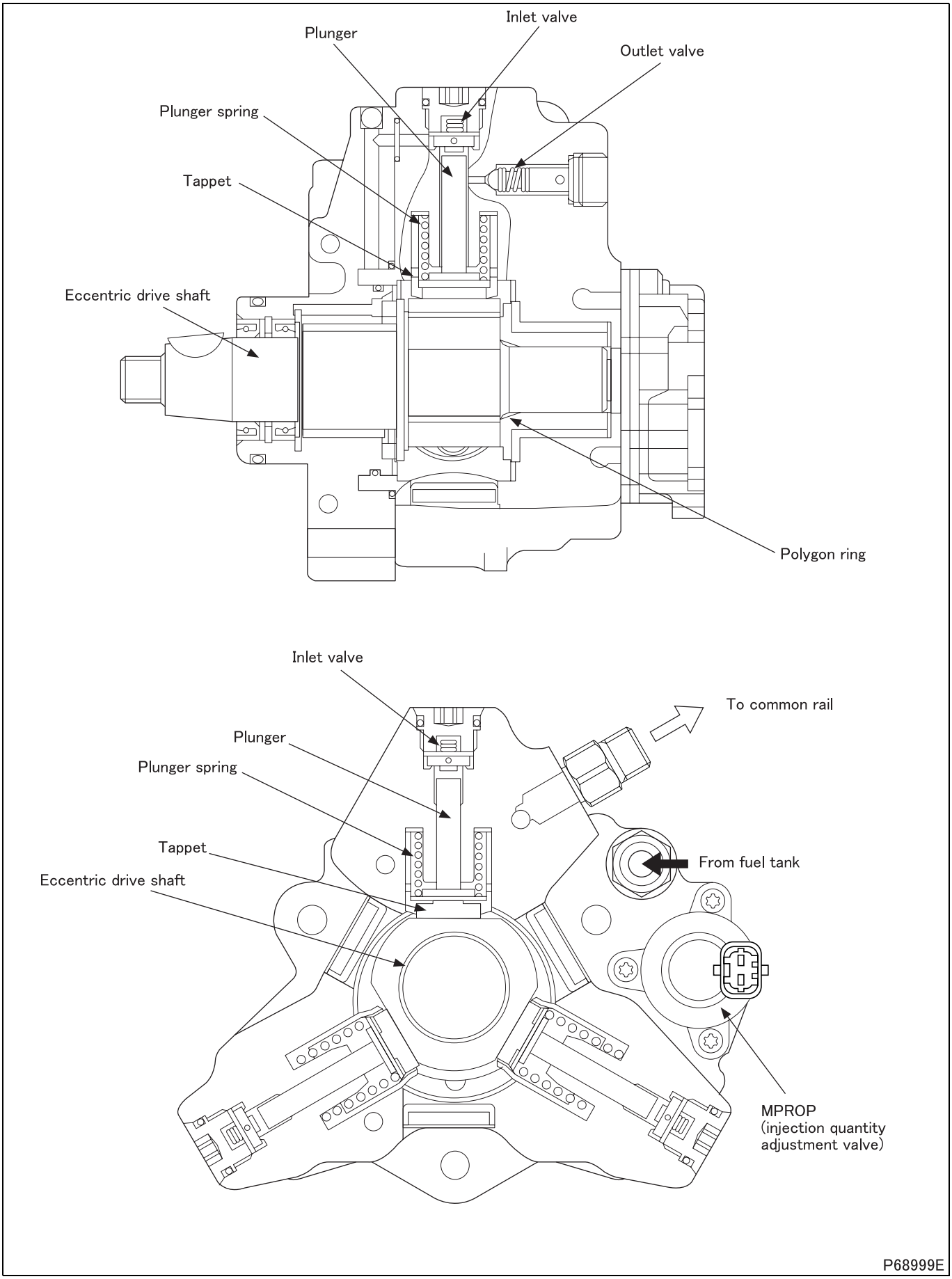

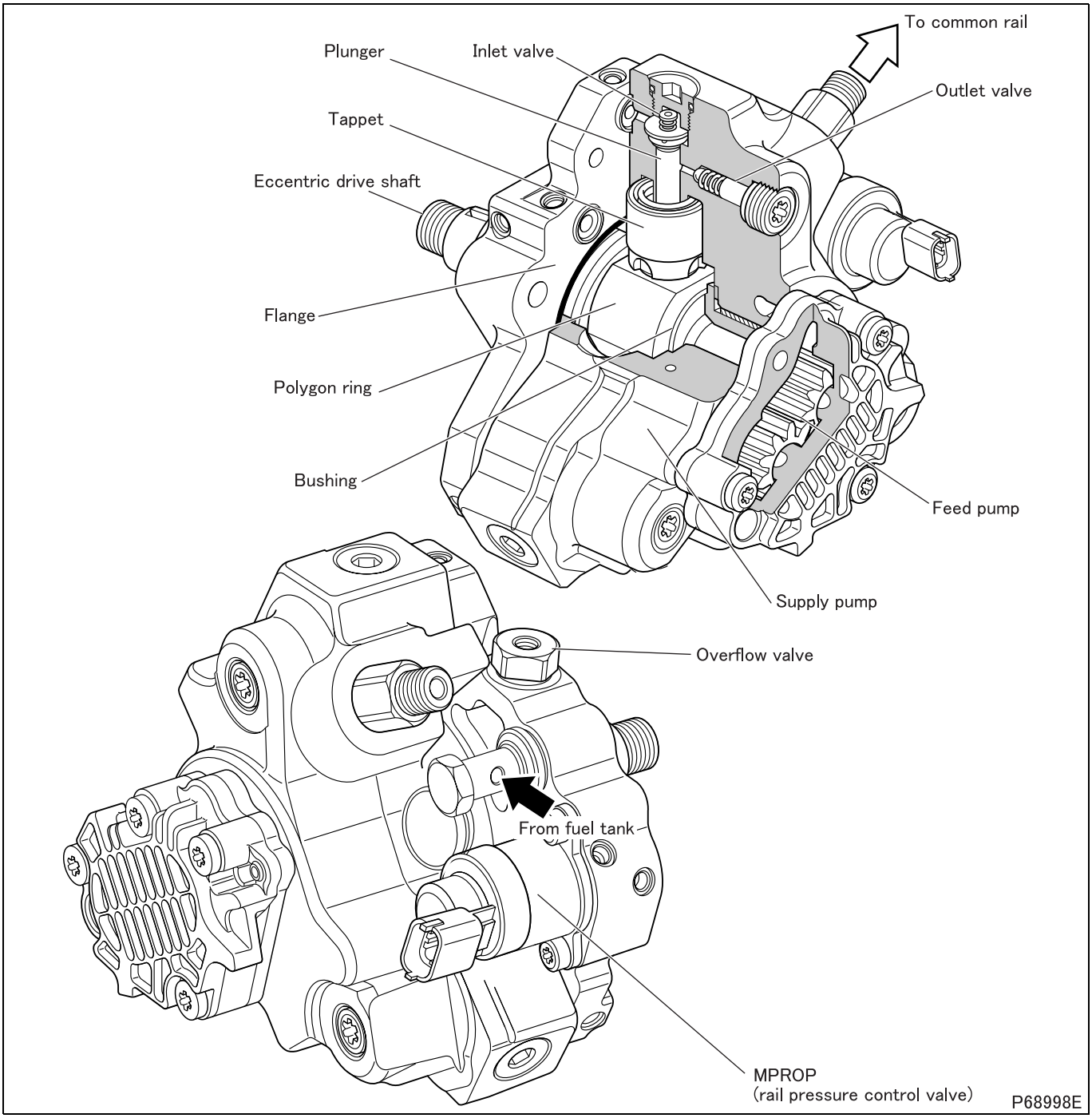

CAUTION ⚠

- **Be sure to connect the MPROP (rail pressure control valve) connector to the engine harness before starting the engine. If the engine were started with the MPROP connector not connected, control of the supply pump by the engine electronic control unit would not be possible and a fault would ensue.**

- The supply pump pressurizes fuel and supplies it in a highly pressurized state.
- Fuel drawn from the fuel tank by the feed pump is not supplied directly to the plungers. It is supplied first to the MPROP (rail pressure control valve), which controls the amount of fuel reaching the plungers.
- If the fuel pressure exceeds a certain level, the overflow valve returns fuel to the inlet side of the feed pump. This operation keeps the fuel pressure constant.
- Rotation of the eccentric drive shaft causes (via the tappets) up-down movement of the plungers. Fuel in the plunger chambers is thus highly pressurized.

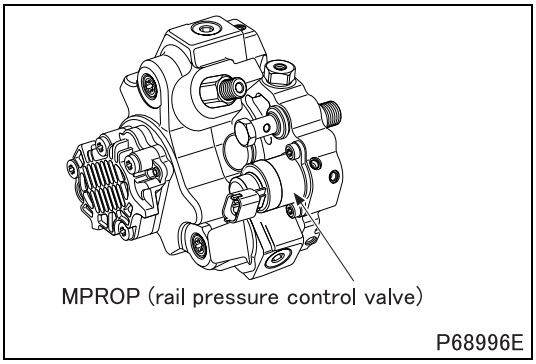

(1) MPROP (rail pressure control valve)

- The MPROP receives fuel from the feed pump and feeds fuel toward the plungers of the supply pump in such a quantity that the fuel pressure corresponds to that required by the engine electronic control unit.
- When the MPROP is not operating, i.e., when current is not flowing, fuel flows at its maximum rate. When current flows, the piston in the MPROP is pressed down such that fuel is not fed toward the plungers.

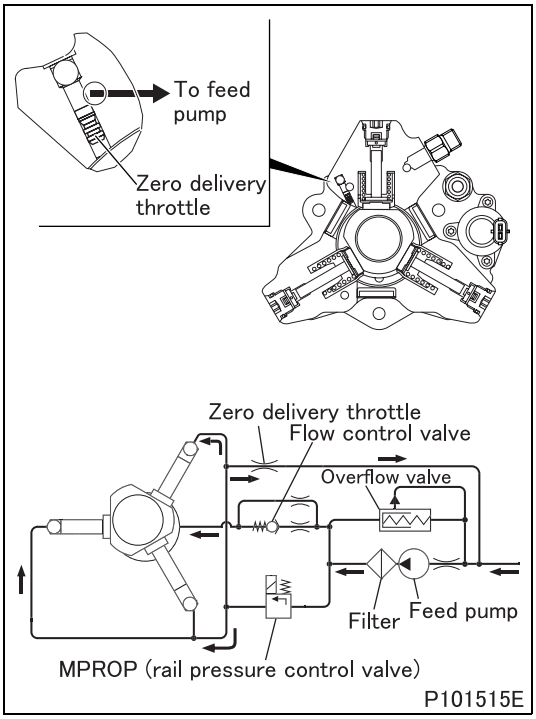

(2) Zero delivery throttle

- A small amount of fuel can flow through the MPROP (rail pressure control valve) even when no fuel is to be supplied. The zero delivery throttle prevents this fuel flow by returning the fuel to the inlet port side of the feed pump to zero the fuel delivery to the plunger.

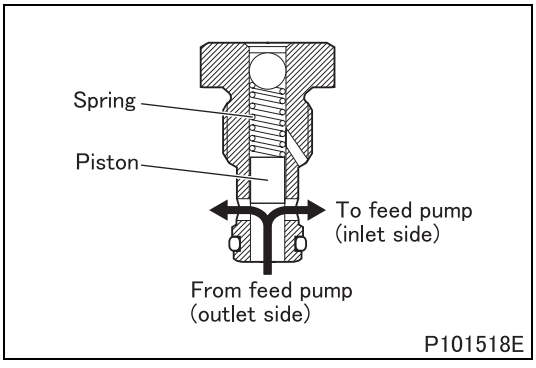

(3) Overflow valve

- The overflow valve limits the pressure of the fuel sent from the feed pump to the predetermined level.
- When fuel pressure exceeds the predetermined level, it overcomes the spring force of the overflow valve to move the piston, returning the fuel to the inlet side of the feed pump.
  The fuel which has overflowed enters into the eccentric drive shaft chamber to lubricate the parts in the chamber.

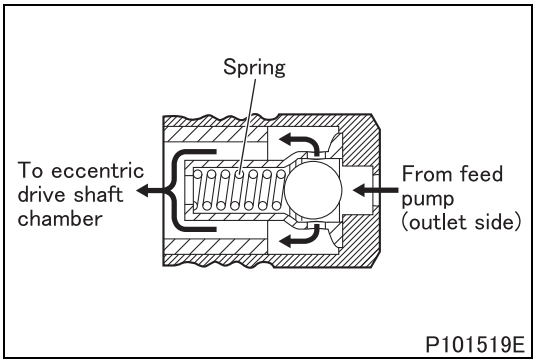

(4) Flow control valve

- The flow control valve sends the fuel from the feed pump into the eccentric drive shaft chamber for lubrication of parts in the chamber.
- When the revolution of the feed pump increases, fuel pressure also increases. It overcomes the spring force of the flow control valve to move the ball, sending the fuel to the eccentric drive shaft chamber for lubrication of parts in the chamber.

1.2 Common rail

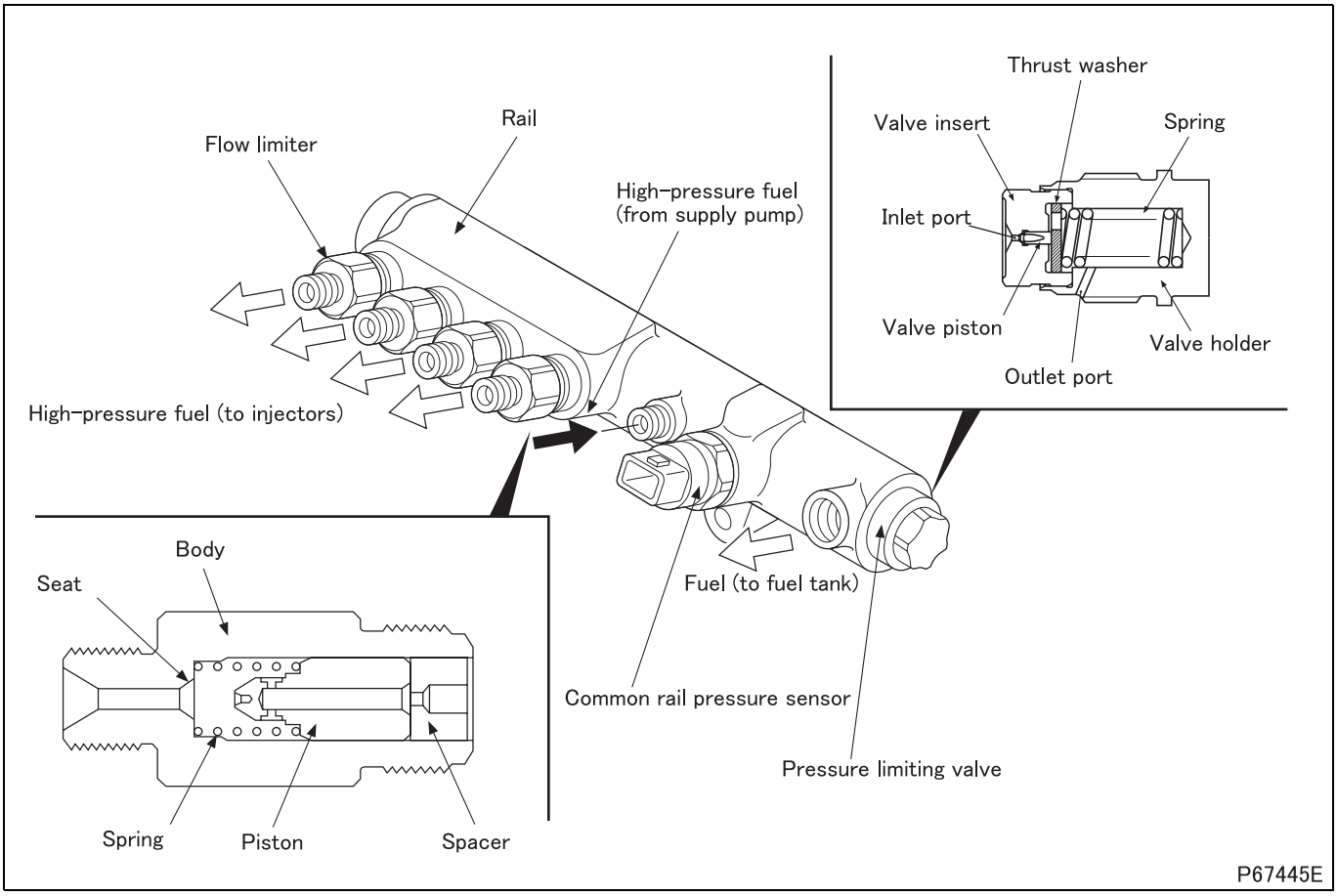

- The common rail distributes to the injectors high-pressure fuel that has been fed from the supply pump.
- Each flow limiter prevents an abnormal outflow of fuel. It does so by blocking the fuel passage in the event of fuel leakage from the injection pipe or excessive injection of fuel from the injector.
- The common rail pressure sensor is used in feedback control. It senses the fuel pressure inside the common rail and feeds a corresponding signal to the electronic control unit.
- If the fuel pressure in the common rail exceeds a certain, set level, the piston in the pressure limiting valve pushes and compresses the spring such that fuel is able to escape. The pressure limiting valve thus prevents the fuel pressure from becoming higher than the set pressure.

Flow limiter

- During normal operation, the piston moves (thus pushing and compressing the spring) to the extent necessary for one injection quantity to pass through. The piston does not make contact with the seat at this time. When injection is complete, the piston is returned to its initial position by the spring.
- If the amount of fuel passing through the flow limiter becomes excessively great, the piston presses against the seat, thereby closing the fuel passage and preventing an abnormal outflow of fuel.
  When the piston has pressed against the seat, it does not return to its original position until the engine has been stopped and the pressure in the common rail has come down.

1.3 Injector

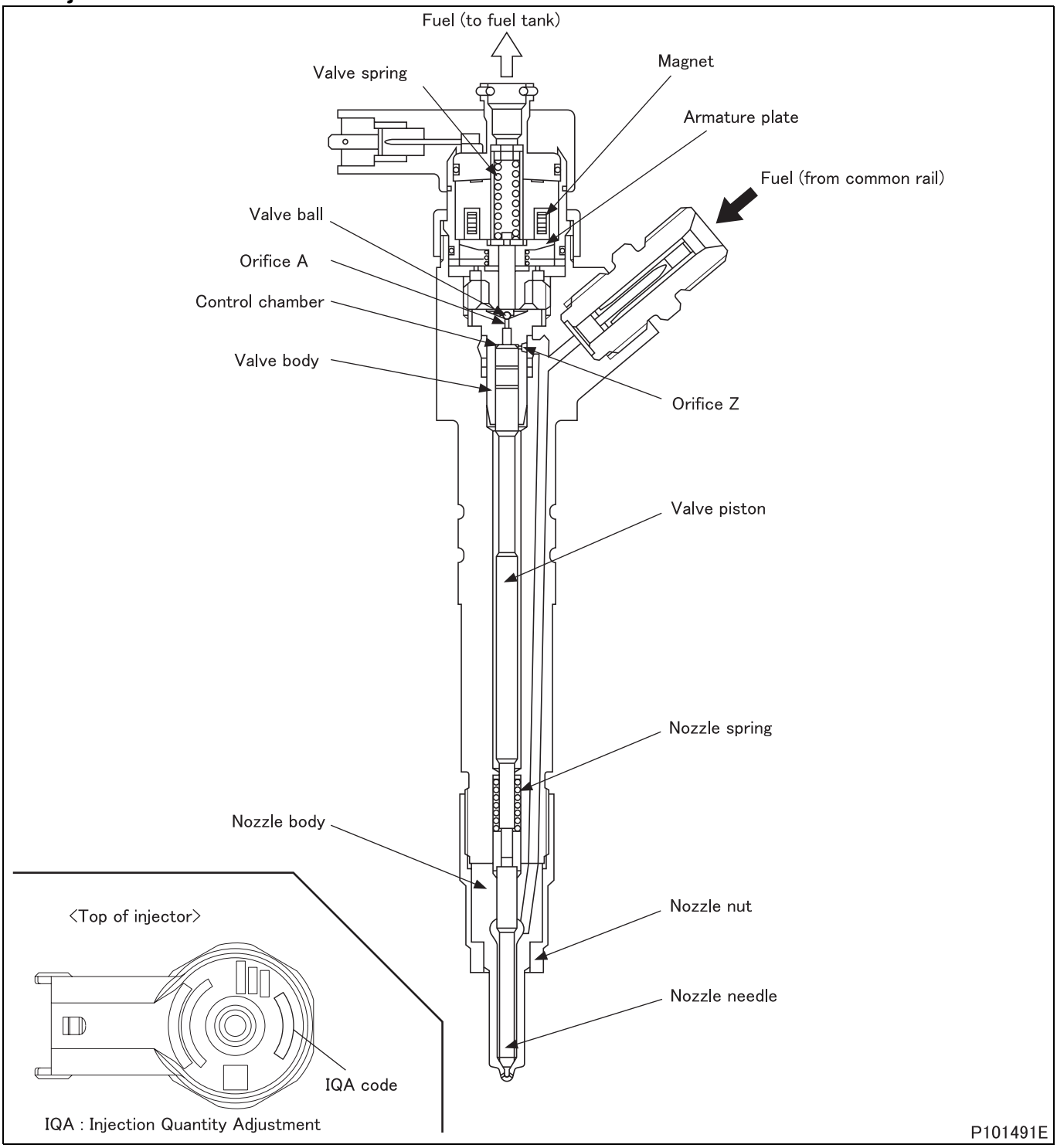

- In accordance with electrical signals from the engine electronic control unit, the injector supplies high-pressure fuel from the common rail to the relevant combustion chamber of the engine at the optimal timing and in the optimal quantity.
- The injector is divided into the control section and injector section.
  - The control section consists of the control chamber, magnet, spring, armature plate, valve ball, valve body, valve piston, orifice A, and orifice Z. The valve piston is located between the control section and the injector section.
  - The injector section consists of the nozzle body, nozzle needle, nozzle spring, and nozzle nut.
- On the top of the injector is marked the IQA (Injection Quantity Adjustment) code for entry of injector correction data into the engine electronic control unit.
- The fluctuation of each injector in injection quantity is thereby restrained.

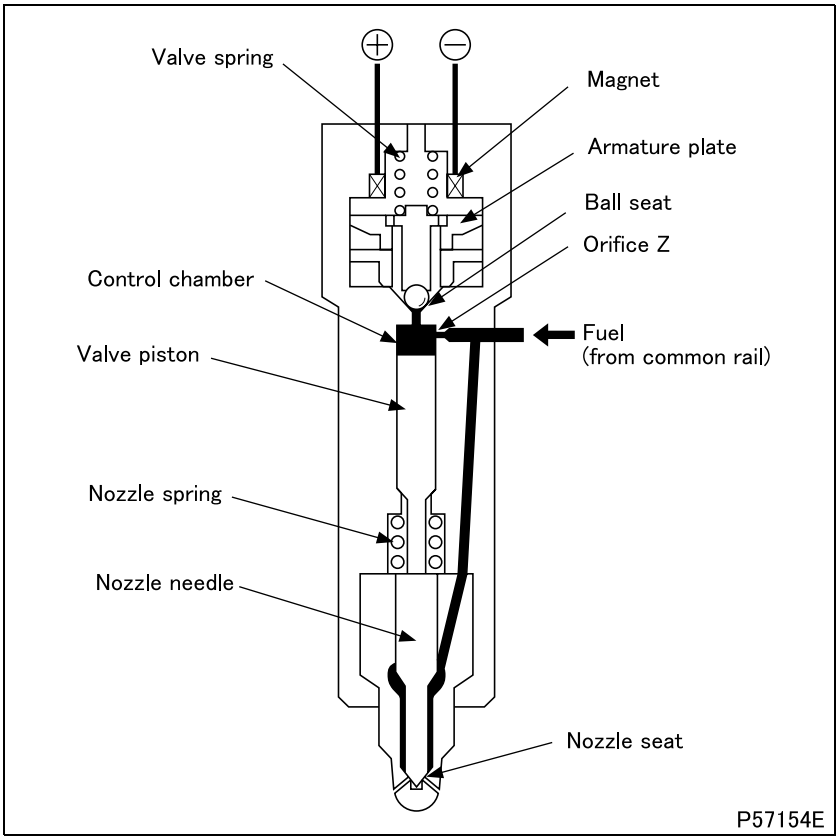

(1) Operation

(1.1) Injection not taking place

- With the magnet not energized, the armature plate is pushed up by the valve spring such that the ball seat is closed.
- The high-pressure fuel acts upon the control chamber via orifice Z. The same pressure acts upon the nozzle needle.
- The fuel pressure acting on the nozzle needle cannot overcome the valve piston and nozzle spring, so the nozzle needle stays in its downward-pushed position and injection does not take place.

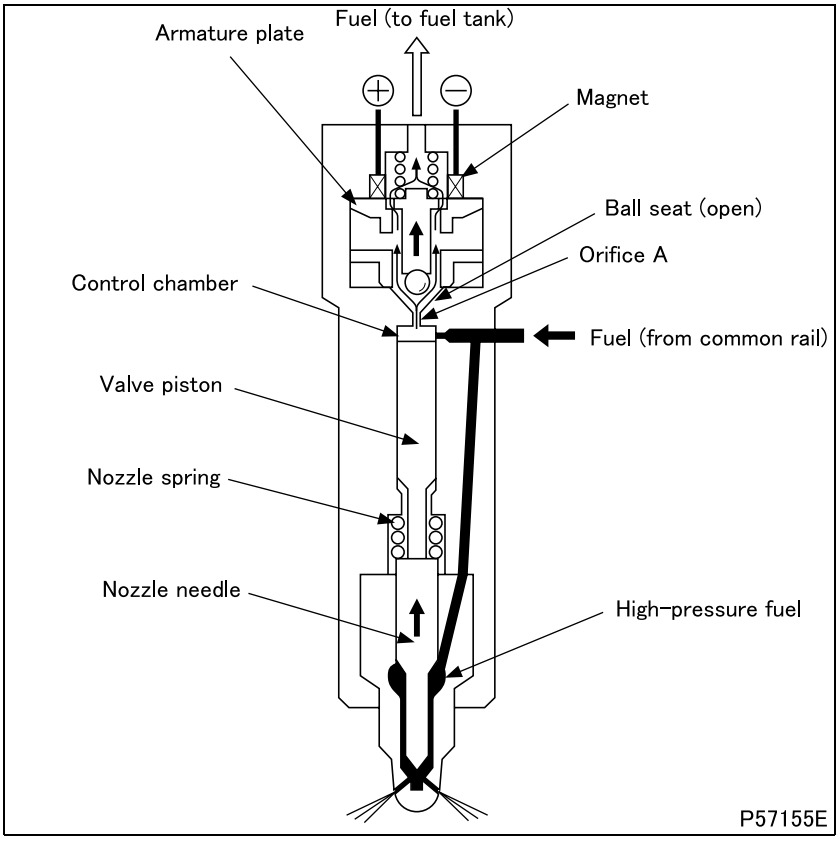

(1.2) Start of injection

- When the magnet is energized, the resulting electromagnetic force draws the armature plate upward, causing the ball seat to open.
- Fuel in the control chamber passes through the ball seat and orifice A and flows to the fuel tank.
- With the pressure in the control chamber reduced, the fuel acting on the nozzle needle overcomes the valve piston and nozzle spring, pushing up the nozzle needle such that injection starts.
- If the magnet remains energized, the injection rate reaches its maximum level.

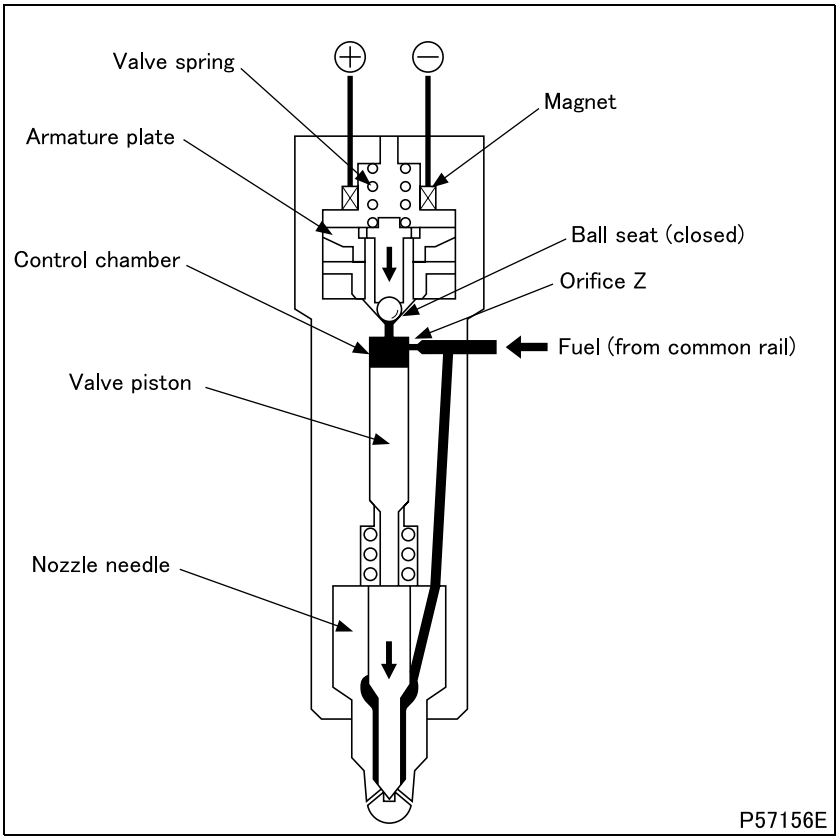

(1.3) End of injection

- When energization of the magnet is stopped, the armature plate is pushed downward by the valve spring such that the ball seat closes. At this time, fuel flows into the control chamber via orifice Z, pushing down the valve piston and nozzle needle such that injection finishes.

2. Electronic Control System

2.1 System block diagram

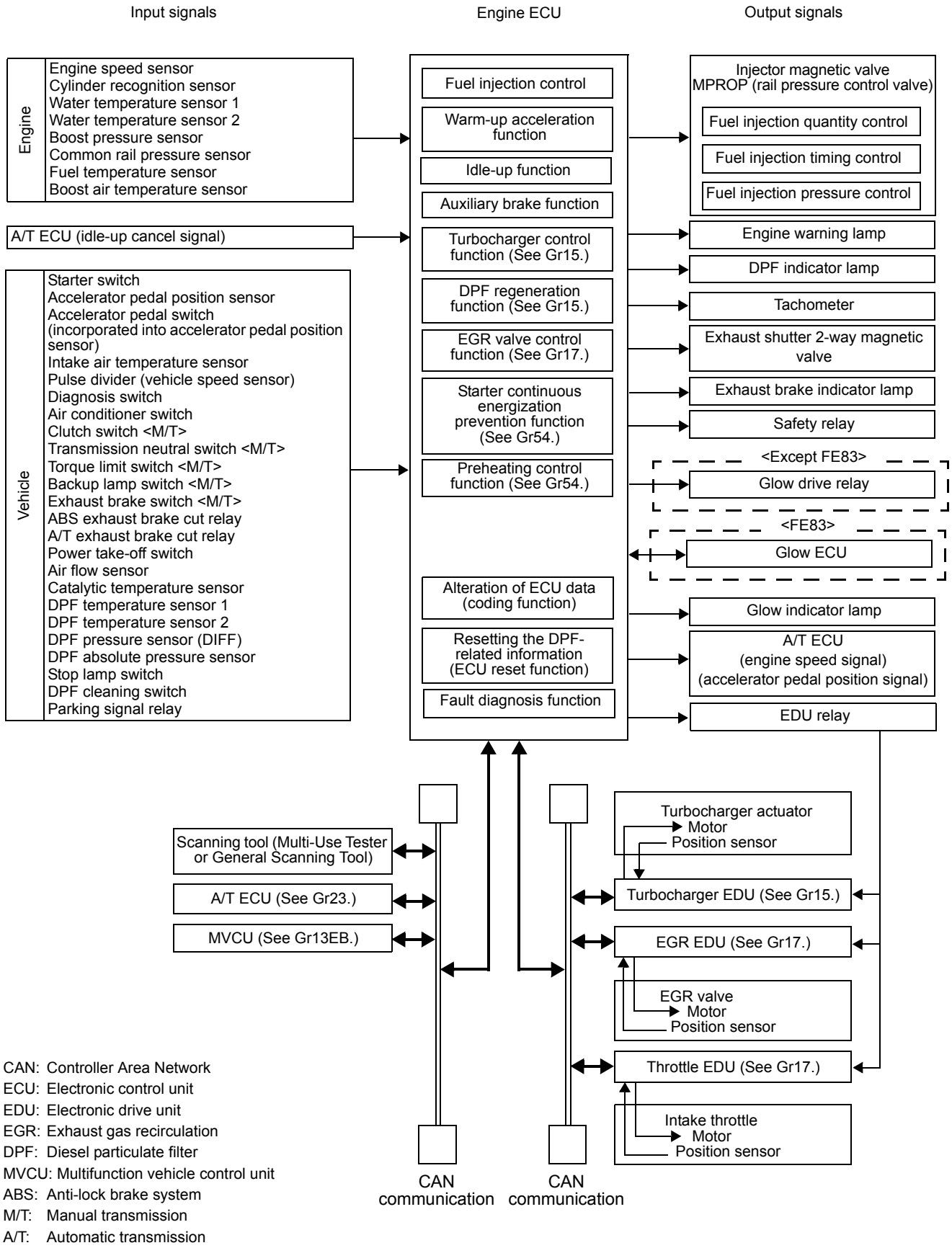

CAN: Controller Area Network
ECU: Electronic control unit
EDU: Electronic drive unit
EGR: Exhaust gas recirculation
DPF: Diesel particulate filter
MVCU: Multifunction vehicle control unit
ABS: Anti-lock brake system
M/T: Manual transmission
A/T: Automatic transmission

Part name	Main function/operation
Engine speed sensor	Sensing of engine speed
Cylinder recognition sensor	Cylinder recognition
Water temperature sensor 1	Sensing of coolant temperature
Water temperature sensor 2	• Backup of coolant temperature • Sensing of coolant temperature for temperature gauge
Boost pressure sensor	Sensing of boost pressure
Common rail pressure sensor	Sensing of common rail pressure
Fuel temperature sensor	Sensing of fuel temperature
Boost air temperature sensor	Detection of intake air temperature after joining the exhaust gas recirculation
Starter switch	Senses that the engine is in starting condition with the starter switch in START position.
Accelerator pedal position sensor	Sensing of extent of accelerator pedal depression
Accelerator pedal switch (incorporated into accelerator pedal position sensor)	Sensing of released/pressed condition of accelerator pedal (ON with pedal released)
Intake air temperature sensor	Sensing of intake air temperature
Pulse divider (vehicle speed sensor)	Sensing of vehicle speed
Diagnosis switch	Output of diagnosis codes
Air conditioner switch	ON when air conditioner is operating
Clutch switch <M/T>	Sensing of released/pressed condition of clutch pedal (OFF with pedal released)
Transmission neutral switch <M/T>	Detection of transmission neutral condition (OFF with transmission in neutral)
Torque limit switch <M/T>	Detection of transmission 1st and Rev positions
Backup lamp switch <M/T>	
Exhaust brake switch	Operation of auxiliary brake
ABS exhaust brake cut relay	Exhaust brake cut signal for ABS operation
Automatic transmission exhaust brake cut relay	Exhaust brake cut signal with selector in P or N range position and vehicle at low speed
Power take-off switch	Operation of power take-off
Air flow sensor	Sensing of intake air flow rate
Catalytic temperature sensor	Detection of front oxidation catalytic inlet temperature
DPF temperature sensor 1	Detection of ceramic filter inlet temperature
DPF temperature sensor 2	Detection of ceramic filter outlet temperature
DPF absolute pressure sensor	Sensing of DPF absolute pressure value
DPF pressure sensor (DIFF)	Sensing of DPF filter differential pressure
Stop lamp switch	Sensing of released/pressed condition of brake pedal (OFF with pedal released)
DPF cleaning switch	ON/OFF changeover of DPF manual regeneration
Parking signal relay (parking brake switch)	Detection of parking condition (turns ON when the parking brake is applied)
Injector magnetic valve	Control of fuel injection pressure, fuel injection quantity, and fuel injection timing
MPROP (rail pressure control valve)	Control of fuel injection pressure
Engine warning lamp	Indication of system abnormalities Illuminates when the particulate matter accumulation in the DPF ceramic filter is excessive
DPF indicator lamp	Illuminates when the particulate matter accumulates in the DPF ceramic filter
Tachometer	Indicates engine speed (revolutions per minute)

Part name		Main function/operation
Exhaust shutter 2-way magnetic valve		ON/OFF changeover of exhaust shutter valve
Exhaust brake indicator lamp		Illuminates when exhaust brake system is operating
Safety relay		Changeover of starter continuous energization prevention function
Glow drive relay <Except FE83>		ON/OFF changeover of glow plugs
Glow ECU <FE83>		ON/OFF changeover of glow plugs and troubleshooting
Glow indicator lamp		ON when preheating system is started
Automatic transmission ECU	Idle-up cancel signal	Releasing the idle-up except N range
	Engine speed signal	Output of engine speed for A/T control
	Accelerator pedal position signal	Output of extent of accelerator pedal for A/T control
EDU relay		ON/OFF changeover of power supply to turbocharger, EGR and throttle EDU
CAN communication (Turbocharger EDU, EGR EDU, throttle EDU)		Engine data recognized by the engine ECU are outputted to the CAN bus to enable systems to obtain data that they need for control. Each system's EDU issues signals to the engine ECU to enable it to effect engine control appropriate to control of the system. (See Gr15 for Turbocharger EDU control.) (See Gr17 for EGR EDU and throttle EDU control.)
CAN communication (A/T ECU, MVCU)		Engine data recognized by the engine ECU are outputted to the CAN bus to enable systems to obtain data that they need for control. The A/T ECU and MVCU issue signals to the engine ECU to enable it to effect engine control appropriate to control of the system. (See Gr23 for A/T ECU.) (See Gr13EB for MVCU.)
CAN communication (scanning tool)		Indicating and erasing fault codes and obtaining the vehicle data of the ECU

M E M O

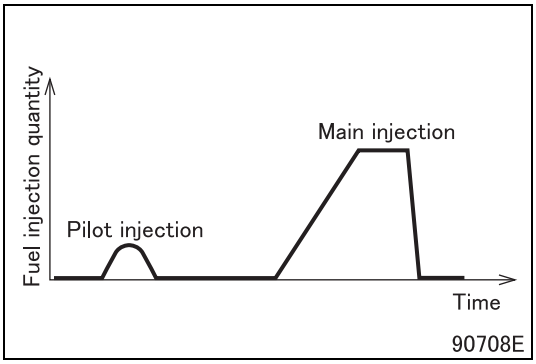

2.2 Fuel injection rate control

(1) Pilot injection

- Pilot injection entails the injection of an extremely small amount of fuel ahead of the main injection.
- Pilot injection suppresses heat generation early in the injection cycle and thus suppresses NOx generation and noise at the start of combustion.

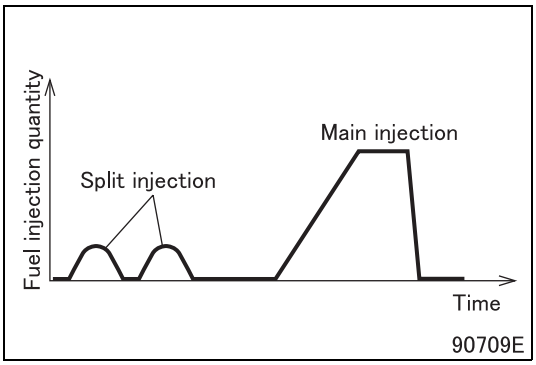

(2) Split injection control

- Split injection entails the injection of an extremely small amount of fuel two or more times ahead of the main injection.
- Split injection increases the fuel's combustibility and thus enhances the engine's cold startability.

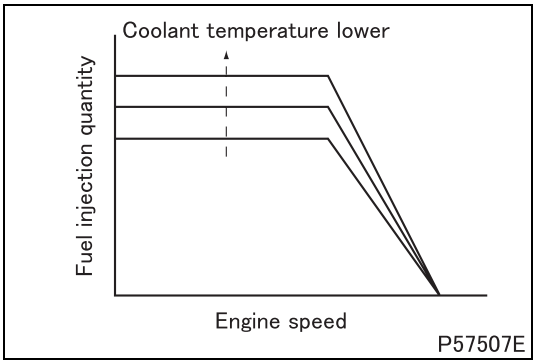

2.3 Fuel injection quantity control

(1) Fuel injection quantity during engine startup

- During engine startup, the fuel injection quantity is determined in accordance with the engine speed and coolant temperature.

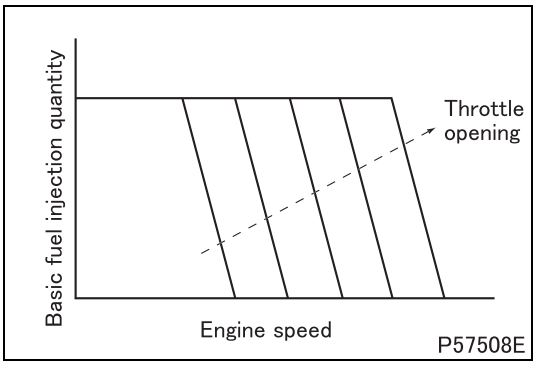

(2) Basic fuel injection quantity

- The basic fuel injection quantity is determined in accordance with the engine speed and throttle opening.

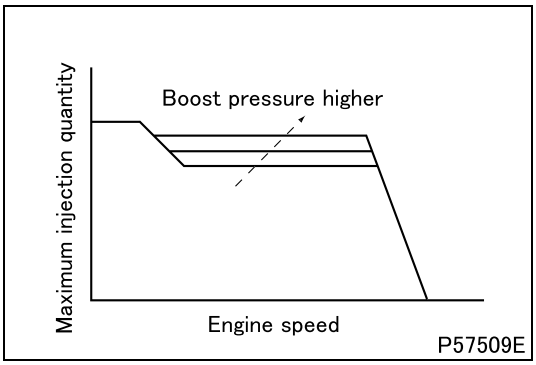

(3) Maximum injection quantity

- The maximum injection quantity is calculated from the engine speed and boost pressure.

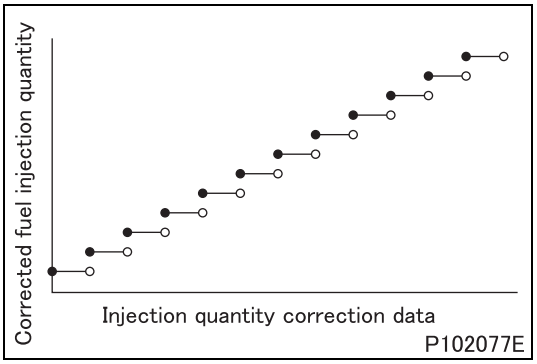

(4) Injection quantity correction

- Injection quantity correction is performed to restrain fluctuations in fuel injection quantity.
- Injection quantity correction data are stored in the engine electronic control unit.
- The storage of injection quantity correction data is effected by the coding function of the Multi-Use Tester.

2.4 Fuel injection timing control

(1) Main injection timing

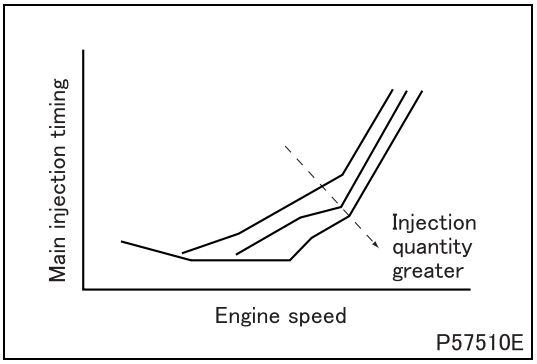

- The main injection timing is calculated from the fuel injection quantity and engine speed.

(2) Pilot injection timing (pilot interval)

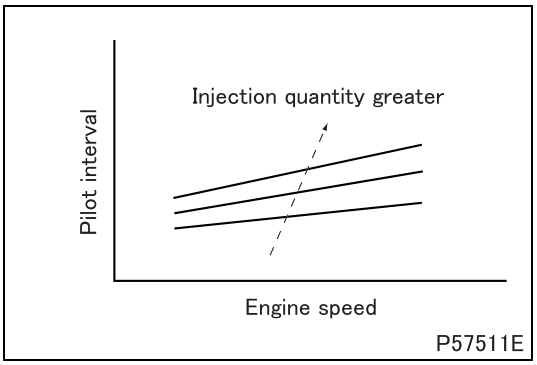

- The pilot interval is calculated from the fuel injection quantity and engine speed.

2.5 Fuel injection pressure control

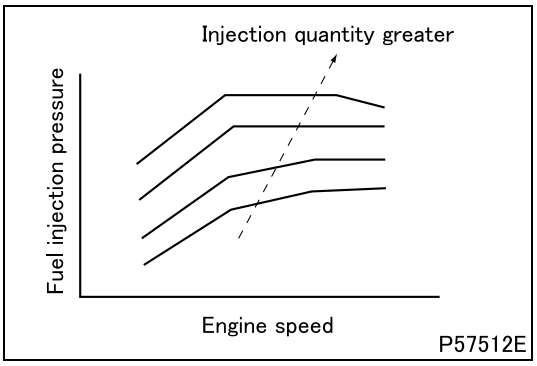

- The fuel injection pressure is calculated from the fuel injection quantity and engine speed.

2.6 Fuel injection control for DPF regeneration

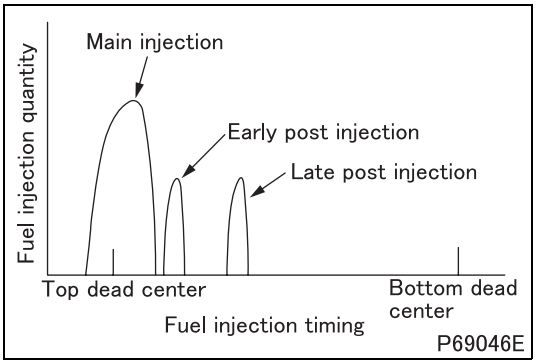

- Fuel injection control for diesel particular filter regeneration is performed in such a way, with early post injection and late post injection added after conventional fuel injection (main injection), exhaust gas temperature is increased to burn out particulate matter (PM) collected in the DPF.

2.7 Auxiliary brake function

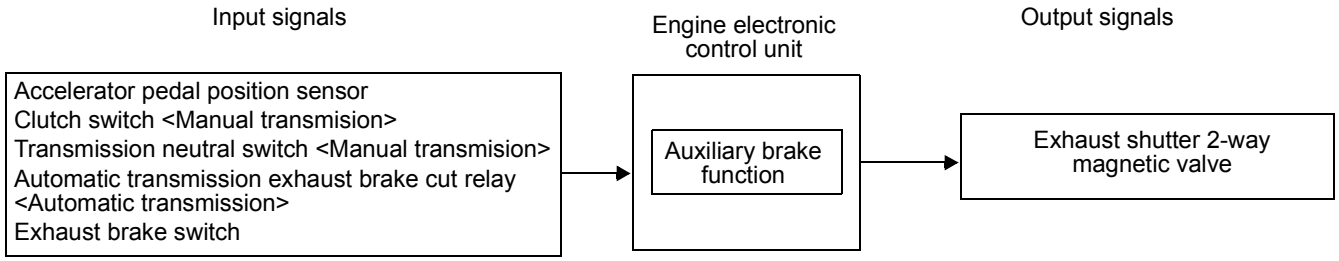

- The auxiliary brake function activates or deactivates the exhaust shutter 2-way magnetic valve according to the vehicle condition to control the exhaust brake.

2.8 Idle-up function

- The idle-up function increases the engine idling speed when a load is applied to the engine by other system (such as air conditioner, PTO) or when the warm-up acceleration function and DPF regeneration are activated.

2.9 Alteration of electronic control unit data (coding function)

- Vehicle information and equipment specifications are registered in each engine electronic control unit as coded data (coding data).
- When an engine electronic control unit or some equipment is replaced, it is necessary to alter registered related data or register new related data using a Multi-Use Tester (for details, see REGISTRATION AND ALTERATION OF DATA IN ENGINE ELECTRONIC CONTROL UNIT).
- For data alteration/registration and data write operation, contact your nearest MITSUBISHI FUSO dealer or MITSUBISHI FUSO TRUCK OF AMERICA, Inc.

2.10 Resetting the diesel particulate filter related information (resetting electronic control unit)

- In the diesel particulate filter regeneration control system, the engine electronic control unit accumulates various information to control the diesel particulate filter regeneration as diesel particulate filter history.
- These accumulated data are automatically initialized by the engine electronic control unit at diesel particulate filter cleaning for regeneration. In the case where the diesel particulate filter regeneration involved the replacement of ceramic filter, etc., however, the initialization of accumulated data is impossible and therefore it is necessary to reset diesel particulate filter related information (the electronic control unit) using a Multi-Use Tester. (for reset procedure, see Gr15.)
- It is necessary to reset diesel particulate filter related information (the electronic control unit) after the following operations are performed.
  - Replacement of diesel particulate filter ceramic filter
  - Cleaning of diesel particulate filter ceramic filter

2.11 Diagnostic function

(1) Overview

- The system continuously monitors the sensors and other system components. If any fault is detected, the system warns the driver of this by displaying the relevant fault information on the meter cluster. At the same time, the system also stores a relevant fault code in the memory and starts operation in the fault mode.
- When control is performed during a failure, the system function is limited to ensure the safety of the vehicle and driver.

(2) Reading fault code

- It is possible to read memorized fault codes using a scanning tool (Multi-Use Tester or General Scanning Tool) or from the number of flashes of the warning lamp in the meter cluster.
- Diagnosis codes shown by the scanning tool (Multi-Use Tester or General Scanning Tool) and those indicated by the flashing of the warning lamp (flash codes) are different.
- Diagnosis codes shown by the scanning tool are more specific than flash codes.

(3) Erasing of fault code

- Control status during fault is back to normal with the fault location serviced. Although it depends on fault code, the warning lamp is not extinguished until the driving cycle has been repeated several times.
- The driving cycle means a period of a series of engine operations from engine start with starter switch ON to completion of after-run sequence with the starter switch OFF.

3. Electronic Control Unit Connection Diagram

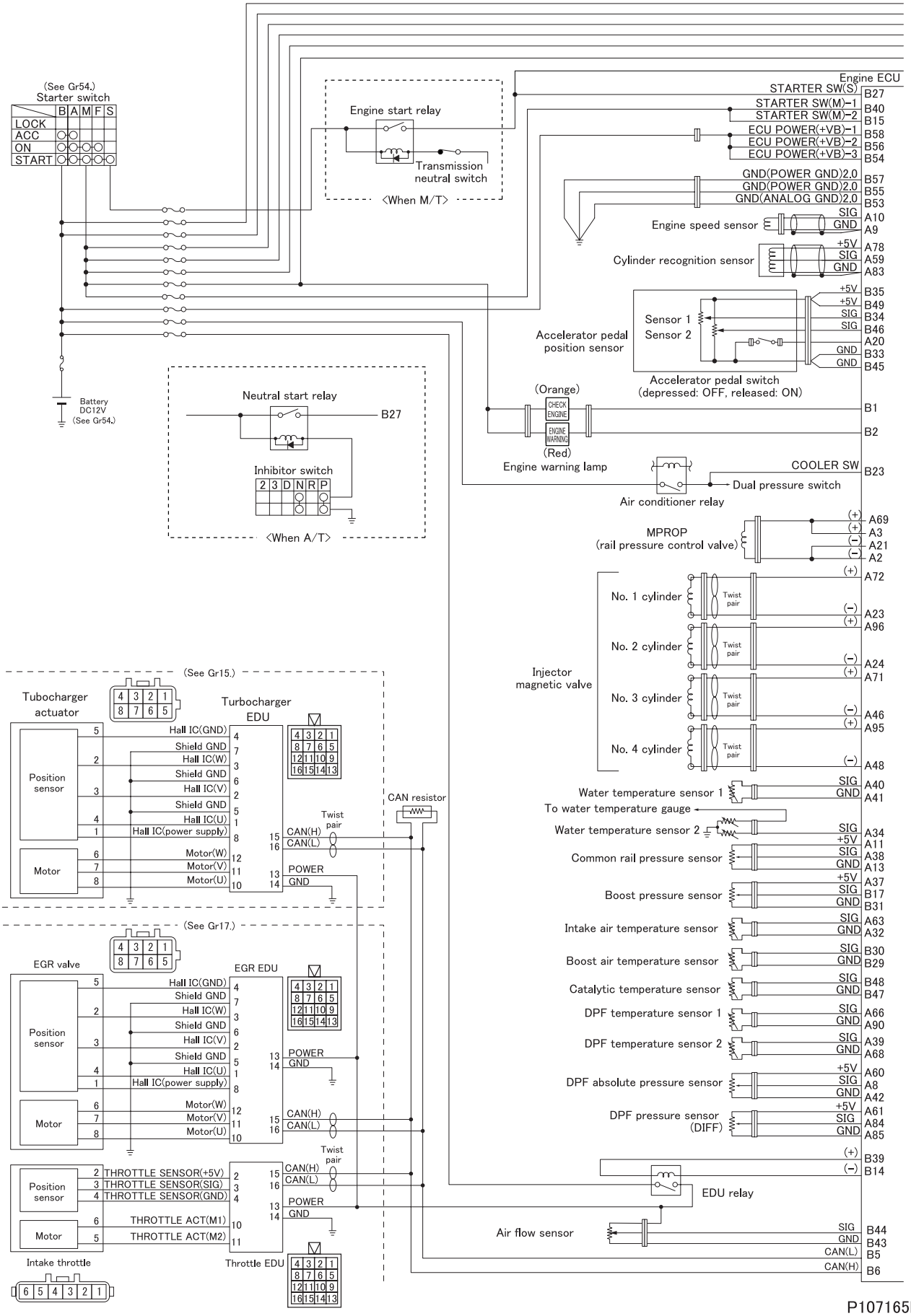

P107165E-1

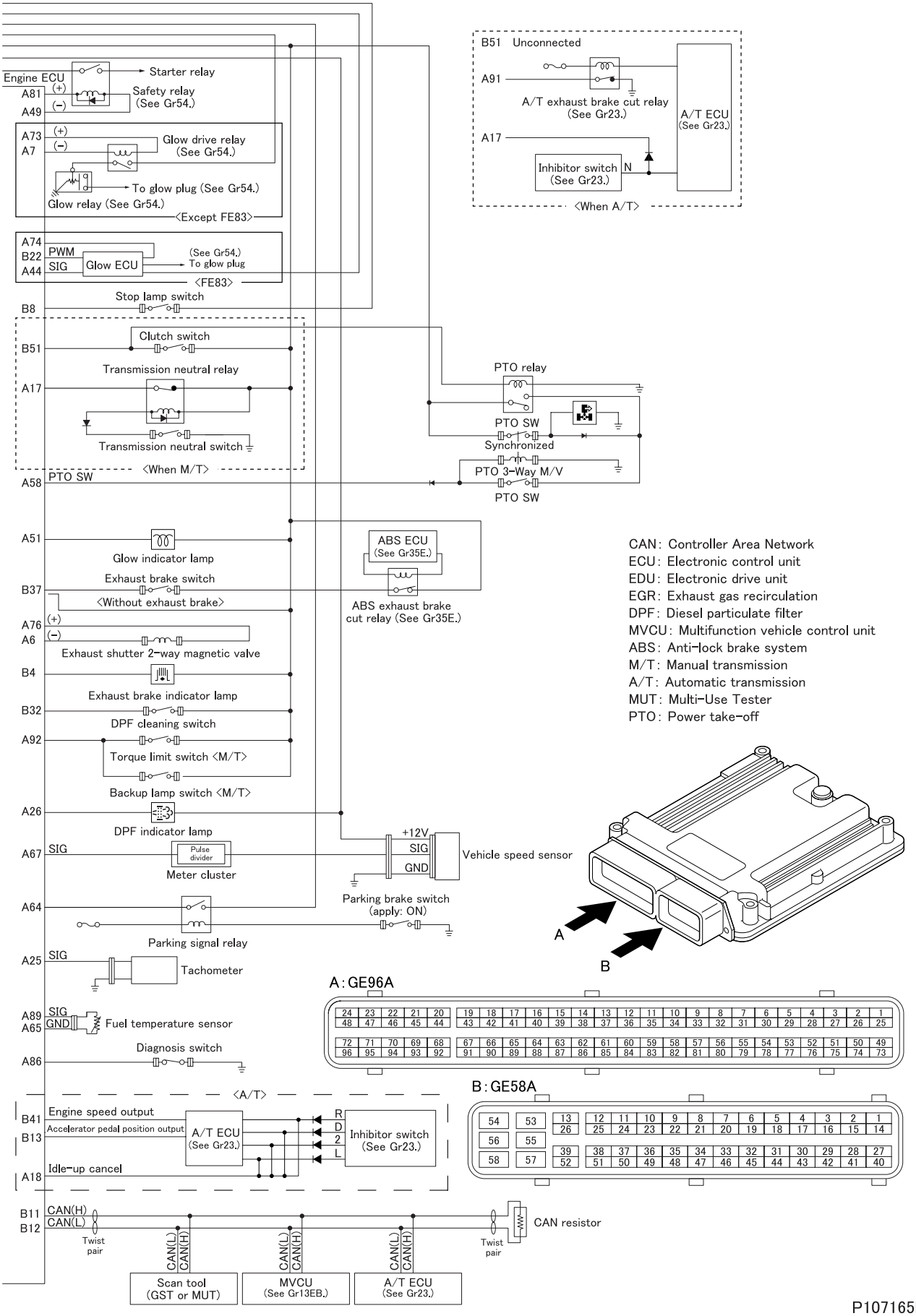
B51 Unconnected
A91
A/T exhaust brake cut relay (See Gr23.)
A/T ECU (See Gr23.)
A17
Inhibitor switch (See Gr23.)
N
<When A/T>
Engine ECU
A81
A49
Starter relay
Safety relay (See Gr54.)
A73
A7
Glow drive relay (See Gr54.)
To glow plug (See Gr54.)
Glow relay (See Gr54.)
<Except FE83>
A74
B22
A44
PWM
SIG
Glow ECU
(See Gr54.)
To glow plug
<FE83>
Stop lamp switch
B8
Clutch switch
B51
Transmission neutral relay
A17
Transmission neutral switch
<When M/T>
PTO SW
A58
PTO relay
PTO SW
Synchronized
PTO 3-Way M/V
PTO SW
A51
Glow indicator lamp
ABS ECU (See Gr35E.)
Exhaust brake switch
B37
<Without exhaust brake>
ABS exhaust brake cut relay (See Gr35E.)
A76
A6
Exhaust shutter 2-way magnetic valve
B4
Exhaust brake indicator lamp
B32
DPF cleaning switch
A92
Torque limit switch <M/T>
Backup lamp switch <M/T>
A26
DPF indicator lamp
A67
SIG
Pulse divider
Meter cluster
+12V
SIG
GND
Vehicle speed sensor
Parking brake switch (apply: ON)
A64
Parking signal relay
A25
SIG
Tachometer
A89
A65
SIG
GND
Fuel temperature sensor
A86
Diagnosis switch
<A/T>
B41
B13
A18
Engine speed output
Accelerator pedal position output
Idle-up cancel
A/T ECU (See Gr23.)
R
D
2
L
Inhibitor switch (See Gr23.)
B11
B12
CAN(H)
CAN(L)
Twist pair
CAN resistor
CAN(L)
CAN(H)
Scan tool (GST or MUT)
MVCU (See Gr13EB.)
A/T ECU (See Gr23.)
CAN: Controller Area Network
ECU: Electronic control unit
EDU: Electronic drive unit
EGR: Exhaust gas recirculation
DPF: Diesel particulate filter
MVCU: Multifunction vehicle control unit
ABS: Anti-lock brake system
M/T: Manual transmission
A/T: Automatic transmission
MUT: Multi-Use Tester
PTO: Power take-off
A
B
A: GE96A
B: GE58A

P107165E-2

1. Diagnosis Procedure

- Perform the inspection in accordance with the following flowchart.

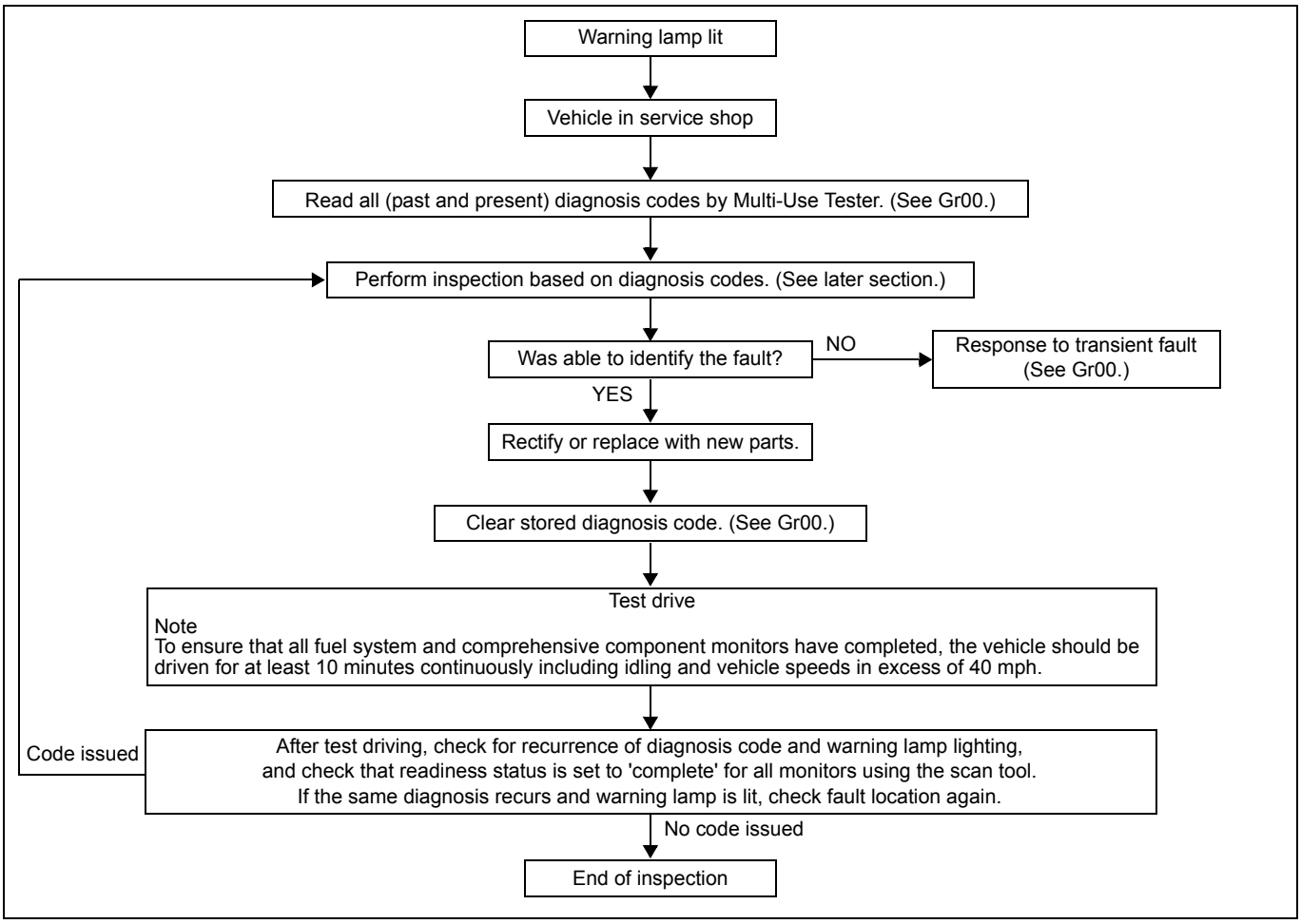

2. Diagnostic Precautions

- Before measuring voltage, check the battery for charged condition and specific gravity. If system inspection is performed with the battery uncharged or reduced in specific gravity, accurate measurements cannot be achieved.
- Before disconnecting battery cables, harnesses and connectors, set the starter switch to LOCK or OFF, then allow at least 20 seconds.
- To avoid having electrical parts damaged, set the starter switch and lighting switch to LOCK or OFF before reconnecting battery cables, harnesses and connectors.
- When performing measurement with the tester, handle the test bar carefully so that it does not damage internal circuit and other electrical parts of the electronic control unit to result in a short-circuit failure between terminals in connector or between connector and car body.
- Resistance is affected by temperature. Determine the necessity of resistance measurement following given temperature specification as a guide. Otherwise, use normal temperature (10 to 35°C {50 to 95°F}) as the measuring condition.
- To start the engine, be sure to connect the connector of the MPROP (rail pressure control valve) to the engine harness. If the engine is started without connecting the MPROP connector, the engine electronic control unit cannot control the supply pump and the fault of the engine may result.
- If the electronic control unit is replaced with a new one, some data must be registered in the new electronic control unit for proper engine control. This also applied to the case when replacing the electronic control unit with the one that has been used in other vehicle. (See “REGISTRATION AND ALTERATION OF DATA IN ENGINE ELECTRONIC CONTROL UNIT”.)

3. Inspections Based on Fault Codes

3.1 Fault code list

- Fault codes can be monitored through the scanning tool (General Scanning Tool or Multi-Use Tester) or the flashing of the warning lamp in the meter cluster.
- There are two kinds of fault codes, i.e., fault code displayed by the General Scanning Tool or Multi-Use Tester and flash code given by the flashing of the warning lamp.
- Scanning tool (General Scanning Tool or Multi-Use Tester) can display diagnosis codes that are more specific than flash codes.
- Diagnosis codes asterisked in the list differ in fault diagnosis period according to the fault diagnosis condition. (For details on fault diagnosis condition, see “Inspection against Each Diagnosis Code”)
- Occurrence of diagnosis codes marked with ■ or ▲ in the list depends on vehicle specification.
  ■: Automatic transmission
  ▲: FE83

Fault code		Monitor	Fault (outline)	Warning		Multi-Use Tester indication	Fault diagnosis period
Diagnosis code	Flash code			Orange	Red		
P0002	63	Failure of MPROP (rail pressure control valve)	MPROP (rail pressure control valve) control saturated	O		Fuel system	IMD
P0003	63	Failure of MPROP (rail pressure control valve)	Low signal range check	O		Fuel system (Low)	IMD
P0004	63	Failure of MPROP (rail pressure control valve)	High signal range check	O		Fuel system (High)	IMD
*P0016	12, 14, 15	Both speed sensor (Engine speed sensor, Cylinder recognition sensor)	• Cam/crank signals present • Gap phase shift	O		Ne SNSR Offset/Backup Mode	IMD
P0045	51	Failure of turbocharger actuator	Circuit	O		VGT Acutuator (Open)	2DC
P0046	51	Failure of turbocharger actuator	Circuit	O		VGT Acutuator (Performance)	2DC
P0047	51	Failure of turbocharger actuator	Circuit	O		VGT Acutuator (Low)	2DC
P0069	19	Characteristic abnormality of atmospheric pressure sensor (built into engine electronic control unit)	Gain and offset drift	O		Boost Press SNSR (Correlation)	2DC
P0087	36	Abnormality of common rail pressure (comparison)	Rail pressure regulator adjustment	O		CRS (Too Low)	IMD
*P0088	23	Abnormality of common rail pressure (pressure: high)	Plausibility	O	O	CRS (Too High)	IMD
P0089	63	Failure of MPROP (rail pressure control valve)	Overload	O		MPROP (Over Load)	IMD
P0090	63	Failure of MPROP (rail pressure control valve)	MPROP (rail pressure control valve) open – circuit	O		MPROP (Open Circuit)	IMD
P0091	63	Failure of MPROP (rail pressure control valve)	MPROP (rail pressure control valve) short circuit	O		MPROP (Low)	IMD
P0092	63	Failure of MPROP (rail pressure control valve)	MPROP (rail pressure control valve) short circuit	O		MPROP (High)	IMD
P0093	22	Abnormality of common rail pressure (fuel leakage)	Fuel leakage		O	CRS (Fuel Leak)	IMD
P0097	9	Failure of boost air temperature sensor	Low signal range check	O		INT Air Temp SNSR2 (Low)	2DC

IMD: Immediate
DC[Drive cycle]: “Start switch ON to start engine till starter switch OFF” constitutes 1 DC.

Fault code		Monitor	Fault (outline)	Warning		Multi-Use Tester indication	Fault diagnosis period
Diagnosis code	Flash code			Orange	Red		
P0098	9	Failure of boost air temperature sensor	High signal range check	O		INT Air Temp SNSR2 (High)	2DC
P0101	17	Characteristic abnormality in air flow sensor	Gain and offset drift	O		Airflow Sensor (Plausibility)	2DC
P0102	17	Failure of air flow sensor	Low signal range check	O		Airflow Sensor (Low)	2DC
P0103	17	Failure of air flow sensor	High signal range check	O		Airflow Sensor (High)	2DC
P0112	44	Failure of intake air temperature sensor	Low signal range check	O		INT Air Temp SNSR (Low)	2DC
P0113	44	Failure of intake air temperature sensor	High signal range check	O		INT Air Temp SNSR (High)	2DC
P0117	21	Failure of water temperature sensor	Low signal range check	O		Water Temp SNSR (Low)	2DC
P0118	21	Failure of water temperature sensor	High signal range check	O		Water Temp SNSR (High)	2DC
P011A	21	Characteristic abnormality of water temperature sensor	Gain drift	O		Water Temp SNSR	2DC
P0122	24	Failure of accelerator pedal position sensor 1	Low signal range check	O		Accel Pedal Sensor 1	IMD
P0123	24	Failure of accelerator pedal position sensor 1	High signal range check	O		Accel Pedal Sensor 1	IMD
▲P0127	27	Abnormality of intercooler	Intercooler failure	O		Intake Air Temperature Too High	2DC
▲P0128	5	Failure of thermostat	Below regulating temperature	O		Coolant Thermostat	2DC
P0148	22	Abnormality of common rail pressure (pressure: low)	Plausibility		O	CRS (Fuel Delivery)	IMD
P0182	41	Failure of fuel temperature sensor	Low signal range check			Fuel Temp Sensor (inlet) Low	IMD
P0183	41	Failure of fuel temperature sensor	High signal range check			Fuel Temp Sensor (inlet) High	IMD
P0191	11	Characteristic abnormality of common rail pressure sensor	Offset ▲Gain drift	O		CRS Pressure SNSR (Plausibility)	IMD
P0192	11	Failure of common rail pressure sensor	Low signal range check	O		CRS Pressure SNSR (Low)	IMD
P0193	11	Failure of common rail pressure sensor	High signal range check	O		CRS Pressure SNSR (High)	IMD
P0201	37	Failure of injector magnetic valve (No. 1 cylinder)	Injector open circuit (No. 1 cylinder)	O		Injector M/V-Cylinder 1 (Load)	IMD
P0202	8	Failure of injector magnetic valve (No. 2 cylinder)	Injector open circuit (No. 2 cylinder)	O		Injector M/V-Cylinder 2 (Load)	IMD
P0203	38	Failure of injector magnetic valve (No. 3 cylinder)	Injector open circuit (No. 3 cylinder)	O		Injector M/V-Cylinder 3 (Load)	IMD
P0204	39	Failure of injector magnetic valve (No. 4 cylinder)	Injector open circuit (No. 4 cylinder)	O		Injector M/V-Cylinder 4 (Load)	IMD
P0219	7	Abnormality of engine speed	High signal range check		O	Engine Overrunning	IMD
P0222	16	Failure of accelerator pedal position sensor 2	Low signal range check	O		Accel Pedal Sensor 2	IMD

IMD: Immediate

DC[Drive cycle]: “Start switch ON to start engine till starter switch OFF” constitutes 1 DC.

Fault code		Monitor	Fault (outline)	Warning		Multi-Use Tester indication	Fault diagnosis period
Diagnosis code	Flash code			Orange	Red		
P0223	16	Failure of accelerator pedal position sensor 2	High signal range check	O		Accel Pedal Sensor 2	IMD
P0226	28	Failure of intake throttle	• Signal range check • Ref voltage	O		Throttle Valve Position	2DC
*P0234	32, 54	Overboost	Overboost	O	O	Over Boost	2DC IMD
P0236	32	Characteristic abnormality of boost pressure sensor	• Offset and gain drift (High) • Offset and gain drift (Low)	O		Boost Press SNSR (Plausi)	2DC
P0237	32	Failure of boost pressure sensor	Low signal range check	O		Boost Press SNSR (Low)	2DC
P0238	32	Failure of boost pressure sensor	High signal range check	O		Boost Press SNSR (High)	2DC
P0251	36	Valve opening of common rail safety valve (DBV)	Common rail pressure (maximum)		O	Common Rail Pressure Defect	IMD
P0253	22	Rail pressure is abnormal (to low) during opening of safety valve (DBV).	Common rail pressure (minimum)		O	Common Rail Pressure Defect	IMD
*P0254	23	Rail pressure is abnormal (to high) during opening of safety valve (DBV).	• Pressure shock • Not open • Common rail pressure (maximum)		O	Common Rail Pressure Defect	IMD
P0261	37	Failure of injector magnetic valve (No. 1 cylinder)	Injector short circuit (No. 1 cylinder)	O		Injector #1-A (Low)	IMD
P0262	37	Failure of injector magnetic valve (No. 1 cylinder)	Injector short circuit (No. 1 cylinder)	O		Injector #1-A (High)	IMD
▲P0263	53	Abnormality in cylinder balance correction	Cylinder balancing out of range	O		Injector #1-A (Plausibility)	2DC
P0264	8	Failure of injector magnetic valve (No. 2 cylinder)	Injector short circuit (No. 2 cylinder)	O		Injector #2-A (Low)	IMD
P0265	8	Failure of injector magnetic valve (No. 2 cylinder)	Injector short circuit (No. 2 cylinder)	O		Injector #2-A (High)	IMD
▲P0266	53	Abnormality in cylinder balance correction	• Cylinder balancing out of range • Sensor signal range check • Ref voltage	O		Injector #2-A (Plausibility)	2DC
P0267	38	Failure of injector magnetic valve (No. 3 cylinder)	Injector short circuit (No. 3 cylinder)	O		Injector #3-A (Low)	IMD
P0268	38	Failure of injector magnetic valve (No. 3 cylinder)	Injector short circuit (No. 3 cylinder)	O		Injector #3-A (High)	IMD
▲P0269	53	Abnormality in cylinder balance correction	Cylinder balancing out of range	O		Injector #3-A (Plausibility)	2DC
P0270	39	Failure of injector magnetic valve (No. 4 cylinder)	Injector short circuit (No. 4 cylinder)	O		Injector #4-A (Low)	IMD
P0271	39	Failure of injector magnetic valve (No. 4 cylinder)	Injector short circuit (No. 4 cylinder)	O		Injector #4-A (High)	IMD
▲P0272	53	Abnormality in cylinder balance correction	Cylinder balancing out of range	O		Injector #4-A (Plausibility)	2DC
▲P0299	32	Underboost	Underboost	O		Turbocharger (Underboost)	2DC
▲P0300	45	Cylinder misfire (multiple cylinders)	Misfire multiple cylinders	O		Multiple Cylinder Misfire	2DC

IMD: Immediate

DC[Drive cycle]: “Start switch ON to start engine till starter switch OFF” constitutes 1 DC.

Fault code		Monitor	Fault (outline)	Warning		Multi-Use Tester indication	Fault diagnosis period
Diagnosis code	Flash code			Orange	Red		
▲P0301	45	Cylinder misfire (individual cylinders)	Misfire individual cylinder 1	O		Cylinder 1 Misfire	2DC
▲P0302	45	Cylinder misfire (individual cylinders)	Misfire individual cylinder 2	O		Cylinder 2 Misfire	2DC
▲P0303	45	Cylinder misfire (individual cylinders)	Misfire individual cylinder 3	O		Cylinder 3 Misfire	2DC
▲P0304	45	Cylinder misfire (individual cylinders)	Misfire individual cylinder 4	O		Cylinder 4 Misfire	2DC
P0335	15	Failure of engine speed sensor	No pulse check	O		Engine Revolution SNSR	IMD
*P0339	15	Failure of engine speed sensor	Abnormality of pulse count	O	O	Engine Revolution SNSR (Plausi)	IMD
P0340	12	Failure of cylinder recognition sensor	No pulse check	O		Camshaft Position SNSR	IMD
P0344	12	Failure of cylinder recognition sensor	Abnormality of pulse count	O		Camshaft Position SNSR (Plausi)	IMD
▲P0381	26	Failure of preheating indicator lamp	• Short circuit battery • Short circuit ground • Open circuit • Overload	O		Glow Lamp	2DC
P0383	26	Failure of preheating control	Short circuit ground	O		Relay for Glow Relay	2DC
P0384	26	Failure of preheating control	Short circuit battery	O		Relay for Glow Relay	2DC
P0401	2	Insufficient air flow rate in exhaust gas recirculation system	• Exhaust gas recirculation system insufficient flow • Exhaust gas recirculation mass flow too low	O		EGR Flow (Insufficient)	2DC
P0402	2	Excessive air flow rate in exhaust gas recirculation system	• Exhaust gas recirculation system excessive flow • Exhaust gas recirculation mass flow too high	O		EGR Flow (Excessive)	2DC
P0403	2, 67	Failure of exhaust gas recirculation system	• Circuit • Plausibility	O		EGR1 (Actuator Circuit)	2DC
P0404	67	Failure of exhaust gas recirculation valve	• Circuit • Open valve	O		EGR System	2DC
P0409	67	Failure of exhaust gas recirculation valve	• Low signal range check • High signal range check	O		EGR1 (Position Sensor)	2DC
P0426	42	Characteristic abnormality of catalytic temperature sensor	Gain and offset drift	O		EXH Gas Temp SNSR1 (Plausibility)	2DC
P0427	42	Failure of catalytic temperature sensor	Low signal range check	O		EXH Gas Temp SNSR1 (Low)	2DC
P0428	42	Failure of catalytic temperature sensor	High signal range check	O		EXH Gas Temp SNSR1 (High)	2DC
P0470	92	Characteristic abnormality of DPF absolute pressure sensor and DPF pressure sensor (DIFF)	• Gain drift • Offset and gain drift	O		DPF Press SNSR (Plausi)	2DC
P0471	98	Failure of DPF absolute pressure sensor	Offset drift	O		DPF Press SNSR (Plausi)	2DC

IMD: Immediate

DC[Drive cycle]: “Start switch ON to start engine till starter switch OFF” constitutes 1 DC.

Fault code		Monitor	Fault (outline)	Warning		Multi-Use Tester indication	Fault diagnosis period
Diagnosis code	Flash code			Orange	Red		
P0472	98	Failure of DPF absolute pressure sensor	Low signal range check	O		DPF Press SNSR (Low)	2DC
P0473	98	Failure of DPF absolute pressure sensor	High signal range check	O		DPF Press SNSR (High)	2DC
▲P0476	93	Failure of exhaust brake	Valve stuck open/shut	O		Exhaust Brake PWR (Performance)	2DC
P0489	67	Failure of exhaust gas recirculation system	Power out of range	O		EGR Power Supply	2DC
P0490	67	Failure of exhaust gas recirculation system	Power out of range	O		EGR Power Supply	2DC
*P0500	25	Failure of vehicle speed sensor	Signal	O	O	Vehicle Speed Sensor	2DC IMD
P0502	25	Failure of vehicle speed sensor	Too low	O		Vehicle Speed Sensor (Low)	2DC
P0503	25	Failure of vehicle speed sensor	Too high	O		Vehicle Speed Sensor (High)	2DC
▲P0506	52	Abnormality in idling control (idling speed is too low)	Idle speed too low	O		Idle Volume	2DC
▲P0507	52	Abnormality in idling control (idling speed is too high)	Idle speed too high	O		Idle Volume	2DC
P0544	87	Characteristic abnormality of DPF temperature sensor 1	Gain and offset drift	O		DPF Temp SNSR (upstream)	2DC
P0545	87	Failure of DPF temperature sensor 1	Low signal range check	O		DPF Temp SNSR (upstream) Low	2DC
P0546	87	Failure of DPF temperature sensor 1	High signal range check	O		DPF Temp SNSR (upstream) High	2DC
*P0562	33	Failure inside engine electronic control unit	Low signal range check	O	O	Power Supply Voltage (Low)	2DC IMD
*P0563	33	Failure inside engine electronic control unit	High signal range check	O	O	Power Supply Voltage (High)	2DC IMD
P0600	64, 76	Abnormality of speed limitation device system	• Controller area network • Message timeout		O	CAN Communication	IMD
P0605	33	Failure inside engine electronic control unit	Electronic controll unit		O	ECU System (Hardware)	IMD
*P0607	33	Failure inside engine electronic control unit	Injector driver circuit	O	O	ECU System	IMD
P060B	33	Failure inside engine electronic control unit	A/D Converter fault	O		A/D Converter	IMD
P0611	47	Injector adjustment data	Electronic controll unit		O	No adjustment data of injector	IMD
P0615	48	Failure of safety relay	Overload		O	Starter Safety Relay (Over Load)	IMD
P0616	48	Failure of safety relay	• Short circuit ground • Open circuit		O	Starter Safety Relay (Low)	IMD
P0617	48	Failure of safety relay	Short circuit battery		O	Starter Safety Relay (High)	IMD

IMD: Immediate

DC[Drive cycle]: “Start switch ON to start engine till starter switch OFF” constitutes 1 DC.

Fault code		Monitor	Fault (outline)	Warning		Multi-Use Tester indication	Fault diagnosis period
Diagnosis code	Flash code			Orange	Red		
P061B	33	Failure inside engine electronic control unit	Plausibility		O	ECU Performance (Calc)	IMD
P061C	33	Failure inside engine electronic control unit	Plausibility		O	ECU Performance (Ne)	IMD
P062D	82	Failure of injector circuit inside engine electronic control unit	Injector driver circuit (No. 1 and 3 cylinders)	O		Injector Bank 1	IMD
P062E	82	Failure of injector circuit inside engine electronic control unit	Injector driver circuit (No. 2 and 4 cylinders)	O		Injector Bank 2	IMD
P0642	81	Sensor power supply abnormal	Low signal range check	O		Sensor Supply Voltage 1 (Low)	IMD
P0643	81	Sensor power supply abnormal	High signal range check	O		Sensor Supply Voltage 1 (High)	IMD
▲P0650	3	Failure of engine warning lamp (orange)	• Short circuit battery • Short circuit ground • Open circuit • Overload	O		MIL	2DC
P0652	81	Sensor power supply abnormail	Low signal range check	O		Sensor Supply Voltage 2 (Low)	IMD
P0653	81	Sensor power supply abnormail	High signal range check	O		Sensor Supply Voltage 2 (High)	IMD
P0657	79	Abnormality of magnetic valve power supply	Short circuit ground		O	M/V Voltage (Low)	IMD
P0670	26	Failure of preheating control system	• Open circuit • Overload • GCU communication error	O		Glow ECU	2DC
▲P0671	26	Failure of preheating control system	No. 1 cylinder fault	O		Glow Plug 1	2DC
▲P0672	26	Failure of preheating control system	No. 2 cylinder fault	O		Glow Plug 2	2DC
▲P0673	26	Failure of preheating control system	No. 3 cylinder fault	O		Glow Plug 3	2DC
▲P0674	26	Failure of preheating control system	No. 4 cylinder fault	O		Glow Plug 4	2DC
▲P0684	26	Failure of preheating control	Overload	O		Glow ECU communication	2DC
P0685	84	Failure of electronic drive unit relay	Open circuit	O		EDU Relay (Open)	2DC
P0686	84	Failure of electronic drive unit relay	Short circuit ground	O		EDU Relay (Low)	2DC
P0687	84	Failure of electronic drive unit relay	Short circuit battery	O		EDU Relay (High)	2DC
P0688	84	Failure of electronic drive unit relay	Overload	O		EDU Relay (Over Load)	2DC
P0698	81	Sensor power supply abnormal	Low signal range check	O		Sensor Supply Voltage 3 (Low)	IMD
P0699	81	Sensor power supply abnormal	High signal range check	O		Sensor Supply Voltage 3 (High)	IMD

IMD: Immediate

DC[Drive cycle]: “Start switch ON to start engine till starter switch OFF” constitutes 1 DC.

Fault code		Monitor	Fault (outline)	Warning		Multi-Use Tester indication	Fault diagnosis period
Diagnosis code	Flash code			Orange	Red		
▲■P0700	71	Failure of automatic transmission control	Fault present in TCM (TCM: Transmission Control Module)	O		Transmission ECU MIL Request	IMD
P1169	56	Characteristic value of air flow sensor	Electronic control unit		O	Abnormal adjustment data of AFS	IMD
P1170	34	Injection quantity adjustment data	Electronic control unit		O	Abnormal adjustment data of Q	IMD
P1410	92	Excessive exhaust pressure	• Low signal range check • High signal range check		O	Exhaust Absolute Pressure (High)	IMD
P1411	88	Diesel particulate filter is overheated.	• Low signal range check • High signal range check • Plausibility		O	Excessive exhaust Temperature	IMD
P1412	92	Temperature increase is insufficient for automatic diesel particulate filter regeneration control	Plausibility			DPF Temp Abnormal1 (Auto)(Low)	IMD
P1413	92	Temperature increase is insufficient for automatic diesel particulate filter regeneration control	Plausibility			DPF Temp Abnormal2 (Auto)(Low)	IMD
P1414	92	Temperature increase is insufficient for automatic diesel particulate filter regeneration control	Plausibility			DPF Temp Abnormal3 (Auto)(High)	IMD
P1415	92	Failure of automatic diesel particulate filter regeneration control	Plausibility			DPF Interval Abnormal (Auto)	IMD
P1416	92	Temperature increase is insufficient for manual diesel particulate filter regeneration control	Plausibility		O	DPF Temp Abnormal1 (Manual)(Low)	IMD
P1417	92	Temperature increase is insufficient for manual diesel particulate filter regeneration control	Plausibility		O	DPF Temp Abnormal2 (Manual)(Low)	IMD
P1418	92	Temperature increase is insufficient for manual diesel particulate filter regeneration control	Plausibility		O	DPF Temp Abnormal3 (Manual)(High)	IMD
P1419	92	Failure of manual diesel particulate filter regeneration control	Plausibility		O	DPF Interval Abnormal (Manual)	IMD
P1421	92	Diesel particulate filter clogged	Plausibility		O	PM accumulation amount level 1	IMD
P1422	92	Diesel particulate filter clogged	Plausibility		O	PM accumulation amount level 2	IMD
P1430	78	Failure of diesel particulate filter cleaning switch	Plausibility			DPF Regeneration Switch	IMD
P1435	92	Diesel particulate filter broken	Efficiency below threshold (blocked diesel particulate filter)	O		Exhaust Relative Pressure (Low)	2DC
P1440	92	For counter recording of diagnosis code P1412, P1413, P1414	Plausibility			DPF Temp Abnormal4 (Auto)	IMD

IMD: Immediate

DC[Drive cycle]: “Start switch ON to start engine till starter switch OFF” constitutes 1 DC.

Fault code		Monitor	Fault (outline)	Warning		Multi-Use Tester indication	Fault diagnosis period
Diagnosis code	Flash code			Orange	Red		
P1441	92	For counter recording of diagnosis code P1416, P1417, P1418	High signal range check			DPF Temp Abnormal4 (Manual)	IMD
P1632	73	Abnormality in controller area network 2 communication	Message timeout	O		CAN (EGR1 Time out)	2DC
P1635	74	Abnormality in controller area network 2 communication	Message timeout	O		CAN (Intake Throttle)	2DC
P1640	75	Abnormality in controller area network 2 communication	Time out	O		CAN Communication (W/G)	2DC
▲P1660	29	Failure of diesel particulate filter indicator lamp	• Short circuit battery • Short circuit ground • Open circuit • Overload	O		DPF Lamp Control Circuit (Low)	IMD
P2002	92	Diesel particulate filter clogged	Efficiency below threshold (leaking diesel particulate filter)	O		DPF MFF	2DC IMD
P2031	88	Characteristic abnormality of DPF temperature sensor 2	Gain and offset drift	O		Exhaust Gas Temp	2DC
P2032	88	Failure of DPF temperature sensor 2	Low signal range check	O		Exhaust Gas Temp (Low)	2DC
P2033	88	Failure of DPF temperature sensor 2	High signal range check	O		Exhaust Gas Temp (High)	2DC
P2080	42	Relative check between catalytic temperature sensor and DPF temperature sensor 1	Gain and offset drift	O		DOC Temp SNSR	2DC
P2084	92	Relative check between DPF temperature sensors (1 and 2)	Gain and offset drift	O		DOC Temp SNSR (Plausibility)	2DC
P2100	28	Failure of intake throttle system	Circuit check	O		TVA (Open)	2DC
P2101	28	Failure of intake throttle system	• Intake throttle valve slow response/steady state position deviation • Circuit check	O		TVA (System)	2DC
P2102	28	Failure of intake throttle system	Circuit check	O		TVA (Short)	2DC
P2108	28	Failure of intake throttle system	Plausibility	O		TVA (Controller)	2DC
P2120	65	Failure of accelerator pedal switch	Plausibility			Acc Switch	IMD
P2135	16, 24, 58	Failure of accelerator pedal position sensors (1 and 2)	Gain and offset drift	O		TVA SNSR (Voltage)	IMD
P2138	58	Failure of accelerator pedal position sensors (1 and 2)	• Low signal range check • High signal range check • Plausibility		O	Acc Sensor Correlation	IMD

IMD: Immediate

DC[Drive cycle]: “Start switch ON to start engine till starter switch OFF” constitutes 1 DC.

Fault code		Monitor	Fault (outline)	Warning		Multi-Use Tester indication	Fault diagnosis period
Diagnosis code	Flash code			Orange	Red		
P2147	82	Injector magnetic valve	Injector short circuit (No. 1 and 3 cylinders)	O		Injector Bank 1 (Low)	IMD
P2148	82	Injector magnetic valve	Injector short circuit (No. 1 and 3 cylinders)	O		Injector Bank 1 (High)	IMD
P2150	82	Injector magnetic valve	Injector short circuit (No. 2 and 4 cylinders)	O		Injector Bank 2 (Low)	IMD
P2151	82	Injector magnetic valve	Injector short circuit (No. 2 and 4 cylinders)	O		Injector Bank 2 (High)	IMD
P2169	93	Failure of exhaust shutter 3-way magnetic valve	Open circuit	O		Exhaust Valve Act (Open)	2DC
P2170	93	Failure of exhaust shutter 3-way magnetic valve	Short circuit ground	O		Exhaust Valve Act (Gnd)	2DC
P2171	93	Failure of exhaust shutter 3-way magnetic valve	Short circuit battery	O		Exhaust Valve Act (Batt)	2DC
P2184	21	Failure of water temperature sensor 2	Low signal range check	O		Water Temp SNSR2 (Low)	2DC
P2185	21	Failure of water temperature sensor 2	High signal range check	O		Water Temp SNSR2 (High)	2DC
▲P2187	52	Abnormality in idling control	Idle fuelling too low	O		Low Idle Speed (Low)	2DC
▲P2188	52	Abnormality in idling control	Idle fuelling too high	O		Low Idle Speed (High)	2DC
P2199	44	Characteristic abnormality of intake air temperature sensor	Gain and offset drift	O		EGR Temp Sensor (Correlation)	2DC
P2228	19	Failure of atmospheric pressure sensor (inside engine electronic control unit)	Low signal range check	O		Atm Press SNSR (Low)	2DC
P2229	19	Failure of atmospheric pressure sensor (inside engine electronic control unit)	High signal range check	O		Atm Press SNSR (High)	2DC
P2263	51	Turbocharger actuator system	• Turbocharger actuator slow response/steady state position deviation • Plausibility • Motor lock	O		VGT System	2DC
P2413	67, 95	Abnormality in exhaust gas recirculation valve position	• Exhaust gas recirculation valve slow response/ steady state position deviation • Plausibility	O		EGR System	2DC
▲P2423	46	Failure of front oxidation catalyst	Inactive (unable to generate exotherm for diesel particulate filter regeneration)	O		Catalyst Efficiency	2DC
*P2453	97	Failure of DPF pressure sensor (DIFF)	• Dynamic check • Offset check	O	O	DPF Diff SNSR (Plausi) & MFF	2DC IMD
P2454	97	Failure of DPF pressure sensor (DIFF)	Low signal range check	O		DPF Diff SNSR (Low) & MFF	2DC

IMD: Immediate

DC[Drive cycle]: “Start switch ON to start engine till starter switch OFF” constitutes 1 DC.

Fault code		Monitor	Fault (outline)	Warning		Multi-Use Tester indication	Fault diagnosis period
Diagnosis code	Flash code			Orange	Red		
P2455	97	Failure of DPF pressure sensor (DIFF)	High signal range check	O		DPF Diff SNSR (High) & MFF	2DC
▲P2457	2	Failure of exhaust gas recirculation cooler	Exhaust gas recirculation cooler failure	O		EGR Cooler Performance	2DC
▲P2459	92	Frequent diesel particulate filter regeneration	Excessive diesel particulate filter regeneration frequency (diesel particulate filter clogged up)	O		DPF Regeneration Frequency	2 Regen
P2533	66	Failure of starter switch	Open circuit at electronic control unit inout	O		Starter SW	2DC
P253C	61	Failure of auxiliary equipment sensor	Low signal range check			PTO Acc (Low)	IMD
P253D	61	Failure of auxiliary equipment sensor	High signal range check			PTO Acc (High)	IMD
P2563	51	Turbocharger actuator system	• Low signal range check • High signal range check	O		Boost Pressure Actuator	2DC
P2670	36	Abnormality of common rail pressure (comparison)	Short circuit ground		O	MPROP Voltage (Low)	IMD
U0001	73	Abnormality in controller area network 2 communication	Message timeout	O		High Speed CAN Communication	2DC
U0002	73	Abnormality in controller area network 2 communication	Controller area network B bus off	O		High Speed CAN Communication	2DC
U0028	72	Abnormality in controller area network 1 communication	Message timeout	O		Vehicle Communication Bus A	2DC
U0029	76	Abnormality in controller area network 1 communication	Controller area network A bus off	O		Vehicle Communication Bus Off	2DC
▲*U0101	76	Abnormality in controller area network (automatic transmission) communication	Engine warning lamp (orange) request message timeout	O		CAN (A/T ECU)	2DC IMD

IMD: Immediate

Regen: Regeneration

DC[Drive cycle]: “Start switch ON to start engine till starter switch OFF” constitutes 1 DC.

[Fault code]
Diagnosis code: P0002/Flash code: 63
[Monitor]
Failure of MPROP (rail pressure control valve)
[Fault (outline)]
MPROP (rail pressure control valve) control saturated
[Diagnosis check]
- MPROP (rail pressure control valve) signal conversion (analog/digital) function in the engine electronic control unit is monitored for fault.

[Code generation condition]
- Signal remains unconverted for 1 second.
  (Warning lamp is lit and diagnosis code is displayed on first establishment of code generation condition.)

[Diagnosis check timing]
- Fault diagnosis is continuously performed during the driving cycle.

[Diagnostic requirement]
–

[Control effected by electronic control unit during fault]
- MPROP (rail pressure control valve) control is stopped.
- Misfire detection is stopped.
- Diesel particulate filter regeneration is stopped.
- Related fault check is stopped.

[Probable cause of trouble]
- Malfunction of electronic control unit (replacement of engine electronic control unit)

[Recoverability]
- Recovered if signal becomes normal when starter switch is turned OFF to ON (power supply resumed to electronic control unit).
  (Warning lamp is extinguished and diagnosis code is cleared at fourth display of diagnosis code after recovery.)

[Fault code]
Diagnosis code: P0003/Flash code: 63
[Monitor]
Failure of MPROP (rail pressure control valve)
[Fault (outline)]
Low signal range check
[Diagnosis check]
- MPROP (rail pressure control valve) is monitored for fault.

[Code generation condition]
- MPROP (rail pressure control valve) voltage exceeds 4 V.
  (Warning lamp is lit and diagnosis code is displayed on first establishment of code generation condition.)

[Diagnosis check timing]
- Fault diagnosis is continuously performed during the driving cycle.

[Diagnostic requirement]
–

[Control effected by electronic control unit during fault]
- MPROP (rail pressure control valve) control is stopped.
- Misfire detection is stopped.
- Diesel particulate filter regeneration is stopped.
- Related fault check is stopped.

[Probable cause of trouble]
- Open-circuit of harness between electronic control unit and MPROP (rail pressure control valve)
- Malfunction of each connector
- Malfunction of MPROP (rail pressure control valve)
- Malfunction of electronic control unit

[Recoverability]
- Recovered if signal becomes normal when starter switch is turned OFF to ON (power supply resumed to electronic control unit).
  (Warning lamp is extinguished and diagnosis code is cleared at fourth display of diagnosis code after recovery.)

[Electronic Control Unit Connection Diagram]

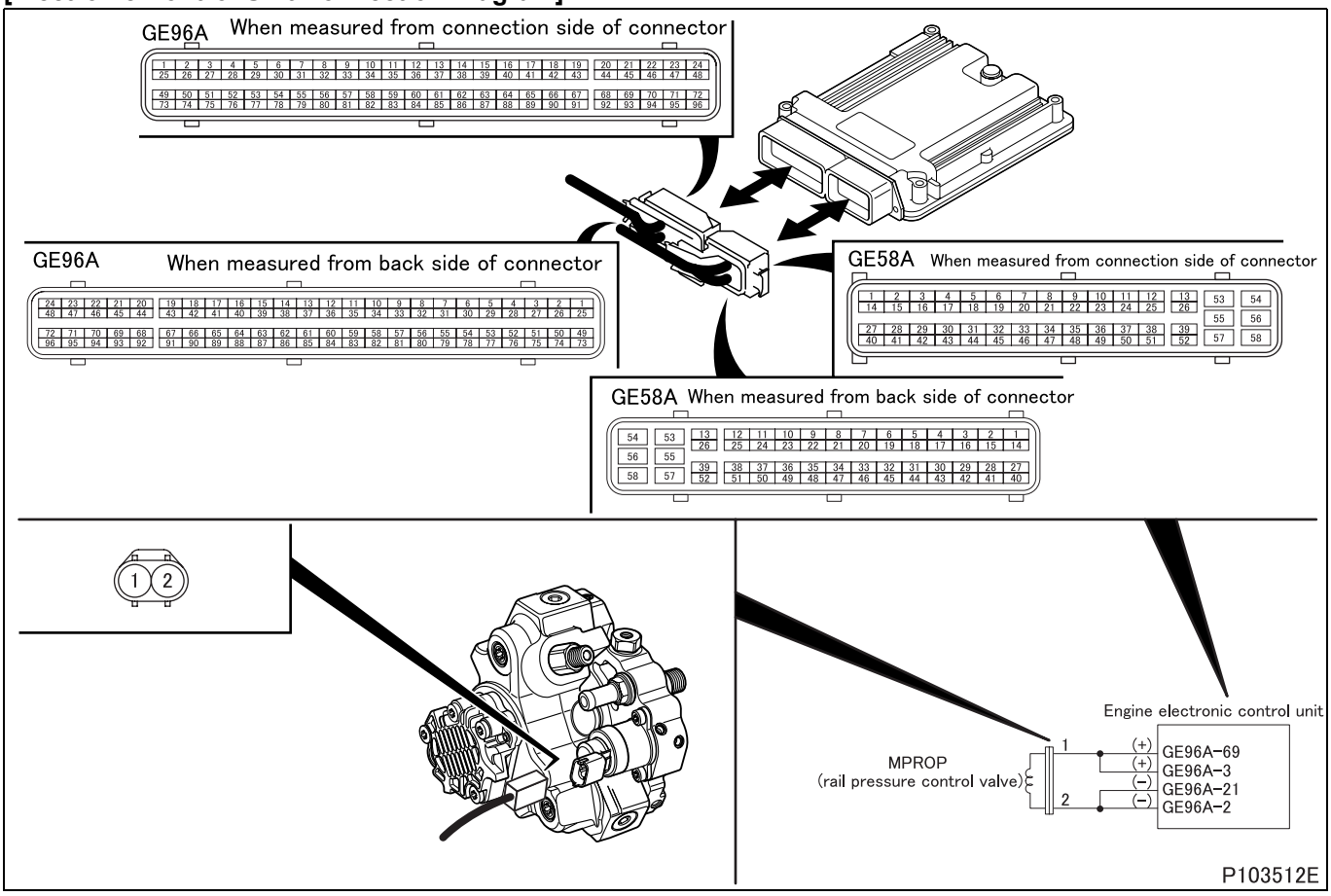

[Parts Identification and Location]

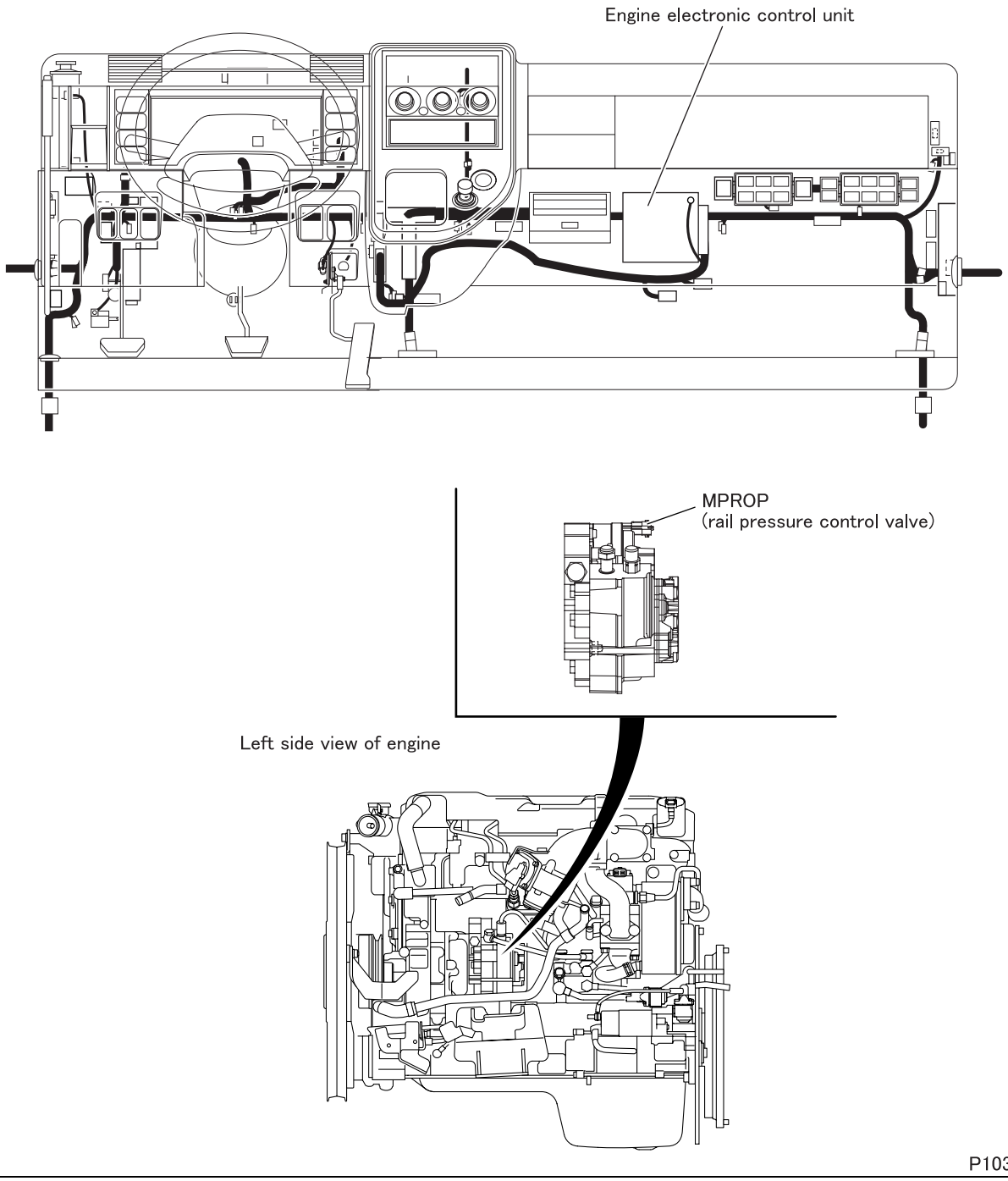

[Fault diagnosis]

- Perform checks in the sequence of the following steps.

Step 1	Inspection items		Inspection by electronic control unit connector
	Maintenance item		Measure value of resistance between connector (GE96A) terminal No. 3 or No. 69 and No. 2 or No. 21.
	Inspection condition		Disconnect electronic control unit and harness, and measure from connection side of harness connector.
	Requirements		2.6 to 3.15 Ω
	Inspection result (Is the judging standard satisfied?)	YES	Go to transient fault (See Gr00.).
		NO	Go to step 2.

Step 2	Inspection items		Inspection of electronic control unit connector
	Maintenance item		Inspection of connector
	Inspection condition		–
	Requirements		• Connector is properly connected. • No trace of water entry is found. • No corrosion is found in terminal. • Connection to terminal is appropriate.
	Inspection result (Is the judging standard satisfied?)	YES	Go to step 3.
		NO	Modify connector.

Step 3	Inspection items		Inspection of MPROP (rail pressure control valve) connector
	Maintenance item		Inspection of connector
	Inspection condition		–
	Requirements		• Connector is properly connected. • No trace of water entry is found. • No corrosion is found in terminal. • Connection to terminal is appropriate.
	Inspection result (Is the judging standard satisfied?)	YES	Replacement of supply pump
		NO	Modify connector.

[Fault code]
Diagnosis code: P0004/Flash code: 63
[Monitor]
Failure of MPROP (rail pressure control valve)
[Fault (outline)]
High signal range check
[Diagnosis check]
- MPROP (rail pressure control valve) is monitored for fault.

[Code generation condition]
- MPROP (rail pressure control valve) voltage remains below 0 V for 1 second.
  (Warning lamp is lit and diagnosis code is displayed on first establishment of code generation condition.)

[Diagnosis check timing]
- Fault diagnosis is continuously performed during the driving cycle.

[Diagnostic requirement]
–

[Control effected by electronic control unit during fault]
- MPROP (rail pressure control valve) control is stopped.
- Misfire detection is stopped.
- Diesel particulate filter regeneration is stopped.
- Related fault check is stopped.

[Probable cause of trouble]
- Short-circuit harness between electronic control unit and MPROP (rail pressure control valve)
- Malfunction of each connector
- Malfunction of MPROP (rail pressure control valve)
- Malfunction of electronic control unit

[Recoverability]
- Recovered if signal becomes normal when starter switch is turned OFF to ON (power supply resumed to electronic control unit).
  (Warning lamp is extinguished and diagnosis code is cleared at fourth display of diagnosis code after recovery.)

[Electronic Control Unit Connection Diagram]

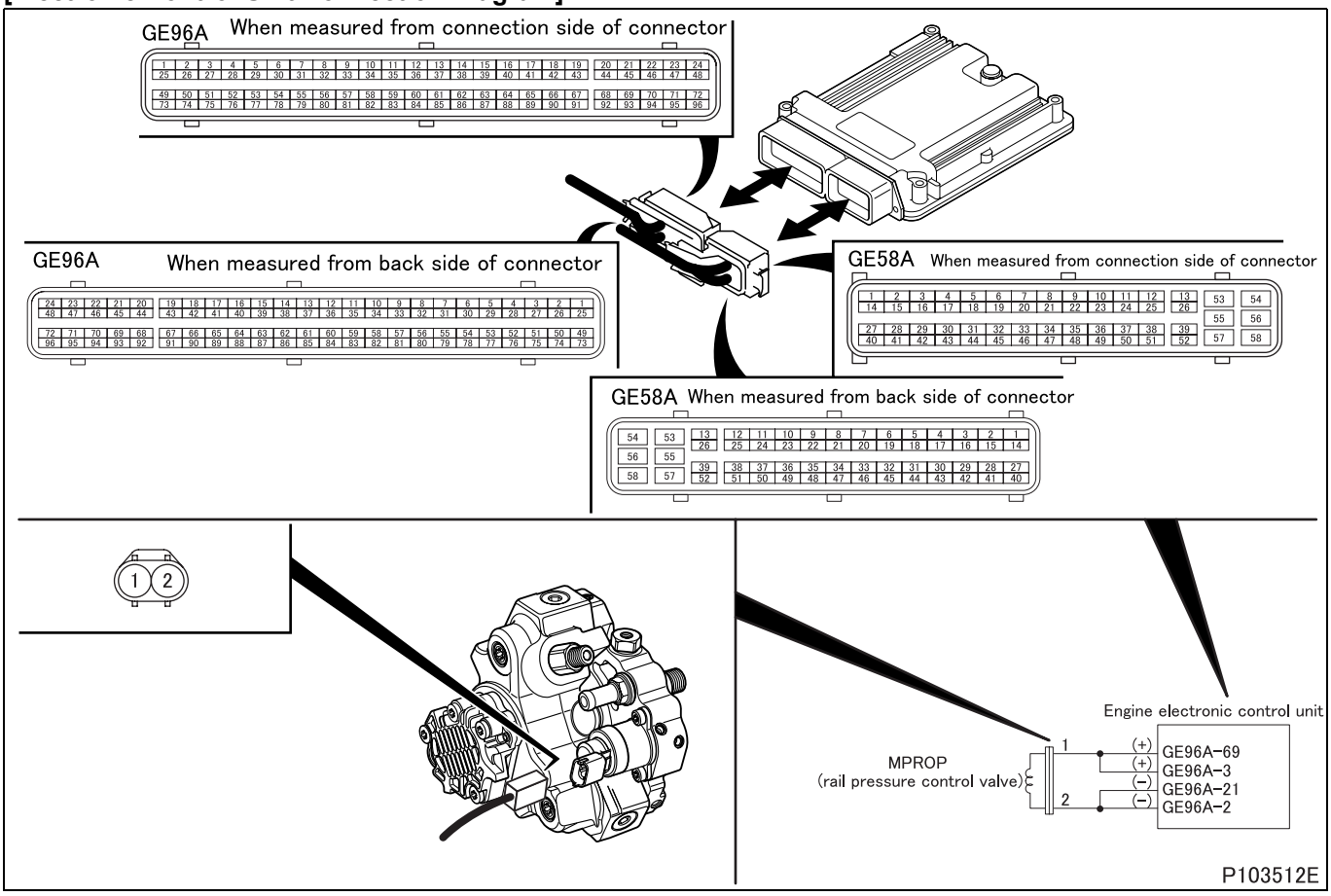

[Parts Identification and Location]

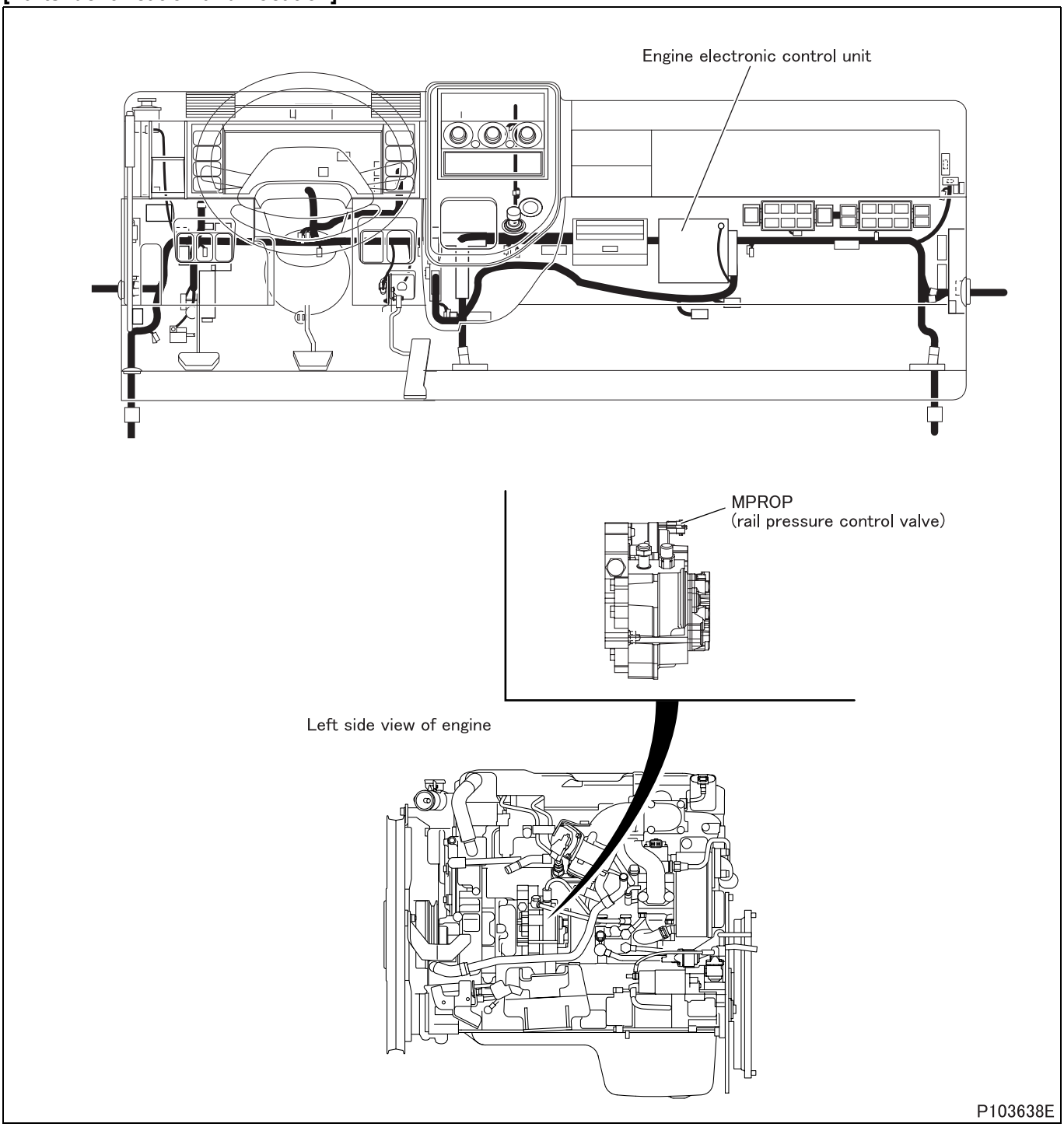

[Fault diagnosis]

- Perform checks in the sequence of the following steps.

Step 1	Inspection items		Inspection by electronic control unit connector
	Maintenance item		Measure value of resistance between connector (GE96A) terminal No. 3 or No. 69 and No. 2 or No. 21.
	Inspection condition		Disconnect electronic control unit and harness, and measure from connection side of harness connector.
	Requirements		2.6 to 3.15 Ω
	Inspection result (Is the judging standard satisfied?)	YES	Go to transient fault (See Gr00.).
		NO	Go to step 2.

Step 2	Inspection items		Inspection of electronic control unit connector
	Maintenance item		Inspection of connector
	Inspection condition		–
	Requirements		• Connector is properly connected. • No trace of water entry is found. • No corrosion is found in terminal. • Connection to terminal is appropriate.
	Inspection result (Is the judging standard satisfied?)	YES	Go to step 3.
		NO	Modify connector.

Step 3	Inspection items		Inspection of MPROP (rail pressure control valve) connector
	Maintenance item		Inspection of connector
	Inspection condition		–
	Requirements		• Connector is properly connected. • No trace of water entry is found. • No corrosion is found in terminal. • Connection to terminal is appropriate.
	Inspection result (Is the judging standard satisfied?)	YES	Replacement of supply pump
		NO	Modify connector.

[Fault code]
Diagnosis code: P0016/Flash code: 12, 14, 15
[Monitor]
Both speed sensor (Engine speed sensor, Cylinder recognition sensor)
[Fault (outline)]
- Cam/crank signals present
- Gap phase shift

[Diagnosis check]
- Output signals of engine speed sensor and cylinder recognition sensor at engine start are compared for abnormality.

[Code generation condition]
Diagnosis code is generated under either of the following conditions.
<Condition (1)>
- Input signals from engine speed sensor and cylinder recognition sensor remain unreceived for more than 6 consecutive seconds.
  (Warning lamp is lit and diagnosis code is displayed on first establishment of code generation condition.)

<Condition (2)>
- Signals from engine speed sensor and cylinder recognition sensor differ by more than 12 pulses.
  (Warning lamp is lit and diagnosis code is displayed on first establishment of code generation.)

<Condition (3)>
- Backup control of cylinder recognition sensor is started due to failure of engine speed sensor.
  (Diagnosis code is displayed on first establishment of code generation condition.)

[Diagnosis check timing]
- Fault diagnosis is performed only once during the driving cycle.

[Diagnostic requirement]
<Condition (1)>
- Engine operating mode: starting
- Safety relay: OFF

<Condition (2)>
- Starter switch: ON
- Engine speed: more than 20 rpm

<Condition (3)>
- Engine speed sensor: faulty

[Control effected by electronic control unit during fault]
- Electronic control unit differs in the way of control by the diagnosis check item.

<Condition (1)>
- Engine stopped

<Condition (2)>
- Misfire detection is stopped.
- Related fault check is stopped.

<Condition (3)>
- Engine torque is limited.
- Auto cruise control stopped
- Related fault check is stopped.

[Probable cause of trouble]
- Open-circuit or short-circuit of harness between electronic control unit and sensor
- Malfunction of each connector
- Malfunction of engine speed sensor
- Malfunction of cylinder recognition sensor
- Malfunction of electronic control unit

[Recoverability]

- Recovered if signal becomes normal when starter switch is turned OFF to ON (power supply resumed to electronic control unit).
  (Timing of warning lamp/diagnosis code OFF depends on condition.)

<Condition (1)>

- Lamp is extinguished and code is cleared at fourth diagnosis code display after recovery.

<Condition (2)>

- Lamp is extinguished and code is cleared at fourth diagnosis code display after recovery.

<Condition (3)>

- Diagnosis code is cleared simultaneously with recovery.

[Electronic Control Unit Connection Diagram]

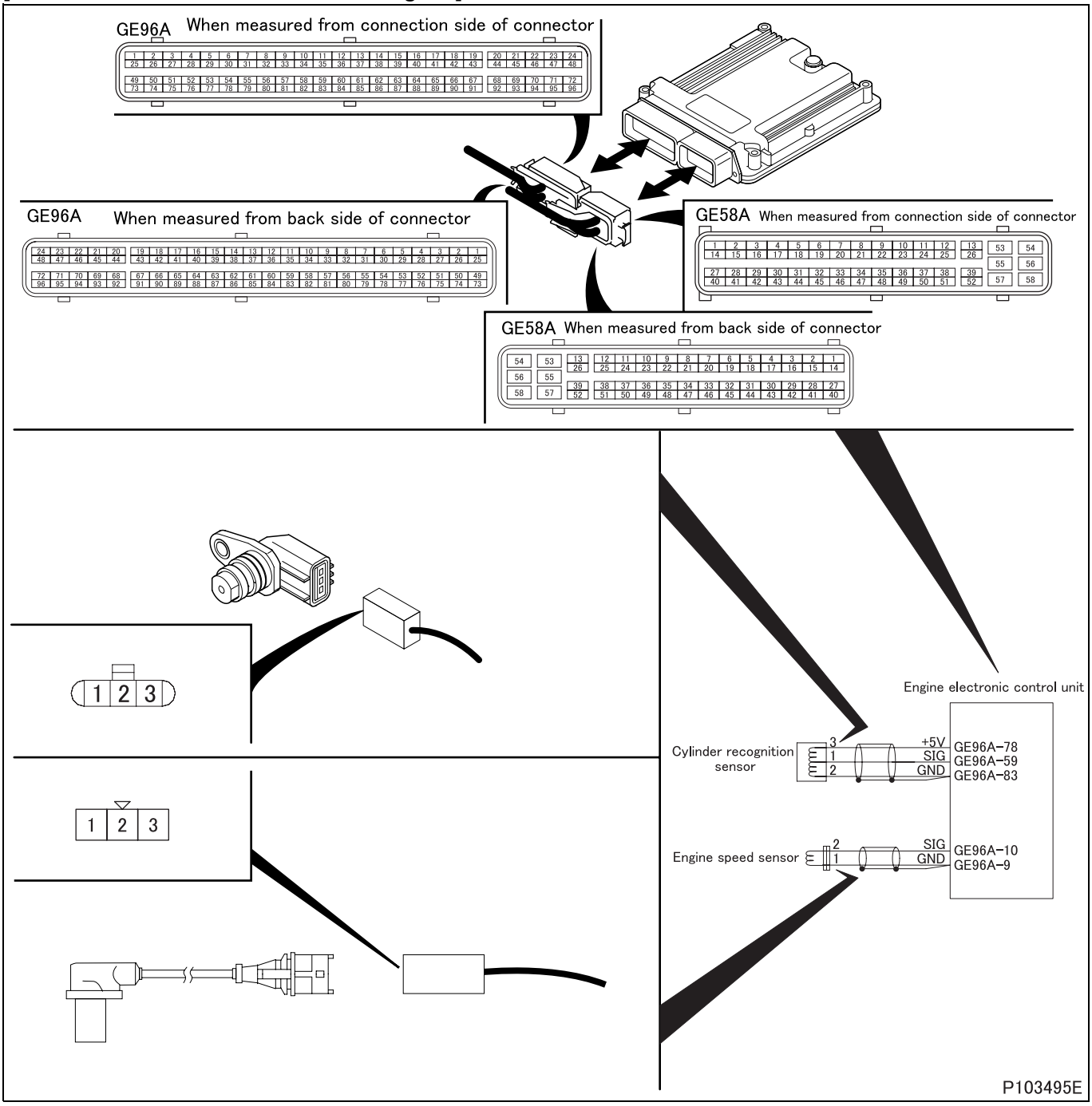

[Parts Identification and Location]

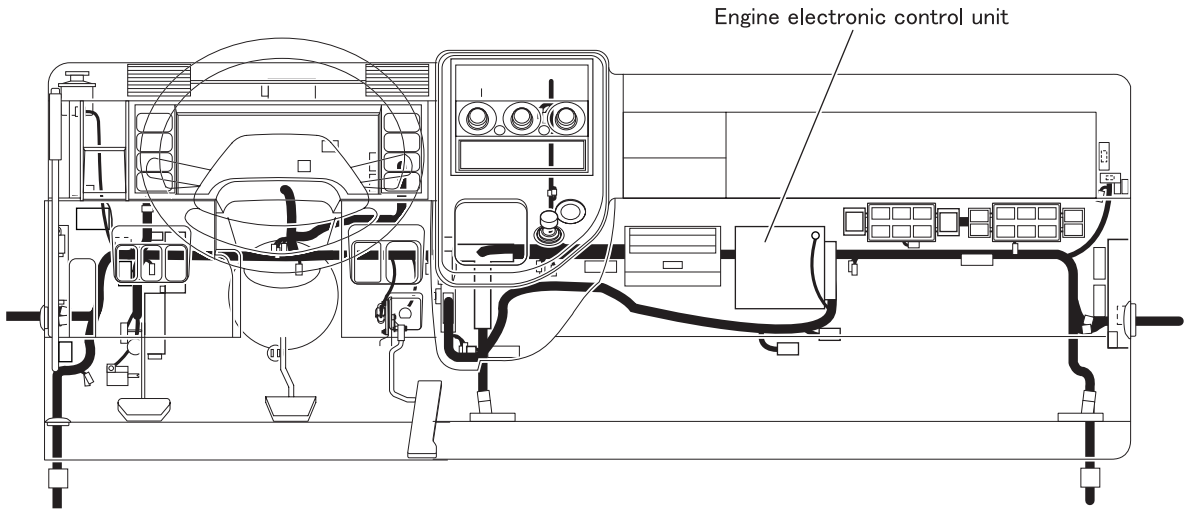

Upper view of engine

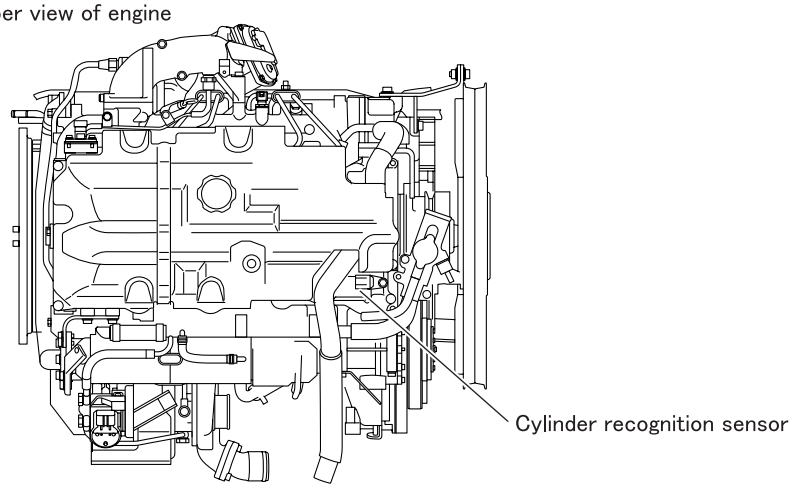

Left side view of transmission

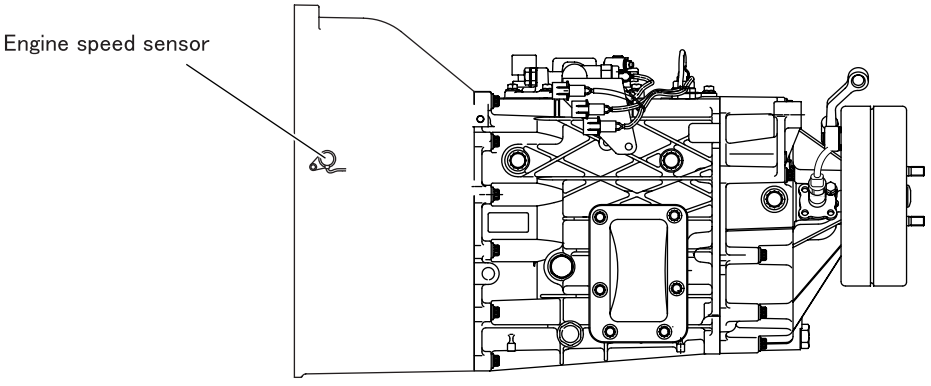

P103623E

[Fault diagnosis]

- Perform checks in the sequence of the following steps.

Step 1	Inspection items		Inspection by control data
	Maintenance item		**<General Scanning Tool used>** • Measure item “Ne”. **<Multi-Use Tester used>** • Measure item No. 01 “Engine Revolution” of Service Data.
	Inspection condition		–
	Requirements		Same indication as tachometer is given.
	Inspection result (Is the judging standard satisfied?)	YES	Go to transient fault (See Gr00.).
		NO	Go to step 2.

Step 2	Inspection items		Inspection by electronic control unit connector (engine speed sensor)
	Maintenance item		Measure value of resistance between connector (GE96A) terminal No. 9 and 10.
	Inspection condition		Disconnect electronic control unit and harness, and measure from connection side of harness connector.
	Requirements		860 ± 86 Ω
	Inspection result (Is the judging standard satisfied?)	YES	Go to step 7.
		NO	Go to step 3.

Step 3	Inspection items		Inspection of engine speed sensor connector
	Maintenance item		Inspection of connector
	Inspection condition		–
	Requirements		• Connector is properly connected. • No trace of water entry is found. • No corrosion is found in terminal. • Connection to terminal is appropriate.
	Inspection result (Is the judging standard satisfied?)	YES	Go to step 4.
		NO	Modify connector.

Step 4	Inspection items		Inspection of engine speed sensor unit
	Maintenance item		Measure value of resistance between connector terminal No. 1 and 2.
	Inspection condition		–
	Requirements		860 ± 86 Ω
	Inspection result (Is the judging standard satisfied?)	YES	Go to step 5.
		NO	Replacement of sensor

<Step 4 inspection diagram>

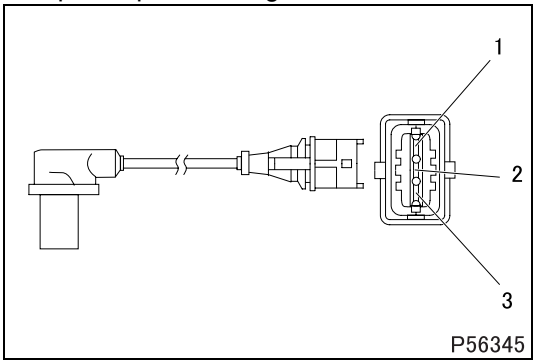

Step 5	Inspection items		Inspection of harness between electronic control unit and engine speed sensor (power supply)
	Maintenance item		Check circuit between sensor connector terminal No. 2 and electronic control unit connector (GE96A) terminal No. 10
	Inspection condition		Disconnect each device from harness and measure from connection side of harness connector.
	Requirements		There is continuity.
	Inspection result (Is the judging standard satisfied?)	YES	Go to step 6.
		NO	Modify harness.

Step 6	Inspection items		Inspection of harness between electronic control unit and engine speed sensor (ground)
	Maintenance item		Check circuit between sensor connector terminal No. 1 and electronic control unit connector (GE96A) terminal No. 9
	Inspection condition		Disconnect each device from harness and measure from connection side of harness connector.
	Requirements		There is continuity.
	Inspection result (Is the judging standard satisfied?)	YES	Go to step 7.
		NO	Modify harness.

Step 7	Inspection items		Inspection by electronic control unit connector (signal) (cylinder recognition sensor)
	Maintenance item		Measure value of voltage between connector (GE96A) terminal No. 59 (+) and 83 (–).
	Inspection condition		• Measure from back side of harness connector with each device connected to harness. • Starter switch: ON
	Requirements		1 V or more
	Inspection result (Is the judging standard satisfied?)	YES	Go to step 10.
		NO	Go to step 8.

Step 8	Inspection items		Inspection by electronic control unit connector (power supply) (cylinder recognition sensor)
	Maintenance item		Measure value of voltage between connector (GE96A) terminal No. 78 (+) and 83 (–).
	Inspection condition		• Measure from back side of harness connector with each device connected to harness. • Starter switch: ON
	Requirements		5 V
	Inspection result (Is the judging standard satisfied?)	YES	Go to step 9.
		NO	Go to step 10.

Step 9	Inspection items		Inspection by electronic control unit connector (ground) (cylinder recognition sensor)
	Maintenance item		Measure value of voltage between connector (GE96A) terminal No. 83 (+) and (GE58A) 53 (–).
	Inspection condition		• Measure from back side of harness connector with each device connected to harness. • Starter switch: ON
	Requirements		0 V
	Inspection result (Is the judging standard satisfied?)	YES	Go to step 11.
		NO	Go to step 10.

Step 10	Inspection items		Inspection of electronic control unit connector
	Maintenance item		Inspection of connector
	Inspection condition		–
	Requirements		• Connector is properly connected. • No trace of water entry is found. • No corrosion is found in terminal. • Connection to terminal is appropriate.
	Inspection result (Is the judging standard satisfied?)	YES	Go to step 17.
		NO	Modify connector.

Step 11	Inspection items		Inspection of cylinder recognition sensor connector
	Maintenance item		Inspection of connector
	Inspection condition		–
	Requirements		• Connector is properly connected. • No trace of water entry is found. • No corrosion is found in terminal. • Connection to terminal is appropriate.
	Inspection result (Is the judging standard satisfied?)	YES	Go to step 12.
		NO	Modify connector.

Step 12	Inspection items		Inspection of cylinder recognition sensor unit
	Maintenance item		Measure value of resistance between connector terminal No. 2 and 3.
	Inspection condition		–
	Requirements		200 to 1800 Ω
	Inspection result (Is the judging standard satisfied?)	YES	Go to step 13.
		NO	Replacement of sensor

<Step 12 inspection diagram>

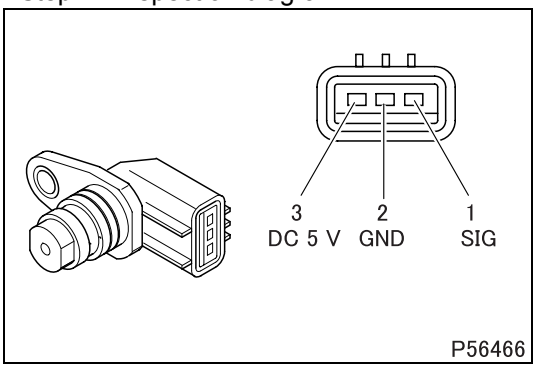

Step 13	Inspection items		Inspection of harness between electronic control unit and cylinder recognition sensor (power supply)
	Maintenance item		Measure value of voltage between sensor connector terminal No. 3 (+) and 2 (–).
	Inspection condition		• Remove connector and measure from harness side. • Starter switch: ON
	Requirements		5 V
	Inspection result (Is the judging standard satisfied?)	YES	Go to step 15.
		NO	Go to step 14.

Step 14	Inspection items		Inspection of harness between electronic control unit and cylinder recognition sensor (power supply)
	Maintenance item		Check circuit between sensor connector terminal No. 3 and electronic control unit connector (GE96A) terminal No. 78
	Inspection condition		Disconnect each device from harness and measure from connection side of harness connector.
	Requirements		There is continuity.
	Inspection result (Is the judging standard satisfied?)	YES	Go to step 17.
		NO	Modify harness.

Step 15	Inspection items		Inspection of harness between electronic control unit and cylinder recognition sensor (ground)
	Maintenance item		Check circuit between sensor connector terminal No. 2 and electronic control unit connector (GE96A) terminal No. 83
	Inspection condition		Disconnect each device from harness and measure from connection side of harness connector.
	Requirements		There is continuity.
	Inspection result (Is the judging standard satisfied?)	YES	Go to step 16.
		NO	Modify harness.

Step 16	Inspection items		Inspection of harness between electronic control unit and cylinder recognition sensor (signal)
	Maintenance item		Check circuit between sensor connector terminal No. 1 and electronic control unit connector (GE96A) terminal No. 59
	Inspection condition		Disconnect each device from harness and measure from connection side of harness connector.
	Requirements		There is continuity.
	Inspection result (Is the judging standard satisfied?)	YES	Go to step 17.
		NO	Modify harness.

Step 17	Inspection items		Inspection by control data
	Maintenance item		**<General Scanning Tool used>** • Measure item “Ne”. **<Multi-Use Tester used>** • Measure item No. 01 “Engine Revolution” of Service Data.
	Inspection condition		–
	Requirements		Same indication as tachometer is given.
	Inspection result (Is the judging standard satisfied?)	YES	Go to transient fault (See Gr00.).
		NO	Replacement of electronic control unit

[Fault code]
Diagnosis code: P0045/Flash code: 51
[Monitor]
Failure of turbocharger actuator
[Fault (outline)]
Circuit
[Diagnosis check]
- Turbocharger electronic drive unit monitors built-in motor of turbocharger actuator for circuit fault and sends fault information to engine electronic control unit through controller area network communication.
- Monitoring by turbocharger electronic drive unit is performed from initial operational status of motor at starter switch ON.

[Code generation condition]
- Actuator motor circuit remains open as detected by electronic drive unit for 2 seconds.
  (Warning lamp is lit and diagnosis code is displayed on third establishment of code generation condition.)

[Diagnosis check timing]
- Fault diagnosis is continuously performed during the driving cycle.

[Diagnostic requirement]
- Controller area network communication in order

[Control effected by electronic control unit during fault]
- Exhaust gas recirculation control is stopped.
- Throttle controls disabled
- Diesel particulate filter regeneration is stopped.
- Related fault check is stopped.

[Probable cause of trouble]
- Open-circuit or short-circuit of harness between electronic drive unit and turbocharger actuator
- Malfunction of each connector
- Malfunction of turbocharger motor (built in turbocharger actuator)
- Malfunction of turbocharger position sensor (built in turbocharger actuator)
- Malfunction of electronic drive unit
- Malfunction of electronic drive unit relay

[Recoverability]
- Recovered if signal becomes normal when starter switch is turned OFF to ON (power supply resumed to electronic control unit).
  (Warning lamp is extinguished and diagnosis code is cleared at fourth display of diagnosis code after recovery.)

[Electronic Control Unit Connection Diagram]

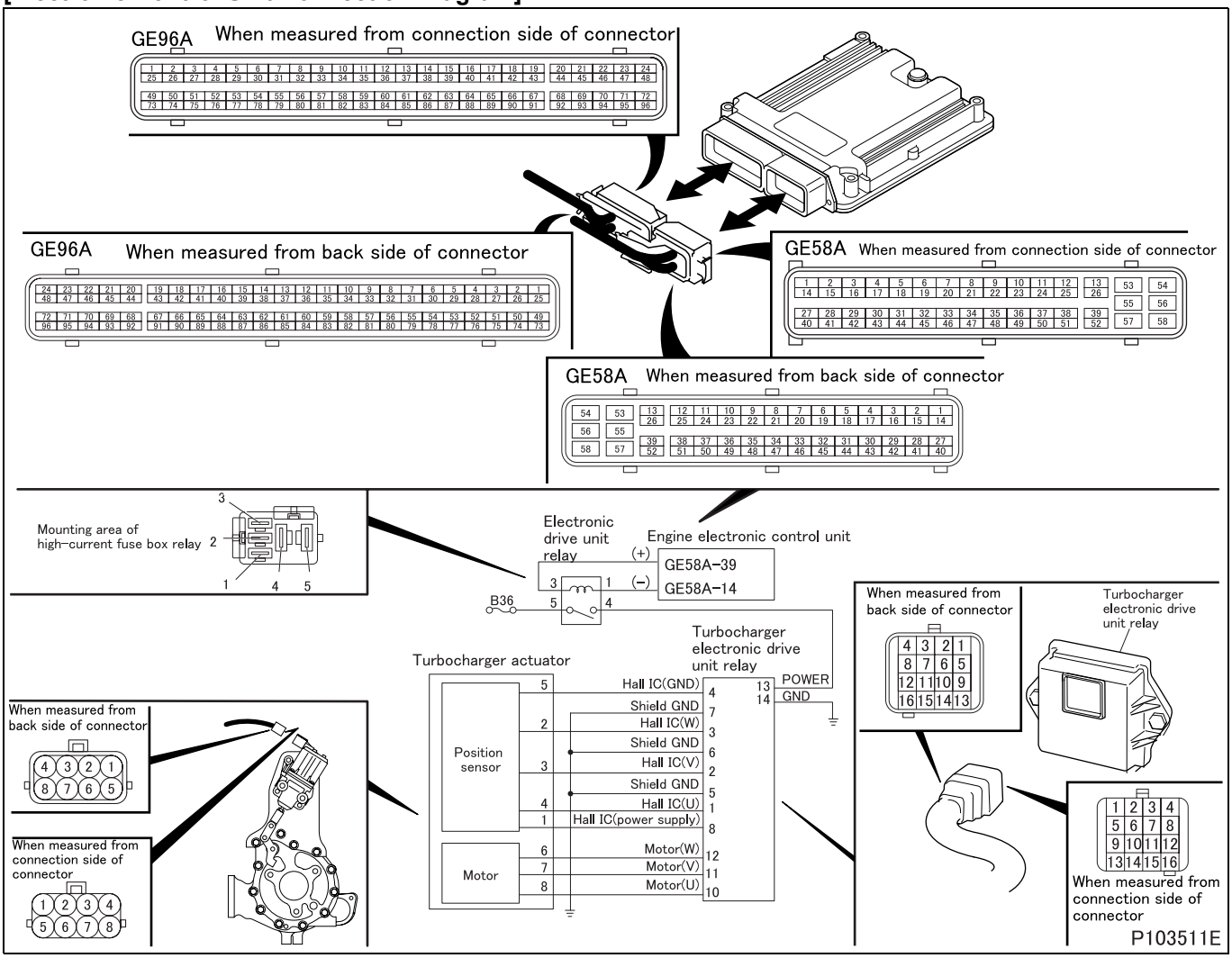

[Parts Identification and Location]

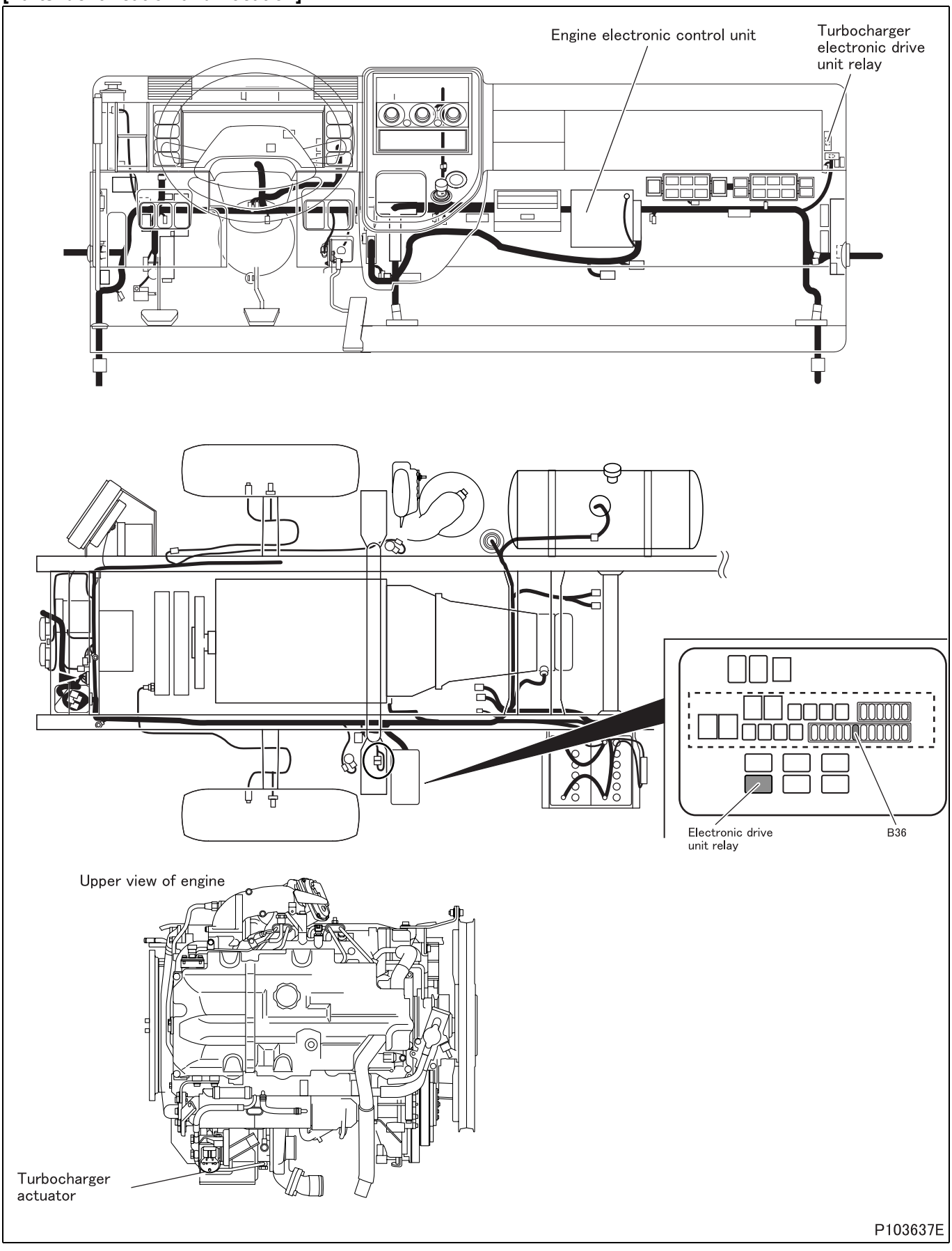

[Fault diagnosis]

- Perform checks in the sequence of the following steps.

Step 1	Inspection items		Inspection by control data
	Maintenance item		Perform actuator test item No. A4 “VGT 1”
	Inspection condition		• Vehicle: stationary (vehicle speed 0 km/h {0 MPH}) • Starter switch: ON (engine started) • Transmission: neutral (parking satisfactory for automatic transmission) • Diagnosis switch: OFF (fuse removed)
	Requirements		Actual position matches with target value set by Multi-Use Tester. (check with service data “54: Target VGT Position, 55: Actual VGT Position”) **NOTE** • **Set turbocharger opening to the range of 20 to 80%.** • **As initial operational check of turbocharger actuator is automatically effected immediately after starter switch is ON, perform actuator test by Multi-Use Tester after that check (approximately 5 seconds later).**
	Inspection result (Is the judging standard satisfied?)	YES	Go to transient fault (See Gr00.).
		NO	Go to step 2.

Step 2	Inspection items		Inspection of electronic drive unit connector
	Maintenance item		Inspection of connector
	Inspection condition		–
	Requirements		• Connector is properly connected. • No trace of water entry is found. • No corrosion is found in terminal. • Connection to terminal is appropriate.
	Inspection result (Is the judging standard satisfied?)	YES	Go to step 3.
		NO	Modify connector.

Step 3	Inspection items		Inspection of turbocharger actuator connector
	Maintenance item		Inspection of connector
	Inspection condition		–
	Requirements		• Connector is properly connected. • No trace of water entry is found. • No corrosion is found in terminal. • Connection to terminal is appropriate.
	Inspection result (Is the judging standard satisfied?)	YES	Go to step 4.
		NO	Modify connector.

Step 4	Inspection items		Inspection by control data
	Maintenance item		Check if following diagnosis codes occur simultaneously. • P0685 “EDU Relay (Open)” • P0686 “EDU Relay (Low)” • P0687 “EDU Relay (High)”
	Inspection condition		Starter switch: ON
	Requirements		No codes occur.
	Inspection result (Is the judging standard satisfied?)	YES	Go to step 5.
		NO	Inspect diagnosis code that is occurring.

Step 5	Inspection items		Inspection of electronic drive unit connector (power supply)
	Maintenance item		Measure value of voltage between connector terminal No. 13 (+) and 14 (–).
	Inspection condition		• Remove connector and measure from harness side. • Starter switch: ON • Perform actuator test item No. AF “EDU Relay”
	Requirements		Same as battery voltage.
	Inspection result (Is the judging standard satisfied?)	YES	Go to step 10.
		NO	Go to step 6.

Step 6	Inspection items		Inspection of relay connector
	Maintenance item		Inspection of connector
	Inspection condition		–
	Requirements		• Connector is properly connected. • No trace of water entry is found. • No corrosion is found in terminal. • Connection to terminal is appropriate.
	Inspection result (Is the judging standard satisfied?)	YES	Go to step 7.
		NO	Modify connector.

Step 7	Inspection items		Inspection of harness between fuse and relay
	Maintenance item		Check circuit between fuse No. B35 and relay connector terminal No. 5
	Inspection condition		Disconnect each device from harness and measure from connection side of harness connector.
	Requirements		There is continuity.
	Inspection result (Is the judging standard satisfied?)	YES	Go to step 8.
		NO	Modify harness.

Step 8	Inspection items		Inspection of harness between relay and electronic drive unit
	Maintenance item		Check circuit between relay connector terminal No. 4 and electronic drive unit connector terminal No. 13
	Inspection condition		Disconnect each device from harness and measure from connection side of harness connector.
	Requirements		There is continuity.
	Inspection result (Is the judging standard satisfied?)	YES	After replacement of electronic drive unit relay, go to step 9
		NO	Modify harness.

Step 9	Inspection items		Inspection of harness between electronic drive unit and ground
	Maintenance item		Check circuit between following electronic drive unit connector terminals • Electronic drive unit ground: terminal No. 14 - chassis ground • Sensor shield ground (U): terminal No. 5 - 14 • Sensor shield ground (V): terminal No. 6 - 14 • Sensor shield ground (W): terminal No. 7 - 14 • Sensor ground: terminal No. 4 - 14
	Inspection condition		Disconnect each device from harness and measure from connection side of harness connector.
	Requirements		There is continuity.
	Inspection result (Is the judging standard satisfied?)	YES	Go to step 10.
		NO	Modify harness.

Step 10	Inspection items		Inspection of electronic drive unit connector (motor)
	Maintenance item		Measure value of resistance between following connector terminals. • Between U - V: 10 - 11 • Between U - W: 10 - 12 • Between V - W: 11 - 12
	Inspection condition		–
	Requirements		2.1 ± 0.3 Ω
	Inspection result (Is the judging standard satisfied?)	YES	Go to step 13.
		NO	Go to step 11.

Step 11	Inspection items		Inspection of harness between electronic drive unit and turbocharger actuator (motor)
	Maintenance item		Check circuit between following connector terminals. • Motor (U): electronic drive unit connector terminal No. 10 - turbocharger actuator connector terminal No. 8 • Motor (V): electronic drive unit connector terminal No. 11 - turbocharger actuator connector terminal No. 7 • Motor (W): electronic drive unit connector terminal No. 12 - turbocharger actuator connector terminal No. 6
	Inspection condition		Disconnect each device from harness and measure from connection side of harness connector.
	Requirements		There is continuity.
	Inspection result (Is the judging standard satisfied?)	YES	Go to step 12.
		NO	Modify harness.

Step 12	Inspection items		Inspection of turbocharger actuator unit (motor)
	Maintenance item		Measure value of resistance between following turbocharger actuator connector terminals • Between U - V: 8 - 7 • Between U - W: 8 - 6 • Between V - W: 7 - 6
	Inspection condition		Keep turbocharger actuator installed on vehicle. Remove harness connector, and measure turbocharger actuator side.
	Requirements		2.1 ± 0.3 Ω
	Inspection result (Is the judging standard satisfied?)	YES	Go to step 13.
		NO	Replacement of turbocharger actuator.

<Step 12 inspection diagram>

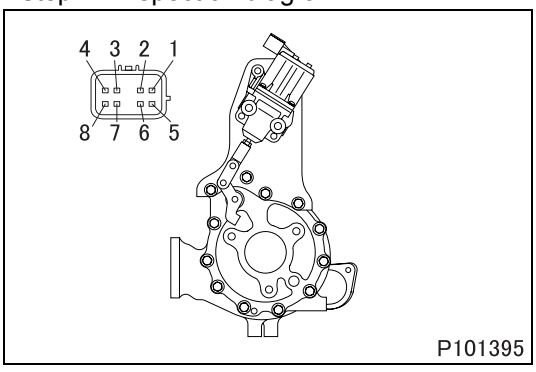

Step 13	Inspection items		Inspection of turbocharger actuator connector (position sensor: power supply)
	Maintenance item		Measure value of voltage between connector terminal No. 1 (+) and 5 (–).
	Inspection condition		• Measure from back side of connector of harness with each device connected to harness. • Starter switch: ON
	Requirements		10 V
	Inspection result (Is the judging standard satisfied?)	YES	Go to step 14.
		NO	Go to step 15.

Step 14	Inspection items		Inspection of electronic drive unit connector (position sensor: signal)
	Maintenance item		Measure value of voltage between following electronic drive unit connector terminals • U signal output: terminal 1 (+) - 4 (–) • V signal output: terminal 2 (+) - 4 (–) • W signal output: terminal 3 (+) - 4 (–)
	Inspection condition		• Measure from back side of connector of harness with each device connected to harness. • Starter switch: ON • Perform actuator test item No. A4 “VGT 1”
	Requirements		8 to 11 V
	Inspection result (Is the judging standard satisfied?)	YES	Go to step 16.
		NO	Go to step 15.

Step 15	Inspection items		Inspection of harness between electronic drive unit and turbocharger actuator (position sensor)
	Maintenance item		Check circuit between following connector terminals. • Sensor (power supply): electronic drive unit connector terminal No. 8 - turbocharger actuator connector terminal No. 1 • Sensor (U): electronic drive unit connector terminal No. 1 - turbocharger actuator connector terminal No. 4 • Sensor (V): electronic drive unit connector terminal No. 2 - turbocharger actuator connector terminal No. 3 • Sensor (W): electronic drive unit connector terminal No. 3 - turbocharger actuator connector terminal No. 2 • Sensor (ground): electronic drive unit connector terminal No. 4 - turbocharger actuator connector terminal No. 5
	Inspection condition		Disconnect each device from harness and measure from connection side of harness connector.
	Requirements		There is continuity.
	Inspection result (Is the judging standard satisfied?)	YES	After replacement of turbocharger, go to step 16
		NO	Modify harness.

Step 16	Inspection items		Inspection by control data
	Maintenance item		Perform actuator test item No. A4 “VGT 1”
	Inspection condition		• Vehicle: stationary (vehicle speed 0 km/h {0 MPH}) • Starter switch: ON (engine started) • Transmission: neutral (parking satisfactory for automatic transmission) • Diagnosis switch: OFF (fuse removed)
	Requirements		Actual position matches with target value set by Multi-Use Tester. (check with service data “54: Target VGT Position, 55: Actual VGT Position”) **NOTE** • **Set turbocharger opening to the range of 20 to 80%.** • **As initial operational check of turbocharger actuator is automatically effected immediately after starter switch is ON, perform actuator test by Multi-Use Tester after that check (approximately 5 seconds later).**
	Inspection result (Is the judging standard satisfied?)	YES	Go to transient fault (See Gr00.).
		NO	Replacement of electronic drive unit

[Fault code]
Diagnosis code: P0046/Flash code: 51
[Monitor]
Failure of turbocharger actuator
[Fault (outline)]
Circuit
[Diagnosis check]
- Turbocharger electronic control drive monitors built-in motor of turbocharger actuator for sticking of parts and sends fault information to engine electronic control unit through controller area network communication.
- Turbocharger electronic drive unit determines actual shaft position from position sensor output data and calculates target shaft position from actual position data.

[Code generation condition]
- Actuator motor remains stuck as detected by electronic drive unit for 2 seconds.
  (Warning lamp is lit and diagnosis code is displayed on third establishment of code generation condition.)

[Diagnosis check timing]
- Fault diagnosis is continuously performed during the driving cycle.

[Diagnostic requirement]
- Controller area network communication in order

[Control effected by electronic control unit during fault]
- Exhaust gas recirculation control is stopped.
- Throttle controls disabled
- Diesel particulate filter regeneration is stopped.
- Related fault check is stopped.

[Probable cause of trouble]
- Turbocharger actuator unit stuck
- Malfunction of electronic drive unit

[Recoverability]
- Recovered if signal becomes normal when starter switch is turned OFF to ON (power supply resumed to electronic control unit).
  (Warning lamp is extinguished and diagnosis code is cleared at fourth display of diagnosis code after recovery.)

[Electronic Control Unit Connection Diagram]

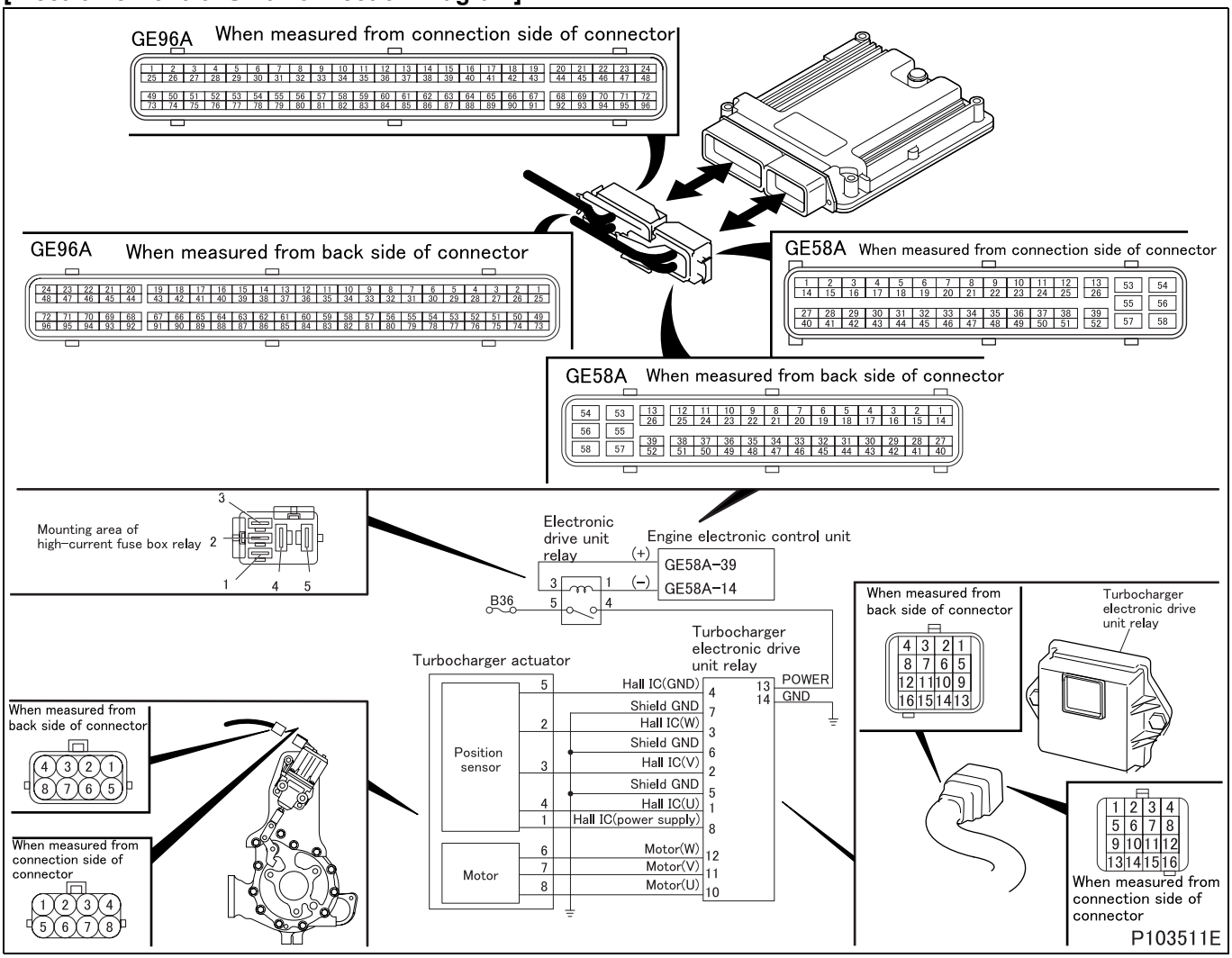

[Parts Identification and Location]

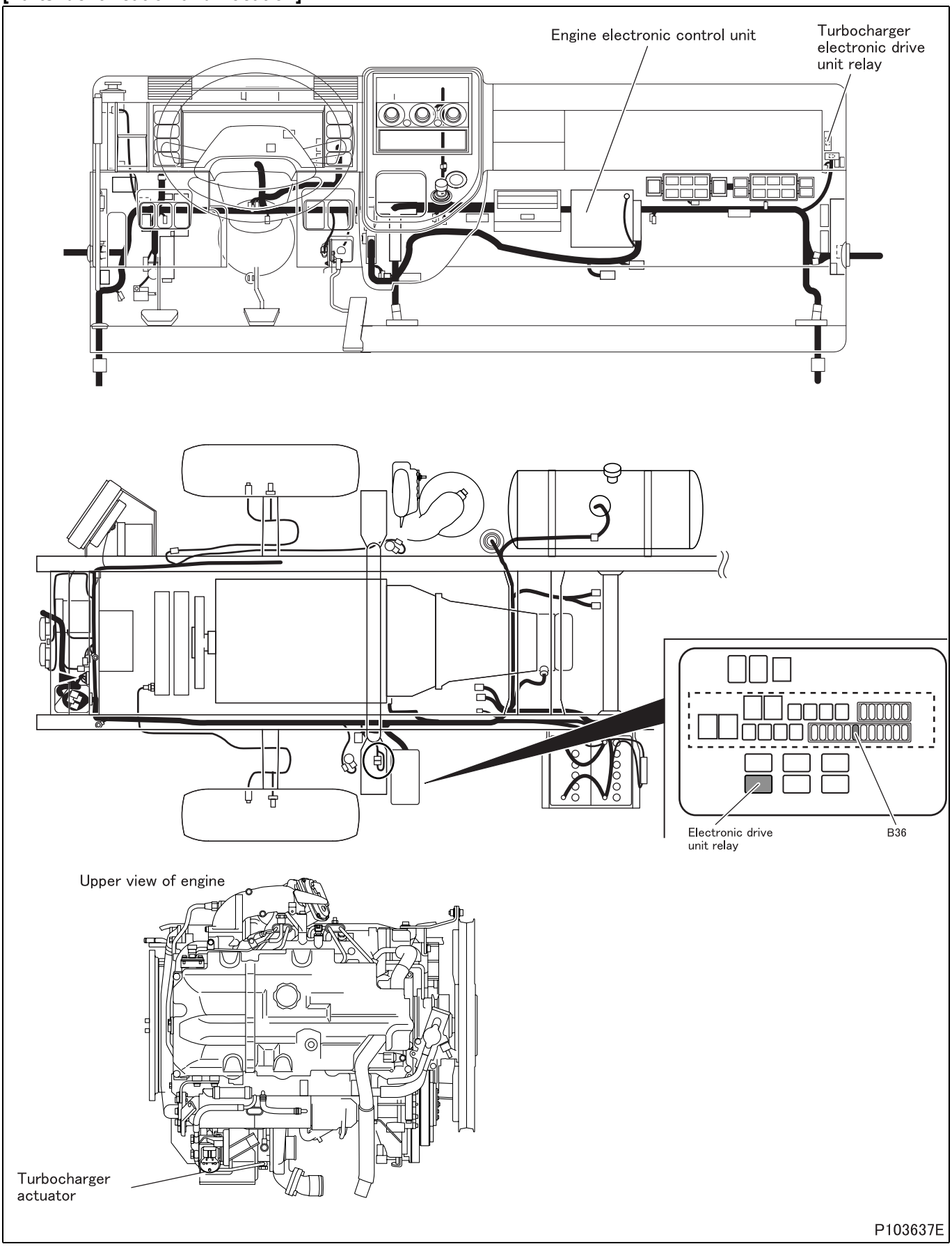

[Fault diagnosis]

- Perform checks in the sequence of the following steps.

Step 1	Inspection items		Inspection by control data
	Maintenance item		Perform actuator test item No. A4 “VGT 1”
	Inspection condition		• Vehicle: stationary (vehicle speed 0 km/h {0 MPH}) • Starter switch: ON (engine started) • Transmission: neutral (parking satisfactory for automatic transmission) • Diagnosis switch: OFF (fuse removed)
	Requirements		Actual position matches with target value set by Multi-Use Tester. (check with service data “54: Target VGT Position, 55: Actual VGT Position”) **NOTE** • **Set turbocharger opening to the range of 20 to 80%.** • **As initial operational check of turbocharger actuator is automatically effected immediately after starter switch is ON, perform actuator test by Multi-Use Tester after that check (approximately 5 seconds later).**
	Inspection result (Is the judging standard satisfied?)	YES	Go to transient fault (See Gr00.).
		NO	Go to step 2.

Step 2	Inspection items		Inspection of electronic drive unit connector
	Maintenance item		Inspection of connector
	Inspection condition		–
	Requirements		• Connector is properly connected. • No trace of water entry is found. • No corrosion is found in terminal. • Connection to terminal is appropriate.
	Inspection result (Is the judging standard satisfied?)	YES	Go to step 3.
		NO	Modify connector.

Step 3	Inspection items		Inspection of turbocharger actuator connector
	Maintenance item		Inspection of connector
	Inspection condition		–
	Requirements		• Connector is properly connected. • No trace of water entry is found. • No corrosion is found in terminal. • Connection to terminal is appropriate.
	Inspection result (Is the judging standard satisfied?)	YES	Go to step 4.
		NO	Modify connector.

Step 4	Inspection items		Inspection by control data
	Maintenance item		Check if following diagnosis codes occur simultaneously. • P0685 “EDU Relay (Open)” • P0686 “EDU Relay (Low)” • P0687 “EDU Relay (High)”
	Inspection condition		Starter switch: ON
	Requirements		No codes occur.
	Inspection result (Is the judging standard satisfied?)	YES	Go to step 5.
		NO	Inspect diagnosis code that is occurring.

Step 5	Inspection items		Inspection of electronic drive unit connector (power supply)
	Maintenance item		Measure value of voltage between connector terminal No. 13 (+) and 14 (–).
	Inspection condition		• Remove connector and measure from harness side. • Starter switch: ON • Perform actuator test item No. AF “EDU Relay”
	Requirements		Same as battery voltage.
	Inspection result (Is the judging standard satisfied?)	YES	Go to step 10.
		NO	Go to step 6.

Step 6	Inspection items		Inspection of relay connector
	Maintenance item		Inspection of connector
	Inspection condition		–
	Requirements		• Connector is properly connected. • No trace of water entry is found. • No corrosion is found in terminal. • Connection to terminal is appropriate.
	Inspection result (Is the judging standard satisfied?)	YES	Go to step 7.
		NO	Modify connector.

Step 7	Inspection items		Inspection of harness between fuse and relay
	Maintenance item		Check circuit between fuse No. B35 and relay connector terminal No. 5
	Inspection condition		Disconnect each device from harness and measure from connection side of harness connector.
	Requirements		There is continuity.
	Inspection result (Is the judging standard satisfied?)	YES	Go to step 8.
		NO	Modify harness.

Step 8	Inspection items		Inspection of harness between relay and electronic drive unit
	Maintenance item		Check circuit between relay connector terminal No. 4 and electronic drive unit connector terminal No. 13
	Inspection condition		Disconnect each device from harness and measure from connection side of harness connector.
	Requirements		There is continuity.
	Inspection result (Is the judging standard satisfied?)	YES	After replacement of electronic drive unit relay, go to step 9
		NO	Modify harness.

Step 9	Inspection items		Inspection of harness between electronic drive unit and ground
	Maintenance item		Check circuit between following electronic drive unit connector terminals • Electronic drive unit ground: terminal No. 14 - chassis ground • Sensor shield ground (U): terminal No. 5 - 14 • Sensor shield ground (V): terminal No. 6 - 14 • Sensor shield ground (W): terminal No. 7 - 14 • Sensor ground: terminal No. 4 - 14
	Inspection condition		Disconnect each device from harness and measure from connection side of harness connector.
	Requirements		There is continuity.
	Inspection result (Is the judging standard satisfied?)	YES	Go to step 10.
		NO	Modify harness.

Step 10	Inspection items		Inspection of electronic drive unit connector (motor)
	Maintenance item		Measure value of resistance between following connector terminals. • Between U - V: 10 - 11 • Between U - W: 10 - 12 • Between V - W: 11 - 12
	Inspection condition		–
	Requirements		2.1 ± 0.3 Ω
	Inspection result (Is the judging standard satisfied?)	YES	Go to step 13.
		NO	Go to step 11.

Step 11	Inspection items		Inspection of harness between electronic drive unit and turbocharger actuator (motor)
	Maintenance item		Check circuit between following connector terminals. • Motor (U): electronic drive unit connector terminal No. 10 - turbocharger actuator connector terminal No. 8 • Motor (V): electronic drive unit connector terminal No. 11 - turbocharger actuator connector terminal No. 7 • Motor (W): electronic drive unit connector terminal No. 12 - turbocharger actuator connector terminal No. 6
	Inspection condition		Disconnect each device from harness and measure from connection side of harness connector.
	Requirements		There is continuity.
	Inspection result (Is the judging standard satisfied?)	YES	Go to step 12.
		NO	Modify harness.

Step 12	Inspection items		Inspection of turbocharger actuator unit (motor)
	Maintenance item		Measure value of resistance between following turbocharger actuator connector terminals • Between U - V: 8 - 7 • Between U - W: 8 - 6 • Between V - W: 7 - 6
	Inspection condition		Keep turbocharger actuator installed on vehicle. Remove harness connector, and measure turbocharger actuator side.
	Requirements		2.1 ± 0.3 Ω
	Inspection result (Is the judging standard satisfied?)	YES	Go to step 13.
		NO	Replacement of turbocharger actuator.

<Step 12 inspection diagram>

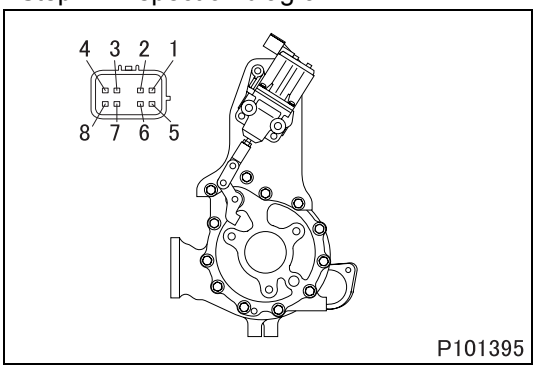

Step 13	Inspection items		Inspection of turbocharger actuator connector (position sensor: power supply)
	Maintenance item		Measure value of voltage between connector terminal No. 1 (+) and 5 (–).
	Inspection condition		• Measure from back side of connector of harness with each device connected to harness. • Starter switch: ON
	Requirements		10 V
	Inspection result (Is the judging standard satisfied?)	YES	Go to step 14.
		NO	Go to step 15.

Step 14	Inspection items		Inspection of electronic drive unit connector (position sensor: signal)
	Maintenance item		Measure value of voltage between following electronic drive unit connector terminals • U signal output: terminal 1 (+) - 4 (–) • V signal output: terminal 2 (+) - 4 (–) • W signal output: terminal 3 (+) - 4 (–)
	Inspection condition		• Measure from back side of connector of harness with each device connected to harness. • Starter switch: ON • Perform Multi-Use Tester actuator test item No. A4 “VGT 1”
	Requirements		8 to 11 V
	Inspection result (Is the judging standard satisfied?)	YES	Go to step 16.
		NO	Go to step 15.

Step 15	Inspection items		Inspection of harness between electronic drive unit and turbocharger actuator (position sensor)
	Maintenance item		Check circuit between following connector terminals. • Sensor (power supply): electronic drive unit connector terminal No. 8 - turbocharger actuator connector terminal No. 1 • Sensor (U): electronic drive unit connector terminal No. 1 - turbocharger actuator connector terminal No. 4 • Sensor (V): electronic drive unit connector terminal No. 2 - turbocharger actuator connector terminal No. 3 • Sensor (W): electronic drive unit connector terminal No. 3 - turbocharger actuator connector terminal No. 2 • Sensor (ground): electronic drive unit connector terminal No. 4 - turbocharger actuator connector terminal No. 5
	Inspection condition		Disconnect each device from harness and measure from connection side of harness connector.
	Requirements		There is continuity.
	Inspection result (Is the judging standard satisfied?)	YES	After replacement of turbocharger, go to step 16
		NO	Modify harness.

Step 16	Inspection items		Inspection by control data
	Maintenance item		Perform actuator test item No. A4 “VGT 1”
	Inspection condition		• Vehicle: stationary (vehicle speed 0 km/h {0 MPH}) • Starter switch: ON (engine started) • Transmission: neutral (parking satisfactory for automatic transmission) • Diagnosis switch: OFF (fuse removed)
	Requirements		Actual position matches with target value set by Multi-Use Tester. (check with service data “54: Target VGT Position, 55: Actual VGT Position”) **NOTE** • **Set turbocharger opening to the range of 20 to 80%.** • **As initial operational check of turbocharger actuator is automatically effected immediately after starter switch is ON, perform actuator test by Multi-Use Tester after that check (approximately 5 seconds later).**
	Inspection result (Is the judging standard satisfied?)	YES	Go to transient fault (See Gr00.).
		NO	Replacement of electronic drive unit

[Fault code]
Diagnosis code: P0047/Flash code: 51
[Monitor]
Failure of turbocharger actuator
[Fault (outline)]
Circuit
[Diagnosis check]
- Turbocharger electronic drive unit monitors built-in motor of turbocharger actuator for circuit fault and sends fault information to engine electronic control unit through controller area network communication.
- Monitoring by turbocharger electronic drive unit is performed from internal current detection circuit.

[Code generation condition]
- Actuator motor circuit remains shorted as detected by electronic drive unit for 2 seconds. (Warning lamp is lit and diagnosis code is displayed on third establishment of code generation condition.)

[Diagnosis check timing]
- Fault diagnosis is continuously performed during the driving cycle.

[Diagnostic requirement]
- Controller area network communication in order

[Control effected by electronic control unit during fault]
- Exhaust gas recirculation control is stopped.
- Throttle controls disabled
- Diesel particulate filter regeneration is stopped.
- Related fault check is stopped.

[Probable cause of trouble]
- Open-circuit or short-circuit harness between electronic drive unit and turbocharger actuator
- Malfunction of each connector
- Malfunction of turbocharger motor (built in turbocharger actuator)
- Malfunction of turbocharger position sensor (built in turbocharger actuator)
- Malfunction of electronic drive unit
- Malfunction of electronic drive unit relay

[Recoverability]
- Recovered if signal becomes normal when starter switch is turned OFF to ON (power supply resumed to electronic control unit).
  (Warning lamp is extinguished and diagnosis code is cleared at fourth display of diagnosis code after recovery.)

[Electronic Control Unit Connection Diagram]

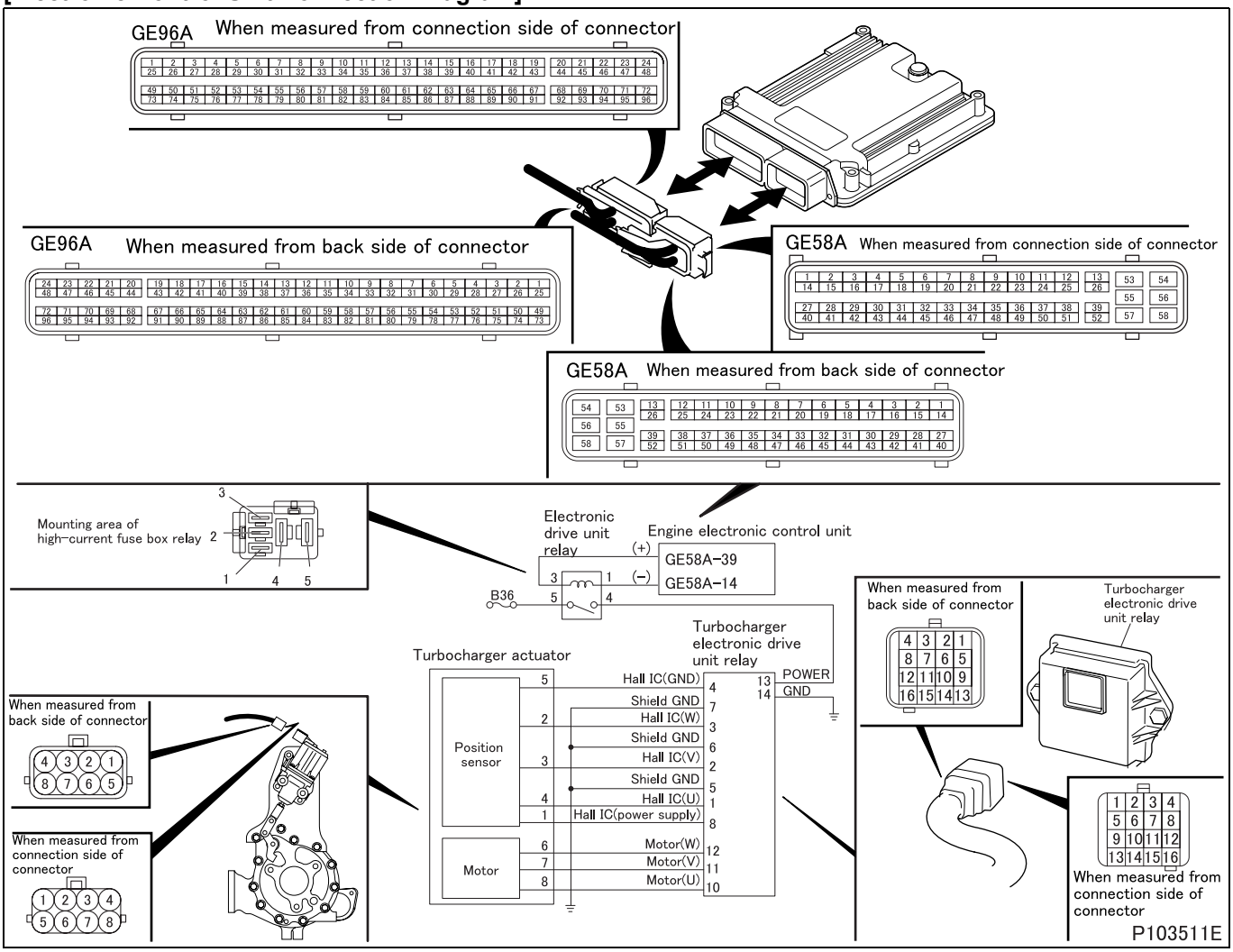

[Parts Identification and Location]

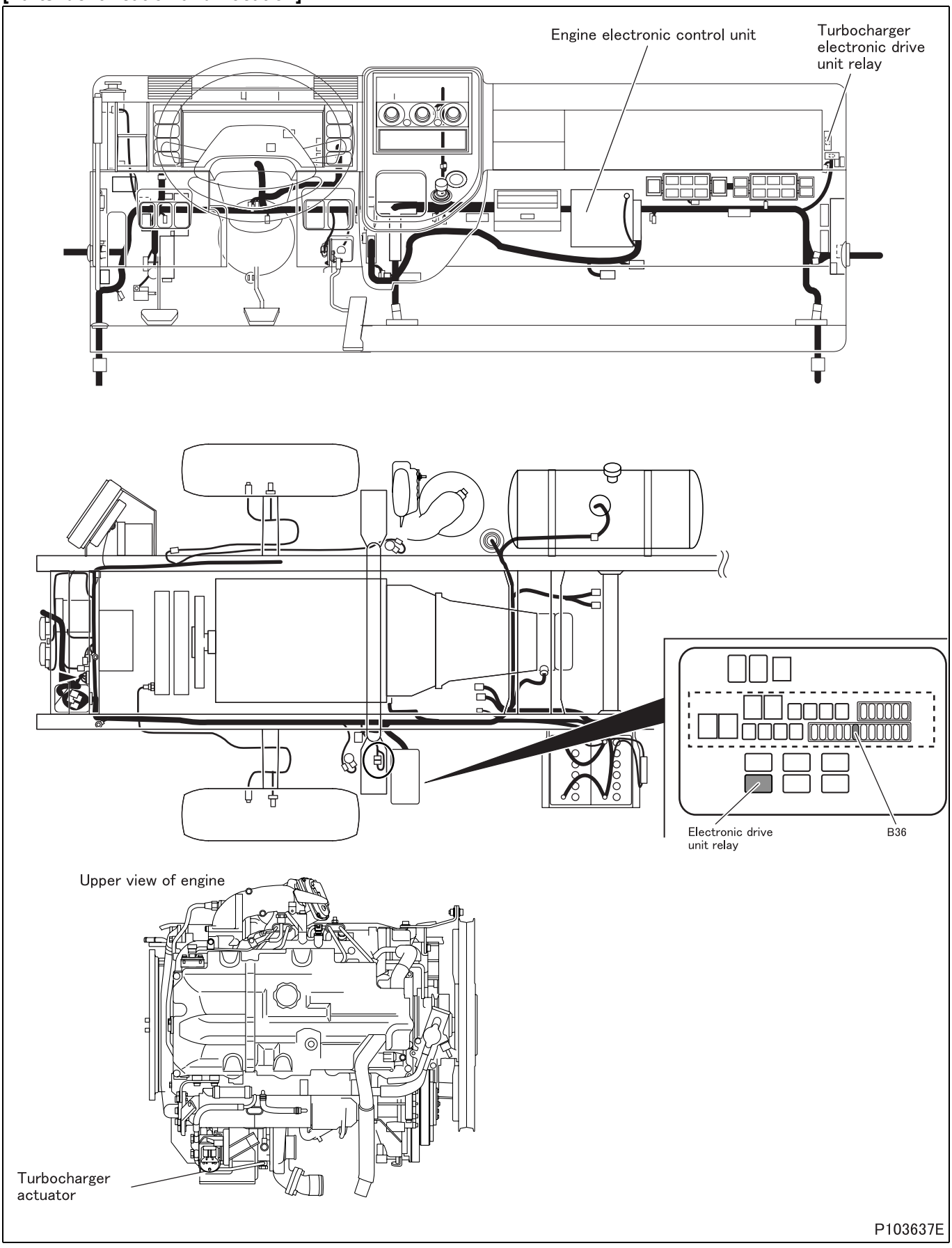

[Fault diagnosis]

- Perform checks in the sequence of the following steps.

Step 1	Inspection items		Inspection by control data
	Maintenance item		Perform actuator test item No. A4 “VGT 1”
	Inspection condition		• Vehicle: stationary (vehicle speed 0 km/h {0 MPH}) • Starter switch: ON (engine started) • Transmission: neutral (parking satisfactory for automatic transmission) • Diagnosis switch: OFF (fuse removed)
	Requirements		Actual position matches with target value set by Mult-Use Tester. (check with service data “54: Target VGT Position, 55: Actual VGT Position”) **NOTE** • **Set turbocharger opening to the range of 20 to 80%.** • **As initial operational check of turbocharger actuator is automatically effected immediately after starter switch is ON, perform actuator test by Multi-Use Tester after that check (approximately 5 seconds later).**
	Inspection result (Is the judging standard satisfied?)	YES	Go to transient fault (See Gr00.).
		NO	Go to step 2.

Step 2	Inspection items		Inspection of electronic drive unit relay
	Maintenance item		Inspection of connector
	Inspection condition		–
	Requirements		• Connector is properly connected. • No trace of water entry is found. • No corrosion is found in terminal. • Connection to terminal is appropriate.
	Inspection result (Is the judging standard satisfied?)	YES	Go to step 3.
		NO	Modify connector.

Step 3	Inspection items		Inspection of turbocharger actuator connector
	Maintenance item		Inspection of connector
	Inspection condition		–
	Requirements		• Connector is properly connected. • No trace of water entry is found. • No corrosion is found in terminal. • Connection to terminal is appropriate.
	Inspection result (Is the judging standard satisfied?)	YES	Go to step 4.
		NO	Modify connector.

Step 4	Inspection items		Inspection by control data
	Maintenance item		Check if following diagnosis codes occur simultaneously. • P0685 “EDU Relay (Open)” • P0686 “EDU Relay (Low)” • P0687 “EDU Relay (High)”
	Inspection condition		Starter switch: ON
	Requirements		No codes occur.
	Inspection result (Is the judging standard satisfied?)	YES	Go to step 5.
		NO	Inspect diagnosis code that is occurring.

Step 5	Inspection items		Inspection of electronic drive unit connector (power supply)
	Maintenance item		Measure value of voltage between connector terminal No. 13 (+) and 14 (–).
	Inspection condition		• Remove connector and measure from harness side. • Starter switch: ON • Perform Multi-Use Tester actuator test item No. AF “EDU Relay”
	Requirements		Same as battery voltage.
	Inspection result (Is the judging standard satisfied?)	YES	Go to step 10.
		NO	Go to step 6.

Step 6	Inspection items		Inspection of relay connector
	Maintenance item		Inspection of connector
	Inspection condition		–
	Requirements		• Connector is properly connected. • No trace of water entry is found. • No corrosion is found in terminal. • Connection to terminal is appropriate.
	Inspection result (Is the judging standard satisfied?)	YES	Go to step 7.
		NO	Modify connector.

Step 7	Inspection items		Inspection of harness between fuse and relay
	Maintenance item		Check circuit between fuse No. B35 and relay connector terminal No. 5
	Inspection condition		Disconnect each device from harness and measure from connection side of harness connector.
	Requirements		There is continuity.
	Inspection result (Is the judging standard satisfied?)	YES	Go to step 8.
		NO	Modify harness.

Step 8	Inspection items		Inspection of harness between relay and electronic drive unit
	Maintenance item		Check circuit between relay connector terminal No. 4 and electronic drive unit connector terminal No. 13
	Inspection condition		Disconnect each device from harness and measure from connection side of harness connector.
	Requirements		There is continuity.
	Inspection result (Is the judging standard satisfied?)	YES	After replacement of electronic drive unit relay, go to step 9
		NO	Modify harness.

Step 9	Inspection items		Inspection of harness between electronic drive unit and ground
	Maintenance item		Check circuit between following electronic drive unit connector terminals • Electronic drive unit ground: terminal No. 14 - chassis ground • Sensor shield ground (U): terminal No. 5 - 14 • Sensor shield ground (V): terminal No. 6 - 14 • Sensor shield ground (W): terminal No. 7 - 14 • Sensor ground: terminal No. 4 - 14
	Inspection condition		Disconnect each device from harness and measure from connection side of harness connector.
	Requirements		There is continuity.
	Inspection result (Is the judging standard satisfied?)	YES	Go to step 10.
		NO	Modify harness.

Step 10	Inspection items		Inspection of electronic drive unit connector (motor)
	Maintenance item		Measure value of resistance between following connector terminals. • Between U - V: 10 - 11 • Between U - W: 10 - 12 • Between V - W: 11 - 12
	Inspection condition		–
	Requirements		2.1 ± 0.3 Ω
	Inspection result (Is the judging standard satisfied?)	YES	Go to step 13.
		NO	Go to step 11.

Step 11	Inspection items		Inspection of harness between electronic drive unit and turbocharger actuator (motor)
	Maintenance item		Check circuit between following connector terminals. • Motor (U): electronic drive unit connector terminal No. 10 - turbocharger actuator connector terminal No. 8 • Motor (V): electronic drive unit connector terminal No. 11 - turbocharger actuator connector terminal No. 7 • Motor (W): electronic drive unit connector terminal No. 12 - turbocharger actuator connector terminal No. 6
	Inspection condition		Disconnect each device from harness and measure from connection side of harness connector.
	Requirements		There is continuity.
	Inspection result (Is the judging standard satisfied?)	YES	Go to step 12.
		NO	Modify harness.

Step 12	Inspection items		Inspection of turbocharger actuator unit (motor)
	Maintenance item		Measure value of resistance between following turbocharger actuator connector terminals • Between U - V: 8 - 7 • Between U - W: 8 - 6 • Between V - W: 7 - 6
	Inspection condition		Keep turbocharger actuator installed on vehicle. Remove harness connector, and measure turbocharger actuator side.
	Requirements		2.1 ± 0.3 Ω
	Inspection result (Is the judging standard satisfied?)	YES	Go to step 13.
		NO	Replacement of turbocharger actuator

<Step 12 inspection diagram>

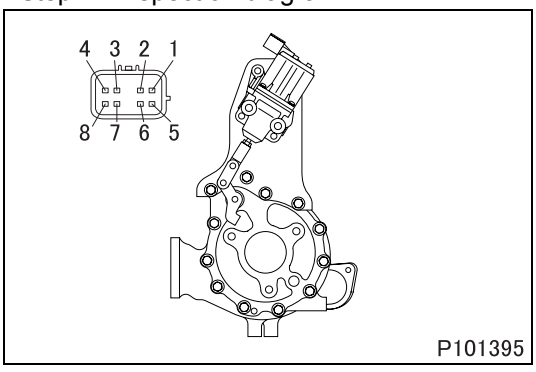

Step 13	Inspection items		Inspection of turbocharger actuator connector (position sensor: power supply)
	Maintenance item		Measure value of voltage between connector terminal No. 1 (+) and 5 (–).
	Inspection condition		• Measure from back side of connector of harness with each device connected to harness. • Starter switch: ON
	Requirements		10 V
	Inspection result (Is the judging standard satisfied?)	YES	Go to step 14.
		NO	Go to step 15.

Step 14	Inspection items		Inspection of electronic drive unit connector (position sensor: signal)
	Maintenance item		Measure value of voltage between following electronic drive unit connector terminals • U signal output: terminal 1 (+) - 4 (–) • V signal output: terminal 2 (+) - 4 (–) • W signal output: terminal 3 (+) - 4 (–)
	Inspection condition		• Measure from back side of connector of harness with each device connected to harness. • Starter switch: ON • Perform actuator test item No. A4 “VGT 1”
	Requirements		8 to 11 V
	Inspection result (Is the judging standard satisfied?)	YES	Go to step 16.
		NO	Go to step 15.

Step 15	Inspection items		Inspection of harness between electronic drive unit and turbocharger actuator (position sensor)
	Maintenance item		Check circuit between following connector terminals. • Sensor (power supply): electronic drive unit connector terminal No. 8 - variable geometry turbocharger actuator connector terminal No. 1 • Sensor (U): electronic drive unit connector terminal No. 1 - turbocharger actuator connector terminal No. 4 • Sensor (V): electronic drive unit connector terminal No. 2 - turbocharger actuator connector terminal No. 3 • Sensor (W): electronic drive unit connector terminal No. 3 - turbocharger actuator connector terminal No. 2 • Sensor (ground): electronic drive unit connector terminal No. 4 - turbocharger actuator connector terminal No. 5
	Inspection condition		Disconnect each device from harness and measure from connection side of harness connector.
	Requirements		There is continuity.
	Inspection result (Is the judging standard satisfied?)	YES	After replacement of turbocharger, go to step 16
		NO	Modify harness.

Step 16	Inspection items		Inspection by control data
	Maintenance item		Perform actuator test item No. A4 “VGT 1”
	Inspection condition		• Vehicle: stationary (vehicle speed 0 km/h {0 MPH}) • Starter switch: ON (engine started) • Transmission: neutral (parking satisfactory for automatic transmission) • Diagnosis switch: OFF (fuse removed)
	Requirements		Actual position matches with target value set by Multi-Use Tester. (check with service data “54: Target VGT Position, 55: Actual VGT Position”) **NOTE** • **Set turbocharger opening to the range of 20 to 80%.** • **As initial operational check of turbocharger actuator is automatically effected immediately after starter switch is ON, perform actuator test by Multi-Use Tester after that check (approximately 5 seconds later).**
	Inspection result (Is the judging standard satisfied?)	YES	Go to transient fault (See Gr00.).
		NO	Replacement of electronic drive unit

[Fault code]
Diagnosis code: P0069/Flash code: 19
[Monitor]
Characteristic abnormality of atmospheric pressure sensor (built into engine electronic control unit)
[Fault (outline)]
Gain and offset drift
[Diagnosis check]
- Values of atmospheric pressure sensor and boost pressure sensor are compared when engine is in considerably low speed operation (value of boost pressure sensor is corrected value by exhaust gas recirculation valve position and throttle position)

[Code generation condition]
- Atmospheric pressure value remains higher than boost pressure value by 14 kPa {2.0 psi, 0.1 kgf/cm^2} for 10 consecutive seconds.
  (Warning lamp is lit and diagnosis code is displayed on third establishment of code generation condition.)

[Diagnosis check timing]
- Fault diagnosis is performed only once during the driving cycle.

[Diagnostic requirement]
- Engine operating mode: normal (engine in operation)
- Engine speed: less than 850 rpm
- Fuel injection quantity: less than 10 mg/cyc
- Exhaust gas recirculation valve: in order
- Intake throttle: in order
- Turbocharger actuator: in order
- Controller area network communication of each electronic drive unit (exhaust gas recirculation, intake throttle and turbocharger): in order
- Atmospheric pressure sensor: in order
- Boost pressure sensor: in order
- Sensor 5 V power supply: in order
- Battery voltage: in order
- Injector: in order
- MPROP (rail pressure control valve): in order
- Fuel feed when engine is idling: in order

[Control effected by electronic control unit during fault]
- Exhaust gas recirculation control is stopped.
- Throttle controls disabled
- In-use performance counter is stopped.
- Related fault check is stopped.

[Probable cause of trouble]
- Open-circuit or short-circuit of harness between electronic control unit and sensor
- Malfunction of each connector
- Malfunction of sensor
- Malfunction of electronic control unit

[Recoverability]
- Recovered if signal becomes normal when starter switch is turned OFF to ON (power supply resumed to electronic control unit).
  (Warning lamp is extinguished and diagnosis code is cleared at fourth display of diagnosis code after recovery.)

[Fault diagnosis]

- Perform checks in the sequence of the following steps.

Step 1	Inspection items		Inspection by control data
	Maintenance item		Check if following diagnosis codes occur simultaneously. • P0234 “Overboost” • P0236 “Boost Press SNSR (Plausi)” • P0237 “Boost Press SNSR (Low)” • P0238 “Boost Press SNSR (High)” • P0299 “Turbocharger (Underboost)” • P2228 “Atm Press SNSR (Low)” • P2229 “Atm Press SNSR (High)”
	Inspection condition		• Starter switch: ON • Engine: Idling
	Requirements		Codes occur.
	Inspection result (Is the judging standard satisfied?)	YES	Go to step 2.
		NO	Inspect diagnosis code that is occurring.

Step 2	Inspection items		Inspection by control data
	Maintenance item		**<General Scanning Tool used>** • Measure item “Intake MAP”. **<Multi-Use Tester used>** • Measure item No. 20 “Atmospheric Pressure” of Service Data.
	Inspection condition		Starter switch ON (engine stationary) → After engine has started, press accelerator pedal.
	Requirements		Coincides with atmospheric pressure → Gradually increases
	Inspection result (Is the judging standard satisfied?)	YES	Go to transient fault (See Gr00.).
		NO	Replacement of electronic control unit

[Fault code]
Diagnosis code: P0087/Flash code: 36
[Monitor]
Abnormality of common rail pressure (comparison)
[Fault (outline)]
Rail pressure regulator adjustment
[Diagnosis check]
- Pressure in common rail is detected as actual common rail pressure by common rail pressure sensor and compared with target common rail pressure for control by engine electronic control unit.

[Code generation condition]
- Actual common rail pressure remains higher than target common rail pressure by 300 bar or more for 10 seconds (not reaching the target pressure). (Warning lamp is lit and diagnosis code is displayed on first establishment of code generation condition.)

[Diagnosis check timing]
- Fault diagnosis is performed only once during the driving cycle.

[Diagnostic requirement]
- Common rail pressure control: closed loop control

[Control effected by electronic control unit during fault]
- Engine torque is limited.
- Exhaust gas recirculation control is stopped.
- Throttle controls disabled
- Misfire detection is stopped.
- Auto cruise control stopped
- Traction control is stopped <Automatic transmission>
- Diesel particulate filter regeneration is stopped.
- Related fault check is stopped.

[Probable cause of trouble]
- Malfunction of supply pump (overflow valve)
- Malfunction of pressure limiting valve
- Airtight malfunction of injector
- Plugged fuel system
- Fuel leakage
- Malfunction of common rail pressure sensor

[Recoverability]
- Recovered if signal becomes normal when starter switch is turned OFF to ON (power supply resumed to electronic control unit).
  (Warning lamp is extinguished and diagnosis code is cleared at fourth display of diagnosis code after recovery.)

[Fault diagnosis]

- Perform checks in the sequence of the following steps.

Step 1	Inspection items		Inspection by control data
	Maintenance item		Check if following diagnosis codes occur simultaneously. • P0093 “CRS (Fuel Leak)” • P0148 “CRS (Fuel Delivery)” • P0191 “CRS Pressure SNSR (Plausibility)” • P0192 “CRS Pressure SNSR (Low)” • P0193 “CRS Pressure SNSR (High)” • P0201 “Injector M/V-Cylinder 1 (Load)” • P0202 “Injector M/V-Cylinder 2 (Load)” • P0203 “Injector M/V-Cylinder 3 (Load)” • P0204 “Injector M/V-Cylinder 4 (Load)” • P0261 “Injector #1-A (Low)” • P0262 “Injector #1-A (High)” • P0263 “Injector #1-A (Plausibility)” • P0264 “Injector #2-A (Low)” • P0265 “Injector #2-A (High)” • P0266 “Injector #2-A (Plausibility)” • P0267 “Injector #3-A (Low)” • P0268 “Injector #3-A (High)” • P0269 “Injector #3-A (Plausibility)” • P0270 “Injector #4-A (Low)” • P0271 “Injector #4-A (High)” • P0272 “Injector #4-A (Plausibility)” • P0562 “Power Supply Voltage (Low)” • P0563 “Power Supply Voltage (High)” • P0607 “ECU System” • P060B “A/D Converter” • P061B “ECU Performance (Calc)” • P061C “ECU Performance (Ne)”
	Inspection condition		• Starter switch: ON • Do not start engine.
	Requirements		No codes occur.
	Inspection result (Is the judging standard satisfied?)	YES	Go to step 2.
		NO	Inspect diagnosis code that is occurring.

Step 2	Inspection items		Checking of engine appearance
	Maintenance item		Check fuel system for fuel leak.
	Inspection condition		Starter switch: OFF
	Requirements		There is no fuel leak.
	Inspection result (Is the judging standard satisfied?)	YES	Go to step 3.
		NO	Go to step 6.

Step 3	Inspection items		Inspection of low pressure piping (fuel tank – supply pump)
	Maintenance item		Check suction pipe or hose for bend.
	Inspection condition		Starter switch: OFF
	Requirements		There is no bend on pipe or hose.
	Inspection result (Is the judging standard satisfied?)	YES	Go to step 4.
		NO	Correct and replace suction pipe or hose.

Step 4	Inspection items		Checking of air bleeding
	Maintenance item		Bleed air from fuel filter.
	Inspection condition		Starter switch: OFF
	Requirements		Problem is solved by bleeding air.
	Inspection result (Is the judging standard satisfied?)	YES	–
		NO	Go to step 5.

Step 5	Inspection items		Inspection of low pressure piping
	Maintenance item		Fuel filter
	Inspection condition		Starter switch: OFF
	Requirements		Problem is solved by replacing fuel filter.
	Inspection result (Is the judging standard satisfied?)	YES	–
		NO	Go to step 6.

Step 6	Inspection items		Inspection by control data
	Maintenance item		Perform actuator test item No. B2 “Fuel Leak Check”
	Inspection condition		Engine start: At idle
	Requirements		There is no leak from supply pump.
	Inspection result (Is the judging standard satisfied?)	YES	Go to step 7.
		NO	Replacement of supply pump

Step 7	Inspection items		Inspection by control data
	Maintenance item		Perform actuator test item No. B2 “Fuel Leak Check”
	Inspection condition		Engine start: At idle
	Requirements		There is no leak from fuel pipe between supply pump and rail.
	Inspection result (Is the judging standard satisfied?)	YES	Go to step 8.
		NO	Replacement of fuel pipe

Step 8	Inspection items		Inspection by control data
	Maintenance item		Perform actuator test item No. B2 “Fuel Leak Check”
	Inspection condition		Engine start: At idle
	Requirements		There is no leak from rail.
	Inspection result (Is the judging standard satisfied?)	YES	Go to step 9.
		NO	Replacement of rail

Step 9	Inspection items		Inspection by control data
	Maintenance item		Perform actuator test item No. B2 “Fuel Leak Check”
	Inspection condition		Engine start: At idle
	Requirements		There is no leak from fuel injection pipes (four) between injector and rail.
	Inspection result (Is the judging standard satisfied?)	YES	Go to step 10.
		NO	Replacement of injection pipe

Step 10	Inspection items		Inspection by control data
	Maintenance item		Perform actuator test item No. B2 “Fuel Leak Check”
	Inspection condition		Engine start: At idle
	Requirements		There is no leak from injectors (four).
	Inspection result (Is the judging standard satisfied?)	YES	Go to step 11.
		NO	Replacement of injector

Step 11	Inspection items		Check inside of combustion chamber.
	Maintenance item		Check for fuel leak.
	Inspection condition		• After performing actuator test item No. B2 “Fuel Leak Check”, stop engine. • Remove glow plug, and check from glow plug mounting hole using bore scope.
	Requirements		Inside of combustion chamber is not wet.
	Inspection result (Is the judging standard satisfied?)	YES	Go to step 12.
		NO	Replacement of injector of object cylinder

Step 12	Inspection items		Replacement of rail (common rail pressure sensor, flow damper and pressure limiter abnormal)
	Maintenance item		–
	Inspection condition		–
	Requirements		Problem is solved by replacing rail.
	Inspection result (Is the judging standard satisfied?)	YES	–
		NO	Go to step 13.

Step 13	Inspection items		Replacement of supply pump
	Maintenance item		–
	Inspection condition		–
	Requirements		Problem is solved by replacing supply pump.
	Inspection result (Is the judging standard satisfied?)	YES	–
		NO	Replacement of injectors (four)

[Fault code]
Diagnosis code: P0088/Flash code: 23
[Monitor]
Abnormality of common rail pressure (pressure: high)
[Fault (outline)]
Plausibility
[Diagnosis check]
- Pressure in common rail is detected as actual common rail pressure by common rail pressure sensor and compared with target common rail pressure for control by engine electronic control unit.

[Code generation condition]
Diagnosis code is generated under either of the following conditions.
<Condition (1)>
- Actual common rail pressure remains 300 bar apart from target common rail pressure for 10 seconds (considerably exceeding the target value).
  (Warning lamp (orange) is lit and diagnosis code is displayed on first establishment of code generation condition.)

<Condition (2)>
- Common rail pressure remains at 190 MPa {27560 psi, 1937 kgf/cm^2} or higher for 5 consecutive seconds.
  (Warning lamp (red) is lit and diagnosis code is displayed on first establishment of code generation condition.)

[Diagnosis check timing]
- Fault diagnosis is performed only once during the driving cycle.

[Diagnostic requirement]
- Common rail pressure control: closed loop control

[Control effected by electronic control unit during fault]
Electronic control unit varies in the way of control by the color of warning lamp.
<Warning lamp: Orange>
- Engine torque is limited.
- MPROP (rail pressure control valve) control is stopped.
- Exhaust gas recirculation control is stopped.
- Throttle controls disabled
- Misfire detection is stopped.
- Auto cruise control stopped
- Traction control is stopped <Automatic transmission>
- Diesel particulate filter regeneration is stopped.
- Related fault check is stopped.

<Warning lamp: Red>
- Engine torque is limited.
- MPROP (rail pressure control valve) control is stopped.
- Exhaust gas recirculation control is stopped.
- Throttle controls disabled
- Auto cruise control stopped
- Traction control is stopped <Automatic transmission>
- Diesel particulate filter regeneration is stopped.

[Probable cause of trouble]
- Malfunction of supply pump (overflow valve)
- Malfunction of pressure limiting valve
- Airtight malfunction of injector
- Plugged fuel system
- Fuel leakage
- Malfunction of common rail pressure sensor

[Recoverability]

- Recovered if signal becomes normal when starter switch is turned OFF to ON (power supply resumed to electronic control unit).
  (Timing of warning lamp/diagnosis code OFF depends on condition.)

<Condition (1)>

- Lamp is extinguished and code is cleared at fourth diagnosis code display after recovery.

<Condition (2)>

- Lamp is extinguished and code is cleared simultaneously with recovery.

[Fault diagnosis]

- Perform checks in the sequence of the following steps.

Step 1	Inspection items		Inspection by control data
	Maintenance item		Check if following diagnosis codes occur simultaneously. • P0093 “CRS (Fuel Leak)” • P0148 “CRS (Fuel Delivery)” • P0191 “CRS Pressure SNSR (Plausibility)” • P0192 “CRS Pressure SNSR (Low)” • P0193 “CRS Pressure SNSR (High)” • P0201 “Injector M/V-Cylinder 1 (Load)” • P0202 “Injector M/V-Cylinder 2 (Load)” • P0203 “Injector M/V-Cylinder 3 (Load)” • P0204 “Injector M/V-Cylinder 4 (Load)” • P0261 “Injector #1-A (Low)” • P0262 “Injector #1-A (High)” • P0263 “Injector #1-A (Plausibility)” • P0264 “Injector #2-A (Low)” • P0265 “Injector #2-A (High)” • P0266 “Injector #2-A (Plausibility)” • P0267 “Injector #3-A (Low)” • P0268 “Injector #3-A (High)” • P0269 “Injector #3-A (Plausibility)” • P0270 “Injector #4-A (Low)” • P0271 “Injector #4-A (High)” • P0272 “Injector #4-A (Plausibility)” • P0562 “Power Supply Voltage (Low)” • P0563 “Power Supply Voltage (High)” • P0607 “ECU System” • P060B “A/D Converter” • P061B “ECU Performance (Calc)” • P061C “ECU Performance (Ne)”
	Inspection condition		• Starter switch: ON • Do not start engine.
	Requirements		No codes occur.
	Inspection result (Is the judging standard satisfied?)	YES	Replacement of supply pump
		NO	Inspect diagnosis code that is occurring.

[Fault code]
Diagnosis code: P0089/Flash code: 63
[Monitor]
Failure of MPROP (rail pressure control valve)
[Fault (outline)]
Overload
[Diagnosis check]
- Engine electronic control unit internal function monitors MPROP (rail pressure control valve) circuit for overcurrent.

[Code generation condition]
- Overcurrent remains as detected by engine electronic control unit internal function for 3 seconds.
  (Warning lamp is lit and diagnosis code is displayed on first establishment of code generation condition.)

[Diagnosis check timing]
- Fault diagnosis is continuously performed during the driving cycle.

[Diagnostic requirement]
–

[Control effected by electronic control unit during fault]
- Engine torque is limited.
- MPROP (rail pressure control valve) control is stopped.
- Exhaust gas recirculation control is stopped.
- Throttle controls disabled
- Misfire detection is stopped.
- Auto cruise control stopped
- Traction control is stopped <Automatic transmission>
- Diesel particulate filter regeneration is stopped.
- Related fault check is stopped.

[Probable cause of trouble]
- Open-circuit or short-circuit of harness between electronic control unit and MPROP (rail pressure control valve)
- Malfunction of each connector
- Malfunction of MPROP (rail pressure control valve)
- Malfunction of electronic control unit

[Recoverability]
- Recovered if signal becomes normal when starter switch is turned OFF to ON (power supply resumed to electronic control unit).
  (Warning lamp is extinguished and diagnosis code is cleared at fourth display of diagnosis code after recovery.)

[Electronic Control Unit Connection Diagram]

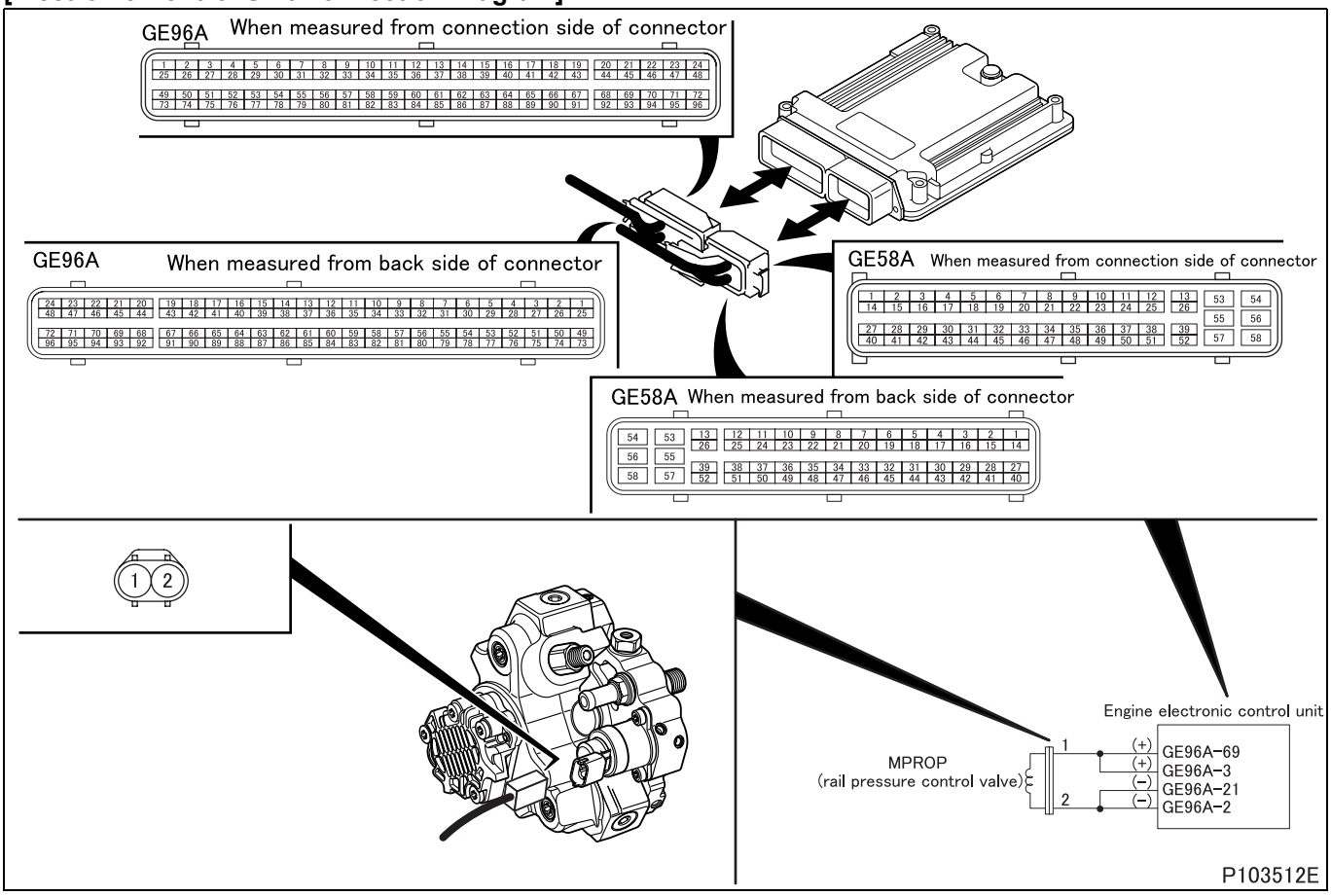

[Parts Identification and Location]

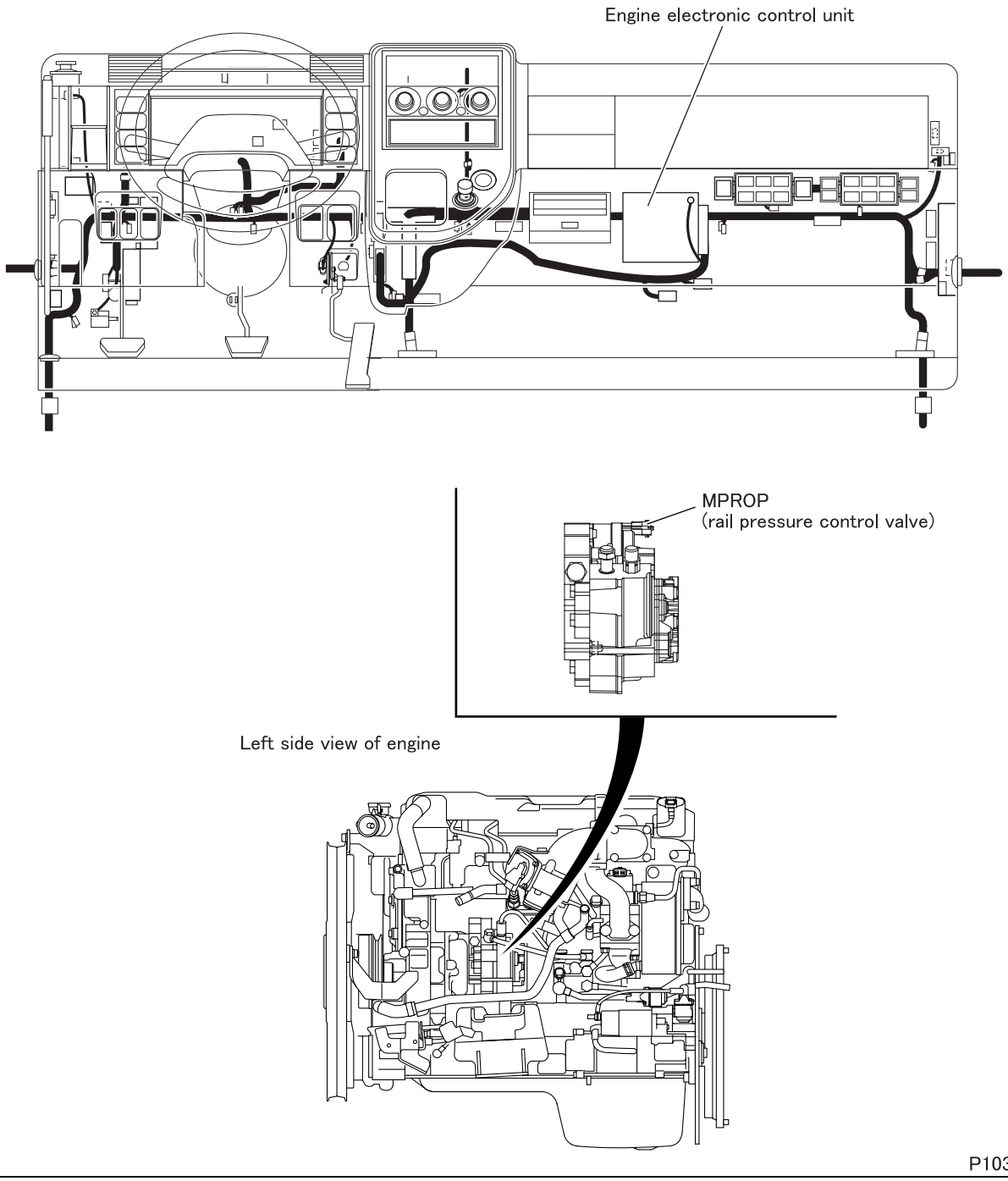

[Fault diagnosis]

- Perform checks in the sequence of the following steps.

Step 1	Inspection items		Inspection by electronic control unit connector
	Maintenance item		Measure value of resistance between connector (GE96A) terminal No. 3 or No. 69 and No. 2 or No. 21.
	Inspection condition		Disconnect electronic control unit and harness, and measure from connection side of harness connector.
	Requirements		2.6 to 3.15 Ω
	Inspection result (Is the judging standard satisfied?)	YES	Go to step 2.
		NO	Go to step 3.

Step 2	Inspection items		Inspection of electronic control unit connector
	Maintenance item		Inspection of connector
	Inspection condition		–
	Requirements		• Connector is properly connected. • No trace of water entry is found. • No corrosion is found in terminal. • Connection to terminal is appropriate.
	Inspection result (Is the judging standard satisfied?)	YES	Go to step 7.
		NO	Modify connector.

Step 3	Inspection items		Inspection of MPROP (rail pressure control valve) connector
	Maintenance item		Inspection of connector
	Inspection condition		–
	Requirements		• Connector is properly connected. • No trace of water entry is found. • No corrosion is found in terminal. • Connection to terminal is appropriate.
	Inspection result (Is the judging standard satisfied?)	YES	Go to step 4.
		NO	Modify connector.

Step 4	Inspection items		Inspection of MPROP (rail pressure control valve) unit
	Maintenance item		Check continuity across MPROP (rail pressure control valve) connector terminal No. 1 and 2.
	Inspection condition		–
	Requirements		There is continuity.
	Inspection result (Is the judging standard satisfied?)	YES	Go to step 5.
		NO	Replacement of supply pump

<Step 4 inspection diagram>

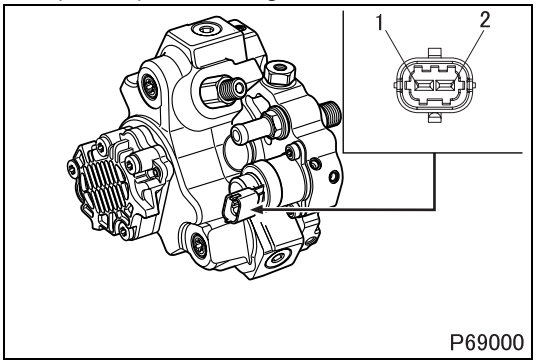

Step 5	Inspection items		Inspection of harness between electronic control unit and MPROP (rail pressure control valve) (power supply)
	Maintenance item		Check circuit between MPROP (rail pressure control valve) connector terminal No. 1 and electronic control unit connector (GE96A) terminal No. 3 or No. 69.
	Inspection condition		–
	Requirements		There is continuity.
	Inspection result (Is the judging standard satisfied?)	YES	Go to step 6.
		NO	Modify harness.

Step 6	Inspection items		Inspection of harness between electronic control unit and MPROP (rail pressure control valve) (ground)
	Maintenance item		Check circuit between MPROP (rail pressure control valve) connector terminal No. 2 and electronic control unit connector (GE96A) terminal No. 2 or No. 21.
	Inspection condition		–
	Requirements		There is continuity.
	Inspection result (Is the judging standard satisfied?)	YES	Go to step 7.
		NO	Modify harness.

Step 7	Inspection items		Inspection by control data
	Maintenance item		Perform actuator test item No. B2 “Fuel Leak Check” under the following conditions.
	Inspection condition		• Vehicle: stationary (vehicle speed 0 km/h {0 MPH}) • Transmission: neutral • Diagnosis switch: OFF (fuse removed)
	Requirements		This diagnosis code is not displayed again.
	Inspection result (Is the judging standard satisfied?)	YES	Go to transient fault (See Gr00.).
		NO	Replacement of electronic control unit

[Fault code]
Diagnosis code: P0090/Flash code: 63
[Monitor]
Failure of MPROP (rail pressure control valve)
[Fault (outline)]
MPROP (rail pressure control valve) open – circuit
[Diagnosis check]
- Engine electronic control unit internal function monitors MPROP (rail pressure control valve) for open-circuit.

[Code generation condition]
- Open-circuit remains as detected by engine electronic control unit internal function for 0.3 second.
  (Warning lamp is lit and diagnosis code is displayed on first establishment of code generation condition.)

[Diagnosis check timing]
- Fault diagnosis is continuously performed during the driving cycle.

[Diagnostic requirement]
–

[Control effected by electronic control unit during fault]
- Engine torque is limited.
- MPROP (rail pressure control valve) control is stopped.
- Exhaust gas recirculation control is stopped.
- Throttle controls disabled
- Misfire detection is stopped.
- Auto cruise control stopped
- Traction control is stopped <Automatic transmission>
- Diesel particulate filter regeneration is stopped.
- Related fault check is stopped.

[Probable cause of trouble]
- Open-circuit of harness between electronic control unit and MPROP (rail pressure control valve)
- Malfunction of each connector
- Malfunction of MPROP (rail pressure control valve)
- Malfunction of electronic control unit

[Recoverability]
- Recovered if signal becomes normal when starter switch is turned OFF to ON (power supply resumed to electronic control unit).
  (Warning lamp is extinguished and diagnosis code is cleared at fourth display of diagnosis code after recovery.)

[Electronic Control Unit Connection Diagram]

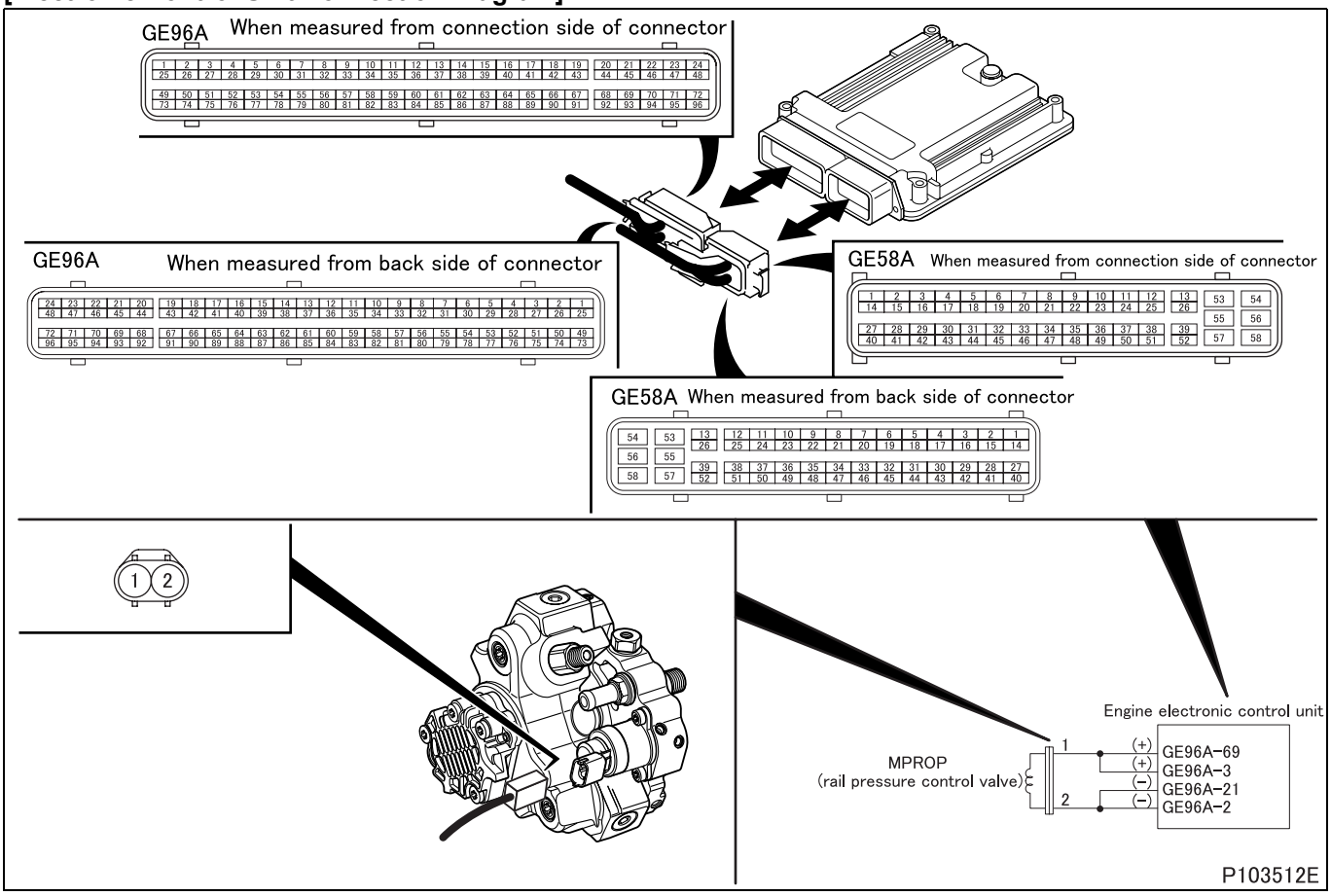

[Parts Identification and Location]

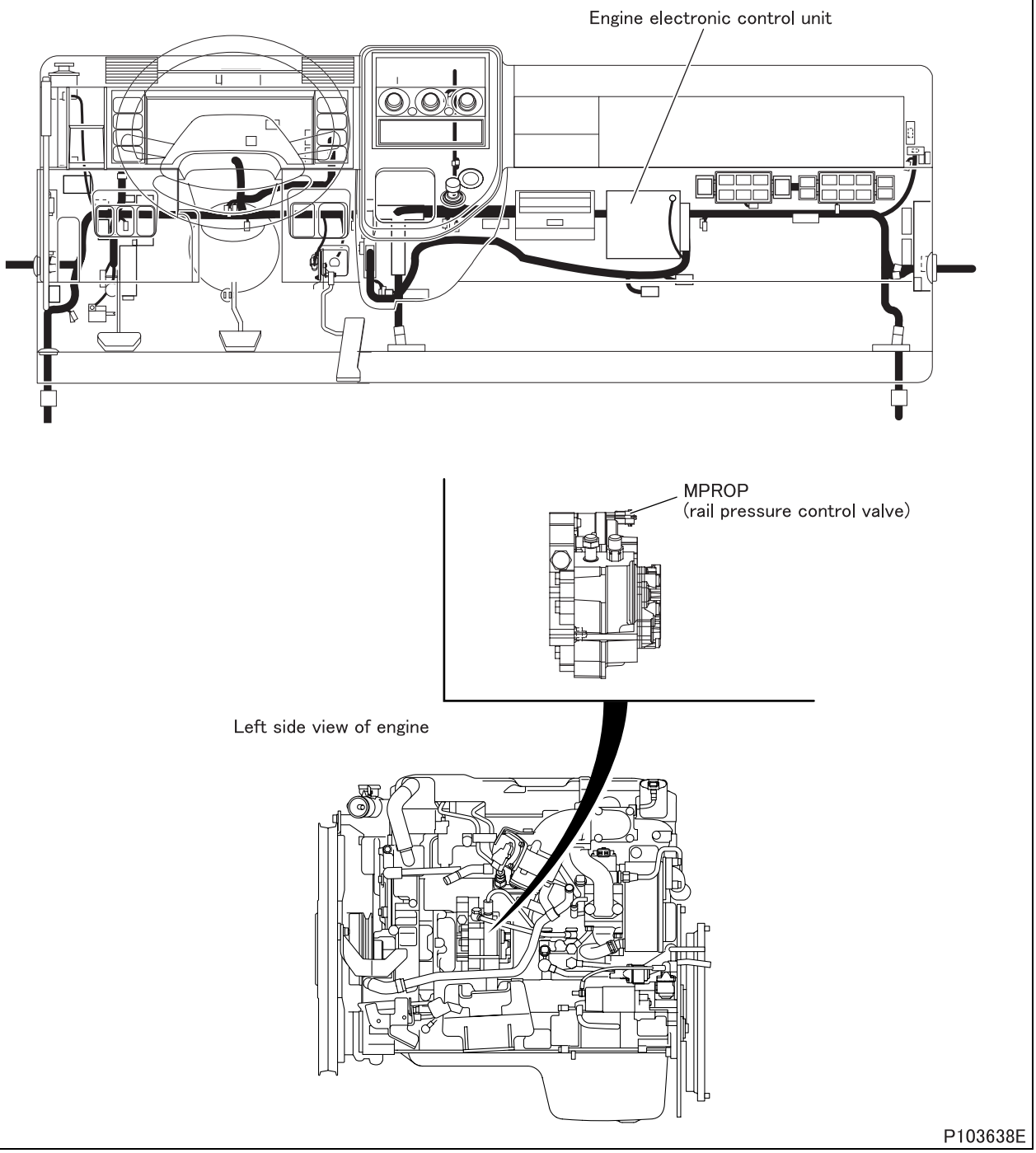

[Fault diagnosis]

- Perform checks in the sequence of the following steps.

Step 1	Inspection items		Inspection by electronic control unit connector
	Maintenance item		Measure value of resistance between connector (GE96A) terminal No. 3 or No. 69 and No. 2 or No. 21.
	Inspection condition		Disconnect electronic control unit and harness, and measure from connection side of harness connector.
	Requirements		2.6 to 3.15 Ω
	Inspection result (Is the judging standard satisfied?)	YES	Go to transient fault (See Gr00.).
		NO	Go to step 2.

Step 2	Inspection items		Inspection of electronic control unit connector
	Maintenance item		Inspection of connector
	Inspection condition		–
	Requirements		• Connector is properly connected. • No trace of water entry is found. • No corrosion is found in terminal. • Connection to terminal is appropriate.
	Inspection result (Is the judging standard satisfied?)	YES	Go to step 3.
		NO	Modify connector.

Step 3	Inspection items		Inspection of MPROP (rail pressure control valve) connector
	Maintenance item		Inspection of connector
	Inspection condition		–
	Requirements		• Connector is properly connected. • No trace of water entry is found. • No corrosion is found in terminal. • Connection to terminal is appropriate.
	Inspection result (Is the judging standard satisfied?)	YES	Replacement of supply pump
		NO	Modify connector.

[Fault code]
Diagnosis code: P0091/Flash code: 63
[Monitor]
Failure of MPROP (rail pressure control valve)
[Fault (outline)]
MPROP (rail pressure control valve) short circuit
[Diagnosis check]
- Engine electronic control unit internal function monitors MPROP (rail pressure control valve) for short-circuit to ground.

[Code generation condition]
- MPROP circuit remains shorted to ground as detected by engine electronic control unit internal function for 0.3 second. (Warning lamp is lit and diagnosis code is displayed on first establishment of code generation condition.)

[Diagnosis check timing]
- Fault diagnosis is continuously performed during the driving cycle.

[Diagnostic requirement]
–

[Control effected by electronic control unit during fault]
- Engine torque is limited.
- MPROP (rail pressure control valve) control is stopped.
- Exhaust gas recirculation control is stopped.
- Throttle controls disabled
- Misfire detection is stopped.
- Auto cruise control stopped
- Traction control is stopped <Automatic transmission>
- Diesel particulate filter regeneration is stopped.
- Related fault check is stopped.

[Probable cause of trouble]
- Open-circuit or short-circuit of harness between electronic control unit and MPROP (rail pressure control valve)
- Malfunction of each connector
- Malfunction of MPROP (rail pressure control valve)
- Malfunction of electronic control unit

[Recoverability]
- Recovered if signal becomes normal when starter switch is turned OFF to ON (power supply resumed to electronic control unit).
  (Warning lamp is extinguished and diagnosis code is cleared at fourth display of diagnosis code after recovery.)

[Electronic Control Unit Connection Diagram]

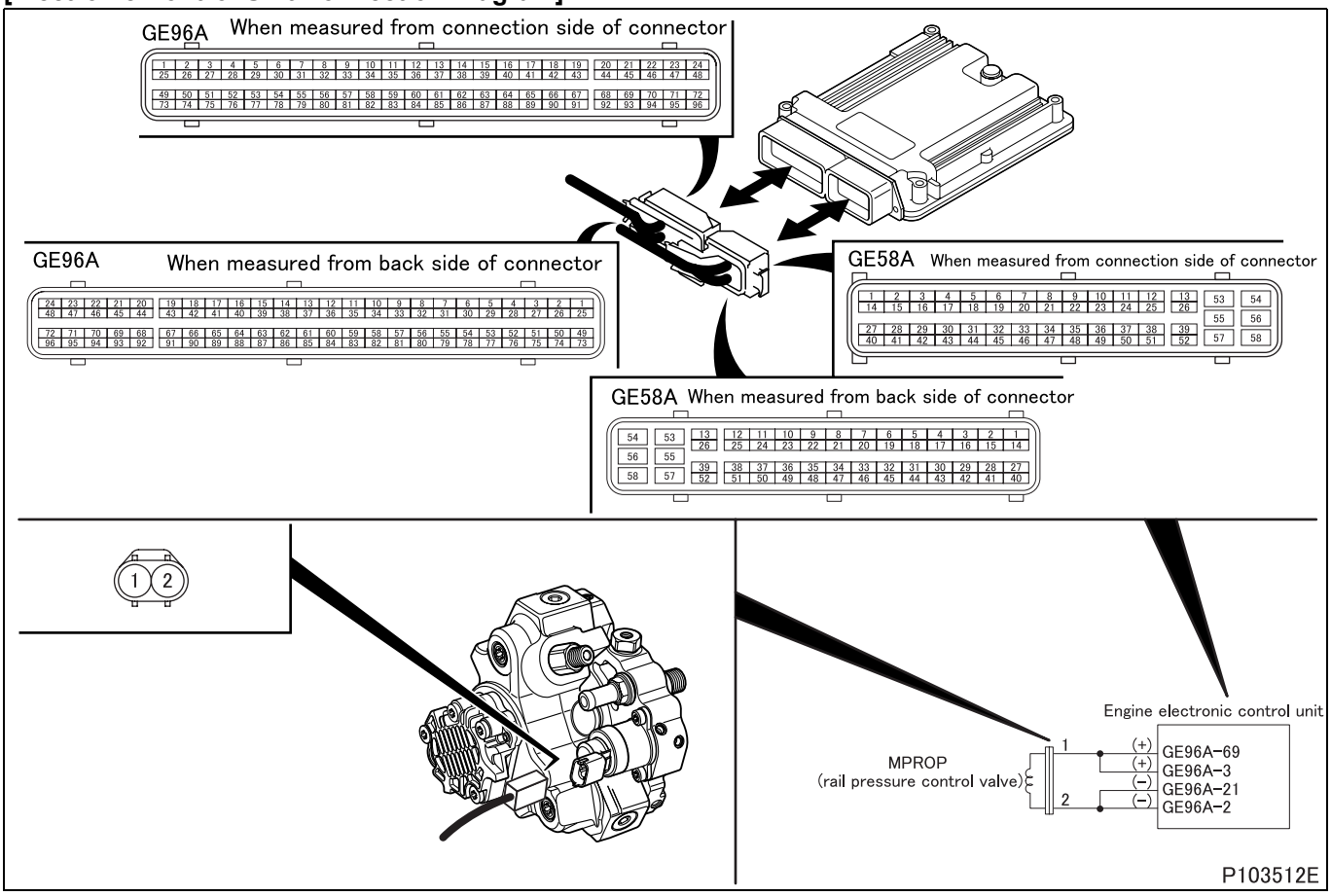

[Parts Identification and Location]

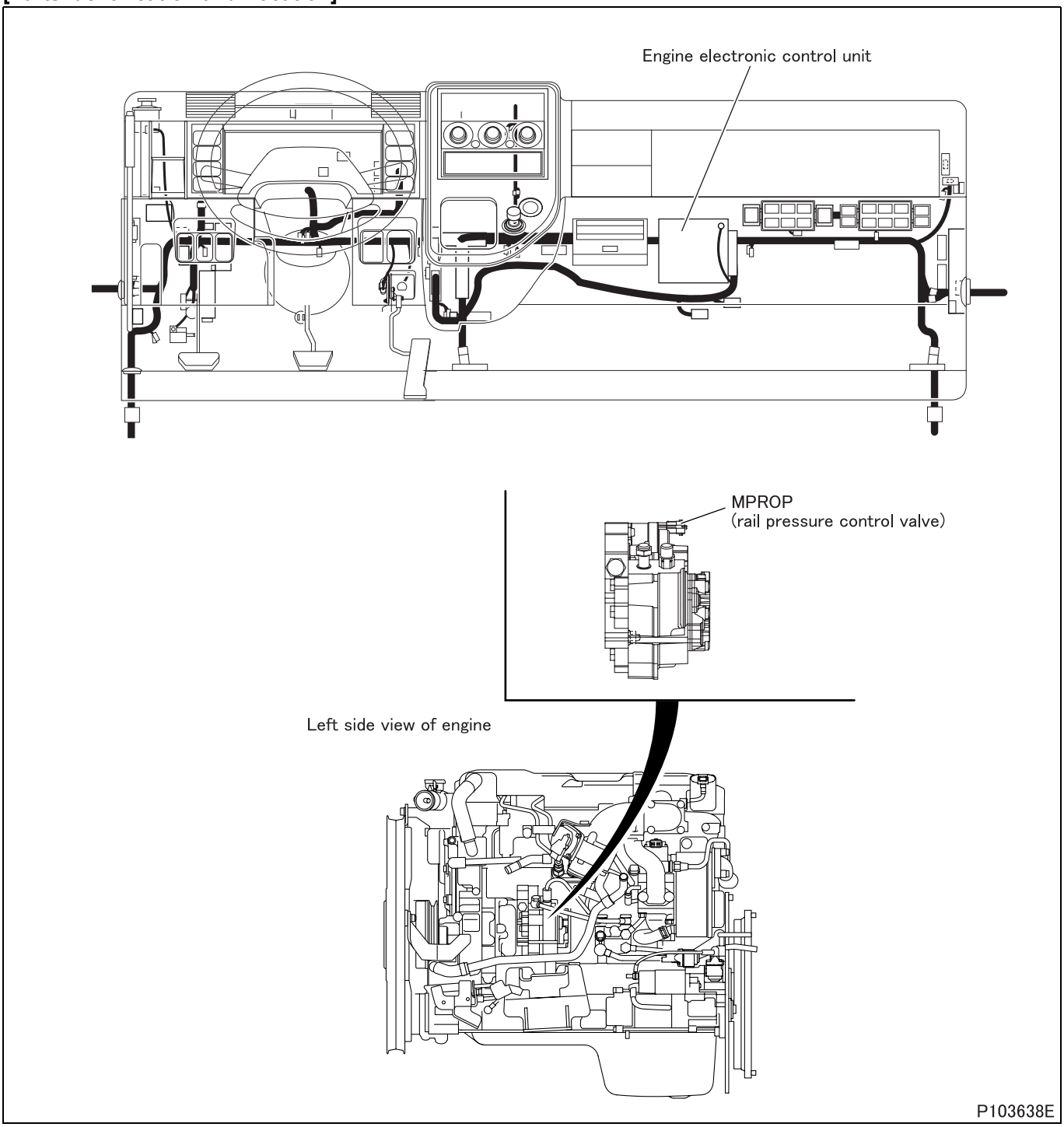

[Fault diagnosis]

- Perform checks in the sequence of the following steps.

Step 1	Inspection items		Inspection by electronic control unit connector
	Maintenance item		Measure value of resistance between connector (GE96A) terminal No. 3 or No. 69 and No. 2 or No. 21.
	Inspection condition		Disconnect electronic control unit and harness, and measure from connection side of harness connector.
	Requirements		2.6 to 3.15 Ω
	Inspection result (Is the judging standard satisfied?)	YES	Go to transient fault (See Gr00.).
		NO	Go to step 2.

Step 2	Inspection items		Inspection of electronic control unit connector
	Maintenance item		Inspection of connector
	Inspection condition		–
	Requirements		• Connector is properly connected. • No trace of water entry is found. • No corrosion is found in terminal. • Connection to terminal is appropriate.
	Inspection result (Is the judging standard satisfied?)	YES	Go to step 3.
		NO	Modify connector.

Step 3	Inspection items		Inspection of MPROP (rail pressure control valve) connector
	Maintenance item		Inspection of connector
	Inspection condition		–
	Requirements		• Connector is properly connected. • No trace of water entry is found. • No corrosion is found in terminal. • Connection to terminal is appropriate.
	Inspection result (Is the judging standard satisfied?)	YES	Replacement of supply pump
		NO	Modify connector.

[Fault code]
Diagnosis code: P0092/Flash code: 63
[Monitor]
Failure of MPROP (rail pressure control valve)
[Fault (outline)]
MPROP (rail pressure control valve) short circuit
[Diagnosis check]
- Engine electronic control unit internal function monitors MPROP (rail pressure control valve) for short-circuit to power supply.

[Code generation condition]
- MPROP circuit remains shorted to power supply as detected by engine electronic control unit internal function for 0.3 second.
  (Warning lamp is lit and diagnosis code is displayed on first establishment of code generation condition.)

[Diagnosis check timing]
- Fault diagnosis is continuously performed during the driving cycle.

[Diagnostic requirement]
–

[Control effected by electronic control unit during fault]
- Engine torque is limited.
- MPROP (rail pressure control valve) control is stopped.
- Exhaust gas recirculation control is stopped.
- Throttle controls disabled
- Misfire detection is stopped.
- Auto cruise control stopped
- Traction control is stopped <Automatic transmission>
- Diesel particulate filter regeneration is stopped.
- Related fault check is stopped.

[Probable cause of trouble]
- Open-circuit or short-circuit of harness between electronic control unit and MPROP (rail pressure control valve)
- Malfunction of each connector
- Malfunction of MPROP (rail pressure control valve)
- Malfunction of electronic control unit

[Recoverability]
- Recovered if signal becomes normal when starter switch is turned OFF to ON (power supply resumed to electronic control unit).
  (Warning lamp is extinguished and diagnosis code is cleared at fourth display of diagnosis code after recovery.)

[Electronic Control Unit Connection Diagram]

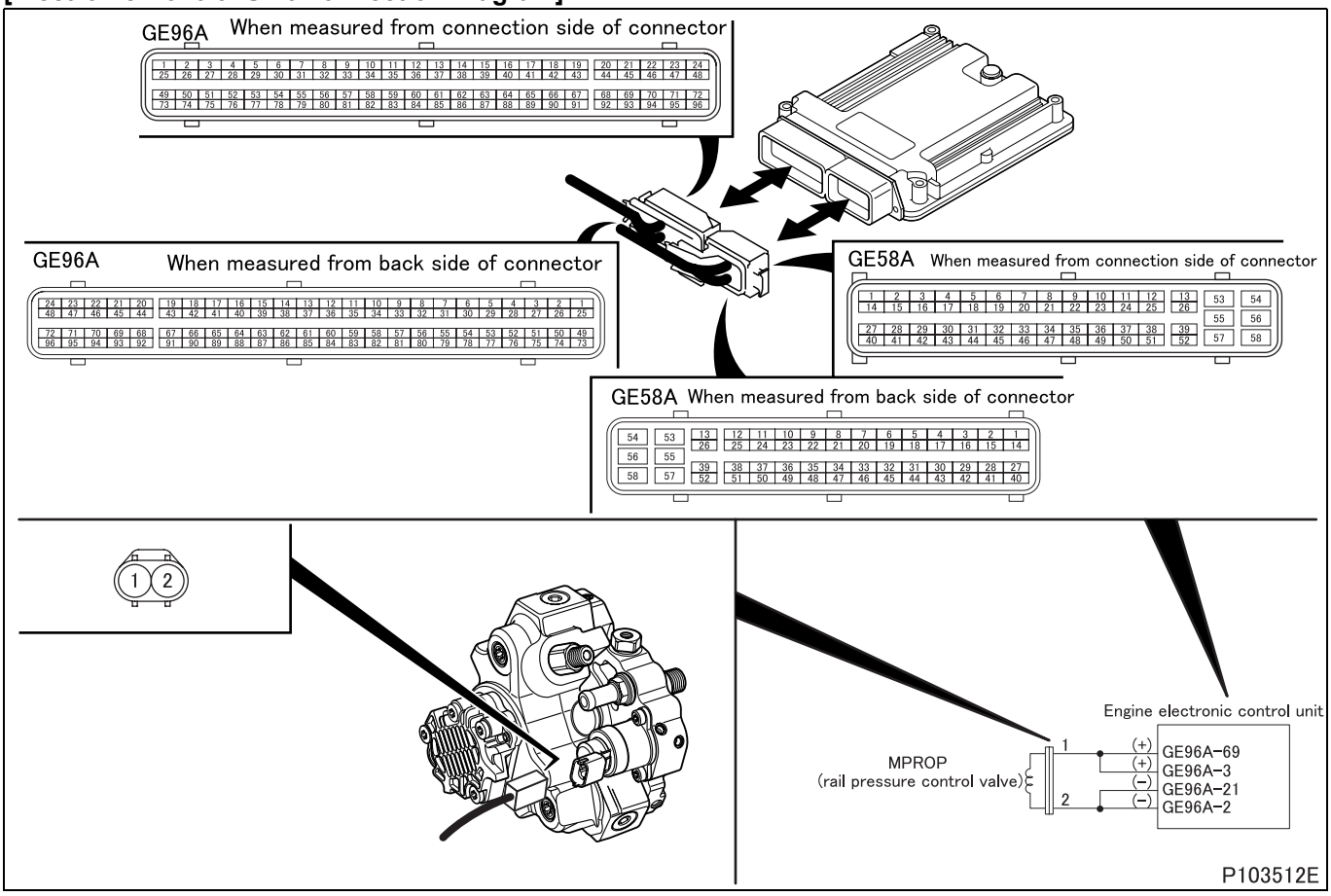

[Parts Identification and Location]

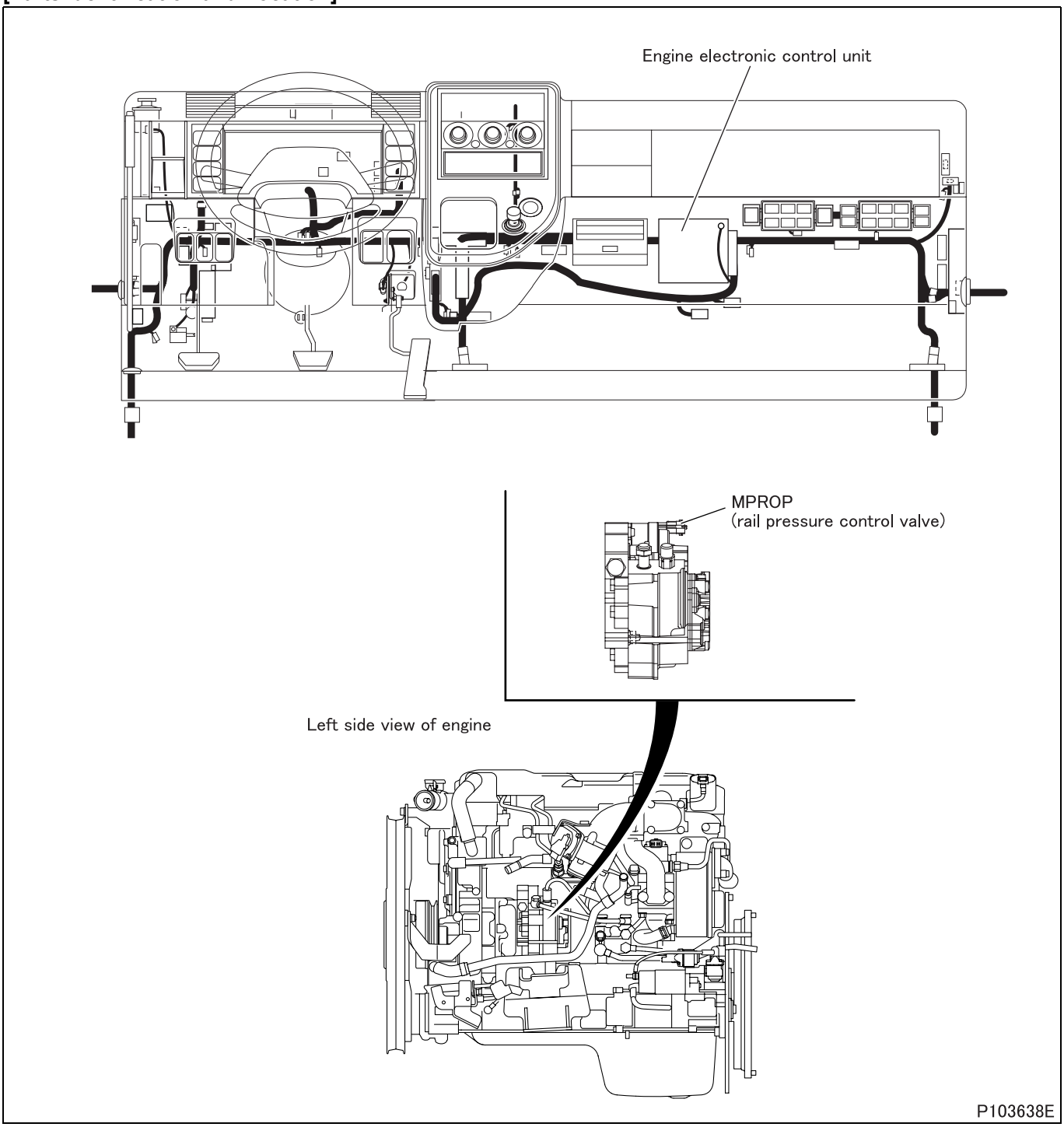

[Fault diagnosis]

- Perform checks in the sequence of the following steps.

Step 1	Inspection items		Inspection by electronic control unit connector
	Maintenance item		Measure value of resistance between connector (GE96A) terminal No. 3 or No. 69 and No. 2 or No. 21.
	Inspection condition		Disconnect electronic control unit and harness, and measure from connection side of harness connector.
	Requirements		2.6 to 3.15 Ω
	Inspection result (Is the judging standard satisfied?)	YES	Go to transient fault (See Gr00.).
		NO	Go to step 2.

Step 2	Inspection items		Inspection of electronic control unit connector
	Maintenance item		Inspection of connector
	Inspection condition		–
	Requirements		• Connector is properly connected. • No trace of water entry is found. • No corrosion is found in terminal. • Connection to terminal is appropriate.
	Inspection result (Is the judging standard satisfied?)	YES	Go to step 3.
		NO	Modify connector.

Step 3	Inspection items		Inspection of MPROP (rail pressure control valve) connector
	Maintenance item		Inspection of connector
	Inspection condition		–
	Requirements		• Connector is properly connected. • No trace of water entry is found. • No corrosion is found in terminal. • Connection to terminal is appropriate.
	Inspection result (Is the judging standard satisfied?)	YES	Replacement of supply pump
		NO	Modify connector.

[Fault code]
Diagnosis code: P0093/Flash code: 22
[Monitor]
Abnormality of common rail pressure (fuel leakage)
[Fault (outline)]
Fuel leakage
[Diagnosis check]
- Common rail pressure is monitored during at-fault control (diagnosis code P0087).

[Code generation condition]
- Actual common rail pressure remains 300 bar apart from target common rail pressure for 60 seconds in spite of full supply pump output.
  (Warning lamp is lit and diagnosis code is displayed on first establishment of code generation condition.)

[Diagnosis check timing]
- Fault diagnosis is performed only once during the driving cycle.

[Diagnostic requirement]
–

[Control effected by electronic control unit during fault]
- Engine stopped

[Probable cause of trouble]
- Malfunction of supply pump
- Malfunction of pressure limiter
- Airtight malfunction of injector
- Plugged fuel system
- Fuel leakage
- Malfunction of common rail pressure sensor

[Recoverability]
- Recovered if signal becomes normal when starter switch is turned OFF to ON (power supply resumed to electronic control unit).
  (At the same time as recovery, warning lamp is extinguished and diagnosis code is cleared.)

[Fault diagnosis]

- Perform checks in the sequence of the following steps.

Step 1	Inspection items		Inspection by control data
	Maintenance item		Check if following diagnosis codes occur simultaneously. • P0093 “CRS (Fuel Leak)” • P0148 “CRS (Fuel Delivery)” • P0191 “CRS Pressure SNSR (Plausibility)” • P0192 “CRS Pressure SNSR (Low)” • P0193 “CRS Pressure SNSR (High)” • P0201 “Injector M/V-Cylinder 1 (Load)” • P0202 “Injector M/V-Cylinder 2 (Load)” • P0203 “Injector M/V-Cylinder 3 (Load)” • P0204 “Injector M/V-Cylinder 4 (Load)” • P0261 “Injector #1-A (Low)” • P0262 “Injector #1-A (High)” • P0263 “Injector #1-A (Plausibility)” • P0264 “Injector #2-A (Low)” • P0265 “Injector #2-A (High)” • P0266 “Injector #2-A (Plausibility)” • P0267 “Injector #3-A (Low)” • P0268 “Injector #3-A (High)” • P0269 “Injector #3-A (Plausibility)” • P0270 “Injector #4-A (Low)” • P0271 “Injector #4-A (High)” • P0272 “Injector #4-A (Plausibility)” • P0562 “Power Supply Voltage (Low)” • P0563 “Power Supply Voltage (High)” • P0607 “ECU System” • P060B “A/D Converter” • P061B “ECU Performance (Calc)” • P061C “ECU Performance (Ne)”
	Inspection condition		• Starter switch: ON • Do not start engine.
	Requirements		No codes occur.
	Inspection result (Is the judging standard satisfied?)	YES	Go to step 2.
		NO	Inspect diagnosis code that is occurring.

Step 2	Inspection items		Checking of engine appearance
	Maintenance item		Check fuel system for fuel leak.
	Inspection condition		Starter switch: OFF
	Requirements		There is fuel leak.
	Inspection result (Is the judging standard satisfied?)	YES	Correct and replace wet or abnormal parts.
		NO	Go to step 3.

Step 3	Inspection items		Inspection of low pressure piping (fuel tank – supply pump)
	Maintenance item		Check suction pipe or hose for bend.
	Inspection condition		Starter switch: OFF
	Requirements		There is no bend on pipe or hose.
	Inspection result (Is the judging standard satisfied?)	YES	Go to step 4.
		NO	Correct and replace suction pipe or hose.

Step 4	Inspection items		Checking of air bleeding
	Maintenance item		Bleed air from fuel filter.
	Inspection condition		Starter switch: OFF
	Requirements		Problem is solved by bleeding air.
	Inspection result (Is the judging standard satisfied?)	YES	–
		NO	Go to step 5.

Step 5	Inspection items		Inspection of low pressure piping
	Maintenance item		Fuel filter
	Inspection condition		Starter switch: OFF
	Requirements		Problem is solved by replacing fuel filter.
	Inspection result (Is the judging standard satisfied?)	YES	–
		NO	Go to step 6.

Step 6	Inspection items		Check inside of combustion chamber.
	Maintenance item		Check for fuel leak.
	Inspection condition		• After performing actuator test item No. B2 “Fuel Leak Check”, stop engine. • Remove glow plug, and check from glow plug mounting hole using bore scope.
	Requirements		Inside of combustion chamber is not wet.
	Inspection result (Is the judging standard satisfied?)	YES	Replacement of supply pump
		NO	Replacement of injector of object cylinder

[Fault code]
Diagnosis code: P0097/Flash code: 9
[Monitor]
Failure of boost air temperature sensor
[Fault (outline)]
Low signal range check
[Diagnosis check]
- Boost air temperature sensor output voltage is monitored.

[Code generation condition]
- Output voltage of boost air temperature sensor remains below 0.2 V for 1 second. (sensor temperature: 146°C {295°F} or higher)
  (Warning lamp is lit and diagnosis code is displayed on third establishment of code generation condition.)

[Diagnosis check timing]
- Fault diagnosis is continuously performed during the driving cycle.

[Diagnostic requirement]
–

[Control effected by electronic control unit during fault]
- Exhaust gas recirculation gas temperature is fixed at backup value.
- Exhaust gas recirculation control is stopped.
- Throttle controls disabled
- Related fault check is stopped.

[Probable cause of trouble]
- Open-circuit or short-circuit of harness between electronic control unit and boost air temperature sensor
- Malfunction of each connector
- Malfunction of sensor
- Malfunction of electronic control unit

[Recoverability]
- Recovered if signal becomes normal with starter switch in ON position.
  (Warning lamp is extinguished and diagnosis code is cleared at fourth display of diagnosis code after recovery.)

[Electronic Control Unit Connection Diagram]

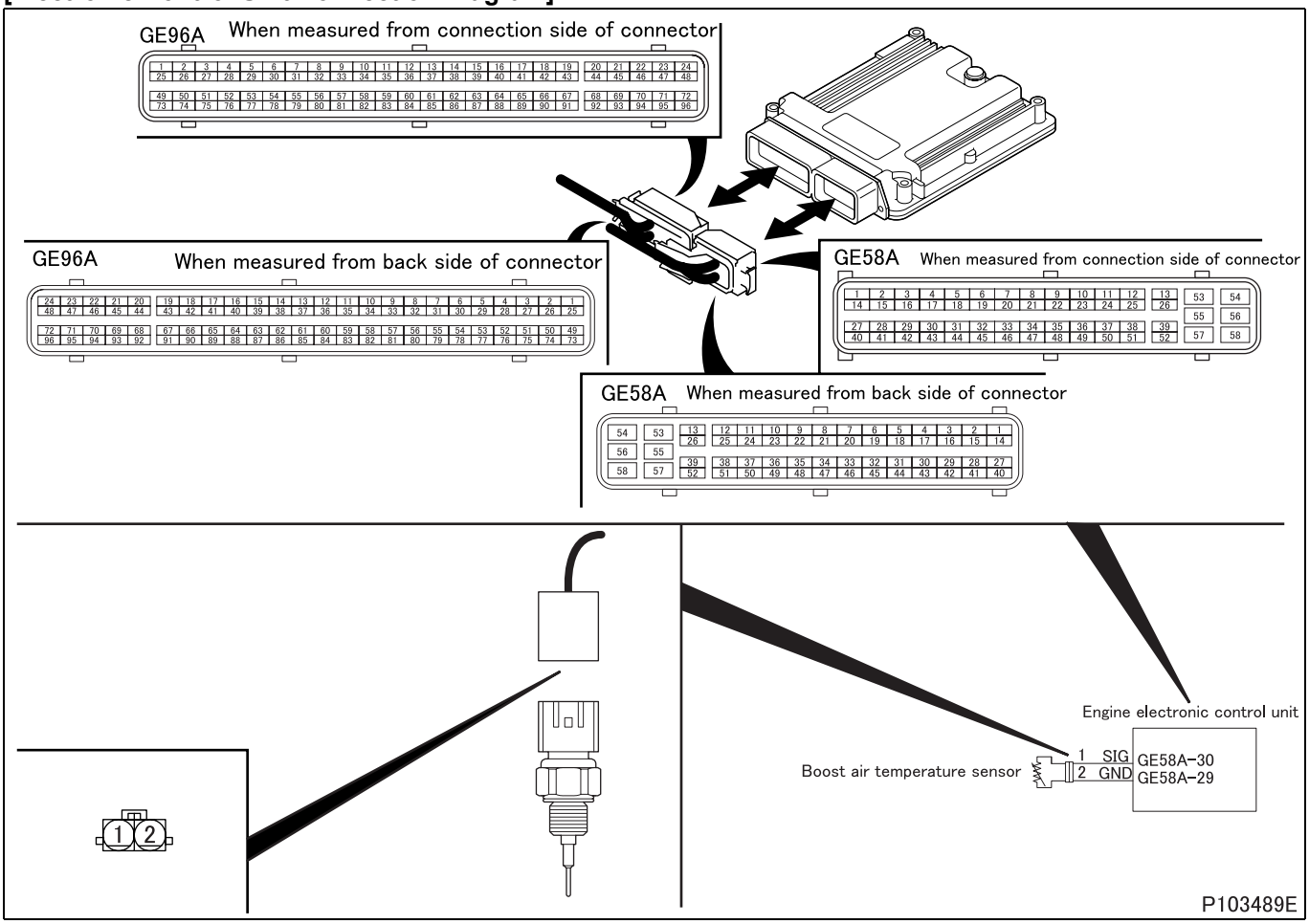

[Parts Identification and Location]

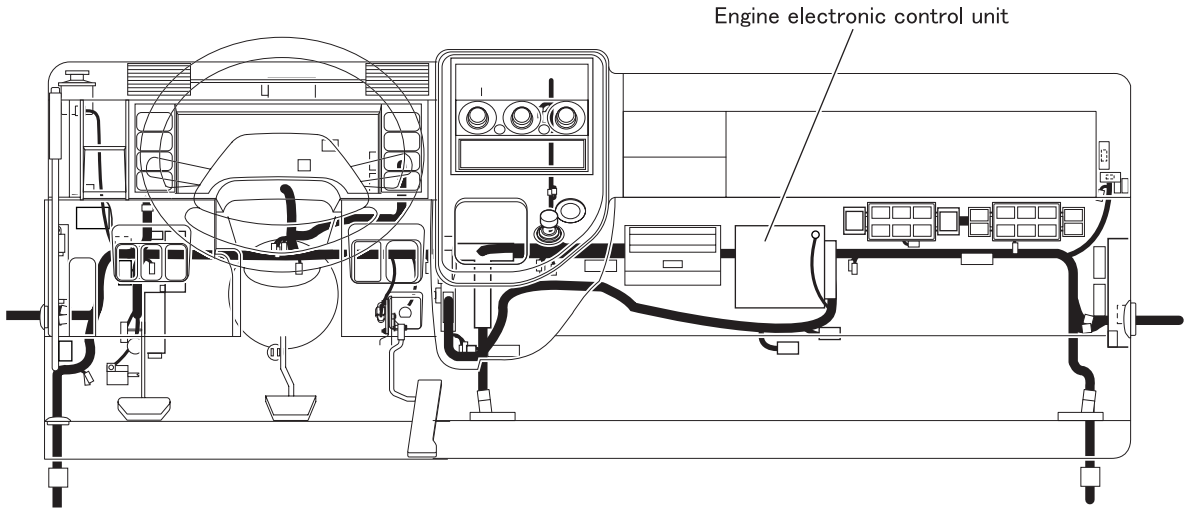

Upper view of engine

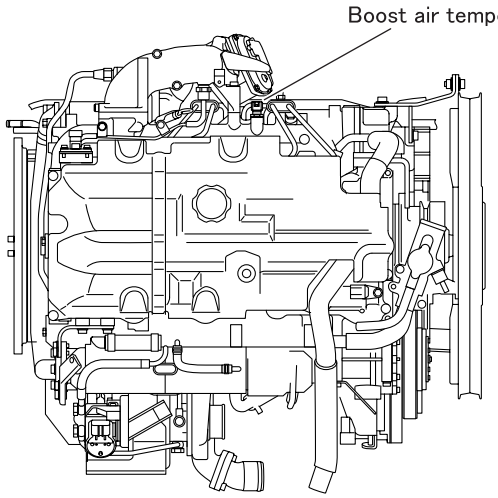

P103617E

[Fault diagnosis]

- Perform checks in the sequence of the following steps.

Step 1	Inspection items		Inspection by control data
	Maintenance item		**<General Scanning Tool used>** • Measure item “Intake Air Temperature”. **<Multi-Use Tester used>** • Measure item No. 10 “Intake Air Temperature (EGR)” of Service Data.
	Inspection condition		–
	Requirements		When engine is cold: Temperature is equivalent to outside temperature.
	Inspection result (Is the judging standard satisfied?)	YES	Go to transient fault (See Gr00.).
		NO	Go to step 2.

Step 2	Inspection items		Inspection by electronic control unit connector
	Maintenance item		Measure value of resistance between connector (GE58A) terminal No. 29 and 30.
	Inspection condition		Disconnect electronic control unit from harness and measure from connection side of harness connector.
	Requirements		• 0°C {32°F}: 162.3 $^{+48.8}_{-36.5}$ kΩ • 20°C {68°F}: 61.47 $^{+15.99}_{-12.35}$ kΩ • 80°C {176°F}: 6.120 $^{+1.095}_{-0.907}$ kΩ
	Inspection result (Is the judging standard satisfied?)	YES	Go to step 3.
		NO	Go to step 4.

Step 3	Inspection items		Inspection of electronic control unit connector
	Maintenance item		Inspection of connector
	Inspection condition		–
	Requirements		• Connector is properly connected. • No trace of water entry is found. • No corrosion is found in terminal. • Connection to terminal is appropriate.
	Inspection result (Is the judging standard satisfied?)	YES	Go to step 8.
		NO	Modify connector.

Step 4	Inspection items		Inspection of boost air temperature sensor connector
	Maintenance item		Inspection of connector
	Inspection condition		–
	Requirements		• Connector is properly connected. • No trace of water entry is found. • No corrosion is found in terminal. • Connection to terminal is appropriate.
	Inspection result (Is the judging standard satisfied?)	YES	Go to step 5.
		NO	Modify connector.

Step 5	Inspection items		Inspection of boost air temperature sensor unit
	Maintenance item		Measure value of resistance between connector terminal No. 1 and 2.
	Inspection condition		• Put boost air temperature sensor in container filled with engine oil. • Heat the oil to each of the specified temperatures. Stir the oil well while doing so.
	Requirements		• 0°C {32°F}: 162.3 $^{+48.8}_{-36.5}$ kΩ • 20°C {68°F}: 61.47 $^{+15.99}_{-12.35}$ kΩ • 80°C {176°F}: 6.120 $^{+1.095}_{-0.907}$ kΩ
	Inspection result (Is the judging standard satisfied?)	YES	Go to step 6.
		NO	Replacement of sensor

<Step 5 inspection diagram>

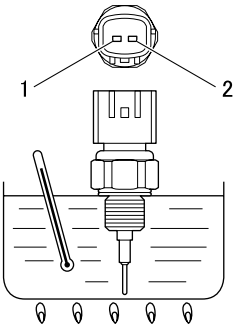

Step 6	Inspection items		Inspection of harness between electronic control unit and sensor (power supply)
	Maintenance item		Check circuit between sensor connector terminal No. 1 and electronic control unit connector (GE58A) terminal No. 30.
	Inspection condition		Disconnect each device from harness and measure from connection side of harness connector.
	Requirements		There is continuity.
	Inspection result (Is the judging standard satisfied?)	YES	Go to step 7.
		NO	Modify harness.

Step 7	Inspection items		Inspection of harness between electronic control unit and sensor (ground)
	Maintenance item		Check circuit between sensor connector terminal No. 2 and electronic control unit connector (GE58A) terminal No. 29.
	Inspection condition		Disconnect each device from harness and measure from connection side of harness connector.
	Requirements		There is continuity.
	Inspection result (Is the judging standard satisfied?)	YES	Go to step 8.
		NO	Modify harness.

Step 8	Inspection items		Inspection by control data
	Maintenance item		**<General Scanning Tool used>** • Measure item “Intake Air Temperature”. **<Multi-Use Tester used>** • Measure item No. 10 “Intake Air Temperature (EGR)” of Service Data.
	Inspection condition		–
	Requirements		When engine is cold: Temperature is equivalent to outside temperature.
	Inspection result (Is the judging standard satisfied?)	YES	Go to transient fault (See Gr00.).
		NO	Replacement of electronic control unit

[Fault code]
Diagnosis code: P0098/Flash code: 9
[Monitor]
Failure of boost air temperature sensor
[Fault (outline)]
High signal range check
[Diagnosis check]
- Boost air temperature sensor output voltage is monitored.

[Code generation condition]
- Output voltage of boost air temperature sensor remains over 4.9 V for 1 second. (sensor temperature: –37°C {–34.6°F} or lower)
  (Warning lamp is lit and diagnosis code is displayed on third establishment of code generation condition.)

[Diagnosis check timing]
- Fault diagnosis is continuously performed during the driving cycle.

[Diagnostic requirement]
–

[Control effected by electronic control unit during fault]
- Exhaust gas recirculation gas temperature is fixed at backup value.
- Exhaust gas recirculation control is stopped.
- Throttle controls disabled
- Particulate matter deposit computation is stopped.
- Related fault check is stopped.

[Probable cause of trouble]
- Open-circuit or short-circuit of harness between electronic control unit and boost air temperature sensor
- Malfunction of each connector
- Malfunction of sensor
- Malfunction of electronic control unit

[Recoverability]
- Recovered if signal becomes normal with starter switch in ON position.
  (Warning lamp is extinguished and diagnosis code is cleared at fourth display of diagnosis code after recovery.)

[Electronic Control Unit Connection Diagram]

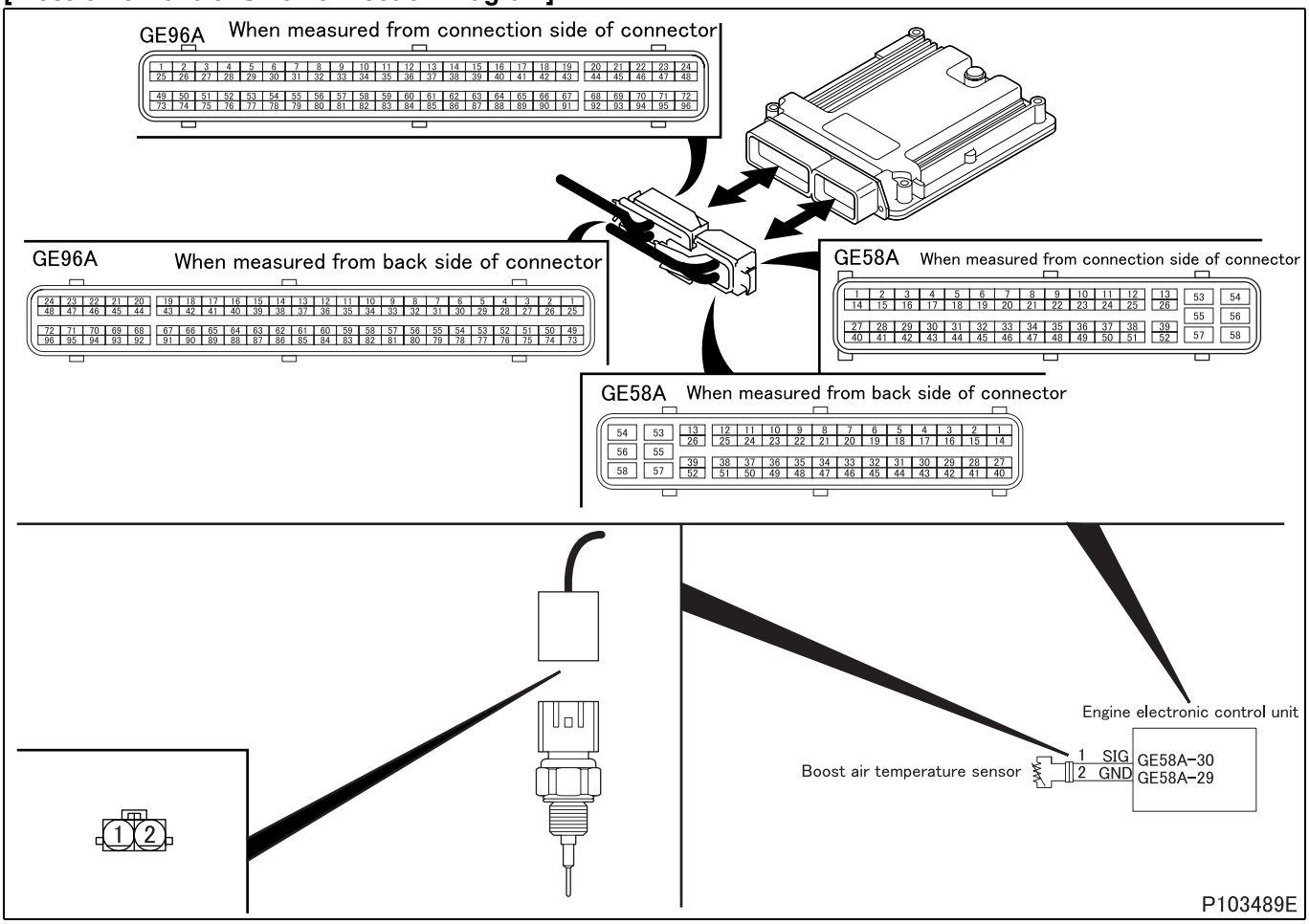

[Parts Identification and Location]

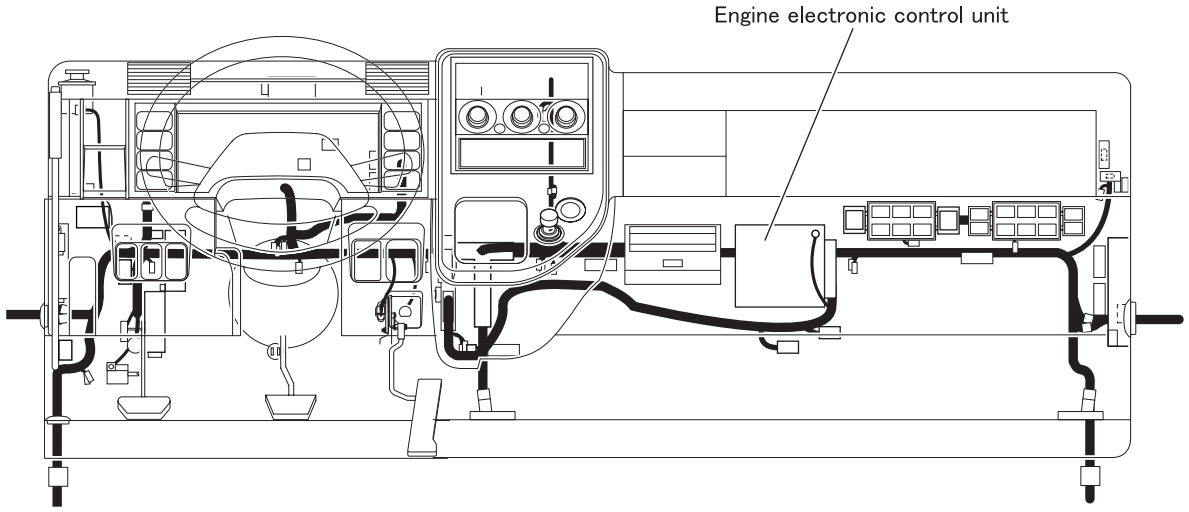

Upper view of engine

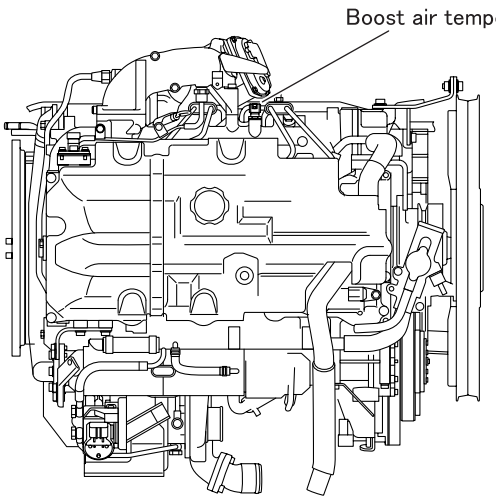

P103617E

[Fault diagnosis]

- Perform checks in the sequence of the following steps.

Step 1	Inspection items		Inspection by control data
	Maintenance item		**<General Scanning Tool used>** • Measure item “Intake Air Temperature”. **<Multi-Use Tester used>** • Measure item No. 10 “Intake Air Temperature (EGR)” of Service Data.
	Inspection condition		–
	Requirements		When engine is cold: Temperature is equivalent to outside temperature.
	Inspection result (Is the judging standard satisfied?)	YES	Go to transient fault (See Gr00.).
		NO	Go to step 2.

Step 2	Inspection items		Inspection by electronic control unit connector
	Maintenance item		Measure value of resistance between connector (GE58A) terminal No. 29 and 30.
	Inspection condition		Disconnect electronic control unit from harness and measure from connection side of harness connector.
	Requirements		• 0°C {32°F}: 162.3 $^{+48.8}_{-36.5}$ kΩ • 20°C {68°F}: 61.47 $^{+15.99}_{-12.35}$ kΩ • 80°C {176°F}: 6.120 $^{+1.095}_{-0.907}$ kΩ
	Inspection result (Is the judging standard satisfied?)	YES	Go to step 3.
		NO	Go to step 4.

Step 3	Inspection items		Inspection of electronic control unit connector
	Maintenance item		Inspection of connector
	Inspection condition		–
	Requirements		• Connector is properly connected. • No trace of water entry is found. • No corrosion is found in terminal. • Connection to terminal is appropriate.
	Inspection result (Is the judging standard satisfied?)	YES	Go to step 8.
		NO	Modify connector.

Step 4	Inspection items		Inspection of boost air temperature sensor connector
	Maintenance item		Inspection of connector
	Inspection condition		–
	Requirements		• Connector is properly connected. • No trace of water entry is found. • No corrosion is found in terminal. • Connection to terminal is appropriate.
	Inspection result (Is the judging standard satisfied?)	YES	Go to step 5.
		NO	Modify connector.

Step 5	Inspection items		Inspection of boost air temperature sensor unit
	Maintenance item		Measure value of resistance between connector terminal No. 1 and 2.
	Inspection condition		• Put boost air temperature sensor in container filled with engine oil. • Heat the oil to each of the specified temperatures. Stir the oil well while doing so.
	Requirements		• 0°C {32°F}: 162.3 $^{+48.8}_{-36.5}$ kΩ • 20°C {68°F}: 61.47 $^{+15.99}_{-12.35}$ kΩ • 80°C {176°F}: 6.120 $^{+1.095}_{-0.907}$ kΩ
	Inspection result (Is the judging standard satisfied?)	YES	Go to step 6.
		NO	Replacement of sensor

<Step 5 inspection diagram>

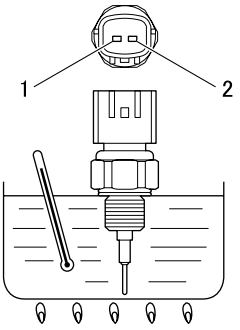

Step 6	Inspection items		Inspection of harness between electronic control unit and sensor (power supply)
	Maintenance item		Check circuit between sensor connector terminal No. 1 and electronic control unit connector (GE58A) terminal No. 30.
	Inspection condition		Disconnect each device from harness and measure from connection side of harness connector.
	Requirements		There is continuity.
	Inspection result (Is the judging standard satisfied?)	YES	Go to step 7.
		NO	Modify harness.

Step 7	Inspection items		Inspection of harness between electronic control unit and sensor (ground)
	Maintenance item		Check circuit between sensor connector terminal No. 2 and electronic control unit connector (GE58A) terminal No. 29.
	Inspection condition		Disconnect each device from harness and measure from connection side of harness connector.
	Requirements		There is continuity.
	Inspection result (Is the judging standard satisfied?)	YES	Go to step 8.
		NO	Modify harness.

Step 8	Inspection items		Inspection by control data
	Maintenance item		**<General Scanning Tool used>** • Measure item “Intake Air Temperature”. **<Multi-Use Tester used>** • Measure item No. 10 “Intake Air Temperature (EGR)” of Service Data.
	Inspection condition		–
	Requirements		When engine is cold: Temperature is equivalent to outside temperature.
	Inspection result (Is the judging standard satisfied?)	YES	Go to transient fault (See Gr00.).
		NO	Replacement of electronic control unit

[Fault code]
Diagnosis code: P0101/Flash code: 17
[Monitor]
Characteristic abnormality in air flow sensor
[Fault (outline)]
Gain and offset drift
[Diagnosis check]
- Intake air flow rate is detected as actual intake air flow rate by air flow sensor and monitored for ratio to target air flow rate for control by engine electronic control unit.

[Code generation condition]
- Difference shows intake air flow rate remains considerably high (1.5 or more) or low (0.6 or less) for 5 seconds. (Warning lamp is lit and diagnosis code is displayed on third establishment of code generation condition.)

[Diagnosis check timing]
- Fault diagnosis is performed only once during the driving cycle.

[Diagnostic requirement]
<When difference in intake air flow rate is abnormally high>
- Engine operating mode: normal (engine in operation)
- Engine speed: 1000 to 3000 rpm
- Fuel injection quantity: less than 100 mg/cyc
- Atmospheric pressure: above 828 mbar {12 psi}
- Boost pressure: less than 2500 mbar {36.25 psi}
- Intake throttle valve opening: 15° to 95°
- Water temperature: 64 to 110°C {147 to 230°F}
- Diesel particulate filter regeneration control: not effected
- Time till above conditions were met: more than 2 seconds
- Air flow sensor: normal in output signal
- Exhaust gas recirculation valve: in order
- Intake throttle: in order
- Turbocharger actuator: in order
- Controller area network communication of each electronic drive unit (exhaust gas recirculation, intake throttle and turbocharger): in order
- Exhaust gas recirculation flow rate and exhaust gas recirculation valve operation: in order
- Atmospheric pressure sensor: in order
- Boost pressure sensor: in order
- Water temperature sensor: in order
- Intake air temperature sensor: in order
- Boost air temperature sensor: in order
- Exhaust gas recirculation cooler: in order
- Sensor 5 V power supply: in order
- Battery voltage: in order
- Injector: in order
- MPROP (rail pressure control valve): in order
- Fuel feed when engine is idling: in order
- Exhaust shutter 3-way magnetic valve: in order

<When difference in intake air flow rate is abnormally low>
- Engine operating mode: normal (engine in operation)
- Engine speed: 1000 to 3000 rpm
- Fuel injection quantity: more than 12 mg/cyc
- Atmospheric pressure: above 828 mbar {12 psi}
- Boost pressure: less than 2500 mbar {36.25 psi}
- Intake throttle valve opening: more than 15°
- Exhaust gas recirculation λ value: 1.2 to 14
- Water temperature: 64 to 110°C {147 to 230°F}
- Diesel particulate filter regeneration control: not effected
- Time till above conditions were met: more than 2 seconds
- Air flow sensor: normal in output signal
- Exhaust gas recirculation valve: in order
- Intake throttle: in order
- Turbocharger actuator: in order
- Controller area network communication of each electronic drive unit (exhaust gas recirculation, intake throttle and turbocharger): in order
- Exhaust gas recirculation flow rate and exhaust gas recirculation valve operation: in order
- Atmospheric pressure sensor: in order
- Boost pressure sensor: in order
- Water temperature sensor: in order
- Intake air temperature sensor: in order
- Boost air temperature sensor: in order
- Exhaust gas recirculation cooler: in order
- Sensor 5 V power supply: in order
- Battery voltage: in order
- Injector: in order
- MPROP (rail pressure control valve): in order
- Fuel feed when engine is idling: in order
- Exhaust shutter 3-way magnetic valve: in order

[Control effected by electronic control unit during fault]
- Intake air flow rate is fixed at backup value.
- Exhaust gas recirculation control is stopped.
- Throttle controls disabled
- Diesel particulate filter regeneration is stopped.
- Particulate matter deposit computation is stopped.
- Related fault check is stopped.

[Probable cause of trouble]
- Open-circuit or short-circuit of harness between electronic control unit and sensor
- Malfunction of each connector
- Malfunction of sensor
- Malfunction of electronic control unit

[Recoverability]
- Recovered if signal becomes normal when starter switch is turned OFF to ON (power supply resumed to electronic control unit).
  (Warning lamp is extinguished and diagnosis code is cleared at fourth display of diagnosis code after recovery.)

[Electronic Control Unit Connection Diagram]

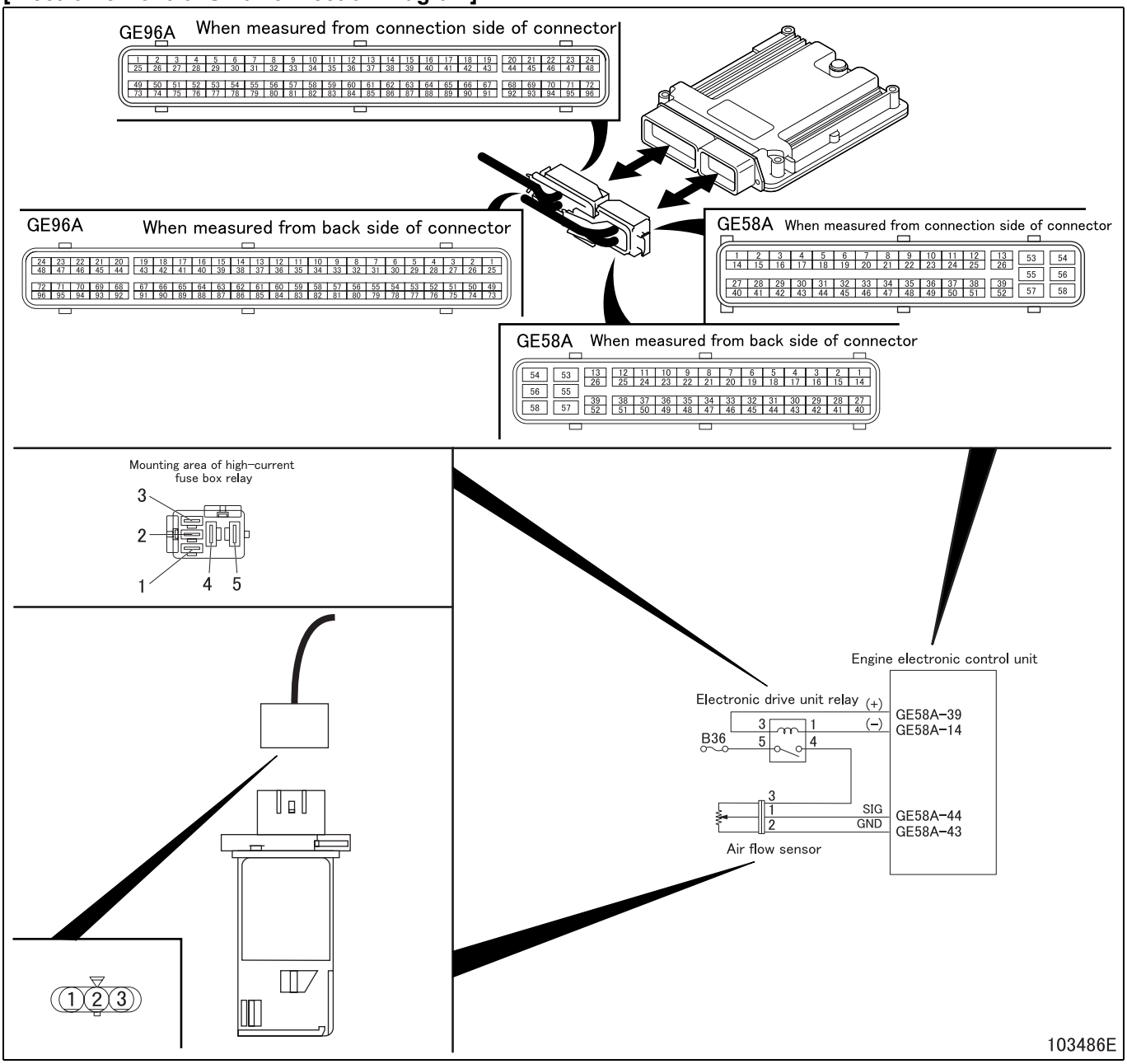

[Parts Identification and Location]

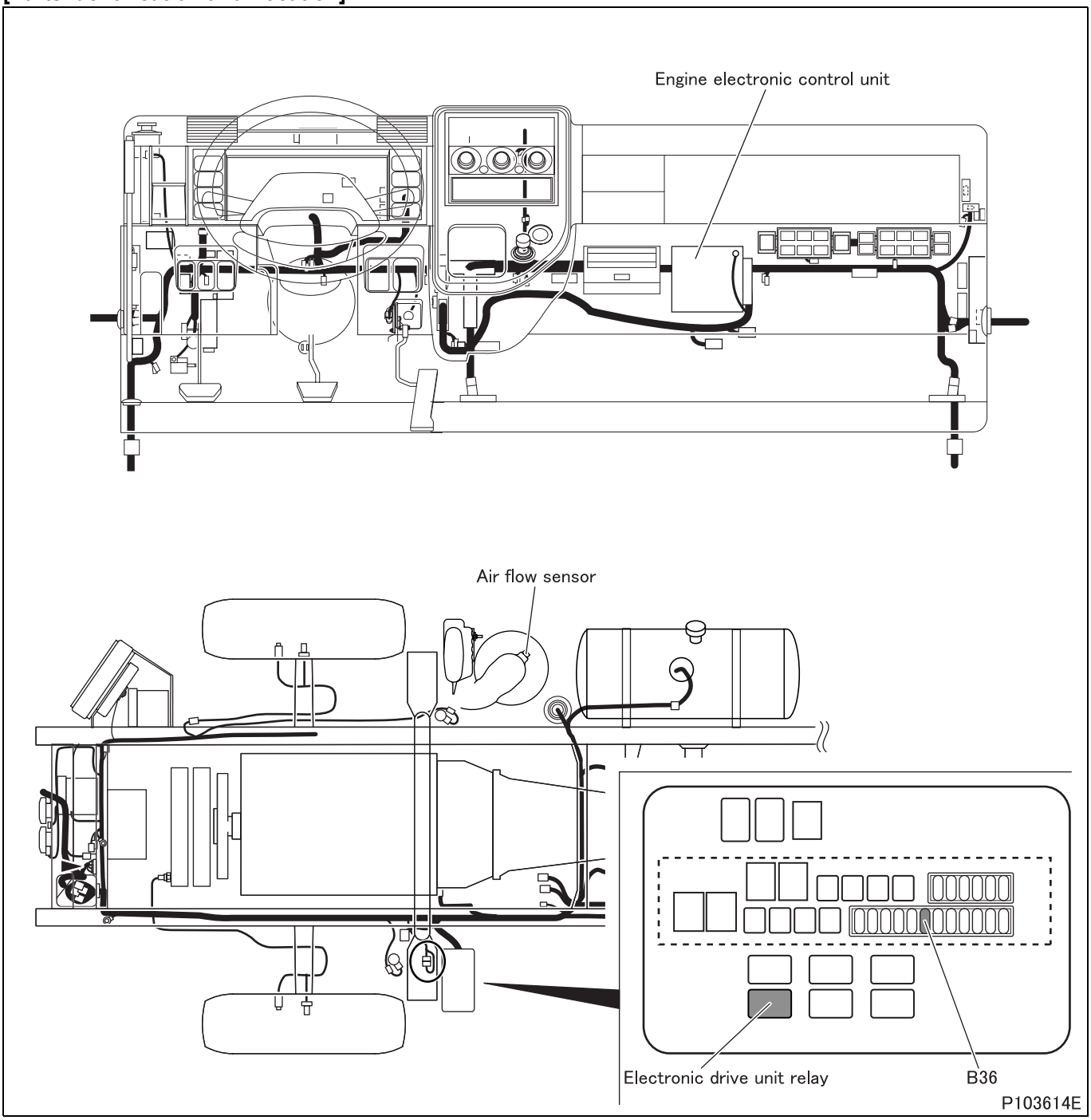

[Fault diagnosis]

- Perform checks in the sequence of the following steps.

Step 1	Inspection items		Inspection by control data
	Maintenance item		Measure item No. 60 “Air mass flow” of Service Data.
	Inspection condition		• Perform actuator test item No. AF “EDU Relay” • Gradually press accelerator pedal.
	Requirements		The numeric value should gradually increase.
	Inspection result (Is the judging standard satisfied?)	YES	Go to transient fault (See Gr00.).
		NO	Go to step 2.

Step 2	Inspection items		Inspection of sensor connector
	Maintenance item		Inspection of connector
	Inspection condition		–
	Requirements		• Connector is properly connected. • No trace of water entry is found. • No corrosion is found in terminal. • Connection to terminal is appropriate.
	Inspection result (Is the judging standard satisfied?)	YES	Go to step 3.
		NO	Modify connector.

Step 3	Inspection items		Inspection by sensor connector (power supply)
	Maintenance item		Measure value of voltage between connector terminal No. 3 (+) and 2 (–).
	Inspection condition		• Measure from back side of connector of harness with each device connected to harness. • Perform actuator test item No. AF “EDU Relay”
	Requirements		12 V
	Inspection result (Is the judging standard satisfied?)	YES	Go to step 6.
		NO	Go to step 4.

Step 4	Inspection items		Inspection of harness between electronic drive unit relay and sensor (power supply)
	Maintenance item		Check circuit between electronic drive unit relay connector terminal No. 4 and sensor connector terminal No. 3.
	Inspection condition		Disconnect each device from harness and measure from connection side of harness connector.
	Requirements		There is continuity.
	Inspection result (Is the judging standard satisfied?)	YES	Go to step 5.
		NO	Modify harness.

Step 5	Inspection items		Inspection of harness between sensor and electronic control unit (ground)
	Maintenance item		Check circuit between sensor connector terminal No. 2 and electronic control unit connector (GE58A) terminal No. 43.
	Inspection condition		Disconnect each device from harness and measure from connection side of harness connector.
	Requirements		There is continuity.
	Inspection result (Is the judging standard satisfied?)	YES	Go to step 6.
		NO	Modify harness.

Step 6	Inspection items		Inspection of harness between sensor and electronic control unit (signal)
	Maintenance item		Check circuit between sensor connector terminal No. 1 and electronic control unit connector (GE58A) terminal No. 44.
	Inspection condition		Disconnect each device from harness and measure from connection side of harness connector.
	Requirements		There is continuity.
	Inspection result (Is the judging standard satisfied?)	YES	Go to step 7.
		NO	Modify harness.

Step 7	Inspection items		Inspection of sensor unit
	Maintenance item		Since inspection of single part is not easy, whether characteristics are deteriorated or not must be checked for the sensor mounted on the current vehicle by measuring and comparing the amount of sensor intake air of the sensor currently mounted on vehicle and that replaced with new one by the service data. **(1) Prepare for inspection** • Clean or replace air cleaner element. • Prepare a new air flow sensor. • Warm up the engine fully. **(2) Measure the intake air of current sensor** • Keep pressing the accelerator pedal until it bottom the stopper bolt from the idling state. (no load maximum rotation) • Measure the following items from among “Service data”. **<General Scanning Tool used>** • Engine speed: “Ne” (rpm) • Intake air flow rate: “Air Flow Rate from MAFS” (g/s) **<Multi-Use Tester used>** • Engine speed: 01 “Engine Revolution” (rpm) • Intake air flow rate: 60 “Air mass flow” (g/s) **(3) Measure the intake air of new sensor** • Replace the currently mounted sensor with a new sensor. • Keep pressing the accelerator pedal until it bottom the stopper bolt from the idling state. (no load maximum rotation) • Measure intake air flow at the same rpm as that of engine revolution in item (2) of “Service data”. **(4) Comparison whether characteristics are deteriorated** • Calculate the characteristics deterioration factor (%) by the following equation. • Characteristics deterioration factor (%) = (intake air of new item – current intake air) × 100/intake air of new item.
	Inspection condition		–
	Requirements		10% or less
	Inspection result (Is the judging standard satisfied?)	YES	Go to step 8.
		NO	Replacement of sensor

Step 8	Inspection items		Inspection by control data
	Maintenance item		Measure item No. 60 “Air mass flow” of Service Data.
	Inspection condition		• Perform actuator test item No. AF “EDU Relay” • Gradually press accelerator pedal.
	Requirements		The numeric value should gradually increase.
	Inspection result (Is the judging standard satisfied?)	YES	Go to transient fault (See Gr00.).
		NO	Replacement of electronic control unit

[Fault code]
Diagnosis code: P0102/Flash code: 17
[Monitor]
Failure of air flow sensor
[Fault (outline)]
Low signal range check
[Diagnosis check]
- Air flow sensor output voltage is monitored.

[Code generation condition]
- Air flow output from air flow sensor remains below 1 kg/hr for 3 seconds.
  (Warning lamp is lit and diagnosis code is displayed on third establishment of code generation condition.)

[Diagnosis check timing]
- Fault diagnosis is continuously performed during the driving cycle.

[Diagnostic requirement]
–

[Control effected by electronic control unit during fault]
- Intake air flow rate is fixed at backup value.
- Exhaust gas recirculation control is stopped.
- Throttle controls disabled
- Diesel particulate filter regeneration is stopped.
- Particulate matter deposit computation is stopped.
- Related fault check is stopped.

[Probable cause of trouble]
- Open-circuit or short-circuit of harness between electronic control unit and relay
- Open-circuit or short-circuit of harness between electronic control unit and sensor
- Open-circuit or short-circuit of harness between electronic drive unit and sensor
- Open-circuit or short-circuit of harness between fuse and relay
- Open-circuit or short-circuit of harness between relay and electronic drive unit
- Malfunction of each connector
- Malfunction of sensor
- Malfunction of relay
- Malfunction of electronic drive unit
- Malfunction of electronic control unit

[Recoverability]
- Recovered if signal becomes normal with starter switch in ON position.
  (Warning lamp is extinguished and diagnosis code is cleared at fourth display of diagnosis code after recovery.)

[Electronic Control Unit Connection Diagram]

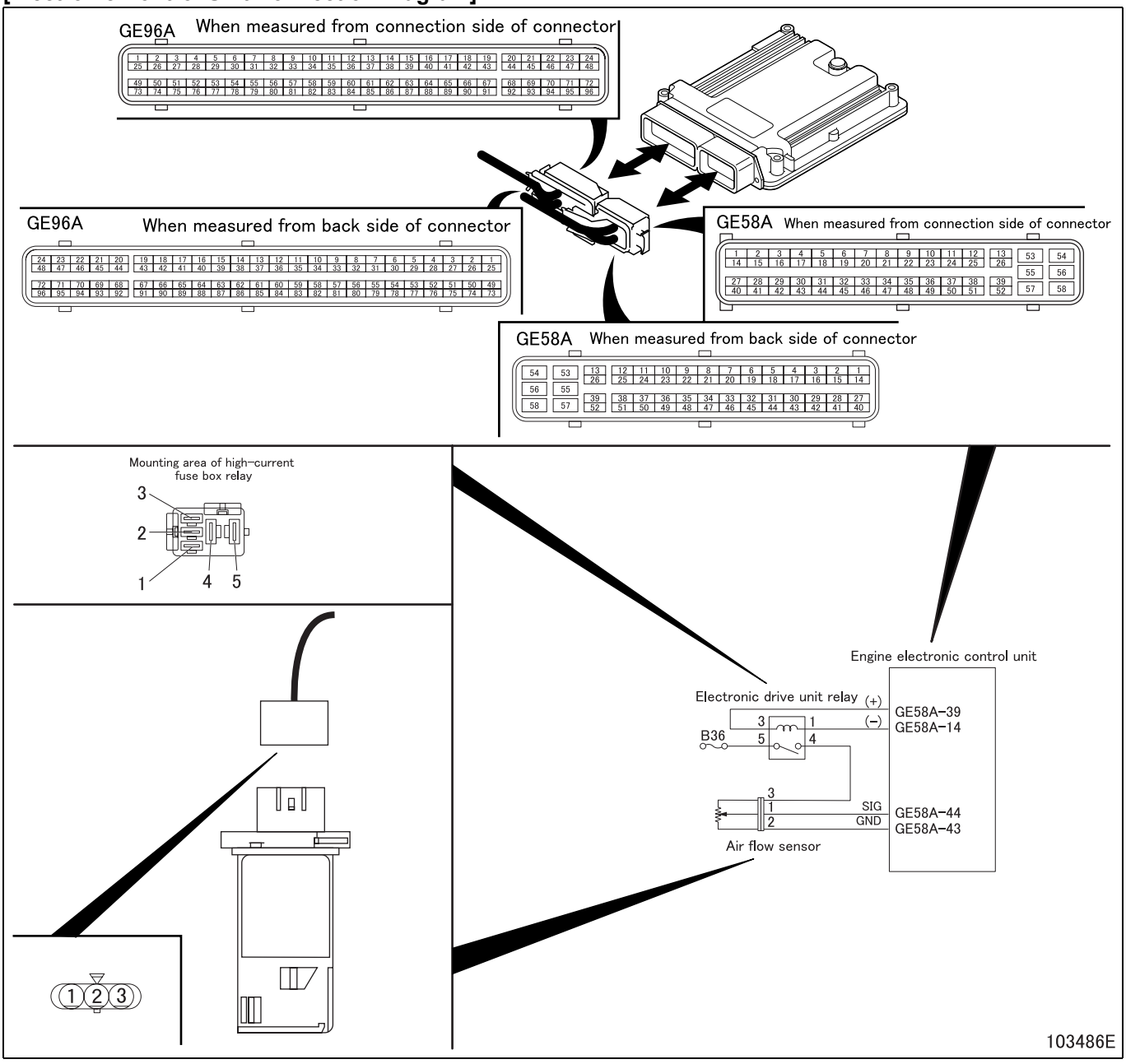

[Parts Identification and Location]

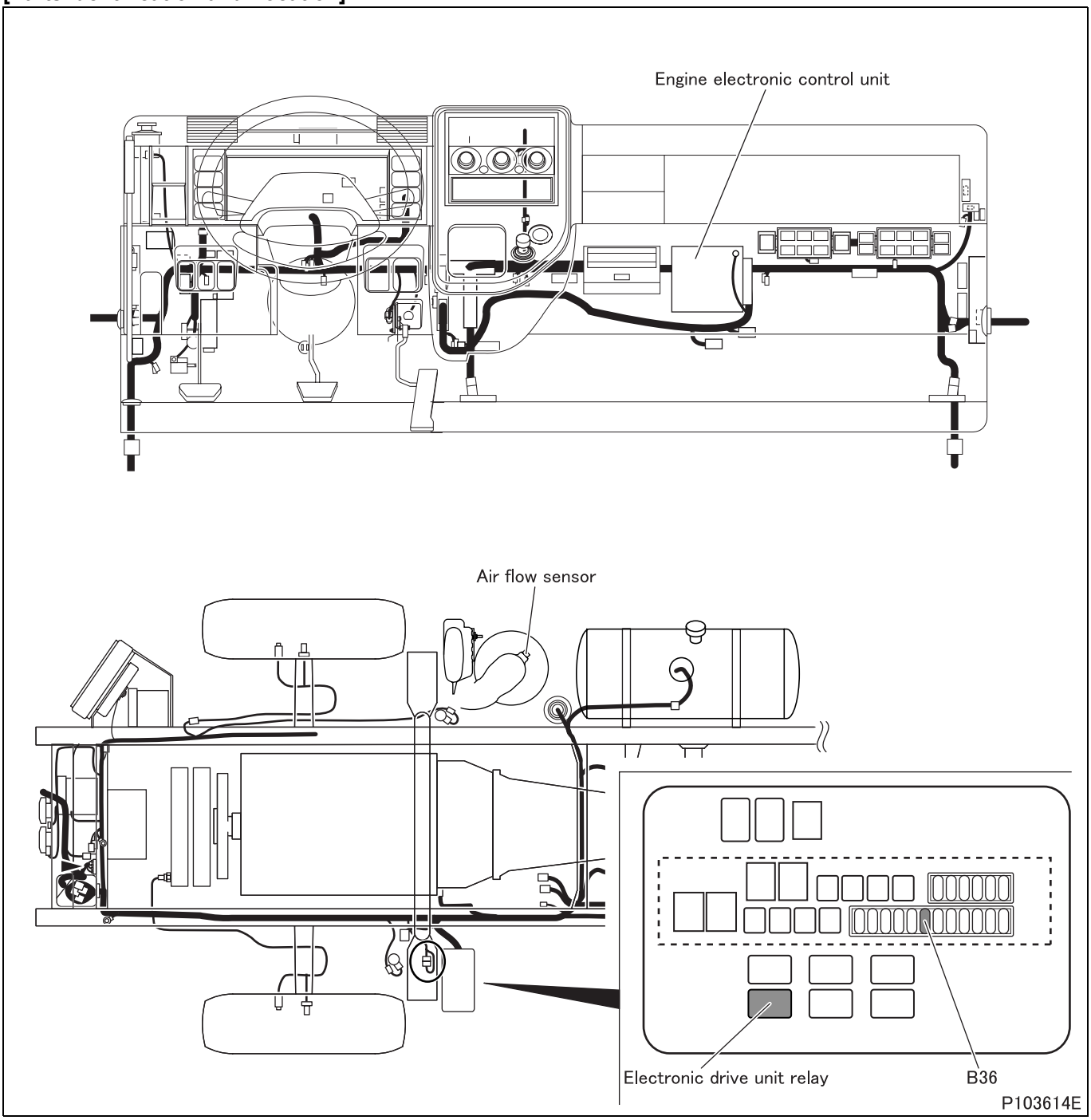

[Fault diagnosis]

- Perform checks in the sequence of the following steps.

Step 1	Inspection items		Inspection by control data
	Maintenance item		Measure item No. 60 “Air mass flow” of Service Data.
	Inspection condition		• Perform actuator test item No. AF “EDU Relay” • Gradually press accelerator pedal.
	Requirements		The numeric value should gradually increase.
	Inspection result (Is the judging standard satisfied?)	YES	Go to transient fault (See Gr00.).
		NO	Go to step 2.

Step 2	Inspection items		Inspection of sensor connector
	Maintenance item		Inspection of connector
	Inspection condition		–
	Requirements		• Connector is properly connected. • No trace of water entry is found. • No corrosion is found in terminal. • Connection to terminal is appropriate.
	Inspection result (Is the judging standard satisfied?)	YES	Go to step 3.
		NO	Modify connector.

Step 3	Inspection items		Inspection of sensor connector (power supply)
	Maintenance item		Measure value of voltage between connector terminal No. 3 (+) and 2 (–).
	Inspection condition		• Measure from back side of connector of harness with each device connected to harness. • Perform actuator test item No. AF “EDU Relay”
	Requirements		12 V
	Inspection result (Is the judging standard satisfied?)	YES	Go to step 6.
		NO	Go to step 4.

Step 4	Inspection items		Inspection of harness between electronic drive unit relay and sensor (power supply)
	Maintenance item		Check circuit between electronic drive unit relay connector terminal No. 4 and sensor connector terminal No. 3.
	Inspection condition		Disconnect each device from harness and measure from connection side of harness connector.
	Requirements		There is continuity.
	Inspection result (Is the judging standard satisfied?)	YES	Go to step 5.
		NO	Modify harness.

Step 5	Inspection items		Inspection of harness between sensor and electronic control unit (ground)
	Maintenance item		Check circuit between sensor connector terminal No. 2 and electronic control unit connector (GE58A) terminal No. 43.
	Inspection condition		Disconnect each device from harness and measure from connection side of harness connector.
	Requirements		There is continuity.
	Inspection result (Is the judging standard satisfied?)	YES	Go to step 6.
		NO	Modify harness.

Step 6	Inspection items		Inspection of harness between sensor and electronic control unit (signal)
	Maintenance item		Check circuit between sensor connector terminal No. 1 and electronic control unit connector (GE58A) terminal No. 44.
	Inspection condition		Disconnect each device from harness and measure from connection side of harness connector.
	Requirements		There is continuity.
	Inspection result (Is the judging standard satisfied?)	YES	Go to step 7.
		NO	Modify harness.

Step 7	Inspection items		Inspection of sensor unit
	Maintenance item		Since inspection of single part is not easy, whether characteristics are deteriorated or not must be checked for the sensor mounted on the current vehicle by measuring and comparing the amount of sensor intake air of the sensor currently mounted on vehicle and that replaced with new one by the service data. **(1) Prepare for inspection** • Clean or replace air cleaner element. • Prepare a new air flow sensor. • Warm up the engine fully. **(2) Measure the intake air of current sensor** • Keep pressing the accelerator pedal until it bottom the stopper bolt from the idling state. (no load maximum rotation) • Measure the following items from among “Service data”. **<General Scanning Tool used>** • Engine speed: “Ne” (rpm) • Intake air flow rate: “Air Flow Rate from MAFS” (g/s) **<Multi-Use Tester used>** • Engine speed: 01 “Engine Revolution” (rpm) • Intake air flow rate: 60 “Air mass flow” (g/s) **(3) Measure the intake air of new sensor** • Replace the currently mounted sensor with a new sensor. • Keep pressing the accelerator pedal until it bottom the stopper bolt from the idling state. (no load maximum rotation) • Measure intake air flow at the same rpm as that of engine revolution in item (2) of “Service data”. **(4) Comparison whether characteristics are deteriorated** • Calculate the characteristics deterioration factor (%) by the following equation. • Characteristics deterioration factor (%) = (intake air of new item – current intake air) × 100/intake air of new item.
	Inspection condition		–
	Requirements		10% or less
	Inspection result (Is the judging standard satisfied?)	YES	Go to step 8.
		NO	Replacement of sensor

Step 8	Inspection items		Inspection by control data
	Maintenance item		Measure item No. 60 “Air mass flow” of Service Data.
	Inspection condition		• Perform actuator test item No. AF “EDU Relay” • Gradually press accelerator pedal.
	Requirements		The numeric value should gradually increase.
	Inspection result (Is the judging standard satisfied?)	YES	Go to transient fault (See Gr00.).
		NO	Replacement of electronic control unit

[Fault code]
Diagnosis code: P0103/Flash code: 17
[Monitor]
Failure of air flow sensor
[Fault (outline)]
High signal range check
[Diagnosis check]
- Air flow sensor output voltage is monitored.

[Code generation condition]
- Air flow output from air flow sensor remains over 970 kg/hr for 3 seconds.
  (Warning lamp is lit and diagnosis code is displayed on third establishment of code generation condition.)

[Diagnosis check timing]
- Fault diagnosis is continuously performed during the driving cycle.

[Diagnostic requirement]
–

[Control effected by electronic control unit during fault]
- Intake air flow rate is fixed at backup value.
- Exhaust gas recirculation control is stopped.
- Throttle controls disabled
- Diesel particulate filter regeneration is stopped.
- Particulate matter deposit computation is stopped.
- Related fault check is stopped.

[Probable cause of trouble]
- Open-circuit or short-circuit of harness between electronic control unit and relay
- Open-circuit or short-circuit of harness between electronic control unit and sensor
- Open-circuit or short-circuit of harness between electronic drive unit and sensor
- Open-circuit or short-circuit of harness between fuse and relay
- Open-circuit or short-circuit of harness between relay and electronic drive unit
- Malfunction of each connector
- Malfunction of sensor
- Malfunction of relay
- Malfunction of electronic drive unit
- Malfunction of electronic control unit

[Recoverability]
- Recovered if signal becomes normal with starter switch in ON position.
  (Warning lamp is extinguished and diagnosis code is cleared at fourth display of diagnosis code after recovery.)

[Electronic Control Unit Connection Diagram]

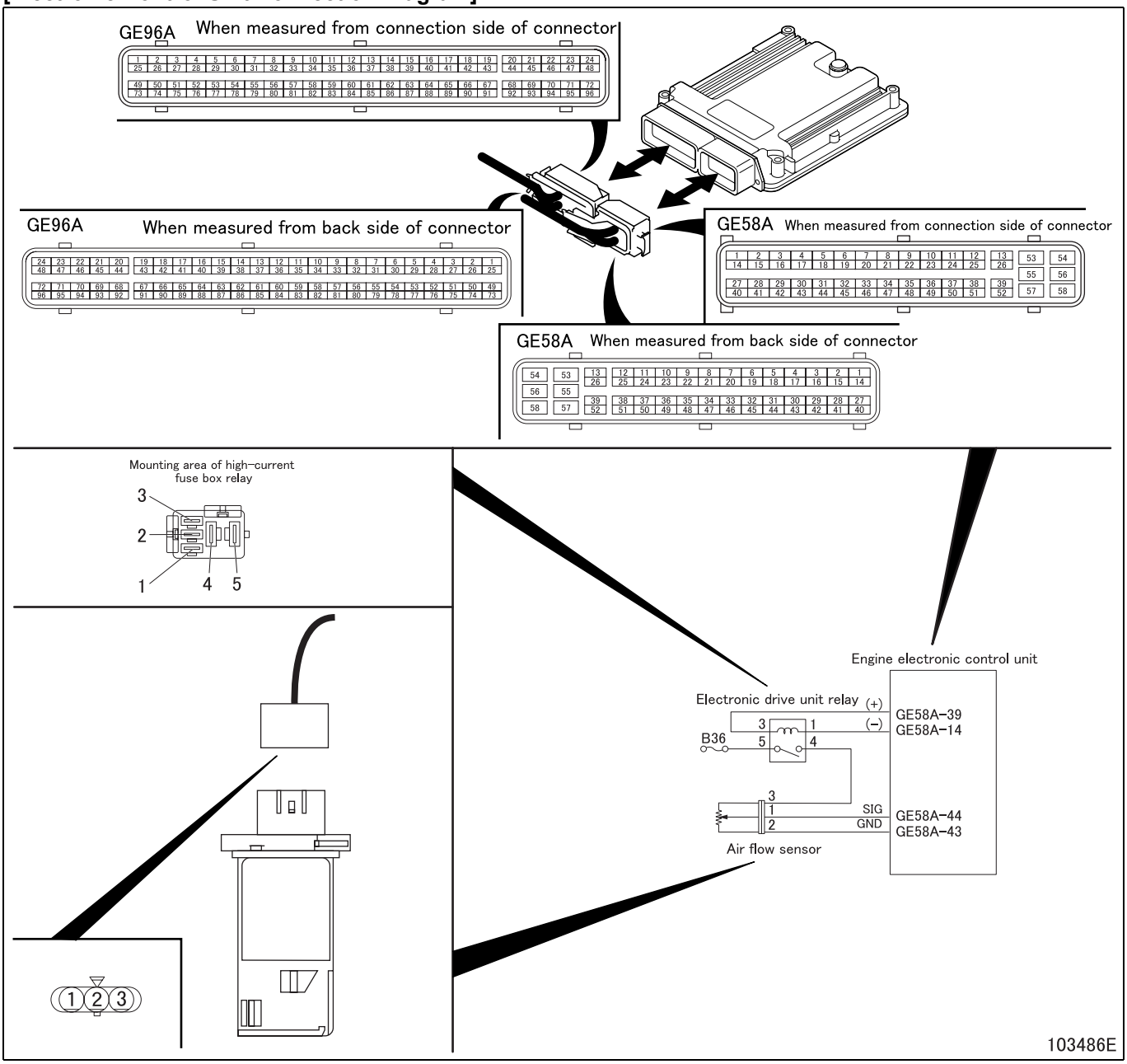

[Parts Identification and Location]

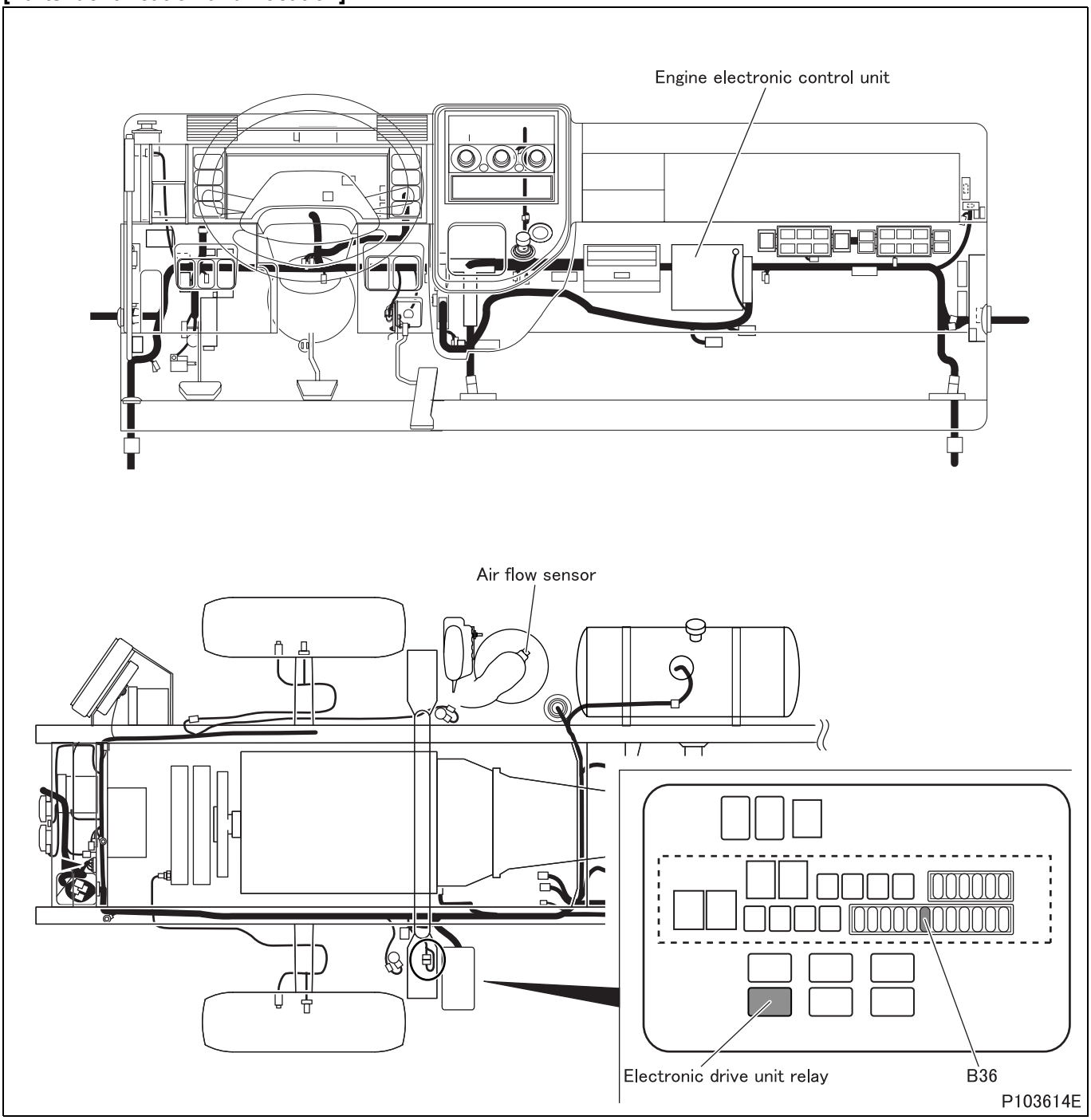

[Fault diagnosis]

- Perform checks in the sequence of the following steps.

Step 1	Inspection items		Inspection by control data
	Maintenance item		Measure item No. 60 “Air mass flow” of Service Data.
	Inspection condition		• Perform actuator test item No. AF “EDU Relay” • Gradually press accelerator pedal.
	Requirements		The numeric value should gradually increase.
	Inspection result (Is the judging standard satisfied?)	YES	Go to transient fault (See Gr00.).
		NO	Go to step 2.

Step 2	Inspection items		Inspection of sensor connector
	Maintenance item		Inspection of connector
	Inspection condition		–
	Requirements		• Connector is properly connected. • No trace of water entry is found. • No corrosion is found in terminal. • Connection to terminal is appropriate.
	Inspection result (Is the judging standard satisfied?)	YES	Go to step 3.
		NO	Modify connector.

Step 3	Inspection items		Inspection by sensor connector (power supply)
	Maintenance item		Measure value of voltage between connector terminal No. 3 (+) and 2 (–).
	Inspection condition		• Measure from back side of connector of harness with each device connected to harness. • Perform actuator test item No. AF “EDU Relay”
	Requirements		12 V
	Inspection result (Is the judging standard satisfied?)	YES	Go to step 6.
		NO	Go to step 4.

Step 4	Inspection items		Inspection of harness between electronic drive unit relay and sensor (power supply)
	Maintenance item		Check circuit between electronic drive unit relay connector terminal No. 4 and sensor connector terminal No. 3.
	Inspection condition		Disconnect each device from harness and measure from connection side of harness connector.
	Requirements		There is continuity.
	Inspection result (Is the judging standard satisfied?)	YES	Go to step 5.
		NO	Modify harness.

Step 5	Inspection items		Inspection of harness between sensor and electronic control unit (ground)
	Maintenance item		Check circuit between sensor connector terminal No. 2 and electronic control unit connector (GE58A) terminal No. 43.
	Inspection condition		Disconnect each device from harness and measure from connection side of harness connector.
	Requirements		There is continuity.
	Inspection result (Is the judging standard satisfied?)	YES	Go to step 6.
		NO	Modify harness.

Step 6	Inspection items		Inspection of harness between sensor and electronic control unit (signal)
	Maintenance item		Check circuit between sensor connector terminal No. 1 and electronic control unit connector (GE58A) terminal No. 44.
	Inspection condition		Disconnect each device from harness and measure from connection side of harness connector.
	Requirements		There is continuity.
	Inspection result (Is the judging standard satisfied?)	YES	Go to step 7.
		NO	Modify harness.

Step 7	Inspection items		Inspection of sensor unit
	Maintenance item		Since inspection of single part is not easy, whether characteristics are deteriorated or not must be checked for the sensor mounted on the current vehicle by measuring and comparing the amount of sensor intake air of the sensor currently mounted on vehicle and that replaced with new one by the service data. **(1) Prepare for inspection** • Clean or replace air cleaner element. • Prepare a new air flow sensor. • Warm up the engine fully. **(2) Measure the intake air of current sensor** • Keep pressing the accelerator pedal until it bottom the stopper bolt from the idling state. (no load maximum rotation) • Measure the following items from among “Service data”. **<General Scanning Tool used>** • Engine speed: “Ne” (rpm) • Intake air flow rate: “Air Flow Rate from MAFS” (g/s) **<Multi-Use Tester used>** • Engine speed: 01 “Engine Revolution” (rpm) • Intake air flow rate: 60 “Air mass flow” (g/s) **(3) Measure the intake air of new sensor** • Replace the currently mounted sensor with a new sensor. • Keep pressing the accelerator pedal until it bottom the stopper bolt from the idling state. (no load maximum rotation) • Measure intake air flow at the same rpm as that of engine revolution in item (2) of “Service data”. **(4) Comparison whether characteristics are deteriorated** • Calculate the characteristics deterioration factor (%) by the following equation. • Characteristics deterioration factor (%) = (intake air of new item – current intake air) × 100/intake air of new item.
	Inspection condition		–
	Requirements		10% or less
	Inspection result (Is the judging standard satisfied?)	YES	Go to step 8.
		NO	Replacement of sensor

Step 8	Inspection items		Inspection by control data
	Maintenance item		Measure item No. 60 “Air mass flow” of Service Data.
	Inspection condition		• Perform actuator test item No. AF “EDU Relay” • Gradually press accelerator pedal.
	Requirements		The numeric value should gradually increase.
	Inspection result (Is the judging standard satisfied?)	YES	Go to transient fault (See Gr00.).
		NO	Replacement of electronic control unit

[Fault code]
Diagnosis code: P0112/Flash code: 44
[Monitor]
Failure of intake air temperature sensor
[Fault (outline)]
Low signal range check
[Diagnosis check]
- Intake air temperature sensor output voltage is monitored.

[Code generation condition]
- Output voltage of intake air temperature sensor remains below 0.2 V for 1 second. (sensor temperature: 198°C {388°F} or higher)
  (Warning lamp is lit and diagnosis code is displayed on third establishment of code generation condition.)

[Diagnosis check timing]
- Fault diagnosis is continuously performed during the driving cycle.

[Diagnostic requirement]
–

[Control effected by electronic control unit during fault]
- Intake air flow rate is fixed at backup value.
- Related fault check is stopped.

[Probable cause of trouble]
- Open-circuit or short-circuit of harness between electronic control unit and intake air temperature sensor
- Malfunction of each connector
- Malfunction of sensor
- Malfunction of electronic control unit

[Recoverability]
- Recovered if signal becomes normal with starter switch in ON position.
  (Warning lamp is extinguished and diagnosis code is cleared at fourth display of diagnosis code after recovery.)

[Electronic Control Unit Connection Diagram]

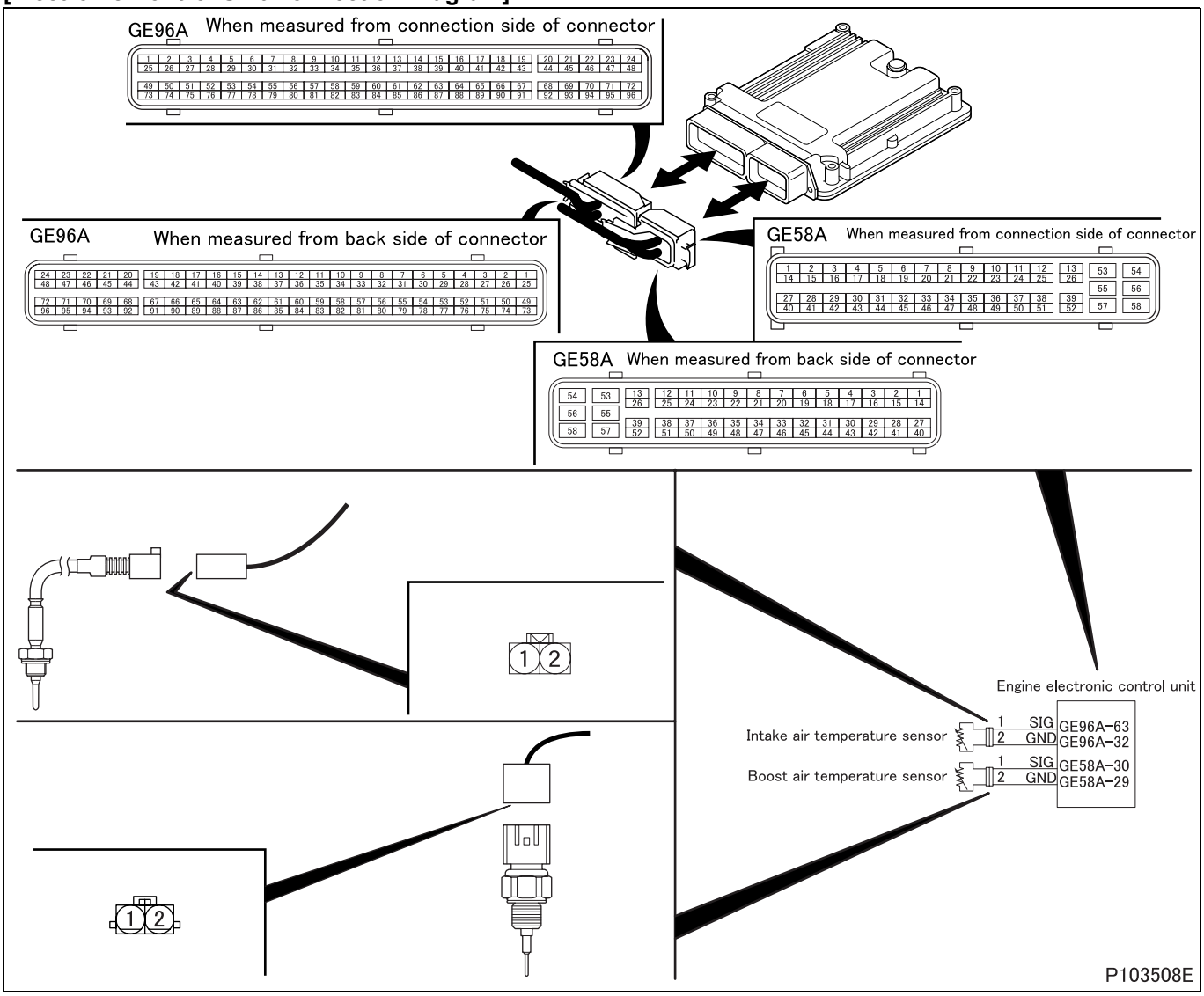

[Parts Identification and Location]

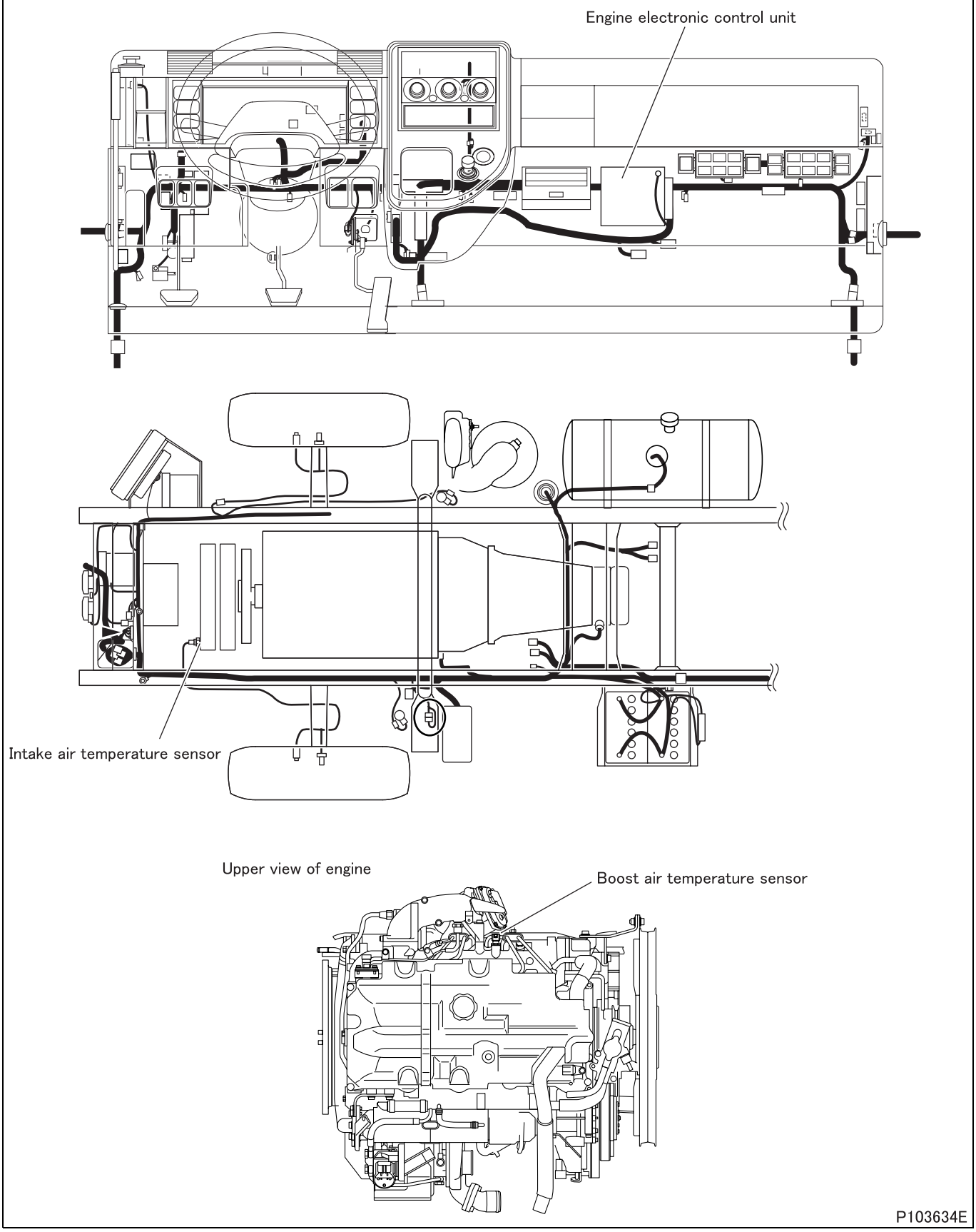

[Fault diagnosis]

- Perform checks in the sequence of the following steps.

Step 1	Inspection items		Inspection by control data
	Maintenance item		**<General Scanning Tool used>** • Measure item “Intake Air Temperature” . **<Multi-Use Tester used>** • Measure item No. 30 “Intake Air Temp. (upstream)” of Service Data.
	Inspection condition		–
	Requirements		When engine is cold: Temperature is equivalent to outside temperature.
	Inspection result (Is the judging standard satisfied?)	YES	Go to transient fault (See Gr00.).
		NO	Go to step 2.

Step 2	Inspection items		Inspection by electronic control unit connector
	Maintenance item		Measure value of resistance between connector (GE96A) terminal No. 32 and 63.
	Inspection condition		Disconnect electronic control unit from harness and measure from connection side of harness connector.
	Requirements		• 50°C {122°F}: 2.202 $^{+0.233}_{-0.208}$ kΩ • 100°C {212°F}: 508.1 $^{+41.3}_{-37.7}$ Ω • 150°C {302°F}: 160.4 $^{+10.3}_{-9.6}$ Ω
	Inspection result (Is the judging standard satisfied?)	YES	Go to step 3.
		NO	Go to step 4.

Step 3	Inspection items		Inspection of electronic control unit connector
	Maintenance item		Inspection of connector
	Inspection condition		–
	Requirements		• Connector is properly connected. • No trace of water entry is found. • No corrosion is found in terminal. • Connection to terminal is appropriate.
	Inspection result (Is the judging standard satisfied?)	YES	Go to step 8.
		NO	Modify connector.

Step 4	Inspection items		Inspection of intake air temperature sensor connector
	Maintenance item		Inspection of connector
	Inspection condition		–
	Requirements		• Connector is properly connected. • No trace of water entry is found. • No corrosion is found in terminal. • Connection to terminal is appropriate.
	Inspection result (Is the judging standard satisfied?)	YES	Go to step 5.
		NO	Modify connector.

Step 5	Inspection items		Inspection of intake air temperature sensor unit
	Maintenance item		Measure value of resistance between connector terminal No. 1 and 2.
	Inspection condition		• Put intake air temperature sensor in container filled with engine oil. • Heat the oil to each of the specified temperatures. Stir the oil well while doing so.
	Requirements		• 50°C {122°F}: 2.202 $^{+0.233}_{-0.208}$ kΩ • 100°C {212°F}: 508.1 $^{+41.3}_{-37.7}$ Ω • 150°C {302°F}: 160.4 $^{+10.3}_{-9.6}$ Ω
	Inspection result (Is the judging standard satisfied?)	YES	Go to step 6.
		NO	Replacement of sensor

<Step 5 inspection diagram>

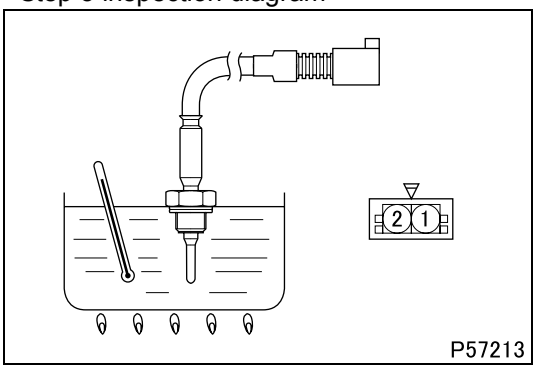

Step 6	Inspection items		Inspection of harness between electronic control unit and sensor (power supply)
	Maintenance item		Check circuit between sensor connector terminal No. 1 and electronic control unit connector (GE96A) terminal No. 63.
	Inspection condition		Disconnect each device from harness and measure from connection side of harness connector.
	Requirements		There is continuity.
	Inspection result (Is the judging standard satisfied?)	YES	Go to step 7.
		NO	Modify harness.

Step 7	Inspection items		Inspection of harness between electronic control unit and sensor (ground)
	Maintenance item		Check circuit between sensor connector terminal No. 2 and electronic control unit connector (GE96A) terminal No. 32.
	Inspection condition		Disconnect each device from harness and measure from connection side of harness connector.
	Requirements		There is continuity.
	Inspection result (Is the judging standard satisfied?)	YES	Go to step 8.
		NO	Modify harness.

Step 8	Inspection items		Inspection by control data
	Maintenance item		**<General Scanning Tool used>** • Measure item “Intake Air Temperature”. **<Multi-Use Tester used>** • Measure item No. 30 “Intake Air Temp. (upstream)” of Service Data.
	Inspection condition		–
	Requirements		When engine is cold: Temperature is equivalent to outside temperature.
	Inspection result (Is the judging standard satisfied?)	YES	Go to transient fault (See Gr00.).
		NO	Replacement of electronic control unit

[Fault code]
Diagnosis code: P0113/Flash code: 44
[Monitor]
Failure of intake air temperature sensor
[Fault (outline)]
High signal range check
[Diagnosis check]
- intake air temperature sensor output voltage is monitored.

[Code generation condition]
- Output voltage of intake air temperature sensor remains above 4.87 V for 1 second. (sensor temperature: –37°C {–34.6°F} or lower)
  (Warning lamp is lit and diagnosis code is displayed on third establishment of code generation condition.)

[Diagnosis check timing]
- Fault diagnosis is continuously performed during the driving cycle.

[Diagnostic requirement]
–

[Control effected by electronic control unit during fault]
- Intake air flow rate is fixed at backup value.
- Related fault check is stopped.

[Probable cause of trouble]
- Open-circuit or short-circuit of harness between electronic control unit and intake air temperature sensor
- Malfunction of each connector
- Malfunction of sensor
- Malfunction of electronic control unit

[Recoverability]
- Recovered if signal becomes normal with starter switch in ON position.
  (Warning lamp is extinguished and diagnosis code is cleared at fourth display of diagnosis code after recovery.)

[Electronic Control Unit Connection Diagram]

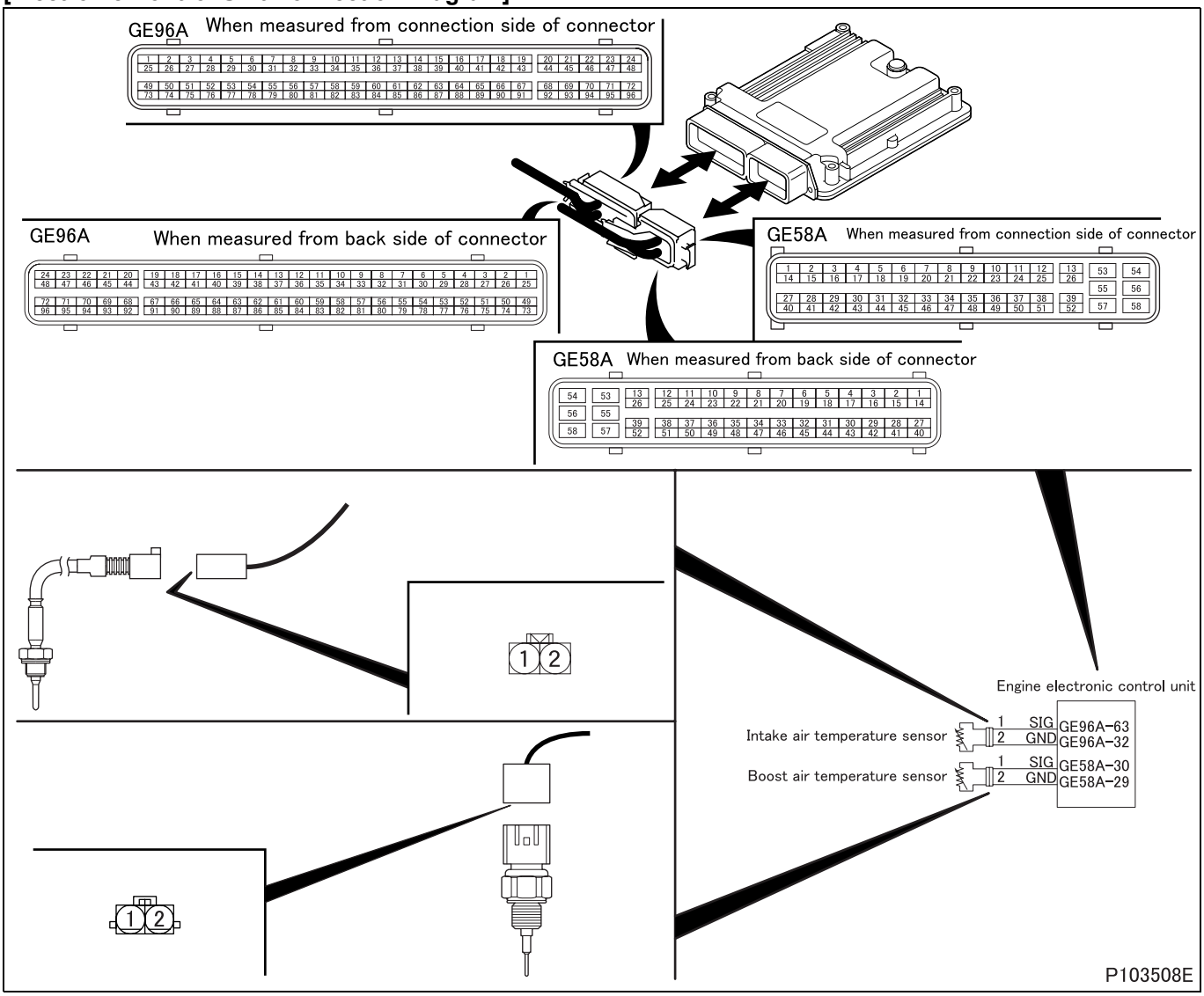

[Parts Identification and Location]

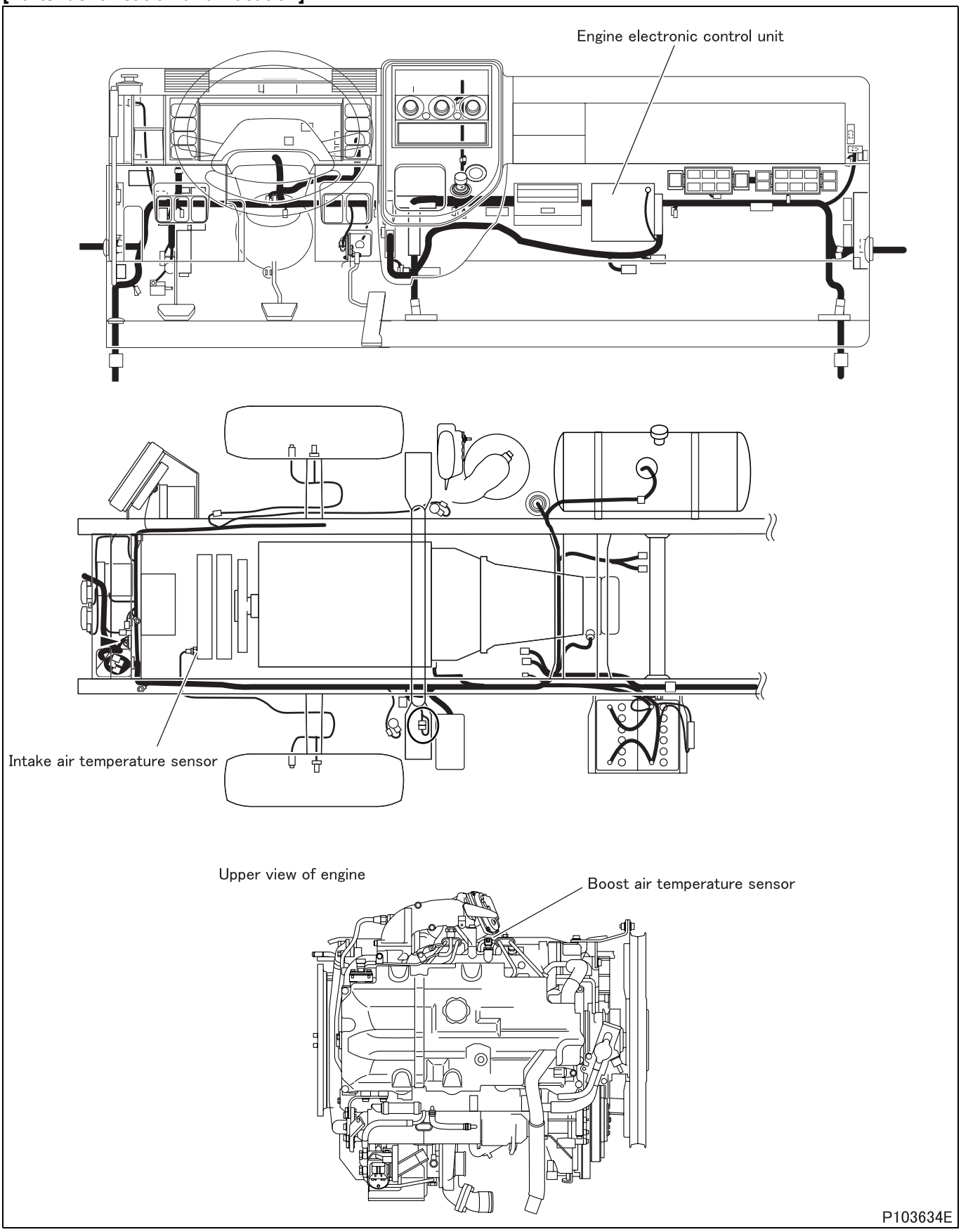

[Fault diagnosis]

- Perform checks in the sequence of the following steps.

Step 1	Inspection items		Inspection by control data
	Maintenance item		**<General Scanning Tool used>** • Measure item “Intake Air Temperature”. **<Multi-Use Tester used>** • Measure item No. 30 “Intake Air Temp. (upstream)” of Service Data.
	Inspection condition		–
	Requirements		When engine is cold: Temperature is equivalent to outside temperature.
	Inspection result (Is the judging standard satisfied?)	YES	Go to transient fault (See Gr00.).
		NO	Go to step 2.

Step 2	Inspection items		Inspection by electronic control unit connector
	Maintenance item		Measure value of resistance between connector (GE96A) terminal No. 32 and 63.
	Inspection condition		Disconnect electronic control unit from harness and measure from connection side of harness connector.
	Requirements		• 50°C {122°F}: 2.202 $^{+0.233}_{-0.208}$ kΩ • 100°C {212°F}: 508.1 $^{+41.3}_{-37.7}$ Ω • 150°C {302°F}: 160.4 $^{+10.3}_{-9.6}$ Ω
	Inspection result (Is the judging standard satisfied?)	YES	Go to step 3.
		NO	Go to step 4.

Step 3	Inspection items		Inspection of electronic control unit connector
	Maintenance item		Inspection of connector
	Inspection condition		–
	Requirements		• Connector is properly connected. • No trace of water entry is found. • No corrosion is found in terminal. • Connection to terminal is appropriate.
	Inspection result (Is the judging standard satisfied?)	YES	Go to step 8.
		NO	Modify connector.

Step 4	Inspection items		Inspection of intake air temperature sensor connector
	Maintenance item		Inspection of connector
	Inspection condition		–
	Requirements		• Connector is properly connected. • No trace of water entry is found. • No corrosion is found in terminal. • Connection to terminal is appropriate.
	Inspection result (Is the judging standard satisfied?)	YES	Go to step 5.
		NO	Modify connector.

Step 5	Inspection items		Inspection of intake air temperature sensor unit
	Maintenance item		Measure value of resistance between connector terminal No. 1 and 2.
	Inspection condition		• Put intake air temperature sensor in container filled with engine oil. • Heat the oil to each of the specified temperatures. Stir the oil well while doing so.
	Requirements		• 50°C {122°F}: 2.202 $^{+0.233}_{-0.208}$ kΩ • 100°C {212°F}: 508.1 $^{+41.3}_{-37.7}$ Ω • 150°C {302°F}: 160.4 $^{+10.3}_{-9.6}$ Ω
	Inspection result (Is the judging standard satisfied?)	YES	Go to step 6.
		NO	Replacement of sensor

<Step 5 inspection diagram>

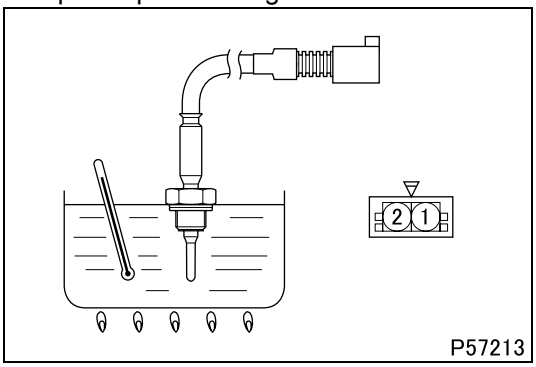

Step 6	Inspection items		Inspection of harness between electronic control unit and sensor (power supply)
	Maintenance item		Check circuit between sensor connector terminal No. 1 and electronic control unit connector (GE96A) terminal No. 63.
	Inspection condition		Disconnect each device from harness and measure from connection side of harness connector.
	Requirements		There is continuity.
	Inspection result (Is the judging standard satisfied?)	YES	Go to step 7.
		NO	Modify harness.

Step 7	Inspection items		Inspection of harness between electronic control unit and sensor (ground)
	Maintenance item		Check circuit between sensor connector terminal No. 2 and electronic control unit connector (GE96A) terminal No. 32.
	Inspection condition		Disconnect each device from harness and measure from connection side of harness connector.
	Requirements		There is continuity.
	Inspection result (Is the judging standard satisfied?)	YES	Go to step 8.
		NO	Modify harness.

Step 8	Inspection items		Inspection by control data
	Maintenance item		**<General Scanning Tool used>** • Measure item “Intake Air Temperature”. **<Multi-Use Tester used>** • Measure item No. 30 “Intake Air Temp. (upstream)” of Service Data.
	Inspection condition		–
	Requirements		When engine is cold: Temperature is equivalent to outside temperature.
	Inspection result (Is the judging standard satisfied?)	YES	Go to transient fault (See Gr00.).
		NO	Replacement of electronic control unit

[Fault code]
Diagnosis code: P0117/Flash code: 21
[Monitor]
Failure of water temperature sensor
[Fault (outline)]
Low signal range check
[Diagnosis check]
- Water temperature sensor 1 output voltage is monitored.

[Code generation condition]
- Output voltage of temperature sensor 1 remains below 0.1 V for 1 second. (sensor temperature: 150°C {302°F} or higher)
  (Warning lamp is lit and diagnosis code is displayed on third establishment of code generation condition.)

[Diagnosis check timing]
- Fault diagnosis is continuously performed during the driving cycle.

[Diagnostic requirement]
–

[Control effected by electronic control unit during fault]
- Engine coolant temperature is fixed at backup value.
- Fuel system temperature is fixed at backup value.
- Exhaust gas recirculation control is stopped.
- Throttle controls disabled
- Misfire detection is stopped.
- Warm-up cycle counter is stopped.
- Diesel particulate filter regeneration is stopped.
- Related fault check is stopped.

[Probable cause of trouble]
- Open-circuit or short-circuit of harness between electronic control unit and water temperature sensor 1
- Malfunction of each connector
- Malfunction of sensor
- Malfunction of electronic control unit

[Recoverability]
- Recovered if signal becomes normal with starter switch in ON position.
  (Warning lamp is extinguished and diagnosis code is cleared at fourth display of diagnosis code after recovery.)

[Electronic Control Unit Connection Diagram]

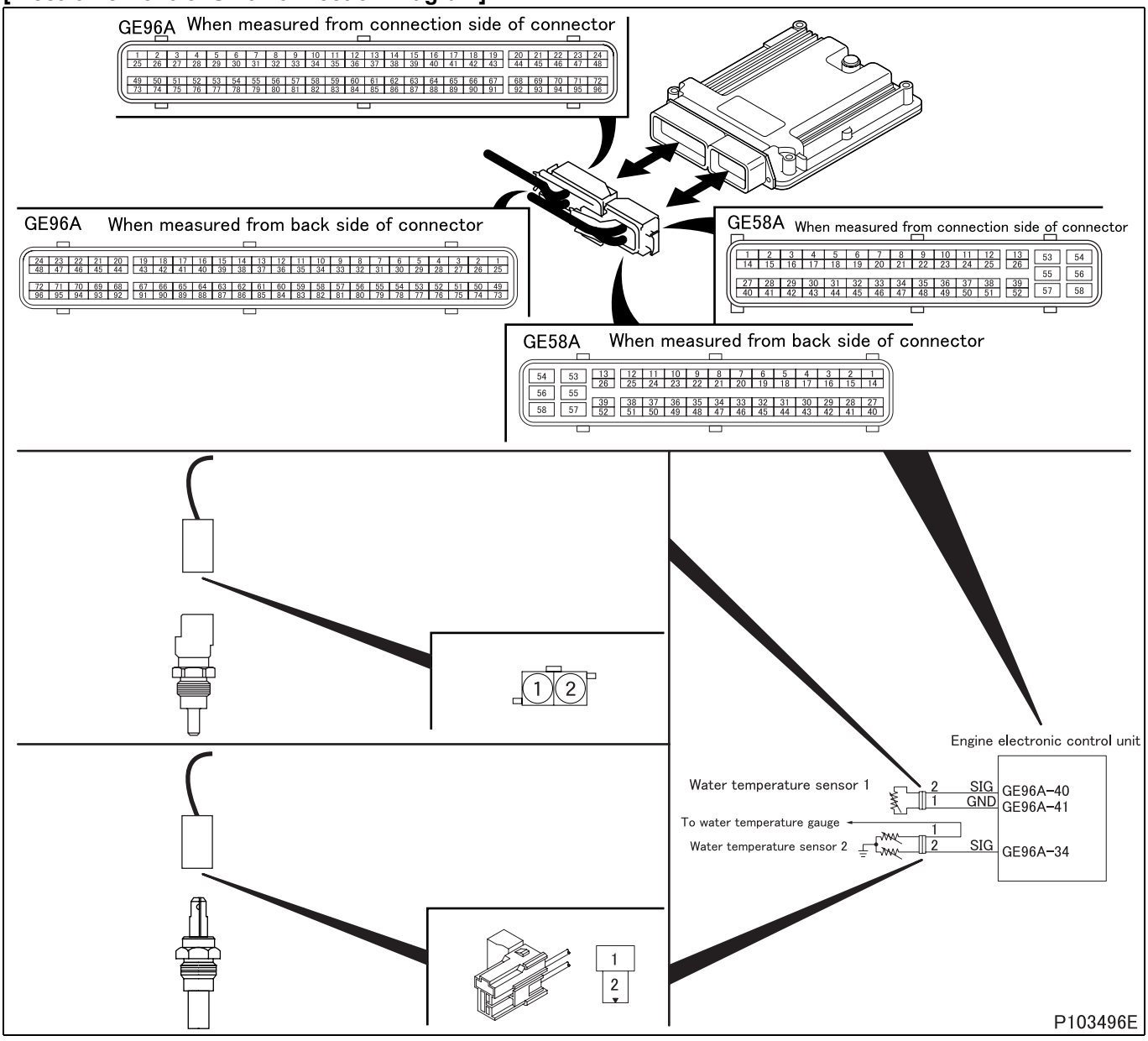

[Parts Identification and Location]

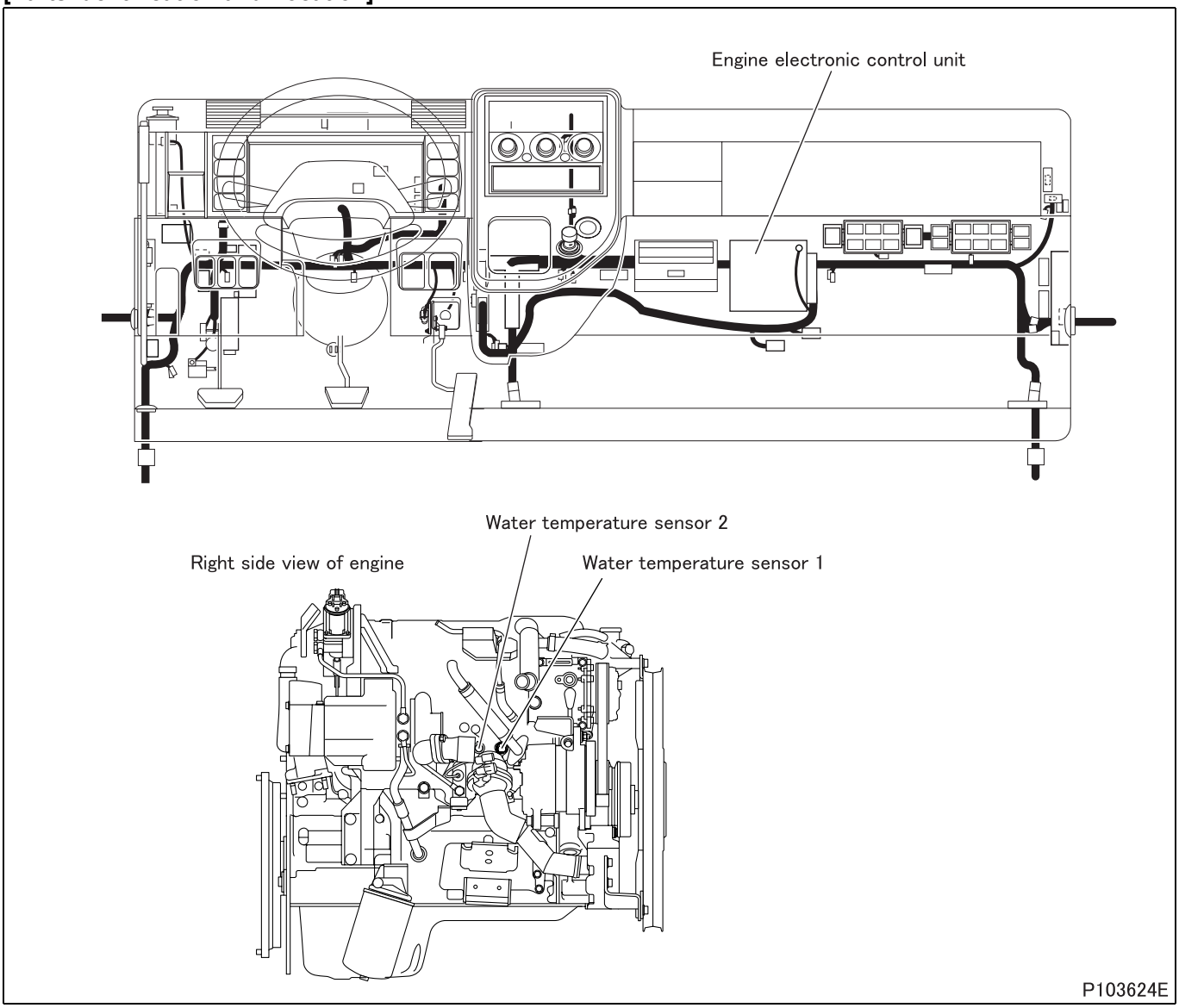

[Fault diagnosis]

- Perform checks in the sequence of the following steps.

Step 1	Inspection items		Inspection by control data
	Maintenance item		**<General Scanning Tool used>** • Measure item “Engine Coolant Temperature”. **<Multi-Use Tester used>** • Measure item No. 31 “Water Temperature” of Service Data.
	Inspection condition		–
	Requirements		• When engine is cold: Temperature is equivalent to outside temperature. • While engine is warmed up: Temperature gradually increases. • When engine is stopped after warm-up: Temperature gradually declines.
	Inspection result (Is the judging standard satisfied?)	YES	Go to transient fault (See Gr00.).
		NO	Go to step 2.

Step 2	Inspection items		Inspection by electronic control unit connector
	Maintenance item		Measure value of resistance between connector (GE96A) terminals No. 40 and No. 41.
	Inspection condition		Disconnect electronic control unit from harness and measure from connection side of harness connector.
	Requirements		• 20°C {68°F}: 2.45 ± 0.14 kΩ • 80°C {176°F}: 0.32 kΩ (reference value) • 110°C {230°F}: 141.7 ± 2 kΩ
	Inspection result (Is the judging standard satisfied?)	YES	Go to step 3.
		NO	Go to step 4.

Step 3	Inspection items		Inspection of electronic control unit connector
	Maintenance item		Inspection of connector
	Inspection condition		–
	Requirements		• Connector is properly connected. • No trace of water entry is found. • No corrosion is found in terminal. • Connection to terminal is appropriate.
	Inspection result (Is the judging standard satisfied?)	YES	Go to step 8.
		NO	Modify harness.

Step 4	Inspection items		Inspection of water temperature sensor 1 connector
	Maintenance item		Inspection of connector
	Inspection condition		–
	Requirements		• Connector is properly connected. • No trace of water entry is found. • No corrosion is found in terminal. • Connection to terminal is appropriate.
	Inspection result (Is the judging standard satisfied?)	YES	Go to step 5.
		NO	Modify connector.

Step 5	Inspection items		Inspection of water temperature sensor 1 unit
	Maintenance item		Measure value of resistance between connector terminal No. 1 and 2.
	Inspection condition		• Put water temperature sensor 1 in container filled with engine oil. • Heat the oil to each of the specified temperatures. Stir the oil well while doing so.
	Requirements		• 20°C {68°F}: 2.45 ± 0.14 kΩ • 80°C {176°F}: 0.32 kΩ (reference value) • 110°C {230°F}: 141.7 ± 2 kΩ
	Inspection result (Is the judging standard satisfied?)	YES	Go to step 6.
		NO	Replacement of sensor

<Step 5 inspection diagram>

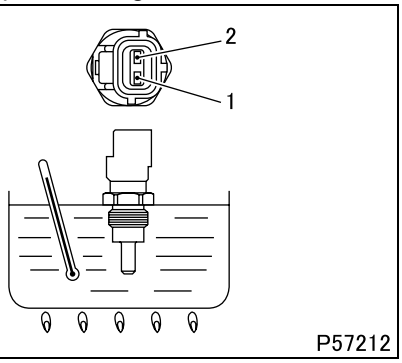

Step 6	Inspection items		Inspection of harness between electronic control unit and sensor (power supply)
	Maintenance item		Check circuit between sensor connector terminal No. 2 and electronic control unit connector (GE96A) terminal No. 40.
	Inspection condition		Disconnect each device from harness and measure from connection side of harness connector.
	Requirements		There is continuity.
	Inspection result (Is the judging standard satisfied?)	YES	Go to step 7.
		NO	Modify harness.

Step 7	Inspection items		Inspection of harness between electronic control unit and sensor (ground)
	Maintenance item		Check circuit between sensor connector terminal No. 1 and electronic control unit connector (GE96A) terminal No. 41.
	Inspection condition		Disconnect each device from harness and measure from connection side of harness connector.
	Requirements		There is continuity.
	Inspection result (Is the judging standard satisfied?)	YES	Go to step 8.
		NO	Modify harness.

Step 8	Inspection items		Inspection by control data
	Maintenance item		**<General Scanning Tool used>** • Measure item “Engine Coolant Temperature”. **<Multi-Use Tester used>** • Measure item No. 31 “Water Temperature” of Service Data.
	Inspection condition		–
	Requirements		• When engine is cold: Temperature is equivalent to outside temperature. • While engine is warmed up: Temperature gradually increases. • When engine is stopped after warm-up: Temperature gradually declines.
	Inspection result (Is the judging standard satisfied?)	YES	Go to transient fault (See Gr00.).
		NO	Replacement of electronic control unit

[Fault code]
Diagnosis code: P0118/Flash code: 21
[Monitor]
Failure of water temperature sensor
[Fault (outline)]
High signal range check
[Diagnosis check]
- Water temperature sensor 1 output voltage is monitored.

[Code generation condition]
- Output voltage of temperature sensor 1 remains above 4.8 V for 1 second. (sensor temperature: –45°C {–49°F} or lower)
  (Warning lamp is lit and diagnosis code is displayed on third establishment of code generation condition.)

[Diagnosis check timing]
- Fault diagnosis is continuously performed during the driving cycle.

[Diagnostic requirement]
–

[Control effected by electronic control unit during fault]
- Engine coolant temperature is fixed at backup value.
- Fuel system temperature is fixed at backup value.
- Exhaust gas recirculation control is stopped.
- Throttle controls disabled
- Misfire detection is stopped.
- Warm-up cycle counter is stopped.
- Diesel particulate filter regeneration is stopped.
- Related fault check is stopped.

[Probable cause of trouble]
- Open-circuit or short-circuit of harness between electronic control unit and water temperature sensor 1
- Malfunction of each connector
- Malfunction of sensor
- Malfunction of electronic control unit

[Recoverability]
- Recovered if signal becomes normal with starter switch in ON position.
  (Warning lamp is extinguished and diagnosis code is cleared at fourth display of diagnosis code after recovery.)

[Electronic Control Unit Connection Diagram]

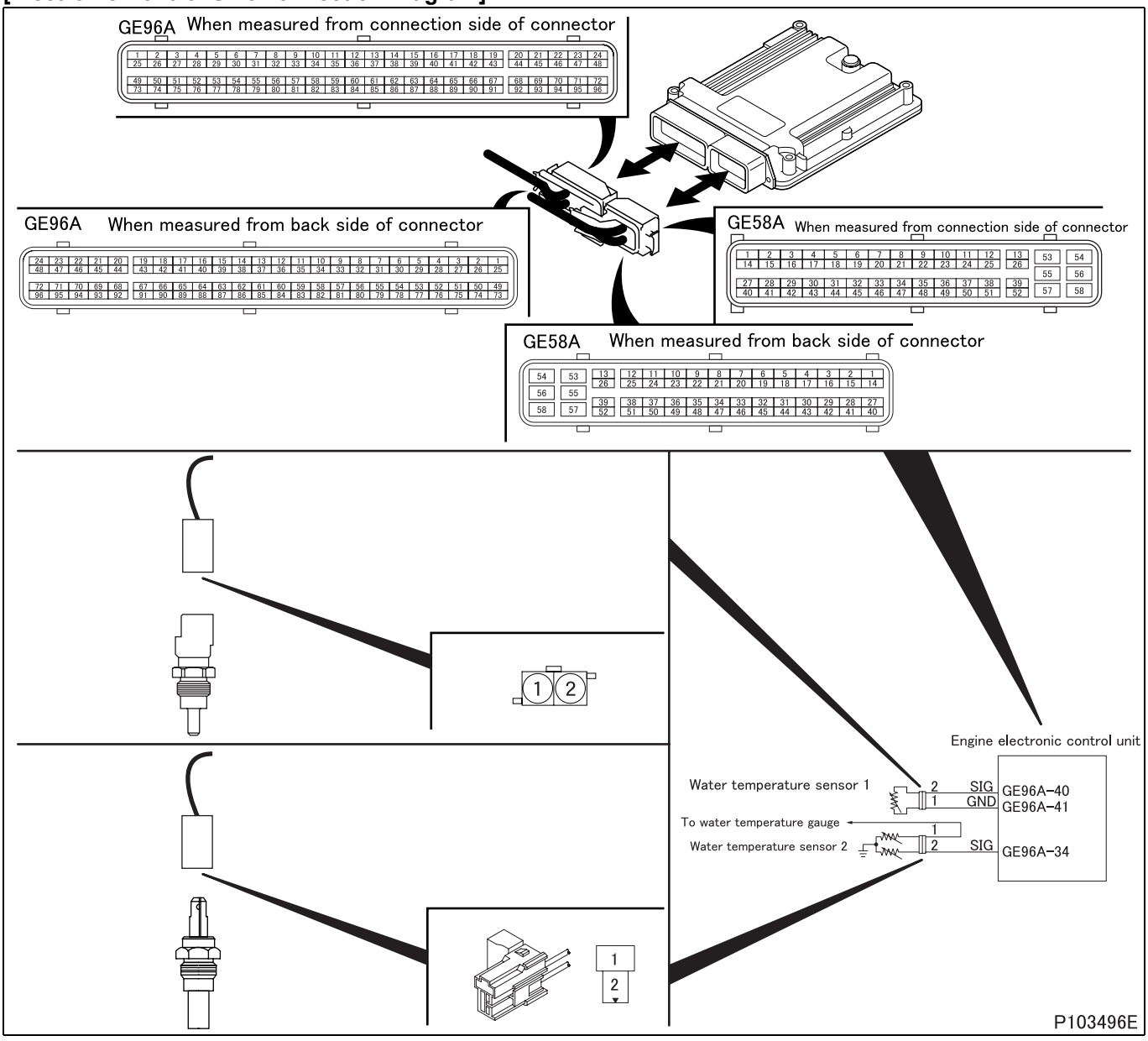

[Parts Identification and Location]

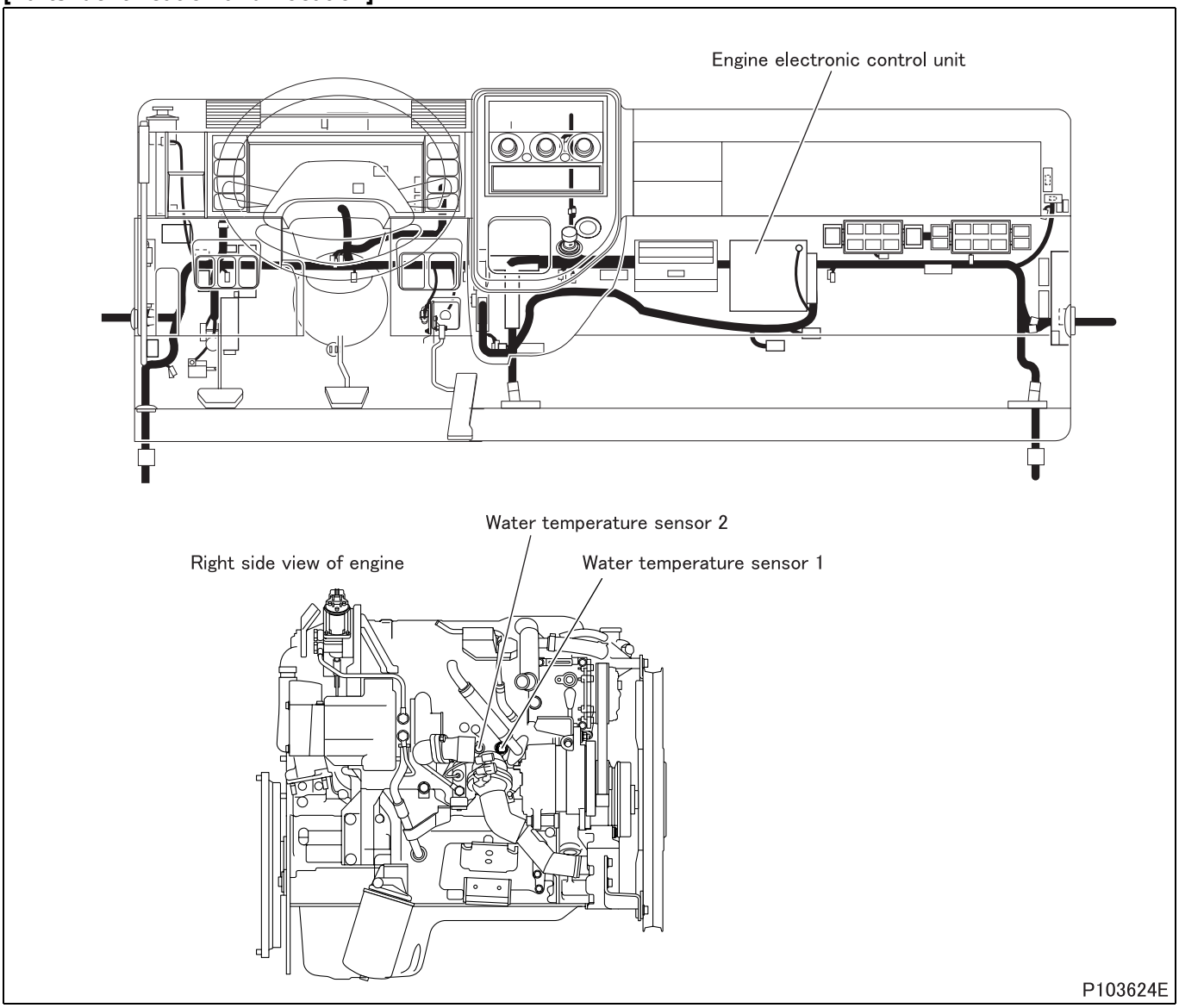

[Fault diagnosis]

- Perform checks in the sequence of the following steps.

Step 1	Inspection items		Inspection by control data
	Maintenance item		**<General Scanning Tool used>** • Measure item “Engine Coolant Temperature”. **<Multi-Use Tester used>** • Measure item No. 31 “Water Temperature” of Service Data.
	Inspection condition		–
	Requirements		• When engine is cold: Temperature is equivalent to outside temperature. • While engine is warmed up: Temperature gradually increases. • When engine is stopped after warm-up: Temperature gradually declines.
	Inspection result (Is the judging standard satisfied?)	YES	Go to transient fault (See Gr00.).
		NO	Go to step 2.

Step 2	Inspection items		Inspection by electronic control unit connector
	Maintenance item		Measure value of resistance between connector (GE96A) terminals No. 40 and No. 41.
	Inspection condition		Disconnect electronic control unit from harness and measure from connection side of harness connector.
	Requirements		• 20°C {68°F}: 2.45 ± 0.14 kΩ • 80°C {176°F}: 0.32 kΩ (reference value) • 110°C {230°F}: 141.7 ± 2 kΩ
	Inspection result (Is the judging standard satisfied?)	YES	Go to step 3.
		NO	Go to step 4.

Step 3	Inspection items		Inspection of electronic control unit connector
	Maintenance item		Inspection of connector
	Inspection condition		–
	Requirements		• Connector is properly connected. • No trace of water entry is found. • No corrosion is found in terminal. • Connection to terminal is appropriate.
	Inspection result (Is the judging standard satisfied?)	YES	Go to step 8.
		NO	Modify connector.

Step 4	Inspection items		Inspection of water temperature sensor 1 connector
	Maintenance item		Inspection of connector
	Inspection condition		–
	Requirements		• Connector is properly connected. • No trace of water entry is found. • No corrosion is found in terminal. • Connection to terminal is appropriate.
	Inspection result (Is the judging standard satisfied?)	YES	Go to step 5.
		NO	Modify connector.

Step 5	Inspection items		Inspection of water temperature sensor 1 unit
	Maintenance item		Measure value of resistance between connector terminal No. 1 and 2.
	Inspection condition		• Put water temperature sensor 1 in container filled with engine oil. • Heat the oil to each of the specified temperatures. Stir the oil well while doing so.
	Requirements		• 20°C {68°F}: 2.45 ± 0.14 kΩ • 80°C {176°F}: 0.32 kΩ (reference value) • 110°C {230°F}: 141.7 ± 2 kΩ
	Inspection result (Is the judging standard satisfied?)	YES	Go to step 6.
		NO	Replacement of sensor

<Step 5 inspection diagram>

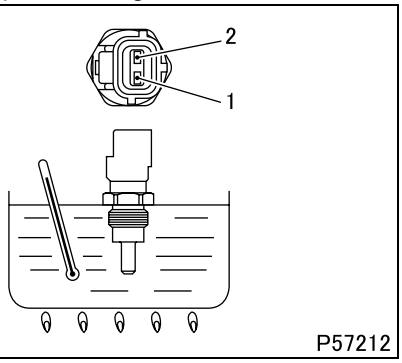

Step 6	Inspection items		Inspection of harness between electronic control unit and sensor (power supply)
	Maintenance item		Check circuit between sensor connector terminal No. 2 and electronic control unit connector (GE96A) terminal No. 40.
	Inspection condition		Disconnect each device from harness and measure from connection side of harness connector.
	Requirements		There is continuity.
	Inspection result (Is the judging standard satisfied?)	YES	Go to step 7.
		NO	Modify harness.

Step 7	Inspection items		Inspection of harness between electronic control unit and sensor (ground)
	Maintenance item		Check circuit between sensor connector terminal No. 1 and electronic control unit connector (GE96A) terminal No. 41.
	Inspection condition		Disconnect each device from harness and measure from connection side of harness connector.
	Requirements		There is continuity.
	Inspection result (Is the judging standard satisfied?)	YES	Go to step 8.
		NO	Modify harness.

Step 8	Inspection items		Inspection by control data
	Maintenance item		**<General Scanning Tool used>** • Measure item “Engine Coolant Temperature”. **<Multi-Use Tester used>** • Measure item No. 31 “Water Temperature” of Service Data.
	Inspection condition		–
	Requirements		• When engine is cold: Temperature is equivalent to outside temperature. • While engine is warmed up: Temperature gradually increases. • When engine is stopped after warm-up: Temperature gradually declines.
	Inspection result (Is the judging standard satisfied?)	YES	Go to transient fault (See Gr00.).
		NO	Replacement of electronic control unit

[Fault code]
Diagnosis code: P011A/Flash code: 21
[Monitor]
Characteristic abnormality of water temperature sensor
[Fault (outline)]
Gain drift
[Diagnosis check]
- Output temperature data from water temperature sensor 1 and sensor 2 are monitored for difference within specification.

[Code generation condition]
- 30 seconds after starting engine, difference in temperature data between sensor 1 and sensor 2 remains above 14°C {57°F} for 10 seconds.
  (Warning lamp is lit and diagnosis code is displayed on third establishment of code generation condition.)

[Diagnosis check timing]
- Fault diagnosis is performed only once during the driving cycle.

[Diagnostic requirement]
- Engine running time: 30 seconds

[Control effected by electronic control unit during fault]
- Exhaust gas recirculation control is stopped.
- Throttle controls disabled
- Misfire detection is stopped.
- Warm-up cycle counter is stopped.
- Diesel particulate filter regeneration is stopped.
- Related fault check is stopped.

[Probable cause of trouble]
- Open-circuit or short-circuit of harness between electronic control unit and sensor
- Malfunction of each connector
- Malfunction of sensor
- Malfunction of electronic control unit

[Recoverability]
- Recovered if signal becomes normal with starter switch in ON position.
  (Warning lamp is extinguished and diagnosis code is cleared at fourth display of diagnosis code after recovery.)

[Electronic Control Unit Connection Diagram]

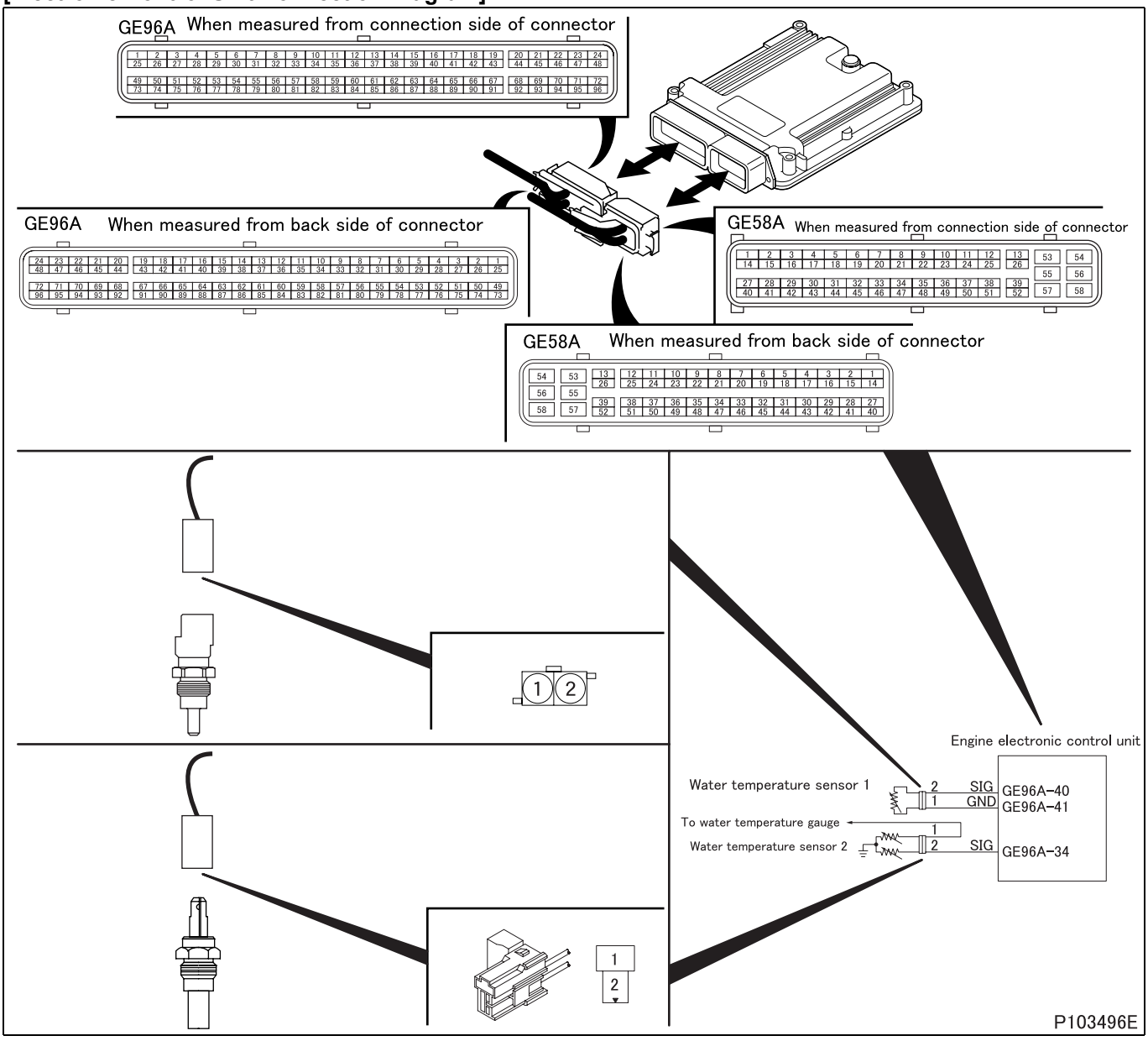

[Parts Identification and Location]

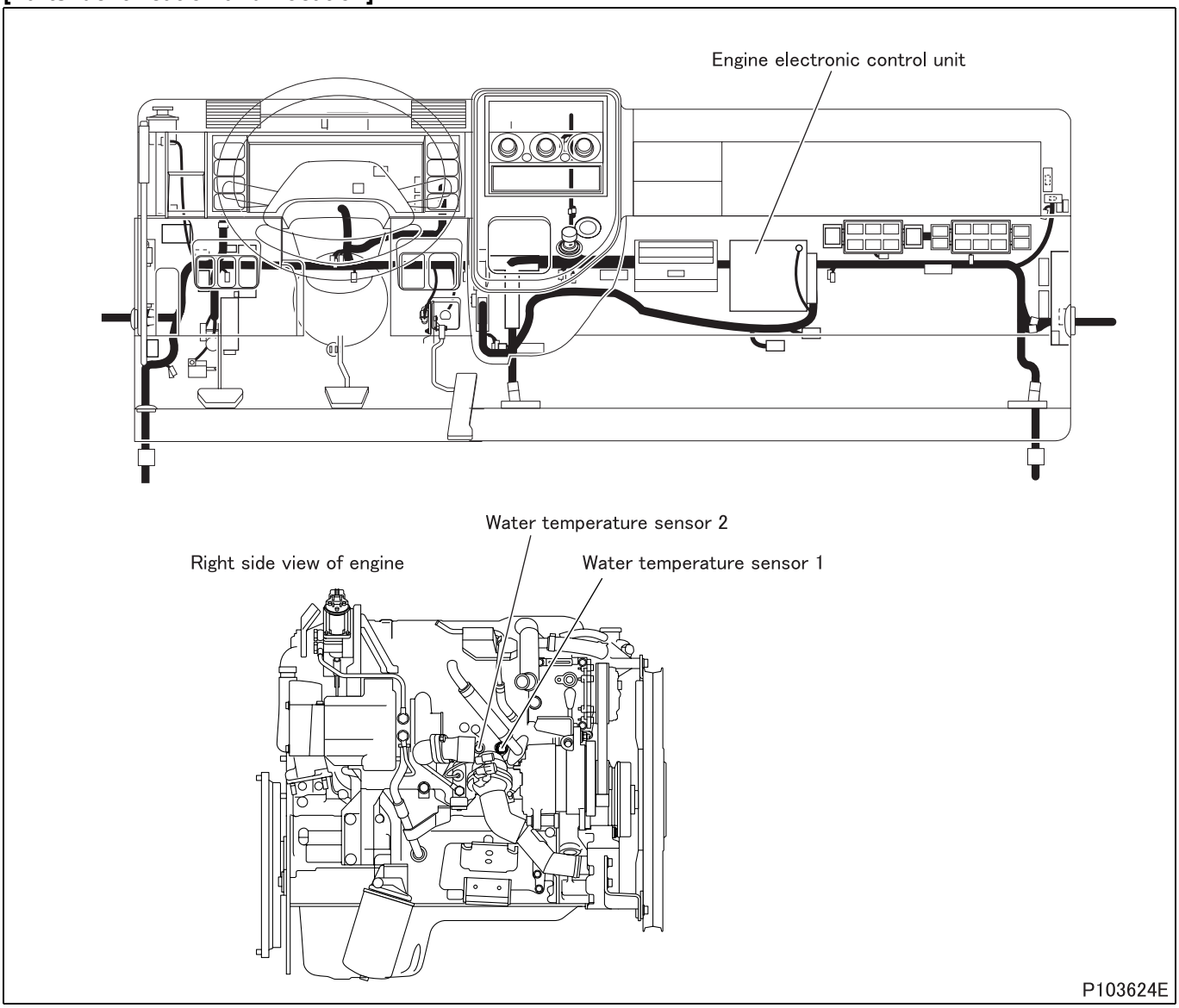

[Fault diagnosis]

- Perform checks in the sequence of the following steps.

Step 1	Inspection items		Inspection by control data
	Maintenance item		Measurement of following service data • Water temperature sensor 1: Item No. 31 “Water Temperature” • Water temperature sensor 2: Item No. 32 “Water Temperature 2”
	Inspection condition		Engine coolant temperature: 80°C {176°F}
	Requirements		Each service data indicates same temperature
	Inspection result (Is the judging standard satisfied?)	YES	Go to transient fault (See Gr00.).
		NO	Go to step 2.

Step 2	Inspection items		Inspection of electronic control unit connector
	Maintenance item		Inspection of connector
	Inspection condition		–
	Requirements		• Connector is properly connected. • No trace of water entry is found. • No corrosion is found in terminal. • Connection to terminal is appropriate.
	Inspection result (Is the judging standard satisfied?)	YES	Go to step 3.
		NO	Modify connector.

Step 3	Inspection items		Inspection of water temperature sensor connector
	Maintenance item		Inspection of connector
	Inspection condition		–
	Requirements		• Connector is properly connected. • No trace of water entry is found. • No corrosion is found in terminal. • Connection to terminal is appropriate.
	Inspection result (Is the judging standard satisfied?)	YES	Go to step 4.
		NO	Modify connector.

Step 4	Inspection items		Inspection by electronic control unit connector (water temperature sensor 1)
	Maintenance item		Measure value of resistance between connector (GE96A) terminals No. 40 and No. 41.
	Inspection condition		Disconnect electronic control unit from harness and measure from connection side of harness connector.
	Requirements		• 20°C {68°F}: 2.45 ± 0.14 kΩ • 80°C {176°F}: 0.32 kΩ (reference value) • 110°C {230°F}: 141.7 ± 2 kΩ
	Inspection result (Is the judging standard satisfied?)	YES	Go to step 6.
		NO	Go to step 5.

Step 5	Inspection items		Inspection of water temperature sensor 1 unit
	Maintenance item		Measure value of resistance between connector terminal No. 1 and 2.
	Inspection condition		• Put water temperature sensor 1 in container filled with engine oil. • Heat the oil to each of the specified temperatures. Stir the oil well while doing so.
	Requirements		• 20°C {68°F}: 2.45 ± 0.14 kΩ • 80°C {176°F}: 0.32 kΩ (reference value) • 110°C {230°F}: 141.7 ± 2 kΩ
	Inspection result (Is the judging standard satisfied?)	YES	Go to step 6.
		NO	Replacement of sensor

<Step 5 inspection diagram>

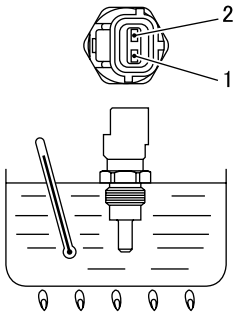

Step 6	Inspection items		Inspection by electronic control unit connector (water temperature sensor 2)
	Maintenance item		Measure value of resistance between connector (GE96A) terminals No. 34 and ground.
	Inspection condition		Disconnect electronic control unit from harness and measure from connection side of harness connector.
	Requirements		• –20°C {–4°F}: 24.8 ± 2.5 kΩ • 0°C {32°F}: 8.62 kΩ (reference value) • 20°C {68°F}: 3.25 ± 0.33 kΩ • 60°C {140°F}: 620 kΩ (reference value) • 80°C {176°F}: 300 kΩ (reference value)
	Inspection result (Is the judging standard satisfied?)	YES	Replacement of electronic control unit
		NO	Go to step 7.

Step 7	Inspection items		Inspection of water temperature sensor 2 unit
	Maintenance item		Measure value of resistance between connector terminal No. 2 and body.
	Inspection condition		• Put water temperature sensor 2 in container filled with engine oil. • Heat the oil to each of the specified temperatures. Stir the oil well while doing so.
	Requirements		• –20°C {–4°F}: 24.8 ± 2.5 kΩ • 0°C {32°F}: 8.62 kΩ (reference value) • 20°C {68°F}: 3.25 ± 0.33 kΩ • 60°C {140°F}: 620 kΩ (reference value) • 80°C {176°F}: 300 kΩ (reference value)
	Inspection result (Is the judging standard satisfied?)	YES	Replacement of electronic control unit
		NO	Replacement of sensor

<Step 7 inspection diagram>

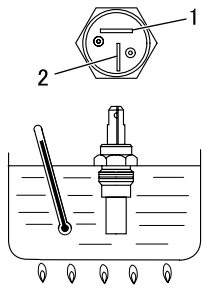

P19463

[Fault code]
Diagnosis code: P0122/Flash code: 24
[Monitor]
Failure of accelerator pedal position sensor 1
[Fault (outline)]
Low signal range check
[Diagnosis check]
- Accelerator pedal position sensor is monitored for output within specification.

[Code generation condition]
- Voltage from accelerator pedal position sensor 1 remains below 0.5 V for 1 second.
  (Warning lamp is lit and diagnosis code is displayed on first establishment of code generation condition.)

[Diagnosis check timing]
- Fault diagnosis is continuously performed during the driving cycle.

[Diagnostic requirement]
–

[Control effected by electronic control unit during fault]
- Accelerator pedal position sensor 2 is computed with accelerator pedal position sensor 1 only.
- In-use performance counter is stopped.
- Related fault check is stopped.

[Probable cause of trouble]
- Open-circuit or short-circuit of harness between electronic control unit and sensor
- Malfunction of each connector
- Malfunction of sensor
- Malfunction of electronic control unit

[Recoverability]
- Recovered if signal becomes normal with starter switch in ON position.
  (Warning lamp is extinguished and diagnosis code is cleared at fourth display of diagnosis code after recovery.)

[Electronic Control Unit Connection Diagram]

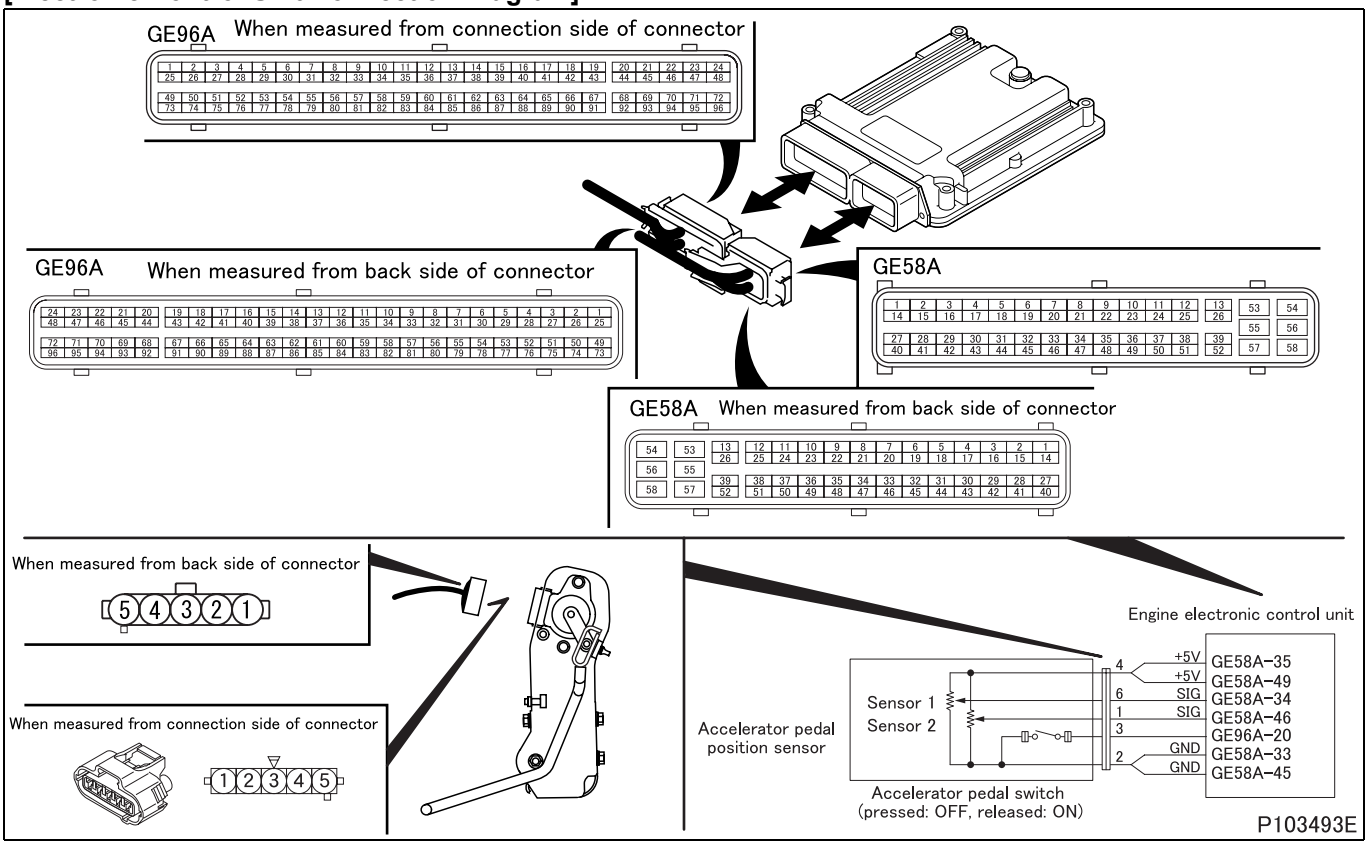

[Parts Identification and Location]

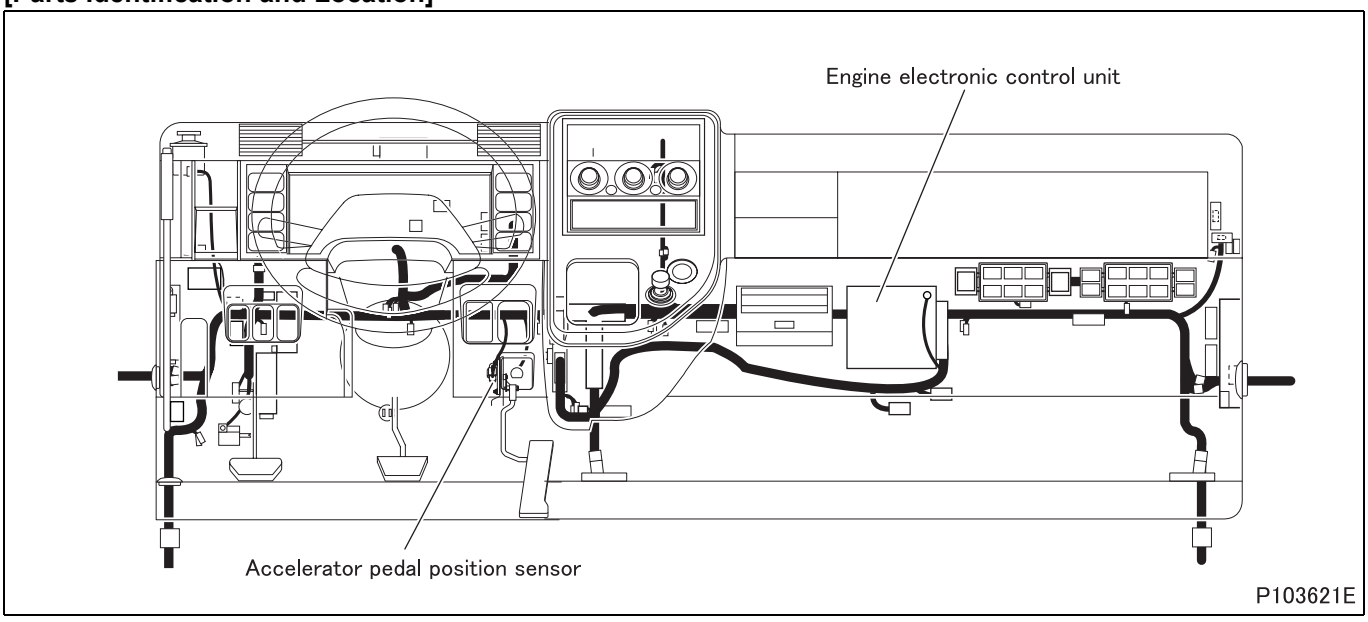

[Fault diagnosis]

- Perform checks in the sequence of the following steps.

Step 1	Inspection items		Inspection by control data
	Maintenance item		**<General Scanning Tool used>** • Measure “Accelerator Pedal Position 1”. **<Multi-Use Tester used>** • Measure item No. 40 “Accelerator sensor voltage 1” of Service Data.
	Inspection condition		–
	Requirements		**<General Scanning Tool used>** • Accelerator pedal not pressed: 0% • Accelerator pedal pressed: 100% **<Multi-Use Tester used>** • Accelerator pedal not pressed: 0.85 ± 0.1 V • Accelerator pedal pressed: 4.15 ± 0.1 V
	Inspection result (Is the judging standard satisfied?)	YES	Go to transient fault (See Gr00.).
		NO	Go to step 2.

Step 2	Inspection items		Inspection by electronic control unit connector (signal)
	Maintenance item		Measure value of voltage between connector (GE58A) terminal No. 34 (+) and No. 33 and No. 45 (–).
	Inspection condition		• Starter switch: ON • Engine is stopped. • Measure from back side of connector of harness with each device connected to harness.
	Requirements		• Accelerator pedal not pressed: 0.85 ± 0.1 V • Accelerator pedal pressed: 4.15 ± 0.1 V
	Inspection result (Is the judging standard satisfied?)	YES	Go to step 5.
		NO	Go to step 3.

Step 3	Inspection items		Inspection by electronic control unit connector (power supply)
	Maintenance item		Measure value of voltage between connector (GE58A) terminal No. 35 (+) and No. 33 (–).
	Inspection condition		• Starter switch: ON • Engine is stopped. • Measure from back side of connector of harness with each device connected to harness.
	Requirements		5 V
	Inspection result (Is the judging standard satisfied?)	YES	Go to step 4.
		NO	Go to step 5.

Step 4	Inspection items		Inspection by electronic control unit connector (ground)
	Maintenance item		Measure value of voltage between connector (GE58A) terminal No. 33 (+) and No. 53 (–).
	Inspection condition		• Starter switch: ON • Engine is stopped. • Measure from back side of connector of harness with each device connected to harness.
	Requirements		0 V
	Inspection result (Is the judging standard satisfied?)	YES	Go to step 6.
		NO	Go to step 5.

Step 5	Inspection items		Inspection of electronic control unit connector
	Maintenance item		Inspection of connector
	Inspection condition		–
	Requirements		• Connector is properly connected. • No trace of water entry is found. • No corrosion is found in terminal. • Connection to terminal is appropriate.
	Inspection result (Is the judging standard satisfied?)	YES	Go to step 12.
		NO	Modify connector.

Step 6	Inspection items		Inspection of sensor connector
	Maintenance item		Inspection of connector
	Inspection condition		–
	Requirements		• Connector is properly connected. • No trace of water entry is found. • No corrosion is found in terminal. • Connection to terminal is appropriate.
	Inspection result (Is the judging standard satisfied?)	YES	Go to step 7.
		NO	Modify connector.

Step 7	Inspection items		Inspection of accelerator pedal position sensor 1 unit
	Maintenance item		Measure value of voltage between connector terminal No. 5 (+) and 2 (–).
	Inspection condition		Apply voltage DC 5 V across connector terminals No. 4 (+) and 2 (–).

	Requirements		• Idle position A: 0.85 ± 0.1 V
			• Accelerator switch operating position B: 1.0 ± 0.24 V
			• Full load position C: 4.15 ± 0.1 V
			  • A: When accelerator lever is in contact with stopper
			  • B: When accelerator pedal is pressed until there is no continuity between terminals 2 and 3.
			  • C: When lever is in contact with full load stopper bolt

	Inspection result (Is the judging standard satisfied?)	YES	Go to step 8.
		NO	Adjustment of sensor (If the measurement deviates from the standard value after adjustment, replace the sensor.) (See “INSPECTION OF ELECTRICAL PARTS” – “INSPECTION OF ACCELERATOR PEDAL POSITION SENSOR”.)

<Step 7 inspection diagram>

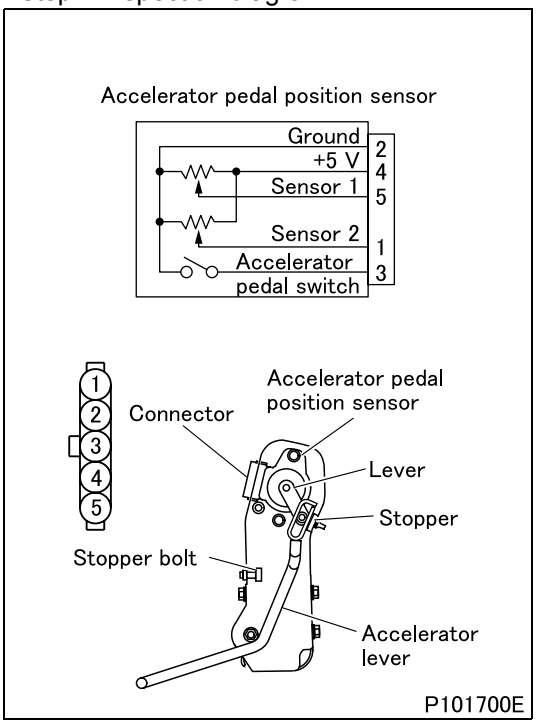

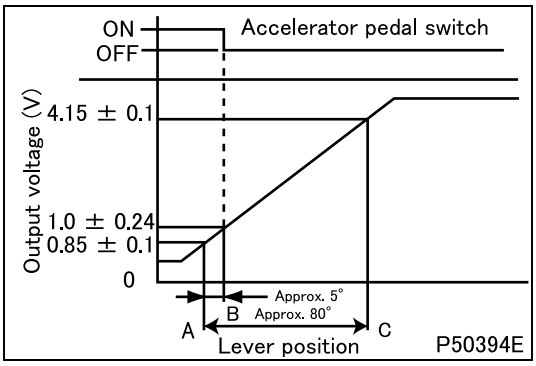

Step 8	Inspection items		Inspection by sensor connector
	Maintenance item		Measure value of voltage between connector terminal No. 4 (+) and 2 (–).
	Inspection condition		• Starter switch: ON • Engine is stopped. • Measure from back side of connector of harness with each device connected to harness.
	Requirements		5 V
	Inspection result (Is the judging standard satisfied?)	YES	Go to step 10.
		NO	Go to step 9.

Step 9	Inspection items		Inspection of harness between electronic control unit and sensor (power supply)
	Maintenance item		Check circuit between electronic control unit connector (GE58A) terminal No. 35 and sensor connector terminal No. 4.
	Inspection condition		Disconnect each device from harness and measure from connection side of harness connector. (As connector terminal is too small, use extra fine test lead/probe.)
	Requirements		There is continuity.
	Inspection result (Is the judging standard satisfied?)	YES	Go to step 12.
		NO	Modify harness.

Step 10	Inspection items		Inspection of harness between electronic control unit and sensor (ground)
	Maintenance item		Check circuit between electronic control unit connector (GE58A) terminal No. 33 and sensor connector terminal No. 2.
	Inspection condition		Disconnect each device from harness and measure from connection side of harness connector. (As connector terminal is too small, use extra fine test lead/probe.)
	Requirements		There is continuity.
	Inspection result (Is the judging standard satisfied?)	YES	Go to step 11.
		NO	Modify harness.

Step 11	Inspection items		Inspection of harness between electronic control unit and sensor (signal)
	Maintenance item		Check circuit between electronic control unit connector (GE58A) terminal No. 34 and sensor connector terminal No. 5.
	Inspection condition		Disconnect each device from harness and measure from connection side of harness connector. (As connector terminal is too small, use extra fine test lead/probe.)
	Requirements		There is continuity.
	Inspection result (Is the judging standard satisfied?)	YES	Go to step 12.
		NO	Modify harness.

Step 12	Inspection items		Inspection by control data
	Maintenance item		**<General Scanning Tool used>** • Measure item “Accelerator Pedal Position 1”. **<Multi-Use Tester used>** • Measure item No. 40 “Accelerator sensor voltage 1” of Service Data.
	Inspection condition		–
	Requirements		**<General Scanning Tool used>** • Accelerator pedal not pressed: 0% • Accelerator pedal pressed: 100% **<Multi-Use Tester used>** • Accelerator pedal not pressed: 0.85 ± 0.1 V • Accelerator pedal pressed: 4.15 ± 0.1 V
	Inspection result (Is the judging standard satisfied?)	YES	Go to transient fault (See Gr00.).
		NO	Replacement of electronic control unit

[Fault code]
Diagnosis code: P0123/Flash code: 24
[Monitor]
Failure of accelerator pedal position sensor 1
[Fault (outline)]
High signal range check
[Diagnosis check]
- Accelerator pedal position sensor is monitored for output within specification.

[Code generation condition]
- Voltage from accelerator pedal position sensor 1 remains over 4.7 V for 1 second.
  (Warning lamp is lit and diagnosis code is displayed on first establishment of code generation condition.)

[Diagnosis check timing]
- Fault diagnosis is continuously performed during the driving cycle.

[Diagnostic requirement]
–

[Control effected by electronic control unit during fault]
- Accelerator pedal position sensor 2 is computed with accelerator pedal position sensor 1 only.
- In-use performance counter is stopped.
- Related fault check is stopped.

[Probable cause of trouble]
- Open-circuit or short-circuit of harness between electronic control unit and sensor
- Malfunction of each connector
- Malfunction of sensor
- Malfunction of electronic control unit

[Recoverability]
- Recovered if signal becomes normal with starter switch in ON position.
  (Warning lamp is extinguished and diagnosis code is cleared at fourth display of diagnosis code after recovery.)

[Electronic Control Unit Connection Diagram]

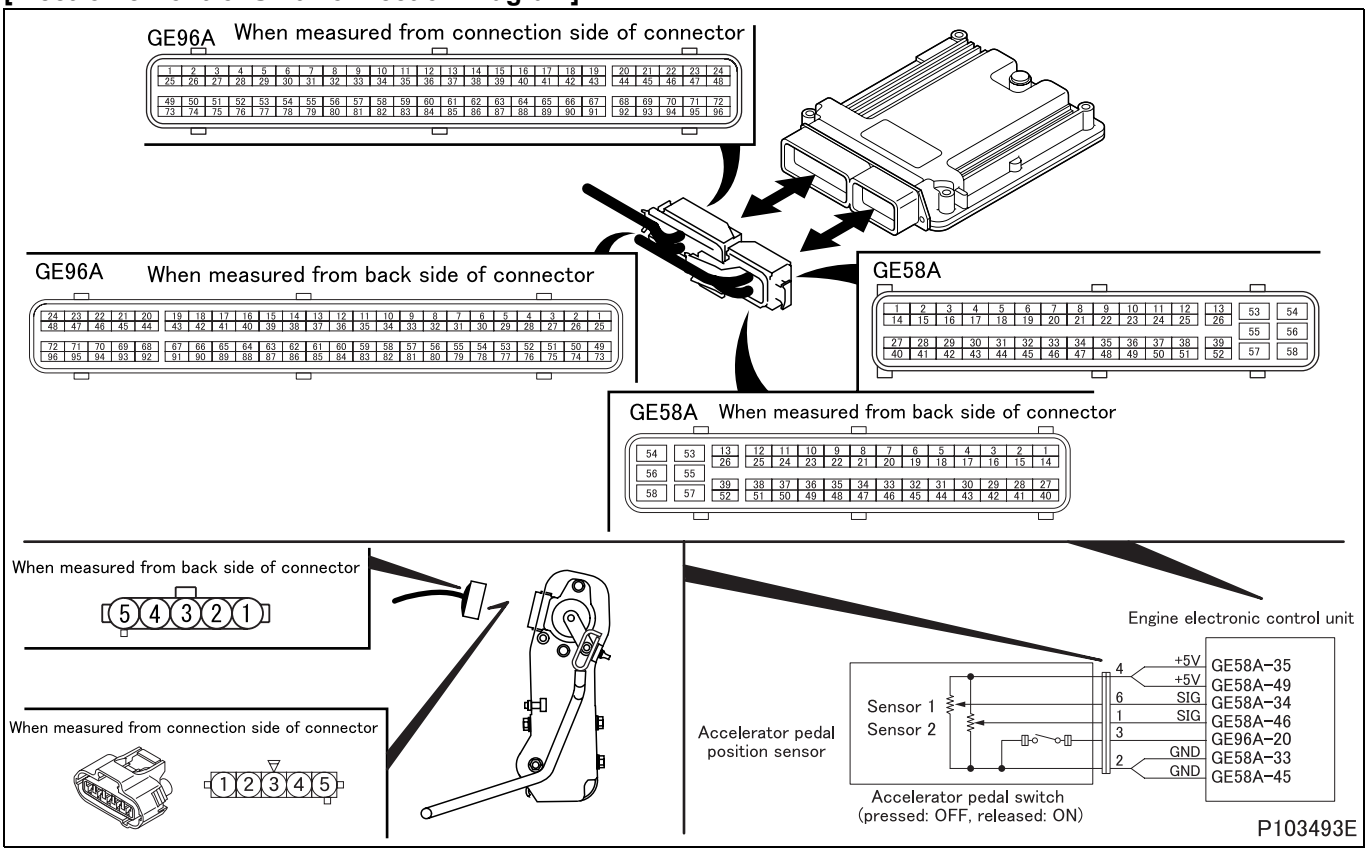

[Parts Identification and Location]

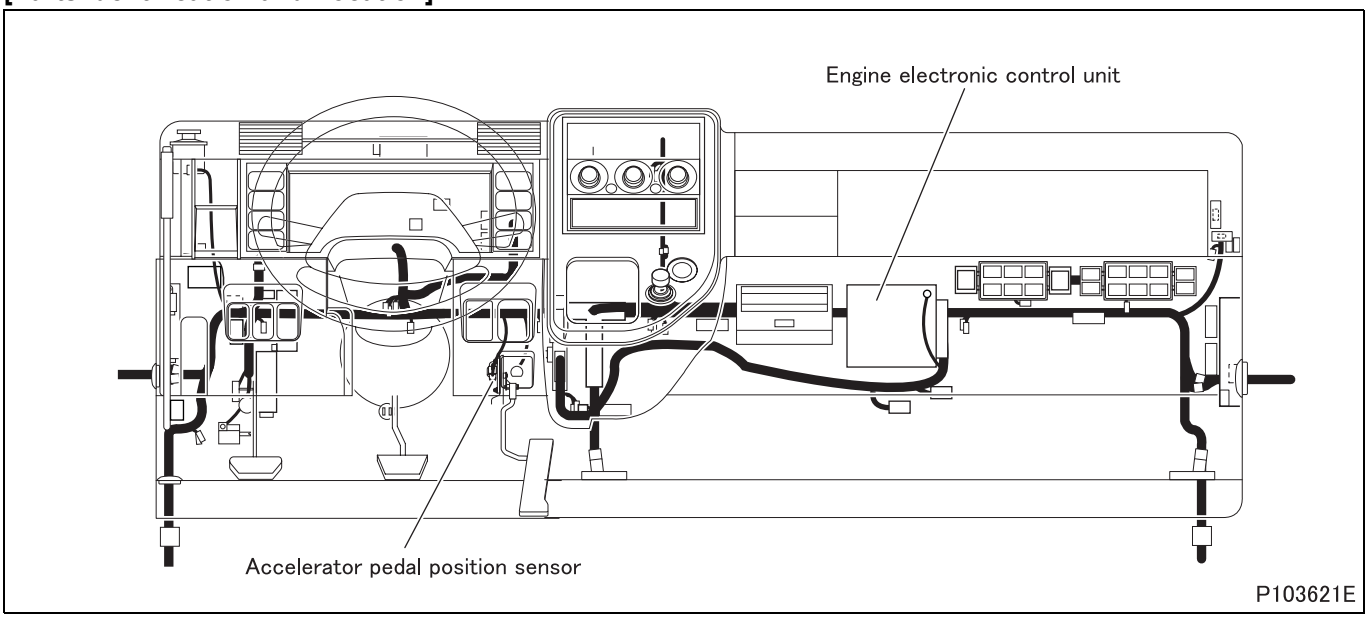

[Fault diagnosis]

- Perform checks in the sequence of the following steps.

Step 1	Inspection items		Inspection by control data
	Maintenance item		**<General Scanning Tool used>** • Measure item “Accelerator Pedal Position 1”. **<Multi-Use Tester used>** • Measure item No. 40 “Accelerator sensor voltage 1” of Service Data.
	Inspection condition		–
	Requirements		**<General Scanning Tool used>** • Accelerator pedal not pressed: 0% • Accelerator pedal pressed: 100% **<Multi-Use Tester used>** • Accelerator pedal not pressed: 0.85 ± 0.1 V • Accelerator pedal pressed: 4.15 ± 0.1 V
	Inspection result (Is the judging standard satisfied?)	YES	Go to transient fault (See Gr00.).
		NO	Go to step 2.

Step 2	Inspection items		Inspection by electronic control unit connector (signal)
	Maintenance item		Measure value of voltage between connector (GE58A) terminal No. 34 (+) and No. 33 and No. 45 (–).
	Inspection condition		• Starter switch: ON • Engine is stopped. • Measure from back side of connector of harness with each device connected to harness.
	Requirements		• Accelerator pedal not pressed: 0.85 ± 0.1 V • Accelerator pedal pressed: 4.15 ± 0.1 V
	Inspection result (Is the judging standard satisfied?)	YES	Go to step 5.
		NO	Go to step 3.

Step 3	Inspection items		Inspection by electronic control unit connector (power supply)
	Maintenance item		Measure value of voltage between connector (GE58A) terminal No. 35 (+) and No. 33 (–).
	Inspection condition		• Starter switch: ON • Engine is stopped. • Measure from back side of connector of harness with each device connected to harness.
	Requirements		5 V
	Inspection result (Is the judging standard satisfied?)	YES	Go to step 4.
		NO	Go to step 5.

Step 4	Inspection items		Inspection by electronic control unit connector (ground)
	Maintenance item		Measure value of voltage between connector (GE58A) terminal No. 33 (+) and No. 53 (–).
	Inspection condition		• Starter switch: ON • Engine is stopped. • Measure from back side of connector of harness with each device connected to harness.
	Requirements		0 V
	Inspection result (Is the judging standard satisfied?)	YES	Go to step 6.
		NO	Go to step 5.

Step 5	Inspection items		Inspection of electronic control unit connector
	Maintenance item		Inspection of connector
	Inspection condition		–
	Requirements		• Connector is properly connected. • No trace of water entry is found. • No corrosion is found in terminal. • Connection to terminal is appropriate.
	Inspection result (Is the judging standard satisfied?)	YES	Go to step 12.
		NO	Modify connector.

Step 6	Inspection items		Inspection of sensor connector
	Maintenance item		Inspection of connector
	Inspection condition		–
	Requirements		• Connector is properly connected. • No trace of water entry is found. • No corrosion is found in terminal. • Connection to terminal is appropriate.
	Inspection result (Is the judging standard satisfied?)	YES	Go to step 7.
		NO	Modify connector.

Step 7	Inspection items		Inspection of accelerator pedal position sensor 1 unit
	Maintenance item		Measure value of voltage between connector terminal No. 5 (+) and 2 (–).
	Inspection condition		Apply voltage DC 5 V across connector terminals No. 4 (+) and 2 (–).

	Requirements		• Idle position A: 0.85 ± 0.1 V
			• Accelerator switch operating position B: 1.0 ± 0.24 V
			• Full load position C: 4.15 ± 0.1 V
			  • A: When accelerator lever is in contact with stopper
			  • B: When accelerator pedal is pressed until there is no continuity between terminals 2 and 3.
			  • C: When lever is in contact with full load stopper bolt

	Inspection result (Is the judging standard satisfied?)	YES	Go to step 8.
		NO	Adjustment of sensor (If the measurement deviates from the standard value after adjustment, replace the sensor.) (See “INSPECTION OF ELECTRICAL PARTS” – “INSPECTION OF ACCELERATOR PEDAL POSITION SENSOR”.)

<Step 7 inspection diagram>

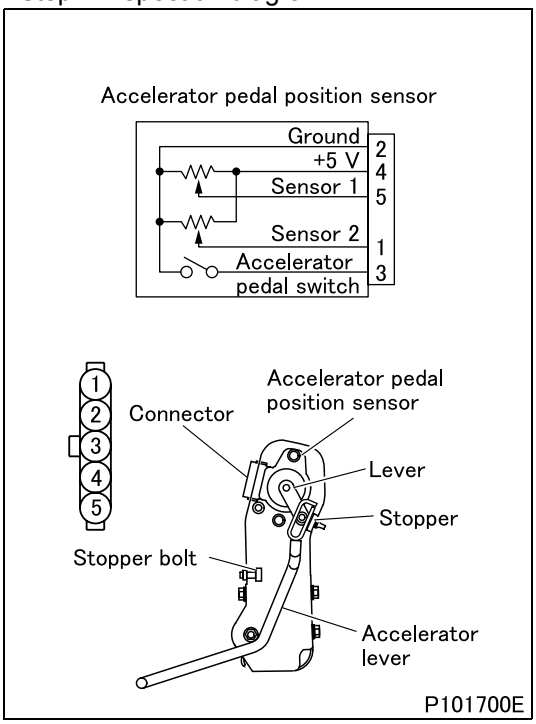

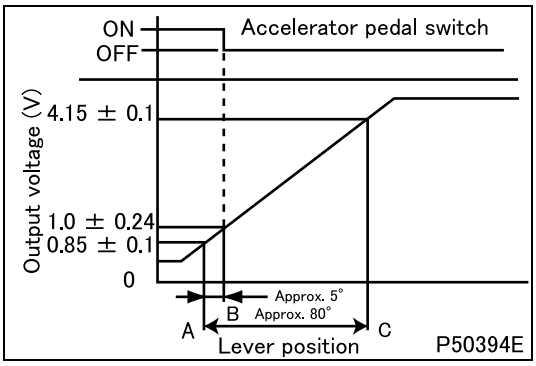

Step 8	Inspection items		Inspection by sensor connector
	Maintenance item		Measure value of voltage between connector terminal No. 4 (+) and 2 (–).
	Inspection condition		• Starter switch: ON • Engine is stopped. • Measure from back side of connector of harness with each device connected to harness.
	Requirements		5 V
	Inspection result (Is the judging standard satisfied?)	YES	Go to step 10.
		NO	Go to step 9.

Step 9	Inspection items		Inspection of harness between electronic control unit and sensor (power supply)
	Maintenance item		Check circuit between electronic control unit connector (GE58A) terminal No. 35 and sensor connector terminal No. 4.
	Inspection condition		Disconnect each device from harness and measure from connection side of harness connector. (As connector terminal is too small, use extra fine test lead/probe.)
	Requirements		There is continuity.
	Inspection result (Is the judging standard satisfied?)	YES	Go to step 12.
		NO	Modify harness.

Step 10	Inspection items		Inspection of harness between electronic control unit and sensor (ground)
	Maintenance item		Check circuit between electronic control unit connector (GE58A) terminal No. 33 and sensor connector terminal No. 2.
	Inspection condition		Disconnect each device from harness and measure from connection side of harness connector. (As connector terminal is too small, use extra fine test lead/probe.)
	Requirements		There is continuity.
	Inspection result (Is the judging standard satisfied?)	YES	Go to step 11.
		NO	Modify harness.

Step 11	Inspection items		Inspection of harness between electronic control unit and sensor (signal)
	Maintenance item		Check circuit between electronic control unit connector (GE58A) terminal No. 34 and sensor connector terminal No. 5.
	Inspection condition		Disconnect each device from harness and measure from connection side of harness connector. (As connector terminal is too small, use extra fine test lead/probe.)
	Requirements		There is continuity.
	Inspection result (Is the judging standard satisfied?)	YES	Go to step 12.
		NO	Modify harness.

Step 12	Inspection items		Inspection by control data
	Maintenance item		**<General Scanning Tool used>** • Measure item “Accelerator Pedal Position 1”. **<Multi-Use Tester used>** • Measure item No. 40 “Accelerator sensor voltage 1” of Service Data.
	Inspection condition		–
	Requirements		**<General Scanning Tool used>** • Accelerator pedal not pressed: 0% • Accelerator pedal pressed: 100% **<Multi-Use Tester used>** • Accelerator pedal not pressed: 0.85 ± 0.1 V • Accelerator pedal pressed: 4.15 ± 0.1 V
	Inspection result (Is the judging standard satisfied?)	YES	Go to transient fault (See Gr00.).
		NO	Replacement of electronic control unit

[Fault code]
Diagnosis code: P0127/Flash code: 27
[Monitor]
Abnormality of intercooler
[Fault (outline)]
Intercooler failure
[Diagnosis check]
- Intercooler outlet temperature is monitored to determine if it is within specified value.

[Code generation condition]
- Intercooler outlet temperature exceeds predetermined value.
  (Warning lamp is lit and diagnosis code is displayed on third establishment of code generation condition.)

[Diagnosis check timing]
- Fault diagnosis is performed only once during the driving cycle.

[Diagnostic requirement]
- Variation in engine speed: less than 300 rpm/s
- Exhaust shutter: open
- Engine speed: 1400 to 3000 rpm
- Vehicle speed: more than 20 km/h {12.4 MPH}
- Water temperature: 64 to 100°C {147 to 212°F}
- Approximate environment atmospheric temperature: –7 to 60°C {19 to 140°F}
- Engine running time: more than 60 seconds
- Turbocharger actuator: in order
- Controller area network communication of turbocharger electronic drive unit: in order
- Atmospheric pressure sensor: in order
- Boost pressure sensor: in order
- Water temperature sensor: in order
- Intake air temperature sensor: in order
- Sensor 5 V power supply: in order
- Battery voltage: in order

[Control effected by electronic control unit during fault]
- Diesel particulate filter regeneration is stopped.
- Related fault check is stopped.

[Probable cause of trouble]
- Abnormality of intercooler (clogging, leak)
- Malfunction of cooling fan and automatic cooling fan coupling unit

[Recoverability]
- Recovered if signal becomes normal with starter switch in ON position.
  (Warning lamp is extinguished and diagnosis code is cleared at fourth display of diagnosis code after recovery.)

[Fault diagnosis]

- Perform checks in the sequence of the following steps.

Step 1	Inspection items		Inspection by control data
	Maintenance item		Check if following diagnosis codes occur simultaneously. • P0112 “INT Air Temp SNSR (Low)” • P0113 “INT Air Temp SNSR (High)” • P2199 “EGR Temp Sensor (Correlation)”
	Inspection condition		• Starter switch: ON • Do not start engine.
	Requirements		No codes occur.
	Inspection result (Is the judging standard satisfied?)	YES	Go to step 2.
		NO	Inspect diagnosis code that is occurring.

Step 2	Inspection items		Inspection of intake air piping and hose for air leak
	Maintenance item		Check for leak.
	Inspection condition		Engine at high idle speed or vehicle running
	Requirements		Free of air leakage or noise
	Inspection result (Is the judging standard satisfied?)	YES	Go to step 3.
		NO	Clamp is tightened.

Step 3	Inspection items		Inspection of intercooler for leak and clogging
	Maintenance item		Check intercooler for leak.
	Inspection condition		–
	Requirements		Free of air leakage or not clogged.
	Inspection result (Is the judging standard satisfied?)	YES	Go to step 4.
		NO	Replacement of intercooler

Step 4	Inspection items		Inspection of turbocharger boost pressure
	Maintenance item		Check of boost pressure
	Inspection condition		For boost pressure measurement and correction data calculation, see Gr15.
	Requirements		Boost pressure is normal.
	Inspection result (Is the judging standard satisfied?)	YES	Go to transient fault (See Gr00.).
		NO	Replacement of turbocharger

[Fault code]
Diagnosis code: P0128/Flash code: 5
[Monitor]
Failure of thermostat
[Fault (outline)]
Below regulating temperature
[Diagnosis check]
- Engine coolant temperature is monitored for rise up to standard level.

[Code generation condition]
- Actual engine coolant temperature is low at the point of predetermined time necessary for engine warm-up having passed.

[Diagnosis check timing]
- Fault diagnosis is performed only once during the driving cycle.

[Diagnostic requirement]
- Water temperature at engine start: –7 to 45°C {19 to 113°F}
- Intake air temperature at engine start: above –7°C {19°F}
- Proportion of engine running time at idle: less than 50%
- When monitoring completed: This diagnosis code has already been cleared.
- Water temperature sensor: in order
- Boost pressure sensor: in order
- Intake air temperature sensor: in order
- Sensor 5 V power supply: in order
- Battery voltage: in order
- MPROP (rail pressure control valve): in order
- Injector: in order

[Control effected by electronic control unit during fault]
- Effects no special control.

[Probable cause of trouble]
- Malfunction of thermostat unit (abnormality of valve opening temperature)
- Malfunction of radiator unit
- Malfunction of cooling fan and automatic cooling fan coupling unit

[Recoverability]
- Recovered if signal becomes normal when starter switch is turned OFF to ON (power supply resumed to electronic control unit).
  (Warning lamp is extinguished and diagnosis code is cleared at fourth display of diagnosis code after recovery.)

[Fault diagnosis]

- Perform checks in the sequence of the following steps.

Step 1	Inspection items		Inspection by control data
	Maintenance item		Check if following diagnosis codes occur simultaneously. • P0117 “Water Temp SNSR (Low)” • P0118 “Water Temp SNSR (High)” • P011A “Water Temp SNSR”
	Inspection condition		• Starter switch: ON • Engine: started
	Requirements		No codes occur.
	Inspection result (Is the judging standard satisfied?)	YES	Go to step 2.
		NO	Inspect diagnosis code that is occurring.

Step 2	Inspection items		Inspection of thermostat
	Maintenance item		Check thermostat for valve opening temperature and valve lift
	Inspection condition		For measurement of thermostat valve opening temperature and valve lift, see shop manual.
	Requirements		Thermostat is in normal condition.
	Inspection result (Is the judging standard satisfied?)	YES	Go to transient fault (See Gr00.).
		NO	Replacement of thermostat

[Fault code]
Diagnosis code: P0148/Flash code: 22
[Monitor]
Abnormality of common rail pressure (pressure: low)
[Fault (outline)]
Plausibility
[Diagnosis check]
- Common rail pressure is monitored.

[Code generation condition]
- Common rail pressure remains below 100 bar for 30 seconds.
  (Warning lamp is lit and diagnosis code is displayed on first establishment of code generation condition.)

[Diagnosis check timing]
- Fault diagnosis is performed only once during the driving cycle.

[Diagnostic requirement]
–

[Control effected by electronic control unit during fault]
- Engine stopped

[Probable cause of trouble]
- Malfunction of supply pump
- Malfunction of pressure limiter
- Airtight malfunction of injector
- Plugged fuel system
- Fuel leakage
- Malfunction of common rail pressure sensor

[Recoverability]
- Recovered if signal becomes normal when starter switch is turned OFF to ON (power supply resumed to electronic control unit).
  (At the same time as recovery, warning lamp is extinguished and diagnosis code is cleared.)

[Fault diagnosis]

- Perform checks in the sequence of the following steps.

Step 1	Inspection items		Inspection by control data
	Maintenance item		Check if following diagnosis codes occur simultaneously. • P0093 “CRS (Fuel Leak)” • P0148 “CRS (Fuel Delivery)” • P0191 “CRS Pressure SNSR (Plausibility)” • P0192 “CRS Pressure SNSR (Low)” • P0193 “CRS Pressure SNSR (High)” • P0201 “Injector M/V-Cylinder 1 (Load)” • P0202 “Injector M/V-Cylinder 2 (Load)” • P0203 “Injector M/V-Cylinder 3 (Load)” • P0204 “Injector M/V-Cylinder 4 (Load)” • P0261 “Injector #1-A (Low)” • P0262 “Injector #1-A (High)” • P0263 “Injector #1-A (Plausibility)” • P0264 “Injector #2-A (Low)” • P0265 “Injector #2-A (High)” • P0266 “Injector #2-A (Plausibility)” • P0267 “Injector #3-A (Low)” • P0268 “Injector #3-A (High)” • P0269 “Injector #3-A (Plausibility)” • P0270 “Injector #4-A (Low)” • P0271 “Injector #4-A (High)” • P0272 “Injector #4-A (Plausibility)” • P0562 “Power Supply Voltage (Low)” • P0563 “Power Supply Voltage (High)” • P0607 “ECU System” • P060B “A/D Converter” • P061B “ECU Performance (Calc)” • P061C “ECU Performance (Ne)”
	Inspection condition		• Starter switch: ON • Do not start engine
	Requirements		No codes occur.
	Inspection result (Is the judging standard satisfied?)	YES	Go to step 2.
		NO	Inspect diagnosis code that is occurring.

Step 2	Inspection items		Checking of engine appearance
	Maintenance item		Check fuel system for fuel leak.
	Inspection condition		Starter switch: OFF
	Requirements		There is no fuel leak.
	Inspection result (Is the judging standard satisfied?)	YES	Go to step 3.
		NO	Go to step 6.

Step 3	Inspection items		Inspection of low pressure piping (fuel tank – supply pump)
	Maintenance item		Check suction pipe or hose for bend.
	Inspection condition		Starter switch: OFF
	Requirements		There is no bend on pipe or hose.
	Inspection result (Is the judging standard satisfied?)	YES	Go to step 4.
		NO	Correct and replace suction pipe or hose.

Step 4	Inspection items		Checking of air bleeding
	Maintenance item		Bleed air from fuel filter.
	Inspection condition		Starter switch: OFF
	Requirements		Problem is solved by bleeding air.
	Inspection result (Is the judging standard satisfied?)	YES	–
		NO	Go to step 5.

Step 5	Inspection items		Inspection of low pressure piping
	Maintenance item		Fuel filter
	Inspection condition		Starter switch: OFF
	Requirements		Problem is solved by replacing fuel filter.
	Inspection result (Is the judging standard satisfied?)	YES	–
		NO	Go to step 6.

Step 6	Inspection items		Inspection by control data
	Maintenance item		Perform actuator test item No. B2 “Fuel Leak Check”.
	Inspection condition		Engine start: At idle
	Requirements		There is no leak from supply pump.
	Inspection result (Is the judging standard satisfied?)	YES	Go to step 7.
		NO	Replacement of supply pump

Step 7	Inspection items		Inspection by control data
	Maintenance item		Perform actuator test item No. B2 “Fuel Leak Check”.
	Inspection condition		Engine start: At idle
	Requirements		There is no leak from fuel pipe between supply pump and rail.
	Inspection result (Is the judging standard satisfied?)	YES	Go to step 8.
		NO	Replacement of fuel pipe

Step 8	Inspection items		Inspection by control data
	Maintenance item		Perform actuator test item No. B2 “Fuel Leak Check”.
	Inspection condition		Engine start: At idle
	Requirements		There is no leak from rail.
	Inspection result (Is the judging standard satisfied?)	YES	Go to step 9.
		NO	Replacement of rail

Step 9	Inspection items		Inspection by control data
	Maintenance item		Perform actuator test item No. B2 “Fuel Leak Check”.
	Inspection condition		Engine start: At idle
	Requirements		There is no leak from fuel injection pipes (four) between injector and rail.
	Inspection result (Is the judging standard satisfied?)	YES	Go to step 10.
		NO	Replacement of injection pipe

Step 10	Inspection items		Inspection by control data
	Maintenance item		Perform actuator test item No. B2 “Fuel Leak Check”.
	Inspection condition		Engine start: At idle
	Requirements		There is no leak from injectors (four).
	Inspection result (Is the judging standard satisfied?)	YES	Go to step 11.
		NO	Replacement of injector

Step 11	Inspection items		Check inside of combustion chamber.
	Maintenance item		Check for fuel leak.
	Inspection condition		• After performing actuator test item No. B2 “Fuel Leak Check”, stop engine. • Remove glow plug, and check from glow plug mounting hole using bore scope.
	Requirements		Inside of combustion chamber is not wet.
	Inspection result (Is the judging standard satisfied?)	YES	Go to step 12.
		NO	Replacement of injector of object cylinder

Step 12	Inspection items		Replacement of rail (flow damper and pressure limiter abnormal)
	Maintenance item		–
	Inspection condition		–
	Requirements		Problem is solved by replacing rail.
	Inspection result (Is the judging standard satisfied?)	YES	–
		NO	Go to step 13.

Step 13	Inspection items		Replacement of supply pump
	Maintenance item		–
	Inspection condition		–
	Requirements		Problem is solved by replacing supply pump.
	Inspection result (Is the judging standard satisfied?)	YES	–
		NO	Replacement of injectors (four)

[Fault code]
Diagnosis code: P0182/Flash code: 41
[Monitor]
Failure of fuel temperature sensor
[Fault (outline)]
Low signal range check
[Diagnosis check]
- Fuel temperature sensor output voltage is monitored.

[Code generation condition]
- Fuel temperature sensor output voltage remains below 0.15 V for 3 seconds. (Diagnosis code is displayed on first establishment of code generation condition.)

[Diagnosis check timing]
- Fault diagnosis is continuously performed during the driving cycle.

[Diagnostic requirement]
–

[Control effected by electronic control unit during fault]
- Fuel temperature is fixed at backup value.
- Fuel system temperature is fixed at backup value.
- Related fault check is stopped.

[Probable cause of trouble]
- Open-circuit or short-circuit of harness between electronic control unit and fuel temperature sensor
- Malfunction of each connector
- Malfunction of sensor
- Malfunction of electronic control unit

[Recoverability]
- Recovered if signal becomes normal with starter switch in ON position.
  (Warning lamp is extinguished and diagnosis code is cleared simultaneously with recovery.)

[Electronic Control Unit Connection Diagram]

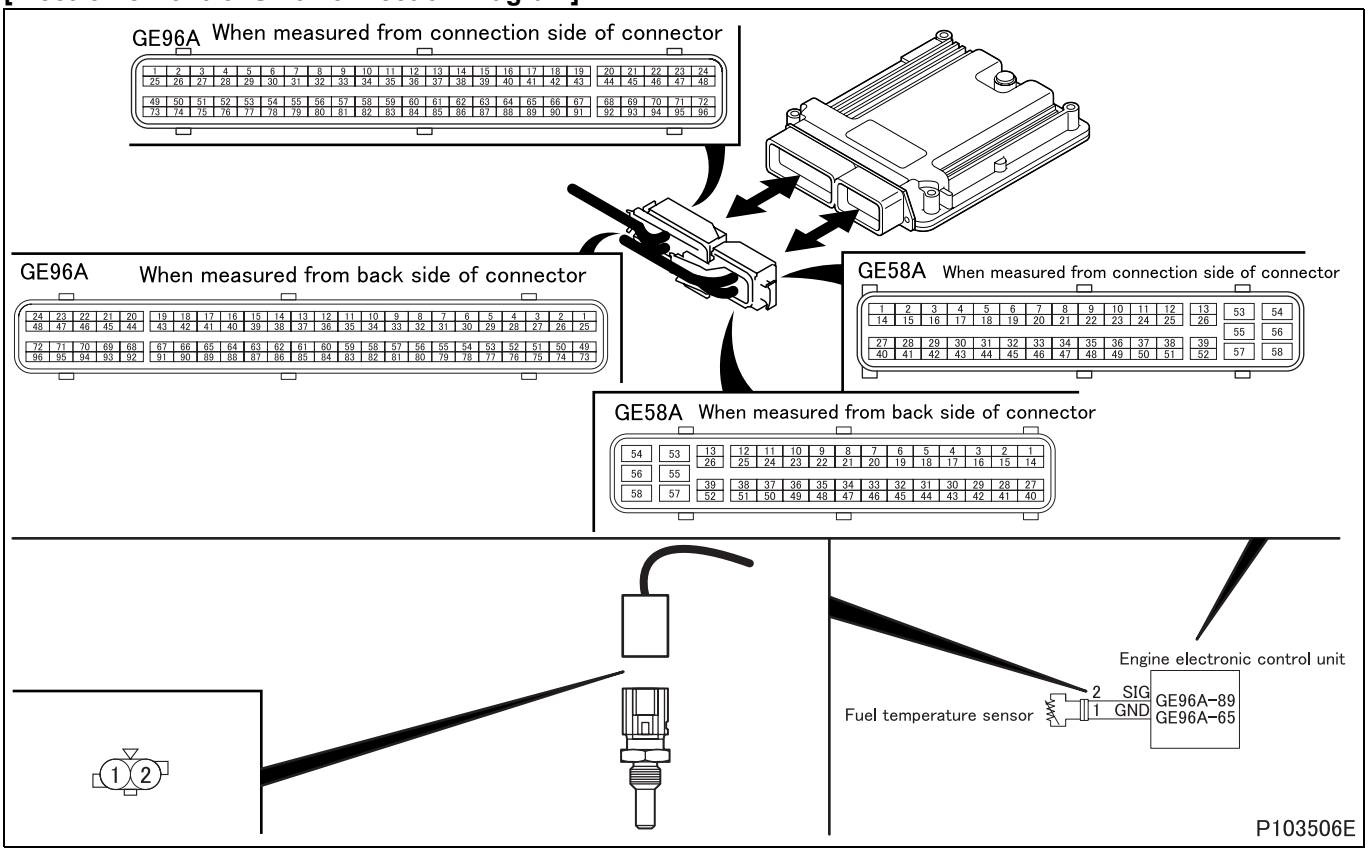

[Parts Identification and Location]

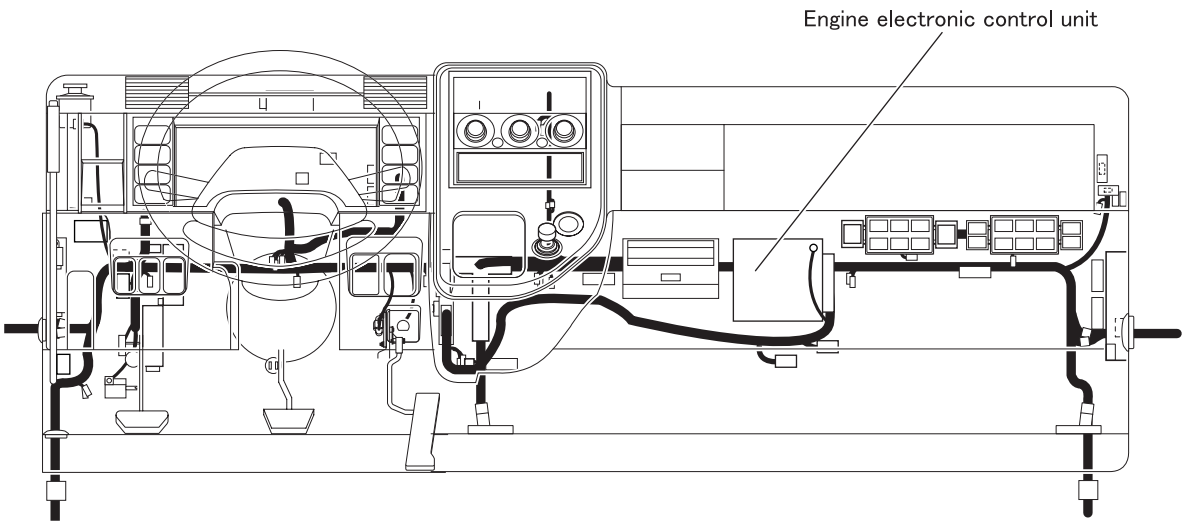

Left side view of engine

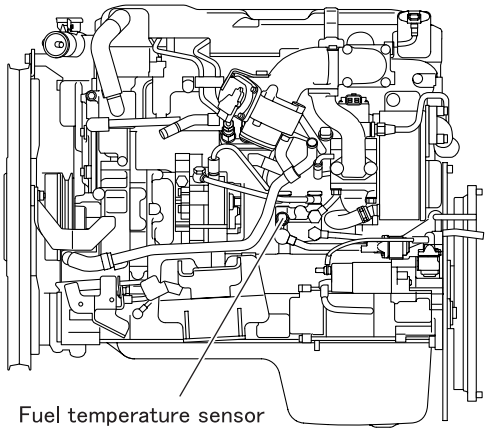

P103632E

[Fault diagnosis]

- Perform checks in the sequence of the following steps.

Step 1	Inspection items		Inspection by control data
	Maintenance item		Measure item No. 33 “Fuel Temperature (inlet)” of Service Data.
	Inspection condition		–
	Requirements		• When engine is cold: Temperature is equivalent to outside temperature. • While engine is warmed up: Temperature gradually increases. • When engine is stopped after warm-up: Temperature rise up just after engine stopped, then gradually decline.
	Inspection result (Is the judging standard satisfied?)	YES	Go to transient fault (See Gr00.).
		NO	Go to step 2.

Step 2	Inspection items		Inspection by electronic control unit connector
	Maintenance item		Measure value of voltage between connector (GE96A) terminal No. 65 and 89.
	Inspection condition		• Measure from back side of connector of harness with each device connected to harness. • Starter switch: ON
	Requirements		• 20°C {68°F}: 2.45 $^{+0.14}_{-0.13}$ kΩ • 80°C {176°F}: 0.318 ± 0.008 kΩ • 110°C {230°F}: 0.1417 ± 0.0018 kΩ
	Inspection result (Is the judging standard satisfied?)	YES	Go to step 3.
		NO	Go to step 4.

Step 3	Inspection items		Inspection of electronic control unit connector
	Maintenance item		Inspection of connector
	Inspection condition		–
	Requirements		• Connector is properly connected. • No trace of water entry is found. • No corrosion is found in terminal. • Connection to terminal is appropriate.
	Inspection result (Is the judging standard satisfied?)	YES	Go to step 8.
		NO	Modify connector.

Step 4	Inspection items		Inspection of sensor connector
	Maintenance item		Inspection of connector
	Inspection condition		–
	Requirements		• Connector is properly connected. • No trace of water entry is found. • No corrosion is found in terminal. • Connection to terminal is appropriate.
	Inspection result (Is the judging standard satisfied?)	YES	Go to step 5.
		NO	Modify connector.

Step 5	Inspection items		Inspection of fuel temperature sensor unit
	Maintenance item		Measure value of voltage between connector terminal No. 1 and 2.
	Inspection condition		Put sensor in container filled with engine oil.
	Requirements		• 20°C {68°F}: 2.45 $^{+0.14}_{-0.13}$ kΩ • 80°C {176°F}: 0.318 ± 0.008 kΩ • 110°C {230°F}: 0.1417 ± 0.0018 kΩ
	Inspection result (Is the judging standard satisfied?)	YES	Go to step 6.
		NO	Replacement of sensor

<Step 5 inspection diagram>

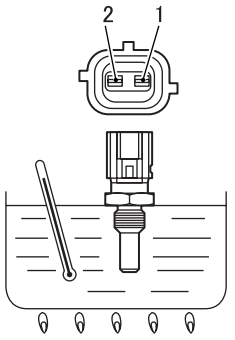

Step 6	Inspection items		Inspection of harness between electronic control unit and sensor (power supply)
	Maintenance item		Check circuit between sensor connector terminal No. 1 and electronic control unit connector (GE96A) terminal No. 89.
	Inspection condition		Disconnect each device from harness and measure from connection side of harness connector.
	Requirements		There is continuity.
	Inspection result (Is the judging standard satisfied?)	YES	Go to step 7.
		NO	Modify harness.

Step 7	Inspection items		Inspection of harness between electronic control unit and sensor (ground)
	Maintenance item		Check circuit between sensor connector terminal No. 2 and electronic control unit connector (GE96A) terminal No. 65.
	Inspection condition		Disconnect each device from harness and measure from connection side of harness connector.
	Requirements		There is continuity.
	Inspection result (Is the judging standard satisfied?)	YES	Go to step 8.
		NO	Modify harness.

Step 8	Inspection items		Inspection by control data
	Maintenance item		Measure item No. 33 “Fuel Temperature (inlet)” of Service Data.
	Inspection condition		–
	Requirements		• When engine is cold: Temperature is equivalent to outside temperature. • While engine is warmed up: Temperature gradually increases. • When engine is stopped after warm-up: Temperature rise up just after engine stopped, then gradually decline.
	Inspection result (Is the judging standard satisfied?)	YES	Go to transient fault (See Gr00.).
		NO	Replacement of electronic control unit

[Fault code]
Diagnosis code: P0183/Flash code: 41
[Monitor]
Failure of fuel temperature sensor
[Fault (outline)]
High signal range check
[Diagnosis check]
- Fuel temperature sensor output voltage is monitored.

[Code generation condition]
- Fuel temperature sensor output voltage remains above 4.8 V for 3 seconds. (Diagnosis code is displayed on first establishment of code generation condition.)

[Diagnosis check timing]
- Fault diagnosis is continuously performed during the driving cycle.

[Diagnostic requirement]
–

[Control effected by electronic control unit during fault]
- Fuel temperature is fixed at backup value.
- Fuel system temperature is fixed at backup value.
- Related fault check is stopped.

[Probable cause of trouble]
- Open-circuit or short-circuit of harness between electronic control unit and fuel temperature sensor
- Malfunction of each connector
- Malfunction of sensor
- Malfunction of electronic control unit

[Recoverability]
- Recovered if signal becomes normal with starter switch in ON position.
  (Warning lamp is extinguished and diagnosis code is cleared simultaneously with recovery.)

[Electronic Control Unit Connection Diagram]

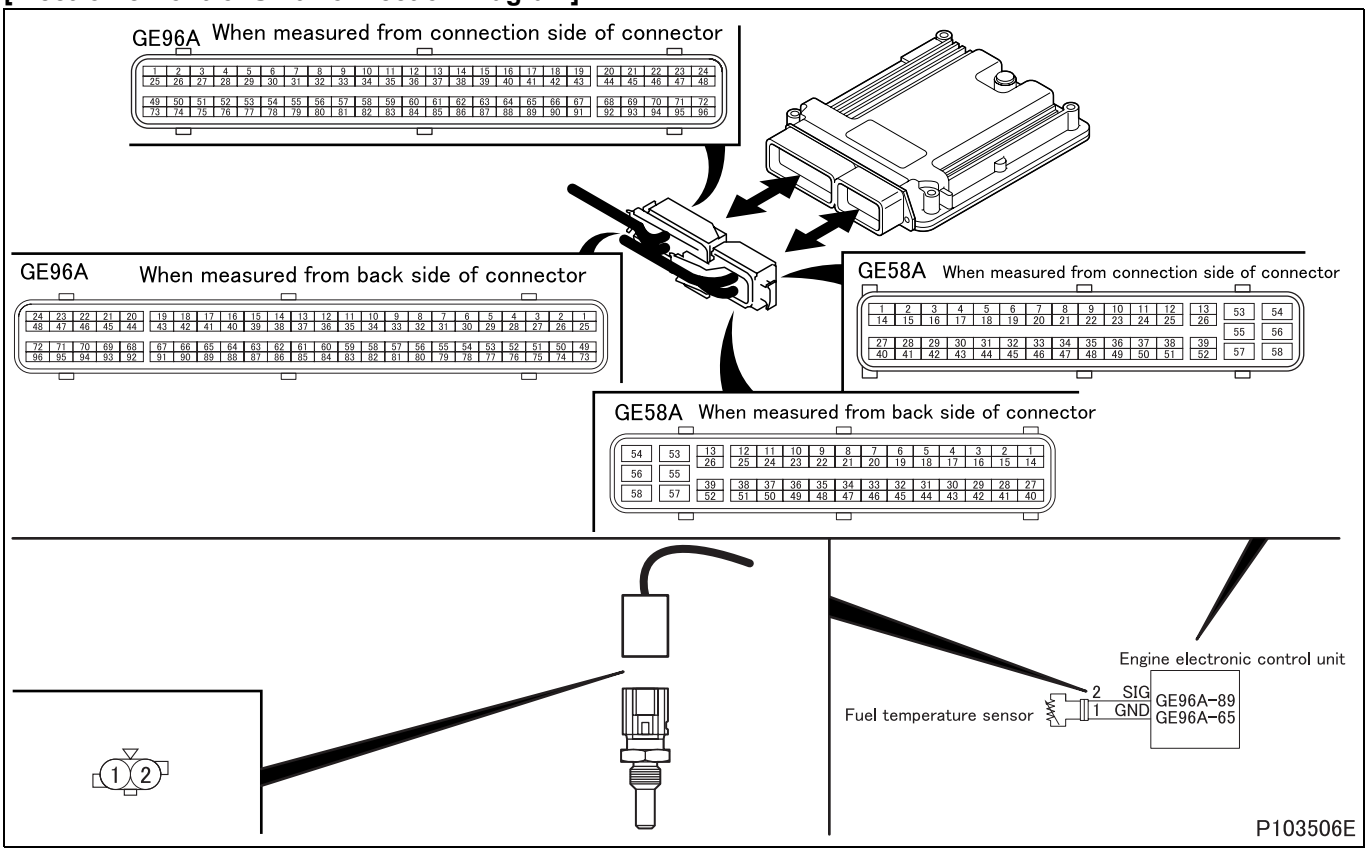

[Parts Identification and Location]

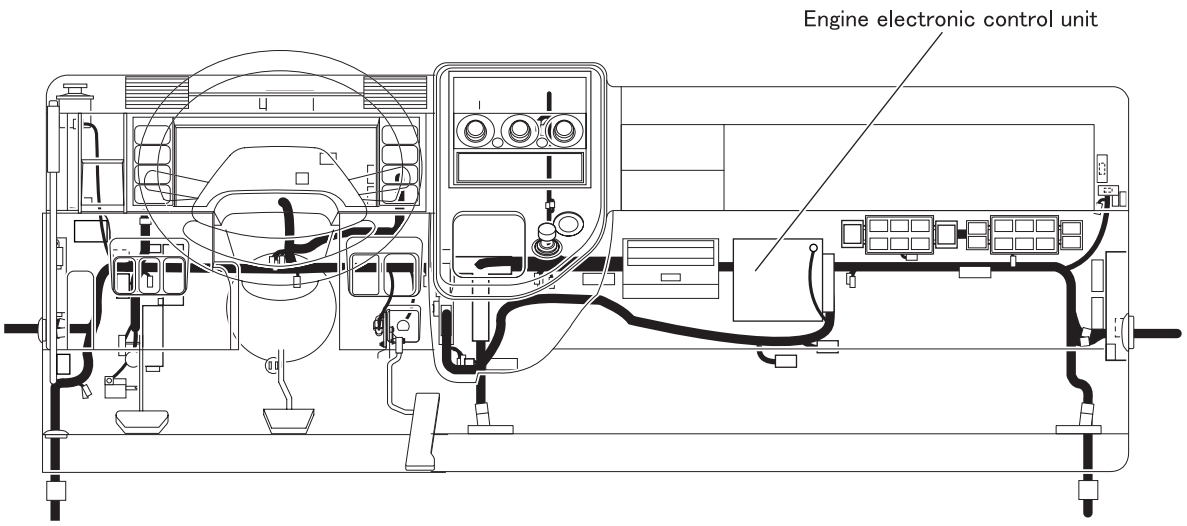

Left side view of engine

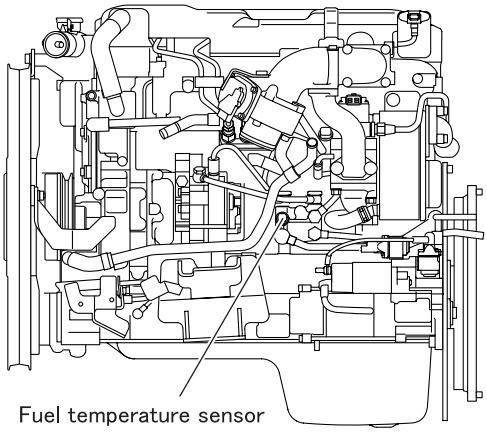

P103632E

[Fault diagnosis]

- Perform checks in the sequence of the following steps.

Step 1	Inspection items		Inspection by control data
	Maintenance item		Measure item No. 33 “Fuel Temperature (inlet)” of Service Data.
	Inspection condition		–
	Requirements		• When engine is cold: Temperature is equivalent to outside temperature. • While engine is warmed up: Temperature gradually increases. • When engine is stopped after warm-up: Temperature rise up just after engine stopped, then gradually decline.
	Inspection result (Is the judging standard satisfied?)	YES	Go to transient fault (See Gr00.).
		NO	Go to step 2.

Step 2	Inspection items		Inspection by electronic control unit connector
	Maintenance item		Measure value of voltage between connector (GE96A) terminal No. 65 and 89.
	Inspection condition		• Measure from back side of connector of harness with each device connected to harness. • Starter switch: ON
	Requirements		• 20°C {68°F}: 2.45 $^{+0.14}_{-0.13}$ kΩ • 80°C {176°F}: 0.318 ± 0.008 kΩ • 110°C {230°F}: 0.1417 ± 0.0018 kΩ
	Inspection result (Is the judging standard satisfied?)	YES	Go to step 3.
		NO	Go to step 4.

Step 3	Inspection items		Inspection of electronic control unit connector
	Maintenance item		Inspection of connector
	Inspection condition		–
	Requirements		• Connector is properly connected. • No trace of water entry is found. • No corrosion is found in terminal. • Connection to terminal is appropriate.
	Inspection result (Is the judging standard satisfied?)	YES	Go to step 8.
		NO	Modify connector.

Step 4	Inspection items		Inspection of sensor connector
	Maintenance item		Inspection of connector
	Inspection condition		–
	Requirements		• Connector is properly connected. • No trace of water entry is found. • No corrosion is found in terminal. • Connection to terminal is appropriate.
	Inspection result (Is the judging standard satisfied?)	YES	Go to step 5.
		NO	Modify connector.

Step 5	Inspection items		Inspection of fuel temperature sensor unit
	Maintenance item		Measure value of voltage between connector terminal No. 1 and 2.
	Inspection condition		Put sensor in container filled with engine oil.
	Requirements		• 20°C {68°F}: 2.45 $^{+0.14}_{-0.13}$ kΩ • 80°C {176°F}: 0.318 ± 0.008 kΩ • 110°C {230°F}: 0.1417 ± 0.0018 kΩ
	Inspection result (Is the judging standard satisfied?)	YES	Go to step 6.
		NO	Replacement of sensor

<Step 5 inspection diagram>

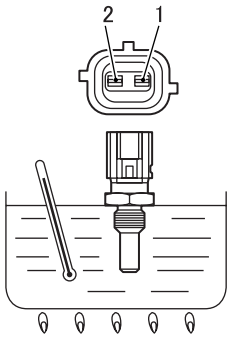

Step 6	Inspection items		Inspection of harness between electronic control unit and sensor (power supply)
	Maintenance item		Check circuit between sensor connector terminal No. 1 and electronic control unit connector (GE96A) terminal No. 89.
	Inspection condition		Disconnect each device from harness and measure from connection side of harness connector.
	Requirements		There is continuity.
	Inspection result (Is the judging standard satisfied?)	YES	Go to step 7.
		NO	Modify harness.

Step 7	Inspection items		Inspection of harness between electronic control unit and sensor (ground)
	Maintenance item		Check circuit between sensor connector terminal No. 2 and electronic control unit connector (GE96A) terminal No. 65.
	Inspection condition		Disconnect each device from harness and measure from connection side of harness connector.
	Requirements		There is continuity.
	Inspection result (Is the judging standard satisfied?)	YES	Go to step 8.
		NO	Modify harness.

Step 8	Inspection items		Inspection by control data
	Maintenance item		Measure item No. 33 “Fuel Temperature (inlet)” of Service Data.
	Inspection condition		–
	Requirements		• When engine is cold: Temperature is equivalent to outside temperature. • While engine is warmed up: Temperature gradually increases. • When engine is stopped after warm-up: Temperature rise up just after engine stopped, then gradually decline.
	Inspection result (Is the judging standard satisfied?)	YES	Go to transient fault (See Gr00.).
		NO	Replacement of electronic control unit

[Fault code]
Diagnosis code: P0191/Flash code: 11
[Monitor]
Characteristic abnormality of common rail pressure sensor
[Fault (outline)]
Offset
[Diagnosis check]
- Common rail pressure is monitored at starter switch ON.
- Common rail pressure is always monitored while driving.

[Code generation condition]
- Signal voltage from common rail pressure sensor remains excessively high (above 0.7 V) or low (below 0.3 V) for 3.2 seconds. (common rail pressure: above 100 bar or below –100 bar)
  (Diagnosis code is displayed on first establishment of code generation condition.)

[Diagnosis check timing]
- Fault diagnosis is performed each time when the starter switch is turned from “stop” to “start” position.

[Diagnostic requirement]
- Status of engine: stop to start
- Water temperature: above 0°C {32°F}
- Delay time after starter switch ON: more than 3.2 seconds

[Control effected by electronic control unit during fault]
- Engine torque is limited.
- Exhaust gas recirculation control is stopped.
- Throttle controls disabled
- Misfire detection is stopped.
- Auto cruise control stopped
- Traction control is stopped <Automatic transmission>
- Diesel particulate filter regeneration is stopped.
- Injector actuator test is inhibited.
- Turbocharger actuator test is inhibited.
- Related fault check is stopped.

[Probable cause of trouble]
- Open-circuit or short-circuit of harness between electronic control unit and sensor
- Malfunction of each connector
- Malfunction of sensor
- Malfunction of electronic control unit
- Malfunction of supply pump (overflow valve)
- Malfunction of pressure limiting valve
- Airtight malfunction of injector
- Plugged fuel system
- Fuel leakage
- Malfunction of common rail pressure sensor

[Recoverability]
- Recovered if signal becomes normal when starter switch is turned OFF to ON (power supply resumed to electronic control unit).
  (Warning lamp is extinguished and diagnosis code is cleared at fourth display of diagnosis code after recovery.)

[Electronic Control Unit Connection Diagram]

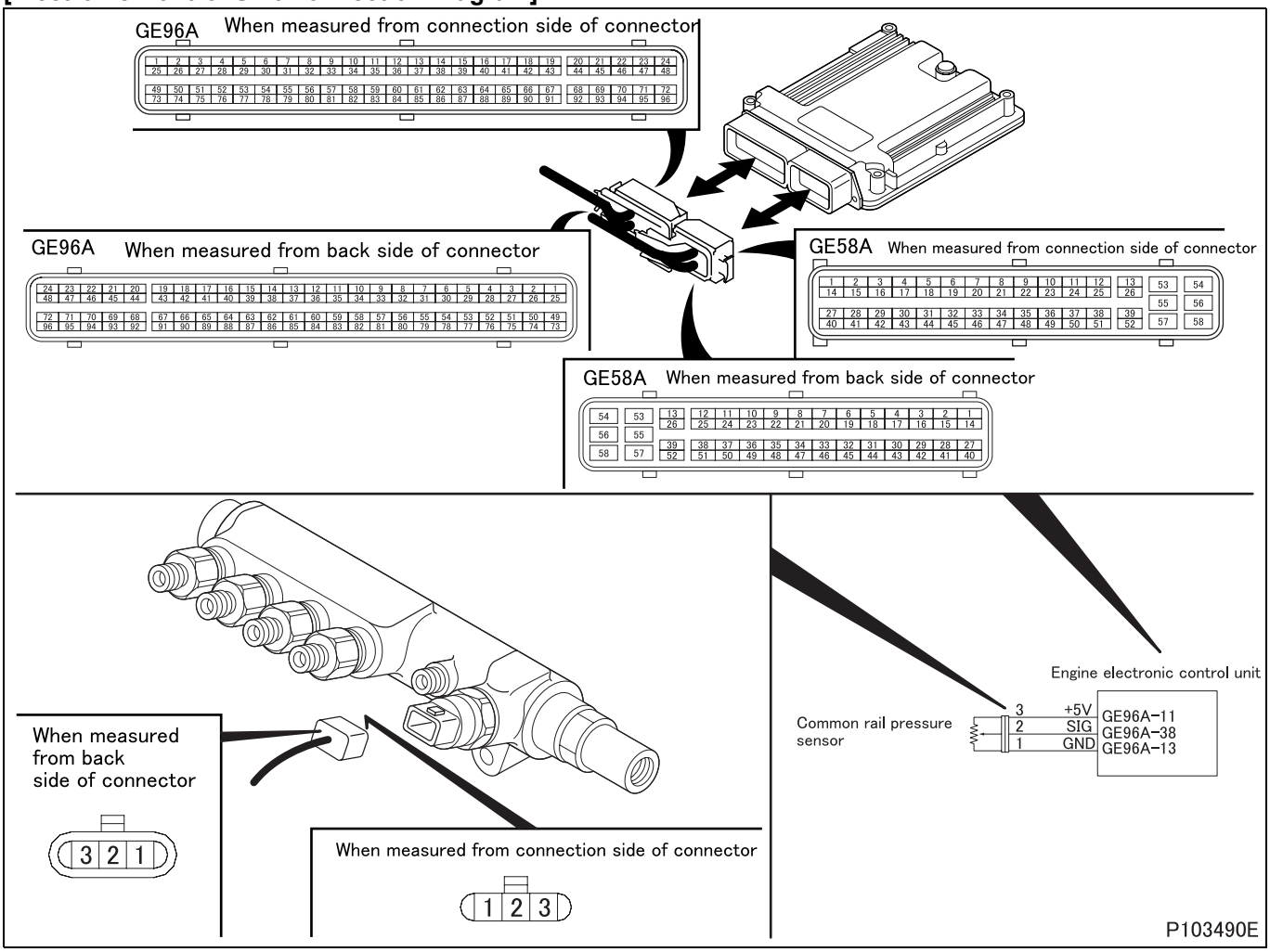

[Parts Identification and Location]

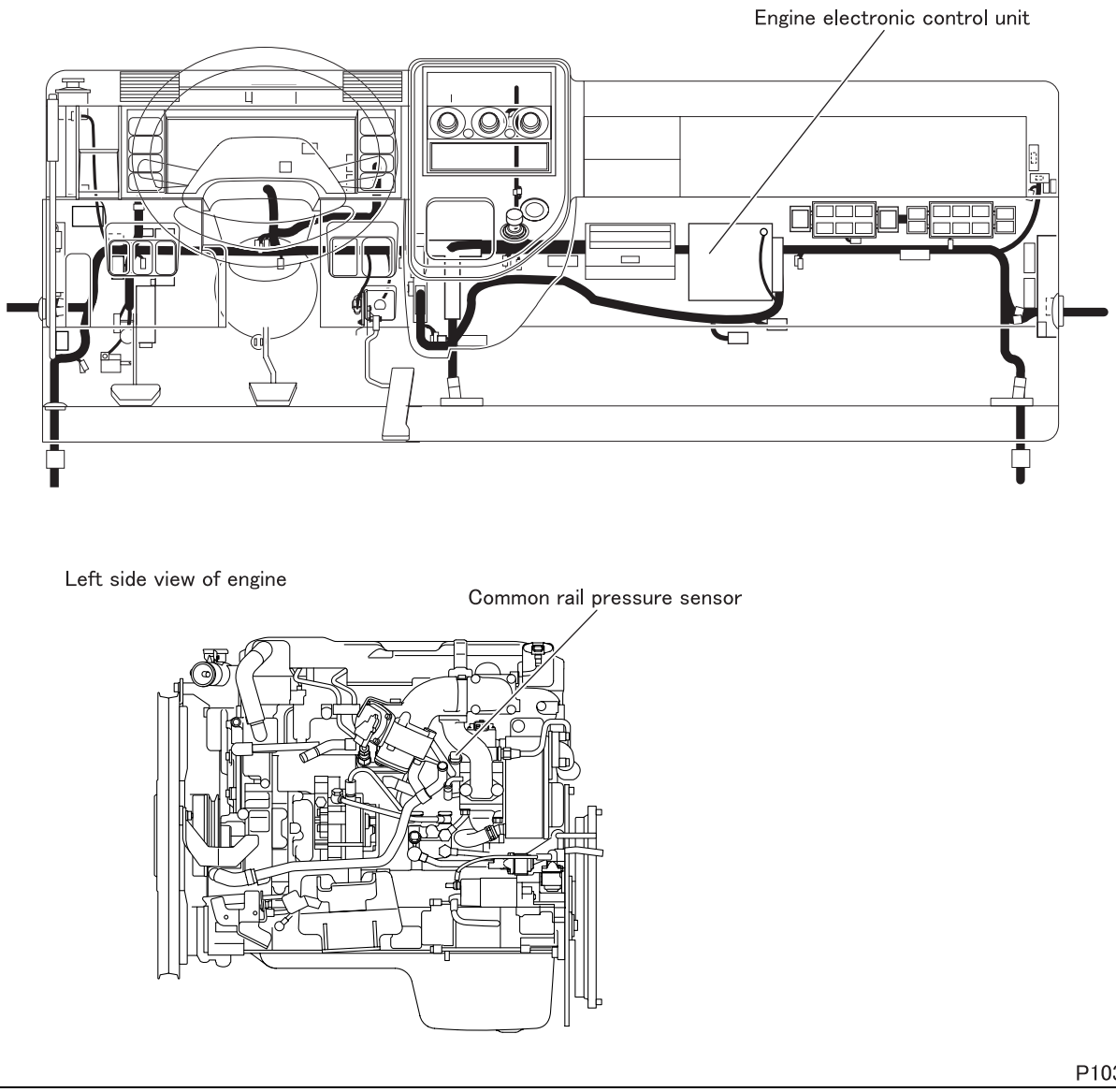

[Fault diagnosis]

- Perform checks in the sequence of the following steps.

Step 1	Inspection items		Inspection by control data
	Maintenance item		Check if following diagnosis codes occur simultaneously. • P0093 “CRS (Fuel Leak)” • P0148 “CRS (Fuel Delivery)” • P0191 “CRS Pressure SNSR (Plausibility)” • P0192 “CRS Pressure SNSR (Low)” • P0193 “CRS Pressure SNSR (High)” • P0201 “Injector M/V-Cylinder 1 (Load)” • P0202 “Injector M/V-Cylinder 2 (Load)” • P0203 “Injector M/V-Cylinder 3 (Load)” • P0204 “Injector M/V-Cylinder 4 (Load)” • P0261 “Injector #1-A (Low)” • P0262 “Injector #1-A (High)” • P0263 “Injector #1-A (Plausibility)” • P0264 “Injector #2-A (Low)” • P0265 “Injector #2-A (High)” • P0266 “Injector #2-A (Plausibility)” • P0267 “Injector #3-A (Low)” • P0268 “Injector #3-A (High)” • P0269 “Injector #3-A (Plausibility)” • P0270 “Injector #4-A (Low)” • P0271 “Injector #4-A (High)” • P0272 “Injector #4-A (Plausibility)” • P0562 “Power Supply Voltage (Low)” • P0563 “Power Supply Voltage (High)” • P0607 “ECU System” • P060B “A/D Converter” • P061B “ECU Performance (Calc)” • P061C “ECU Performance (Ne)”
	Inspection condition		• Starter switch: ON • Do not start engine.
	Requirements		No codes occur.
	Inspection result (Is the judging standard satisfied?)	YES	Go to step 2.
		NO	Inspect diagnosis code that is occurring.

Step 2	Inspection items		Inspection by control data
	Maintenance item		Measure item No. 1B “Actual Common Rail Pressure 2” of Service Data.
	Inspection condition		Starter switch: ON
	Requirements		0%
	Inspection result (Is the judging standard satisfied?)	YES	Go to transient fault (See Gr00.).
		NO	Go to step 3.

Step 3	Inspection items		Inspection by electronic control unit connector (signal)
	Maintenance item		Measure value of voltage between connector (GE96A) terminal No. 38 (+) and 13 (–).
	Inspection condition		• Measure from back side of connector of harness with each device connected to harness. • Starter switch: ON
	Requirements		0.5 to 4.5 V
	Inspection result (Is the judging standard satisfied?)	YES	Go to step 6.
		NO	Go to step 4.

Step 4	Inspection items		Inspection by electronic control unit connector (power supply)
	Maintenance item		Measure value of voltage between connector (GE96A) terminal No. 11 (+) and 13 (–).
	Inspection condition		• Measure from back side of connector of harness with each device connected to harness. • Starter switch: ON
	Requirements		5 V
	Inspection result (Is the judging standard satisfied?)	YES	Go to step 5.
		NO	Go to step 6.

Step 5	Inspection items		Inspection by electronic control unit connector (ground)
	Maintenance item		Measure value of voltage between connector (GE96A) terminal No. 13 (+) and (GE58A) terminal No. 53 (–).
	Inspection condition		• Measure from back side of connector of harness with each device connected to harness. • Starter switch: ON
	Requirements		0 V
	Inspection result (Is the judging standard satisfied?)	YES	Go to step 7.
		NO	Go to step 6.

Step 6	Inspection items		Inspection of electronic control unit connector
	Maintenance item		Inspection of connector
	Inspection condition		–
	Requirements		• Connector is properly connected. • No trace of water entry is found. • No corrosion is found in terminal. • Connection to terminal is appropriate.
	Inspection result (Is the judging standard satisfied?)	YES	Go to step 12.
		NO	Modify connector.

Step 7	Inspection items		Inspection of sensor connector
	Maintenance item		Inspection of connector
	Inspection condition		–
	Requirements		• Connector is properly connected. • No trace of water entry is found. • No corrosion is found in terminal. • Connection to terminal is appropriate.
	Inspection result (Is the judging standard satisfied?)	YES	Go to step 8.
		NO	Modify connector.

Step 8	Inspection items		Inspection of harness between electronic control unit and sensor (power supply)
	Maintenance item		Measure value of voltage between connector terminal No. 3 (+) and 1 (–).
	Inspection condition		• Measure from back side of connector of harness with each device connected to harness. • Starter switch: ON
	Requirements		5 V
	Inspection result (Is the judging standard satisfied?)	YES	Go to step 10.
		NO	Go to step 9.

Step 9	Inspection items		Inspection of harness between electronic control unit and sensor (power supply)
	Maintenance item		Check circuit between sensor connector terminal No. 3 and electronic control unit connector (GE96A) terminal No. 11.
	Inspection condition		Disconnect each device from harness and measure from connection side of harness connector.
	Requirements		There is continuity.
	Inspection result (Is the judging standard satisfied?)	YES	Go to step 12.
		NO	Modify harness.

Step 10	Inspection items		Inspection of harness between electronic control unit and sensor (ground)
	Maintenance item		Check circuit between sensor connector terminal No. 1 and electronic control unit connector (GE96A) terminal No. 13.
	Inspection condition		Disconnect each device from harness and measure from connection side of harness connector.
	Requirements		There is continuity.
	Inspection result (Is the judging standard satisfied?)	YES	Go to step 11.
		NO	Modify harness.

Step 11	Inspection items		Inspection of harness between electronic control unit and sensor (signal)
	Maintenance item		Check circuit between sensor connector terminal No. 2 and electronic control unit connector (GE96A) terminal No. 38.
	Inspection condition		Disconnect each device from harness and measure from connection side of harness connector.
	Requirements		There is continuity.
	Inspection result (Is the judging standard satisfied?)	YES	After replacement of sensor, go to step 12
		NO	Modify harness.

Step 12	Inspection items		Inspection by control data
	Maintenance item		Measure item No. 1B “Actual Common Rail Pressure 2” of Service Data.
	Inspection condition		Starter switch: ON
	Requirements		0%
	Inspection result (Is the judging standard satisfied?)	YES	Go to step 13.
		NO	Replacement of rail

Step 13	Inspection items		Checking of engine appearance
	Maintenance item		Check fuel system for fuel leak.
	Inspection condition		Starter switch: OFF
	Requirements		There is no fuel leak.
	Inspection result (Is the judging standard satisfied?)	YES	Go to step 14.
		NO	Go to step 17.

Step 14	Inspection items		Inspection of low pressure piping (fuel tank – supply pump)
	Maintenance item		Check suction pipe or hose for bend.
	Inspection condition		Starter switch: OFF
	Requirements		There is no bend on pipe or hose.
	Inspection result (Is the judging standard satisfied?)	YES	Go to step 15.
		NO	Correct and replace suction pipe or hose.

Step 15	Inspection items		Checking of air bleeding
	Maintenance item		Bleed air from fuel filter.
	Inspection condition		Starter switch: OFF
	Requirements		Problem is solved by bleeding air.
	Inspection result (Is the judging standard satisfied?)	YES	–
		NO	Go to step 16.

Step 16	Inspection items		Inspection of low pressure piping
	Maintenance item		Fuel filter
	Inspection condition		Starter switch: OFF
	Requirements		Problem is solved by replacing fuel filter.
	Inspection result (Is the judging standard satisfied?)	YES	–
		NO	Go to step 17.

Step 17	Inspection items		Checking of supply pump
	Maintenance item		Check supply pump for fuel leak.
	Inspection condition		Engine start: At idle
	Requirements		There is no leak from supply pump.
	Inspection result (Is the judging standard satisfied?)	YES	Go to step 18.
		NO	Replacement of supply pump

Step 18	Inspection items		Checking of fuel pipe between supply pump and rail
	Maintenance item		Check fuel pipe between supply pump and rail for fuel leak.
	Inspection condition		Engine start: At idle
	Requirements		There is no leak from fuel pipe between supply pump and rail.
	Inspection result (Is the judging standard satisfied?)	YES	Go to step 19.
		NO	Replacement of fuel pipe

Step 19	Inspection items		Checking of rail
	Maintenance item		Check rail for fuel leak.
	Inspection condition		Engine start: At idle
	Requirements		There is no leak from rail.
	Inspection result (Is the judging standard satisfied?)	YES	Go to step 20.
		NO	Replacement of rail

Step 20	Inspection items		Checking of injection pipes (four) between injector and rail
	Maintenance item		Check injection pipes (four) between injector and rail for fuel leak.
	Inspection condition		Engine start: At idle
	Requirements		There is no leak from fuel injection pipes (four) between injector and rail.
	Inspection result (Is the judging standard satisfied?)	YES	Go to step 21.
		NO	Replacement of injection pipe

Step 21	Inspection items		Checking of injectors (four)
	Maintenance item		Check injectors (four) for fuel leak.
	Inspection condition		Engine start: At idle
	Requirements		There is no leak from injectors (four).
	Inspection result (Is the judging standard satisfied?)	YES	Go to step 22.
		NO	Replacement of injector

Step 22	Inspection items		Check inside of combustion chamber.
	Maintenance item		Check for fuel leak.
	Inspection condition		• After performing actuator test item No. B2 “Fuel Leak Check”, stop engine. • Remove glow plug, and check from glow plug mounting hole using bore scope.
	Requirements		Inside of combustion chamber is not wet.
	Inspection result (Is the judging standard satisfied?)	YES	Go to step 23.
		NO	Replacement of injector of object cylinder

Step 23	Inspection items		Replacement of rail (common rail pressure sensor, flow damper and pressure limiter abnormal)
	Maintenance item		–
	Inspection condition		–
	Requirements		Problem is solved by replacing rail.
	Inspection result (Is the judging standard satisfied?)	YES	–
		NO	Go to step 24.

Step 24	Inspection items		Replacement of supply pump
	Maintenance item		–
	Inspection condition		–
	Requirements		Problem is solved by replacing supply pump.
	Inspection result (Is the judging standard satisfied?)	YES	–
		NO	Replacement of injectors (four)

[Fault code]
Diagnosis code: P0192/Flash code: 11
[Monitor]
Failure of common rail pressure sensor
[Fault (outline)]
Low signal range check
[Diagnosis check]
- Common rail pressure sensor output voltage after engine start is monitored.

[Code generation condition]
- Value of voltage from common rail pressure sensor remains below 0.2 V for 0.25 seconds. (common rail pressure: below –150 bar)
  (Diagnosis code is displayed on first establishment of code generation condition.)

[Diagnosis check timing]
- Fault diagnosis is continuously performed during the driving cycle.

[Diagnostic requirement]
–

[Control effected by electronic control unit during fault]
- Engine torque is limited.
- Common rail pressure control is switched to open loop control mode.
- Exhaust gas recirculation control is stopped.
- Throttle controls disabled
- Misfire detection is stopped.
- Auto cruise control stopped
- Traction control is stopped <Automatic transmission>
- Diesel particulate filter regeneration is stopped.
- Injector actuator test is inhibited.
- Turbocharger actuator test is inhibited.
- Related fault check is stopped.

[Probable cause of trouble]
- Open-circuit or short-circuit of harness between electronic control unit and sensor
- Malfunction of each connector
- Malfunction of sensor
- Malfunction of electronic control unit

[Recoverability]
- Recovered if signal becomes normal when starter switch is turned OFF to ON (power supply resumed to electronic control unit).
  (Warning lamp is extinguished and diagnosis code is cleared at fourth display of diagnosis code after recovery.)

[Electronic Control Unit Connection Diagram]

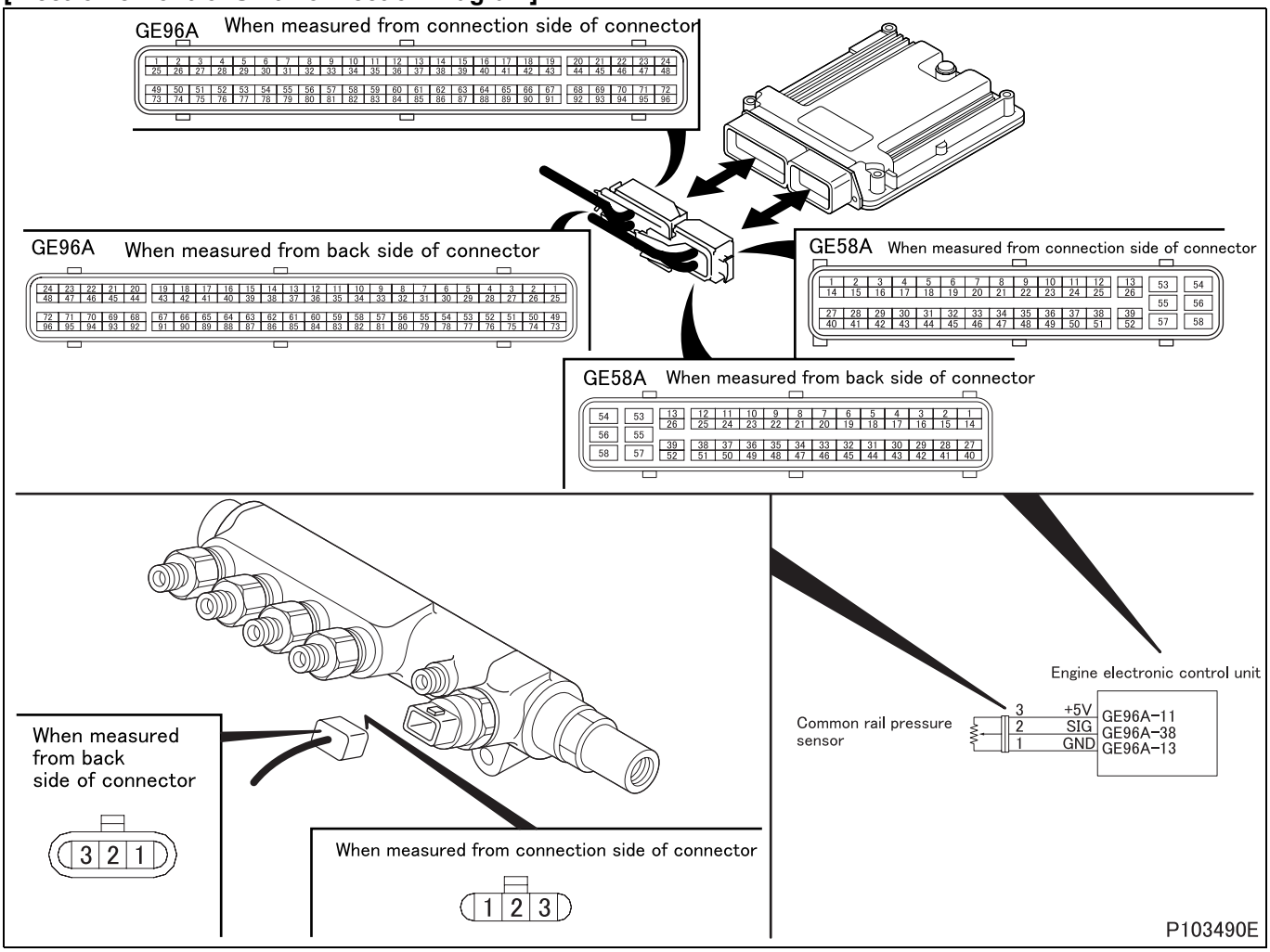

[Parts Identification and Location]

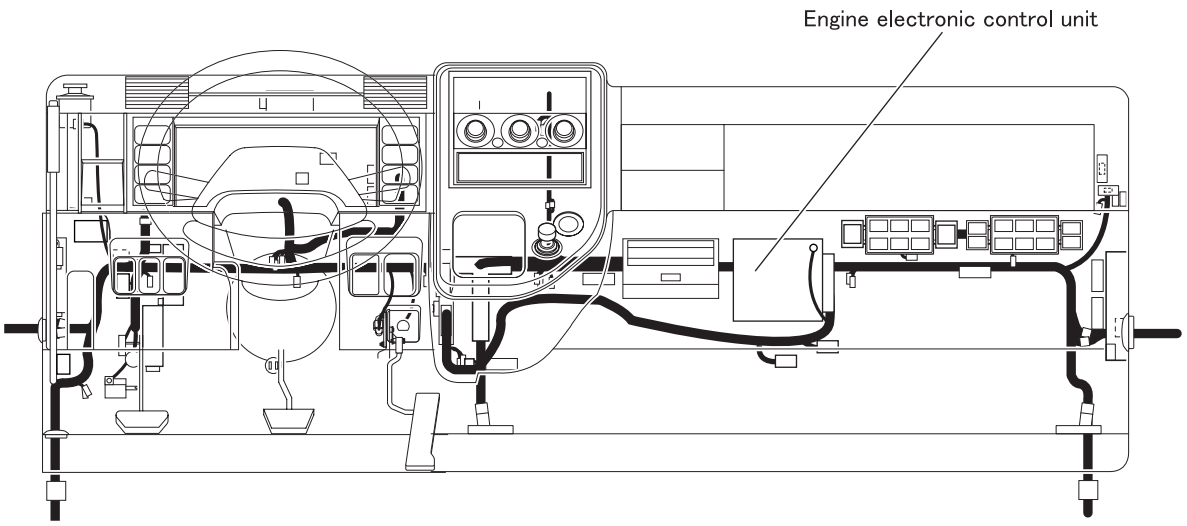

Left side view of engine

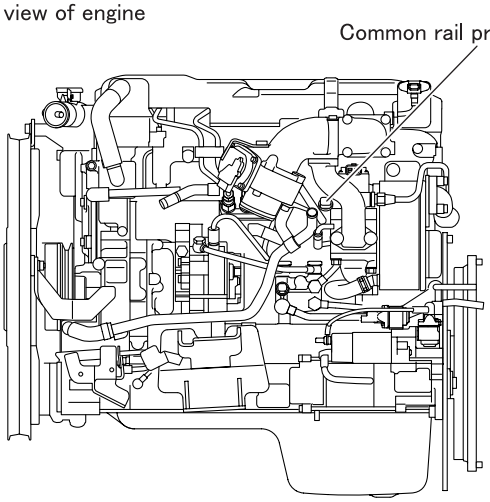

P103618E

[Fault diagnosis]

- Perform checks in the sequence of the following steps.

Step 1	Inspection items		Inspection by control data
	Maintenance item		Measure item No. 0A “Reference Injection Quantity” of Service Data.
	Inspection condition		Starter switch: ON
	Requirements		0%
	Inspection result (Is the judging standard satisfied?)	YES	Go to transient fault (See Gr00.).
		NO	Go to step 2.

Step 2	Inspection items		Inspection by electronic control unit connector (signal)
	Maintenance item		Measure value of voltage between connector (GE96A) terminal No. 38 (+) and 13 (–).
	Inspection condition		• Measure from back side of connector of harness with each device connected to harness. • Starter switch: ON
	Requirements		0.5 to 4.5 V
	Inspection result (Is the judging standard satisfied?)	YES	Go to step 5.
		NO	Go to step 3.

Step 3	Inspection items		Inspection by electronic control unit connector (power supply)
	Maintenance item		Measure value of voltage between connector (GE96A) terminal No. 11 (+) and 13 (–).
	Inspection condition		• Measure from back side of connector of harness with each device connected to harness. • Starter switch: ON
	Requirements		5 V
	Inspection result (Is the judging standard satisfied?)	YES	Go to step 4.
		NO	Go to step 5.

Step 4	Inspection items		Inspection by electronic control unit connector (ground)
	Maintenance item		Measure value of voltage between connector (GE96A) terminal No. 13 (+) and (GE58A) terminal No. 53 (–).
	Inspection condition		• Measure from back side of connector of harness with each device connected to harness. • Starter switch: ON
	Requirements		0 V
	Inspection result (Is the judging standard satisfied?)	YES	Go to step 6.
		NO	Go to step 5.

Step 5	Inspection items		Inspection of electronic control unit connector
	Maintenance item		Inspection of connector
	Inspection condition		–
	Requirements		• Connector is properly connected. • No trace of water entry is found. • No corrosion is found in terminal. • Connection to terminal is appropriate.
	Inspection result (Is the judging standard satisfied?)	YES	Go to step 11.
		NO	Modify connector.

Step 6	Inspection items		Inspection of sensor connector
	Maintenance item		Inspection of connector
	Inspection condition		–
	Requirements		• Connector is properly connected. • No trace of water entry is found. • No corrosion is found in terminal. • Connection to terminal is appropriate.
	Inspection result (Is the judging standard satisfied?)	YES	Go to step 7.
		NO	Modify connector.

Step 7	Inspection items		Inspection of harness between electronic control unit and sensor (power supply)
	Maintenance item		Measure value of voltage between connector terminal No. 3 (+) and 1 (–).
	Inspection condition		• Measure from back side of connector of harness with each device connected to harness. • Starter switch: ON
	Requirements		5 V
	Inspection result (Is the judging standard satisfied?)	YES	Go to step 9.
		NO	Go to step 8.

Step 8	Inspection items		Inspection of harness between electronic control unit and sensor (power supply)
	Maintenance item		Check circuit between sensor connector terminal No. 3 and electronic control unit connector (GE96A) terminal No. 11.
	Inspection condition		Disconnect each device from harness and measure from connection side of harness connector.
	Requirements		There is continuity.
	Inspection result (Is the judging standard satisfied?)	YES	Go to step 11.
		NO	Modify harness.

Step 9	Inspection items		Inspection of harness between electronic control unit and sensor (ground)
	Maintenance item		Check circuit between sensor connector terminal No. 1 and electronic control unit connector (GE96A) terminal No. 13.
	Inspection condition		Disconnect each device from harness and measure from connection side of harness connector.
	Requirements		There is continuity.
	Inspection result (Is the judging standard satisfied?)	YES	Go to step 10.
		NO	Modify harness.

Step 10	Inspection items		Inspection of harness between electronic control unit and sensor (signal)
	Maintenance item		Check circuit between sensor connector terminal No. 2 and electronic control unit connector (GE96A) terminal No. 38.
	Inspection condition		Disconnect each device from harness and measure from connection side of harness connector.
	Requirements		There is continuity.
	Inspection result (Is the judging standard satisfied?)	YES	After replacement of sensor, go to step 11
		NO	Modify harness.

Step 11	Inspection items		Inspection by control data
	Maintenance item		Measure item No. 0A “Reference Injection Quantity” of Service Data.
	Inspection condition		Starter switch: ON
	Requirements		0%
	Inspection result (Is the judging standard satisfied?)	YES	Go to transient fault (See Gr00.).
		NO	Replacement of electronic control unit

[Fault code]
Diagnosis code: P0193/Flash code: 11
[Monitor]
Failure of common rail pressure sensor
[Fault (outline)]
High signal range check
[Diagnosis check]
- Common rail pressure sensor output voltage after engine start is monitored.

[Code generation condition]
- Value of voltage from common rail pressure sensor remains above 4.8 V for 0.25 seconds. (common rail pressure: above 2300 bar)
  (Diagnosis code is displayed on first establishment of code generation condition.)

[Diagnosis check timing]
- Fault diagnosis is continuously performed during the driving cycle.

[Diagnostic requirement]
–

[Control effected by electronic control unit during fault]
- Engine torque is limited.
- Common rail pressure control is switched to open loop control mode.
- Exhaust gas recirculation control is stopped.
- Throttle controls disabled
- Misfire detection is stopped.
- Auto cruise control stopped
- Traction control is stopped <Automatic transmission>
- Diesel particulate filter regeneration is stopped.
- Injector actuator test is inhibited.
- Turbocharger actuator test is inhibited.
- Related fault check is stopped.

[Probable cause of trouble]
- Open-circuit or short-circuit of harness between electronic control unit and sensor
- Malfunction of each connector
- Malfunction of sensor
- Malfunction of electronic control unit

[Recoverability]
- Recovered if signal becomes normal when starter switch is turned OFF to ON (power supply resumed to electronic control unit).
  (Warning lamp is extinguished and diagnosis code is cleared at fourth display of diagnosis code after recovery.)

[Electronic Control Unit Connection Diagram]

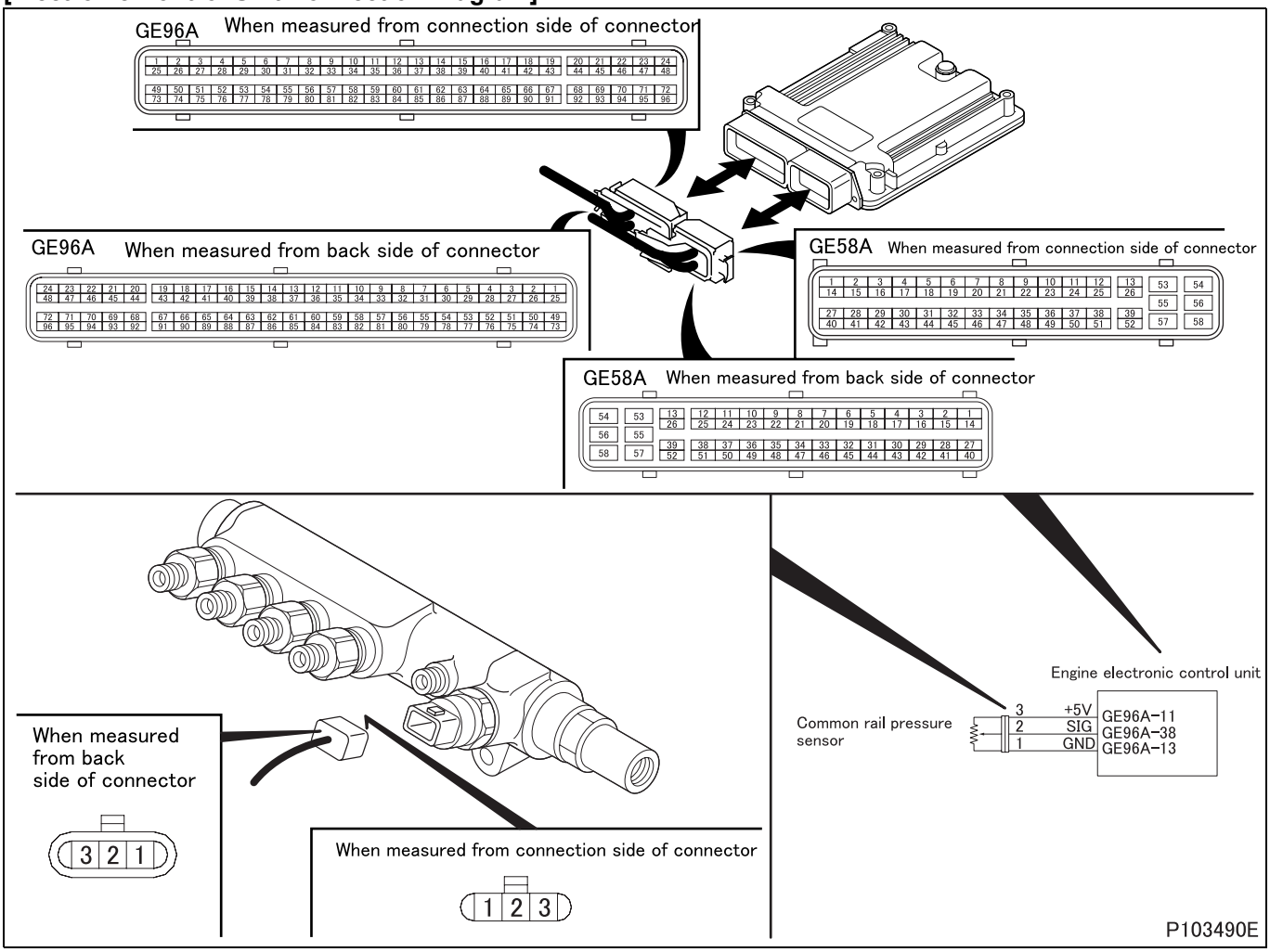

[Parts Identification and Location]

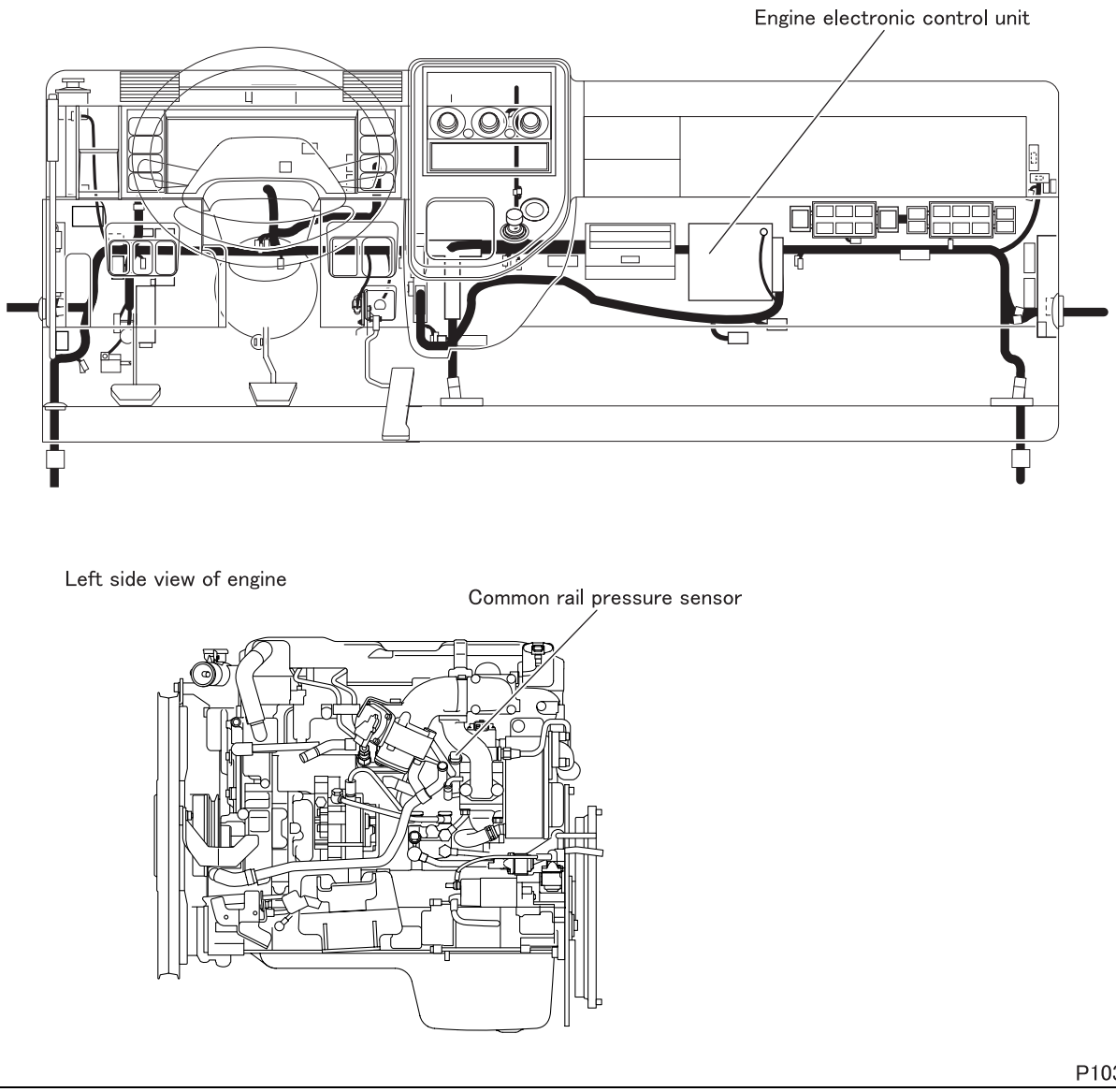

[Fault diagnosis]

- Perform checks in the sequence of the following steps.

Step 1	Inspection items		Inspection by control data
	Maintenance item		Measure item No. 0A “Reference Injection Quantity” of Service Data.
	Inspection condition		Starter switch: ON
	Requirements		0%
	Inspection result (Is the judging standard satisfied?)	YES	Go to transient fault (See Gr00.).
		NO	Go to step 2.

Step 2	Inspection items		Inspection by electronic control unit connector (signal)
	Maintenance item		Measure value of voltage between connector (GE96A) terminal No. 38 (+) and 13 (–).
	Inspection condition		• Measure from back side of connector of harness with each device connected to harness. • Starter switch: ON
	Requirements		0.5 to 4.5 V
	Inspection result (Is the judging standard satisfied?)	YES	Go to step 5.
		NO	Go to step 3.

Step 3	Inspection items		Inspection by electronic control unit connector (power supply)
	Maintenance item		Measure value of voltage between connector (GE96A) terminal No. 11 (+) and 13 (–).
	Inspection condition		• Measure from back side of connector of harness with each device connected to harness. • Starter switch: ON
	Requirements		5 V
	Inspection result (Is the judging standard satisfied?)	YES	Go to step 4.
		NO	Go to step 5.

Step 4	Inspection items		Inspection by electronic control unit connector (ground)
	Maintenance item		Measure value of voltage between connector (GE96A) terminal No. 13 (+) and (GE58A) terminal No. 53 (–).
	Inspection condition		• Measure from back side of connector of harness with each device connected to harness. • Starter switch: ON
	Requirements		0 V
	Inspection result (Is the judging standard satisfied?)	YES	Go to step 6.
		NO	Go to step 5.

Step 5	Inspection items		Inspection of electronic control unit connector
	Maintenance item		Inspection of connector
	Inspection condition		–
	Requirements		• Connector is properly connected. • No trace of water entry is found. • No corrosion is found in terminal. • Connection to terminal is appropriate.
	Inspection result (Is the judging standard satisfied?)	YES	Go to step 11.
		NO	Modify connector.

Step 6	Inspection items		Inspection of sensor connector
	Maintenance item		Inspection of connector
	Inspection condition		–
	Requirements		• Connector is properly connected. • No trace of water entry is found. • No corrosion is found in terminal. • Connection to terminal is appropriate.
	Inspection result (Is the judging standard satisfied?)	YES	Go to step 7.
		NO	Modify connector.

Step 7	Inspection items		Inspection of harness between electronic control unit and sensor (power supply)
	Maintenance item		Measure value of voltage between connector terminal No. 3 (+) and 1 (–).
	Inspection condition		• Measure from back side of connector of harness with each device connected to harness. • Starter switch: ON
	Requirements		5 V
	Inspection result (Is the judging standard satisfied?)	YES	Go to step 9.
		NO	Go to step 8.

Step 8	Inspection items		Inspection of harness between electronic control unit and sensor (power supply)
	Maintenance item		Check circuit between sensor connector terminal No. 3 and electronic control unit connector (GE96A) terminal No. 11.
	Inspection condition		Disconnect each device from harness and measure from connection side of harness connector.
	Requirements		There is continuity.
	Inspection result (Is the judging standard satisfied?)	YES	Go to step 11.
		NO	Modify harness.

Step 9	Inspection items		Inspection of harness between electronic control unit and sensor (ground)
	Maintenance item		Check circuit between sensor connector terminal No. 1 and electronic control unit connector (GE96A) terminal No. 13.
	Inspection condition		Disconnect each device from harness and measure from connection side of harness connector.
	Requirements		There is continuity.
	Inspection result (Is the judging standard satisfied?)	YES	Go to step 10.
		NO	Modify harness.

Step 10	Inspection items		Inspection of harness between electronic control unit and sensor (signal)
	Maintenance item		Check circuit between sensor connector terminal No. 2 and electronic control unit connector (GE96A) terminal No. 38.
	Inspection condition		Disconnect each device from harness and measure from connection side of harness connector.
	Requirements		There is continuity.
	Inspection result (Is the judging standard satisfied?)	YES	After replacement of sensor, go to step 11
		NO	Modify harness.

Step 11	Inspection items		Inspection by control data
	Maintenance item		Measure item No. 0A “Reference Injection Quantity” of Service Data.
	Inspection condition		Starter switch: ON
	Requirements		0%
	Inspection result (Is the judging standard satisfied?)	YES	Go to transient fault (See Gr00.).
		NO	Replacement of electronic control unit

[Fault code]
Diagnosis code: P0201/Flash code: 37
[Monitor]
Failure of injector magnetic valve (No. 1 cylinder)
[Fault (outline)]
Injector open circuit (No. 1 cylinder)
[Diagnosis check]
- Injector magnetic valve (No. 1 cylinder) circuit is monitored for fault.

[Code generation condition]
- Injector magnetic valve (No. 1 cylinder) circuit remains open as detected for 3 cycles.
  (Diagnosis code is displayed on first establishment of code generation condition.)

[Diagnosis check timing]
- Fault diagnosis is continuously performed during the driving cycle.

[Diagnostic requirement]
–

[Control effected by electronic control unit during fault]
Electronic control unit differs in the way of control by the diagnosis check item.
<Short-circuit>
- Injector magnetic valve (No. 1 and No. 4 cylinder) is stopped.
- Exhaust gas recirculation control is stopped.
- Throttle controls disabled
- Misfire detection is stopped.
- Auto cruise control stopped
- Diesel particulate filter regeneration is stopped.
- Turbocharger actuator test is inhibited.
- Controller area network torque output is fixed at backup valve.
- Related fault check is stopped.

<Open-circuit>
- Injector magnetic valve (No. 1 cylinder) is stopped.
- Exhaust gas recirculation control is stopped.
- Throttle controls disabled
- Misfire detection is stopped.
- Auto cruise control stopped
- Diesel particulate filter regeneration is stopped.
- Turbocharger actuator test is inhibited.
- Related fault check is stopped.

[Probable cause of trouble]
- Open-circuit or short-circuit of harness between electronic control unit and injector magnetic valve
- Malfunction of each connector
- Malfunction of injector magnetic valve
- Malfunction of electronic control unit

[Recoverability]
- Short-circuit: System recovers if any valid signal is input when starter switch is turned from OFF to ON (power on again of electronic control unit).
  (Warning lamp is extinguished and diagnosis code is cleared at fourth display of diagnosis code after recovery.)
- Open-circuit: System recovers if any valid signal is input with starter switch in ON position.
  (Warning lamp is extinguished and diagnosis code is cleared at fourth display of diagnosis code after recovery.)

[Electronic Control Unit Connection Diagram]

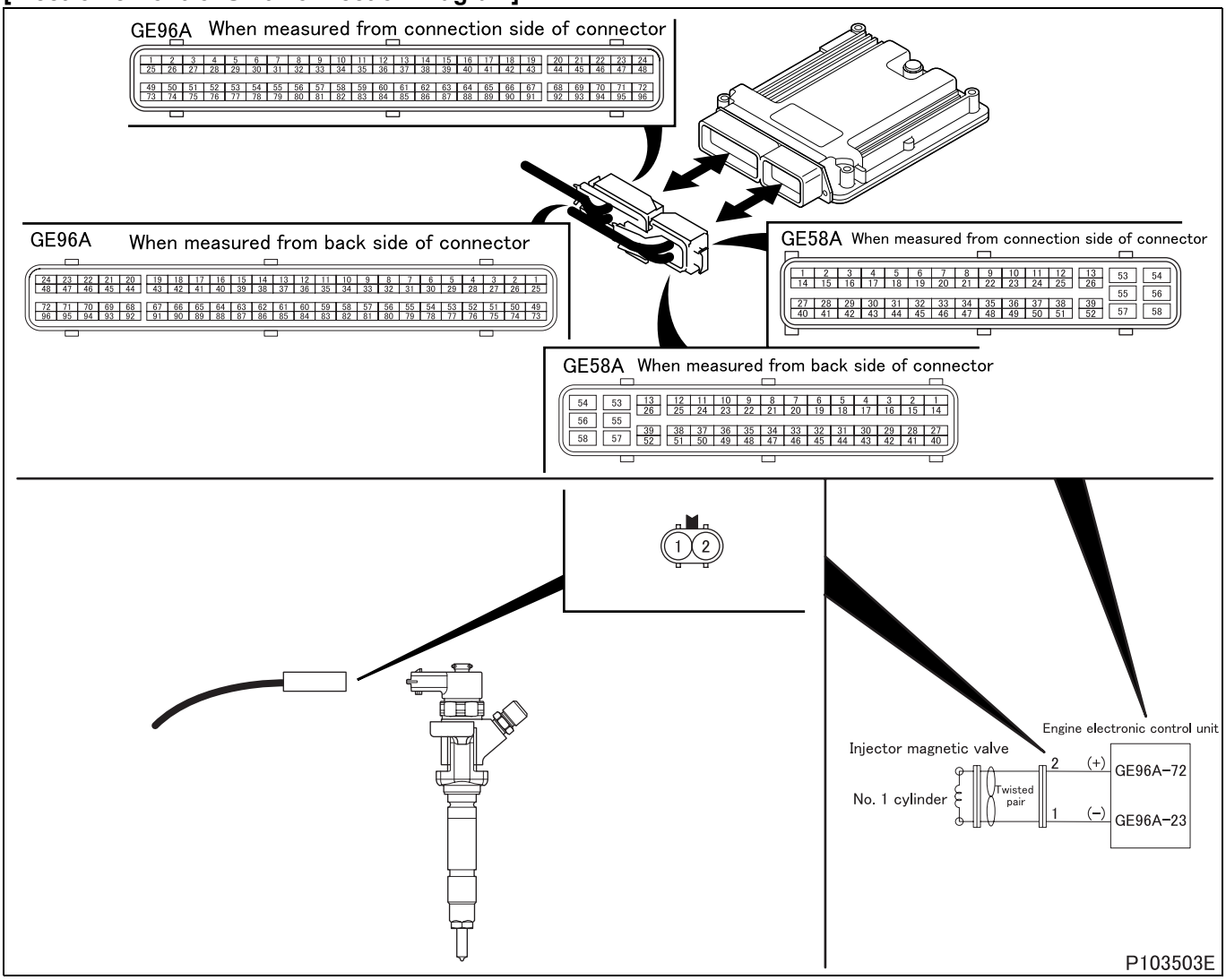

[Parts Identification and Location]

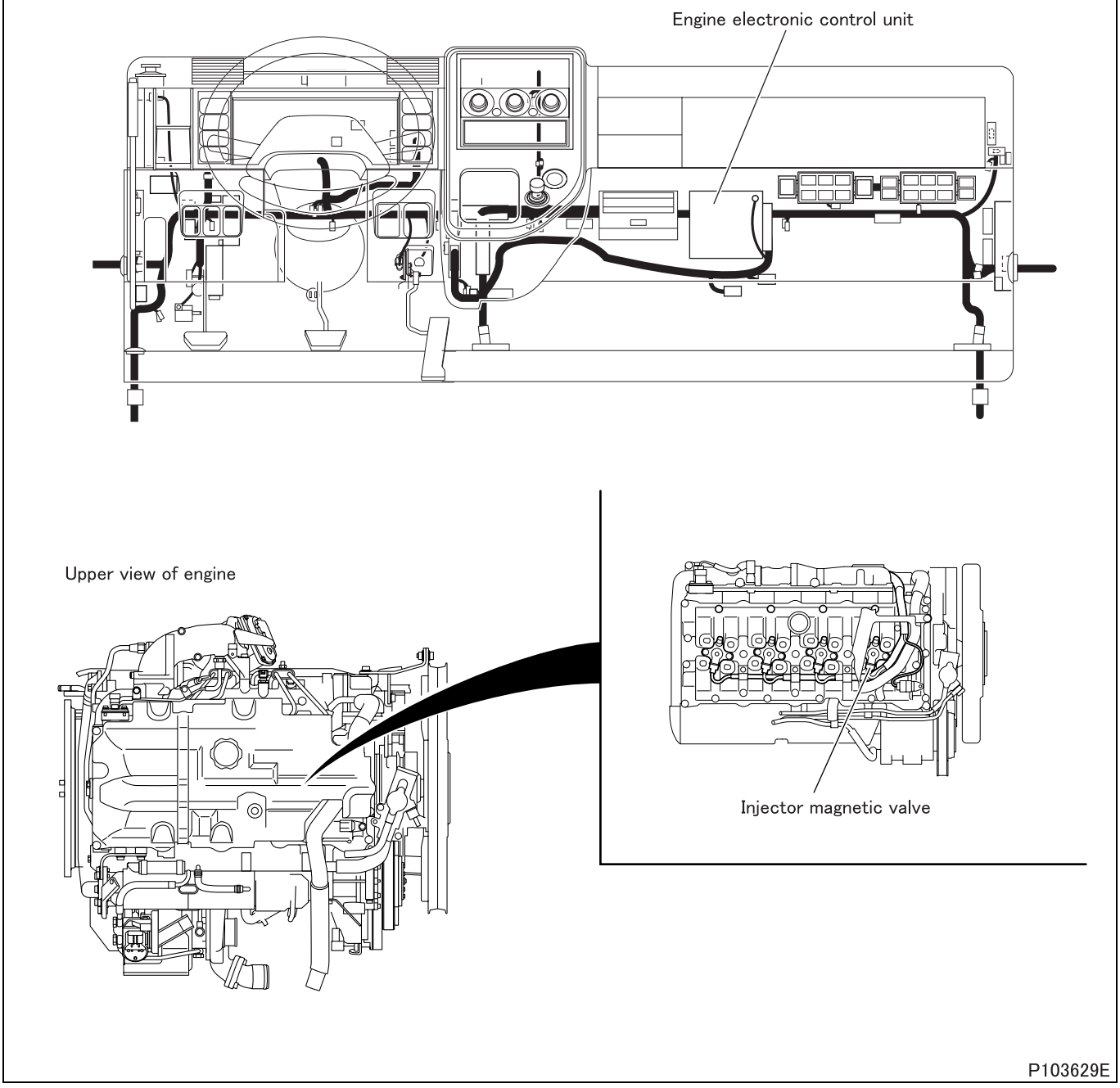

[Fault diagnosis]

- Perform checks in the sequence of the following steps.

Step 1	Inspection items		Inspection by control data
	Maintenance item		Perform actuator test item No. BB “Injector Test 1”.
	Inspection condition		• Vehicle: stationary (vehicle speed 0 km/h {0 MPH}) • Engine speed: 1500 rpm or less • Transmission: neutral • The current diagnosis code does not occur.
	Requirements		Injector (No. 1 cylinder) stops injection and engine vibrations become slightly larger.
	Inspection result (Is the judging standard satisfied?)	YES	Go to transient fault (See Gr00.).
		NO	Go to step 2.

Step 2	Inspection items		Inspection by electronic control unit connector
	Maintenance item		Measure value of resistance between connector (GE96A) terminal No. 23 and 72.
	Inspection condition		Disconnect electronic control unit from harness and measure from connection side of harness connector.
	Requirements		0.255 ± 0.04 Ω (20°C {68°F})
	Inspection result (Is the judging standard satisfied?)	YES	Go to step 3.
		NO	Go to step 4.

Step 3	Inspection items		Inspection of electronic control unit connector
	Maintenance item		Inspection of connector
	Inspection condition		–
	Requirements		• Connector is properly connected. • No trace of water entry is found. • No corrosion is found in terminal. • Connection to terminal is appropriate.
	Inspection result (Is the judging standard satisfied?)	YES	Go to step 8.
		NO	Modify connector.

Step 4	Inspection items		Inspection of injector magnetic valve connector
	Maintenance item		Inspection of connector
	Inspection condition		–
	Requirements		• Connector is properly connected. • Connection to terminal is appropriate.
	Inspection result (Is the judging standard satisfied?)	YES	Go to step 5.
		NO	Modify connector.

Step 5	Inspection items		Inspection of injector magnetic valve unit
	Maintenance item		Measure value of resistance between connector terminal No. 1 and 2.
	Inspection condition		–
	Requirements		0.255 ± 0.04 Ω (20°C {68°F})
	Inspection result (Is the judging standard satisfied?)	YES	Go to step 6.
		NO	Replacement of injector

<Step 5 inspection diagram>

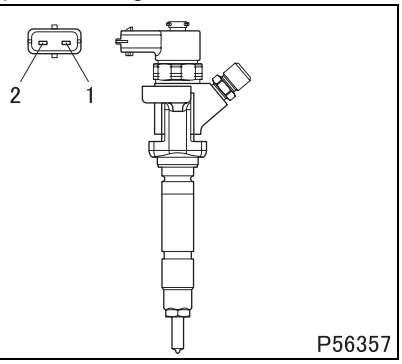

Step 6	Inspection items		Inspection of harness between injector magnetic valve and electronic control unit (power supply)
	Maintenance item		Check circuit between injector magnetic valve connector terminal No. 2 and electronic control unit connector (GE96A) terminal No. 72.
	Inspection condition		Disconnect electronic control unit from harness and measure from connection side of harness connector.
	Requirements		There is continuity.
	Inspection result (Is the judging standard satisfied?)	YES	Go to step 7.
		NO	Modify harness.

Step 7	Inspection items		Inspection of harness between injector magnetic valve and electronic control unit (ground)
	Maintenance item		Check circuit between injector magnetic valve connector terminal No. 1 and electronic control unit connector (GE96A) terminal No. 23.
	Inspection condition		Disconnect electronic control unit from harness and measure from connection side of harness connector.
	Requirements		There is continuity.
	Inspection result (Is the judging standard satisfied?)	YES	Go to step 8.
		NO	Modify harness.

Step 8	Inspection items		Inspection by control data
	Maintenance item		Perform actuator test item No. BB “Injector Test 1”.
	Inspection condition		• Vehicle: stationary (vehicle speed 0 km/h {0 MPH}) • Engine speed: 1500 rpm or less • Transmission: neutral • The current diagnosis code does not occur.
	Requirements		Injector (No. 1 cylinder) stops injection and engine vibrations become slightly larger.
	Inspection result (Is the judging standard satisfied?)	YES	Go to transient fault (See Gr00.).
		NO	Replacement of electronic control unit

[Fault code]
Diagnosis code: P0202/Flash code: 8
[Monitor]
Failure of injector magnetic valve (No. 2 cylinder)
[Fault (outline)]
Injector open circuit (No. 2 cylinder)
[Diagnosis check]
- Injector magnetic valve (No. 2 cylinder) circuit is monitored for fault.

[Code generation condition]
- Injector magnetic valve (No. 2 cylinder) circuit remains open as detected for 3 cycles.
  (Diagnosis code is displayed on first establishment of code generation condition.)

[Diagnosis check timing]
- Fault diagnosis is continuously performed during the driving cycle.

[Diagnostic requirement]
–

[Control effected by electronic control unit during fault]
Electronic control unit differs in the way of control by the diagnosis check item.
<Short-circuit>
- Injector magnetic valve (No. 2 and No. 3 cylinder) is stopped.
- Exhaust gas recirculation control is stopped.
- Throttle controls disabled
- Misfire detection is stopped.
- Auto cruise control stopped
- Diesel particulate filter regeneration is stopped.
- Turbocharger actuator test is inhibited.
- Related fault check is stopped.

<Open-circuit>
- Injector magnetic valve (No. 2 cylinder) is stopped.
- Exhaust gas recirculation control is stopped.
- Throttle controls disabled
- Misfire detection is stopped.
- Auto cruise control stopped
- Diesel particulate filter regeneration is stopped.
- Turbocharger actuator test is inhibited.
- Related fault check is stopped.

[Probable cause of trouble]
- Open-circuit or short-circuit of harness between electronic control unit and injector magnetic valve
- Malfunction of each connector
- Malfunction of injector magnetic valve
- Malfunction of electronic control unit

[Recoverability]
- Short-circuit: System recovers if any valid signal is input when starter switch is turned from OFF to ON (power on again of electronic control unit).
  (Warning lamp is extinguished and diagnosis code is cleared at fourth display of diagnosis code after recovery.)
- Open-circuit: System recovers if any valid signal is input with starter switch in ON position.
  (Warning lamp is extinguished and diagnosis code is cleared at fourth display of diagnosis code after recovery.)

[Electronic Control Unit Connection Diagram]

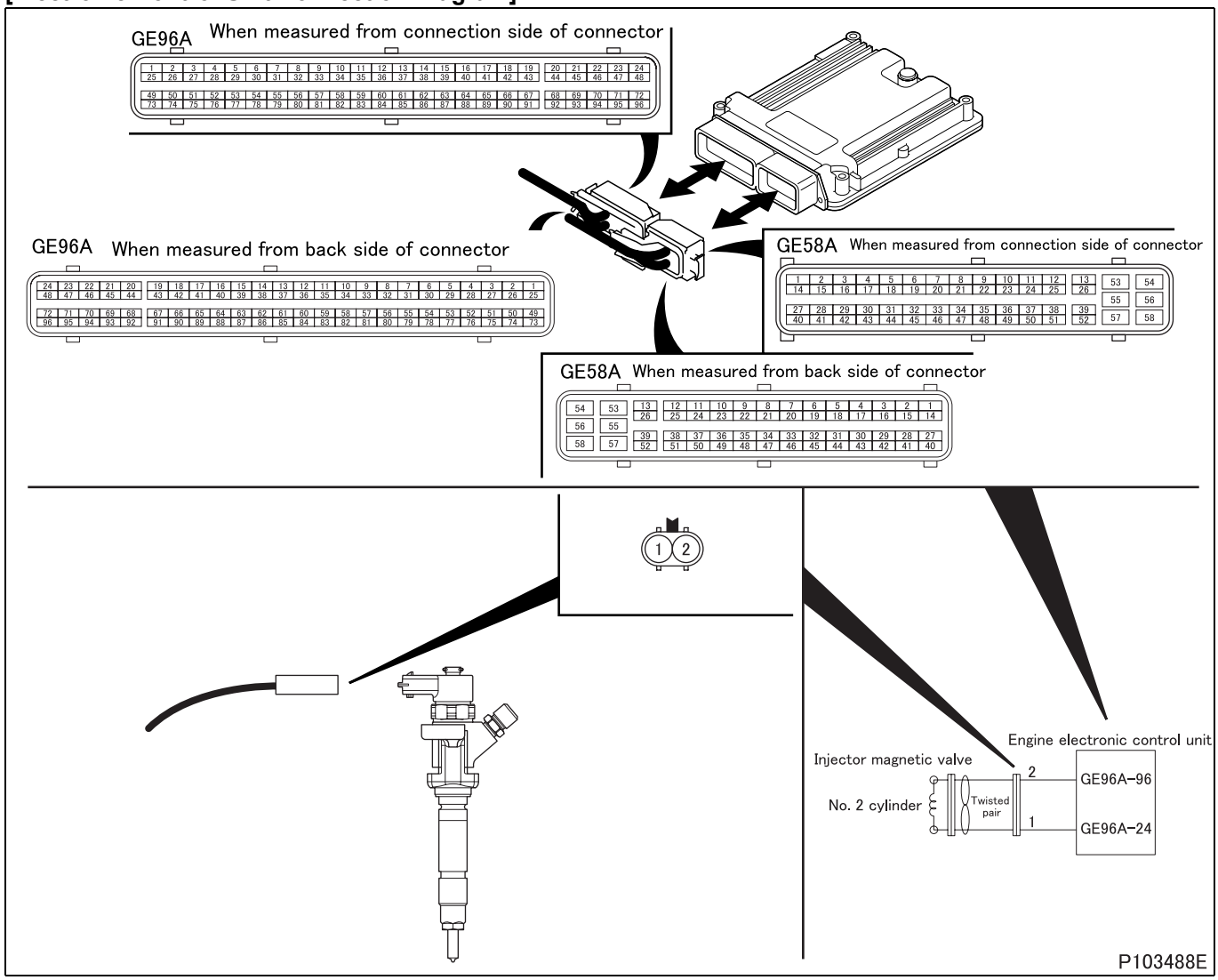

[Parts Identification and Location]

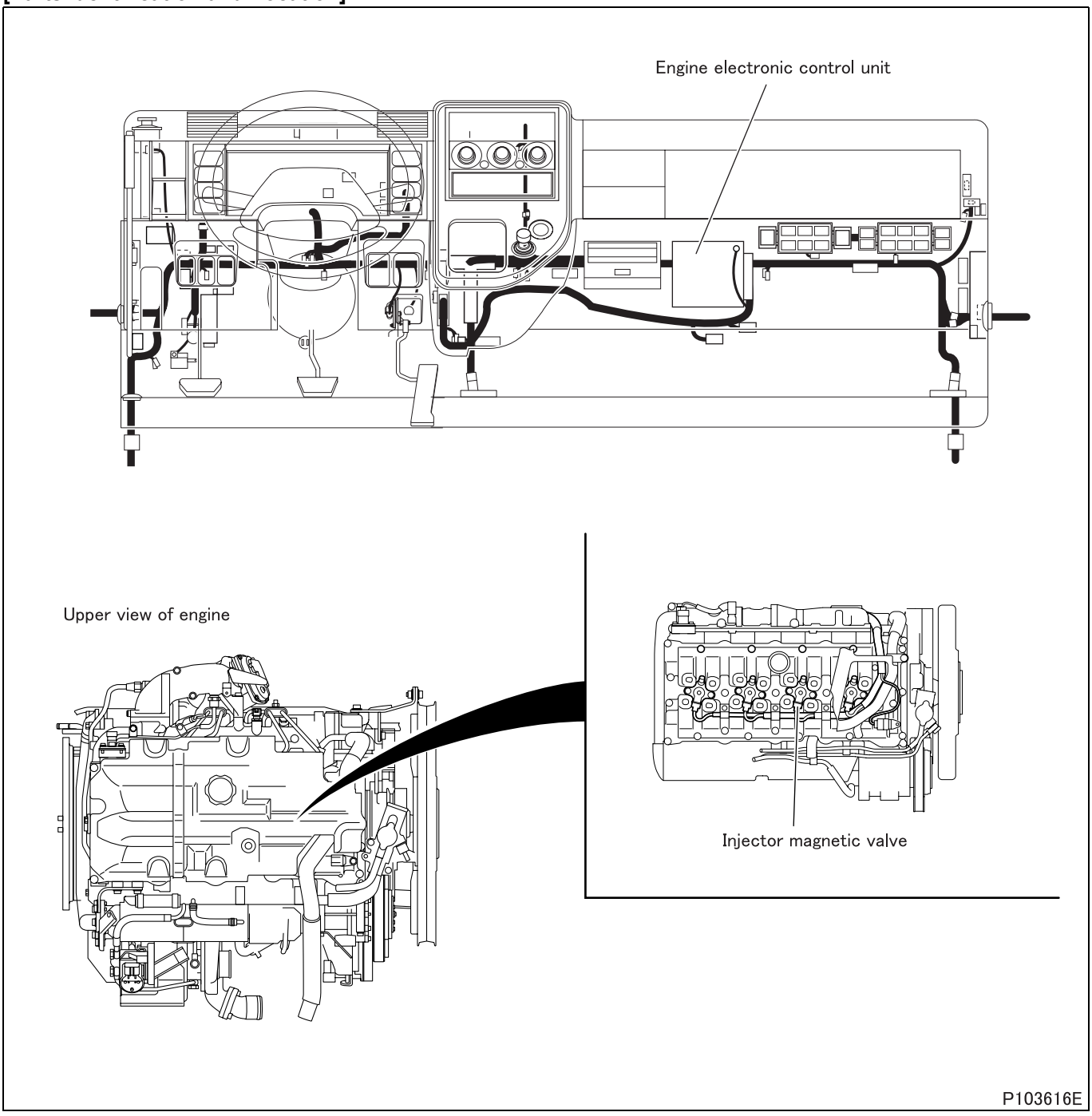

[Fault diagnosis]

- Perform checks in the sequence of the following steps.

Step 1	Inspection items		Inspection by control data
	Maintenance item		Perform actuator test item No. BD “Injector Test 3”.
	Inspection condition		• Vehicle: stationary (vehicle speed 0 km/h {0 MPH}) • Engine speed: 1500 rpm or less • Transmission: neutral • The current diagnosis code does not occur.
	Requirements		Injector (No. 2 cylinder) stops injection and engine vibrations become slightly larger.
	Inspection result (Is the judging standard satisfied?)	YES	Go to transient fault (See Gr00.).
		NO	Go to step 2.

Step 2	Inspection items		Inspection by electronic control unit connector
	Maintenance item		Measure value of resistance between connector (GE96A) terminal No. 24 and 96.
	Inspection condition		Disconnect electronic control unit from harness and measure from connection side of harness connector.
	Requirements		0.255 ± 0.04 Ω (20°C {68°F})
	Inspection result (Is the judging standard satisfied?)	YES	Go to step 3.
		NO	Go to step 4.

Step 3	Inspection items		Inspection of electronic control unit connector
	Maintenance item		Inspection of connector
	Inspection condition		–
	Requirements		• Connector is properly connected. • No trace of water entry is found. • No corrosion is found in terminal. • Connection to terminal is appropriate.
	Inspection result (Is the judging standard satisfied?)	YES	Go to step 8.
		NO	Modify connector.

Step 4	Inspection items		Inspection of injector magnetic valve connector
	Maintenance item		Inspection of connector
	Inspection condition		–
	Requirements		• Connector is properly connected. • Connection to terminal is appropriate.
	Inspection result (Is the judging standard satisfied?)	YES	Go to step 5.
		NO	Modify connector.

Step 5	Inspection items		Inspection of injector magnetic valve unit
	Maintenance item		Measure value of resistance between connector terminal No. 1 and 2.
	Inspection condition		–
	Requirements		0.255 ± 0.04 Ω (20°C {68°F})
	Inspection result (Is the judging standard satisfied?)	YES	Go to step 6.
		NO	Replacement of injector

<Step 5 inspection diagram>

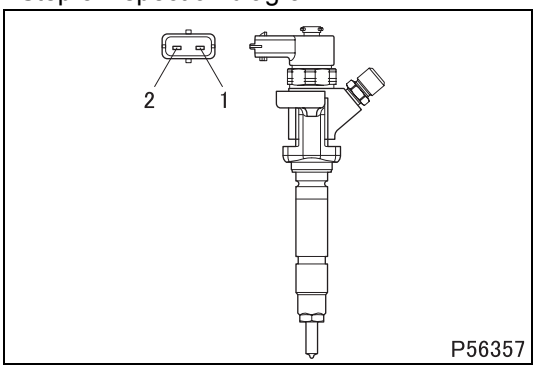

Step 6	Inspection items		Inspection of harness between injector magnetic valve and electronic control unit (power supply)
	Maintenance item		Check circuit between injector magnetic valve connector terminal No. 2 and electronic control unit connector (GE96A) terminal No. 96.
	Inspection condition		Disconnect electronic control unit from harness and measure from connection side of harness connector.
	Requirements		There is continuity.
	Inspection result (Is the judging standard satisfied?)	YES	Go to step 7.
		NO	Modify harness.

Step 7	Inspection items		Inspection of harness between injector magnetic valve and electronic control unit (ground)
	Maintenance item		Check circuit between injector magnetic valve connector terminal No. 1 and electronic control unit connector (GE96A) terminal No. 24.
	Inspection condition		Disconnect electronic control unit from harness and measure from connection side of harness connector.
	Requirements		There is continuity.
	Inspection result (Is the judging standard satisfied?)	YES	Go to step 8.
		NO	Modify harness.

Step 8	Inspection items		Inspection by control data
	Maintenance item		Perform actuator test item No. BD “Injector Test 3”.
	Inspection condition		• Vehicle: stationary (vehicle speed 0 km/h {0 MPH}) • Engine speed: 1500 rpm or less • Transmission: neutral • The current diagnosis code does not occur.
	Requirements		Injector (No. 2 cylinder) stops injection and engine vibrations become slightly larger.
	Inspection result (Is the judging standard satisfied?)	YES	Go to transient fault (See Gr00.).
		NO	Replacement of electronic control unit

[Fault code]
Diagnosis code: P0203/Flash code: 38
[Monitor]
Failure of injector magnetic valve (No. 3 cylinder)
[Fault (outline)]
Injector open circuit (No. 3 cylinder)
[Diagnosis check]
- Injector magnetic valve (No. 3 cylinder) circuit is monitored for fault.

[Code generation condition]
- Injector magnetic valve (No. 3 cylinder) circuit remains open as detected for 3 cycles.
  (Diagnosis code is displayed on first establishment of code generation condition.)

[Diagnosis check timing]
- Fault diagnosis is continuously performed during the driving cycle.

[Diagnostic requirement]
–

[Control effected by electronic control unit during fault]
Electronic control unit differs in the way of control by the diagnosis check item.
<Short-circuit>
- Injector magnetic valve (No. 2 and No. 3 cylinder) is stopped.
- Exhaust gas recirculation control is stopped.
- Throttle controls disabled
- Misfire detection is stopped.
- Auto cruise control stopped
- Diesel particulate filter regeneration is stopped.
- Turbocharger actuator test is inhibited.
- Related fault check is stopped.

<Open-circuit>
- Injector magnetic valve (No. 3 cylinder) is stopped.
- Exhaust gas recirculation control is stopped.
- Throttle controls disabled
- Misfire detection is stopped.
- Auto cruise control stopped
- Diesel particulate filter regeneration is stopped.
- Turbocharger actuator test is inhibited.
- Related fault check is stopped.

[Probable cause of trouble]
- Open-circuit or short-circuit of harness between electronic control unit and injector magnetic valve
- Malfunction of each connector
- Malfunction of injector magnetic valve
- Malfunction of electronic control unit

[Recoverability]
- Short-circuit: System recovers if any valid signal is input when starter switch is turned from OFF to ON (power on again of electronic control unit).
  (Warning lamp is extinguished and diagnosis code is cleared at fourth display of diagnosis code after recovery.)
- Open-circuit: System recovers if any valid signal is input with starter switch in ON position.
  (Warning lamp is extinguished and diagnosis code is cleared at fourth display of diagnosis code after recovery.)

[Electronic Control Unit Connection Diagram]

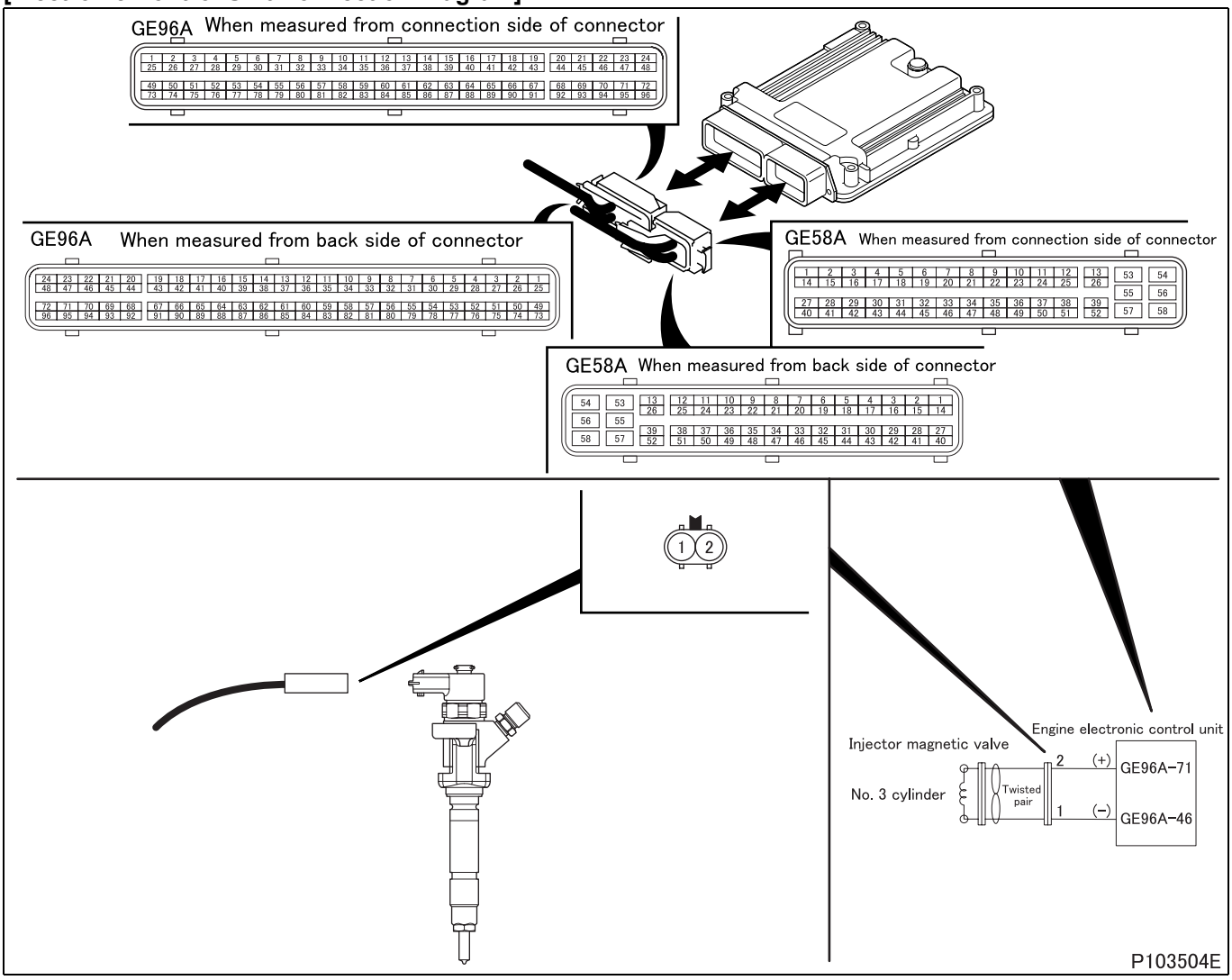

[Parts Identification and Location]

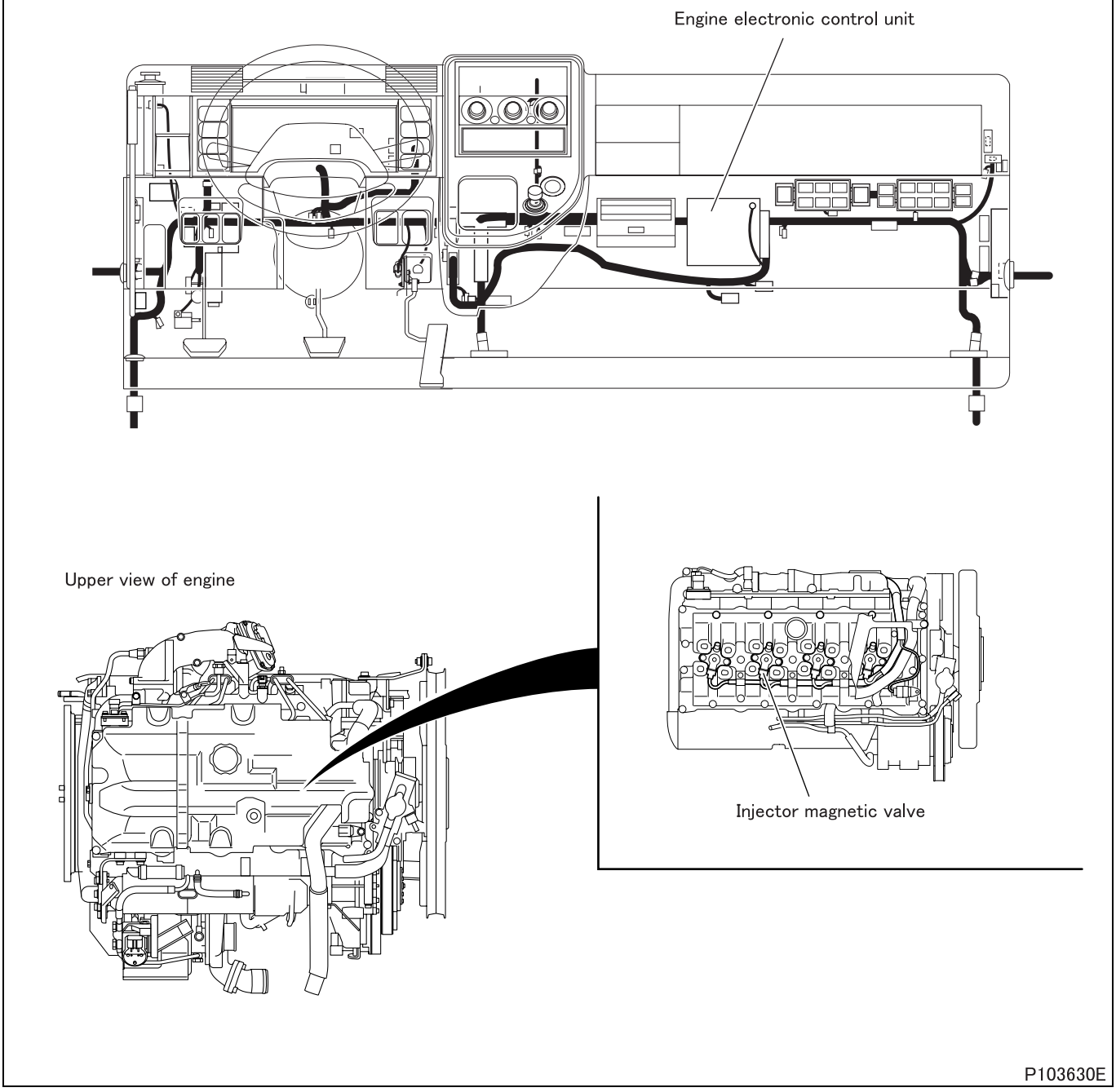

[Fault diagnosis]

- Perform checks in the sequence of the following steps.

Step 1	Inspection items		Inspection by control data
	Maintenance item		Perform actuator test item No. BE “Injector Test 4”.
	Inspection condition		• Vehicle: stationary (vehicle speed 0 km/h) • Engine speed: 1500 rpm or less • Transmission: neutral • The current diagnosis code does not occur.
	Requirements		Injector (No. 3 cylinder) stops injection and engine vibrations become slightly larger.
	Inspection result (Is the judging standard satisfied?)	YES	Go to transient fault (See Gr00.).
		NO	Go to step 2.

Step 2	Inspection items		Inspection by electronic control unit connector
	Maintenance item		Measure value of resistance between connector (GE96A) terminal No. 46 and 71.
	Inspection condition		Disconnect electronic control unit from harness and measure from connection side of harness connector.
	Requirements		0.255 ± 0.04 Ω (20°C {68°F})
	Inspection result (Is the judging standard satisfied?)	YES	Go to step 3.
		NO	Go to step 4.

Step 3	Inspection items		Inspection of electronic control unit connector
	Maintenance item		Inspection of connector
	Inspection condition		–
	Requirements		• Connector is properly connected. • No trace of water entry is found. • No corrosion is found in terminal. • Connection to terminal is appropriate.
	Inspection result (Is the judging standard satisfied?)	YES	Go to step 8.
		NO	Modify connector.

Step 4	Inspection items		Inspection of injector magnetic valve connector
	Maintenance item		Inspection of connector
	Inspection condition		–
	Requirements		• Connector is properly connected. • Connection to terminal is appropriate.
	Inspection result (Is the judging standard satisfied?)	YES	Go to step 5.
		NO	Modify connector.

Step 5	Inspection items		Inspection of injector magnetic valve unit
	Maintenance item		Measure value of resistance between connector terminal No. 1 and 2.
	Inspection condition		–
	Requirements		0.255 ± 0.04 Ω (20°C {68°F})
	Inspection result (Is the judging standard satisfied?)	YES	Go to step 6.
		NO	Replacement of injector

<Step 5 inspection diagram>

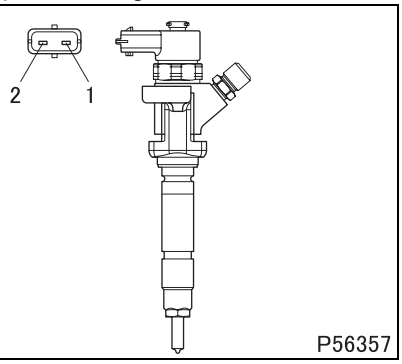

Step 6	Inspection items		Inspection of harness between injector magnetic valve and electronic control unit (power supply)
	Maintenance item		Check circuit between injector magnetic valve connector terminal No. 2 and electronic control unit connector (GE96A) terminal No. 71.
	Inspection condition		Disconnect electronic control unit from harness and measure from connection side of harness connector.
	Requirements		There is continuity.
	Inspection result (Is the judging standard satisfied?)	YES	Go to step 7.
		NO	Modify harness.

Step 7	Inspection items		Inspection of harness between injector magnetic valve and electronic control unit (ground)
	Maintenance item		Check circuit between injector magnetic valve connector terminal No. 1 and electronic control unit connector (GE96A) terminal No. 46.
	Inspection condition		Disconnect electronic control unit from harness and measure from connection side of harness connector.
	Requirements		There is continuity.
	Inspection result (Is the judging standard satisfied?)	YES	Go to step 8.
		NO	Modify harness.

Step 8	Inspection items		Inspection by control data
	Maintenance item		Perform actuator test item No. BE “Injector Test 4”.
	Inspection condition		• Vehicle: stationary (vehicle speed 0 km/h {0 MPH}) • Engine speed: 1500 rpm or less • Transmission: neutral • The current diagnosis code does not occur.
	Requirements		Injector (No. 3 cylinder) stops injection and engine vibrations become slightly larger.
	Inspection result (Is the judging standard satisfied?)	YES	Go to transient fault (See Gr00.).
		NO	Replacement of electronic control unit

[Fault code]
Diagnosis code: P0204/Flash code: 39
[Monitor]
Failure of injector magnetic valve (No. 4 cylinder)
[Fault (outline)]
Injector open circuit (No. 4 cylinder)
[Diagnosis check]
- Injector magnetic valve (No. 4 cylinder) circuit is monitored for fault.

[Code generation condition]
- Injector magnetic valve (No. 4 cylinder) circuit remains open as detected for 3 cycles.
  (Diagnosis code is displayed on first establishment of code generation condition.)

[Diagnosis check timing]
- Fault diagnosis is continuously performed during the driving cycle.

[Diagnostic requirement]
–

[Control effected by electronic control unit during fault]
Electronic control unit differs in the way of control by the diagnosis check item.
<Short-circuit>
- Injector magnetic valve (No. 1 and No. 4 cylinder) is stopped.
- Exhaust gas recirculation control is stopped.
- Throttle controls disabled
- Misfire detection is stopped.
- Auto cruise control stopped
- Diesel particulate filter regeneration is stopped.
- Turbocharger actuator test is inhibited.
- Related fault check is stopped.

<Open-circuit>
- Injector magnetic valve (No. 4 cylinder) is stopped.
- Exhaust gas recirculation control is stopped.
- Throttle controls disabled
- Misfire detection is stopped.
- Auto cruise control stopped
- Diesel particulate filter regeneration is stopped.
- Turbocharger actuator test is inhibited.
- Related fault check is stopped.

[Probable cause of trouble]
- Open-circuit or short-circuit of harness between electronic control unit and injector magnetic valve
- Malfunction of each connector
- Malfunction of injector magnetic valve
- Malfunction of electronic control unit

[Recoverability]
- Short-circuit: System recovers if any valid signal is input when starter switch is turned from OFF to ON (power on again of electronic control unit).
  (Warning lamp is extinguished and diagnosis code is cleared at fourth display of diagnosis code after recovery.)
- Open-circuit: System recovers if any valid signal is input with starter switch in ON position.
  (Warning lamp is extinguished and diagnosis code is cleared at fourth display of diagnosis code after recovery.)

[Electronic Control Unit Connection Diagram]

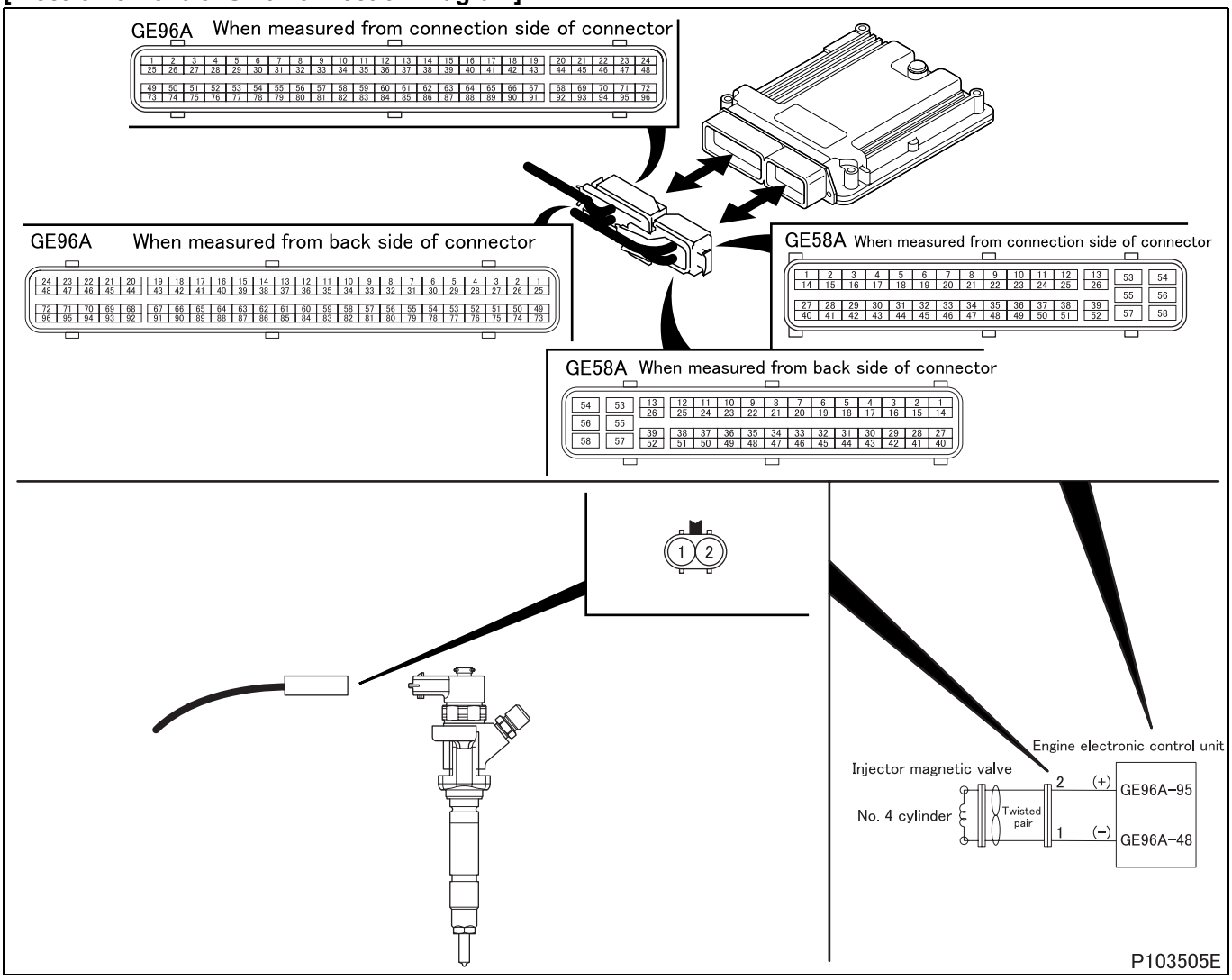

[Parts Identification and Location]

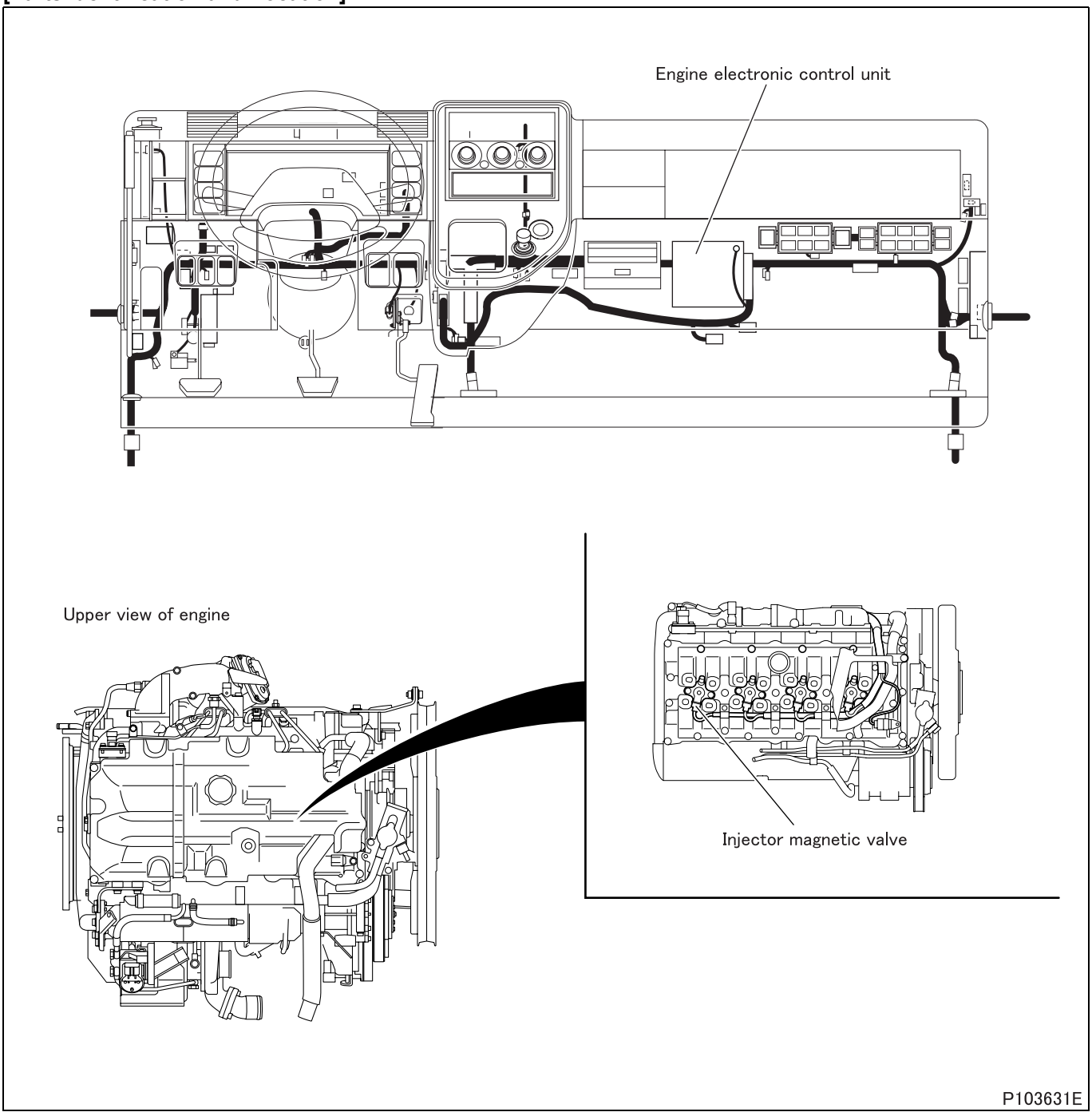

[Fault diagnosis]

- Perform checks in the sequence of the following steps.

Step 1	Inspection items		Inspection by control data
	Maintenance item		• Perform actuator test item No. BC “Injector Test 2”.
	Inspection condition		• Vehicle: stationary (vehicle speed 0 km/h {0 MPH}) • Engine speed: 1500 rpm or less • Transmission: neutral • The current diagnosis code does not occur.
	Requirements		Injector (No. 4 cylinder) stops injection and engine vibrations become slightly larger.
	Inspection result (Is the judging standard satisfied?)	YES	Go to transient fault (See Gr00.).
		NO	Go to step 2.

Step 2	Inspection items		Inspection by electronic control unit connector
	Maintenance item		Measure value of resistance between connector (GE96A) terminal No. 48 and 95.
	Inspection condition		Disconnect electronic control unit from harness and measure from connection side of harness connector.
	Requirements		0.255 ± 0.04 Ω (20°C {68°F})
	Inspection result (Is the judging standard satisfied?)	YES	Go to step 3.
		NO	Go to step 4.

Step 3	Inspection items		Inspection of electronic control unit connector
	Maintenance item		Inspection of connector
	Inspection condition		–
	Requirements		• Connector is properly connected. • No trace of water entry is found. • No corrosion is found in terminal. • Connection to terminal is appropriate.
	Inspection result (Is the judging standard satisfied?)	YES	Go to step 8.
		NO	Modify connector.

Step 4	Inspection items		Inspection of injector magnetic valve connector
	Maintenance item		Inspection of connector
	Inspection condition		–
	Requirements		• Connector is properly connected. • Connection to terminal is appropriate.
	Inspection result (Is the judging standard satisfied?)	YES	Go to step 5.
		NO	Modify connector.

Step 5	Inspection items		Inspection of injector magnetic valve unit
	Maintenance item		Measure value of resistance between connector terminal No. 1 and 2.
	Inspection condition		–
	Requirements		0.255 ± 0.04 Ω (20°C {68°F})
	Inspection result (Is the judging standard satisfied?)	YES	Go to step 6.
		NO	Replacement of injector

<Step 5 inspection diagram>

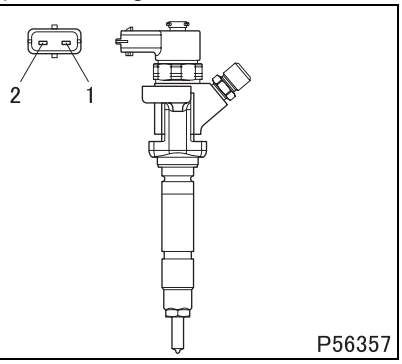

Step 6	Inspection items		Inspection of harness between injector magnetic valve and electronic control unit (power supply)
	Maintenance item		Check circuit between injector magnetic valve connector terminal No. 2 and electronic control unit connector (GE96A) terminal No. 95.
	Inspection condition		Disconnect electronic control unit from harness and measure from connection side of harness connector.
	Requirements		There is continuity.
	Inspection result (Is the judging standard satisfied?)	YES	Go to step 7.
		NO	Modify harness.

Step 7	Inspection items		Inspection of harness between injector magnetic valve and electronic control unit (ground)
	Maintenance item		Check circuit between injector magnetic valve connector terminal No. 1 and electronic control unit connector (GE96A) terminal No. 48.
	Inspection condition		Disconnect electronic control unit from harness and measure from connection side of harness connector.
	Requirements		There is continuity.
	Inspection result (Is the judging standard satisfied?)	YES	Go to step 8.
		NO	Modify harness.

Step 8	Inspection items		Inspection by control data
	Maintenance item		Perform actuator test item No. BC “Injector Test 2”.
	Inspection condition		• Vehicle: stationary (vehicle speed 0 km/h {0 MPH}) • Engine speed: 1500 rpm or less • Transmission: neutral • The current diagnosis code does not occur.
	Requirements		Injector (No. 4 cylinder) stops injection and engine vibrations become slightly larger.
	Inspection result (Is the judging standard satisfied?)	YES	Go to transient fault (See Gr00.).
		NO	Replacement of electronic control unit

[Fault code]
Diagnosis code: P0219/Flash code: 7
[Monitor]
Abnormality of engine speed
[Fault (outline)]
High signal range check
[Diagnosis check]
- Engine speed is monitored for abnormal increase.

[Code generation condition]
- Engine speed exceeds 3700 rpm.
  (Diagnosis code is displayed on first establishment of code generation condition.)

[Diagnosis check timing]
- Fault diagnosis is performed only once during the driving cycle.

[Diagnostic requirement]
–

[Control effected by electronic control unit during fault]
- Engine stopped

[Probable cause of trouble]
- Shifting mistake

[Recoverability]
- Recovered if signal becomes normal with starter switch in ON position.
  (Warning lamp is extinguished and diagnosis code is cleared simultaneously with recovery.)

[Fault diagnosis]
- Perform checks in the sequence of the following steps.

Step 1	Inspection items		Inspection by control data
	Maintenance item		Check if this diagnosis code occurs except in red zone.
	Inspection condition		• Starter switch: ON • Engine start (condition except in red zone)
	Requirements		Codes occur.
	Inspection result (Is the judging standard satisfied?)	YES	Replacement of electronic control unit
		NO	–

[Fault code]
Diagnosis code: P0222/Flash code: 16
[Monitor]
Failure of accelerator pedal position sensor 2
[Fault (outline)]
Low signal range check
[Diagnosis check]
- Accelerator pedal position sensor is monitored for output within specification.

[Code generation condition]
- Voltage from accelerator pedal position sensor 2 remains below 0.5 V for 1 second.
  (Warning lamp is lit and diagnosis code is displayed on first establishment of code generation condition.)

[Diagnosis check timing]
- Fault diagnosis is continuously performed during the driving cycle.

[Diagnostic requirement]
–

[Control effected by electronic control unit during fault]
- Accelerator pedal position sensor 1 is computed with accelerator pedal position sensor 2 only.
- In-use performance counter is stopped.
- Related fault check is stopped.

[Probable cause of trouble]
- Open-circuit or short-circuit of harness between electronic control unit and sensor
- Malfunction of each connector
- Malfunction of sensor
- Malfunction of electronic control unit

[Recoverability]
- Recovered if signal becomes normal with starter switch in ON position.
  (Warning lamp is extinguished and diagnosis code is cleared at fourth display of diagnosis code after recovery.)

[Electronic Control Unit Connection Diagram]

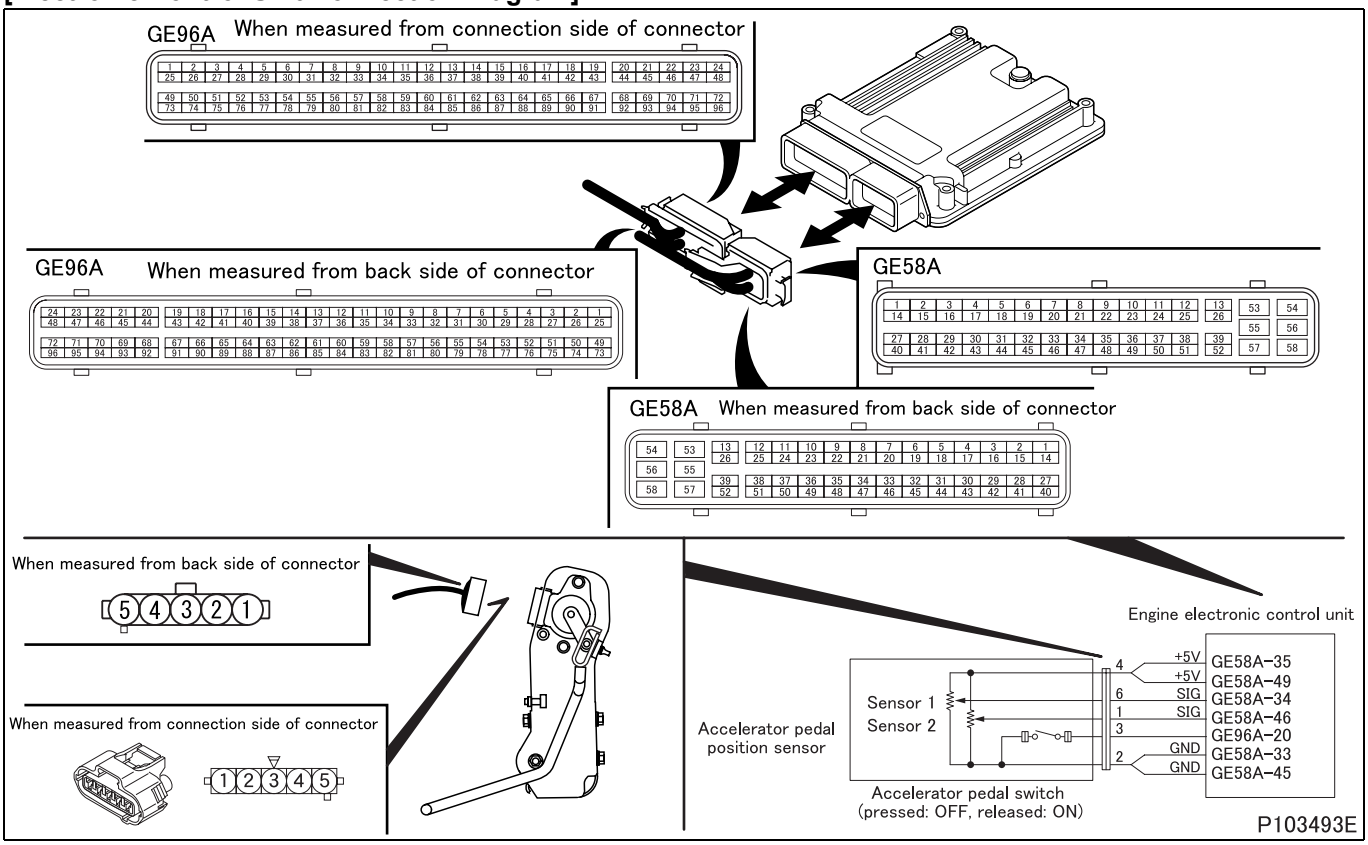

[Parts Identification and Location]

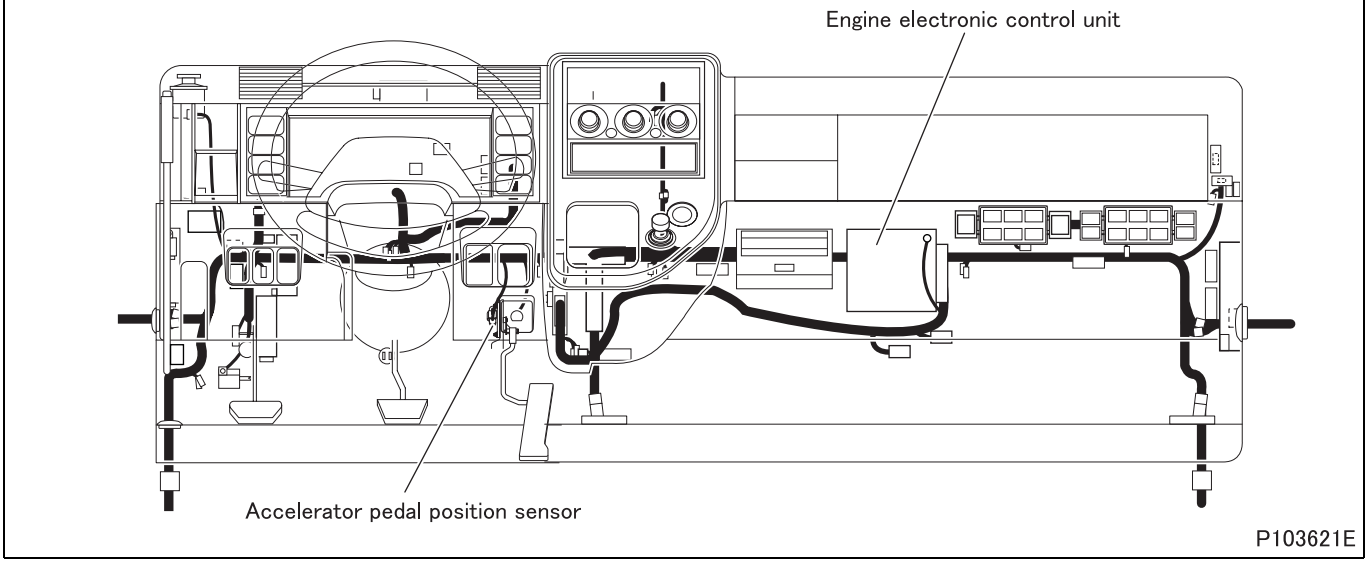

[Fault diagnosis]

- Perform checks in the sequence of the following steps.

Step 1	Inspection items		Inspection by control data
	Maintenance item		**<General Scanning Tool used>** • Measure item “Accelerator Pedal Position 2”. **<Multi-Use Tester used>** • Measure item No. 41 “Accelerator sensor voltage 2” of Service Data.
	Inspection condition		–
	Requirements		**<General Scanning Tool used>** • Accelerator pedal not pressed: 0% • Accelerator pedal pressed: 100% **<Multi-Use Tester used>** • Accelerator pedal not pressed: 0.85 ± 0.1 V • Accelerator pedal pressed: 4.15 ± 0.1 V
	Inspection result (Is the judging standard satisfied?)	YES	Go to transient fault (See Gr00.).
		NO	Go to step 2.

Step 2	Inspection items		Inspection by electronic control unit connector (signal)
	Maintenance item		Measure value of voltage between connector (GE58A) terminal No. 46 (+) and No. 45 and No. 33 (–).
	Inspection condition		• Starter switch: ON. • Engine is stopped. • Measure from back side of connector of harness with each device connected to harness.
	Requirements		• Accelerator pedal not pressed: 0.85 ± 0.1 V • Accelerator pedal pressed: 4.15 ± 0.1 V
	Inspection result (Is the judging standard satisfied?)	YES	Go to step 5.
		NO	Go to step 3.

Step 3	Inspection items		Inspection by electronic control unit connector (power supply)
	Maintenance item		Measure value of voltage between connector (GE58A) terminal No. 49 (+) and No. 45 (–).
	Inspection condition		• Starter switch: ON • Engine is stopped. • Measure from back side of connector of harness with each device connected to harness.
	Requirements		5 V
	Inspection result (Is the judging standard satisfied?)	YES	Go to step 4.
		NO	Go to step 5.

Step 4	Inspection items		Inspection by electronic control unit connector (ground)
	Maintenance item		Measure value of voltage between connector (GE58A) terminal No. 45 (+) and No. 53 (–).
	Inspection condition		• Starter switch: ON • Engine is stopped. • Measure from back side of connector of harness with each device connected to harness.
	Requirements		0 V
	Inspection result (Is the judging standard satisfied?)	YES	Go to step 6.
		NO	Go to step 5.

Step 5	Inspection items		Inspection of electronic control unit connector
	Maintenance item		Inspection of connector
	Inspection condition		–
	Requirements		• Connector is properly connected. • No trace of water entry is found. • No corrosion is found in terminal. • Connection to terminal is appropriate.
	Inspection result (Is the judging standard satisfied?)	YES	Go to step 12.
		NO	Modify connector.

Step 6	Inspection items		Inspection of sensor connector
	Maintenance item		Inspection of connector
	Inspection condition		–
	Requirements		• Connector is properly connected. • No trace of water entry is found. • No corrosion is found in terminal. • Connection to terminal is appropriate.
	Inspection result (Is the judging standard satisfied?)	YES	Go to step 7.
		NO	Modify connector.

Step 7	Inspection items		Inspection of accelerator pedal position sensor 2 unit
	Maintenance item		Measure value of voltage between connector terminal No. 1 (+) and 2 (–).
	Inspection condition		Apply voltage DC 5 V across connector terminals No. 4 (+) and 2 (–).

	Requirements		• Idle position A: 0.85 ± 0.1 V
			• Accelerator switch operating position B: 1.0 ± 0.24 V
			• Full load position C: 4.15 ± 0.1 V
			  • A: When accelerator lever is in contact with stopper
			  • B: When accelerator pedal is pressed until there is no continuity between terminals 2 and 3.
			  • C: When lever is in contact with full load stopper bolt

	Inspection result (Is the judging standard satisfied?)	YES	Go to step 8.
		NO	Adjustment of sensor (If the measurement deviates from the standard value after adjustment, replace the sensor.) (See “INSPECTION OF ELECTRICAL PARTS” – “INSPECTION OF ACCELERATOR PEDAL POSITION SENSOR”.)

<Step 7 inspection diagram>

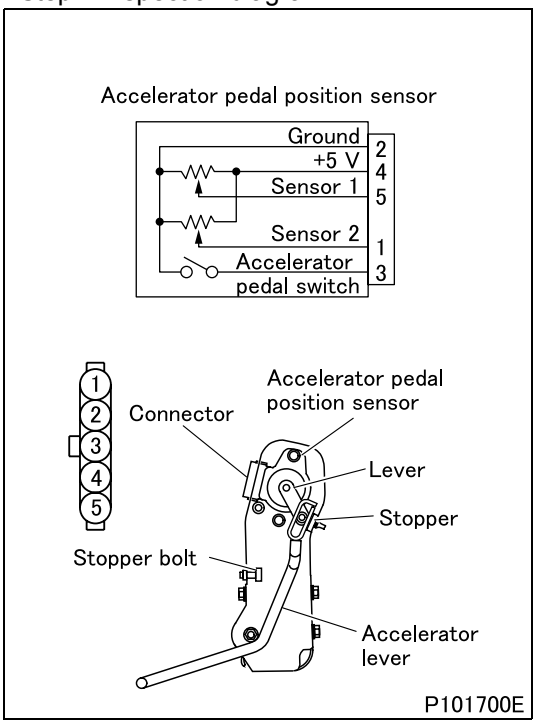

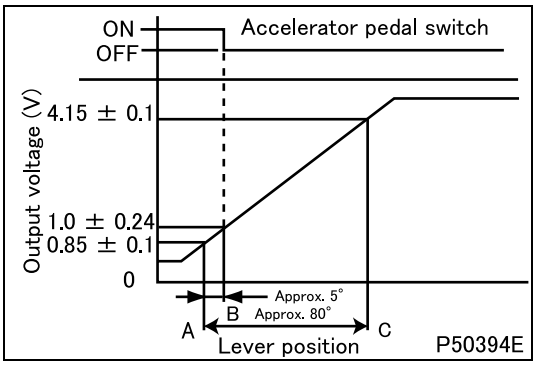

Step 8	Inspection items		Inspection by sensor connector
	Maintenance item		Measure value of voltage between connector terminal No. 4 (+) and 2 (–).
	Inspection condition		• Starter switch: ON • Engine is stopped. • Measure from back side of connector of harness with each device connected to harness.
	Requirements		5 V
	Inspection result (Is the judging standard satisfied?)	YES	Go to step 10.
		NO	Go to step 9.

Step 9	Inspection items		Inspection of harness between electronic control unit and sensor (power supply)
	Maintenance item		Check circuit between electronic control unit connector (GE58A) terminal No. 49 and sensor connector terminal No. 4.
	Inspection condition		Disconnect each device from harness and measure from connection side of harness connector.
	Requirements		There is continuity.
	Inspection result (Is the judging standard satisfied?)	YES	Go to step 12.
		NO	Modify harness.

Step 10	Inspection items		Inspection of harness between electronic control unit and sensor (ground)
	Maintenance item		Check circuit between electronic control unit connector (GE58A) terminal No. 45 and sensor connector terminal No. 2.
	Inspection condition		Disconnect each device from harness and measure from connection side of harness connector.
	Requirements		There is continuity.
	Inspection result (Is the judging standard satisfied?)	YES	Go to step 11.
		NO	Modify harness.

Step 11	Inspection items		Inspection of harness between electronic control unit and sensor (signal)
	Maintenance item		Check circuit between electronic control unit connector (GE58A) terminal No. 46 and sensor connector terminal No. 1.
	Inspection condition		Disconnect each device from harness and measure from connection side of harness connector.
	Requirements		There is continuity.
	Inspection result (Is the judging standard satisfied?)	YES	Go to step 12.
		NO	Modify harness.

Step 12	Inspection items		Inspection by control data
	Maintenance item		**<General Scanning Tool used>** • Measure item “Accelerator Pedal Position 2”. **<Multi-Use Tester used>** • Measure item No. 41 “Accelerator sensor voltage 2” of Service Data.
	Inspection condition		–
	Requirements		**<General Scanning Tool used>** • Accelerator pedal not pressed: 0% • Accelerator pedal pressed: 100% **<Multi-Use Tester used>** • Accelerator pedal not pressed: 0.85 ± 0.1 V • Accelerator pedal pressed: 4.15 ± 0.1 V
	Inspection result (Is the judging standard satisfied?)	YES	Go to transient fault (See Gr00.).
		NO	Replacement of electronic control unit

[Fault code]
Diagnosis code: P0223/Flash code: 16
[Monitor]
Failure of accelerator pedal position sensor 2
[Fault (outline)]
High signal range check
[Diagnosis check]
- Accelerator pedal position sensor is monitored for output within specification.

[Code generation condition]
- Voltage from accelerator pedal position sensor 2 remains over 4.7 V for 1 second.
  (Warning lamp is lit and diagnosis code is displayed on first establishment of code generation condition.)

[Diagnosis check timing]
- Fault diagnosis is continuously performed during the driving cycle.

[Diagnostic requirement]
–

[Control effected by electronic control unit during fault]
- Accelerator pedal position sensor 1 is computed with accelerator pedal position sensor 2 only.
- In-use performance counter is stopped.
- Related fault check is stopped.

[Probable cause of trouble]
- Open-circuit or short-circuit of harness between electronic control unit and sensor
- Malfunction of each connector
- Malfunction of sensor
- Malfunction of electronic control unit

[Recoverability]
- Recovered if signal becomes normal with starter switch in ON position.
  (Warning lamp is extinguished and diagnosis code is cleared at fourth display of diagnosis code after recovery.)

[Electronic Control Unit Connection Diagram]

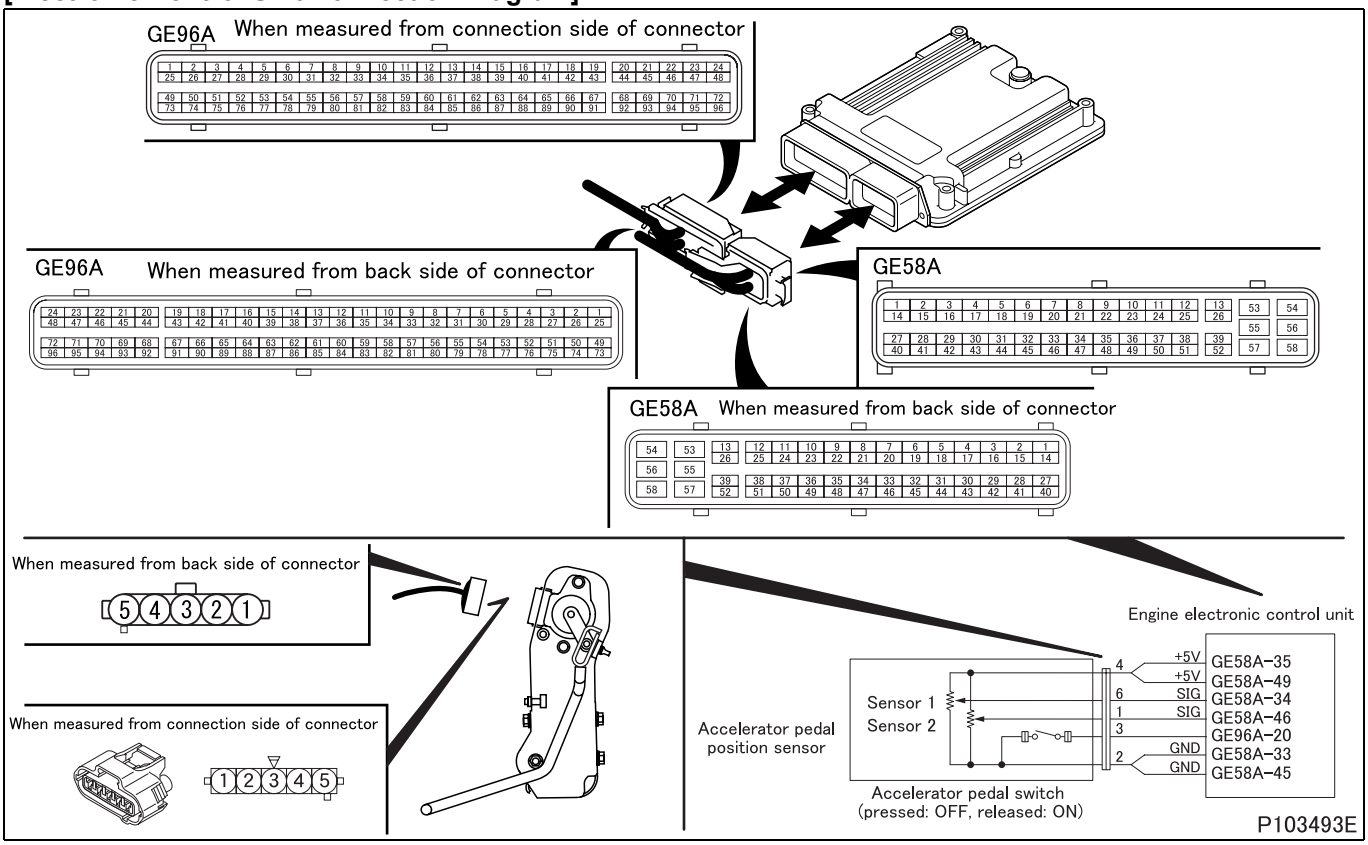

[Parts Identification and Location]

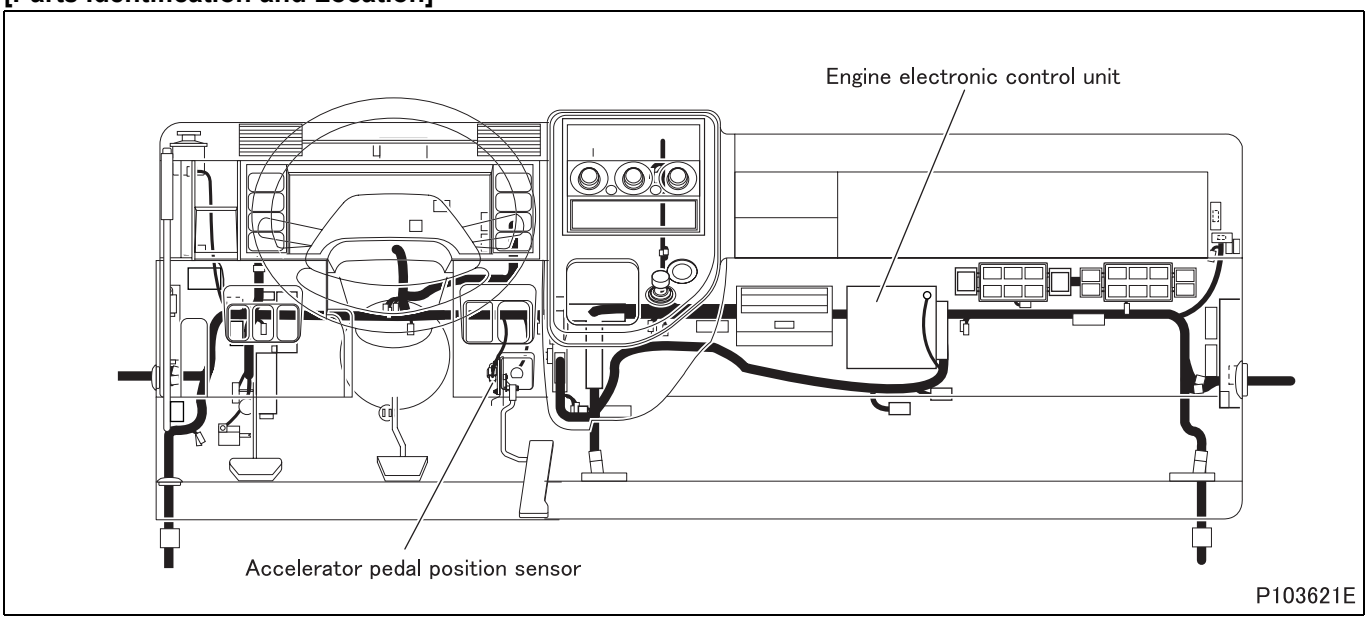

[Fault diagnosis]

- Perform checks in the sequence of the following steps.

Step 1	Inspection items		Inspection by control data
	Maintenance item		**<General Scanning Tool used>** • Measure item “Accelerator Pedal Position 2”. **<Multi-Use Tester used>** • Measure item No. 41 “Accelerator sensor voltage 2” of Service Data.
	Inspection condition		–
	Requirements		**<General Scanning Tool used>** • Accelerator pedal not pressed: 0% • Accelerator pedal pressed: 100% **<Multi-Use Tester used>** • Accelerator pedal not pressed: 0.85 ± 0.1 V • Accelerator pedal pressed: 4.15 ± 0.1 V
	Inspection result (Is the judging standard satisfied?)	YES	Go to transient fault (See Gr00.).
		NO	Go to step 2.

Step 2	Inspection items		Inspection by electronic control unit connector (signal)
	Maintenance item		Measure value of voltage between connector (GE58A) terminal No. 46 (+) and No. 45 and No. 33 (–).
	Inspection condition		• Starter switch: ON. • Engine is stopped. • Measure from back side of connector of harness with each device connected to harness.
	Requirements		• Accelerator pedal not pressed: 0.85 ± 0.1 V • Accelerator pedal pressed: 4.15 ± 0.1 V
	Inspection result (Is the judging standard satisfied?)	YES	Go to step 5.
		NO	Go to step 3.

Step 3	Inspection items		Inspection by electronic control unit connector (power supply)
	Maintenance item		Measure value of voltage between connector (GE58A) terminal No. 49 (+) and No. 45 (–).
	Inspection condition		• Starter switch: ON • Engine is stopped. • Measure from back side of connector of harness with each device connected to harness.
	Requirements		5 V
	Inspection result (Is the judging standard satisfied?)	YES	Go to step 4.
		NO	Go to step 5.

Step 4	Inspection items		Inspection by electronic control unit connector (ground)
	Maintenance item		Measure value of voltage between connector (GE58A) terminal No. 45 (+) and No. 53 (–).
	Inspection condition		• Starter switch: ON • Engine is stopped. • Measure from back side of connector of harness with each device connected to harness.
	Requirements		0 V
	Inspection result (Is the judging standard satisfied?)	YES	Go to step 6.
		NO	Go to step 5.

Step 5	Inspection items		Inspection of electronic control unit connector
	Maintenance item		Inspection of connector
	Inspection condition		–
	Requirements		• Connector is properly connected. • No trace of water entry is found. • No corrosion is found in terminal. • Connection to terminal is appropriate.
	Inspection result (Is the judging standard satisfied?)	YES	Go to step 12.
		NO	Inspection of connector

Step 6	Inspection items		Inspection of sensor connector
	Maintenance item		Inspection of connector
	Inspection condition		–
	Requirements		• Connector is properly connected. • No trace of water entry is found. • No corrosion is found in terminal. • Connection to terminal is appropriate.
	Inspection result (Is the judging standard satisfied?)	YES	Go to step 7.
		NO	Inspection of connector

Step 7	Inspection items		Inspection of accelerator pedal position sensor 2 unit
	Maintenance item		Measure value of voltage between connector terminal No. 1 (+) and 2 (–).
	Inspection condition		Apply voltage DC 5 V across connector terminals No. 4 (+) and 2 (–).

	Requirements		• Idle position A: 0.85 ± 0.1 V
			• Accelerator switch operating position B: 1.0 ± 0.24 V
			• Full load position C: 4.15 ± 0.1 V
			  • A: When accelerator lever is in contact with stopper
			  • B: When accelerator pedal is pressed until there is no continuity between terminals 2 and 3.
			  • C: When lever is in contact with full load stopper bolt

	Inspection result (Is the judging standard satisfied?)	YES	Go to step 8.
		NO	Adjustment of sensor (If the measurement deviates from the standard value after adjustment, replace the sensor.) (See “INSPECTION OF ELECTRICAL PARTS” – “INSPECTION OF ACCELERATOR PEDAL POSITION SENSOR”.)

<Step 7 inspection diagram>

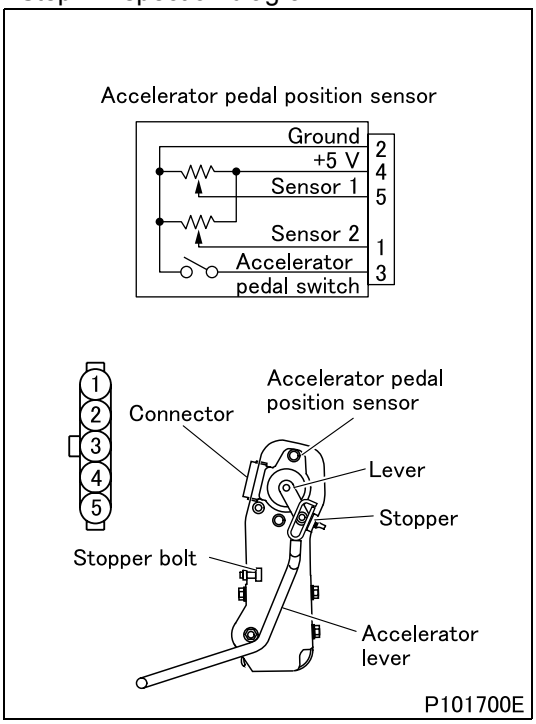

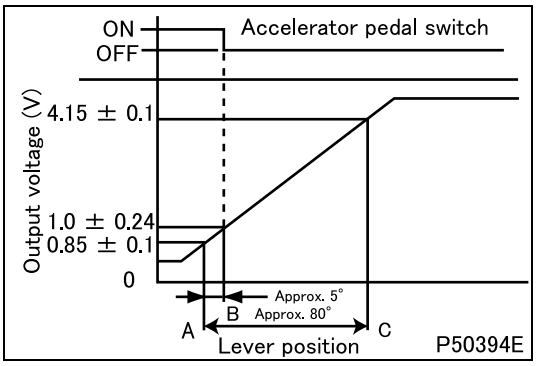

Step 8	Inspection items		Inspection by sensor connector
	Maintenance item		Measure value of voltage between connector terminal No. 4 (+) and 2 (–).
	Inspection condition		• Starter switch: ON • Engine is stopped. • Measure from back side of connector of harness with each device connected to harness.
	Requirements		5 V
	Inspection result (Is the judging standard satisfied?)	YES	Go to step 10.
		NO	Go to step 9.

Step 9	Inspection items		Inspection of harness between electronic control unit and sensor (power supply)
	Maintenance item		Check circuit between electronic control unit connector (GE58A) terminal No. 49 and sensor connector terminal No. 4.
	Inspection condition		Disconnect each device from harness and measure from connection side of harness connector.
	Requirements		There is continuity.
	Inspection result (Is the judging standard satisfied?)	YES	Go to step 12.
		NO	Modify harness.

Step 10	Inspection items		Inspection of harness between electronic control unit and sensor (ground)
	Maintenance item		Check circuit between electronic control unit connector (GE58A) terminal No. 45 and sensor connector terminal No. 2.
	Inspection condition		Disconnect each device from harness and measure from connection side of harness connector.
	Requirements		There is continuity.
	Inspection result (Is the judging standard satisfied?)	YES	Go to step 11.
		NO	Modify harness.

Step 11	Inspection items		Inspection of harness between electronic control unit and sensor (signal)
	Maintenance item		Check circuit between electronic control unit connector (GE58A) terminal No. 46 and sensor connector terminal No. 1.
	Inspection condition		Disconnect each device from harness and measure from connection side of harness connector.
	Requirements		There is continuity.
	Inspection result (Is the judging standard satisfied?)	YES	Go to step 12.
		NO	Modify harness.

Step 12	Inspection items		Inspection by control data
	Maintenance item		**<General Scanning Tool used>** • Measure item “Accelerator Pedal Position 2”. **<Multi-Use Tester used>** • Measure item No. 41 “Accelerator sensor voltage 2” of Service Data.
	Inspection condition		–
	Requirements		**<General Scanning Tool used>** • Accelerator pedal not pressed: 0% • Accelerator pedal pressed: 100% **<Multi-Use Tester used>** • Accelerator pedal not pressed: 0.85 ± 0.1 V • Accelerator pedal pressed: 4.15 ± 0.1 V
	Inspection result (Is the judging standard satisfied?)	YES	Go to transient fault (See Gr00.).
		NO	Replacement of electronic control unit

[Fault code]
Diagnosis code: P0226/Flash code: 28
[Monitor]
Failure of intake throttle
[Fault (outline)]
- Signal range check
- Ref voltage

[Diagnosis check]
- Throttle electronic drive unit monitors intake throttle internal circuit for fault (through throttle position sensor).

[Code generation condition]
- Diagnosis code is generated under either of the following conditions.
  (Warning lamp is lit and diagnosis code is displayed on third establishment of code generation condition.)
- Position sensor output voltage remains out of specification (open: above 4.7 V, close: below 0.2 V) for 1 second.
- Position sensor power voltage remains below 4.1 V for 1 second.

[Diagnosis check timing]
- Fault diagnosis is continuously performed during the driving cycle.

[Diagnostic requirement]
- Controller area network communication in order

[Control effected by electronic control unit during fault]
- Exhaust gas recirculation control is stopped.
- Throttle controls disabled
- Diesel particulate filter regeneration is stopped.
- Intake throttle actuator test is inhibited.
- Related fault check is stopped.

[Probable cause of trouble]
- Open-circuit or short-circuit of harness between electronic drive unit and throttle actuator
- Malfunction of each connector
- Malfunction of throttle motor (built in throttle actuator)
- Malfunction of throttle position sensor (built in throttle actuator)
- Malfunction of electronic drive unit
- Malfunction of electronic drive unit relay

[Recoverability]
- Recovered if signal becomes normal when starter switch is turned OFF to ON (power supply resumed to electronic control unit).
  (Warning lamp is extinguished and diagnosis code is cleared at fourth display of diagnosis code after recovery.)

[Electronic Control Unit Connection Diagram]

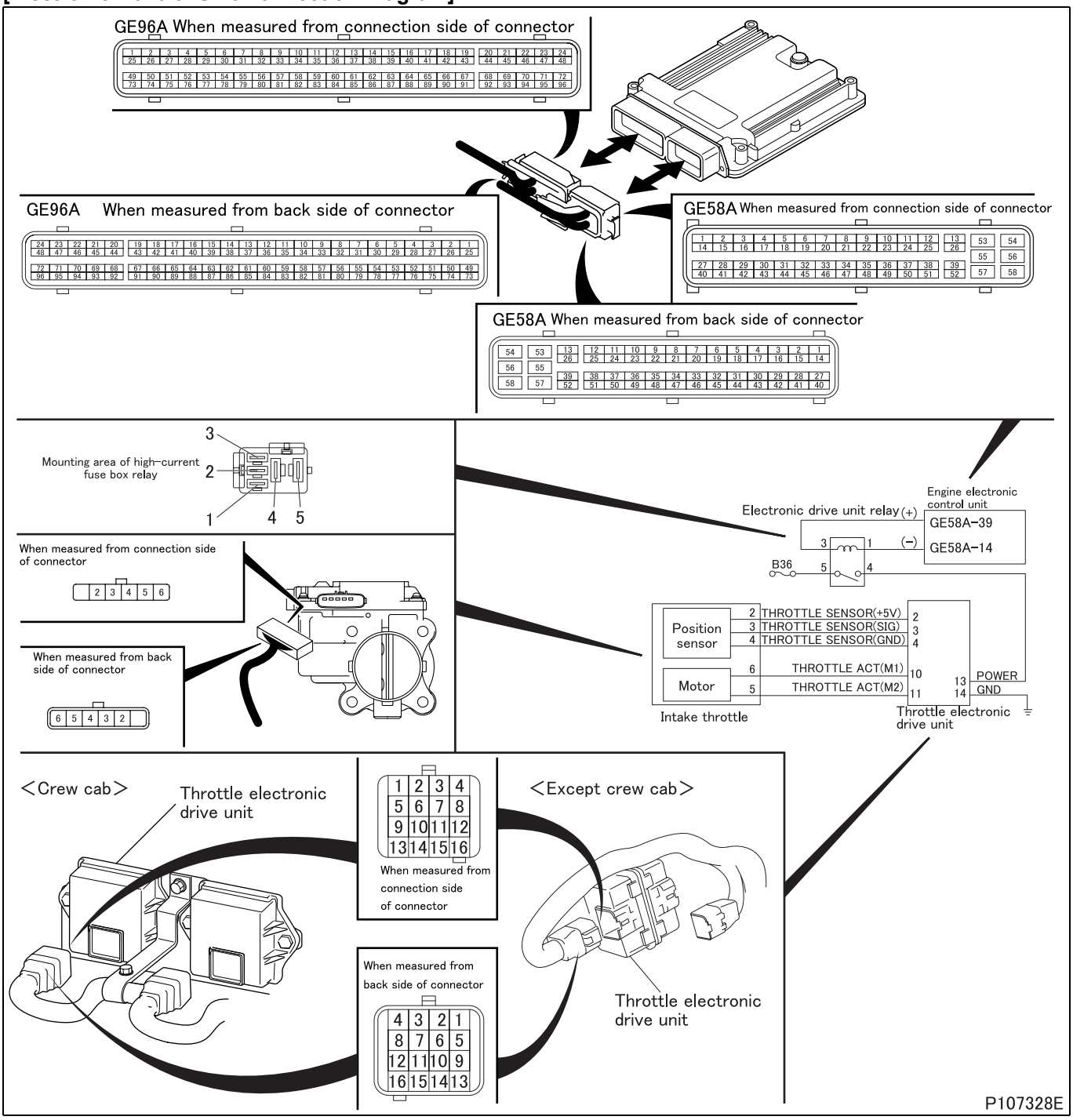

[Parts Identification and Location]

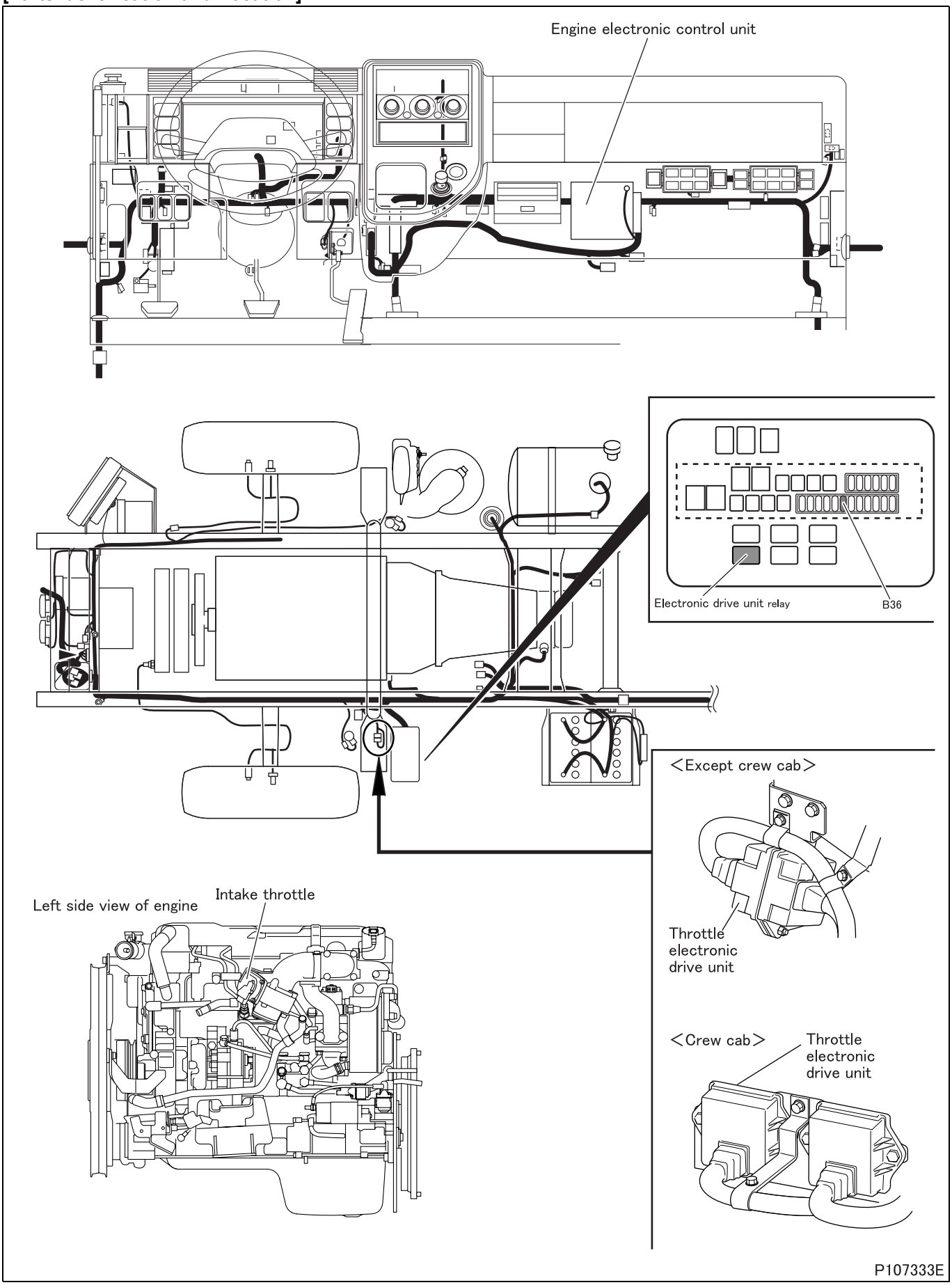

[Fault diagnosis]

- Perform checks in the sequence of the following steps.

Step 1	Inspection items		Inspection by control data
	Maintenance item		Perform actuator test item No. A3 “Intake Throttle 1”
	Inspection condition		• Vehicle: stationary (vehicle speed 0 km/h {0 MPH}) • Starter switch: ON (engine started) • Transmission: neutral • Diagnosis switch: OFF (fuse removed)
	Requirements		Actual position matches with target value set by Multi-Use Tester. (check with service data “53: Actual Intake Throttle Position”)
	Inspection result (Is the judging standard satisfied?)	YES	Go to transient fault (See Gr00.).
		NO	Go to step 2.

Step 2	Inspection items		Inspection of electronic drive unit connector
	Maintenance item		Inspection of connector
	Inspection condition		–
	Requirements		• Connector is properly connected. • No trace of water entry is found. • No corrosion is found in terminal. • Connection to terminal is appropriate.
	Inspection result (Is the judging standard satisfied?)	YES	Go to step 3.
		NO	Modify connector.

Step 3	Inspection items		Inspection of throttle actuator connector
	Maintenance item		Inspection of connector
	Inspection condition		–
	Requirements		• Connector is properly connected. • No trace of water entry is found. • No corrosion is found in terminal. • Connection to terminal is appropriate.
	Inspection result (Is the judging standard satisfied?)	YES	Go to step 4.
		NO	Modify connector.

Step 4	Inspection items		Inspection by control data
	Maintenance item		Check if following diagnosis codes occur simultaneously. • P0685 “EDU Relay (Open)” • P0686 “EDU Relay (Low)” • P0687 “EDU Relay (High)”
	Inspection condition		Starter switch: ON
	Requirements		Codes occur.
	Inspection result (Is the judging standard satisfied?)	YES	Inspect diagnosis code that is occurring.
		NO	Go to step 5.

Step 5	Inspection items		Inspection of electronic drive unit connector (power supply)
	Maintenance item		Measure value of voltage between connector terminal No. 13 (+) and 14 (–).
	Inspection condition		• Remove connector and measure from harness side. • Starter switch: ON • Perform actuator test item No. AF “EDU Relay”
	Requirements		Same as battery voltage.
	Inspection result (Is the judging standard satisfied?)	YES	Go to step 10.
		NO	Go to step 6.

Step 6	Inspection items		Inspection of relay connector
	Maintenance item		Inspection of connector
	Inspection condition		–
	Requirements		• Connector is properly connected. • No trace of water entry is found. • No corrosion is found in terminal. • Connection to terminal is appropriate.
	Inspection result (Is the judging standard satisfied?)	YES	Go to step 7.
		NO	Modify connector.

Step 7	Inspection items		Inspection of harness between fuse and relay
	Maintenance item		Check circuit between fuse No. B35 and relay connector terminal No. 5
	Inspection condition		Disconnect each device from harness and measure from connection side of harness connector.
	Requirements		There is continuity.
	Inspection result (Is the judging standard satisfied?)	YES	Go to step 8.
		NO	Modify harness.

Step 8	Inspection items		Inspection of harness between relay and electronic drive unit
	Maintenance item		Check circuit between relay connector terminal No. 4 and electronic drive unit connecter terminal No. 13
	Inspection condition		Disconnect each device from harness and measure from connection side of harness connector.
	Requirements		There is continuity.
	Inspection result (Is the judging standard satisfied?)	YES	After replacement of relay, go to step 9.
		NO	Modify harness.

Step 9	Inspection items		Inspection of harness between electronic drive unit and ground
	Maintenance item		Check circuit between following electronic drive unit connector terminals • Electronic drive unit ground: terminal No. 14 - chassis ground • Sensor ground: terminal No. 4 - 14
	Inspection condition		Disconnect each device from harness and measure from connection side of harness connector.
	Requirements		There is continuity.
	Inspection result (Is the judging standard satisfied?)	YES	Go to step 10.
		NO	Modify harness.

Step 10	Inspection items		Inspection of electronic drive unit connector (motor)
	Maintenance item		Measure value of resistance between connector terminal No. 10 and 11.
	Inspection condition		Remove connector and measure from harness side.
	Requirements		0.3 to 80 Ω
	Inspection result (Is the judging standard satisfied?)	YES	Go to step 13.
		NO	Go to step 11.

Step 11	Inspection items		Inspection of harness between electronic drive unit and throttle actuator (motor)
	Maintenance item		Check circuit between following connector terminals. • Motor (1) : electronic drive unit connector terminal No. 10 - throttle actuator connector terminal No. 6 • Motor (2) : electronic drive unit connector terminal No. 11 - throttle actuator connector terminal No. 5
	Inspection condition		Disconnect each device from harness and measure from connection side of harness connector.
	Requirements		There is continuity.
	Inspection result (Is the judging standard satisfied?)	YES	Go to step 12.
		NO	Modify harness.

Step 12	Inspection items		Inspection of throttle actuator unit (motor)
	Maintenance item		Measure value of resistance between connector terminal No. 5 and 6.
	Inspection condition		• Keep throttle actuator installed on vehicle. • Remove connector, and measure throttle actuator side.
	Requirements		0.3 to 80 Ω
	Inspection result (Is the judging standard satisfied?)	YES	Go to step 13.
		NO	Replacement of throttle actuator

<Step 12 inspection diagram>

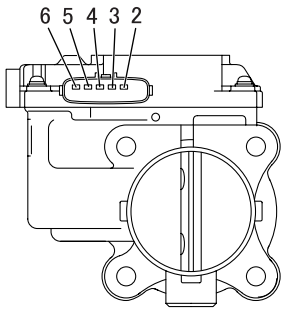

Step 13	Inspection items		Inspection of throttle actuator connector (position sensor: power supply)
	Maintenance item		Measure value of voltage between connector terminal No. 2 (+) and 4 (–).
	Inspection condition		• Measure from back side of connector of harness with each device connected to harness. • Starter switch: ON
	Requirements		5 V
	Inspection result (Is the judging standard satisfied?)	YES	Go to step 14.
		NO	Go to step 15.

Step 14	Inspection items		Inspection of electronic drive unit connector (position sensor: signal)
	Maintenance item		Measure value of voltage between connector terminal No. 3 (+) and 4 (–).
	Inspection condition		• Measure from back side of connector of harness with each device connected to harness. • Starter switch: ON • Perform actuator test item No. A3 “Intake Throttle 1”
	Requirements		• Valve fully closed: 0.5 V • Valve fully opened: 4.375 V
	Inspection result (Is the judging standard satisfied?)	YES	Go to step 16.
		NO	Go to step 15.back side

Step 15	Inspection items		Inspection of harness between electronic drive unit and throttle actuator (position sensor)
	Maintenance item		Check circuit between following connector terminals. • Sensor (power supply): electronic drive unit connector terminal No. 2 - throttle actuator connector terminal No. 2 • Sensor (signal): electronic drive unit connector terminal No. 3 - throttle actuator connector terminal No. 3 • Sensor (ground): electronic drive unit connector terminal No. 4 - throttle actuator connector terminal No. 4
	Inspection condition		Disconnect each device from harness and measure from connection side of harness connector.
	Requirements		There is continuity.
	Inspection result (Is the judging standard satisfied?)	YES	After replacement of throttle actuator, go to step 16
		NO	Modify harness.

Step 16	Inspection items		Inspection by control data
	Maintenance item		Perform actuator test item No. A3 “Intake Throttle 1”
	Inspection condition		• Vehicle: stationary (vehicle speed 0 km/h {0 MPH}) • Starter switch: ON (engine started) • Transmission: neutral • Diagnosis switch: OFF (fuse removed)
	Requirements		Actual position matches with target value set by Multi-Use Tester. (check with service data “53: Actual Intake Throttle Position”)
	Inspection result (Is the judging standard satisfied?)	YES	Go to transient fault (See Gr00.).
		NO	Replacement of electronic drive unit

[Fault code]
Diagnosis code: P0234/Flash code: 32, 54
[Monitor]
Overboost
[Fault (outline)]
Overboost
[Diagnosis check]
Either of the following is monitored.
<Condition (1)>
- Actual boost pressure is detected by boost pressure sensor and compared with standard pressure recorded in engine electronic control unit.

<Condition (2), (3)>
- Actual boost pressure is detected by boost pressure sensor and compared with permissible pressure recorded in engine electronic control unit (engine protection).

[Code generation condition]
Diagnosis code is generated under either of the following conditions.
<Condition (1)>
- Difference between target boost pressure and actual boost pressure remains more than specified for 10 seconds (overboost status). (Warning lamp (orange) is lit and diagnosis code is displayed on third establishment of code generation condition.)

<Condition (2)>
- The remaining of actual boost pressure higher than permissible pressure recorded in engine electronic control unit for 10 seconds is repeated five times (pre-diagnosis). (Diagnosis code is displayed on first establishment of code generation condition.)

<Condition (3)>
- Status of condition (2) remaining for another 10 seconds is repeated 5 times (final diagnosis). (Warning lamp (red) is lit and diagnosis code is displayed on first establishment of code generation condition.)

[Diagnosis check timing]
- Fault diagnosis is performed only once during the driving cycle.

[Diagnostic requirement]
- Engine operating mode: normal (engine in operation)
- Water temperature: 65 to 120°C {149 to 248°F}
- Atmospheric pressure: 828 to 1100 mbar {12 to 15.95 psi}
- Intake air temperature: –7 to 60°C {19 to 140°F}
- Engine speed: 600 to 3000 rpm
- Variation in engine speed: less than 300 rpm/s
- Diesel particulate filter regeneration control: not effected
- Exhaust gas recirculation valve: in order
- Intake throttle: in order
- Turbocharger actuator: in order
- Controller area network communication of each electronic drive unit (exhaust gas recirculation, intake throttle and turbocharger): in order
- Atmospheric pressure sensor: in order
- Boost pressure sensor: in order
- Water temperature sensor: in order
- Intake air temperature sensor: in order
- Sensor 5 V power supply: in order
- Battery voltage: in order
- MPROP (rail pressure control valve): in order
- Injector: in order
- Exhaust shutter: in order
- Exhaust gas recirculation cooler: in order
- Starter switch circuit: in order

[Control effected by electronic control unit during fault]
Electronic control unit differs in the way of control by the diagnosis check item.
<Overboost>
- Engine torque is limited.
- Turbocharger is controlled to open side.

<Deviation in boost pressure>
- Exhaust gas recirculation control is stopped.
- Throttle controls disabled
- Related fault check is stopped.

[Probable cause of trouble]
- Boost pressure incorrectly adjusted
- Mechanical failure of turbocharger unit

[Recoverability]
- Recovered if signal becomes normal when starter switch is turned OFF to ON (power supply resumed to electronic control unit).
  (Timing of warning lamp/diagnosis code OFF depends on condition.)

<Condition (1)>
- Lamp is extinguished and code is cleared at fourth diagnosis code display after recovery.

<Condition (2)>
- Diagnosis code is cleared simultaneously with recovery.

<Condition (3)>
- Lamp is extinguished and code is cleared simultaneously with recovery.

[Fault diagnosis]

- Perform checks in the sequence of the following steps.

Step 1	Inspection items		Inspection by control data
	Maintenance item		Check if following diagnosis codes occur simultaneously. • P0045 “VGT Acutuator (Open)” • P0046 “VGT Acutuator (Performance)” • P0047 “VGT Acutuator (Low)” • P0069 “Boost Press SNSR (Correlation)” • P0236 “Boost Press SNSR (Plausi)” • P0237 “Boost Press SNSR (Low)” • P0238 “Boost Press SNSR (High)” • P0401 “EGR Flow (Insufficient)” • P0402 “EGR Flow (Excessive)” • P0403 “EGR1 (Acutuator Circuit)” • P0404 “EGR System” • P0409 “EGR1 (Position Sensor)” • P0562 “Power Supply Voltage (Low)” • P0563 “Power Supply Voltage (High)” • P0600 “CAN Communication” • P0607 “ECU System” • P060B “A/D Converter” • P061B “ECU Performance (Calc)” • P061C “ECU Performance (Ne)” • P0685 “EDU Relay (Open)” • P0686 “EDU Relay (Low)” • P0687 “EDU Relay (High)” • P2002 “DPF MFF” • P2228 “Atm Press SNSR (Low)” • P2229 “Atm Press SNSR (High)” • P2263 “VGT System” • P2413 “EGR System” • P2453 “DPF Diff SNSR (Plausi) & MFF” • P2454 “DPF Diff SNSR (Low) & MFF” • P2455 “DPF Diff SNSR (High) & MFF” • P2457 “EGR Cooler Performance”
	Inspection condition		Starter switch: ON Do not start engine.
	Requirements		Codes occur.
	Inspection result (Is the judging standard satisfied?)	YES	Inspect diagnosis code that is occurring.
		NO	Go to step 2.

Step 2	Inspection items		Check of exhaust system
	Maintenance item		Front pipe, diesel particulate filter, tail pipe
	Inspection condition		Starter switch: OFF
	Requirements		Blocked
	Inspection result (Is the judging standard satisfied?)	YES	Clean or replace parts.
		NO	Go to step 3.

Step 3	Inspection items		Check of turbocharger appearance
	Maintenance item		Appearance of turbocharger
	Inspection condition		Starter switch: OFF
	Requirements		Air cylinder binds.
	Inspection result (Is the judging standard satisfied?)	YES	Replacement of turbocharger
		NO	Go to step 4.

Step 4	Inspection items		Inspection by control data
	Maintenance item		**<General Scanning Tool used>** • Measure item “Intake MAP”. **<Multi-Use Tester used>** • Measure item No. 21 “Boost Pressure” of Service Data.
	Inspection condition		For boost pressure measurement and correction data calculation, see Gr15.
	Requirements		Boost pressure is normal.
	Inspection result (Is the judging standard satisfied?)	YES	Go to transient fault (See Gr00.).
		NO	Replacement of turbocharger

[Fault code]
Diagnosis code: P0236/Flash code: 32
[Monitor]
Characteristic abnormality of boost pressure sensor
[Fault (outline)]
- Offset and gain drift (High)
- Offset and gain drift (Low)

[Diagnosis check]
Boost pressure is monitored with engine in the following conditions.
<Low speed operation>
- Engine speed: 800 rpm
- Intake throttle opening: 14% or more

<High speed operation>
- Engine speed: 2100 rpm
- Intake throttle opening: 60% or more
- Turbocharger opening: 50% or more

[Code generation condition]
<Low speed operation>
- Boost pressure: Remains at 1125 mbar {16.31 psi} or higher for 10 consecutive seconds.
  (Warning lamp is lit and diagnosis code is displayed on third establishment of code generation condition.)

<High speed operation>
- Boost pressure: Remains at 1300 mbar {18.85 psi} or lower for 10 consecutive seconds.
  (Warning lamp is lit and diagnosis code is displayed on third establishment of code generation condition.)

[Diagnosis check timing]
- Fault diagnosis is performed only once during the driving cycle.

[Diagnostic requirement]
<High speed operation>
- Engine operating mode: normal (engine in operation)
- Engine speed: less than 800 rpm
- Fuel injection quantity: below 25 mg/cyc
- Intake throttle valve opening: more than 14%
- Air flow sensor: in order
- Exhaust gas recirculation valve: in order
- Intake throttle: in order
- Turbocharger actuator: in order
- Controller area network communication of each electronic drive unit (exhaust gas recirculation, intake throttle and turbocharger): in order
- Exhaust gas recirculation flow rate and exhaust gas recirculation valve operation: in order
- Atmospheric pressure sensor: normal in output signal
- Boost pressure sensor: in order
- Water temperature sensor: in order
- Intake air temperature sensor: in order
- Exhaust gas recirculation cooler: in order
- Sensor 5 V power supply: in order
- Battery voltage: in order
- Injector: in order
- MPROP (rail pressure control valve): in order
- Fuel feed when engine is idling: in order
- Exhaust shutter 3-way magnetic valve: in order

<Low speed operation>
- Engine operating mode: normal (engine in operation)
- Engine speed: more than 2100 rpm
- Fuel injection quantity: above 67 mg/cyc
- Intake throttle valve opening: more than 60%
- Turbocharger position: more than 40%
- Air flow sensor: in order
- Exhaust gas recirculation valve: in order
- Intake throttle: in order
- Turbocharger actuator: in order
- Controller area network communication of each electronic drive unit (exhaust gas recirculation, intake throttle and turbocharger): in order
- Exhaust gas recirculation flow rate and exhaust gas recirculation valve operation: in order
- Atmospheric pressure sensor: in order
- Boost pressure sensor: normal in output signal
- Water temperature sensor: in order
- Intake air temperature sensor: in order
- Exhaust gas recirculation cooler: in order
- Sensor 5 V power supply: in order
- Battery voltage: in order
- Injector: in order
- MPROP (rail pressure control valve): in order
- Fuel feed when engine is idling: in order
- Exhaust shutter 3-way magnetic valve: in order

[Control effected by electronic control unit during fault]
- Exhaust gas recirculation control is stopped.
- Throttle controls disabled
- Related fault check is stopped.

[Probable cause of trouble]
- Open-circuit or short-circuit of harness between electronic control unit and sensor
- Malfunction of each connector
- Malfunction of sensor
- Malfunction of electronic control unit

[Recoverability]
- Recovered if signal becomes normal when starter switch is turned OFF to ON (power supply resumed to electronic control unit).
  (Warning lamp is extinguished and diagnosis code is cleared at fourth display of diagnosis code after recovery.)

[Electronic Control Unit Connection Diagram]

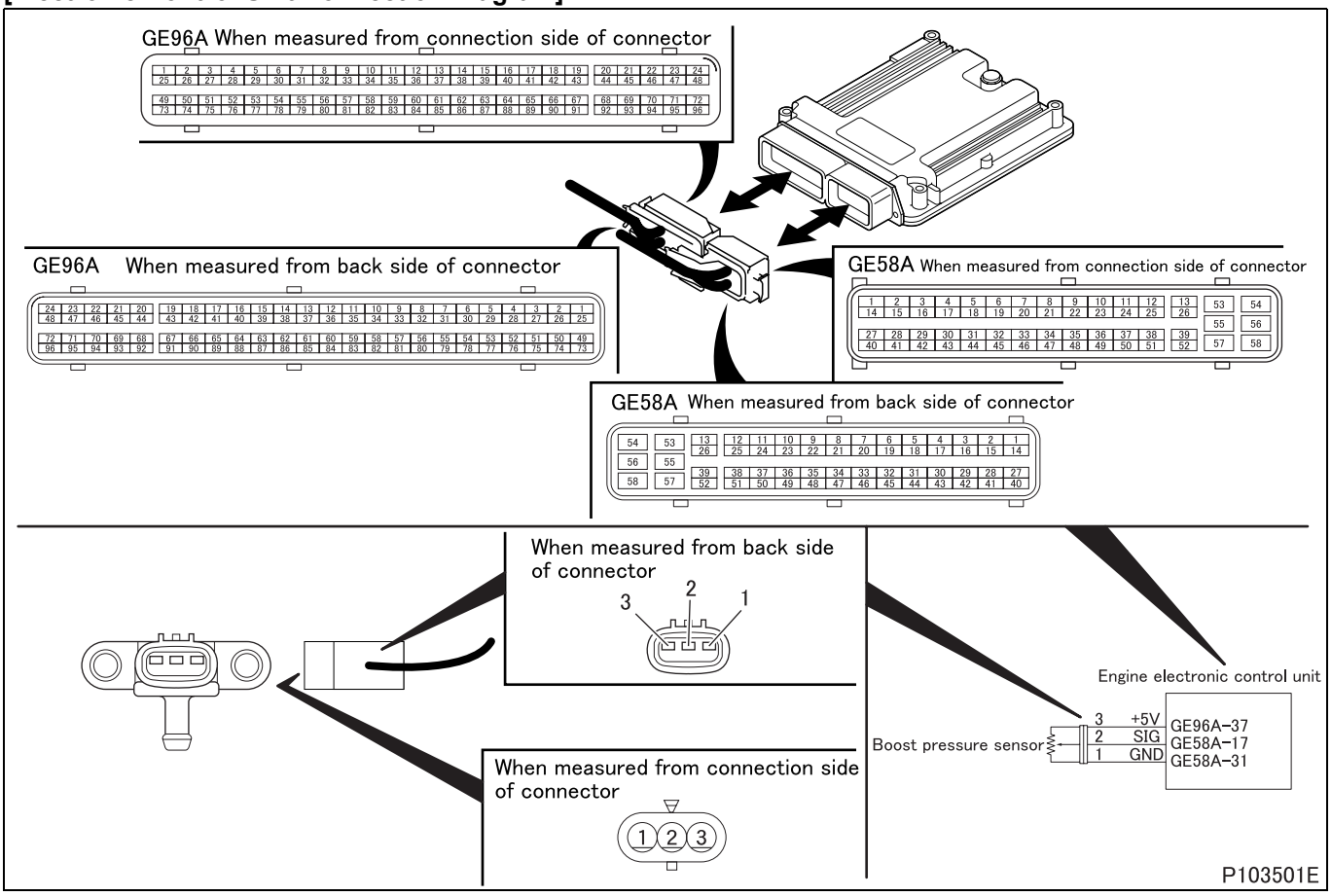

[Parts Identification and Location]

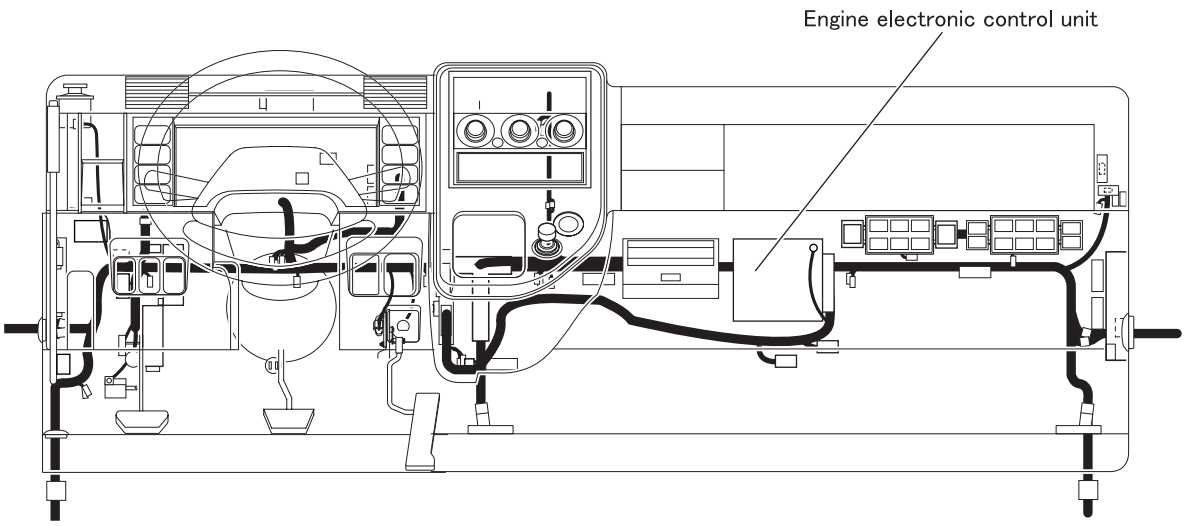

Left side view of engine

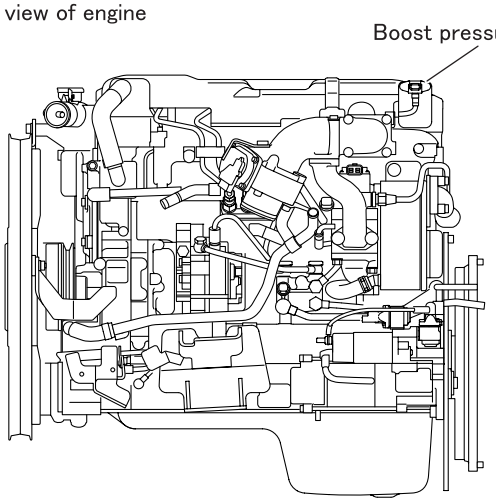

P103628E

[Fault diagnosis]

- Perform checks in the sequence of the following steps.

Step 1	Inspection items		Inspection by control data
	Maintenance item		**<General Scanning Tool used>** • Measure item “Intake MAP”. **<Multi-Use Tester used>** • Measure item No. 21 “Boost Pressure” of Service Data.
	Inspection condition		Starter switch ON (engine stationary) → After engine has started, press accelerator pedal.
	Requirements		Coincides with atmospheric pressure → Gradually increases
	Inspection result (Is the judging standard satisfied?)	YES	Go to transient fault (See Gr00.).
		NO	Go to step 2.

Step 2	Inspection items		Inspection by electronic control unit connector (signal)
	Maintenance item		Measure value of voltage between connector (GE96A) terminal No. 34 (+) and 14 (–).
	Inspection condition		• Measure from back side of connector of harness with each device connected to harness. • Engine started
	Requirements		0.5 to 4.5 V
	Inspection result (Is the judging standard satisfied?)	YES	Go to step 5.
		NO	Go to step 3.

Step 3	Inspection items		Inspection by electronic control unit connector (power supply)
	Maintenance item		Measure value of voltage between connector (GE96A) terminal No. 37 (+) and 14 (–).
	Inspection condition		• Measure from back side of connector of harness with each device connected to harness. • Starter switch: ON
	Requirements		5 V
	Inspection result (Is the judging standard satisfied?)	YES	Go to step 4.
		NO	Go to step 5.

Step 4	Inspection items		Inspection by electronic control unit connector (ground)
	Maintenance item		Measure value of voltage between connector (GE96A) terminal No. 14 (+) and (GE58A) terminal No. 53 (–).
	Inspection condition		• Measure from back side of connector of harness with each device connected to harness. • Starter switch: ON
	Requirements		0 V
	Inspection result (Is the judging standard satisfied?)	YES	Go to step 6.
		NO	Go to step 5.

Step 5	Inspection items		Inspection of electronic control unit connector
	Maintenance item		Inspection of connector
	Inspection condition		–
	Requirements		• Connector is properly connected. • No trace of water entry is found. • No corrosion is found in terminal. • Connection to terminal is appropriate.
	Inspection result (Is the judging standard satisfied?)	YES	Go to step 12.
		NO	Modify connector.

Step 6	Inspection items		Inspection of sensor connector
	Maintenance item		Inspection of connector
	Inspection condition		–
	Requirements		• Connector is properly connected. • No trace of water entry is found. • No corrosion is found in terminal. • Connection to terminal is appropriate.
	Inspection result (Is the judging standard satisfied?)	YES	Go to step 7.
		NO	Modify connector.

Step 7	Inspection items		Inspection of sensor unit
	Maintenance item		Measure voltage developing across connector terminal No. 2 (+) and 1 (–) when air pressure (gauge pressure) is gradually applied.
	Inspection condition		Apply voltage DC 5 V across connector terminals No. 3 (+) and 1 (–).
	Requirements		• 99 kPa {14 psi, 1.0 kgf/cm^2}: Approx. 2.5 V • 232.3 kPa {34 psi, 2.4 kgf/cm^2}: Approx. 4.5 V
	Inspection result (Is the judging standard satisfied?)	YES	Go to step 8.
		NO	Replacement of sensor

<Step 7 inspection diagram>

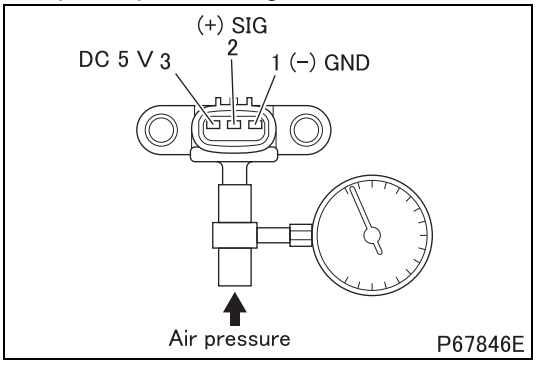

Step 8	Inspection items		Inspection of harness between electronic control unit and sensor (power supply)
	Maintenance item		Measure value of voltage between connector terminal No. 3 (+) and 1 (–).
	Inspection condition		• Measure from back side of connector of harness with each device connected to harness. • Starter switch: ON
	Requirements		5 V
	Inspection result (Is the judging standard satisfied?)	YES	Go to step 10.
		NO	Go to step 9.

Step 9	Inspection items		Inspection of harness between electronic control unit and sensor (power supply)
	Maintenance item		Check circuit between sensor connector terminal No. 3 and electronic control unit connector (GE96A) terminal No. 37.
	Inspection condition		Disconnect each device from harness and measure from connection side of harness connector.
	Requirements		There is continuity.
	Inspection result (Is the judging standard satisfied?)	YES	Go to step 12.
		NO	Modify harness.

Step 10	Inspection items		Inspection of harness between electronic control unit and sensor (ground)
	Maintenance item		Check circuit between sensor connector terminal No. 1 and electronic control unit connector (GE96A) terminal No. 14.
	Inspection condition		Disconnect each device from harness and measure from connection side of harness connector.
	Requirements		There is continuity.
	Inspection result (Is the judging standard satisfied?)	YES	Go to step 11.
		NO	Modify harness.

Step 11	Inspection items		Inspection of harness between electronic control unit and sensor (signal)
	Maintenance item		Check circuit between sensor connector terminal No. 2 and electronic control unit connector (GE96A) terminal No. 34.
	Inspection condition		Disconnect each device from harness and measure from connection side of harness connector.
	Requirements		There is continuity.
	Inspection result (Is the judging standard satisfied?)	YES	Go to step 12.
		NO	Modify harness.

Step 12	Inspection items		Inspection by control data
	Maintenance item		**<General Scanning Tool used>** • Measure item “Intake MAP”. **<Multi-Use Tester used>** • Measure item No. 21 “Boost Pressure” of Service Data.
	Inspection condition		Starter switch ON (engine stationary) → After engine has started, press accelerator pedal.
	Requirements		Coincides with atmospheric pressure → Gradually increases
	Inspection result (Is the judging standard satisfied?)	YES	Go to transient fault (See Gr00.).
		NO	Replacement of electronic control unit

[Fault code]
Diagnosis code: P0237/Flash code: 32
[Monitor]
Failure of boost pressure sensor
[Fault (outline)]
Low signal range check
[Diagnosis check]
- Boost sensor output voltage is monitored.

[Code generation condition]
- Boost sensor output voltage remains below 0.098 V for 1 second. (sensor pressure: 400 mbar {5.8 psi} or less)
  (Warning lamp is lit and diagnosis code is displayed on third establishment of code generation condition.)

[Diagnosis check timing]
- Fault diagnosis is continuously performed during the driving cycle.

[Diagnostic requirement]
- Fault diagnosis starts when one of the following requirements are met (The diagnosis does not start when both requirements are simultaneously met.).
  - Engine speed: less than 500 rpm
  - Fuel injection quantity: below 5 mg/cyc

[Control effected by electronic control unit during fault]
- Exhaust gas recirculation control is stopped.
- Throttle controls disabled
- Particulate matter deposit computation is stopped.
- Turbocharger actuator test is inhibited.
- Related fault check is stopped.

[Probable cause of trouble]
- Open-circuit or short-circuit of harness between electronic control unit and sensor
- Malfunction of each connector
- Malfunction of sensor
- Malfunction of electronic control unit

[Recoverability]
- Recovered if signal becomes normal with starter switch in ON position.
  (Warning lamp is extinguished and diagnosis code is cleared at fourth display of diagnosis code after recovery.)

[Electronic Control Unit Connection Diagram]

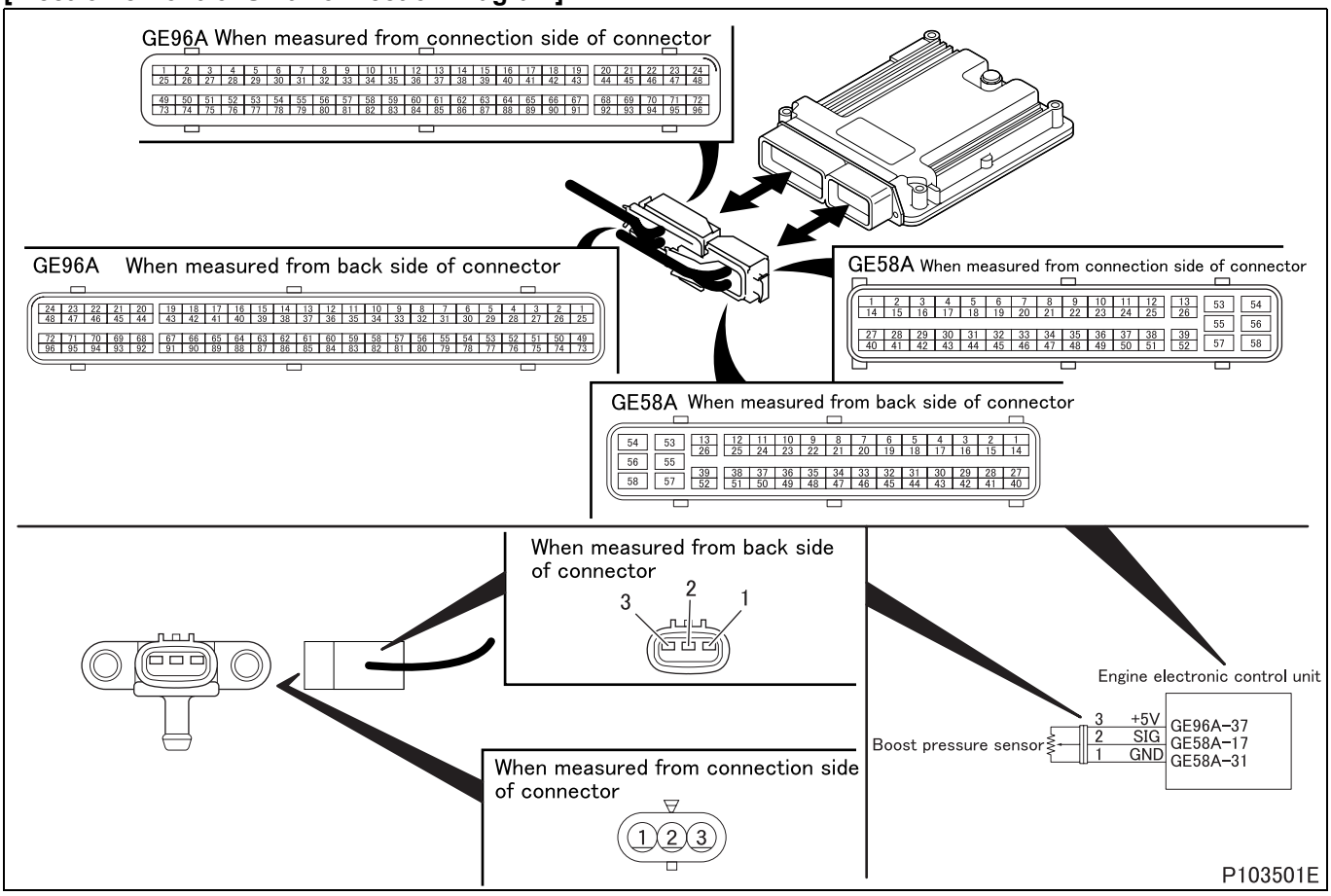

[Parts Identification and Location]

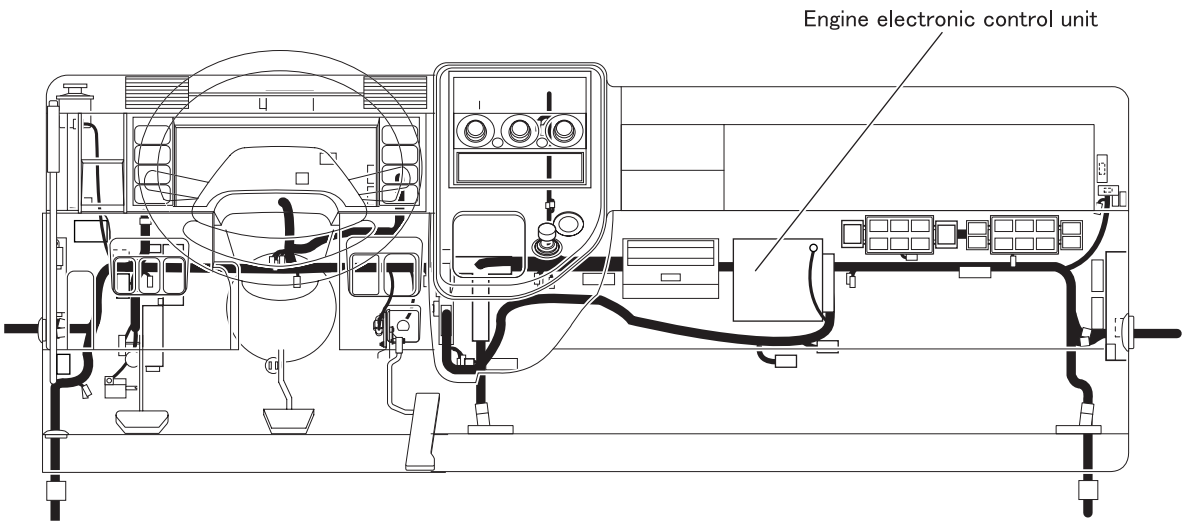

Left side view of engine

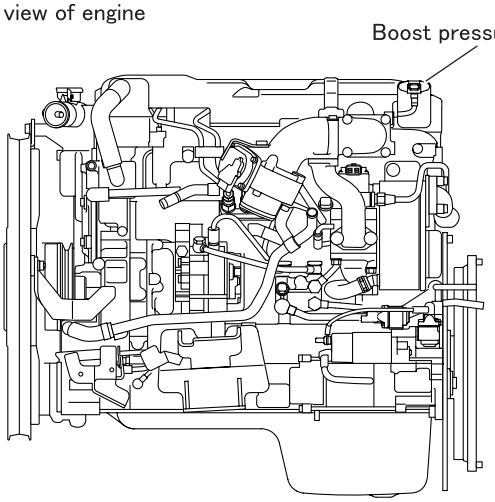

P103628E

[Fault diagnosis]

- Perform checks in the sequence of the following steps.

Step 1	Inspection items		Inspection by control data
	Maintenance item		**<General Scanning Tool used>** • Measure item “Intake MAP”. **<Multi-Use Tester used>** • Measure item No. 21 “Boost Pressure” of Service Data.
	Inspection condition		Starter switch ON (engine stationary) → After engine has started, press accelerator pedal.
	Requirements		Coincides with atmospheric pressure → Gradually increases
	Inspection result (Is the judging standard satisfied?)	YES	Go to transient fault (See Gr00.).
		NO	Go to step 2.

Step 2	Inspection items		Inspection by electronic control unit connector (signal)
	Maintenance item		Measure value of voltage between connector (GE96A) terminal No. 34 (+) and 14 (–).
	Inspection condition		• Measure from back side of connector of harness with each device connected to harness. • Engine started
	Requirements		0.5 to 4.5 V
	Inspection result (Is the judging standard satisfied?)	YES	Go to step 5.
		NO	Go to step 3.

Step 3	Inspection items		Inspection by electronic control unit connector (power supply)
	Maintenance item		Measure value of voltage between connector (GE96A) terminal No. 37 (+) and 14 (–).
	Inspection condition		• Measure from back side of connector of harness with each device connected to harness. • Starter switch: ON
	Requirements		5 V
	Inspection result (Is the judging standard satisfied?)	YES	Go to step 4.
		NO	Go to step 5.

Step 4	Inspection items		Inspection by electronic control unit connector (ground)
	Maintenance item		Measure value of voltage between connector (GE96A) terminal No. 14 (+) and (GE58A) terminal No. 53 (–).
	Inspection condition		• Measure from back side of connector of harness with each device connected to harness. • Starter switch: ON
	Requirements		0 V
	Inspection result (Is the judging standard satisfied?)	YES	Go to step 6.
		NO	Go to step 5.

Step 5	Inspection items		Inspection of electronic control unit connector
	Maintenance item		Inspection of connector
	Inspection condition		–
	Requirements		• Connector is properly connected. • No trace of water entry is found. • No corrosion is found in terminal. • Connection to terminal is appropriate.
	Inspection result (Is the judging standard satisfied?)	YES	Go to step 12.
		NO	Modify connector.

Step 6	Inspection items		Inspection of sensor connector
	Maintenance item		Inspection of connector
	Inspection condition		–
	Requirements		• Connector is properly connected. • No trace of water entry is found. • No corrosion is found in terminal. • Connection to terminal is appropriate.
	Inspection result (Is the judging standard satisfied?)	YES	Go to step 7.
		NO	Modify connector.

Step 7	Inspection items		Inspection of sensor unit
	Maintenance item		Measure voltage developing across connector terminal No. 2 (+) and 1 (–) when air pressure (gauge pressure) is gradually applied.
	Inspection condition		Apply voltage DC 5 V across connector terminals No. 3 (+) and 1 (–).
	Requirements		• 99 kPa {14 psi, 1.0 kgf/cm^2}: Approx. 2.5 V • 232.3 kPa {34 psi, 2.4 kgf/cm^2}: Approx. 4.5 V
	Inspection result (Is the judging standard satisfied?)	YES	Go to step 8.
		NO	Replacement of sensor

<Step 7 inspection diagram>

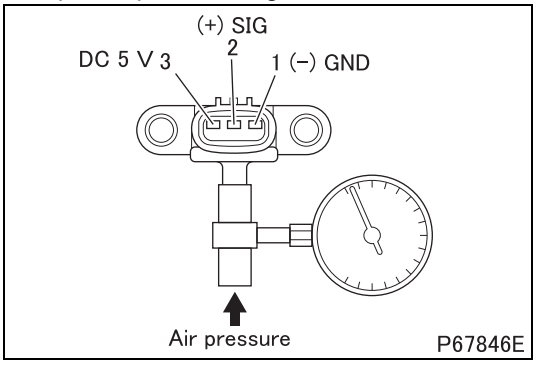

Step 8	Inspection items		Inspection of harness between electronic control unit and sensor (power supply)
	Maintenance item		Measure value of voltage between connector terminal No. 3 (+) and 1 (–).
	Inspection condition		• Measure from back side of connector of harness with each device connected to harness. • Starter switch: ON
	Requirements		5 V
	Inspection result (Is the judging standard satisfied?)	YES	Go to step 10.
		NO	Go to step 9.

Step 9	Inspection items		Inspection of harness between electronic control unit and sensor (power supply)
	Maintenance item		Check circuit between sensor connector terminal No. 3 and electronic control unit connector (GE96A) terminal No. 37.
	Inspection condition		Disconnect each device from harness and measure from connection side of harness connector.
	Requirements		There is continuity.
	Inspection result (Is the judging standard satisfied?)	YES	Go to step 12.
		NO	Modify harness.

Step 10	Inspection items		Inspection of harness between electronic control unit and sensor (ground)
	Maintenance item		Check circuit between sensor connector terminal No. 1 and electronic control unit connector (GE96A) terminal No. 14.
	Inspection condition		Disconnect each device from harness and measure from connection side of harness connector.
	Requirements		There is continuity.
	Inspection result (Is the judging standard satisfied?)	YES	Go to step 11.
		NO	Modify harness.

Step 11	Inspection items		Inspection of harness between electronic control unit and sensor (signal)
	Maintenance item		Check circuit between sensor connector terminal No. 2 and electronic control unit connector (GE96A) terminal No. 34.
	Inspection condition		Disconnect each device from harness and measure from connection side of harness connector.
	Requirements		There is continuity.
	Inspection result (Is the judging standard satisfied?)	YES	Go to step 12.
		NO	Modify harness.

Step 12	Inspection items		Inspection by control data
	Maintenance item		**<General Scanning Tool used>** • Measure item “Intake MAP”. **<Multi-Use Tester used>** • Measure item No. 21 “Boost Pressure” of Service Data.
	Inspection condition		Starter switch ON (engine stationary) → After engine has started, press accelerator pedal.
	Requirements		Coincides with atmospheric pressure → Gradually increases
	Inspection result (Is the judging standard satisfied?)	YES	Go to transient fault (See Gr00.).
		NO	Replacement of electronic control unit

[Fault code]
Diagnosis code: P0238/Flash code: 32
[Monitor]
Failure of boost pressure sensor
[Fault (outline)]
High signal range check
[Diagnosis check]
- Boost sensor output voltage is monitored.

[Code generation condition]
- Boost sensor output voltage remains over 4.87 V for 1 second. (sensor pressure: 3533 mbar {51.23 psi} or more)
  (Warning lamp is lit and diagnosis code is displayed on third establishment of code generation condition.)

[Diagnosis check timing]
- Fault diagnosis is continuously performed during the driving cycle.

[Diagnostic requirement]
–

[Control effected by electronic control unit during fault]
- Exhaust gas recirculation control is stopped.
- Throttle controls disabled
- Particulate matter deposit computation is stopped.
- Turbocharger actuator test is inhibited.
- Related fault check is stopped.

[Probable cause of trouble]
- Open-circuit or short-circuit of harness between electronic control unit and sensor
- Malfunction of each connector
- Malfunction of sensor
- Malfunction of electronic control unit

[Recoverability]
- Recovered if signal becomes normal with starter switch in ON position.
  (Warning lamp is extinguished and diagnosis code is cleared at fourth display of diagnosis code after recovery.)

[Electronic Control Unit Connection Diagram]

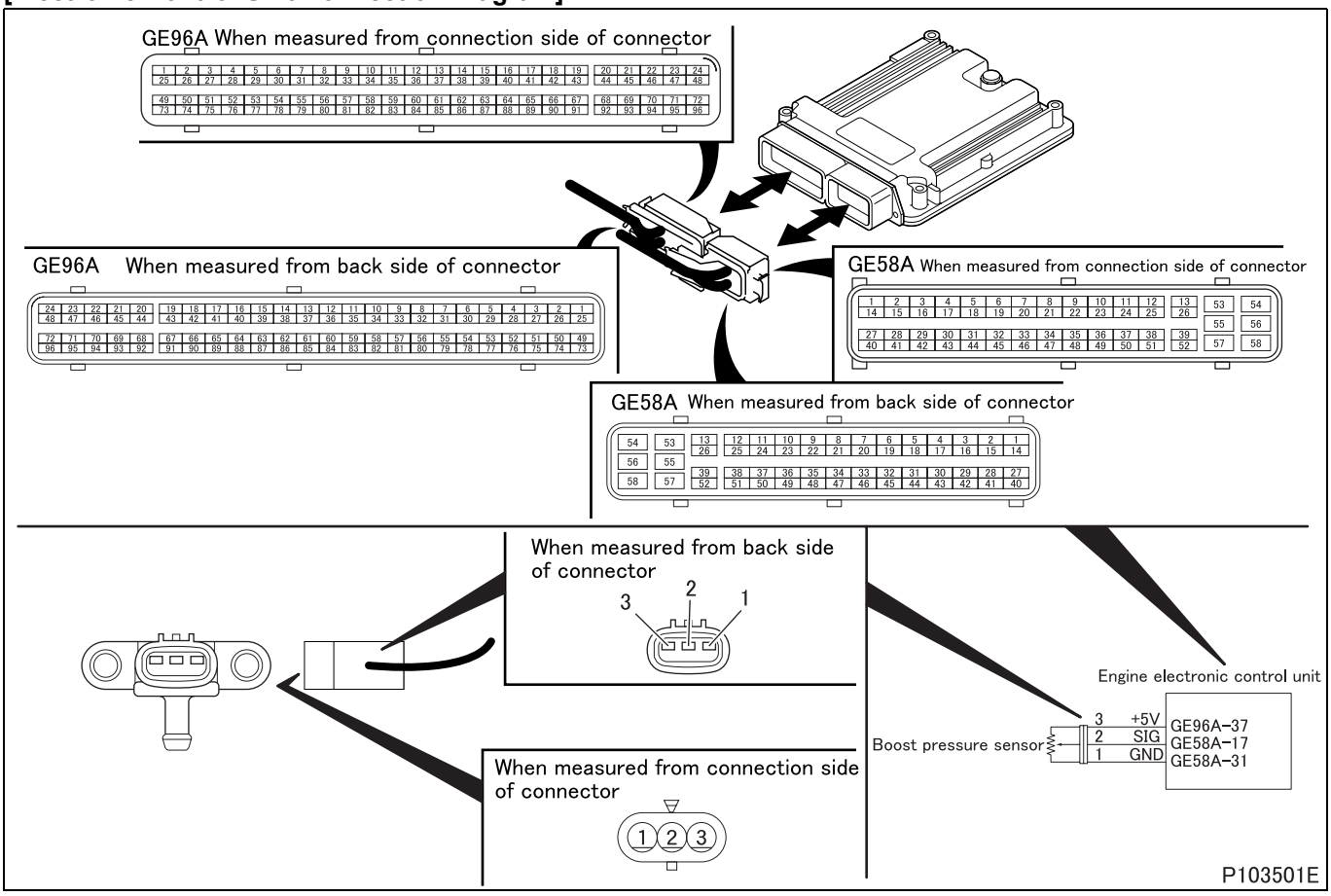

[Parts Identification and Location]

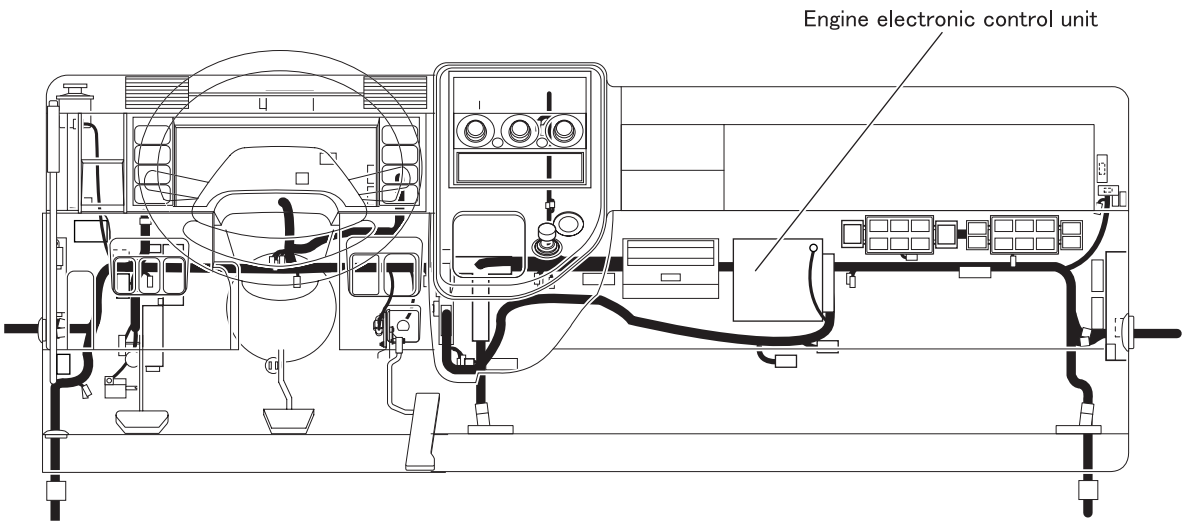

Left side view of engine

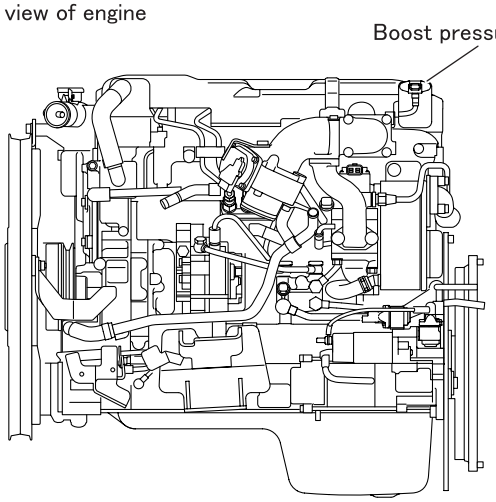

P103628E

[Fault diagnosis]

- Perform checks in the sequence of the following steps.

Step 1	Inspection items		Inspection by control data
	Maintenance item		**<General Scanning Tool used>** • Measure item “Intake MAP”. **<Multi-Use Tester used>** • Measure item No. 21 “Boost Pressure” of Service Data.
	Inspection condition		Starter switch ON (engine stationary) → After engine has started, press accelerator pedal.
	Requirements		Coincides with atmospheric pressure → Gradually increases
	Inspection result (Is the judging standard satisfied?)	YES	Go to transient fault (See Gr00.).
		NO	Go to step 2.

Step 2	Inspection items		Inspection by electronic control unit connector (signal)
	Maintenance item		Measure value of voltage between connector (GE96A) terminal No. 34 (+) and 14 (–).
	Inspection condition		• Measure from back side of connector of harness with each device connected to harness. • Engine started
	Requirements		0.5 to 4.5 V
	Inspection result (Is the judging standard satisfied?)	YES	Go to step 5.
		NO	Go to step 3.

Step 3	Inspection items		Inspection by electronic control unit connector (power supply)
	Maintenance item		Measure value of voltage between connector (GE96A) terminal No. 37 (+) and 14 (–).
	Inspection condition		• Measure from back side of connector of harness with each device connected to harness. • Starter switch: ON
	Requirements		5 V
	Inspection result (Is the judging standard satisfied?)	YES	Go to step 4.
		NO	Go to step 5.

Step 4	Inspection items		Inspection by electronic control unit connector (ground)
	Maintenance item		Measure value of voltage between connector (GE96A) terminal No. 14 (+) and (GE58A) terminal No. 53 (–).
	Inspection condition		• Measure from back side of connector of harness with each device connected to harness. • Starter switch: ON
	Requirements		0 V
	Inspection result (Is the judging standard satisfied?)	YES	Go to step 6.
		NO	Go to step 5.

Step 5	Inspection items		Inspection of electronic control unit connector
	Maintenance item		Inspection of connector
	Inspection condition		–
	Requirements		• Connector is properly connected. • No trace of water entry is found. • No corrosion is found in terminal. • Connection to terminal is appropriate.
	Inspection result (Is the judging standard satisfied?)	YES	Go to step 12.
		NO	Modify connector.

Step 6	Inspection items		Inspection of sensor connector
	Maintenance item		Inspection of connector
	Inspection condition		–
	Requirements		• Connector is properly connected. • No trace of water entry is found. • No corrosion is found in terminal. • Connection to terminal is appropriate.
	Inspection result (Is the judging standard satisfied?)	YES	Go to step 7.
		NO	Modify connector.

Step 7	Inspection items		Inspection of sensor unit
	Maintenance item		Measure voltage developing across connector terminal No. 2 (+) and 1 (–) when air pressure (gauge pressure) is gradually applied.
	Inspection condition		Apply voltage DC 5 V across connector terminals No. 3 (+) and 1 (–).
	Requirements		• 99 kPa {14 psi, 1.0 kgf/cm^2}: Approx. 2.5 V • 232.3 kPa {34 psi, 2.4 kgf/cm^2}: Approx. 4.5 V
	Inspection result (Is the judging standard satisfied?)	YES	Go to step 8.
		NO	Replacement of sensor

<Step 7 inspection diagram>

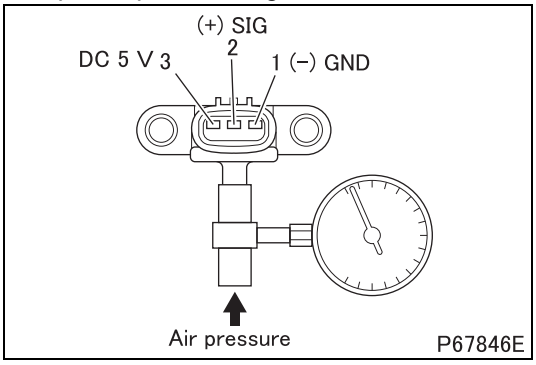

Step 8	Inspection items		Inspection of harness between electronic control unit and sensor (power supply)
	Maintenance item		Measure value of voltage between connector terminal No. 3 (+) and 1 (–).
	Inspection condition		• Measure from back side of connector of harness with each device connected to harness. • Starter switch: ON
	Requirements		5 V
	Inspection result (Is the judging standard satisfied?)	YES	Go to step 10.
		NO	Go to step 9.

Step 9	Inspection items		Inspection of harness between electronic control unit and sensor (power supply)
	Maintenance item		Check circuit between sensor connector terminal No. 3 and electronic control unit connector (GE96A) terminal No. 37.
	Inspection condition		Disconnect each device from harness and measure from connection side of harness connector.
	Requirements		There is continuity.
	Inspection result (Is the judging standard satisfied?)	YES	Go to step 12.
		NO	Modify harness.

Step 10	Inspection items		Inspection of harness between electronic control unit and sensor (ground)
	Maintenance item		Check circuit between sensor connector terminal No. 1 and electronic control unit connector (GE96A) terminal No. 14.
	Inspection condition		Disconnect each device from harness and measure from connection side of harness connector.
	Requirements		There is continuity.
	Inspection result (Is the judging standard satisfied?)	YES	Go to step 11.
		NO	Modify harness.

Step 11	Inspection items		Inspection of harness between electronic control unit and sensor (signal)
	Maintenance item		Check circuit between sensor connector terminal No. 2 and electronic control unit connector (GE96A) terminal No. 34.
	Inspection condition		Disconnect each device from harness and measure from connection side of harness connector.
	Requirements		There is continuity.
	Inspection result (Is the judging standard satisfied?)	YES	Go to step 12.
		NO	Modify harness.

Step 12	Inspection items		Inspection by control data
	Maintenance item		**<General Scanning Tool used>** • Measure item “Intake MAP”. **<Multi-Use Tester used>** • Measure item No. 21 “Boost Pressure” of Service Data.
	Inspection condition		Starter switch ON (engine stationary) → After engine has started, press accelerator pedal.
	Requirements		Coincides with atmospheric pressure → Gradually increases
	Inspection result (Is the judging standard satisfied?)	YES	Go to transient fault (See Gr00.).
		NO	Replacement of electronic control unit

[Fault code]
Diagnosis code: P0251/Flash code: 36
[Monitor]
Valve opening of common rail safety valve (DBV)
[Fault (outline)]
Common rail pressure (maximum)
[Diagnosis check]
- Safety valve (DBV) was activated after abnormal rise in common rail pressure.

[Code generation condition]
- Common rail pressure exceeded 190 MPa {27560 psi, 1937 kgf/cm^2} once, then dropped and stabilized at a level near a safety valve (DBV) operating pressure of 80 MPa {11604 psi, 816 kgf/cm^2}.
  (Warning lamp is lit and diagnosis code is displayed on first establishment of code generation condition.)

[Diagnosis check timing]
- Fault diagnosis is performed only once during the driving cycle.

[Diagnostic requirement]
–

[Control effected by electronic control unit during fault]
- Engine torque is limited.
- Exhaust gas recirculation control is stopped.
- Throttle controls disabled
- Diesel particulate filter regeneration is stopped.

[Probable cause of trouble]
- Airtight malfunction of injector
- Malfunction of supply pump
- Plugged fuel system
- Malfunction of pressure limiter
- Malfunction of common rail pressure sensor

[Recoverability]
- Recovered if signal becomes normal when starter switch is turned OFF to ON (power supply resumed to electronic control unit).
  (At the same time as recovery, warning lamp is extinguished and diagnosis code is cleared.)

[Fault diagnosis]

- Perform checks in the sequence of the following steps.

Step 1	Inspection items		Inspection by control data
	Maintenance item		Check if following diagnosis codes occur simultaneously. • P0192 “CRS Pressure SNSR (Low)” • P0193 “CRS Pressure SNSR (High)” • P0201 “Injector M/V-Cylinder 1 (Load)” • P0202 “Injector M/V-Cylinder 2 (Load)” • P0203 “Injector M/V-Cylinder 3 (Load)” • P0204 “Injector M/V-Cylinder 4 (Load)” • P0253 “Common Rail Pressure Defect” • P0605 “ECU System (Hardware)” • P0607 “ECU System”
	Inspection condition		• Starter switch: ON • Engine: stopped
	Requirements		Codes occur.
	Inspection result (Is the judging standard satisfied?)	YES	Inspect diagnosis code that is occurring.
		NO	Go to step 2.

Step 2	Inspection items		Checking of engine appearance
	Maintenance item		Check fuel system for fuel leak.
	Inspection condition		Starter switch: OFF
	Requirements		There is fuel leak.
	Inspection result (Is the judging standard satisfied?)	YES	Go to step 3.
		NO	Go to step 6.

Step 3	Inspection items		Inspection of low pressure piping (fuel tank – supply pump)
	Maintenance item		Check suction pipe or hose for bend.
	Inspection condition		Starter switch: OFF
	Requirements		There is no bend on hose.
	Inspection result (Is the judging standard satisfied?)	YES	Go to step 4.
		NO	Correct and replace suction pipe or hose.

Step 4	Inspection items		Checking of air bleeding
	Maintenance item		Bleed air from fuel filter.
	Inspection condition		Starter switch: OFF
	Requirements		Problem is solved by bleeding air.
	Inspection result (Is the judging standard satisfied?)	YES	End of inspection
		NO	Go to step 5.

Step 5	Inspection items		Inspection of low pressure piping
	Maintenance item		Fuel filter
	Inspection condition		Starter switch: OFF
	Requirements		Problem is solved by replacing fuel filter.
	Inspection result (Is the judging standard satisfied?)	YES	End of inspection
		NO	Go to step 6.

Step 6	Inspection items		Inspection by control data
	Maintenance item		Perform actuator test item No. B2 “Fuel Leak Check”
	Inspection condition		Rail pressure is increased for a certain period of time (6 seconds). • Vehicle: stationary (vehicle speed 0 km/h {0 MPH}) • Transmission: neutral • Diagnosis switch: OFF (fuse removed)
	Requirements		There is no leak from supply pump.
	Inspection result (Is the judging standard satisfied?)	YES	Go to step 7.
		NO	Replacement of supply pump

Step 7	Inspection items		Inspection by control data
	Maintenance item		Perform actuator test item No. B2 “Fuel Leak Check”
	Inspection condition		Rail pressure is increased for a certain period of time (6 seconds). • Vehicle: stationary (vehicle speed 0 km/h {0 MPH}) • Transmission: neutral • Diagnosis switch: OFF (fuse removed)
	Requirements		There is no leak from fuel pipe between supply pump and rail.
	Inspection result (Is the judging standard satisfied?)	YES	Go to step 8.
		NO	Replacement of fuel pipe

Step 8	Inspection items		Inspection by control data
	Maintenance item		Perform actuator test item No. B2 “Fuel Leak Check”
	Inspection condition		Rail pressure is increased for a certain period of time (6 seconds). • Vehicle: stationary (vehicle speed 0 km/h {0 MPH}) • Transmission: neutral • Diagnosis switch: OFF (fuse removed)
	Requirements		There is no leak from rail.
	Inspection result (Is the judging standard satisfied?)	YES	Go to step 9.
		NO	Replacement of rail

Step 9	Inspection items		Inspection by control data
	Maintenance item		Perform actuator test item No. B2 “Fuel Leak Check”
	Inspection condition		Rail pressure is increased for a certain period of time (6 seconds). • Vehicle: stationary (vehicle speed 0 km/h {0 MPH}) • Transmission: neutral • Diagnosis switch: OFF (fuse removed)
	Requirements		There is no leak from fuel injection pipes (four) between injector and rail.
	Inspection result (Is the judging standard satisfied?)	YES	Go to step 10.
		NO	Replacement of injection pipe

Step 10	Inspection items		Inspection by control data
	Maintenance item		Perform actuator test item No. B2 “Fuel Leak Check”
	Inspection condition		Rail pressure is increased for a certain period of time (6 seconds). • Vehicle: stationary (vehicle speed 0 km/h {0 MPH}) • Transmission: neutral • Diagnosis switch: OFF (fuse removed)
	Requirements		There is no leak from injectors (four).
	Inspection result (Is the judging standard satisfied?)	YES	Go to step 11.
		NO	Replacement of injector

Step 11	Inspection items		Check inside of combustion chamber.
	Maintenance item		Check for fuel leak.
	Inspection condition		• After performing actuator test item No. B2 “Fuel Leak Check”, stop engine. • Remove glow plug, and check from glow plug mounting hole using bore scope.
	Requirements		Inside of combustion chamber is not wet.
	Inspection result (Is the judging standard satisfied?)	YES	Go to step 12.
		NO	Replacement of injector of object cylinder

Step 12	Inspection items		Replacement of rail (flow damper and pressure limiter abnormal)
	Maintenance item		–
	Inspection condition		–
	Requirements		Problem is solved by replacing rail.
	Inspection result (Is the judging standard satisfied?)	YES	Go to step 13.
		NO	–

Step 13	Inspection items		Replacement of supply pump
	Maintenance item		–
	Inspection condition		–
	Requirements		Problem is solved by replacing supply pump.
	Inspection result (Is the judging standard satisfied?)	YES	–
		NO	Replacement of injectors (four)

[Fault code]
Diagnosis code: P0253/Flash code: 22
[Monitor]
Rail pressure is abnormal (to low) during opening of safety valve (DBV).
[Fault (outline)]
Common rail pressure (minimum)
[Diagnosis check]
- Safety valve (DBV) is monitored for abnormal drop in operating pressure during opening of DBV (diagnosis code P0251).

[Code generation condition]
- Common rail pressure remains below 50 MPa {7253 psi, 510 kgf/cm^2} for 100 consecutive seconds. (Warning lamp is lit and diagnosis code is displayed on first establishment of code generation condition.)

[Diagnosis check timing]
- Fault diagnosis is performed each time when the limp mode control is activated.

[Diagnostic requirement]
- After diagnosis code P0191, P0192, P0193 occurs.

[Control effected by electronic control unit during fault]
- Engine stopped

[Probable cause of trouble]
- Malfunction of safety valve (DBV)

[Recoverability]
- Recovered if signal becomes normal with starter switch in ON position.
  (At the same time as recovery, warning lamp is extinguished and diagnosis code is cleared.)

[Fault diagnosis]
- Perform checks in the sequence of the following steps.

Step 1	Inspection items		Inspection by control data
	Maintenance item		Check if following diagnosis codes occur simultaneously. • P0251 “Common Rail Pressure Defect”
	Inspection condition		• Starter switch: ON • Engine: stopped
	Requirements		Codes occur.
	Inspection result (Is the judging standard satisfied?)	YES	Inspect diagnosis code that is occurring.
		NO	Replacement of rail

[Fault code]
Diagnosis code: P0254/Flash code: 23
[Monitor]
Rail pressure is abnormal (to high) during opening of safety valve (DBV).
[Fault (outline)]
- Pressure shock
- Not open
- Common rail pressure (maximum)

[Diagnosis check]
- Safety valve (DBV) is monitored for abnormal drop in operating pressure during opening of DBV (diagnosis code P0251).

[Code generation condition]
Diagnosis code is generated under either of the following conditions.
<Condition (1)>
- Actual common rail pressure remains over 195 MPa {28286 psi, 1988 kgf/cm^2} for 2 consecutive seconds. (Diagnosis code is displayed on first establishment of code generation condition.)

<Condition (2)>
- Actual common rail pressure remains over 195 MPa {28286 psi, 1988 kgf/cm^2} for 10 consecutive seconds. (Warning lamp (red) is lit and diagnosis code is displayed on first establishment of code generation condition.)

<Condition (3)>
- Common rail pressure remains at 126 MPa {18277 psi, 1285 kgf/cm^2} or higher for 100 consecutive seconds. (Warning lamp (red) is lit and diagnosis code is displayed on first establishment of code generation condition.)

[Diagnosis check timing]
<Condition (1), (2)>
- Fault diagnosis is performed only once during the driving cycle.

<Condition (3)>
- Fault diagnosis is performed each time when the limp mode control is activated.

[Diagnostic requirement]
<When common rail pressure exceeds 195 MPa {28286 psi, 1988 kgf/cm^2}>
–
<When common rail pressure exceeds 126 MPa {18277 psi, 1285 kgf/cm^2}>
- After diagnosis code P0191, P0192, P0193 occurs.

[Control effected by electronic control unit during fault]
Electronic control unit varies in the way of control by the status of warning lamp.
<Warning lamp (red) lit>
- Engine stopped

<Warning lamp extinguished (diagnosis code only)>
- Diesel particulate filter regeneration is stopped.

[Probable cause of trouble]
- Malfunction of safety valve (DBV)

[Recoverability]
- Recovered if signal becomes normal when starter switch is turned OFF to ON (power supply resumed to electronic control unit).
  (Timing of warning lamp/diagnosis code OFF depends on condition.)

<Condition (1)>
- Diagnosis code is cleared simultaneously with recovery.

<Condition (2)>
- Lamp is extinguished and code is cleared simultaneously with recovery.

<Condition (3)>
- Lamp is extinguished and code is cleared simultaneously with recovery.

[Fault diagnosis]

- Perform checks in the sequence of the following steps.

Step 1	Inspection items		Inspection by control data
	Maintenance item		Check if following diagnosis codes occur simultaneously. • P0251 “Common Rail Pressure Defect”
	Inspection condition		• Starter switch: ON • Engine: stopped
	Requirements		Codes occur.
	Inspection result (Is the judging standard satisfied?)	YES	Inspect diagnosis code that is occurring.
		NO	Replacement of rail

[Fault code]
Diagnosis code: P0261/Flash code: 37
[Monitor]
Failure of injector magnetic valve (No. 1 cylinder)
[Fault (outline)]
Injector short circuit (No. 1 cylinder)
[Diagnosis check]
- Injector magnetic valve (No. 1 cylinder) circuit is monitored for fault.

[Code generation condition]
- Injector magnetic valve (No. 1 cylinder) circuit remains shorted to ground as detected for 3 consecutive cycles. (Warning lamp is lit and diagnosis code is displayed on first establishment of code generation condition.)

[Diagnosis check timing]
- Fault diagnosis is continuously performed during the driving cycle.

[Diagnostic requirement]
–

[Control effected by electronic control unit during fault]
- Injector magnetic valve (No. 1 and No. 4 cylinder) is stopped.
- Exhaust gas recirculation control is stopped.
- Throttle controls disabled
- Misfire detection is stopped.
- Auto cruise control stopped
- Diesel particulate filter regeneration is stopped.
- Turbocharger actuator test is inhibited.
- Related fault check is stopped.

[Probable cause of trouble]
- Open-circuit or short-circuit of harness between electronic control unit and injector magnetic valve
- Malfunction of each connector
- Malfunction of injector magnetic valve
- Malfunction of electronic control unit

[Recoverability]
- Recovered if signal becomes normal when starter switch is turned OFF to ON (power supply resumed to electronic control unit).
  (Warning lamp is extinguished and diagnosis code is cleared at fourth display of diagnosis code after recovery.)

[Electronic Control Unit Connection Diagram]

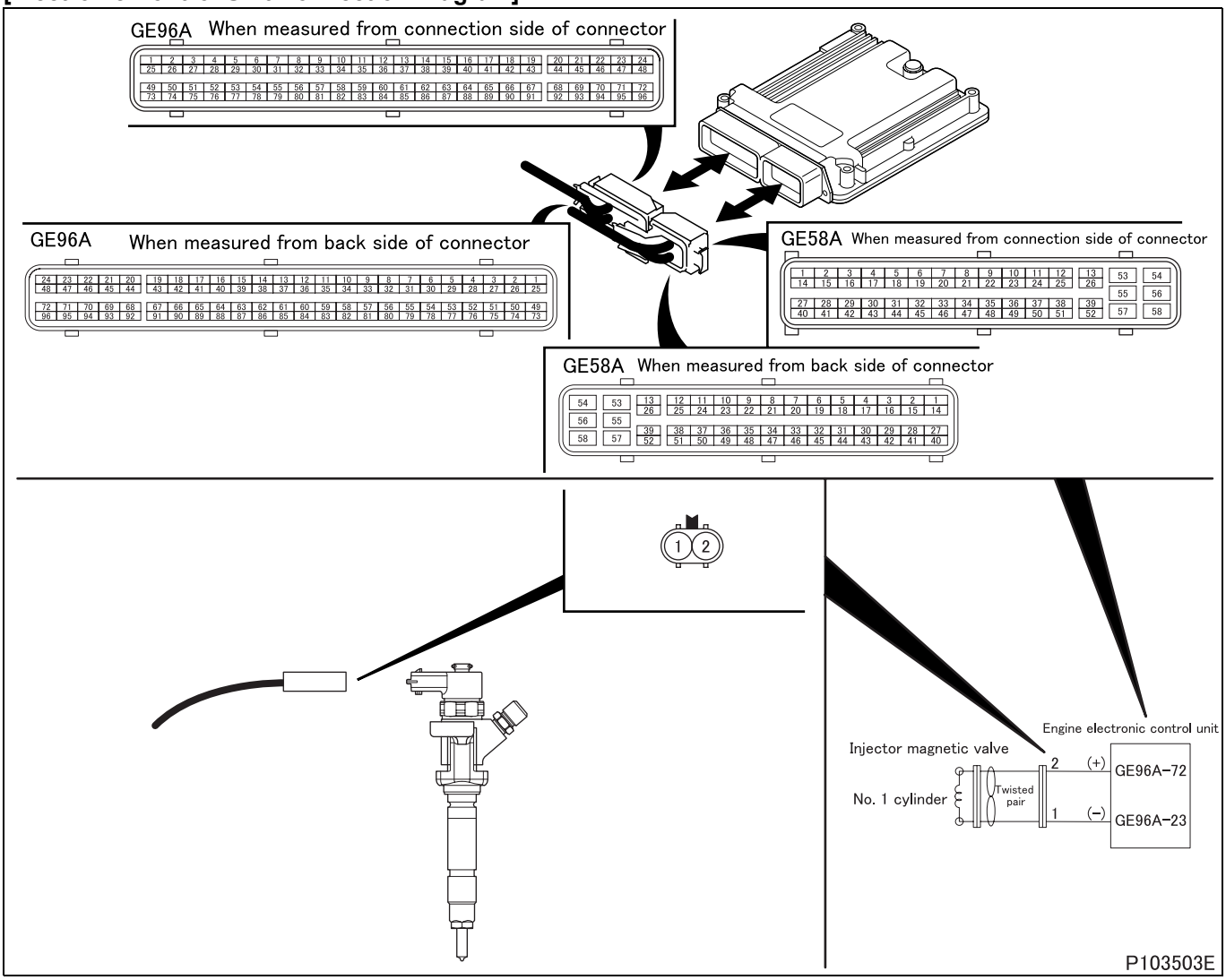

[Parts Identification and Location]

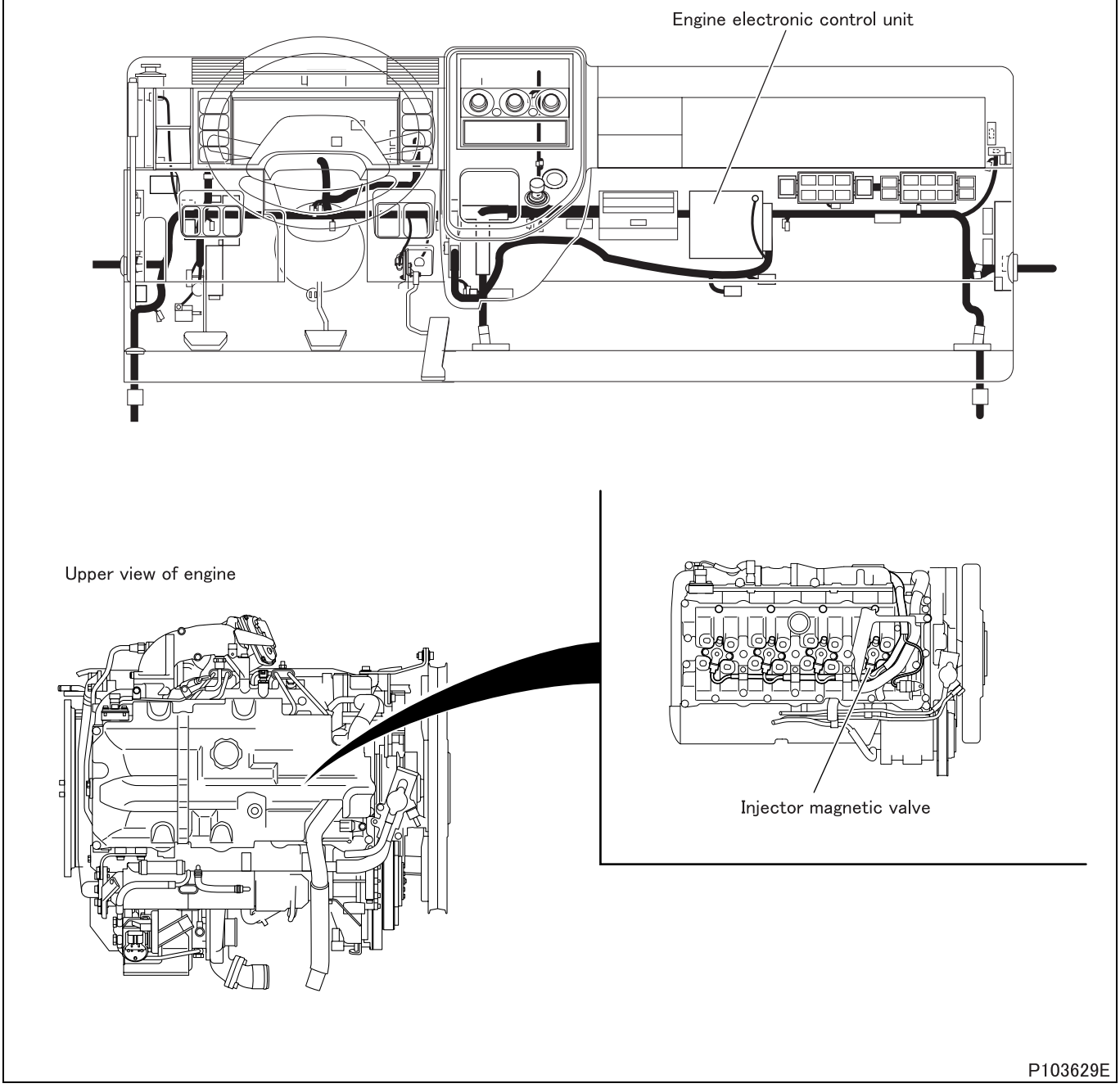

[Fault diagnosis]

- Perform checks in the sequence of the following steps.

Step 1	Inspection items		Inspection by control data
	Maintenance item		Perform actuator test item No. BB “Injector Test 1”
	Inspection condition		• Vehicle: stationary (vehicle speed 0 km/h {0 MPH}) • Engine speed: 1500 rpm or less • Transmission: neutral • The current diagnosis code does not occur.
	Requirements		Injector (No. 1 cylinder) stops injection and engine vibrations become slightly larger.
	Inspection result (Is the judging standard satisfied?)	YES	Go to transient fault (See Gr00.).
		NO	Go to step 2.

Step 2	Inspection items		Inspection by electronic drive unit connector
	Maintenance item		Measure value of resistance between connector (GE96A) terminal No. 23 and 72.
	Inspection condition		Disconnect electronic control unit from harness and measure from connection side of harness connector.
	Requirements		0.255 ± 0.04 Ω (20°C {68°F})
	Inspection result (Is the judging standard satisfied?)	YES	Go to step 3.
		NO	Go to step 4.

Step 3	Inspection items		Inspection of electronic control unit connector
	Maintenance item		Inspection of connector
	Inspection condition		–
	Requirements		• Connector is properly connected. • No trace of water entry is found. • No corrosion is found in terminal. • Connection to terminal is appropriate.
	Inspection result (Is the judging standard satisfied?)	YES	Go to step 8.
		NO	Modify connector.

Step 4	Inspection items		Inspection of injector magnetic valve connector
	Maintenance item		Inspection of connector
	Inspection condition		–
	Requirements		• Connector is properly connected. • Connection to terminal is appropriate.
	Inspection result (Is the judging standard satisfied?)	YES	Go to step 5.
		NO	Modify connector.

Step 5	Inspection items		Inspection of injector magnetic valve unit
	Maintenance item		Measure value of resistance between connector terminal No. 1 and 2.
	Inspection condition		–
	Requirements		0.255 ± 0.04 Ω (20°C {68°F})
	Inspection result (Is the judging standard satisfied?)	YES	Go to step 6.
		NO	Replacement of injector

<Step 5 inspection diagram>

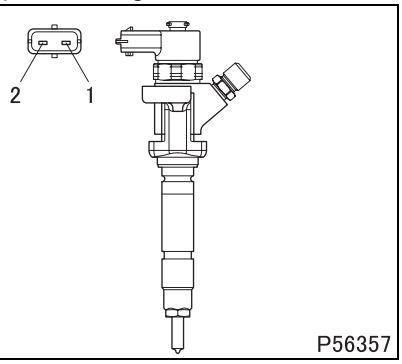

Step 6	Inspection items		Inspection of harness between injector magnetic valve and electronic control unit (power supply)
	Maintenance item		Check circuit between injector magnetic valve connector terminal No. 2 and electronic control unit connector (GE96A) terminal No. 72.
	Inspection condition		Disconnect each device from harness and measure from connection side of harness connector.
	Requirements		There is continuity.
	Inspection result (Is the judging standard satisfied?)	YES	Go to step 7.
		NO	Modify harness.

Step 7	Inspection items		Inspection of harness between injector magnetic valve and electronic control unit (ground)
	Maintenance item		Check circuit between injector magnetic valve connector terminal No. 1 and electronic control unit connector (GE96A) terminal No. 23.
	Inspection condition		Disconnect each device from harness and measure from connection side of harness connector.
	Requirements		There is continuity.
	Inspection result (Is the judging standard satisfied?)	YES	Go to step 8.
		NO	Modify harness.

Step 8	Inspection items		Inspection by control data
	Maintenance item		Perform actuator test item No. BB “Injector Test 1”
	Inspection condition		• Vehicle: stationary (vehicle speed 0 km/h {0 MPH}) • Engine speed: 1500 rpm or less • Transmission: neutral • The current diagnosis code does not occur.
	Requirements		Injector (No. 1 cylinder) stops injection and engine vibrations become slightly larger.
	Inspection result (Is the judging standard satisfied?)	YES	Go to transient fault (See Gr00.).
		NO	Replacement of electronic control unit

[Fault code]
Diagnosis code: P0262/Flash code: 37
[Monitor]
Failure of injector magnetic valve (No. 1 cylinder)
[Fault (outline)]
Injector short circuit (No. 1 cylinder)
[Diagnosis check]
- Injector magnetic valve (No. 1 cylinder) circuit is monitored for fault.

[Code generation condition]
- Injector magnetic valve (No. 1 cylinder) circuit remains shorted to power supply as detected for 3 consecutive cycles. (Warning lamp is lit and diagnosis code is displayed on first establishment of code generation condition.)

[Diagnosis check timing]
- Fault diagnosis is continuously performed during the driving cycle.

[Diagnostic requirement]
–

[Control effected by electronic control unit during fault]
- Injector magnetic valve (No. 1 and No. 4 cylinder) is stopped.
- Exhaust gas recirculation control is stopped.
- Throttle controls disabled
- Misfire detection is stopped.
- Auto cruise control stopped
- Diesel particulate filter regeneration is stopped.
- Turbocharger actuator test is inhibited.
- Related fault check is stopped.

[Probable cause of trouble]
- Open-circuit or short-circuit of harness between electronic control unit and injector magnetic valve
- Malfunction of each connector
- Malfunction of injector magnetic valve
- Malfunction of electronic control unit

[Recoverability]
- Recovered if signal becomes normal when starter switch is turned OFF to ON (power supply resumed to electronic control unit).
  (Warning lamp is extinguished and diagnosis code is cleared at fourth display of diagnosis code after recovery.)

[Electronic Control Unit Connection Diagram]

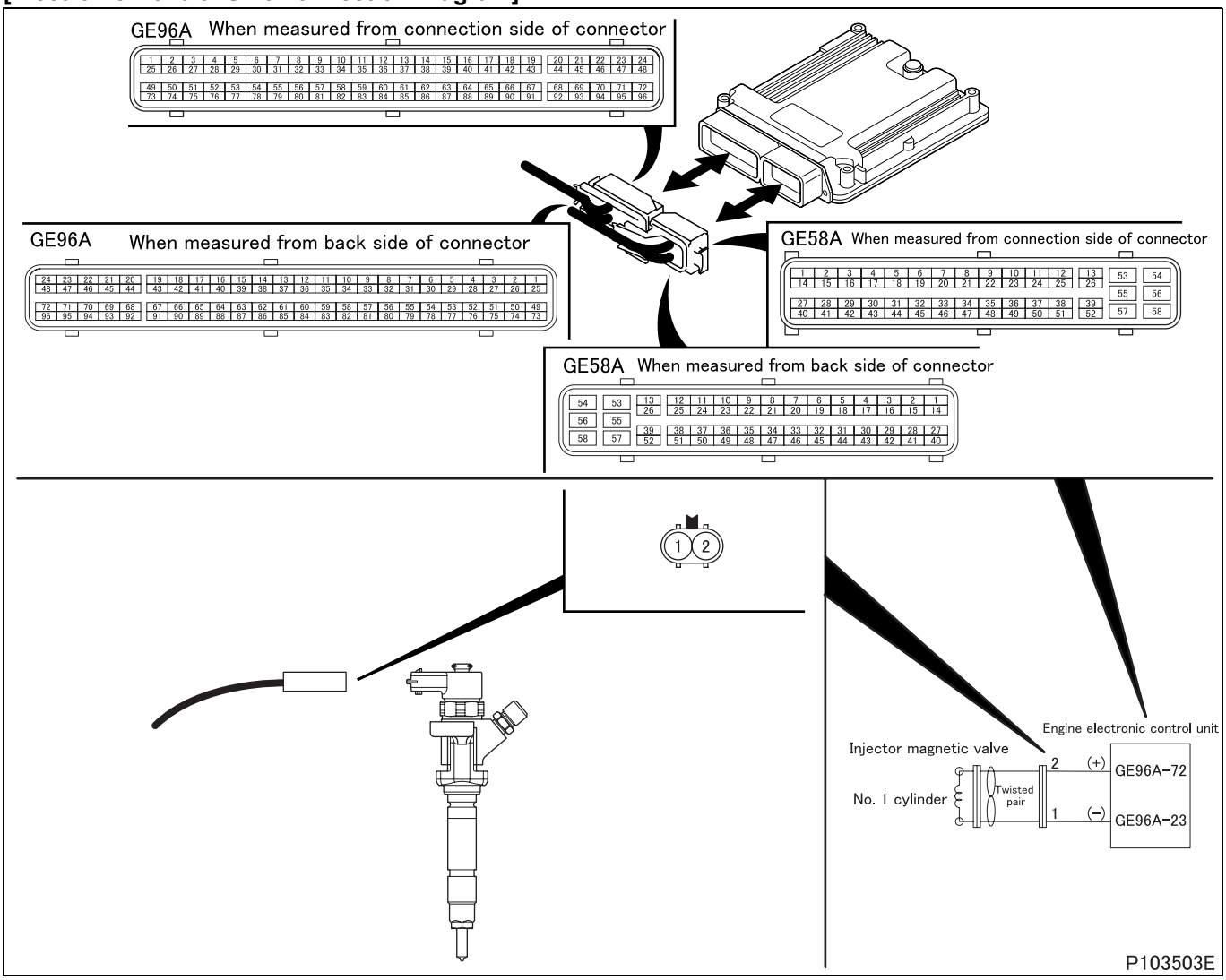

[Parts Identification and Location]

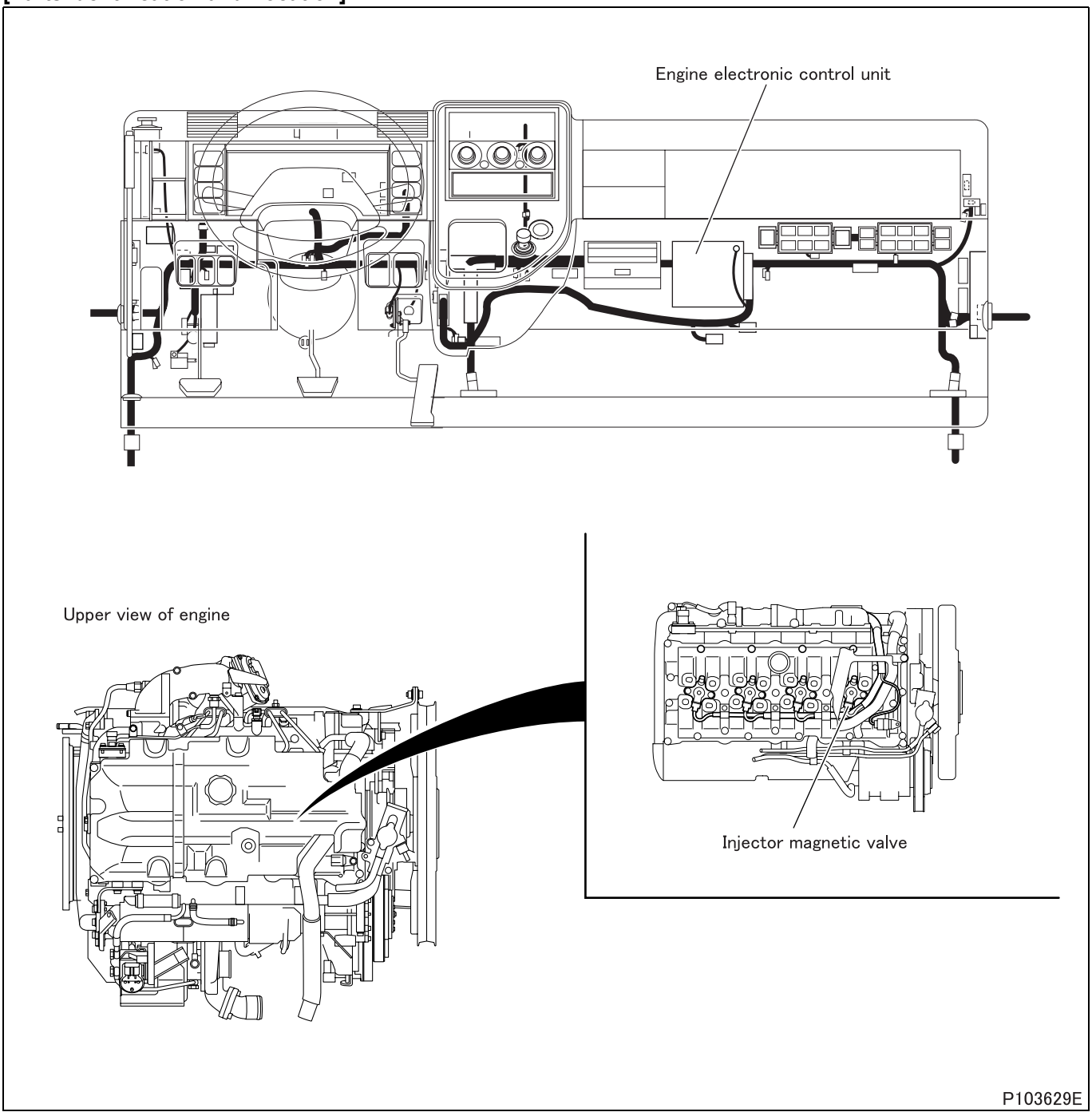

[Fault diagnosis]

- Perform checks in the sequence of the following steps.

Step 1	Inspection items		Inspection by control data
	Maintenance item		Perform actuator test item No. BB “Injector Test 1”
	Inspection condition		• Vehicle: stationary (vehicle speed 0 km/h {0 MPH}) • Engine speed: 1500 rpm or less • Transmission: neutral • The current diagnosis code does not occur.
	Requirements		Injector (No. 1 cylinder) stops injection and engine vibrations become slightly larger.
	Inspection result (Is the judging standard satisfied?)	YES	Go to transient fault (See Gr00.).
		NO	Go to step 2.

Step 2	Inspection items		Inspection by electronic drive unit connector
	Maintenance item		Measure value of resistance between connector (GE96A) terminal No. 23 and 72.
	Inspection condition		Disconnect electronic control unit from harness and measure from connection side of harness connector.
	Requirements		0.255 ± 0.04 Ω (20°C {68°F})
	Inspection result (Is the judging standard satisfied?)	YES	Go to step 3.
		NO	Go to step 4.

Step 3	Inspection items		Inspection of electronic control unit connector
	Maintenance item		Inspection of connector
	Inspection condition		–
	Requirements		• Connector is properly connected. • No trace of water entry is found. • No corrosion is found in terminal. • Connection to terminal is appropriate.
	Inspection result (Is the judging standard satisfied?)	YES	Go to step 8.
		NO	Modify connector.

Step 4	Inspection items		Inspection of injector magnetic valve connector
	Maintenance item		Inspection of connector
	Inspection condition		–
	Requirements		• Connector is properly connected. • Connection to terminal is appropriate.
	Inspection result (Is the judging standard satisfied?)	YES	Go to step 5.
		NO	Modify connector.

Step 5	Inspection items		Inspection of injector magnetic valve unit
	Maintenance item		Measure value of resistance between connector terminal No. 1 and 2.
	Inspection condition		–
	Requirements		0.255 ± 0.04 Ω (20°C {68°F})
	Inspection result (Is the judging standard satisfied?)	YES	Go to step 6.
		NO	Replacement of injector

<Step 5 inspection diagram>

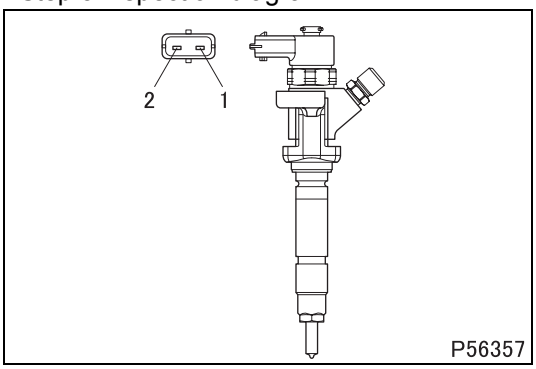

Step 6	Inspection items		Inspection of harness between injector magnetic valve and electronic control unit (power supply)
	Maintenance item		Check circuit between injector magnetic valve connector terminal No. 2 and electronic control unit connector (GE96A) terminal No. 72.
	Inspection condition		Disconnect each device from harness and measure from connection side of harness connector.
	Requirements		There is continuity.
	Inspection result (Is the judging standard satisfied?)	YES	Go to step 7.
		NO	Modify harness.

Step 7	Inspection items		Inspection of harness between injector magnetic valve and electronic control unit (ground)
	Maintenance item		Check circuit between injector magnetic valve connector terminal No. 1 and electronic control unit connector (GE96A) terminal No. 23.
	Inspection condition		Disconnect each device from harness and measure from connection side of harness connector.
	Requirements		There is continuity.
	Inspection result (Is the judging standard satisfied?)	YES	Go to step 8.
		NO	Modify harness.

Step 8	Inspection items		Inspection by control data
	Maintenance item		Perform actuator test item No. BB “Injector Test 1”
	Inspection condition		• Vehicle: stationary (vehicle speed 0 km/h {0 MPH}) • Engine speed: 1500 rpm or less • Transmission: neutral • The current diagnosis code does not occur.
	Requirements		Injector (No. 1 cylinder) stops injection and engine vibrations become slightly larger.
	Inspection result (Is the judging standard satisfied?)	YES	Go to transient fault (See Gr00.).
		NO	Replacement of electronic control unit

[Fault code]
Diagnosis code: P0263/Flash code: 53
[Monitor]
Abnormality in cylinder balance correction
[Fault (outline)]
Cylinder balancing out of range
[Diagnosis check]
- Check is made to determine if variation to correct in injection quantity between cylinders is excessive.

[Code generation condition]
- Corrected fuel injection quantity remains 5 mg/cycle or more for 10 consecutive seconds.
  (Warning lamp is lit and diagnosis code is displayed on third establishment of code generation condition.)

[Diagnosis check timing]
- Fault diagnosis is performed only once during the driving cycle.

[Diagnostic requirement]
- Water temperature: above 65°C {149°F}
- PTO status: OFF
- Cylinder balance: closed loop control

<Under closed loop control>
  - Engine speed: 630 to 820 rpm
  - Fuel injection quantity: 2 to 99 mg/cyc
- Engine operating mode: normal (engine in operation)
- Time till above conditions were met: more than 10 seconds
- The fuel balancing compensation (FBC) value for a cylinder deviates by 5 mg/cyc larger than that for any other cylinders.
- Fuel Balancing Compensation (FBC) monitor: in order
- Water temperature sensor: in order
- Engine speed sensor: in order
- Cylinder recognition sensor: in order
- Battery voltage: in order
- MPROP (rail pressure control valve): in order
- Injector: in order

[Control effected by electronic control unit during fault]
- Related fault check is stopped.

[Probable cause of trouble]
- Malfunction of injector

[Recoverability]
- Recovered if signal becomes normal when starter switch is turned OFF to ON (power supply resumed to electronic control unit).
  (Warning lamp is extinguished and diagnosis code is cleared at fourth display of diagnosis code after recovery.)

[Fault diagnosis]

- Perform checks in the sequence of the following steps.

Step 1	Inspection items		Inspection by control data
	Maintenance item		Check if following diagnosis codes occur simultaneously. • P0261 “Injector #1-A (Low)” • P0262 “Injector #1-A (High)” • P0264 “Injector #2-A (Low)” • P0265 “Injector #2-A (High)” • P0267 “Injector #3-A (Low)” • P0268 “Injector #3-A (High)” • P0270 “Injector #4-A (Low)” • P0271 “Injector #4-A (High)”
	Inspection condition		• Starter switch: ON • Engine: started
	Requirements		No codes occur.
	Inspection result (Is the judging standard satisfied?)	YES	Replacement of injector (No. 1 cylinder)
		NO	Inspect diagnosis code that is occurring.

[Fault code]
Diagnosis code: P0264/Flash code: 8
[Monitor]
Failure of injector magnetic valve (No. 2 cylinder)
[Fault (outline)]
Injector short circuit (No. 2 cylinder)
[Diagnosis check]
- Injector magnetic valve (No. 2 cylinder) circuit is monitored for fault.

[Code generation condition]
- Injector magnetic valve (No. 2 cylinder) circuit remains shorted to ground as detected for 3 consecutive cycles. (Warning lamp is lit and diagnosis code is displayed on first establishment of code generation condition.)

[Diagnosis check timing]
- Fault diagnosis is continuously performed during the driving cycle.

[Diagnostic requirement]
–

[Control effected by electronic control unit during fault]
- Injector magnetic valve (No. 2 and No. 3 cylinder) is stopped.
- Exhaust gas recirculation control is stopped.
- Throttle controls disabled
- Misfire detection is stopped.
- Auto cruise control stopped
- Diesel particulate filter regeneration is stopped.
- Turbocharger actuator test is inhibited.
- Related fault check is stopped.

[Probable cause of trouble]
- Open-circuit or short-circuit of harness between electronic control unit and injector magnetic valve
- Malfunction of each connector
- Malfunction of injector magnetic valve
- Malfunction of electronic control unit

[Recoverability]
- Recovered if signal becomes normal when starter switch is turned OFF to ON (power supply resumed to electronic control unit).
  (Warning lamp is extinguished and diagnosis code is cleared at fourth display of diagnosis code after recovery.)

Electronic Control Unit Connection Diagram]

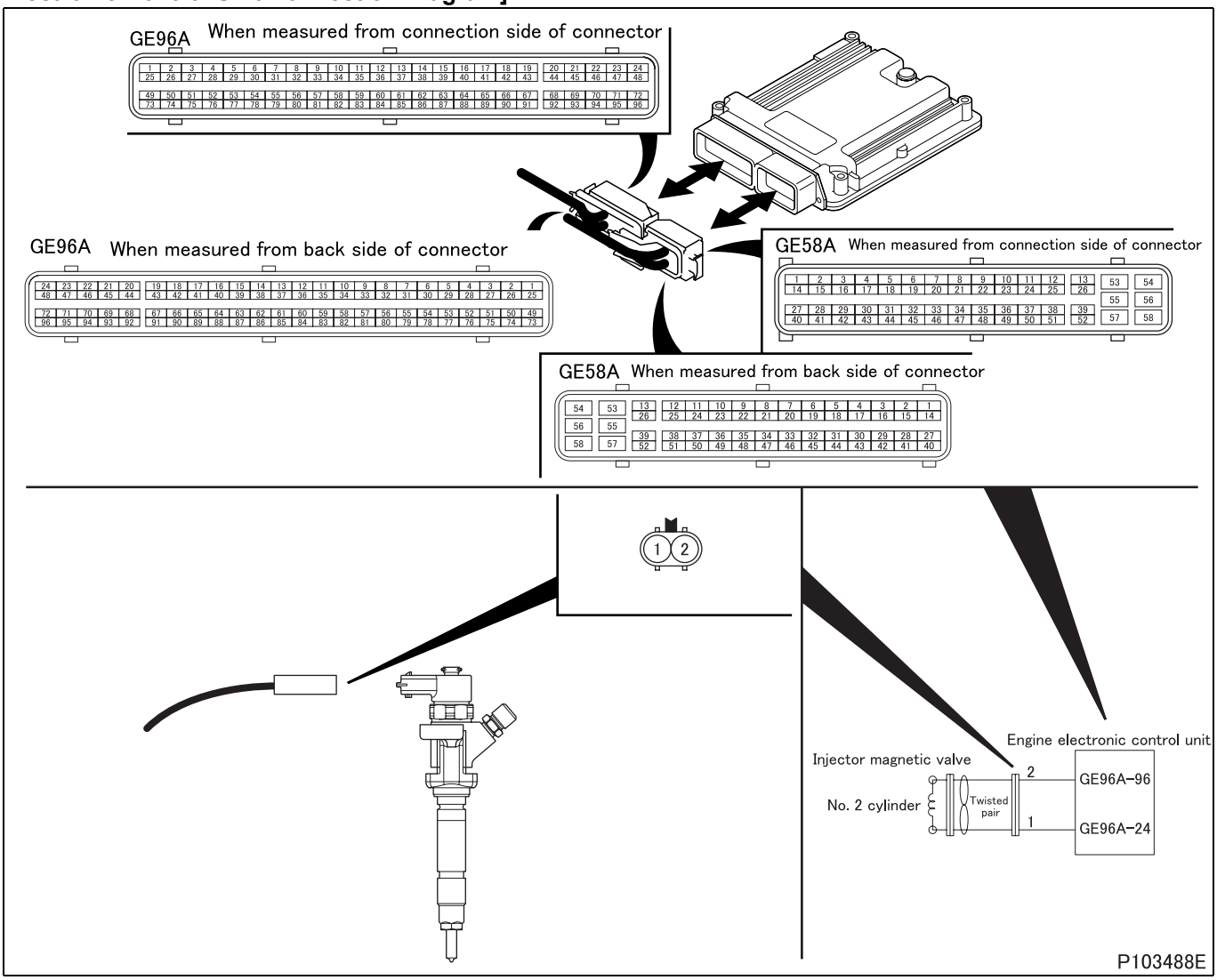

[Parts Identification and Location]

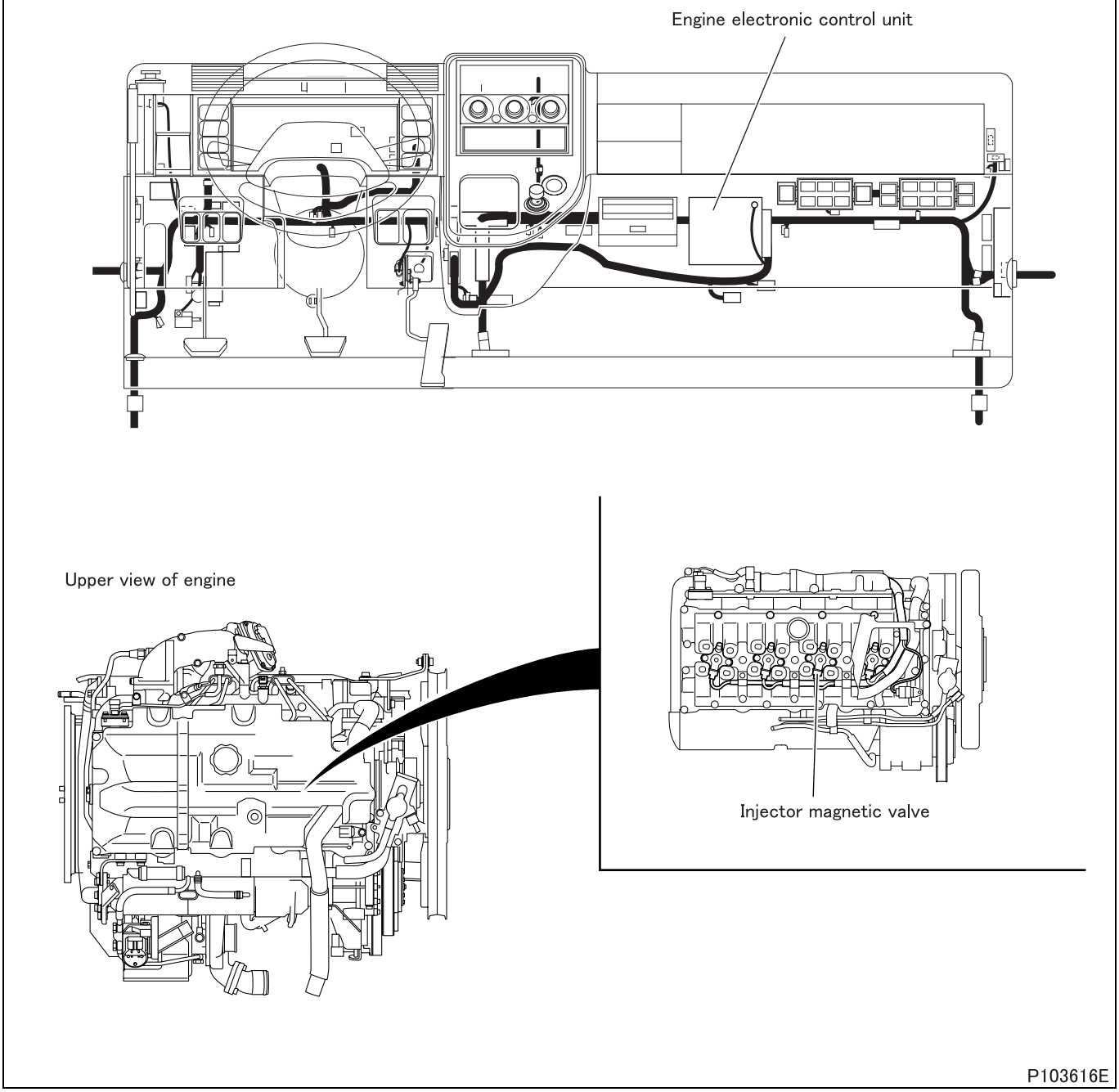

[Fault diagnosis]

- Perform checks in the sequence of the following steps.

Step 1	Inspection items		Inspection by control data
	Maintenance item		Perform actuator test item No. BD “Injector Test 3”
	Inspection condition		• Vehicle: stationary (vehicle speed 0 km/h {0 MPH}) • Engine speed: 1500 rpm or less • Transmission: neutral • The current diagnosis code does not occur.
	Requirements		Injector (No. 2 cylinder) stops injection and engine vibrations become slightly larger.
	Inspection result (Is the judging standard satisfied?)	YES	Go to transient fault (See Gr00.).
		NO	Go to step 2.

Step 2	Inspection items		Inspection by electronic control unit connector
	Maintenance item		Measure value of resistance between connector (GE96A) terminal No. 24 and 96.
	Inspection condition		Disconnect electronic control unit from harness and measure from connection side of harness connector.
	Requirements		0.255 ± 0.04 Ω (20°C {68°F})
	Inspection result (Is the judging standard satisfied?)	YES	Go to step 3.
		NO	Go to step 4.

Step 3	Inspection items		Inspection of electronic control unit connector
	Maintenance item		Inspection of connector
	Inspection condition		–
	Requirements		• Connector is properly connected. • No trace of water entry is found. • No corrosion is found in terminal. • Connection to terminal is appropriate.
	Inspection result (Is the judging standard satisfied?)	YES	Go to step 8.
		NO	Modify connector.

Step 4	Inspection items		Inspection of injector magnetic valve connector
	Maintenance item		Inspection of connector
	Inspection condition		–
	Requirements		• Connector is properly connected. • Connection to terminal is appropriate.
	Inspection result (Is the judging standard satisfied?)	YES	Go to step 5.
		NO	Modify connector.

Step 5	Inspection items		Inspection of injector magnetic valve unit
	Maintenance item		Measure value of resistance between connector terminal No. 1 and 2.
	Inspection condition		–
	Requirements		0.255 ± 0.04 Ω (20°C {68°F})
	Inspection result (Is the judging standard satisfied?)	YES	Go to step 6.
		NO	Replacement of injector

<Step 5 inspection diagram>

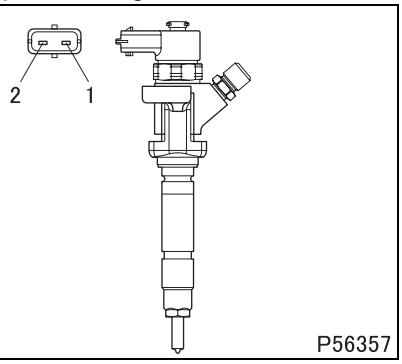

Step 6	Inspection items		Inspection of harness between injector magnetic valve and electronic control unit (power supply)
	Maintenance item		Check circuit between injector magnetic valve connector terminal No. 2 and electronic control unit connector (GE96A) terminal No. 96.
	Inspection condition		Disconnect each device from harness and measure from connection side of harness connector.
	Requirements		There is continuity.
	Inspection result (Is the judging standard satisfied?)	YES	Go to step 7.
		NO	Modify connector.

Step 7	Inspection items		Inspection of harness between injector magnetic valve and electronic control unit (ground)
	Maintenance item		Check circuit between injector magnetic valve connector terminal No. 1 and electronic control unit connector (GE96A) terminal No. 24.
	Inspection condition		Disconnect each device from harness and measure from connection side of harness connector.
	Requirements		There is continuity.
	Inspection result (Is the judging standard satisfied?)	YES	Go to step 8.
		NO	Modify harness.

Step 8	Inspection items		Inspection by control data
	Maintenance item		Perform actuator test item No. BD “Injector Test 3”
	Inspection condition		• Vehicle: stationary (vehicle speed 0 km/h {0 MPH}) • Engine speed: 1500 rpm or less • Transmission: neutral • The current diagnosis code does not occur.
	Requirements		Injector (No. 2 cylinder) stops injection and engine vibrations become slightly larger.
	Inspection result (Is the judging standard satisfied?)	YES	Go to transient fault (See Gr00.).
		NO	Replacement of electronic control unit

[Fault code]
Diagnosis code: P0265/Flash code: 8
[Monitor]
Failure of injector magnetic valve (No. 2 cylinder)
[Fault (outline)]
Injector short circuit (No. 2 cylinder)
[Diagnosis check]
- Injector magnetic valve (No. 2 cylinder) circuit is monitored for fault.

[Code generation condition]
- Injector magnetic valve (No. 2 cylinder) circuit remains shorted to power supply as detected for 3 consecutive cycles.
  (Warning lamp is lit and diagnosis code is displayed on first establishment of code generation condition.)

[Diagnosis check timing]
- Fault diagnosis is continuously performed during the driving cycle.

[Diagnostic requirement]
–

[Control effected by electronic control unit during fault]
- Injector magnetic valve (No. 2 and No. 3 cylinder) is stopped.
- Exhaust gas recirculation control is stopped.
- Throttle controls disabled
- Misfire detection is stopped.
- Auto cruise control stopped
- Diesel particulate filter regeneration is stopped.
- Turbocharger actuator test is inhibited.
- Related fault check is stopped.

[Probable cause of trouble]
- Open-circuit or short-circuit of harness between electronic control unit and injector magnetic valve
- Malfunction of each connector
- Malfunction of injector magnetic valve
- Malfunction of electronic control unit

[Recoverability]
- Recovered if signal becomes normal when starter switch is turned OFF to ON (power supply resumed to electronic control unit).
  (Warning lamp is extinguished and diagnosis code is cleared at fourth display of diagnosis code after recovery.)

[Electronic Control Unit Connection Diagram]

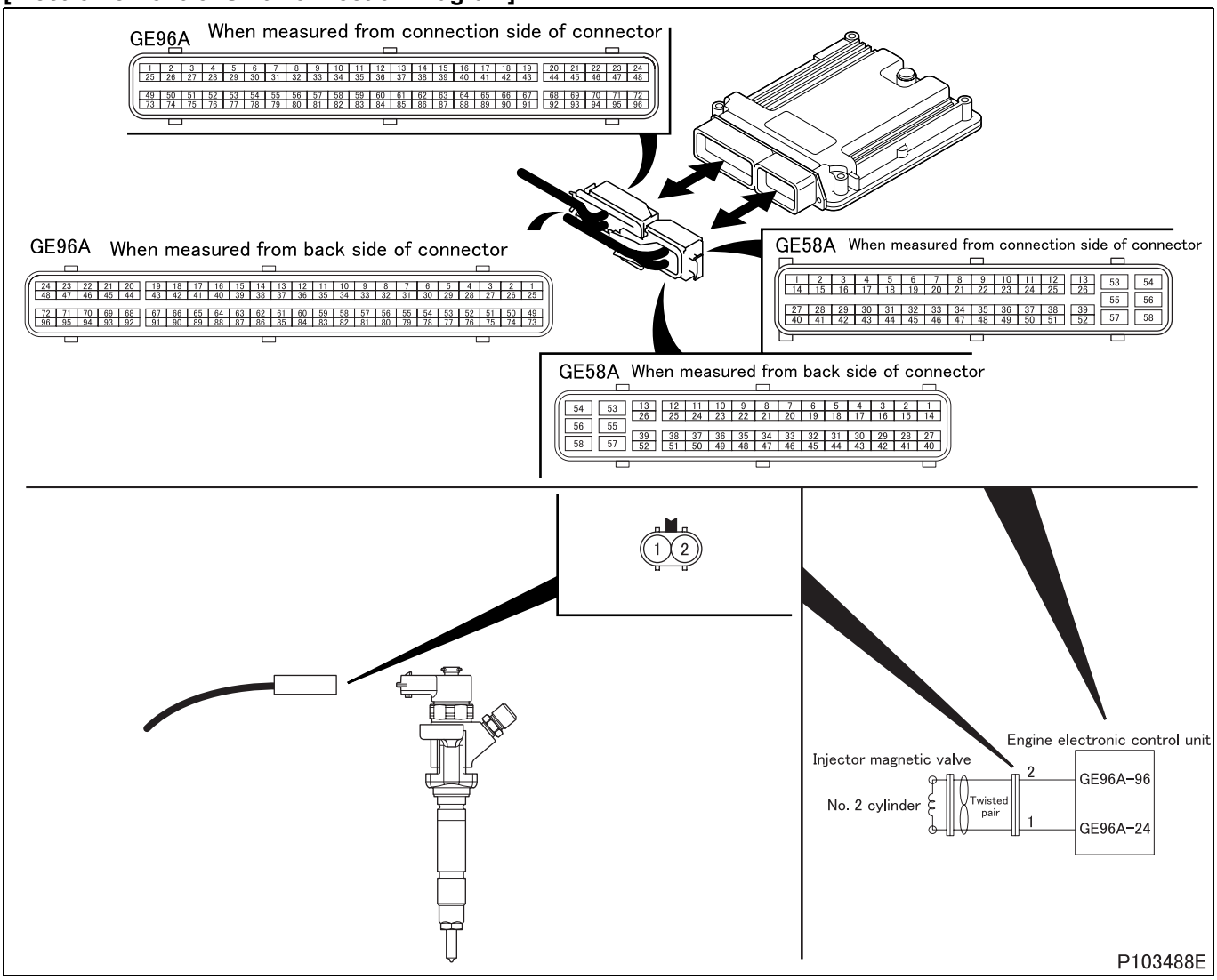

[Parts Identification and Location]

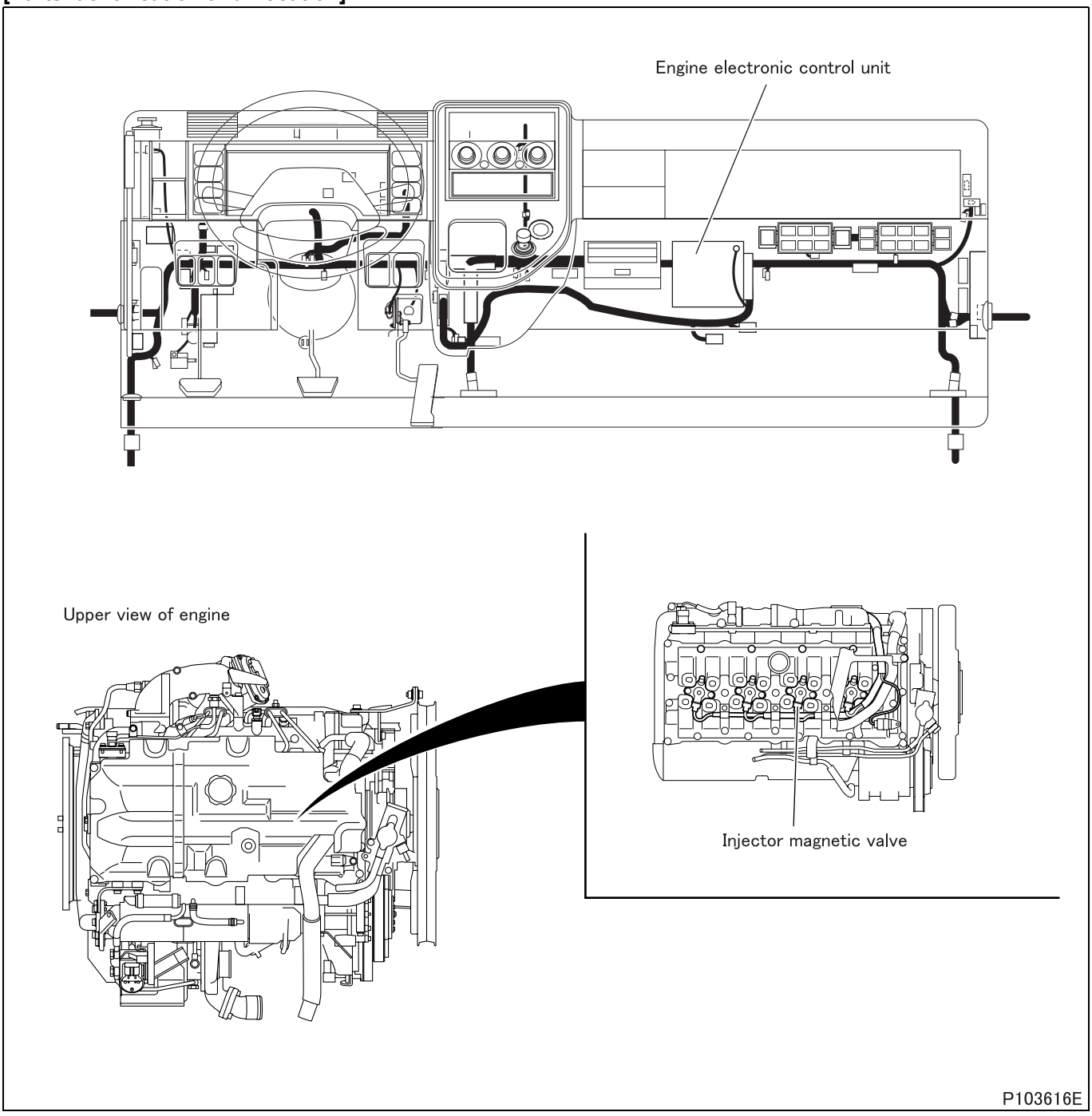

[Fault diagnosis]

- Perform checks in the sequence of the following steps.

Step 1	Inspection items		Inspection by control data
	Maintenance item		Perform actuator test item No. BD “Injector Test 3”
	Inspection condition		• Vehicle: stationary (vehicle speed 0 km/h {0 MPH}) • Engine speed: 1500 rpm or less • Transmission: neutral • The current diagnosis code does not occur.
	Requirements		Injector (No. 2 cylinder) stops injection and engine vibrations become slightly larger.
	Inspection result (Is the judging standard satisfied?)	YES	Go to transient fault (See Gr00.).
		NO	Go to step 2.

Step 2	Inspection items		Inspection by electronic control unit connector
	Maintenance item		Measure value of resistance between connector (GE96A) terminal No. 24 and 96.
	Inspection condition		Disconnect electronic control unit from harness and measure from connection side of harness connector.
	Requirements		0.255 ± 0.04 Ω (20°C {68°F})
	Inspection result (Is the judging standard satisfied?)	YES	Go to step 3.
		NO	Go to step 4.

Step 3	Inspection items		Inspection of electronic control unit connector
	Maintenance item		Inspection of connector
	Inspection condition		–
	Requirements		• Connector is properly connected. • No trace of water entry is found. • No corrosion is found in terminal. • Connection to terminal is appropriate.
	Inspection result (Is the judging standard satisfied?)	YES	Go to step 8.
		NO	Modify connector.

Step 4	Inspection items		Inspection of injector magnetic valve connector
	Maintenance item		Inspection of connector
	Inspection condition		–
	Requirements		• Connector is properly connected. • Connection to terminal is appropriate.
	Inspection result (Is the judging standard satisfied?)	YES	Go to step 5.
		NO	Modify connector.

Step 5	Inspection items		Inspection of injector magnetic valve unit
	Maintenance item		Measure value of resistance between connector terminal No. 1 and 2.
	Inspection condition		–
	Requirements		0.255 ± 0.04 Ω (20°C {68°F})
	Inspection result (Is the judging standard satisfied?)	YES	Go to step 6.
		NO	Replacement of injector

<Step 5 inspection diagram>

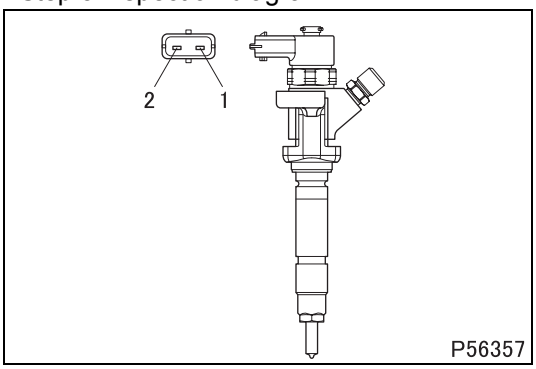

Step 6	Inspection items		Inspection of harness between injector magnetic valve and electronic control unit (power supply)
	Maintenance item		Check circuit between injector magnetic valve connector terminal No. 2 and electronic control unit connector (GE96A) terminal No. 96.
	Inspection condition		Disconnect each device from harness and measure from connection side of harness connector.
	Requirements		There is continuity.
	Inspection result (Is the judging standard satisfied?)	YES	Go to step 7.
		NO	Modify connector.

Step 7	Inspection items		Inspection of harness between injector magnetic valve and electronic control unit (ground)
	Maintenance item		Check circuit between injector magnetic valve connector terminal No. 1 and electronic control unit connector (GE96A) terminal No. 24.
	Inspection condition		Disconnect each device from harness and measure from connection side of harness connector.
	Requirements		There is continuity.
	Inspection result (Is the judging standard satisfied?)	YES	Go to step 8.
		NO	Modify harness.

Step 8	Inspection items		Inspection by control data
	Maintenance item		Perform actuator test item No. BD “Injector Test 3”
	Inspection condition		• Vehicle: stationary (vehicle speed 0 km/h {0 MPH}) • Engine speed: 1500 rpm or less • Transmission: neutral • The current diagnosis code does not occur.
	Requirements		Injector (No. 2 cylinder) stops injection and engine vibrations become slightly larger.
	Inspection result (Is the judging standard satisfied?)	YES	Go to transient fault (See Gr00.).
		NO	Replacement of electronic control unit

[Fault code]
Diagnosis code: P0266/Flash code: 53
[Monitor]
Abnormality in cylinder balance correction
[Fault (outline)]
- Cylinder balancing out of range
- Sensor signal range check
- Ref voltage

[Diagnosis check]
- Check is made to determine if variation to correct in injection quantity between cylinders is excessive.

[Code generation condition]
- Corrected fuel injection quantity remains 5 mg/cycle or more for 10 consecutive seconds.
  (Warning lamp is lit and diagnosis code is displayed on third establishment of code generation condition.)

[Diagnosis check timing]
- Fault diagnosis is performed only once during the driving cycle.

[Diagnostic requirement]
- Water temperature: above 65°C {149°F}
- PTO status: OFF
- Cylinder balance: closed loop control

<Under closed loop control>
  - Engine speed: 630 to 820 rpm
  - Fuel injection quantity: 2 to 99 mg/cyc
- Engine operating mode: normal (engine in operation)
- Time till above conditions were met: more than 10 seconds
- The fuel balancing compensation (FBC) value for a cylinder deviates by 5 mg/cyc larger than that for any other cylinders.
- Fuel Balancing Compensation (FBC) monitor: in order
- Injector ignition: in order
- Water temperature sensor: in order
- Engine speed sensor: in order
- Cylinder recognition sensor: in order
- Battery voltage: in order
- MPROP (rail pressure control valve): in order
- Injector: in order

[Control effected by electronic control unit during fault]
- Related fault check is stopped.

[Probable cause of trouble]
- Malfunction of injector

[Recoverability]
- Recovered if signal becomes normal when starter switch is turned OFF to ON (power supply resumed to electronic control unit).
  (Warning lamp is extinguished and diagnosis code is cleared at fourth display of diagnosis code after recovery.)

[Fault diagnosis]

- Perform checks in the sequence of the following steps.

Step 1	Inspection items		Inspection by control data
	Maintenance item		Check if following diagnosis codes occur simultaneously. • P0261 “Injector #1-A (Low)” • P0262 “Injector #1-A (High)” • P0264 “Injector #2-A (Low)” • P0265 “Injector #2-A (High)” • P0267 “Injector #3-A (Low)” • P0268 “Injector #3-A (High)” • P0270 “Injector #4-A (Low)” • P0271 “Injector #4-A (High)”
	Inspection condition		• Starter switch: ON • Engine: started
	Requirements		No codes occur.
	Inspection result (Is the judging standard satisfied?)	YES	Replacement of injector (No. 2 cylinder)
		NO	Inspect diagnosis code that is occurring.

[Fault code]
Diagnosis code: P0267/Flash code: 38
[Monitor]
Failure of injector magnetic valve (No. 3 cylinder)
[Fault (outline)]
Injector short circuit (No. 3 cylinder)
[Diagnosis check]
- Injector magnetic valve (No. 3 cylinder) circuit is monitored for fault.

[Code generation condition]
- Injector magnetic valve (No. 3 cylinder) circuit remains shorted to ground as detected for 3 consecutive cycles. (Warning lamp is lit and diagnosis code is displayed on first establishment of code generation condition.)

[Diagnosis check timing]
- Fault diagnosis is continuously performed during the driving cycle.

[Diagnostic requirement]
–

[Control effected by electronic control unit during fault]
- Injector magnetic valve (No. 2 and No. 3 cylinder) is stopped.
- Exhaust gas recirculation control is stopped.
- Throttle controls disabled
- Misfire detection is stopped.
- Auto cruise control stopped
- Diesel particulate filter regeneration is stopped.
- Turbocharger actuator test is inhibited.
- Related fault check is stopped.

[Probable cause of trouble]
- Open-circuit or short-circuit of harness between electronic control unit and injector magnetic valve
- Malfunction of each connector
- Malfunction of injector magnetic valve
- Malfunction of electronic control unit

[Recoverability]
- Recovered if signal becomes normal when starter switch is turned OFF to ON (power supply resumed to electronic control unit).
  (Warning lamp is extinguished and diagnosis code is cleared at fourth display of diagnosis code after recovery.)

[Electronic Control Unit Connection Diagram]

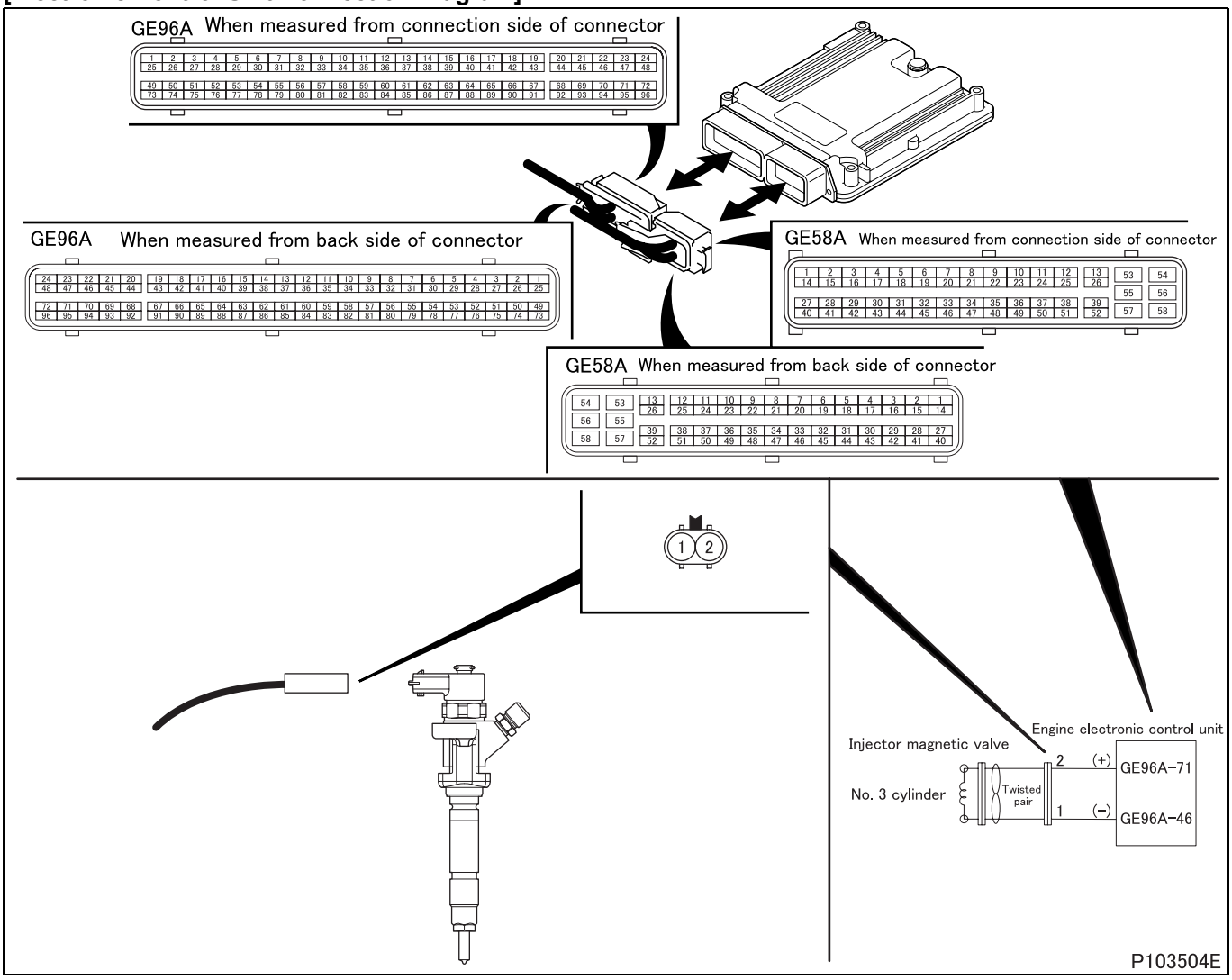

[Parts Identification and Location]

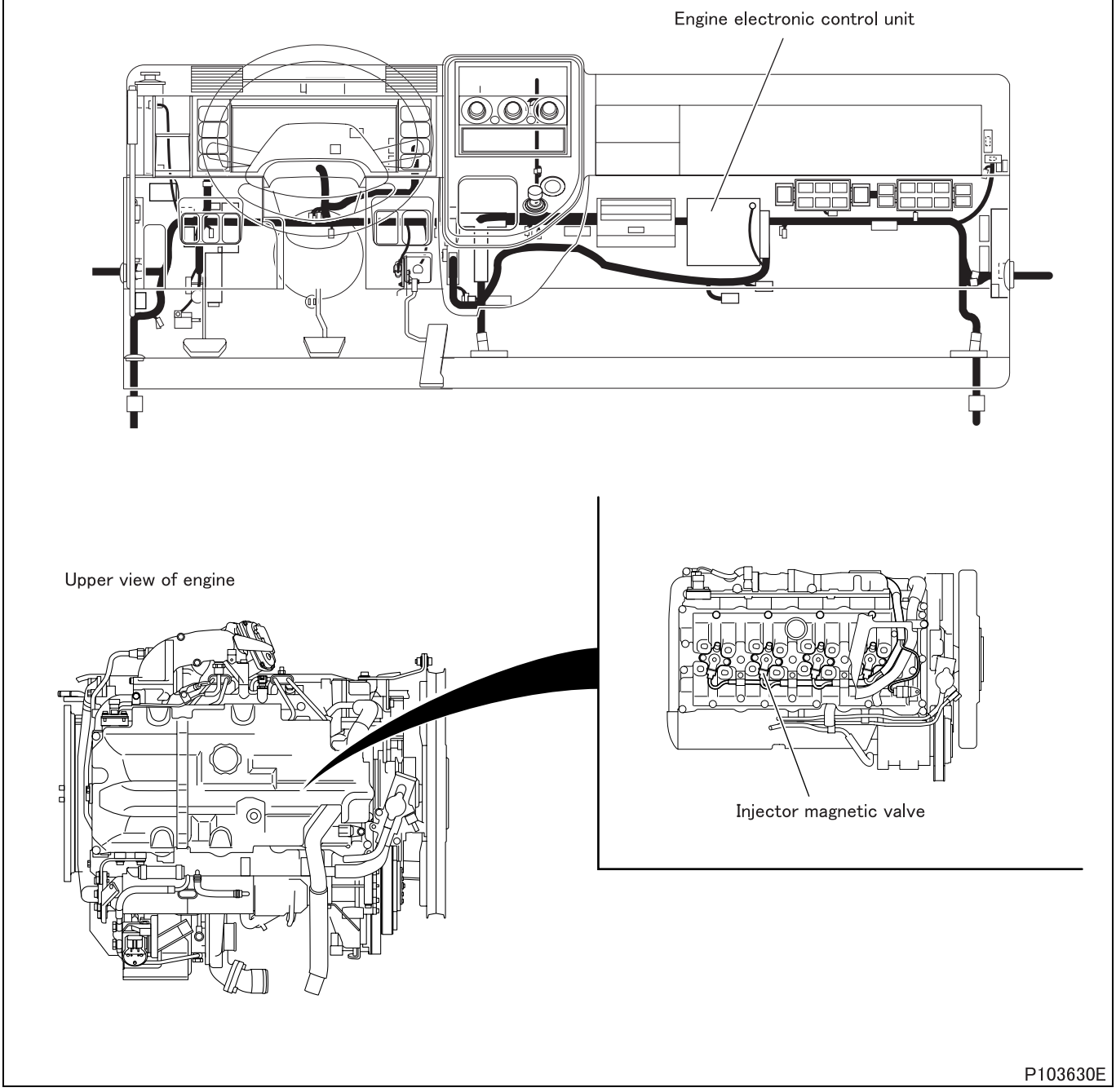

[Fault diagnosis]

- Perform checks in the sequence of the following steps.

Step 1	Inspection items		Inspection by control data
	Maintenance item		Perform actuator test item No. BE “Injector Test 4”
	Inspection condition		• Vehicle: stationary (vehicle speed 0 km/h {0 MPH}) • Engine speed: 1500 rpm or less • Transmission: neutral • The current diagnosis code does not occur.
	Requirements		Injector (No. 3 cylinder) stops injection and engine vibrations become slightly larger.
	Inspection result (Is the judging standard satisfied?)	YES	Go to transient fault (See Gr00.).
		NO	Go to step 2.

Step 2	Inspection items		Inspection by electronic control unit connector
	Maintenance item		Measure value of resistance between connector (GE96A) terminal No. 46 and 71.
	Inspection condition		Disconnect electronic control unit from harness and measure from connection side of harness connector.
	Requirements		0.255 ± 0.04 Ω (20°C {68°F})
	Inspection result (Is the judging standard satisfied?)	YES	Go to step 3.
		NO	Go to step 4.

Step 3	Inspection items		Inspection of electronic control unit connector
	Maintenance item		Inspection of connector
	Inspection condition		–
	Requirements		• Connector is properly connected. • No trace of water entry is found. • No corrosion is found in terminal. • Connection to terminal is appropriate.
	Inspection result (Is the judging standard satisfied?)	YES	Go to step 8.
		NO	Modify connector.

Step 4	Inspection items		Inspection of injector magnetic valve connector
	Maintenance item		Inspection of connector
	Inspection condition		–
	Requirements		• Connector is properly connected. • Connection to terminal is appropriate.
	Inspection result (Is the judging standard satisfied?)	YES	Go to step 5.
		NO	Modify connector.

Step 5	Inspection items		Inspection of injector magnetic valve unit
	Maintenance item		Measure value of resistance between connector terminal No. 1 and 2.
	Inspection condition		–
	Requirements		0.255 ± 0.04 Ω (20°C {68°F})
	Inspection result (Is the judging standard satisfied?)	YES	Go to step 6.
		NO	Replacement of injector

<Step 5 inspection diagram>

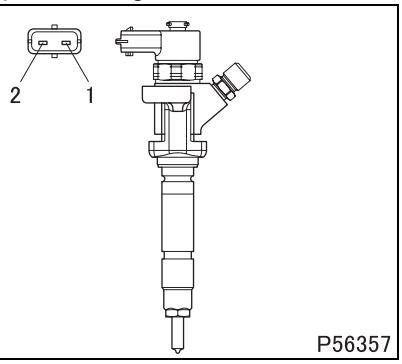

Step 6	Inspection items		Inspection of harness between injector magnetic valve and electronic control unit (power supply)
	Maintenance item		Check circuit between injector magnetic valve connector terminal No. 2 and electronic control unit connector (GE96A) terminal No. 71.
	Inspection condition		Disconnect each device from harness and measure from connection side of harness connector.
	Requirements		There is continuity.
	Inspection result (Is the judging standard satisfied?)	YES	Go to step 7.
		NO	Modify harness.

Step 7	Inspection items		Inspection of harness between injector magnetic valve and electronic control unit (ground)
	Maintenance item		Check circuit between injector magnetic valve connector terminal No. 1 and electronic control unit connector (GE96A) terminal No. 46.
	Inspection condition		Disconnect each device from harness and measure from connection side of harness connector.
	Requirements		There is continuity.
	Inspection result (Is the judging standard satisfied?)	YES	Go to step 8.
		NO	Modify harness.

Step 8	Inspection items		Inspection by control data
	Maintenance item		Perform actuator test item No. BE “Injector Test 4”
	Inspection condition		• Vehicle: stationary (vehicle speed 0 km/h {0 MPH}) • Engine speed: 1500 rpm or less • Transmission: neutral • The current diagnosis code does not occur.
	Requirements		Injector (No. 3 cylinder) stops injection and engine vibrations become slightly larger.
	Inspection result (Is the judging standard satisfied?)	YES	Go to transient fault (See Gr00.).
		NO	Replacement of electronic drive unit

[Fault code]
Diagnosis code: P0268/Flash code: 38
[Monitor]
Failure of injector magnetic valve (No. 3 cylinder)
[Fault (outline)]
Injector short circuit (No. 3 cylinder)
[Diagnosis check]
- Injector magnetic valve (No. 3 cylinder) circuit is monitored for fault.

[Code generation condition]
- Injector magnetic valve (No. 3 cylinder) circuit remains shorted to power supply as detected for 3 consecutive cycles.
  (Warning lamp is lit and diagnosis code is displayed on first establishment of code generation condition.)

[Diagnosis check timing]
- Fault diagnosis is continuously performed during the driving cycle.

[Diagnostic requirement]
–

[Control effected by electronic control unit during fault]
- Injector magnetic valve (No. 2 and No. 3 cylinder) is stopped.
- Exhaust gas recirculation control is stopped.
- Throttle controls disabled
- Misfire detection is stopped.
- Auto cruise control stopped
- Diesel particulate filter regeneration is stopped.
- Turbocharger actuator test is inhibited.
- Related fault check is stopped.

[Probable cause of trouble]
- Open-circuit or short-circuit of harness between electronic control unit and injector magnetic valve
- Malfunction of each connector
- Malfunction of injector magnetic valve
- Malfunction of electronic control unit

[Recoverability]
- Recovered if signal becomes normal when starter switch is turned OFF to ON (power supply resumed to electronic control unit).
  (Warning lamp is extinguished and diagnosis code is cleared at fourth display of diagnosis code after recovery.)

[Electronic Control Unit Connection Diagram]

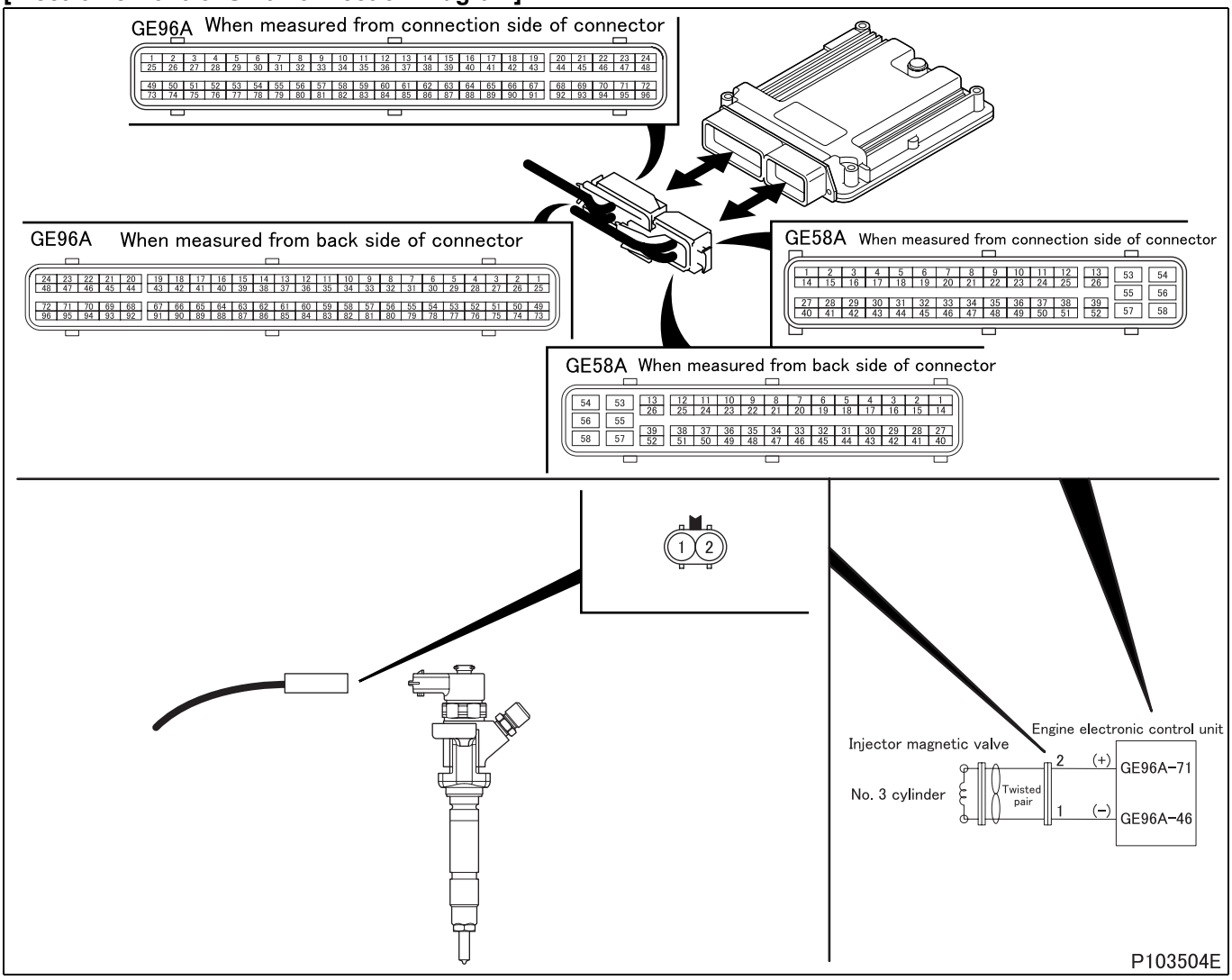

[Parts Identification and Location]

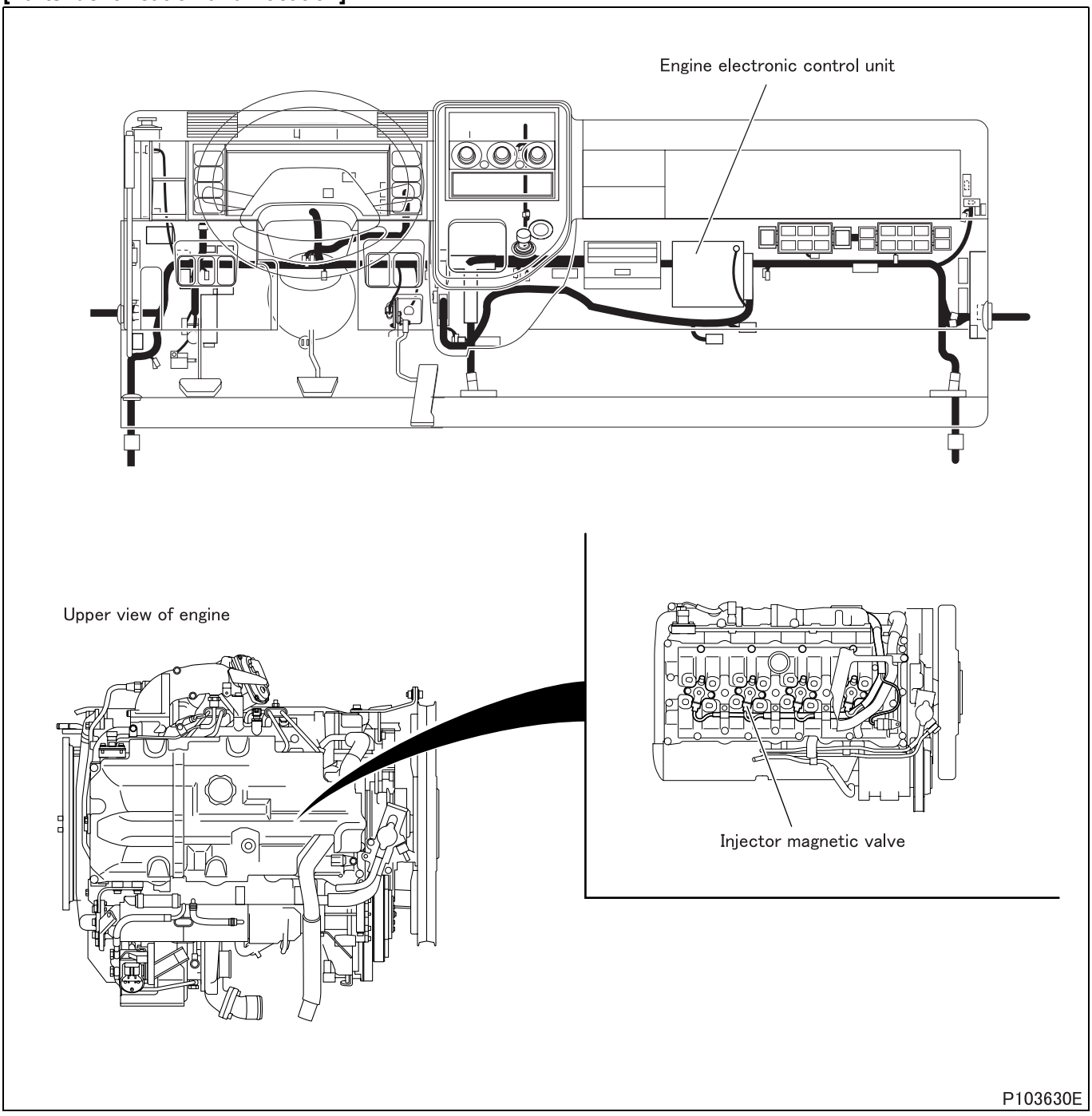

[Fault diagnosis]

- Perform checks in the sequence of the following steps.

Step 1	Inspection items		Inspection by control data
	Maintenance item		Perform actuator test item No. BE “Injector Test 4”
	Inspection condition		• Vehicle: stationary (vehicle speed 0 km/h {0 MPH}) • Engine speed: 1500 rpm or less • Transmission: neutral • The current diagnosis code does not occur.
	Requirements		Injector (No. 3 cylinder) stops injection and engine vibrations become slightly larger.
	Inspection result (Is the judging standard satisfied?)	YES	Go to transient fault (See Gr00.).
		NO	Go to step 2.

Step 2	Inspection items		Inspection by electronic control unit connector
	Maintenance item		Measure value of resistance between connector (GE96A) terminal No. 46 and 71.
	Inspection condition		Disconnect electronic control unit from harness and measure from connection side of harness connector.
	Requirements		0.255 ± 0.04 Ω (20°C {68°F})
	Inspection result (Is the judging standard satisfied?)	YES	Go to step 3.
		NO	Go to step 4.

Step 3	Inspection items		Inspection of electronic control unit connector
	Maintenance item		Inspection of connector
	Inspection condition		–
	Requirements		• Connector is properly connected. • No trace of water entry is found. • No corrosion is found in terminal. • Connection to terminal is appropriate.
	Inspection result (Is the judging standard satisfied?)	YES	Go to step 8.
		NO	Modify connector.

Step 4	Inspection items		Inspection of injector magnetic valve connector
	Maintenance item		Inspection of connector
	Inspection condition		–
	Requirements		• Connector is properly connected. • Connection to terminal is appropriate.
	Inspection result (Is the judging standard satisfied?)	YES	Go to step 5.
		NO	Modify connector.

Step 5	Inspection items		Inspection of injector magnetic valve unit
	Maintenance item		Measure value of resistance between connector terminal No. 1 and 2.
	Inspection condition		–
	Requirements		0.255 ± 0.04 Ω (20°C {68°F})
	Inspection result (Is the judging standard satisfied?)	YES	Go to step 6.
		NO	Replacement of injector

<Step 5 inspection diagram>

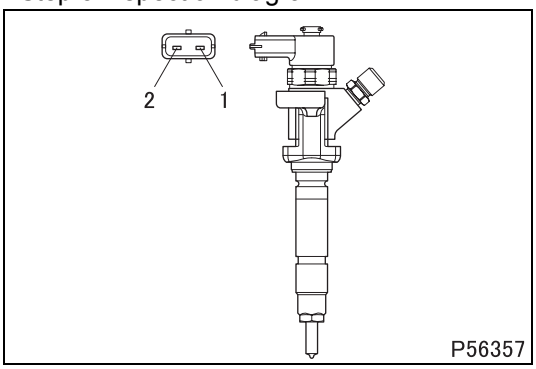

Step 6	Inspection items		Inspection of harness between injector magnetic valve and electronic control unit (power supply)
	Maintenance item		Check circuit between injector magnetic valve connector terminal No. 2 and electronic control unit connector (GE96A) terminal No. 71.
	Inspection condition		Disconnect each device from harness and measure from connection side of harness connector.
	Requirements		There is continuity.
	Inspection result (Is the judging standard satisfied?)	YES	Go to step 7.
		NO	Modify harness.

Step 7	Inspection items		Inspection of harness between injector magnetic valve and electronic control unit (ground)
	Maintenance item		Check circuit between injector magnetic valve connector terminal No. 1 and electronic control unit connector (GE96A) terminal No. 46.
	Inspection condition		Disconnect each device from harness and measure from connection side of harness connector.
	Requirements		There is continuity.
	Inspection result (Is the judging standard satisfied?)	YES	Go to step 8.
		NO	Modify harness.

Step 8	Inspection items		Inspection by control data
	Maintenance item		Perform actuator test item No. BE “Injector Test 4”
	Inspection condition		• Vehicle: stationary (vehicle speed 0 km/h {0 MPH}) • Engine speed: 1500 rpm or less • Transmission: neutral • The current diagnosis code does not occur.
	Requirements		Injector (No. 3 cylinder) stops injection and engine vibrations become slightly larger.
	Inspection result (Is the judging standard satisfied?)	YES	Go to transient fault (See Gr00.).
		NO	Replacement of electronic drive unit

[Fault code]
Diagnosis code: P0269/Flash code: 53
[Monitor]
Abnormality in cylinder balance correction
[Fault (outline)]
Cylinder balancing out of range
[Diagnosis check]
- Check is made to determine if variation to correct in injection quantity between cylinders is excessive.

[Code generation condition]
- Corrected fuel injection quantity remains 5 mg/cycle or more for 10 consecutive seconds.
  (Warning lamp is lit and diagnosis code is displayed on third establishment of code generation condition.)

[Diagnosis check timing]
- Fault diagnosis is performed only once during the driving cycle.

[Diagnostic requirement]
- Water temperature: above 65°C {149°F}
- PTO status: OFF
- Cylinder balance: closed loop control

<Under closed loop control>
  - Engine speed: 630 to 820 rpm
  - Fuel injection quantity: 2 to 99 mg/cyc
- Engine operating mode: normal (engine in operation)
- Time till above conditions were met: more than 10 seconds
- The fuel balancing compensation (FBC) value for a cylinder deviates by 5 mg/cyc larger than that for any other cylinders.
- Fuel Balancing Compensation (FBC) monitor: in order
- Injector ignition: in order
- Water temperature sensor: in order
- Engine speed sensor: in order
- Cylinder recognition sensor: in order
- Battery voltage: in order
- MPROP (rail pressure control valve): in order
- Injector: in order

[Control effected by electronic control unit during fault]
- Related fault check is stopped.

[Probable cause of trouble]
- Malfunction of injector

[Recoverability]
- Recovered if signal becomes normal when starter switch is turned OFF to ON (power supply resumed to electronic control unit).
  (Warning lamp is extinguished and diagnosis code is cleared at fourth display of diagnosis code after recovery.)

[Fault diagnosis]

- Perform checks in the sequence of the following steps.

Step 1	Inspection items		Inspection by control data
	Maintenance item		Check if following diagnosis codes occur simultaneously. • P0261 “Injector #1-A (Low)” • P0262 “Injector #1-A (High)” • P0264 “Injector #2-A (Low)” • P0265 “Injector #2-A (High)” • P0267 “Injector #3-A (Low)” • P0268 “Injector #3-A (High)” • P0270 “Injector #4-A (Low)” • P0271 “Injector #4-A (High)”
	Inspection condition		• Starter switch: ON • Engine: started
	Requirements		No codes occur.
	Inspection result (Is the judging standard satisfied?)	YES	Replacement of injector (No. 3 cylinder)
		NO	Inspect diagnosis code that is occurring.

[Fault code]
Diagnosis code: P0270/Flash code: 39
[Monitor]
Failure of injector magnetic valve (No. 4 cylinder)
[Fault (outline)]
Injector short circuit (No. 4 cylinder)
[Diagnosis check]
- Injector magnetic valve (No. 4 cylinder) circuit is monitored for fault.

[Code generation condition]
- Injector magnetic valve (No. 4 cylinder) circuit remains shorted to ground as detected for 3 consecutive cycles. (Warning lamp is lit and diagnosis code is displayed on first establishment of code generation condition.)

[Diagnosis check timing]
- Fault diagnosis is continuously performed during the driving cycle.

[Diagnostic requirement]
–

[Control effected by electronic control unit during fault]
- Injector magnetic valve (No. 1 and No. 4 cylinder) is stopped.
- Exhaust gas recirculation control is stopped.
- Throttle controls disabled
- Misfire detection is stopped.
- Auto cruise control stopped
- Diesel particulate filter regeneration is stopped.
- Turbocharger actuator test is inhibited.
- Related fault check is stopped.

[Probable cause of trouble]
- Open-circuit or short-circuit of harness between electronic control unit and injector magnetic valve
- Malfunction of each connector
- Malfunction of injector magnetic valve
- Malfunction of electronic control unit

[Recoverability]
- Recovered if signal becomes normal when starter switch is turned OFF to ON (power supply resumed to electronic control unit).
  (Warning lamp is extinguished and diagnosis code is cleared at fourth display of diagnosis code after recovery.)

[Electronic Control Unit Connection Diagram]

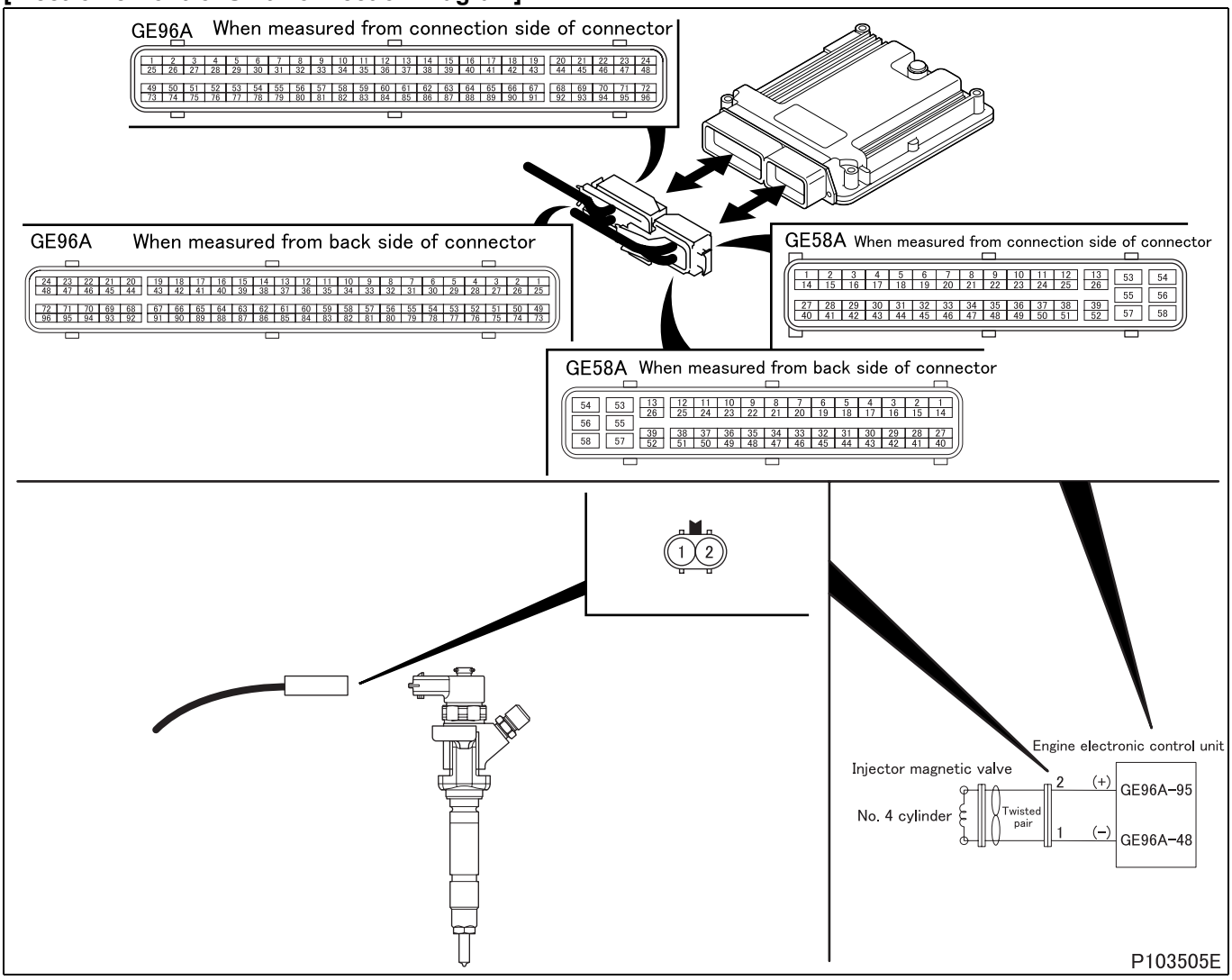

[Parts Identification and Location]

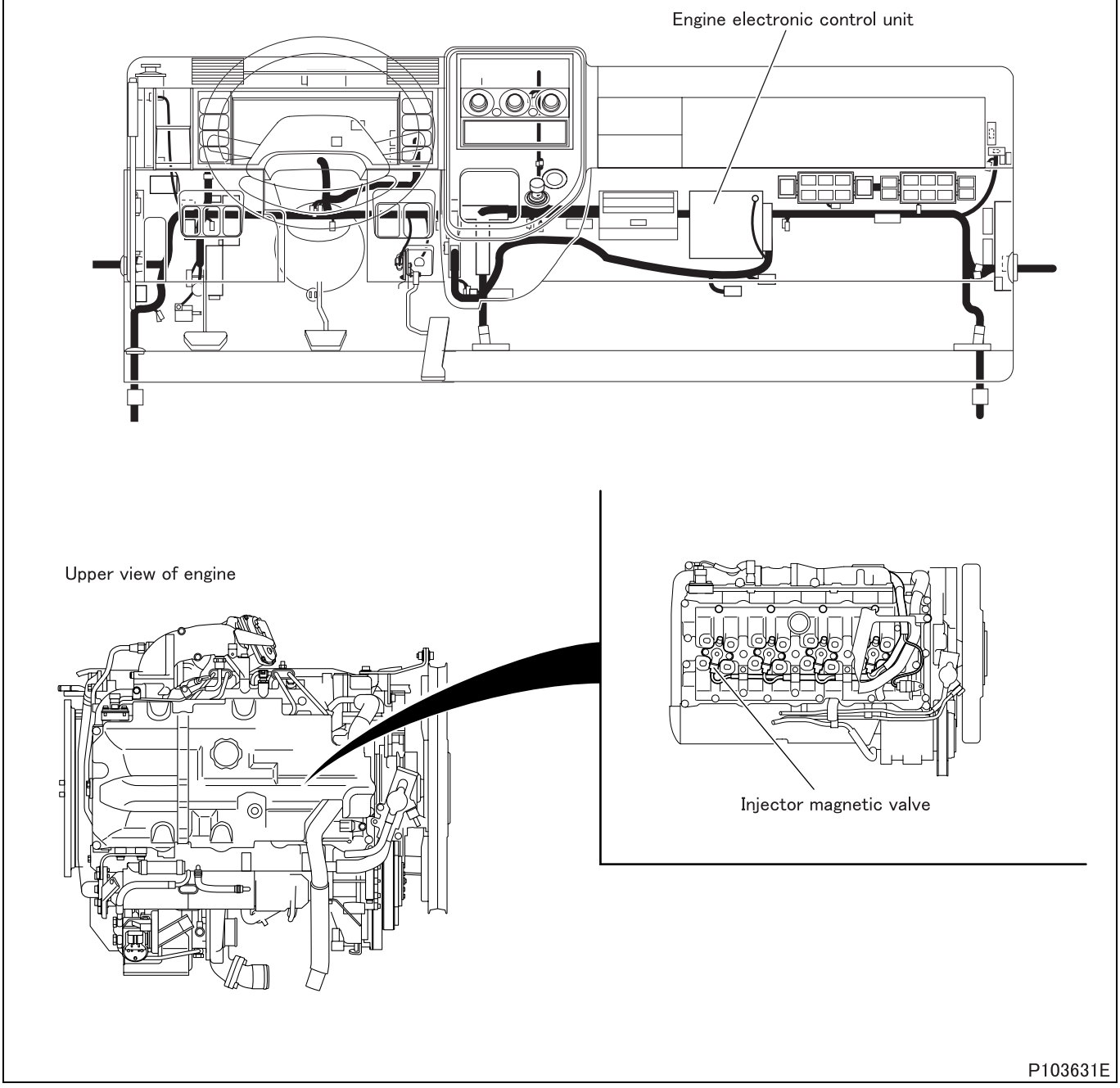

[Fault diagnosis]

- Perform checks in the sequence of the following steps.

Step 1	Inspection items		Inspection by control data
	Maintenance item		Perform actuator test item No. BC “Injector Test 2”
	Inspection condition		• Vehicle: stationary (vehicle speed 0 km/h {0 MPH}) • Engine speed: 1500 rpm or less • Transmission: neutral • The current diagnosis code does not occur.
	Requirements		Injector (No. 4 cylinder) stops injection and engine vibrations become slightly larger.
	Inspection result (Is the judging standard satisfied?)	YES	Go to transient fault (See Gr00.).
		NO	Go to step 2.

Step 2	Inspection items		Inspection by electronic control unit connector
	Maintenance item		Measure value of resistance between connector (GE96A) terminal No. 48 and 95.
	Inspection condition		Disconnect electronic control unit from harness and measure from connection side of harness connector.
	Requirements		0.255 ± 0.04 Ω (20°C {68°F})
	Inspection result (Is the judging standard satisfied?)	YES	Go to step 3.
		NO	Go to step 4.

Step 3	Inspection items		Inspection of electronic control unit connector
	Maintenance item		Inspection of connector
	Inspection condition		–
	Requirements		• Connector is properly connected. • No trace of water entry is found. • No corrosion is found in terminal. • Connection to terminal is appropriate.
	Inspection result (Is the judging standard satisfied?)	YES	Go to step 8.
		NO	Modify connector.

Step 4	Inspection items		Inspection of injector magnetic valve connector
	Maintenance item		Inspection of connector
	Inspection condition		–
	Requirements		• Connector is properly connected. • Connection to terminal is appropriate.
	Inspection result (Is the judging standard satisfied?)	YES	Go to step 5.
		NO	Modify connector.

Step 5	Inspection items		Inspection of injector magnetic valve unit
	Maintenance item		Measure value of resistance between connector terminal No. 1 and 2.
	Inspection condition		–
	Requirements		0.255 ± 0.04 Ω (20°C {68°F})
	Inspection result (Is the judging standard satisfied?)	YES	Go to step 6.
		NO	Replacement of injector

<Step 5 inspection diagram>

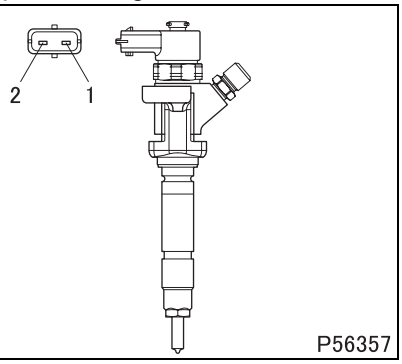

Step 6	Inspection items		Inspection of harness between injector magnetic valve and electronic control unit (power supply)
	Maintenance item		Check circuit between injector magnetic valve connector terminal No. 2 and electronic control unit connector (GE96A) terminal No. 95.
	Inspection condition		Disconnect each device from harness and measure from connection side of harness connector.
	Requirements		There is continuity.
	Inspection result (Is the judging standard satisfied?)	YES	Go to step 7.
		NO	Modify harness.

Step 7	Inspection items		Inspection of harness between injector magnetic valve and electronic control unit (ground)
	Maintenance item		Check circuit between injector magnetic valve connector terminal No. 1 and electronic control unit connector (GE96A) terminal No. 48.
	Inspection condition		Disconnect each device from harness and measure from connection side of harness connector.
	Requirements		There is continuity.
	Inspection result (Is the judging standard satisfied?)	YES	Go to step 8.
		NO	Modify harness.

Step 8	Inspection items		Inspection by control data
	Maintenance item		Perform actuator test item No. BC “Injector Test 2”
	Inspection condition		• Vehicle: stationary (vehicle speed 0 km/h {0 MPH}) • Engine speed: 1500 rpm or less • Transmission: neutral • The current diagnosis code does not occur.
	Requirements		Injector (No. 4 cylinder) stops injection and engine vibrations become slightly larger.
	Inspection result (Is the judging standard satisfied?)	YES	Go to transient fault (See Gr00.).
		NO	Replacement of electronic control unit

[Fault code]
Diagnosis code: P0271/Flash code: 39
[Monitor]
Failure of injector magnetic valve (No. 4 cylinder)
[Fault (outline)]
Injector short circuit (No. 4 cylinder)
[Diagnosis check]
- Injector magnetic valve (No. 4 cylinder) circuit is monitored for fault.

[Code generation condition]
- Injector magnetic valve (No. 4 cylinder) circuit remains shorted to power supply as detected for 3 consecutive cycles.
  (Warning lamp is lit and diagnosis code is displayed on first establishment of code generation condition.)

[Diagnosis check timing]
- Fault diagnosis is continuously performed during the driving cycle.

[Diagnostic requirement]
–

[Control effected by electronic control unit during fault]
- Injector magnetic valve (No. 1 and No. 4 cylinder) is stopped.
- Exhaust gas recirculation control is stopped.
- Throttle controls disabled
- Misfire detection is stopped.
- Auto cruise control stopped
- Diesel particulate filter regeneration is stopped.
- Turbocharger actuator test is inhibited.
- Related fault check is stopped.

[Probable cause of trouble]
- Open-circuit or short-circuit of harness between electronic control unit and injector magnetic valve
- Malfunction of each connector
- Malfunction of injector magnetic valve
- Malfunction of electronic control unit

[Recoverability]
- Recovered if signal becomes normal when starter switch is turned OFF to ON (power supply resumed to electronic control unit).
  (Warning lamp is extinguished and diagnosis code is cleared at fourth display of diagnosis code after recovery.)

[Electronic Control Unit Connection Diagram]

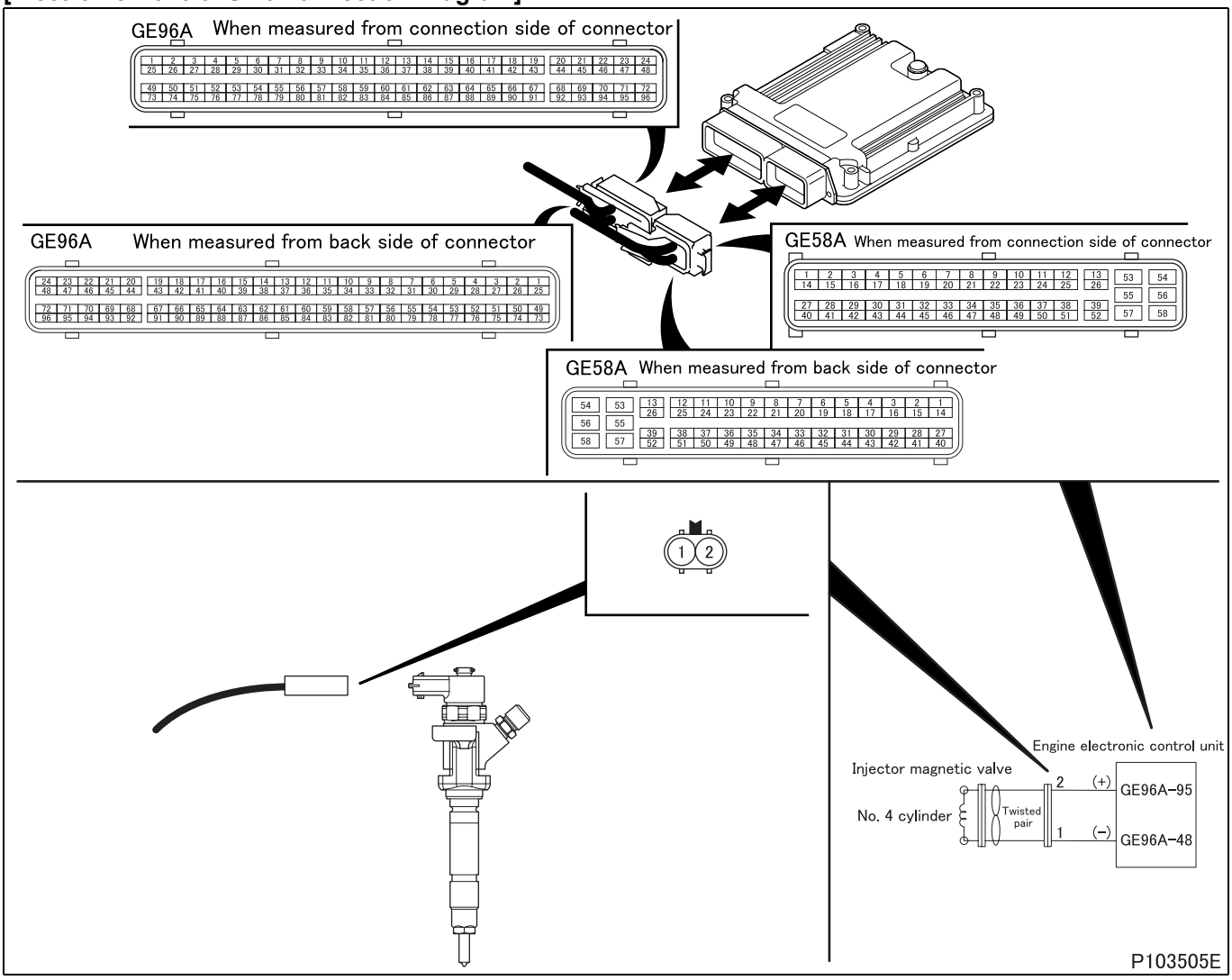

[Parts Identification and Location]

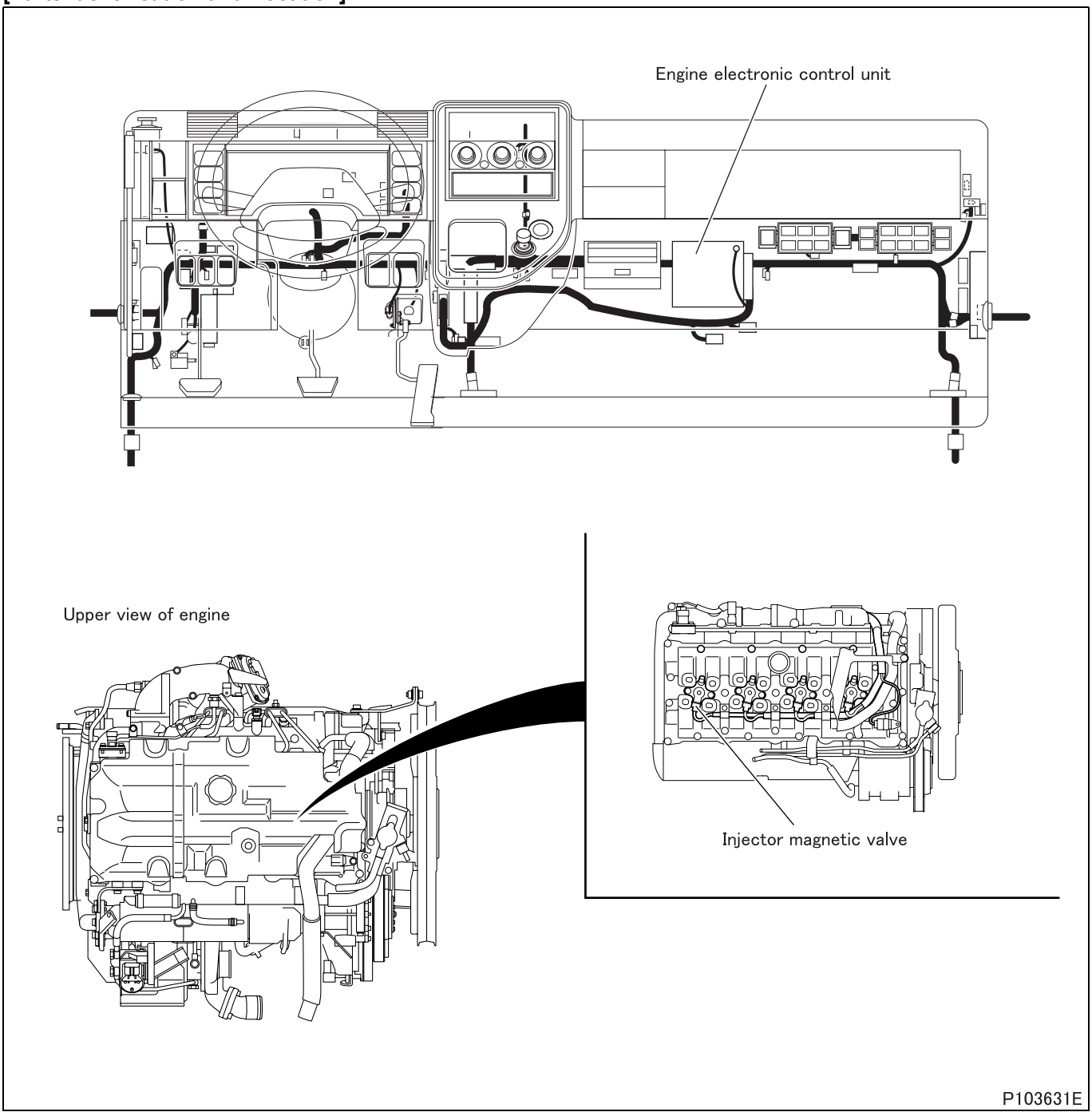

[Fault diagnosis]

- Perform checks in the sequence of the following steps.

Step 1	Inspection items		Inspection by control data
	Maintenance item		Perform actuator test item No. BC “Injector Test 2”
	Inspection condition		• Vehicle: stationary (vehicle speed 0 km/h {0 MPH}) • Engine speed: 1500 rpm or less • Transmission: neutral • The current diagnosis code does not occur.
	Requirements		Injector (No. 4 cylinder) stops injection and engine vibrations become slightly larger.
	Inspection result (Is the judging standard satisfied?)	YES	Go to transient fault (See Gr00.).
		NO	Go to step 2.

Step 2	Inspection items		Inspection by electronic control unit connector
	Maintenance item		Measure value of resistance between connector (GE96A) terminal No. 48 and 95.
	Inspection condition		Disconnect electronic control unit from harness and measure from connection side of harness connector.
	Requirements		0.255 ± 0.04 Ω (20°C {68°F})
	Inspection result (Is the judging standard satisfied?)	YES	Go to step 3.
		NO	Go to step 4.

Step 3	Inspection items		Inspection of electronic control unit connector
	Maintenance item		Inspection of connector
	Inspection condition		–
	Requirements		• Connector is properly connected. • No trace of water entry is found. • No corrosion is found in terminal. • Connection to terminal is appropriate.
	Inspection result (Is the judging standard satisfied?)	YES	Go to step 8.
		NO	Modify connector.

Step 4	Inspection items		Inspection of injector magnetic valve connector
	Maintenance item		Inspection of connector
	Inspection condition		–
	Requirements		• Connector is properly connected. • Connection to terminal is appropriate.
	Inspection result (Is the judging standard satisfied?)	YES	Go to step 5.
		NO	Modify connector.

Step 5	Inspection items		Inspection of injector magnetic valve unit
	Maintenance item		Measure value of resistance between connector terminal No. 1 and 2.
	Inspection condition		–
	Requirements		0.255 ± 0.04 Ω (20°C {68°F})
	Inspection result (Is the judging standard satisfied?)	YES	Go to step 6.
		NO	Replacement of injector

<Step 5 inspection diagram>

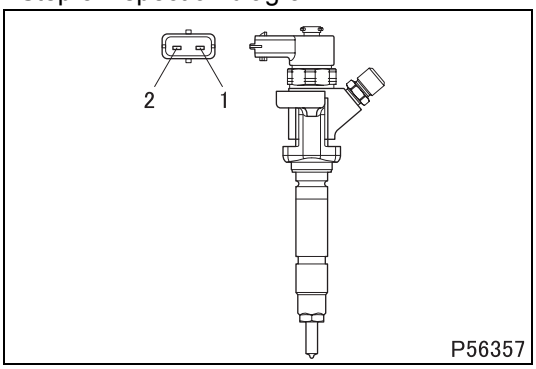

Step 6	Inspection items		Inspection of harness between injector magnetic valve and electronic control unit (power supply)
	Maintenance item		Check circuit between injector magnetic valve connector terminal No. 2 and electronic control unit connector (GE96A) terminal No. 95.
	Inspection condition		Disconnect each device from harness and measure from connection side of harness connector.
	Requirements		There is continuity.
	Inspection result (Is the judging standard satisfied?)	YES	Go to step 7.
		NO	Modify harness.

Step 7	Inspection items		Inspection of harness between injector magnetic valve and electronic control unit (ground)
	Maintenance item		Check circuit between injector magnetic valve connector terminal No. 1 and electronic control unit connector (GE96A) terminal No. 48.
	Inspection condition		Disconnect each device from harness and measure from connection side of harness connector.
	Requirements		There is continuity.
	Inspection result (Is the judging standard satisfied?)	YES	Go to step 8.
		NO	Modify harness.

Step 8	Inspection items		Inspection by control data
	Maintenance item		Perform actuator test item No. BC “Injector Test 2”
	Inspection condition		• Vehicle: stationary (vehicle speed 0 km/h {0 MPH}) • Engine speed: 1500 rpm or less • Transmission: neutral • The current diagnosis code does not occur.
	Requirements		Injector (No. 4 cylinder) stops injection and engine vibrations become slightly larger.
	Inspection result (Is the judging standard satisfied?)	YES	Go to transient fault (See Gr00.).
		NO	Replacement of electronic control unit

[Fault code]
Diagnosis code: P0272/Flash code: 53
[Monitor]
Abnormality in cylinder balance correction
[Fault (outline)]
Cylinder balancing out of range
[Diagnosis check]
- Check is made to determine if variation to correct in injection quantity between cylinders is excessive.

[Code generation condition]
- Corrected fuel injection quantity remains 5 mg/cycle or more for 10 consecutive seconds.
  (Warning lamp is lit and diagnosis code is displayed on third establishment of code generation condition.)

[Diagnosis check timing]
- Fault diagnosis is performed only once during the driving cycle.

[Diagnostic requirement]
- Water temperature: above 65°C {149°F}
- PTO status: OFF
- Cylinder balance: closed loop control

<Under closed loop control>
  - Engine speed: 630 to 820 rpm
  - Fuel injection quantity: 2 to 99 mg/cyc

- Engine operating mode: normal (engine in operation)
- Time till above conditions were met: more than 10 seconds
- The fuel balancing compensation (FBC) value for a cylinder deviates by 5 mg/cyc larger than that for any other cylinders.
- Fuel Balancing Compensation (FBC) monitor: in order
- Injector ignition: in order
- Water temperature sensor: in order
- Engine speed sensor: in order
- Cylinder recognition sensor: in order
- Battery voltage: in order
- MPROP (rail pressure control valve): in order
- Injector: in order

[Control effected by electronic control unit during fault]
- Related fault check is stopped.

[Probable cause of trouble]
- Malfunction of injector

[Recoverability]
- Recovered if signal becomes normal when starter switch is turned OFF to ON (power supply resumed to electronic control unit).
  (Warning lamp is extinguished and diagnosis code is cleared at fourth display of diagnosis code after recovery.)

[Fault diagnosis]

- Perform checks in the sequence of the following steps.

Step 1	Inspection items		Inspection by control data
	Maintenance item		Check if following diagnosis codes occur simultaneously. • P0261 “Injector #1-A (Low)” • P0262 “Injector #1-A (High)” • P0264 “Injector #2-A (Low)” • P0265 “Injector #2-A (High)” • P0267 “Injector #3-A (Low)” • P0268 “Injector #3-A (High)” • P0270 “Injector #4-A (Low)” • P0271 “Injector #4-A (High)”
	Inspection condition		• Starter switch: ON • Engine: started
	Requirements		No codes occur.
	Inspection result (Is the judging standard satisfied?)	YES	Replacement of injector (No. 4 cylinder)
		NO	Inspect diagnosis code that is occurring.

[Fault code]
Diagnosis code: P0299/Flash code: 32
[Monitor]
Underboost
[Fault (outline)]
Underboost
[Diagnosis check]
- Actual boost pressure is detected by boost pressure sensor and compared with standard pressure recorded in engine electronic control unit.

[Code generation condition]
- Difference between target boost pressure and actual boost pressure remains less than specified for 10 seconds (underboost status)
  (Warning lamp is lit and diagnosis code is displayed on third establishment of code generation condition.)

[Diagnosis check timing]
- Fault diagnosis is performed only once during the driving cycle.

[Diagnostic requirement]
- Engine operating mode: normal (engine in operation)
- Water temperature: 65 to 120°C {149 to 248°F}
- Atmospheric pressure: 828 to 1100 mbar {12 to 15.95 psi}
- Intake air temperature: –7 to 60°C {19 to 140°F}
- Engine speed: 600 to 3000 rpm
- Variation in engine speed: less than 300 rpm/s
- Diesel particulate filter regeneration control: not effected
- Exhaust gas recirculation valve: in order
- Intake throttle: in order
- Turbocharger actuator: in order
- Controller area network communication of each electronic drive unit (exhaust gas recirculation, intake throttle and turbocharger): in order
- Atmospheric pressure sensor: in order
- Boost pressure sensor: in order
- Water temperature sensor: in order
- Intake air temperature sensor: in order
- Sensor 5 V power supply: in order
- Battery voltage: in order
- MPROP (rail pressure control valve): in order
- Injector: in order
- Exhaust shutter: in order
- Exhaust gas recirculation cooler: in order
- Starter switch circuit: in order

[Control effected by electronic control unit during fault]
- Exhaust gas recirculation control is stopped.
- Throttle controls disabled
- Related fault check is stopped.

[Probable cause of trouble]
- Boost pressure incorrectly adjusted
- Mechanical failure of turbocharger unit

[Recoverability]
- Recovered if signal becomes normal when starter switch is turned OFF to ON (power supply resumed to electronic control unit).
  (Warning lamp is extinguished and diagnosis code is cleared at fourth display of diagnosis code after recovery.)

[Fault diagnosis]

- Perform checks in the sequence of the following steps.

Step 1	Inspection items		Inspection by control data
	Maintenance item		Check if following diagnosis codes occur simultaneously. • P0045 “VGT Acutuator (Open)” • P0046 “VGT Acutuator (Performance)” • P0047 “VGT Acutuator (Low)” • P0069 “Boost Press SNSR (Correlation)” • P0237 “Boost Press SNSR (Low)” • P0238 “Boost Press SNSR (High)” • P0401 “EGR Flow (Insufficient)” • P0402 “EGR Flow (Excessive)” • P0403 “EGR1 (Acutuator Circuit)” • P0409 “EGR1 (Position Sensor)” • P0562 “Power Supply Voltage (Low)” • P0563 “Power Supply Voltage (High)” • P0600 “CAN Communication” • P0607 “ECU System” • P060B “A/D Converter” • P061B “ECU Performance (Calc)” • P061C “ECU Performance (Ne)” • P0685 “EDU Relay (Open)” • P0686 “EDU Relay (Low)” • P0687 “EDU Relay (High)” • P2002 “DPF MFF” • P2228 “Atm Press SNSR (Low)” • P2229 “Atm Press SNSR (High)” • P2263 “VGT System” • P2413 “EGR System” • P2453 “DPF Diff SNSR (Plausi) & MFF” • P2454 “DPF Diff SNSR (Low) & MFF” • P2455 “DPF Diff SNSR (High) & MFF” • P2457 “EGR Cooler Performance”
	Inspection condition		• Starter switch: ON • Do not start engine.
	Requirements		Codes occur.
	Inspection result (Is the judging standard satisfied?)	YES	Inspect diagnosis code that is occurring.
		NO	Go to step 2.

Step 2	Inspection items		Check of exhaust system
	Maintenance item		Front pipe, diesel particulate filter, tail pipe (See Gr15.)
	Inspection condition		Starter switch: OFF
	Requirements		Blocked
	Inspection result (Is the judging standard satisfied?)	YES	Clean or replace parts.
		NO	Go to step 3.

Step 3	Inspection items		Check of turbocharger appearance
	Maintenance item		Appearance of turbocharger (See Gr15.)
	Inspection condition		Starter switch: OFF
	Requirements		Turbine vane binds.
	Inspection result (Is the judging standard satisfied?)	YES	Replacement of turbocharger
		NO	Go to step 4.

Step 4	Inspection items		Inspection by control data
	Maintenance item		**<General Scanning Tool used>** • Measure item “Intake MAP”. **<Multi-Use Tester used>** • Measure item No. 21 “Boost Pressure” of Service Data.
	Inspection condition		For boost pressure measurement and correction data calculation, see Gr15.
	Requirements		Coincides with atmospheric pressure → Gradually increases
	Inspection result (Is the judging standard satisfied?)	YES	Go to transient fault (See Gr00.).
		NO	Replacement of turbocharger

[Fault code]
Diagnosis code: P0300/Flash code: 45
[Monitor]
Cylinder misfire (multiple cylinders)
[Fault (outline)]
Misfire multiple cylinders
[Diagnosis check]
- Misfire is detected at two or more cylinders

[Code generation condition]
- Misfire in one cylinder is detected after another.
  (Warning lamp is lit and diagnosis code is displayed on third establishment of code generation condition.)

[Diagnosis check timing]
- Fault diagnosis is performed only once during the driving cycle.

[Diagnostic requirement]
- Misfire in one cylinder

[Control effected by electronic control unit during fault]
- Related fault check is stopped.

[Probable cause of trouble]
- Malfunction of injector
- Malfunction of electronic control unit
- Malfunction of fuel
- Malfunction of engine compression pressure

[Recoverability]
- Recovered if signal becomes normal when starter switch is turned OFF to ON (power supply resumed to electronic control unit).
  (Warning lamp is extinguished and diagnosis code is cleared at fourth display of diagnosis code after recovery.)

[Fault code]
Diagnosis code: P0301/Flash code: 45
[Monitor]
Cylinder misfire (individual cylinders)
[Fault (outline)]
Misfire individual cylinder 1
[Diagnosis check]
- Misfire at No. 1 cylinder is detected.

[Code generation condition]
- Misfire has been detected for a total of 250 times.
  (Warning lamp is lit and diagnosis code is displayed on third establishment of code generation conditions.)

[Diagnosis check timing]
- Fault diagnosis is performed only once during the driving cycle.

[Diagnostic requirement]
- Engine speed: 600 to 900 rpm
- Fuel injection quantity: 3 to 25 mg/cyc
- Water temperature: above 64°C {147°F}
- Vehicle speed: less than 2 km/h {1.24 MPH}
- Engine operating mode: normal (engine in operation)
- PTO status: OFF
- Water temperature sensor: in order
- Engine speed sensor: in order
- Cylinder recognition sensor: in order
- Battery voltage: in order
- MPROP (rail pressure control valve): in order
- Injector: in order
- Vehicle speed sensor: in order

[Control effected by electronic control unit during fault]
- Related fault check is stopped.

[Probable cause of trouble]
- Malfunction of injector
- Malfunction of electronic control unit
- Malfunction of fuel
- Malfunction of engine compression pressure

[Recoverability]
- Recovered if signal becomes normal when starter switch is turned OFF to ON (power supply resumed to electronic control unit).
  (Warning lamp is extinguished and diagnosis code is cleared at fourth display of diagnosis code after recovery.)

[Fault code]
Diagnosis code: P0302/Flash code: 45
[Monitor]
Cylinder misfire (individual cylinders)
[Fault (outline)]
Misfire individual cylinder 2
[Diagnosis check]
- Misfire at No. 2 cylinder is detected.

[Code generation condition]
- Misfire has been detected for a total of 250 times. (Warning lamp is lit and diagnosis code is displayed on third establishment of code generation conditions.)

[Diagnosis check timing]
- Fault diagnosis is performed only once during the driving cycle.

[Diagnostic requirement]
- Engine speed: 600 to 900 rpm
- Fuel injection quantity: 3 to 25 mg/cyc
- Water temperature: above 64°C {147°F}
- Vehicle speed: less than 2 km/h {1.24 MPH}
- Engine operating mode: normal (engine in operation)
- PTO status: OFF
- Water temperature sensor: in order
- Engine speed sensor: in order
- Cylinder recognition sensor: in order
- Battery voltage: in order
- MPROP (rail pressure control valve): in order
- Injector: in order
- Vehicle speed sensor: in order

[Control effected by electronic control unit during fault]
- Related fault check is stopped.

[Probable cause of trouble]
- Malfunction of injector
- Malfunction of electronic control unit
- Malfunction of fuel
- Malfunction of engine compression pressure

[Recoverability]
- Recovered if signal becomes normal when starter switch is turned OFF to ON (power supply resumed to electronic control unit).
  (Warning lamp is extinguished and diagnosis code is cleared at fourth display of diagnosis code after recovery.)

[Fault code]
Diagnosis code: P0303/Flash code: 45
[Monitor]
Cylinder misfire (individual cylinders)
[Fault (outline)]
Misfire individual cylinder 3
[Diagnosis check]
- Misfire at No. 3 cylinder is detected.

[Code generation condition]
- Misfire has been detected for a total of 250 times. (Warning lamp is lit and diagnosis code is displayed on third establishment of code generation conditions.)

[Diagnosis check timing]
- Fault diagnosis is performed only once during the driving cycle.

[Diagnostic requirement]
- Engine speed: 600 to 900 rpm
- Fuel injection quantity: 3 to 25 mg/cyc
- Water temperature: above 64°C {147°F}
- Vehicle speed: less than 2 km/h {1.24 MPH}
- Engine operating mode: normal (engine in operation)
- PTO status: OFF
- Water temperature sensor: in order
- Engine speed sensor: in order
- Cylinder recognition sensor: in order
- Battery voltage: in order
- MPROP (rail pressure control valve): in order
- Injector: in order
- Vehicle speed sensor: in order

[Control effected by electronic control unit during fault]
- Related fault check is stopped.

[Probable cause of trouble]
- Malfunction of injector
- Malfunction of electronic control unit
- Malfunction of fuel
- Malfunction of engine compression pressure

[Recoverability]
- Recovered if signal becomes normal when starter switch is turned OFF to ON (power supply resumed to electronic control unit).
  (Warning lamp is extinguished and diagnosis code is cleared at fourth display of diagnosis code after recovery.)

[Fault code]
Diagnosis code: P0304/Flash code: 45
[Monitor]
Cylinder misfire (individual cylinders)
[Fault (outline)]
Misfire individual cylinder 4
[Diagnosis check]
- Misfire at No. 4 cylinder is detected.

[Code generation condition]
- Misfire has been detected for a total of 250 times. (Warning lamp is lit and diagnosis code is displayed on third establishment of code generation conditions.)

[Diagnosis check timing]
- Fault diagnosis is performed only once during the driving cycle.

[Diagnostic requirement]
- Engine speed: 600 to 900 rpm
- Fuel injection quantity: 3 to 25 mg/cyc
- Water temperature: above 64°C {147°F}
- Vehicle speed: less than 2 km/h {1.24 MPH}
- Engine operating mode: normal (engine in operation)
- PTO status: OFF
- Water temperature sensor: in order
- Engine speed sensor: in order
- Cylinder recognition sensor: in order
- Battery voltage: in order
- MPROP (rail pressure control valve): in order
- Injector: in order
- Vehicle speed sensor: in order

[Control effected by electronic control unit during fault]
- Related fault check is stopped.

[Probable cause of trouble]
- Malfunction of injector
- Malfunction of electronic control unit
- Malfunction of fuel
- Malfunction of engine compression pressure

[Recoverability]
- Recovered if signal becomes normal when starter switch is turned OFF to ON (power supply resumed to electronic control unit).
  (Warning lamp is extinguished and diagnosis code is cleared at fourth display of diagnosis code after recovery.)

[Fault code]
Diagnosis code: P0335/Flash code: 15
[Monitor]
Failure of engine speed sensor
[Fault (outline)]
No pulse check
[Diagnosis check]
- Engine speed sensor output signal during engine operation is monitored.

[Code generation condition]
- No signal is received from engine speed sensor during engine operation.
  (Warning lamp is lit and diagnosis code is displayed on first establishment of code generation condition.)

[Diagnosis check timing]
- Fault diagnosis is performed only once during the driving cycle.

[Diagnostic requirement]
- Engine operating mode: normal (engine in operation)

[Control effected by electronic control unit during fault]
- Control is effected using cylinder recognition sensor only.
- Misfire detection is stopped.
- Engine torque is limited.
- Auto cruise control stopped
- Related fault check is stopped.

[Probable cause of trouble]
- Open-circuit or short-circuit of harness between electronic control unit and engine speed sensor
- Malfunction of each connector
- Malfunction of sensor
- Malfunction of electronic control unit

[Recoverability]
- Recovered if signal becomes normal with starter switch in ON position.
  (Warning lamp is extinguished and diagnosis code is cleared at fourth display of diagnosis code after recovery.)

[Electronic Control Unit Connection Diagram]

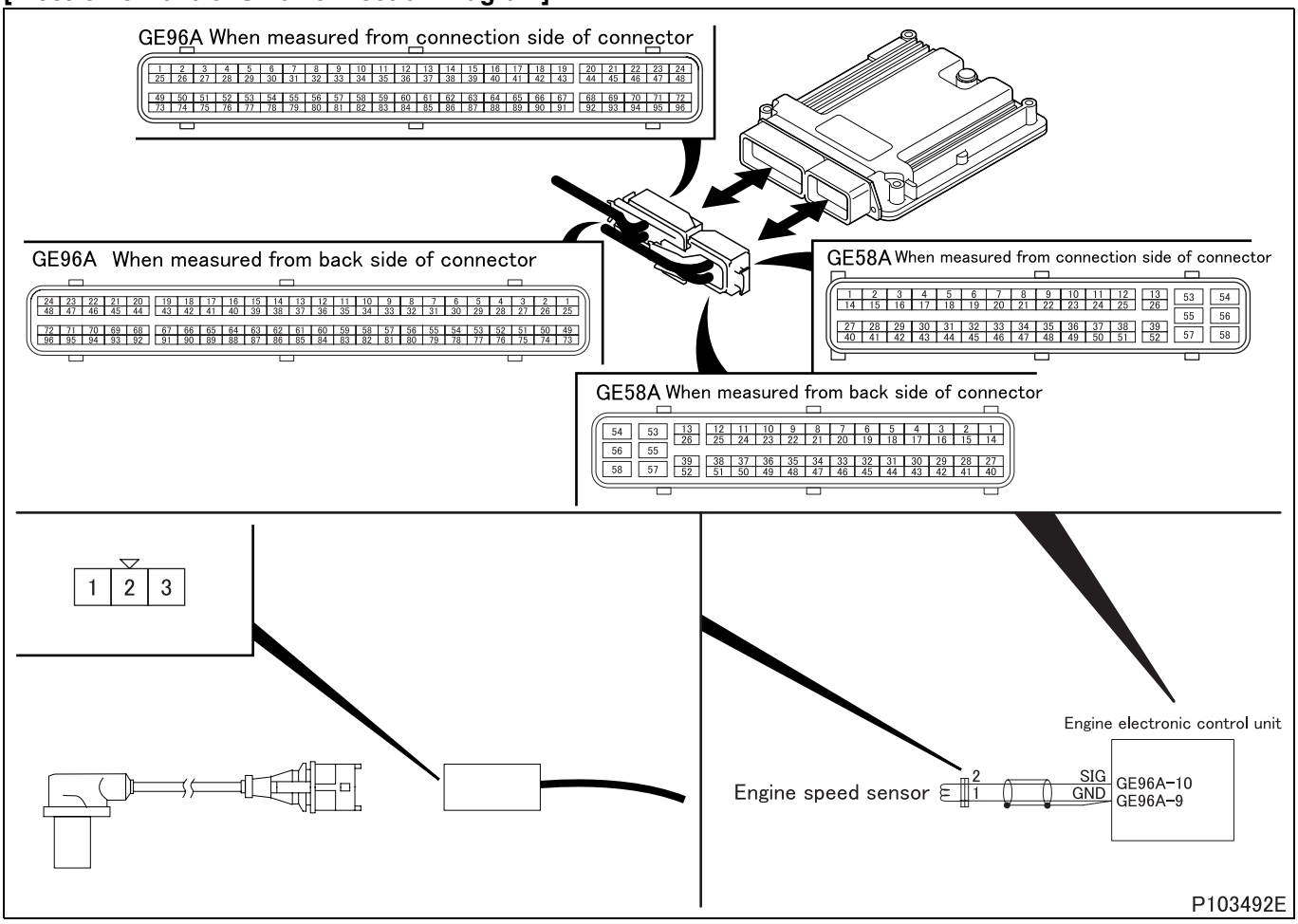

[Parts Identification and Location]

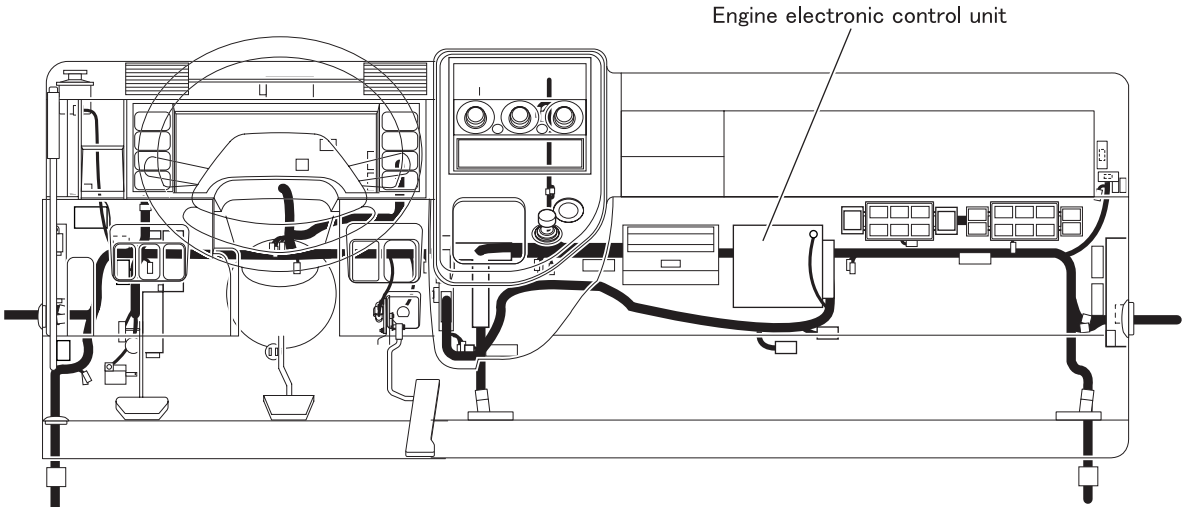

Left side view of transmission

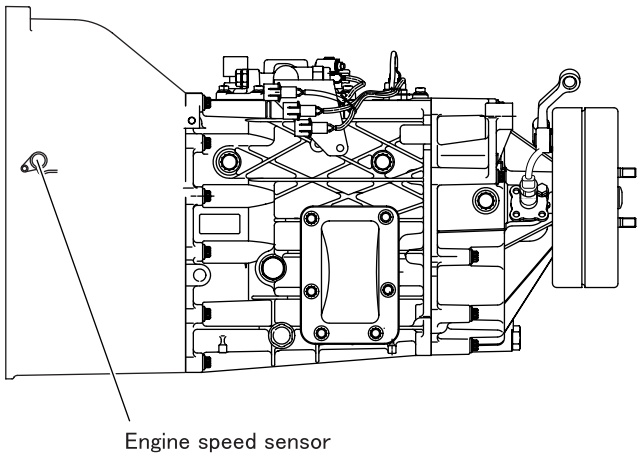

P103620E

[Fault diagnosis]

- Perform checks in the sequence of the following steps.

Step 1	Inspection items		Inspection by control data
	Maintenance item		**<General Scanning Tool used>** • Measure item “Ne” . **<Multi-Use Tester used>** • Measure item No. 01 “Engine Revolution” of Service Data.
	Inspection condition		–
	Requirements		Same indication as tachometer is given.
	Inspection result (Is the judging standard satisfied?)	YES	Go to transient fault (See Gr00.).
		NO	Go to step 2.

Step 2	Inspection items		Inspection by electronic control unit connector
	Maintenance item		Measure value of resistance between connector (GE96A) terminal No. 9 and 10.
	Inspection condition		Disconnect electronic control unit from harness and measure from connection side of harness connector.
	Requirements		860 ± 86 Ω (20°C {68°F})
	Inspection result (Is the judging standard satisfied?)	YES	Go to step 3.
		NO	Go to step 4.

Step 3	Inspection items		Inspection of electronic control unit connector
	Maintenance item		Inspection of connector
	Inspection condition		–
	Requirements		• Connector is properly connected. • No trace of water entry is found. • No corrosion is found in terminal. • Connection to terminal is appropriate.
	Inspection result (Is the judging standard satisfied?)	YES	Go to step 8.
		NO	Modify connector.

Step 4	Inspection items		Inspection of engine speed sensor connector
	Maintenance item		Inspection of connector
	Inspection condition		–
	Requirements		• Connector is properly connected. • No trace of water entry is found. • No corrosion is found in terminal. • Connection to terminal is appropriate.
	Inspection result (Is the judging standard satisfied?)	YES	Go to step 5.
		NO	Modify connector.

Step 5	Inspection items		Inspection of engine speed sensor unit
	Maintenance item		Measure value of resistance between connector terminal No. 1 and 2.
	Inspection condition		–
	Requirements		860 ± 86 Ω (20°C {68°F})
	Inspection result (Is the judging standard satisfied?)	YES	Go to step 6.
		NO	Replacement of sensor

<Step 5 inspection diagram>

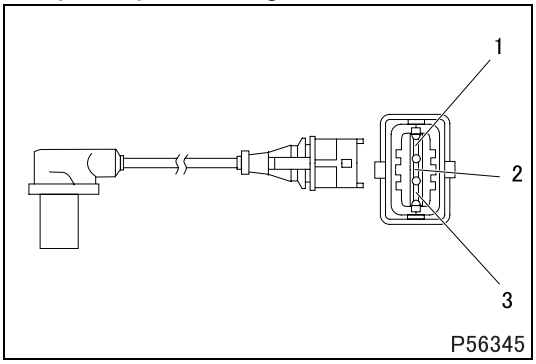

Step 6	Inspection items		Inspection of harness between electronic control unit and sensor (power supply)
	Maintenance item		Check circuit between sensor connector terminal No. 2 and electronic control unit connector (GE96A) terminal No. 10.
	Inspection condition		Disconnect each device from harness and measure from connection side of harness connector.
	Requirements		There is continuity.
	Inspection result (Is the judging standard satisfied?)	YES	Go to step 7.
		NO	Modify harness.

Step 7	Inspection items		Inspection of harness between electronic control unit and sensor (ground)
	Maintenance item		Check circuit between sensor connector terminal No. 1 and electronic control unit connector (GE96A) terminal No. 9.
	Inspection condition		Disconnect each device from harness and measure from connection side of harness connector.
	Requirements		There is continuity.
	Inspection result (Is the judging standard satisfied?)	YES	Go to step 8.
		NO	Modify harness.

Step 8	Inspection items		Inspection by control data
	Maintenance item		**<General Scanning Tool used>** • Measure item “Ne”. **<Multi-Use Tester used>** • Measure item No. 01 “Engine Revolution” of Service Data.
	Inspection condition		–
	Requirements		Same indication as tachometer is given.
	Inspection result (Is the judging standard satisfied?)	YES	Go to transient fault (See Gr00.).
		NO	Replacement of electronic control unit

[Fault code]
Diagnosis code: P0339/Flash code: 15
[Monitor]
Failure of engine speed sensor
[Fault (outline)]
Abnormality of pulse count
[Diagnosis check]
- Output pulses from engine speed sensor during engine operation are counted on basis of output signal from normal cylinder recognition sensor.

[Code generation condition]
Diagnosis code is generated under either of the following conditions.
<Condition (1)>
- Engine speed output from engine speed sensor remains over 6000 rpm for 10 seconds.
  (Warning lamp (red) is lit and diagnosis code is displayed on first establishment of code generation condition.)

<Condition (2)>
- Engine speed remains below 300 rpm for 6 seconds during backup.
  (Warning lamp (orange) is lit and diagnosis code is displayed on first establishment of code generation condition.)

[Diagnosis check timing]
- Fault diagnosis is performed only once during the driving cycle.

[Diagnostic requirement]
- Engine operating mode: starting
- Engine speed: more than 500 rpm
- Engine speed: less than 400 rpm

[Control effected by electronic control unit during fault]
Electronic control unit varies in the way of control by the color of warning lamp.
<Warning lamp: Orange>
- Effects no special control.

<Warning lamp: Red>
- Control is effected using cylinder recognition sensor only.
- Misfire detection is stopped.
- Engine torque is limited.
- Auto cruise control stopped
- Related fault check is stopped.

[Probable cause of trouble]
- Open-circuit or short-circuit of harness between electronic control unit and engine speed sensor
- Malfunction of each connector
- Malfunction of sensor
- Malfunction of electronic control unit

[Recoverability]
- Recovered if signal becomes normal when starter switch is turned OFF to ON (power supply resumed to electronic control unit).
  (Timing of warning lamp/diagnosis code OFF depends on condition.)

<Condition (1)>
- Lamp is extinguished and code is cleared at fourth diagnosis code display after recovery.

<Condition (2)>
- Lamp is extinguished and code is cleared simultaneously with recovery.

[Electronic Control Unit Connection Diagram]

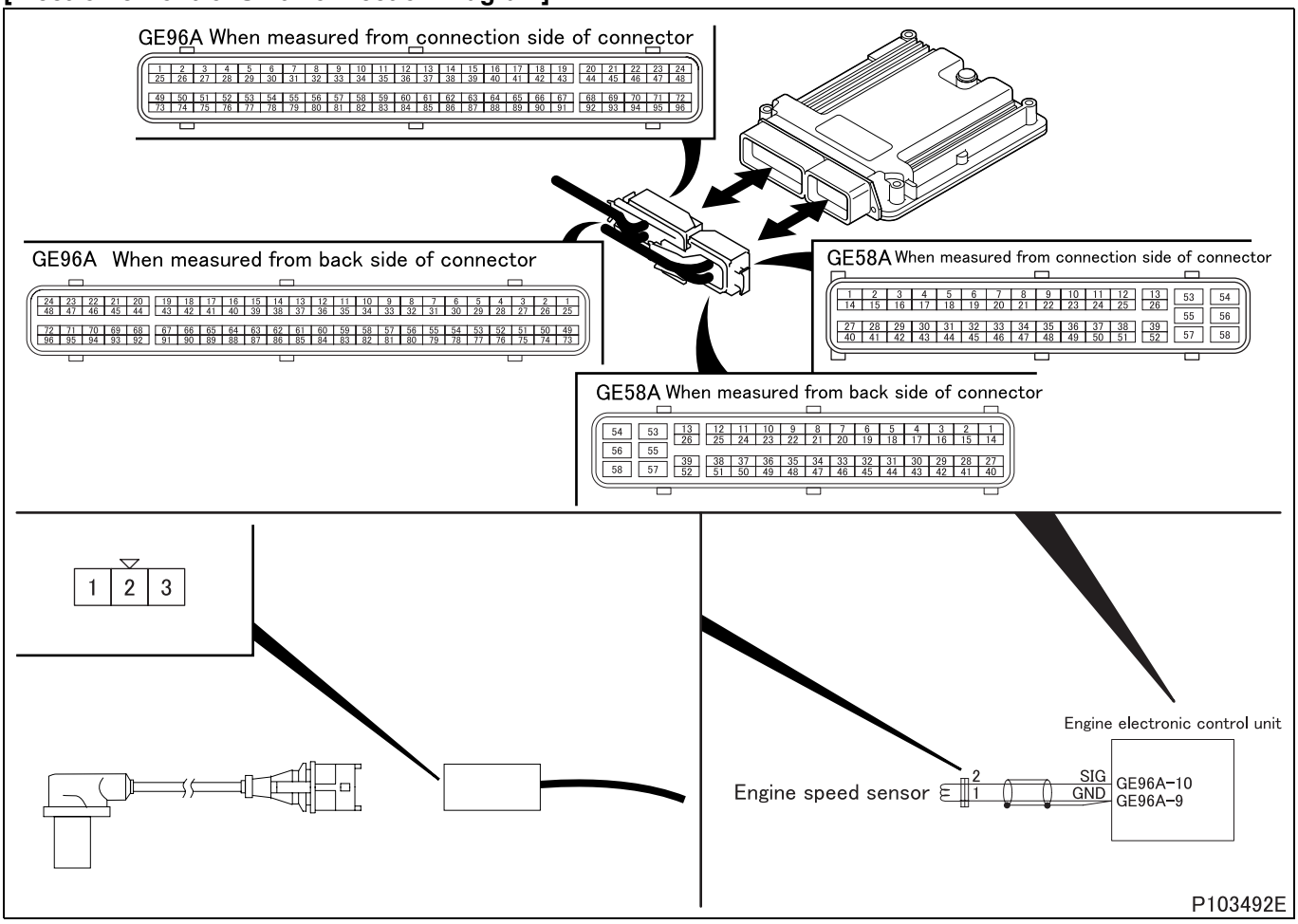

[Parts Identification and Location]

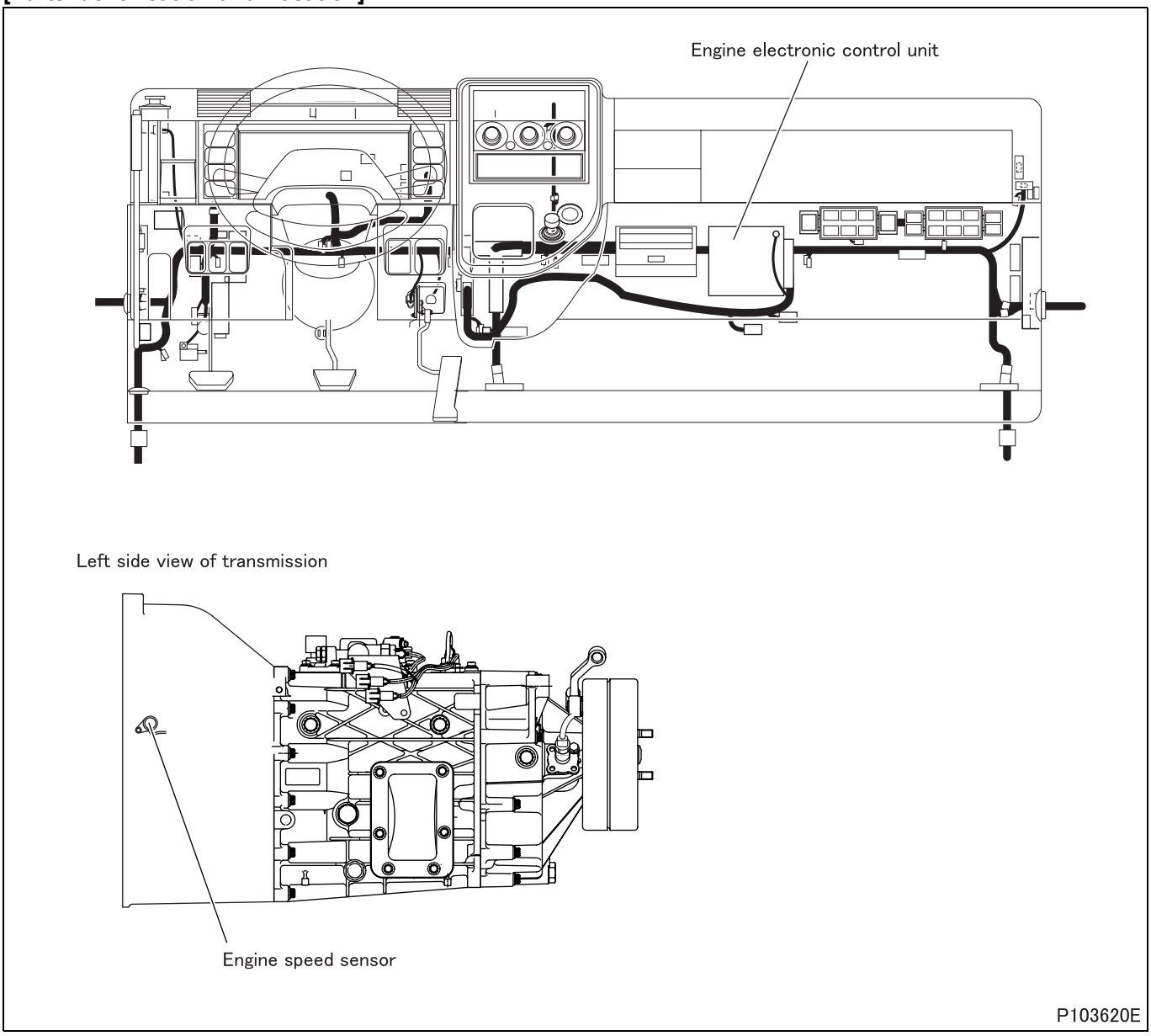

[Fault diagnosis]

- Perform checks in the sequence of the following steps.

Step 1	Inspection items		Inspection by control data
	Maintenance item		**<General Scanning Tool used>** • Measure item “Ne”. **<Multi-Use Tester used>** • Measure item No. 01 “Engine Revolution” of Service Data.
	Inspection condition		–
	Requirements		Same indication as tachometer is given.
	Inspection result (Is the judging standard satisfied?)	YES	Go to transient fault (See Gr00.).
		NO	Go to step 2.

Step 2	Inspection items		Inspection by electronic control unit connector
	Maintenance item		Measure value of resistance between connector (GE96A) terminal No. 9 and 10.
	Inspection condition		Disconnect electronic control unit from harness and measure from connection side of harness connector.
	Requirements		860 ± 86 Ω (20°C {68°F})
	Inspection result (Is the judging standard satisfied?)	YES	Go to step 3.
		NO	Go to step 4.

Step 3	Inspection items		Inspection of electronic control unit connector
	Maintenance item		Inspection of connector
	Inspection condition		–
	Requirements		• Connector is properly connected. • No trace of water entry is found. • No corrosion is found in terminal. • Connection to terminal is appropriate.
	Inspection result (Is the judging standard satisfied?)	YES	Go to step 8.
		NO	Modify connector.

Step 4	Inspection items		Inspection of engine speed sensor connector
	Maintenance item		Inspection of connector
	Inspection condition		–
	Requirements		• Connector is properly connected. • No trace of water entry is found. • No corrosion is found in terminal. • Connection to terminal is appropriate.
	Inspection result (Is the judging standard satisfied?)	YES	Go to step 5.
		NO	Modify connector.

Step 5	Inspection items		Inspection of engine speed sensor unit
	Maintenance item		Measure value of resistance between connector terminal No. 1 and 2.
	Inspection condition		–
	Requirements		860 ± 86 Ω (20°C {68°F})
	Inspection result (Is the judging standard satisfied?)	YES	Go to step 6.
		NO	Replacement of sensor

<Step 5 inspection diagram>

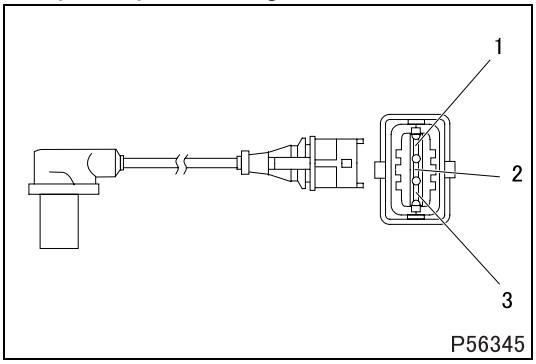

Step 6	Inspection items		Inspection of harness between electronic control unit and sensor (power supply)
	Maintenance item		Check circuit between sensor connector terminal No. 2 and electronic control unit connector (GE96A) terminal No. 10.
	Inspection condition		Disconnect each device from harness and measure from connection side of harness connector.
	Requirements		There is continuity.
	Inspection result (Is the judging standard satisfied?)	YES	Go to step 7.
		NO	Modify harness.

Step 7	Inspection items		Inspection of harness between electronic control unit and sensor (ground)
	Maintenance item		Check circuit between sensor connector terminal No. 1 and electronic control unit connector (GE96A) terminal No. 9.
	Inspection condition		Disconnect each device from harness and measure from connection side of harness connector.
	Requirements		There is continuity.
	Inspection result (Is the judging standard satisfied?)	YES	Go to step 8.
		NO	Modify harness.

Step 8	Inspection items		Inspection by control data
	Maintenance item		**<General Scanning Tool used>** • Measure item “Ne”. **<Multi-Use Tester used>** • Measure item No. 01 “Engine Revolution” of Service Data.
	Inspection condition		–
	Requirements		Same indication as tachometer is given.
	Inspection result (Is the judging standard satisfied?)	YES	Go to transient fault (See Gr00.).
		NO	Replacement of electronic control unit

[Fault code]
Diagnosis code: P0340/Flash code: 12
[Monitor]
Failure of cylinder recognition sensor
[Fault (outline)]
No pulse check
[Diagnosis check]
- Output pulses from engine speed sensor are counted to check pulse output from cylinder recognition sensor during engine operation.

[Code generation condition]
- No pulse is output from cylinder recognition sensor despite more than 132 pulses from engine speed sensor at engine start. (Warning lamp is lit and diagnosis code is displayed on first establishment of code generation condition.)

[Diagnosis check timing]
- Fault diagnosis is performed only once during the driving cycle.

[Diagnostic requirement]
- Starter switch: ON
- Engine speed: more than 20 rpm

[Control effected by electronic control unit during fault]
- Control is effected with engine speed sensor only.
- Misfire detection is stopped.
- Auto cruise control stopped
- Related fault check is stopped.

[Probable cause of trouble]
- Open-circuit or short-circuit of harness between electronic control unit and engine speed sensor
- Malfunction of each connector
- Malfunction of sensor
- Malfunction of electronic control unit

[Recoverability]
- Recovered if signal becomes normal with starter switch in ON position.
  (Warning lamp is extinguished and diagnosis code is cleared at fourth display of diagnosis code after recovery.)

[Electronic Control Unit Connection Diagram]

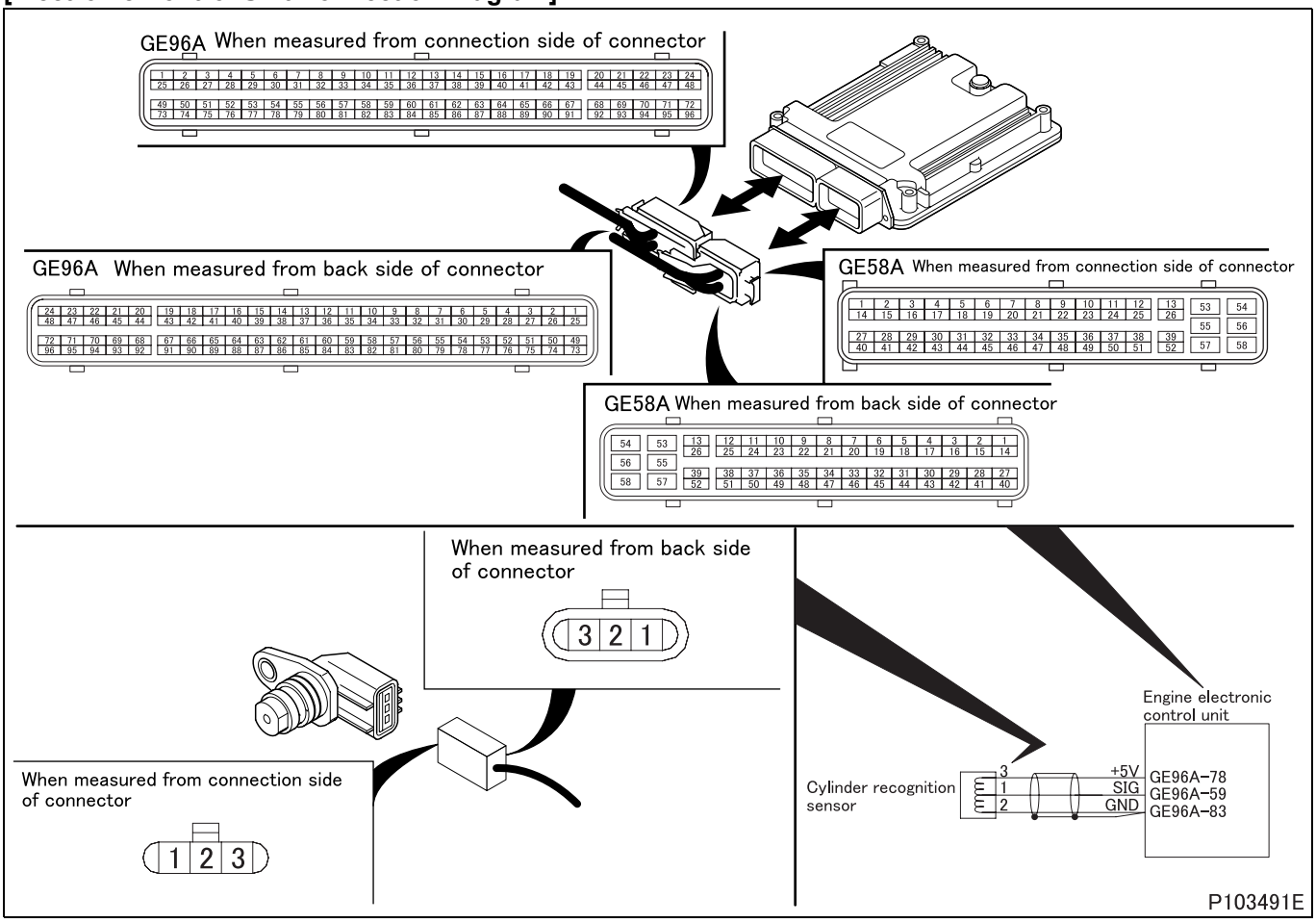

[Parts Identification and Location]

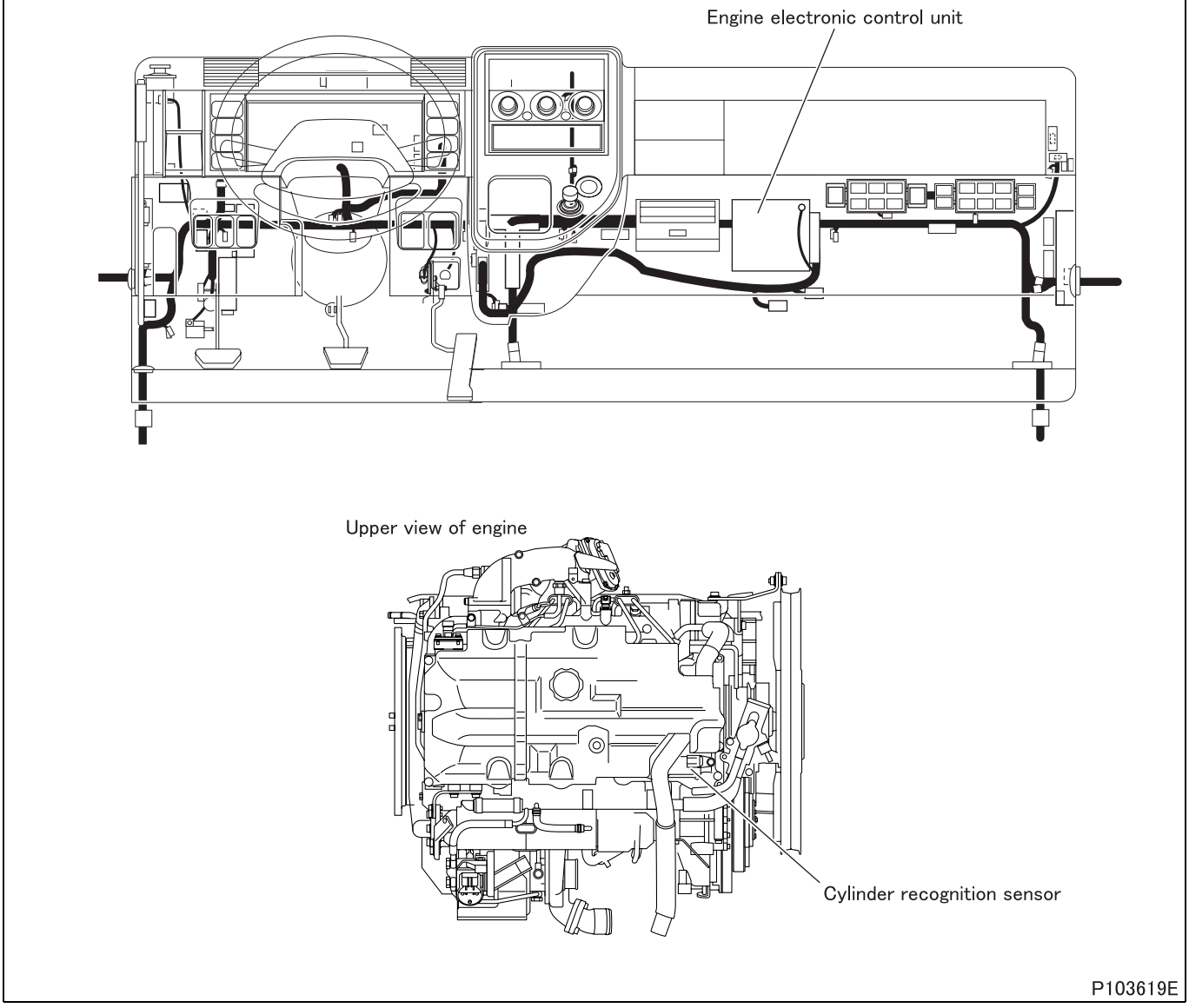

[Fault diagnosis]

- Perform checks in the sequence of the following steps.

Step 1	Inspection items		Inspection by control data
	Maintenance item		**<General Scanning Tool used>** • Measure item “Ne”. **<Multi-Use Tester used>** • Measure item No. 01 “Engine Revolution” of Service Data.
	Inspection condition		–
	Requirements		Same indication as tachometer is given.
	Inspection result (Is the judging standard satisfied?)	YES	Go to transient fault (See Gr00.).
		NO	Go to step 2.

Step 2	Inspection items		Inspection by electronic control unit connector (signal)
	Maintenance item		Measure value of voltage between connector (GE96A) terminal No. 59 (+) and 83 (–).
	Inspection condition		• Measure from back side of connector of harness with each device connected to harness. • Starter switch: ON
	Requirements		1 V or more
	Inspection result (Is the judging standard satisfied?)	YES	Go to step 5.
		NO	Go to step 3.

Step 3	Inspection items		Inspection by electronic control unit connector (power supply)
	Maintenance item		Measure value of voltage between connector (GE96A) terminal No. 78 (+) and 83 (–).
	Inspection condition		• Measure from back side of connector of harness with each device connected to harness. • Starter switch: ON
	Requirements		5 V
	Inspection result (Is the judging standard satisfied?)	YES	Go to step 4.
		NO	Go to step 5.

Step 4	Inspection items		Inspection by electronic control unit connector (ground)
	Maintenance item		Measure value of voltage between connector (GE96A) terminal No. 83 (+) and 53 (–).
	Inspection condition		• Measure from back side of connector of harness with each device connected to harness. • Starter switch: ON
	Requirements		0 V
	Inspection result (Is the judging standard satisfied?)	YES	Go to step 6.
		NO	Go to step 5.

Step 5	Inspection items		Inspection of electronic control unit connector
	Maintenance item		Inspection of connector
	Inspection condition		–
	Requirements		• Connector is properly connected. • No trace of water entry is found. • No corrosion is found in terminal. • Connection to terminal is appropriate.
	Inspection result (Is the judging standard satisfied?)	YES	Go to step 12.
		NO	Modify connector.

Step 6	Inspection items		Inspection of sensor connector
	Maintenance item		Inspection of connector
	Inspection condition		–
	Requirements		• Connector is properly connected. • No trace of water entry is found. • No corrosion is found in terminal. • Connection to terminal is appropriate.
	Inspection result (Is the judging standard satisfied?)	YES	Go to step 7.
		NO	Modify connector.

Step 7	Inspection items		Inspection of sensor unit
	Maintenance item		Measure value of resistance between connector terminal No. 2 and 3.
	Inspection condition		–
	Requirements		200 to 1800 Ω
	Inspection result (Is the judging standard satisfied?)	YES	Go to step 8.
		NO	Replacement of sensor

<Step 7 inspection diagram>

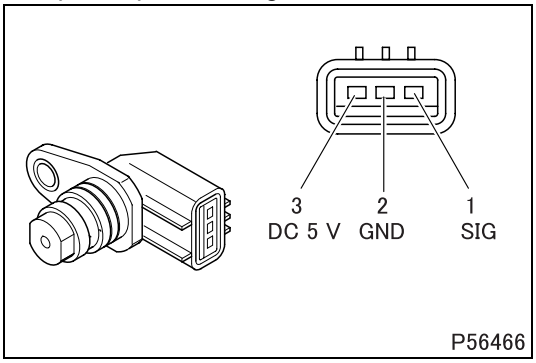

Step 8	Inspection items		Inspection of harness between electronic control unit and sensor (power supply)
	Maintenance item		Measure value of voltage between sensor connector terminal No. 3 (+) and 2 (–).
	Inspection condition		• Remove connector and measure from harness side. • Starter switch: ON
	Requirements		5 V
	Inspection result (Is the judging standard satisfied?)	YES	Go to step 10.
		NO	Go to step 9.

Step 9	Inspection items		Inspection of harness between electronic control unit and sensor (power supply)
	Maintenance item		Check circuit between sensor connector terminal No. 3 and electronic control unit connector (GE96A) terminal No. 78.
	Inspection condition		Disconnect each device from harness and measure from connection side of harness connector.
	Requirements		There is continuity.
	Inspection result (Is the judging standard satisfied?)	YES	Go to step 12.
		NO	Modify harness.

Step 10	Inspection items		Inspection of harness between electronic control unit and sensor (ground)
	Maintenance item		Check circuit between sensor connector terminal No. 2 and electronic control unit connector (GE96A) terminal No. 83.
	Inspection condition		Disconnect each device from harness and measure from connection side of harness connector.
	Requirements		There is continuity.
	Inspection result (Is the judging standard satisfied?)	YES	Go to step 11.
		NO	Modify harness.

Step 11	Inspection items		Inspection of harness between electronic control unit and sensor (signal)
	Maintenance item		Check circuit between sensor connector terminal No. 1 and electronic control unit connector (GE96A) terminal No. 59.
	Inspection condition		Disconnect each device from harness and measure from connection side of harness connector.
	Requirements		There is continuity.
	Inspection result (Is the judging standard satisfied?)	YES	Go to step 12.
		NO	Modify harness.

Step 12	Inspection items		Inspection by control data
	Maintenance item		**<General Scanning Tool used>** • Measure item “Ne”. **<Multi-Use Tester used>** • Measure item No. 01 “Engine Revolution” of Service Data.
	Inspection condition		–
	Requirements		Same indication as tachometer is given.
	Inspection result (Is the judging standard satisfied?)	YES	Go to transient fault (See Gr00.).
		NO	Replacement of electronic control unit

[Fault code]
Diagnosis code: P0344/Flash code: 12
[Monitor]
Failure of cylinder recognition sensor
[Fault (outline)]
Abnormality of pulse count
[Diagnosis check]
- Output pulses from cylinder recognition sensor during engine operation are counted.

[Code generation condition]
- Number of output pulses from cylinder recognition sensor at engine start exceeds 240.
  (Warning lamp is lit and diagnosis code is displayed on first establishment of code generation condition.)

[Diagnosis check timing]
- Fault diagnosis is continuously performed during the driving cycle.

[Diagnostic requirement]
- Starter switch: ON
- Engine speed: more than 20 rpm

[Control effected by electronic control unit during fault]
- Control is effected with engine speed sensor only.
- Misfire detection is stopped.
- Auto cruise control stopped
- Related fault check is stopped.

[Probable cause of trouble]
- Open-circuit or short-circuit of harness between electronic control unit and sensor
- Malfunction of each connector
- Malfunction of sensor
- Malfunction of electronic control unit

[Recoverability]
- Recovered if signal becomes normal when starter switch is turned OFF to ON (power supply resumed to electronic control unit).
  (Warning lamp is extinguished and diagnosis code is cleared at fourth display of diagnosis code after recovery.)

[Electronic Control Unit Connection Diagram]

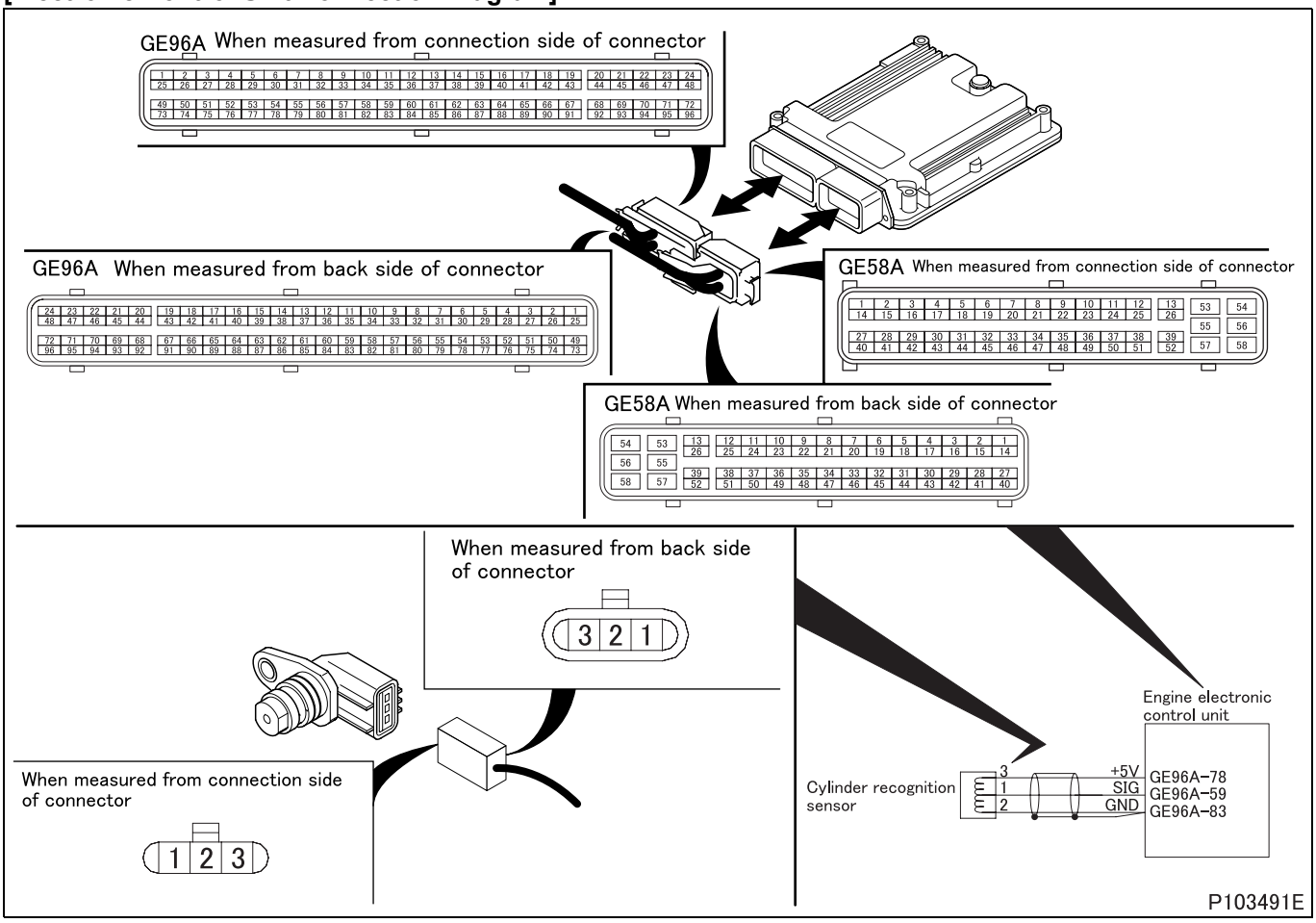

[Parts Identification and Location]

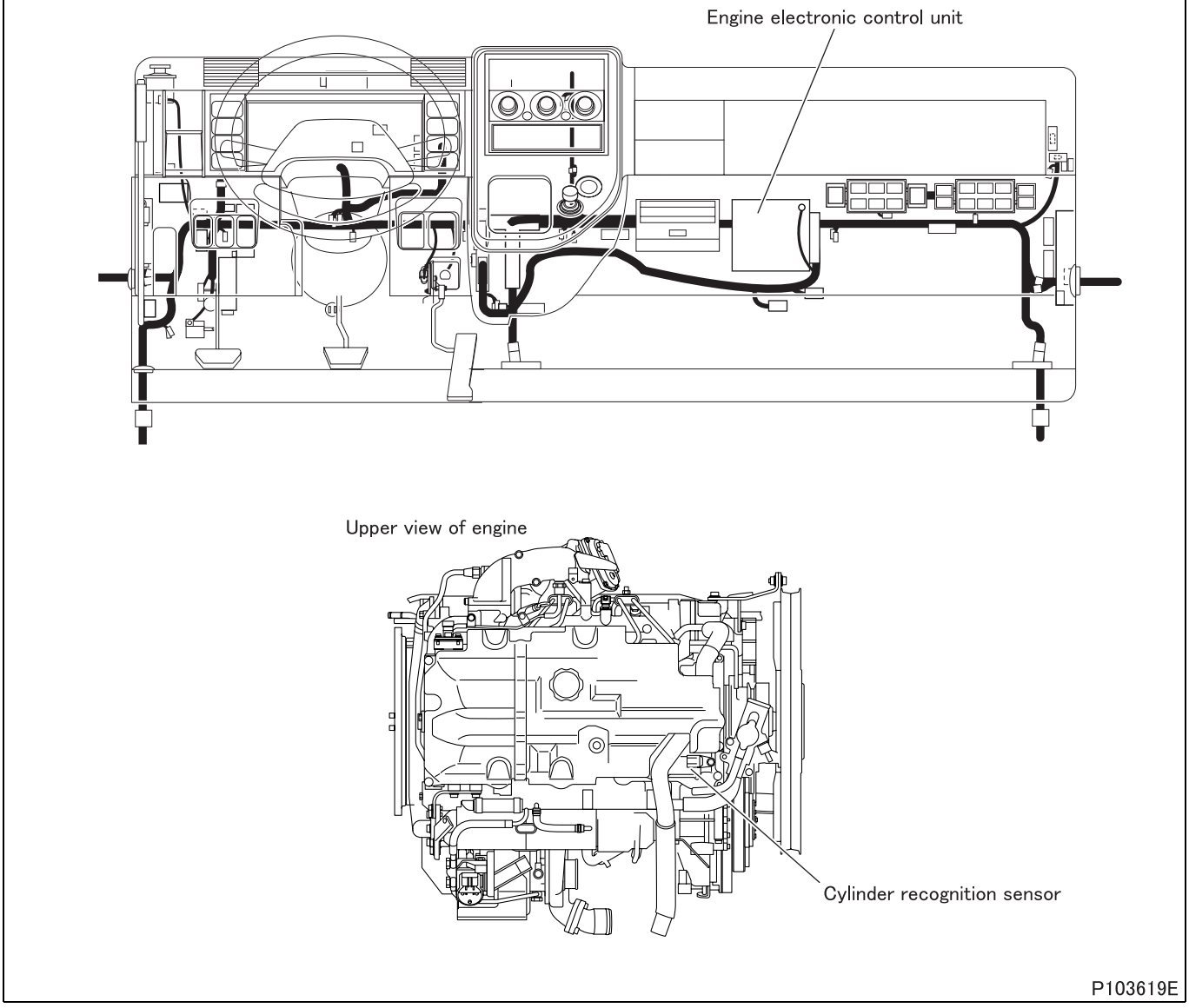

[Fault diagnosis]

- Perform checks in the sequence of the following steps.

Step 1	Inspection items		Inspection by control data
	Maintenance item		**<General Scanning Tool used>** • Measure item “Ne”. **<Multi-Use Tester used>** • Measure item No. 01 “Engine Revolution” of Service Data.
	Inspection condition		–
	Requirements		Same indication as tachometer is given.
	Inspection result (Is the judging standard satisfied?)	YES	Go to transient fault (See Gr00.).
		NO	Go to step 2.

Step 2	Inspection items		Inspection by electronic control unit connector (signal)
	Maintenance item		Measure value of voltage between connector (GE96A) terminal No. 59 (+) and 83 (–).
	Inspection condition		• Measure from back side of connector of harness with each device connected to harness. • Starter switch: ON
	Requirements		1 V or more
	Inspection result (Is the judging standard satisfied?)	YES	Go to step 5.
		NO	Go to step 3.

Step 3	Inspection items		Inspection by electronic control unit connector (power supply)
	Maintenance item		Measure value of voltage between connector (GE96A) terminal No. 78 (+) and 83 (–).
	Inspection condition		• Measure from back side of connector of harness with each device connected to harness. • Starter switch: ON
	Requirements		5 V
	Inspection result (Is the judging standard satisfied?)	YES	Go to step 4.
		NO	Go to step 5.

Step 4	Inspection items		Inspection by electronic control unit connector (ground)
	Maintenance item		Measure value of voltage between connector (GE96A) terminal No. 83 (+) and 53 (–).
	Inspection condition		• Measure from back side of connector of harness with each device connected to harness. • Starter switch: ON
	Requirements		0 V
	Inspection result (Is the judging standard satisfied?)	YES	Go to step 6.
		NO	Go to step 5.

Step 5	Inspection items		Inspection of electronic control unit connector
	Maintenance item		Inspection of connector
	Inspection condition		–
	Requirements		• Connector is properly connected. • No trace of water entry is found. • No corrosion is found in terminal. • Connection to terminal is appropriate.
	Inspection result (Is the judging standard satisfied?)	YES	Go to step 12.
		NO	Modify connector.

Step 6	Inspection items		Inspection of sensor connector
	Maintenance item		Inspection of connector
	Inspection condition		–
	Requirements		• Connector is properly connected. • No trace of water entry is found. • No corrosion is found in terminal. • Connection to terminal is appropriate.
	Inspection result (Is the judging standard satisfied?)	YES	Go to step 7.
		NO	Modify connector.

Step 7	Inspection items		Inspection of sensor unit
	Maintenance item		Measure value of resistance between connector terminal No. 2 and 3.
	Inspection condition		–
	Requirements		200 to 1800 Ω
	Inspection result (Is the judging standard satisfied?)	YES	Go to step 8.
		NO	Replacement of sensor

<Step 7 inspection diagram>

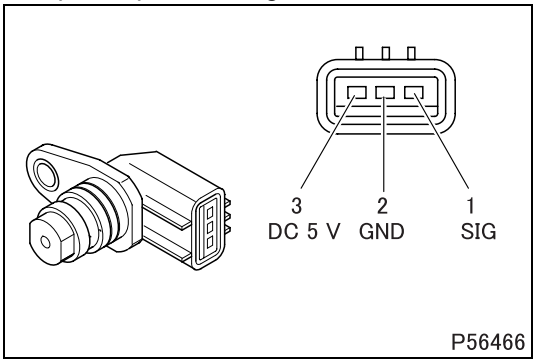

Step 8	Inspection items		Inspection of harness between electronic control unit and sensor (power supply)
	Maintenance item		Measure value of voltage between sensor connector terminal No. 3 (+) and 2 (–).
	Inspection condition		• Remove connector and measure from harness side. • Starter switch: ON
	Requirements		5 V
	Inspection result (Is the judging standard satisfied?)	YES	Go to step 10.
		NO	Go to step 9.

Step 9	Inspection items		Inspection of harness between electronic control unit and sensor (power supply)
	Maintenance item		Check circuit between sensor connector terminal No. 3 and electronic control unit connector (GE96A) terminal No. 78.
	Inspection condition		Disconnect each device from harness and measure from connection side of harness connector.
	Requirements		There is continuity.
	Inspection result (Is the judging standard satisfied?)	YES	Go to step 12.
		NO	Modify harness.

Step 10	Inspection items		Inspection of harness between electronic control unit and sensor (ground)
	Maintenance item		Check circuit between sensor connector terminal No. 2 and electronic control unit connector (GE96A) terminal No. 83.
	Inspection condition		Disconnect each device from harness and measure from connection side of harness connector.
	Requirements		There is continuity.
	Inspection result (Is the judging standard satisfied?)	YES	Go to step 11.
		NO	Modify harness.

Step 11	Inspection items		Inspection of harness between electronic control unit and sensor (signal)
	Maintenance item		Check circuit between sensor connector terminal No. 1 and electronic control unit connector (GE96A) terminal No. 59.
	Inspection condition		Disconnect each device from harness and measure from connection side of harness connector.
	Requirements		There is continuity.
	Inspection result (Is the judging standard satisfied?)	YES	Go to step 12.
		NO	Modify harness.

Step 12	Inspection items		Inspection by control data
	Maintenance item		**<General Scanning Tool used>** • Measure item “Ne”. **<Multi-Use Tester used>** • Measure item No. 01 “Engine Revolution” of Service Data.
	Inspection condition		–
	Requirements		Same indication as tachometer is given.
	Inspection result (Is the judging standard satisfied?)	YES	Go to transient fault (See Gr00.).
		NO	Replacement of electronic control unit

[Fault code]
Diagnosis code: P0381/Flash code: 26
[Monitor]
Failure of preheating indicator lamp
[Fault (outline)]
- Short circuit battery
- Short circuit ground
- Open circuit
- Overload

[Diagnosis check]
- Preheating indicator lamp circuit is monitored for fault.

[Code generation condition]
- Preheating indicator lamp circuit remains open, shorted or overcurrent as detected for 1 second.
  (Warning lamp is lit and diagnosis code is displayed on first establishment of code generation condition.)

[Diagnosis check timing]
- Fault diagnosis is performed each time when the control is initiated.
- Fault diagnosis is performed each time when the control is halted.

[Diagnostic requirement]
–

[Control effected by electronic control unit during fault]
- Effects no special control.

[Probable cause of trouble]
- Open-circuit or short-circuit of harness between electronic control unit and meter cluster (preheating indicator lamp)
- Malfunction of each connector
- Malfunction of meter cluster (preheating indicator lamp)
- Malfunction of electronic control unit

[Recoverability]
- Recovered if signal becomes normal with starter switch in ON position.
  (Warning lamp is extinguished and diagnosis code is cleared at fourth display of diagnosis code after recovery.)

[Electronic Control Unit Connection Diagram]

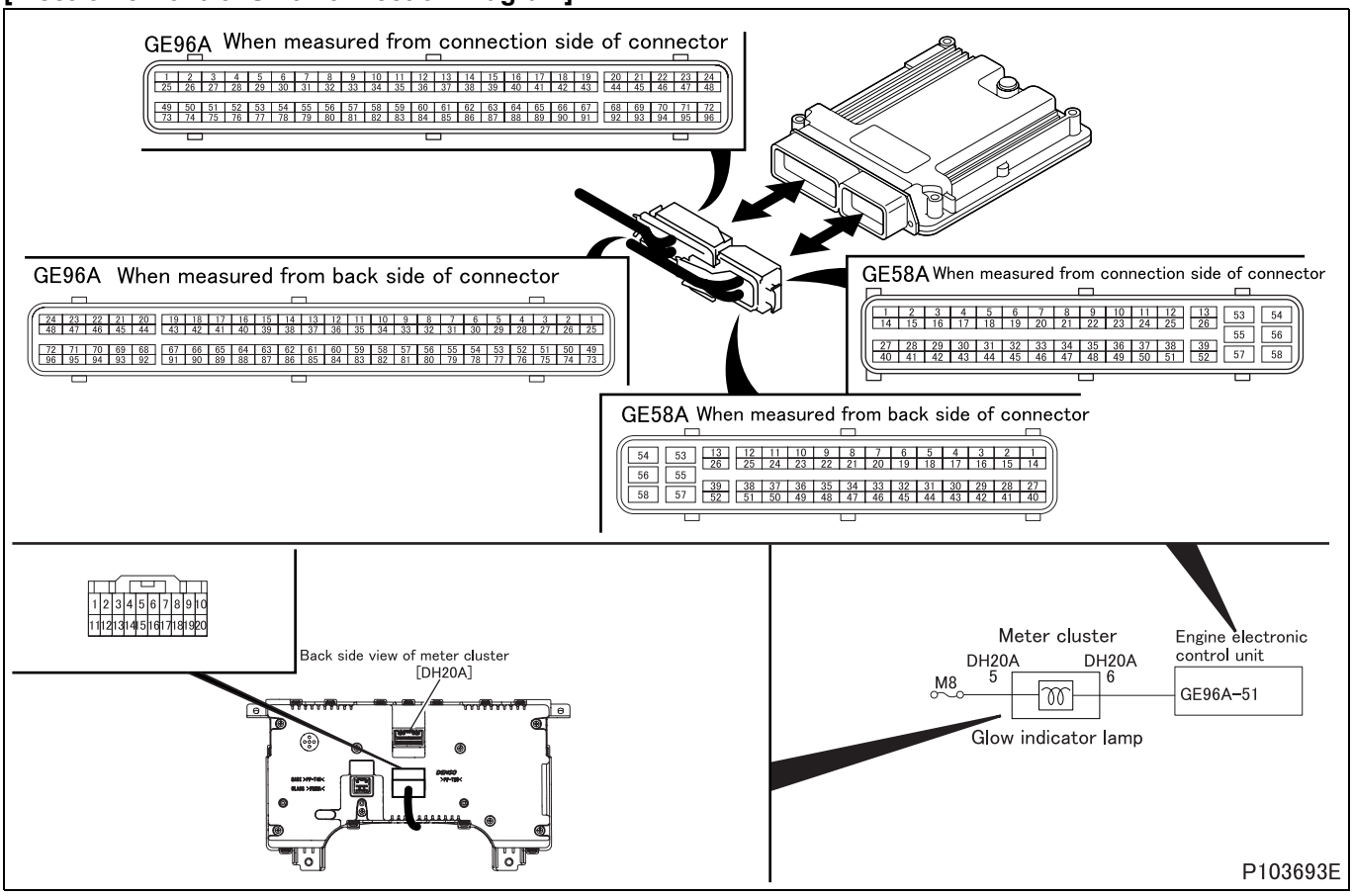

[Parts Identification and Location]

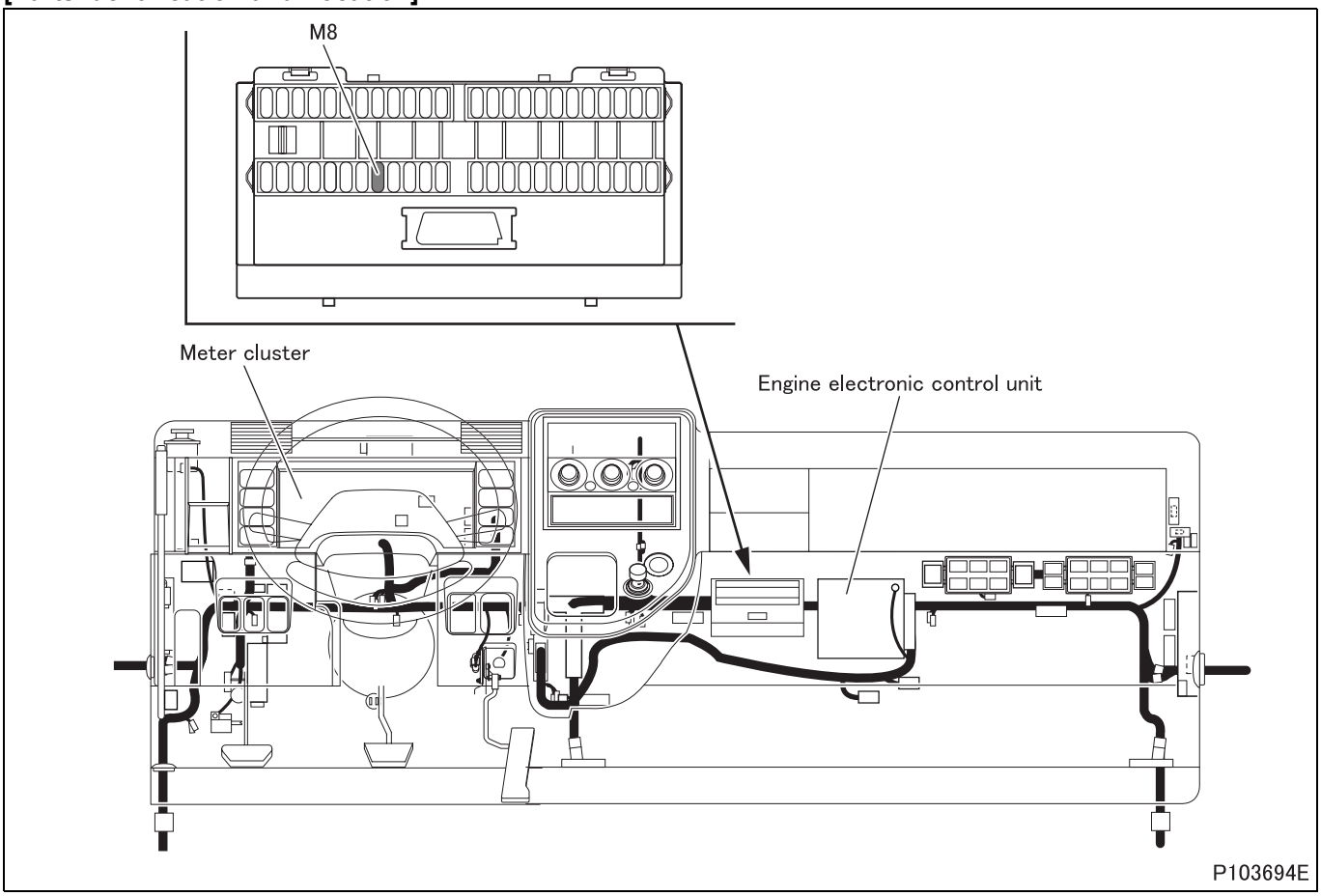

[Fault diagnosis]

- Perform checks in the sequence of the following steps.

Step 1	Inspection items		Inspection by control data
	Maintenance item		Perform item No. AD “Glow Indicator Lamp” of Service Data.
	Inspection condition		Starter switch: ON
	Requirements		Lamp illuminates for six seconds.
	Inspection result (Is the judging standard satisfied?)	YES	Go to transient fault (See Gr00.).
		NO	Go to step 2.

Step 2	Inspection items		Inspection of electronic control unit connector
	Maintenance item		Ground connector (GE96A) terminal No. 51.
	Inspection condition		Measure from back side of connector of harness with harness connected
	Requirements		Lamp illuminates.
	Inspection result (Is the judging standard satisfied?)	YES	Go to step 3.
		NO	Go to step 4.

Step 3	Inspection items		Inspection of electronic control unit connector
	Maintenance item		Inspection of connector
	Inspection condition		–
	Requirements		• Connector is properly connected. • No trace of water entry is found. • No corrosion is found in terminal. • Connection to terminal is appropriate.
	Inspection result (Is the judging standard satisfied?)	YES	Replacement of electronic control unit
		NO	Modify connector.

Step 4	Inspection items		Inspection of harness between fuse and meter cluster
	Maintenance item		Check circuit between fuse M8 and meter cluster connector (DH20A) terminal No. 5.
	Inspection condition		Disconnect each device from harness and measure from connection side of harness connector.
	Requirements		There is continuity.
	Inspection result (Is the judging standard satisfied?)	YES	Go to step 5.
		NO	Modify harness.

Step 5	Inspection items		Inspection of harness between meter cluster and electronic control unit
	Maintenance item		Check circuit between meter cluster connector (DH20A) terminal No. 6 and electronic control unit connector (GE96A) terminal No. 51
	Inspection condition		Disconnect each device from harness and measure from connection side of harness connector.
	Requirements		There is continuity.
	Inspection result (Is the judging standard satisfied?)	YES	Go to step 6.
		NO	Modify harness.

Step 6	Inspection items		Inspection of meter cluster
	Maintenance item		Inspection of connector
	Inspection condition		–
	Requirements		• Connector is properly connected. • No trace of water entry is found. • No corrosion is found in terminal. • Connection to terminal is appropriate.
	Inspection result (Is the judging standard satisfied?)	YES	Replacement of meter cluster or lamp
		NO	Modify connector.

[Fault code]
Diagnosis code: P0383/Flash code: 26
<FE83>
[Monitor]
Failure of preheating control
[Fault (outline)]
Short circuit ground
[Diagnosis check]
- Diesel particulate filter indicator lamp circuit is monitored for preheater in operation.

[Code generation condition]
- Preheating control circuit remains shorted to ground as detected for 0.2 second.
  (Warning lamp is lit and diagnosis code is displayed on third establishment of code generation conditions.)

[Diagnosis check timing]
- Fault diagnosis is performed each time when the control is halted.

[Diagnostic requirement]
–

[Control effected by electronic control unit during fault]
- Effects no special control.

[Probable cause of trouble]
- Open-circuit or short-circuit of harness between electronic control unit and glow electronic control unit
- Malfunction of each connector
- Malfunction of glow electronic control unit
- Malfunction of electronic control unit

[Recoverability]
- Recovered if signal becomes normal with starter switch in ON position.
  (Warning lamp is extinguished and diagnosis code is cleared at fourth display of diagnosis code after recovery.)

[Electronic Control Unit Connection Diagram]

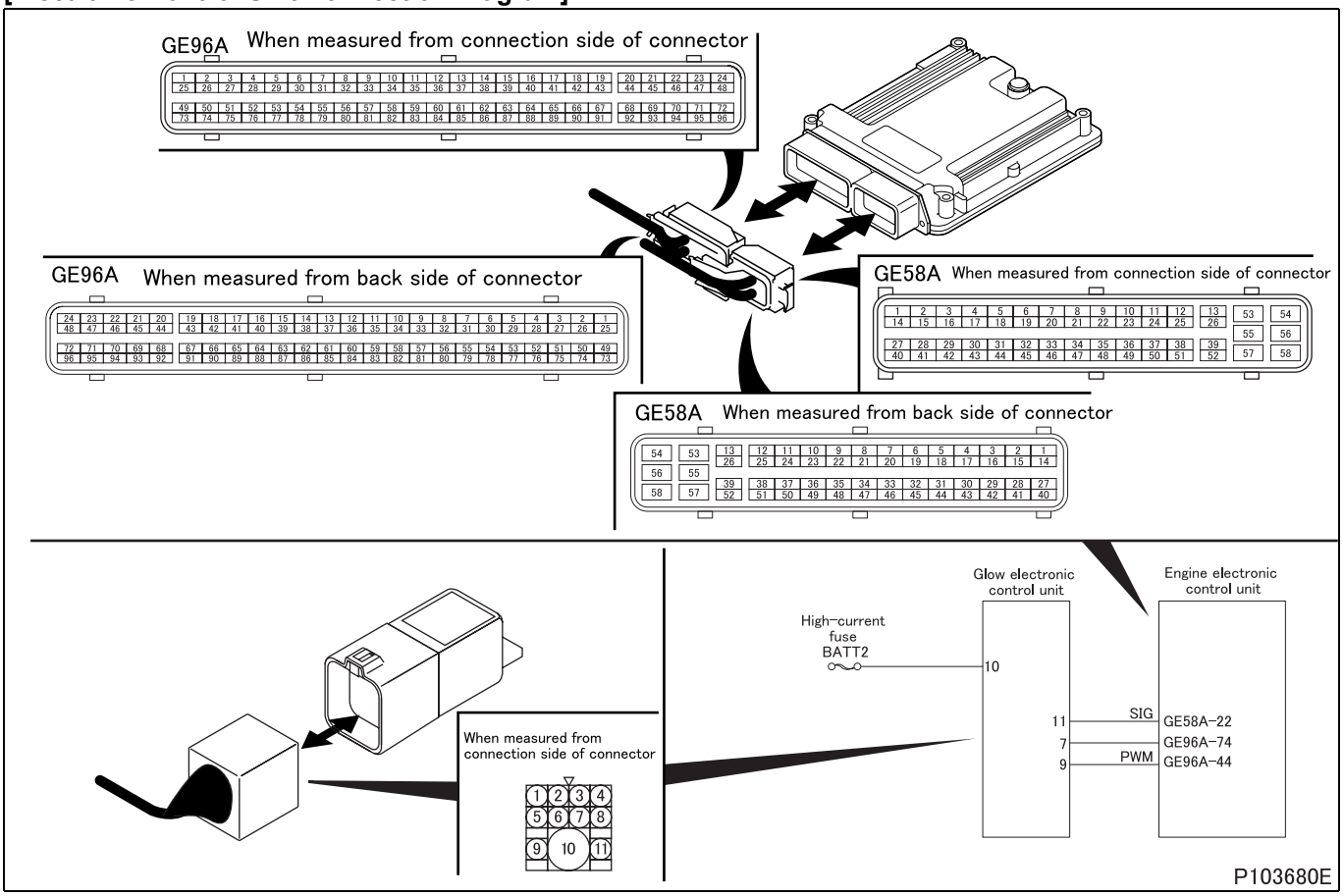

[Parts Identification and Location]

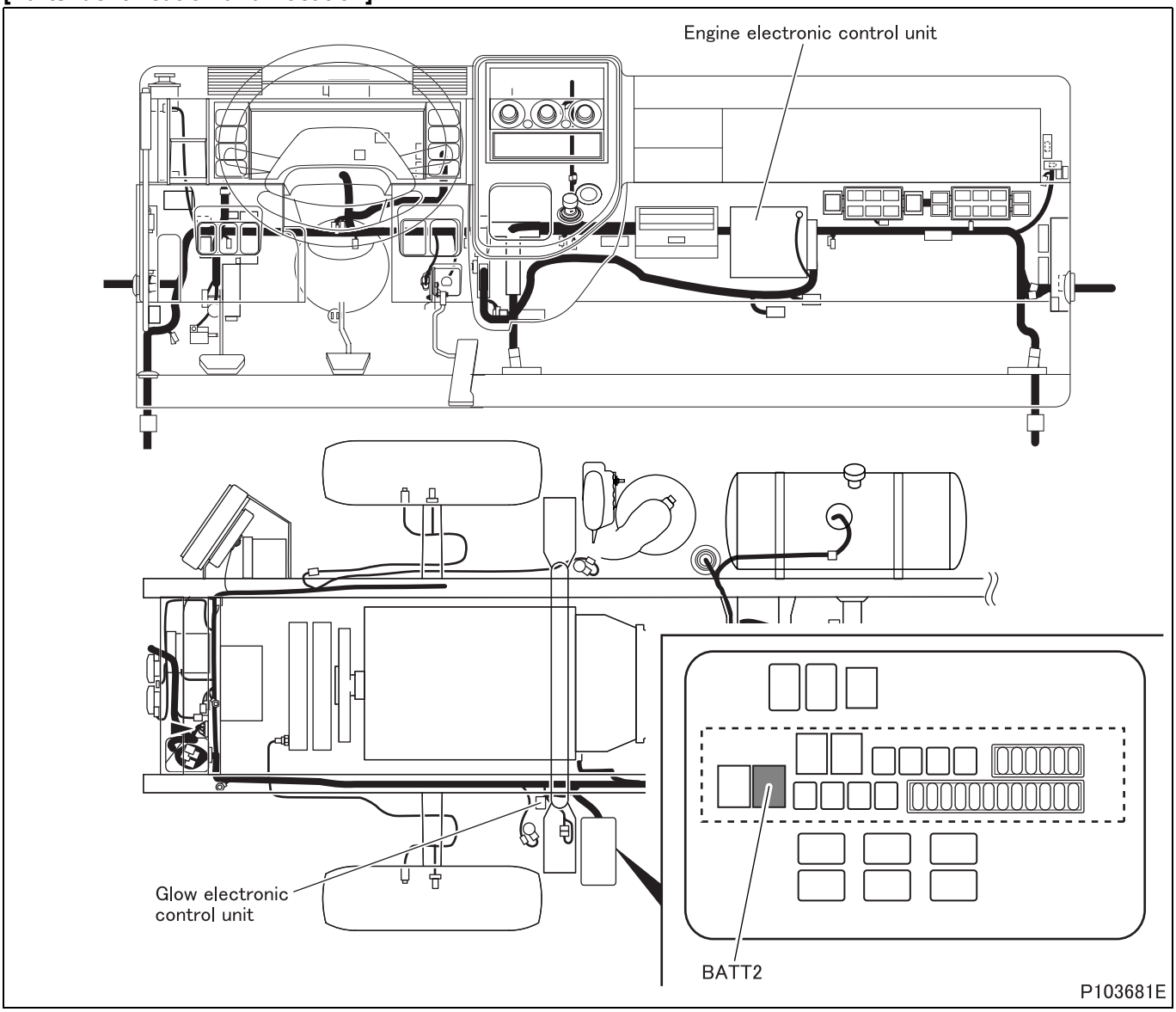

[Fault diagnosis]

- Perform checks in the sequence of the following steps.

Step 1	Inspection items		Inspection by control data
	Maintenance item		Perform actuator test item No. B5 “GCU (GLOW PLUG)”.
	Inspection condition		• Vehicle: stationary (vehicle speed 0 km/h {0MPH}) • Starter switch: ON • Engine: stopped
	Requirements		Power ON to glow plug
	Inspection result (Is the judging standard satisfied?)	YES	Go to transient fault (See Gr00.).
		NO	Go to step 2.

Step 2	Inspection items		Inspection of high-current fuse (BATT2)
	Maintenance item		Check open circuit of high-current fuse (BATT2)
	Inspection condition		–
	Requirements		There is continuity.
	Inspection result (Is the judging standard satisfied?)	YES	Go to step 3.
		NO	Replacement of fuse

Step 3	Inspection items		Inspection of harness between glow electronic control unit and high-current fuse (BATT2)
	Maintenance item		Check circuit between glow electronic control unit connector terminal No. 10 and high-current fuse (BATT2).
	Inspection condition		Disconnect each device from harness and measure from connection side of harness connector.
	Requirements		There is continuity.
	Inspection result (Is the judging standard satisfied?)	YES	Go to step 4.
		NO	Modify harness.

Step 4	Inspection items		Inspection of battery
	Maintenance item		Measure value of voltage between battery terminals (+) and (–).
	Inspection condition		–
	Requirements		8 to 16 V
	Inspection result (Is the judging standard satisfied?)	YES	Go to step 5.
		NO	Inspection of battery (See Gr54.)

<Step 4 inspection diagram>

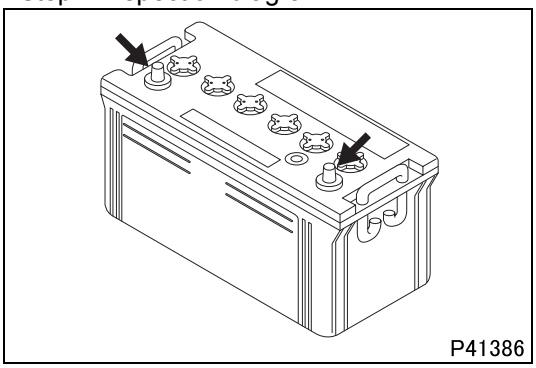

Step 5	Inspection items		Inspection of harness between glow electronic control unit and engine electronic control unit
	Maintenance item		Check circuit between following connector terminals. • Fault information circuit: glow electronic control unit terminal No. 11 - engine electronic control unit (GE58A) terminal No. 22 • Power supply circuit: glow electronic control unit terminal No. 7 - engine electronic control unit (GE96A) terminal No. 74 • Operating signal circuit: glow electronic control unit terminal No. 9 - engine electronic control unit (GE96A) terminal No. 44
	Inspection condition		Disconnect each device from harness and measure from connection side of harness connector.
	Requirements		There is continuity.
	Inspection result (Is the judging standard satisfied?)	YES	Go to step 6.
		NO	Modify harness.

Step 6	Inspection items		Inspection of glow electronic control unit connector
	Maintenance item		Inspection of connector
	Inspection condition		–
	Requirements		• Connector is properly connected. • No trace of water entry is found. • No corrosion is found in terminal. • Connection to terminal is appropriate.
	Inspection result (Is the judging standard satisfied?)	YES	After replacement of glow electronic control unit, go to step 7.
		NO	Modify connector.

Step 7	Inspection items		Inspection of engine electronic control unit connector
	Maintenance item		Inspection of connector
	Inspection condition		–
	Requirements		• Connector is properly connected. • No trace of water entry is found. • No corrosion is found in terminal. • Connection to terminal is appropriate.
	Inspection result (Is the judging standard satisfied?)	YES	Replacement of engine electronic control unit
		NO	Modify connector.

<Except FE83>
[Monitor]
Failure of preheating control
[Fault (outline)]
Short circuit ground
[Diagnosis check]
- Glow drive relay circuit is monitored for fault when glow drive relay is operated.

[Code generation condition]
- Glow drive relay circuit remains shorted to ground as detected for 1 second.
  (Warning lamp is lit and diagnosis code is displayed on third establishment of code generation conditions.)

[Diagnosis check timing]
- Fault diagnosis is performed each time when the control is halted.

[Diagnostic requirement]
–

[Control effected by electronic control unit during fault]
- Related fault check is stopped.

[Probable cause of trouble]
- Open-circuit or short-circuit of harness between electronic control unit and glow drive relay
- Malfunction of each connector
- Malfunction of glow drive relay
- Malfunction of electronic control unit

[Recoverability]
- Recovered if signal becomes normal with starter switch in ON position.
  (Warning lamp is extinguished and diagnosis code is cleared at fourth display of diagnosis code after recovery.)

[Electronic Control Unit Connection Diagram]

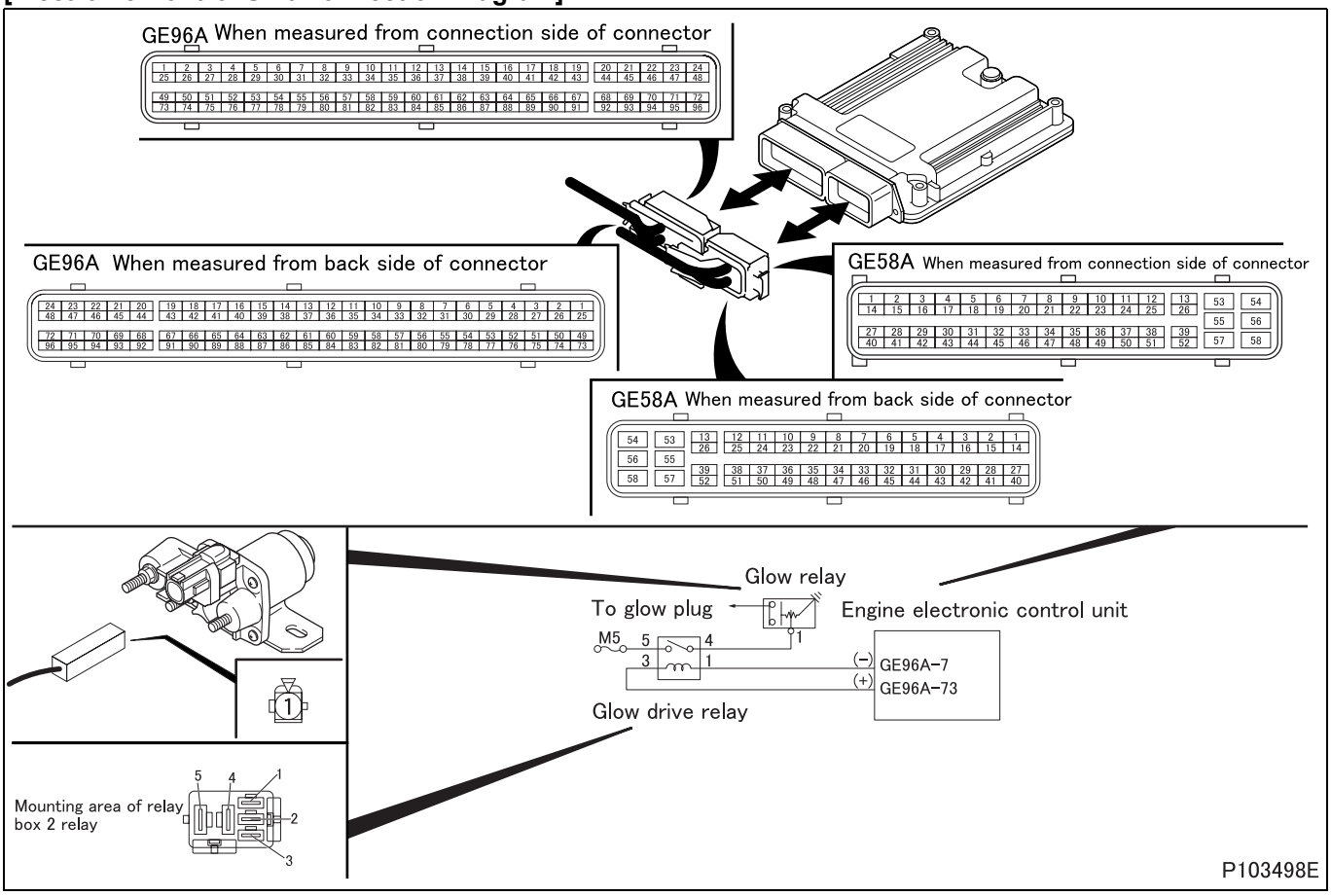

[Parts Identification and Location]

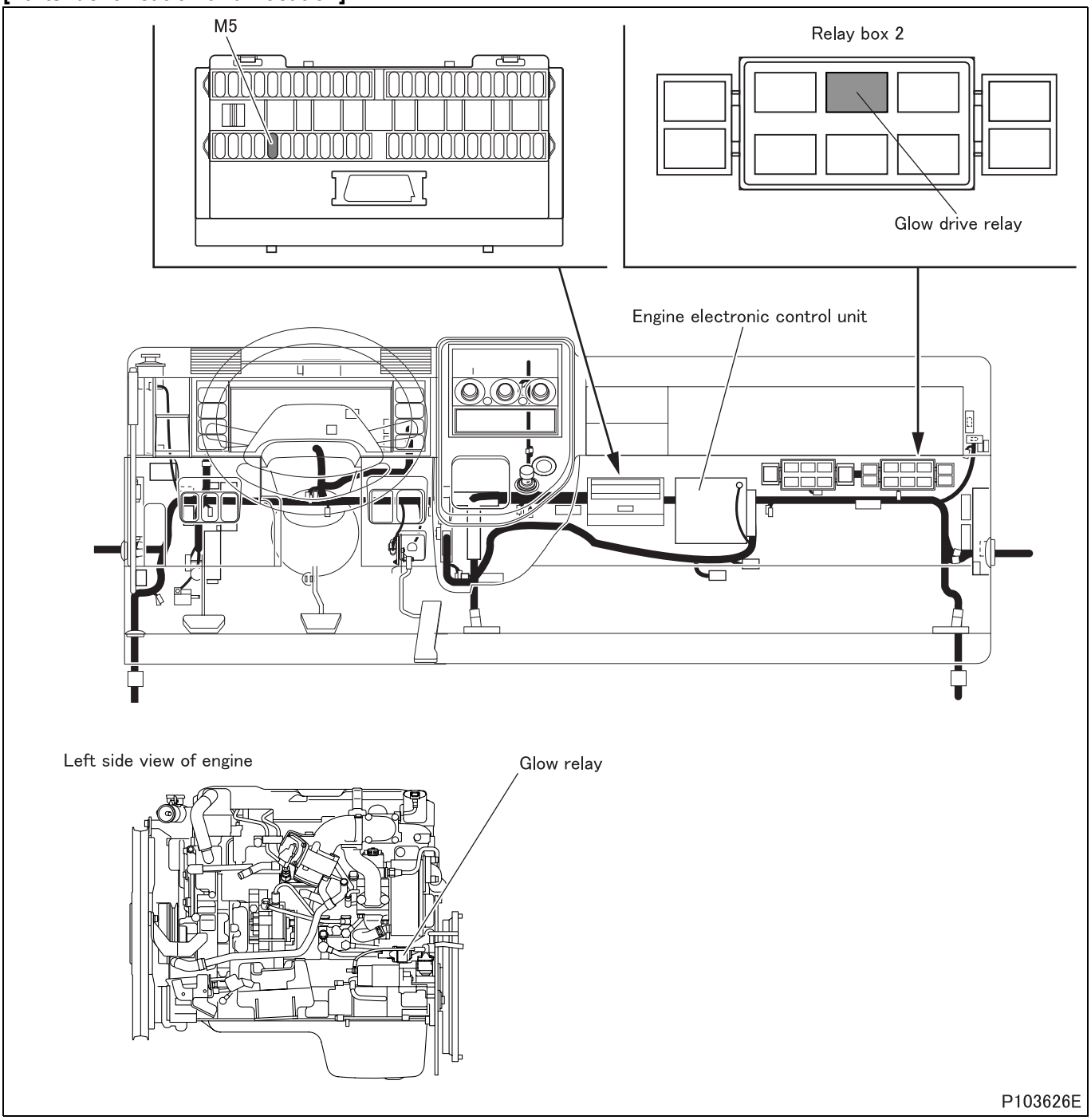

[Fault diagnosis]

- Perform checks in the sequence of the following steps.

Step 1	Inspection items		Inspection by control data
	Maintenance item		Perform actuator test item No. AC “Relay for Glow Relay”
	Inspection condition		–
	Requirements		Relay operation sound is noted.
	Inspection result (Is the judging standard satisfied?)	YES	Go to transient fault (See Gr00.).
		NO	Go to step 2.

Step 2	Inspection items		Inspection of electronic control unit connector (power supply)
	Maintenance item		Measure value of voltage between connector (GE96A) terminal No. 73 (+) and 7 (–).
	Inspection condition		• Measure from back side of connector of harness with each device connected to harness. • Perform actuator test item No. AC “Relay for Glow Relay”
	Requirements		Same as battery voltage.
	Inspection result (Is the judging standard satisfied?)	YES	Go to step 4.
		NO	Go to step 3.

Step 3	Inspection items		Inspection of electronic control unit connector
	Maintenance item		Inspection of connector
	Inspection condition		–
	Requirements		• Connector is properly connected. • No trace of water entry is found. • No corrosion is found in terminal. • Connection to terminal is appropriate.
	Inspection result (Is the judging standard satisfied?)	YES	Go to step 8.
		NO	Modify connector.

Step 4	Inspection items		Inspection of relay connector
	Maintenance item		Inspection of connector
	Inspection condition		–
	Requirements		• Connector is properly connected. • No trace of water entry is found. • No corrosion is found in terminal. • Connection to terminal is appropriate.
	Inspection result (Is the judging standard satisfied?)	YES	Go to step 5.
		NO	Modify connector.

Step 5	Inspection items		Inspection of relay unit
	Maintenance item		Measure continuity between terminals No. 4 and 5 when relay operates.
	Inspection condition		Apply battery voltage across terminals No. 3 (+) and 1 (–)
	Requirements		There is continuity.
	Inspection result (Is the judging standard satisfied?)	YES	Go to step 6.
		NO	Replacement of relay

<Step 5 inspection diagram>

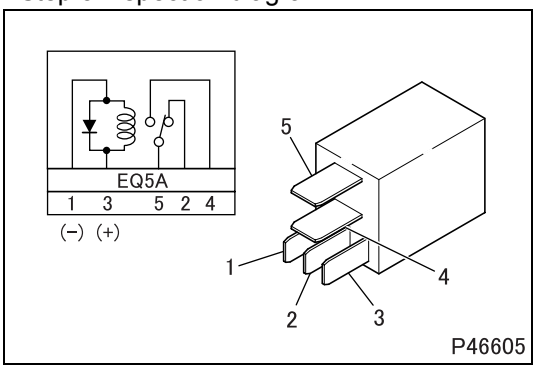

Step 6	Inspection items		Inspection of harness between relay and electronic control unit (power supply)
	Maintenance item		Check circuit between relay connector terminal No. 3 and electronic control unit connector (GE96A) terminal No. 73.
	Inspection condition		Disconnect electronic control unit from harness and measure from connection side of harness connector.
	Requirements		There is continuity.
	Inspection result (Is the judging standard satisfied?)	YES	Go to step 7.
		NO	Modify harness.

Step 7	Inspection items		Inspection of harness between relay and electronic control unit (ground)
	Maintenance item		Check circuit between relay connector terminal No. 1 and electronic control unit connector (GE96A) terminal No. 7.
	Inspection condition		Disconnect electronic control unit from harness and measure from connection side of harness connector.
	Requirements		There is continuity.
	Inspection result (Is the judging standard satisfied?)	YES	Go to step 8.
		NO	Modify harness.

Step 8	Inspection items		Inspection by control data
	Maintenance item		Perform actuator test item No. AC “Relay for Glow Relay”
	Inspection condition		–
	Requirements		Relay operation sound is noted.
	Inspection result (Is the judging standard satisfied?)	YES	Go to transient fault (See Gr00.).
		NO	Replacement of electronic control unit

[Fault code]
Diagnosis code: P0384/Flash code: 26
<FE83>
[Monitor]
Failure of preheating control
[Fault (outline)]
Short circuit battery
[Diagnosis check]
- Diesel particulate filter indicator lamp circuit is monitored for preheater in operation.

[Code generation condition]
- Preheating control circuit remains shorted to power supply as detected for 0.5 second.
  (Warning lamp is lit and diagnosis code is displayed on third establishment of code generation conditions.)

[Diagnosis check timing]
- Fault diagnosis is performed each time when the control is initiated.

[Diagnostic requirement]
–

[Control effected by electronic control unit during fault]
- Effects no special control.

[Probable cause of trouble]
- Open-circuit or short-circuit of harness between electronic control unit and glow electronic control unit
- Malfunction of each connector
- Malfunction of glow electronic control unit
- Malfunction of electronic control unit

[Recoverability]
- Recovered if signal becomes normal with starter switch in ON position.
  (Warning lamp is extinguished and diagnosis code is cleared at fourth display of diagnosis code after recovery.)

[Electronic Control Unit Connection Diagram]

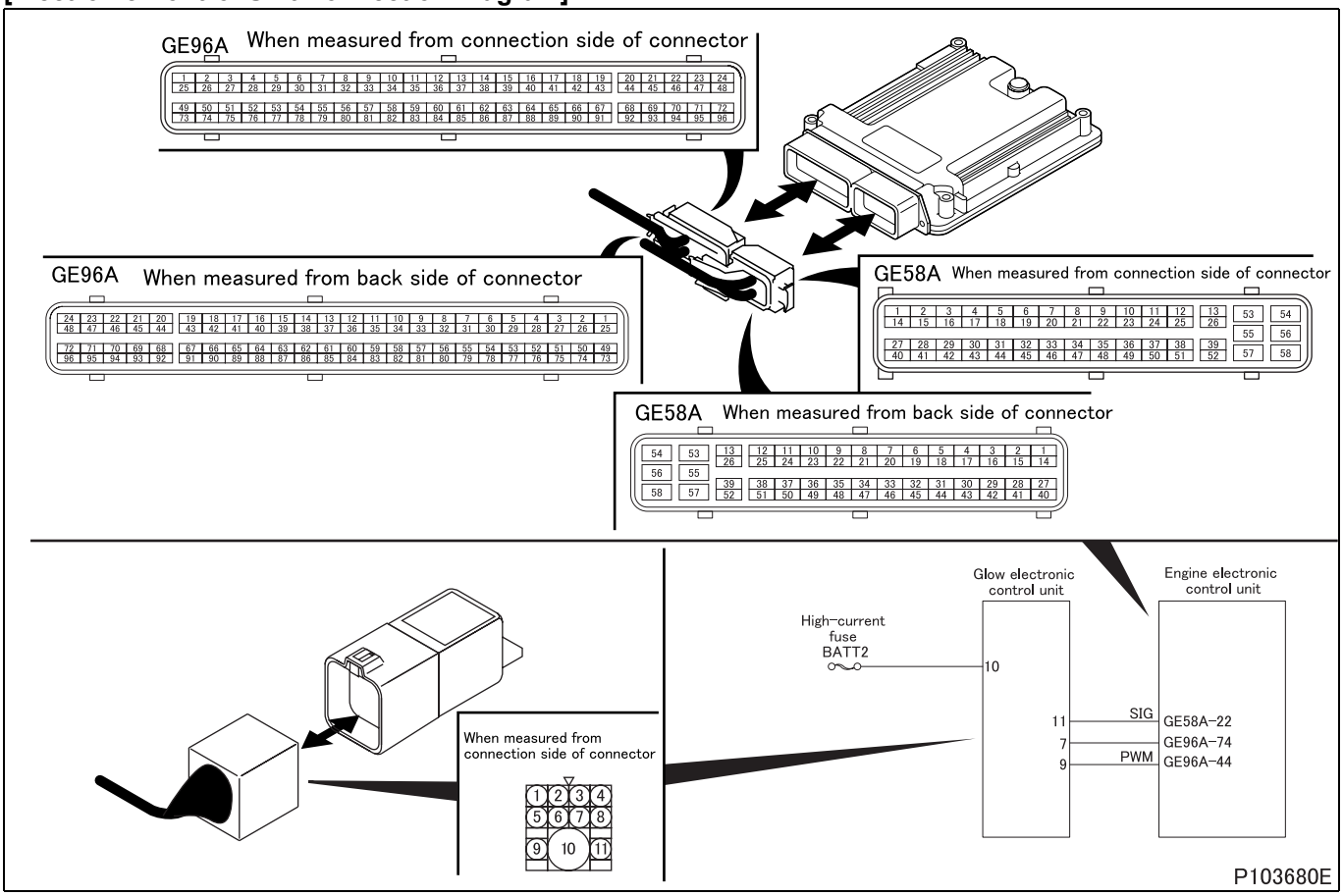

[Parts Identification and Location]

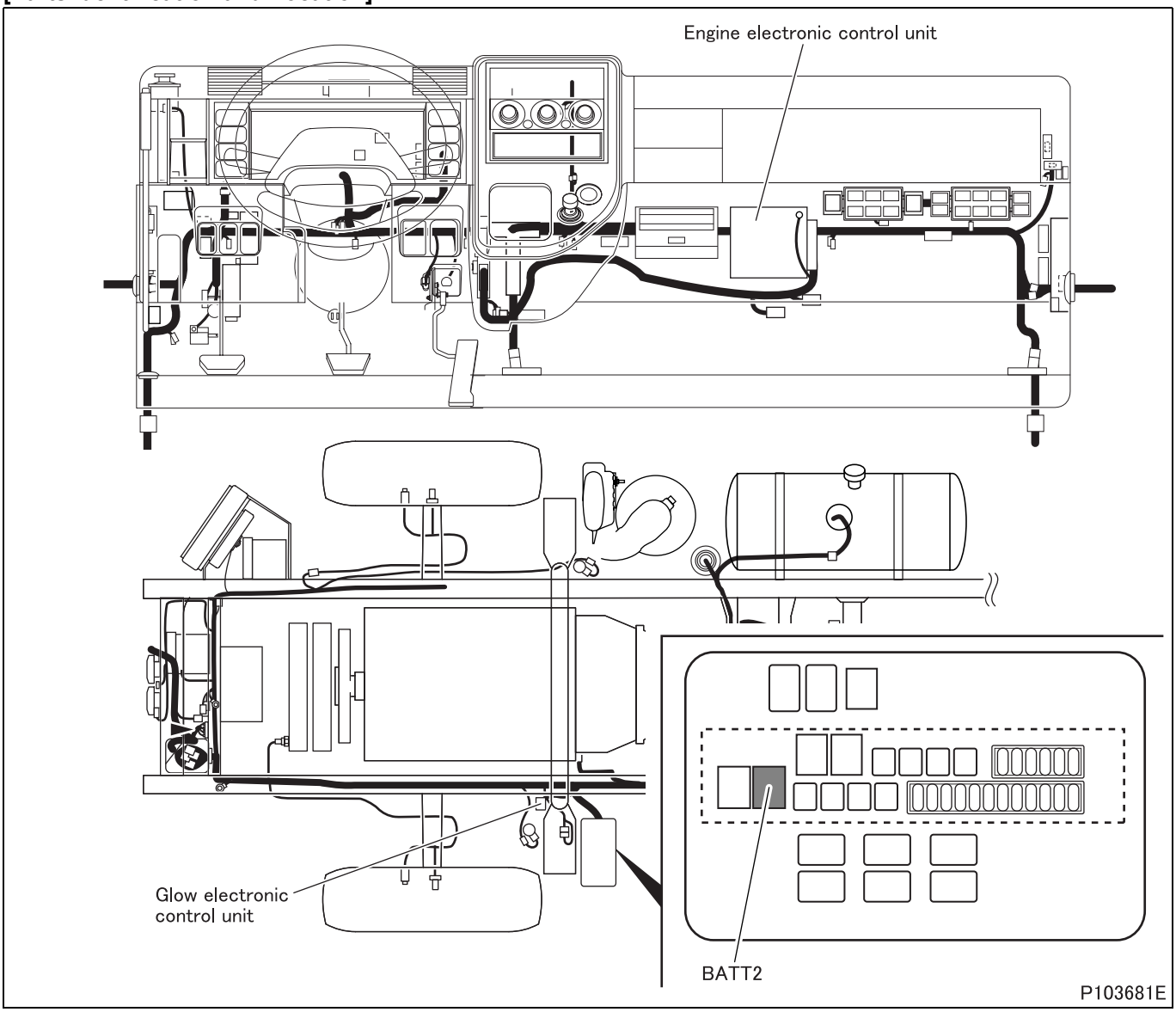

[Fault diagnosis]

- Perform checks in the sequence of the following steps.

Step 1	Inspection items		Inspection by control data
	Maintenance item		Perform actuator test item No. B5 “GCU (GLOW PLUG)”.
	Inspection condition		• Vehicle: stationary (vehicle speed 0 km/h {0MPH}) • Starter switch: ON • Engine: stopped
	Requirements		Power ON to glow plug
	Inspection result (Is the judging standard satisfied?)	YES	Go to transient fault (See Gr00.).
		NO	Go to step 2.

Step 2	Inspection items		Inspection of high-current fuse (BATT2)
	Maintenance item		Check open circuit of high-current fuse (BATT2)
	Inspection condition		–
	Requirements		There is continuity.
	Inspection result (Is the judging standard satisfied?)	YES	Go to step 3.
		NO	Replacement of fuse

Step 3	Inspection items		Inspection of harness between glow electronic control unit and high-current fuse (BATT2)
	Maintenance item		Check circuit between glow electronic control unit connector terminal No. 10 and high-current fuse (BATT2).
	Inspection condition		Disconnect each device from harness and measure from connection side of harness connector.
	Requirements		There is continuity.
	Inspection result (Is the judging standard satisfied?)	YES	Go to step 4.
		NO	Modify harness.

Step 4	Inspection items		Inspection of battery
	Maintenance item		Measure value of voltage between battery terminals (+) and (–).
	Inspection condition		–
	Requirements		8 to 16 V
	Inspection result (Is the judging standard satisfied?)	YES	Go to step 5.
		NO	Inspection of battery (See Gr54.).

<Step 4 inspection diagram>

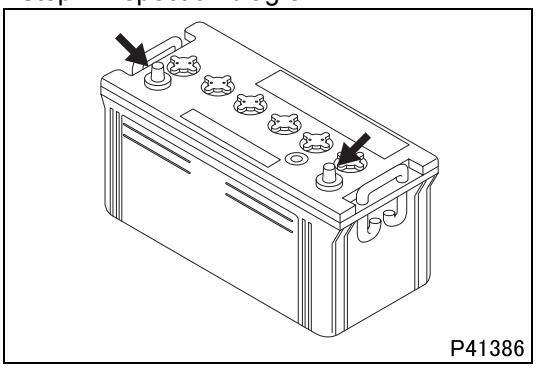

Step 5	Inspection items		Inspection of harness between glow electronic control unit and engine electronic control unit
	Maintenance item		Check circuit between following connector terminals. • Fault information circuit: glow electronic control unit terminal No. 11 - engine electronic control unit (GE58A) terminal No. 22 • Power supply circuit: glow electronic control unit terminal No. 7 - engine electronic control unit (GE96A) terminal No. 74 • Operating signal circuit: glow electronic control unit terminal No. 9 - engine electronic control unit (GE96A) terminal No. 44
	Inspection condition		Disconnect each device from harness and measure from connection side of harness connector.
	Requirements		There is continuity.
	Inspection result (Is the judging standard satisfied?)	YES	Go to step 6.
		NO	Modify harness.

Step 6	Inspection items		Inspection of glow electronic control unit connector
	Maintenance item		Inspection of connector
	Inspection condition		–
	Requirements		• Connector is properly connected. • No trace of water entry is found. • No corrosion is found in terminal. • Connection to terminal is appropriate.
	Inspection result (Is the judging standard satisfied?)	YES	After replacement of glow electronic control unit, go to step 7.
		NO	Modify connector.

Step 7	Inspection items		Inspection of engine electronic control unit connector
	Maintenance item		Inspection of connector
	Inspection condition		–
	Requirements		• Connector is properly connected. • No trace of water entry is found. • No corrosion is found in terminal. • Connection to terminal is appropriate.
	Inspection result (Is the judging standard satisfied?)	YES	Replacement of engine electronic control unit
		NO	Modify connector.

<Except FE83>
[Monitor]
Failure of preheating control
[Fault (outline)]
Short circuit battery
[Diagnosis check]
- Glow drive relay circuit is monitored for fault when glow drive relay is operated.

[Code generation condition]
- Glow drive relay circuit remains shorted to power supply as detected for 1 second.
  (Warning lamp is lit and diagnosis code is displayed on third establishment of code generation conditions.)

[Diagnosis check timing]
- Fault diagnosis is performed each time when the control is initiated.

[Diagnostic requirement]
–

[Control effected by electronic control unit during fault]
- Related fault check is stopped.

[Probable cause of trouble]
- Open-circuit or short-circuit of harness between electronic control unit and glow drive relay
- Malfunction of each connector
- Malfunction of glow drive relay
- Malfunction of electronic control unit

[Recoverability]
- Recovered if signal becomes normal with starter switch in ON position.
  (Warning lamp is extinguished and diagnosis code is cleared at fourth display of diagnosis code after recovery.)

[Electronic Control Unit Connection Diagram]

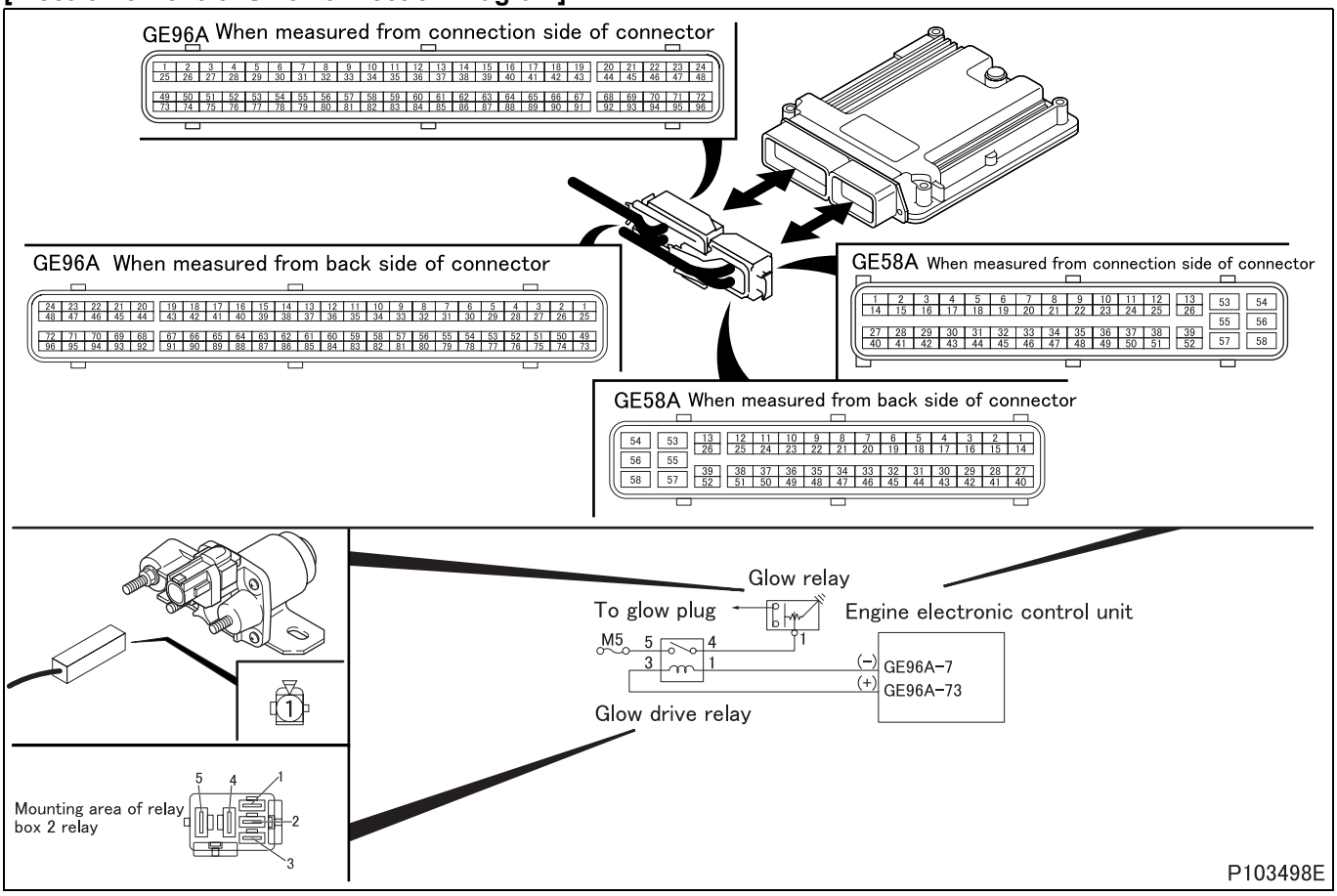

[Parts Identification and Location]

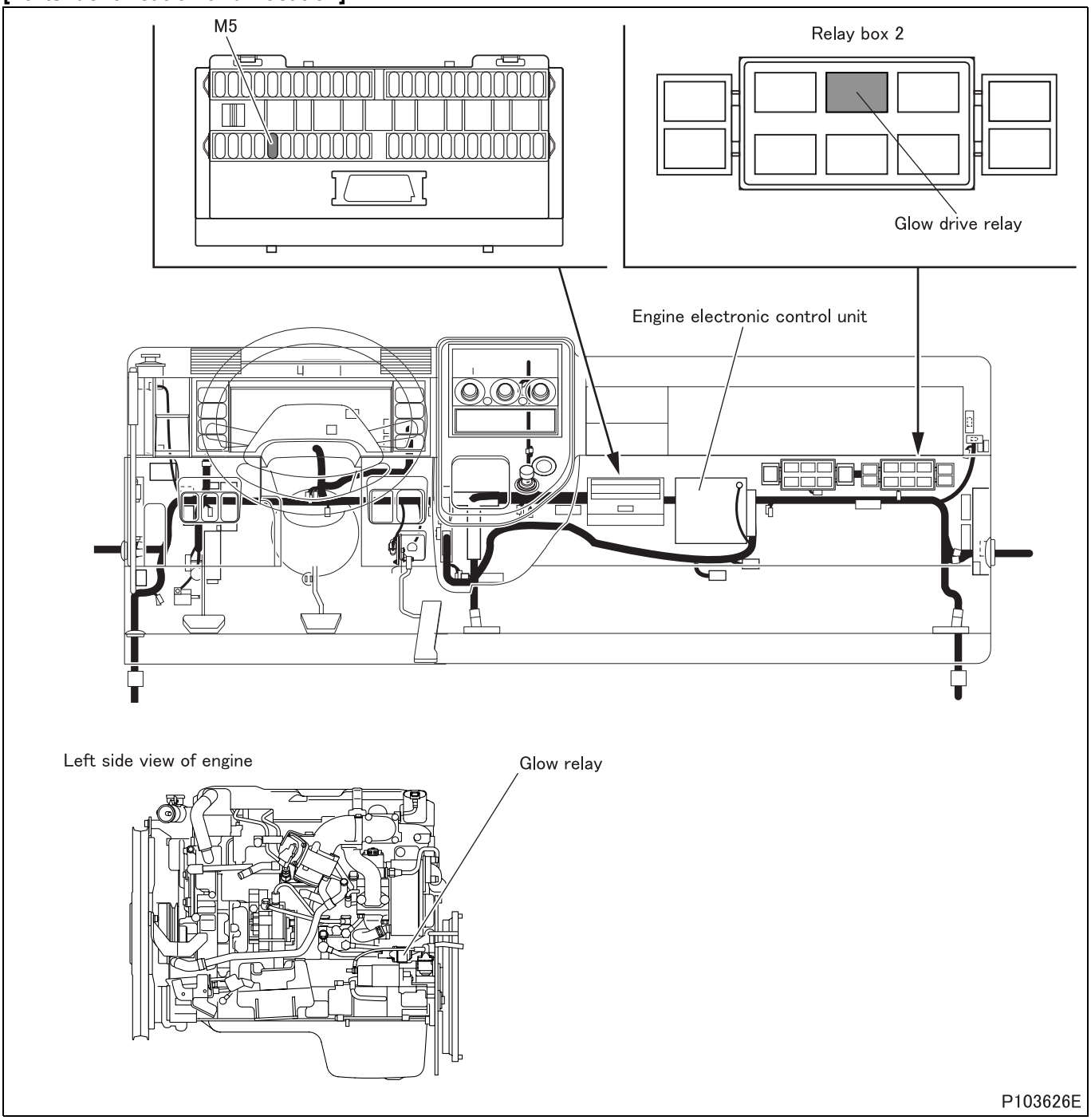

[Fault diagnosis]

- Perform checks in the sequence of the following steps.

Step 1	Inspection items		Inspection by control data
	Maintenance item		Perform actuator test item No. AC “Relay for Glow Relay”
	Inspection condition		–
	Requirements		Relay operation sound is noted.
	Inspection result (Is the judging standard satisfied?)	YES	Go to transient fault (See Gr00.).
		NO	Go to step 2.

Step 2	Inspection items		Inspection of electronic control unit connector (power supply)
	Maintenance item		Measure value of voltage between connector (GE96A) terminal No. 73 (+) and 7 (–).
	Inspection condition		• Measure from back side of connector of harness with each device connected to harness. • Perform actuator test item No. AC “Relay for Glow Relay “
	Requirements		Same as battery voltage.
	Inspection result (Is the judging standard satisfied?)	YES	Go to step 4.
		NO	Go to step 3.

Step 3	Inspection items		Inspection of electronic control unit connector
	Maintenance item		Inspection of connector
	Inspection condition		–
	Requirements		• Connector is properly connected. • No trace of water entry is found. • No corrosion is found in terminal. • Connection to terminal is appropriate.
	Inspection result (Is the judging standard satisfied?)	YES	Go to step 8.
		NO	Modify connector.

Step 4	Inspection items		Inspection of relay connector
	Maintenance item		Inspection of connector
	Inspection condition		–
	Requirements		• Connector is properly connected. • No trace of water entry is found. • No corrosion is found in terminal. • Connection to terminal is appropriate.
	Inspection result (Is the judging standard satisfied?)	YES	Go to step 5.
		NO	Modify connector.

Step 5	Inspection items		Inspection of relay unit
	Maintenance item		Measure continuity between terminals No. 4 and 5 when relay operates.
	Inspection condition		Apply battery voltage across terminals No. 3 (+) and 1 (–)
	Requirements		There is continuity.
	Inspection result (Is the judging standard satisfied?)	YES	Go to step 6.
		NO	Replacement of relay

<Step 5 inspection diagram>

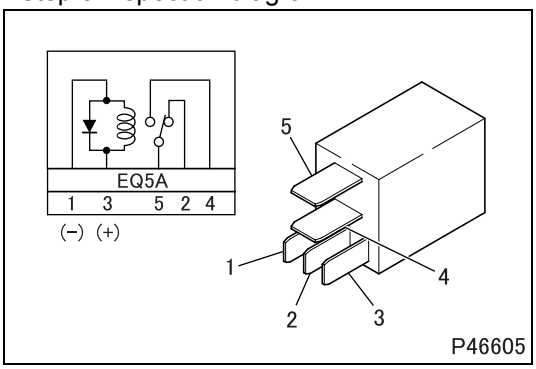

Step 6	Inspection items		Inspection of harness between relay and electronic control unit (power supply)
	Maintenance item		Check circuit between relay connector terminal No. 3 and electronic control unit connector (GE96A) terminal No. 73.
	Inspection condition		Disconnect electronic control unit from harness and measure from connection side of harness connector.
	Requirements		There is continuity.
	Inspection result (Is the judging standard satisfied?)	YES	Go to step 7.
		NO	Modify harness.

Step 7	Inspection items		Inspection of harness between relay and electronic control unit (ground)
	Maintenance item		Check circuit between relay connector terminal No. 1 and electronic control unit connector (GE96A) terminal No. 7.
	Inspection condition		Disconnect electronic control unit from harness and measure from connection side of harness connector.
	Requirements		There is continuity.
	Inspection result (Is the judging standard satisfied?)	YES	Go to step 8.
		NO	Modify harness.

Step 8	Inspection items		Inspection by control data
	Maintenance item		Perform actuator test item No. AC “Relay for Glow Relay”
	Inspection condition		–
	Requirements		Relay operation sound is noted.
	Inspection result (Is the judging standard satisfied?)	YES	Go to transient fault (See Gr00.).
		NO	Replacement of electronic control unit

[Fault code]
Diagnosis code: P0401/Flash code: 2
[Monitor]
Insufficient air flow rate in exhaust gas recirculation system
[Fault (outline)]
- Exhaust gas recirculation system insufficient flow
- Exhaust gas recirculation mass flow too low

[Diagnosis check]
Either of the following is monitored.
<Condition (1)>
- λ value computed by engine electronic control unit is compared with pre-mapped specified valve.

<Condition (2)>
- Exhaust gas recirculation flow rate (rate at which gas flows through exhaust gas recirculation valve) calculated by engine electronic control unit is compared with pre-mapped specified value.

[Code generation condition]
When either of the following is determined (Warning lamp is lit and diagnosis code is displayed on third establishment of code generation condition.).
<Condition (1)>
- Difference between target λ value and computed λ value remains less than specified for 4 seconds.

<Condition (2)>
- Computed exhaust gas recirculation flow rate remains below specified value for 10 seconds.

[Diagnosis check timing]
- Fault diagnosis is performed only once during the driving cycle.

[Diagnostic requirement]
<Condition (1)>
- Exhaust gas recirculation control: closed loop
- Water temperature: 65 to 120°C {149 to 248°F}
- Atmospheric pressure: 828 to 1100 mbar {12 to 15.95 psi}
- Intake air temperature: –7 to 65°C {19 to 149°F}
- Diesel particulate filter regeneration control: not effected
- Exhaust gas recirculation valve: in order
- Intake throttle: in order
- Turbocharger actuator: in order
- Controller area network communication of each electronic drive unit (exhaust gas recirculation, intake throttle and turbocharger): in order
- Air flow sensor: in order
- Atmospheric pressure sensor: in order
- Boost pressure sensor: in order
- Water temperature sensor: in order
- Intake air temperature sensor: in order
- Boost air temperature sensor: in order
- Sensor 5 V power supply: in order
- Battery voltage: in order
- MPROP (rail pressure control valve): in order
- Injector: in order
- Exhaust gas recirculation cooler: in order
- Starter switch circuit: in order
- Fuel feed when engine is idling: in order

<Condition (2)>
- Water temperature: 65 to 120°C {149 to 248°F}
- Atmospheric pressure: 828 to 1100 mbar {12 to 15.95 psi}
- Intake air temperature: –7 to 65°C {19 to 149°F}
- Exhaust gas recirculation valve: closed
- Diesel particulate filter regeneration control: not effected
- Exhaust gas recirculation valve: in order
- Intake throttle: in order
- Turbocharger actuator: in order
- Controller area network communication of each electronic drive unit (exhaust gas recirculation, intake throttle and turbocharger): in order
- Air flow sensor: in order
- Atmospheric pressure sensor: in order
- Boost pressure sensor: in order
- Water temperature sensor: in order
- Intake air temperature sensor: in order
- Boost air temperature sensor: in order
- Sensor 5 V power supply: in order
- Battery voltage: in order
- MPROP (rail pressure control valve): in order
- Injector: in order
- Exhaust gas recirculation cooler: in order
- Starter switch circuit: in order
- Fuel feed when engine is idling: in order

[Control effected by electronic control unit during fault]
- Exhaust gas recirculation control is stopped.
- Throttle controls disabled
- Diesel particulate filter regeneration is stopped (manual regeneration is feasible).
- Related fault check is stopped.

[Probable cause of trouble]
- Exhaust gas recirculation valve stuck (remains fully closed)
- Plugged exhaust gas recirculation pipe and hose
- Plugged exhaust gas recirculation cooler

[Recoverability]
- Recovered if signal becomes normal when starter switch is turned OFF to ON (power supply resumed to electronic control unit).
  (Warning lamp is extinguished and diagnosis code is cleared at fourth display of diagnosis code after recovery.)

[Fault diagnosis]

- Perform checks in the sequence of the following steps.

Step 1	Inspection items		Inspection by control data
	Maintenance item		Check if following diagnosis codes occur simultaneously. • P0403 “EGR1 (Actuator Circuit)” • P0409 “EGR1 (Position Sensor)” • P0562 “Power Supply Voltage (Low)” • P0563 “Power Supply Voltage (High)” • P0600 “CAN Communication” • P0607 “ECU System” • P060B “A/D Converter” • P061B “ECU Performance (Calc)” • P061C “ECU Performance (Ne)” • P0685 “EDU Relay (Open)” • P0686 “EDU Relay (Low)” • P0687 “EDU Relay (High)” • P2413 “EGR System”
	Inspection condition		• Starter switch: ON • Do not start engine
	Requirements		Codes occur.
	Inspection result (Is the judging standard satisfied?)	YES	Inspect diagnosis code that is occurring.
		NO	Inspection of exhaust gas recirculation system (exhaust gas recirculation pipe, exhaust gas recirculation cooler, exhaust gas recirculation valve)

[Fault code]
Diagnosis code: P0402/Flash code: 2
[Monitor]
Excessive air flow rate in exhaust gas recirculation system
[Fault (outline)]
- Exhaust gas recirculation system excessive flow
- Exhaust gas recirculation mass flow too high

[Diagnosis check]
Either of the following is monitored.
<Condition (1)>
- λ value computed by engine electronic control unit is compared with pre-mapped specified valve.

<Condition (2)>
- Exhaust gas recirculation flow rate (rate at which gas flows through exhaust gas recirculation valve) calculated by engine electronic control unit is compared with pre-mapped specified value.

[Code generation condition]
When either of the following is determined (Warning lamp is lit and diagnosis code is displayed on third establishment of code generation condition.).
<Condition (1)>
- Difference between target λ value and computed λ value remains more than specified for 4 seconds.

<Condition (2)>
- Computed exhaust gas recirculation flow rate remains more than specified value for 10 seconds.

[Diagnosis check timing]
- Fault diagnosis is performed only once during the driving cycle.

[Diagnostic requirement]
<Condition (1)>
- Exhaust gas recirculation control: closed loop
- Water temperature: 65 to 120°C {149 to 248°F}
- Atmospheric pressure: 828 to 1100 mbar {12 to 15.95 psi}
- Intake air temperature: –7 to 65°C {19 to 149°F}
- Diesel particulate filter regeneration control: not effected
- Exhaust gas recirculation valve: in order
- Intake throttle: in order
- Turbocharger actuator: in order
- Controller area network communication of each electronic drive unit (exhaust gas recirculation, intake throttle and turbocharger): in order
- Air flow sensor: in order
- Atmospheric pressure sensor: in order
- Boost pressure sensor: in order
- Water temperature sensor: in order
- Intake air temperature sensor: in order
- Boost air temperature sensor: in order
- Sensor 5 V power supply: in order
- Battery voltage: in order
- MPROP (rail pressure control valve): in order
- Injector: in order
- Exhaust gas recirculation cooler: in order
- Starter switch circuit: in order
- Fuel feed when engine is idling: in order

<Condition (2)>
- Water temperature: 65 to 120°C {149 to 248°F}
- Atmospheric pressure: 828 to 1100 mbar {12 to 15.95 psi}
- Intake air temperature: –7 to 65°C {19 to 149°F}
- Exhaust gas recirculation valve: closed
- Diesel particulate filter regeneration control: not effected
- Exhaust gas recirculation valve: in order
- Intake throttle: in order
- Turbocharger actuator: in order
- Controller area network communication of each electronic drive unit (exhaust gas recirculation, intake throttle and turbocharger): in order
- Air flow sensor: in order
- Atmospheric pressure sensor: in order
- Boost pressure sensor: in order
- Water temperature sensor: in order
- Intake air temperature sensor: in order
- Boost air temperature sensor: in order
- Sensor 5 V power supply: in order
- Battery voltage: in order
- MPROP (rail pressure control valve): in order
- Injector: in order
- Exhaust gas recirculation cooler: in order
- Starter switch circuit: in order
- Fuel feed when engine is idling: in order

[Control effected by electronic control unit during fault]
- Exhaust gas recirculation control is stopped.
- Throttle controls disabled
- Diesel particulate filter regeneration is stopped (manual regeneration is feasible).
- Related fault check is stopped.

[Probable cause of trouble]
- Exhaust gas recirculation valve stuck (remains fully open)
- Exhaust gas recirculation pipe and hose broken
- Exhaust gas recirculation cooler broken

[Recoverability]
- Recovered if signal becomes normal when starter switch is turned OFF to ON (power supply resumed to electronic control unit).
  (Warning lamp is extinguished and diagnosis code is cleared at fourth display of diagnosis code after recovery.)

[Fault diagnosis]

- Perform checks in the sequence of the following steps.

Step 1	Inspection items		Inspection by control data
	Maintenance item		Check if following diagnosis codes occur simultaneously. • P0403 “EGR1 (Actuator Circuit)” • P0409 “EGR1 (Position Sensor)” • P0562 “Power Supply Voltage (Low)” • P0563 “Power Supply Voltage (High)” • P0600 “CAN Communication” • P0607 “ECU System” • P060B “A/D Converter” • P061B “ECU Performance (Calc)” • P061C “ECU Performance (Ne)” • P0685 “EDU Relay (Open)” • P0686 “EDU Relay (Low)” • P0687 “EDU Relay (High)” • P2413 “EGR System”
	Inspection condition		• Starter switch: ON • Do not start engine
	Requirements		Codes occur.
	Inspection result (Is the judging standard satisfied?)	YES	Inspect diagnosis code that is occurring.
		NO	Inspection of exhaust gas recirculation system (exhaust gas recirculation pipe, exhaust gas recirculation cooler, exhaust gas recirculation valve)

[Fault code]
Diagnosis code: P0403/Flash code: 2, 67
[Monitor]
Failure of exhaust gas recirculation system
[Fault (outline)]
- Circuit
- Plausibility

[Diagnosis check]
- Exhaust gas recirculation electronic drive unit monitors built-in motor of exhaust gas recirculation valve for circuit fault and sends fault information to engine electronic control unit through controller area network communication.
- Monitoring by exhaust gas recirculation electronic drive unit is performed from initial operational status of motor at starter switch ON.

[Code generation condition]
When either of the following is determined (Warning lamp is lit and diagnosis code is displayed on third establishment of code generation conditions.)
- Motor circuit remains open or shorted as detected by electronic drive unit for 2 seconds.
- Exhaust gas recirculation valve keeps operating 95% or more for 3 seconds.

[Diagnosis check timing]
- Fault diagnosis is performed each time when the control is initiated.

[Diagnostic requirement]
- Controller area network communication in order

[Control effected by electronic control unit during fault]
Electronic control unit differs in the way of control by the diagnosis check item.
<Power supply circuit>
- Exhaust gas recirculation control is stopped.
- Throttle controls disabled
- Diesel particulate filter regeneration is stopped (manual regeneration is feasible).
- Related fault check is stopped.

<Motor circuit>
- Exhaust gas recirculation control is stopped.
- Throttle controls disabled
- Post injection is inhibited.
- Diesel particulate filter regeneration is stopped (manual regeneration is feasible).
- Related fault check is stopped.

[Probable cause of trouble]
- Open-circuit or short-circuit of harness between electronic drive unit and exhaust gas recirculation valve
- Malfunction of each connector
- Malfunction of exhaust gas recirculation motor (built in exhaust gas recirculation valve)
- Malfunction of exhaust gas recirculation position sensor (built in exhaust gas recirculation valve)
- Malfunction of electronic drive unit
- Malfunction of electronic drive unit relay

[Recoverability]
- Recovered if signal becomes normal with starter switch in ON position.
  (Warning lamp is extinguished and diagnosis code is cleared at fourth display of diagnosis code after recovery.)

[Electronic Control Unit Connection Diagram]

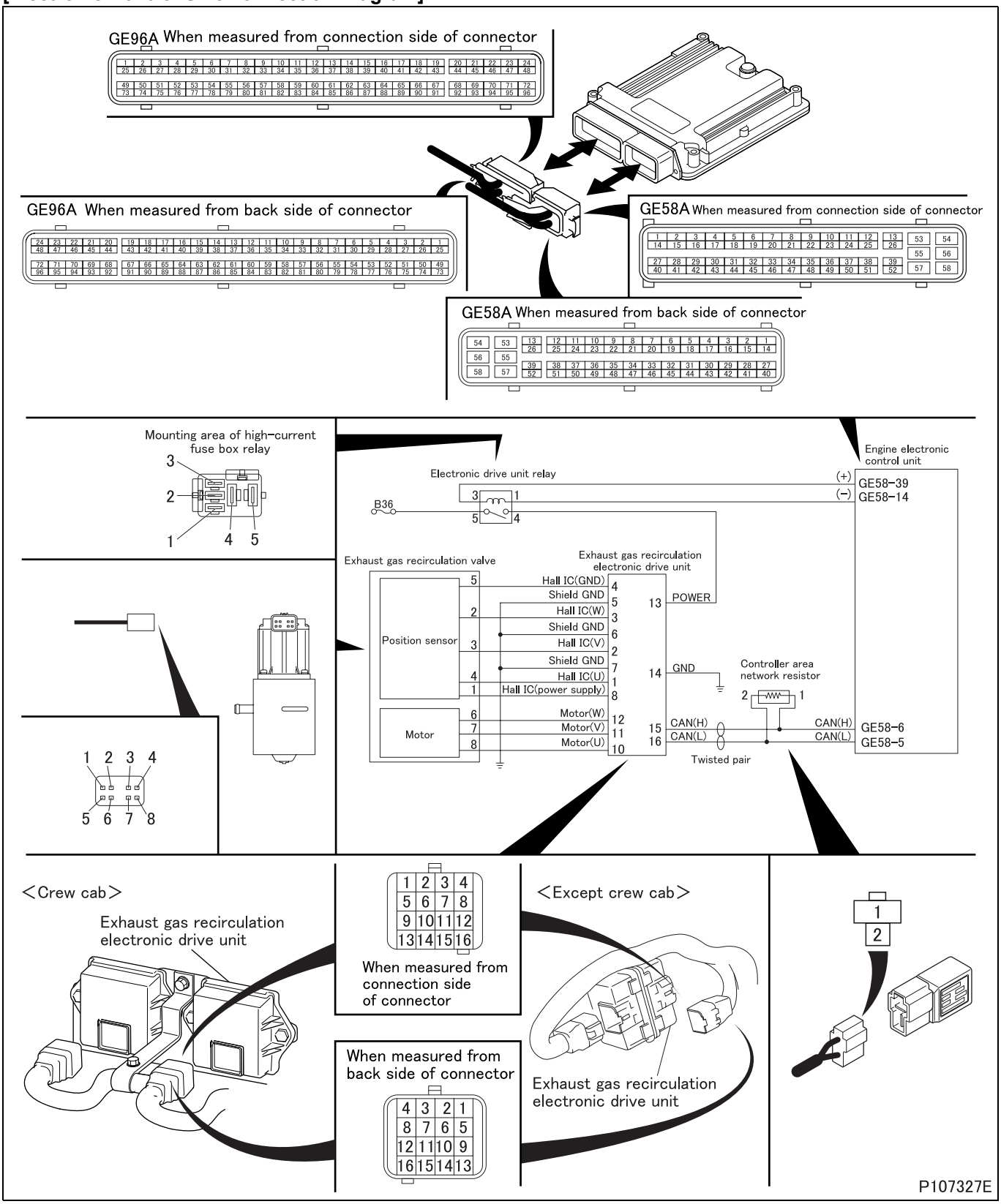

[Parts Identification and Location]

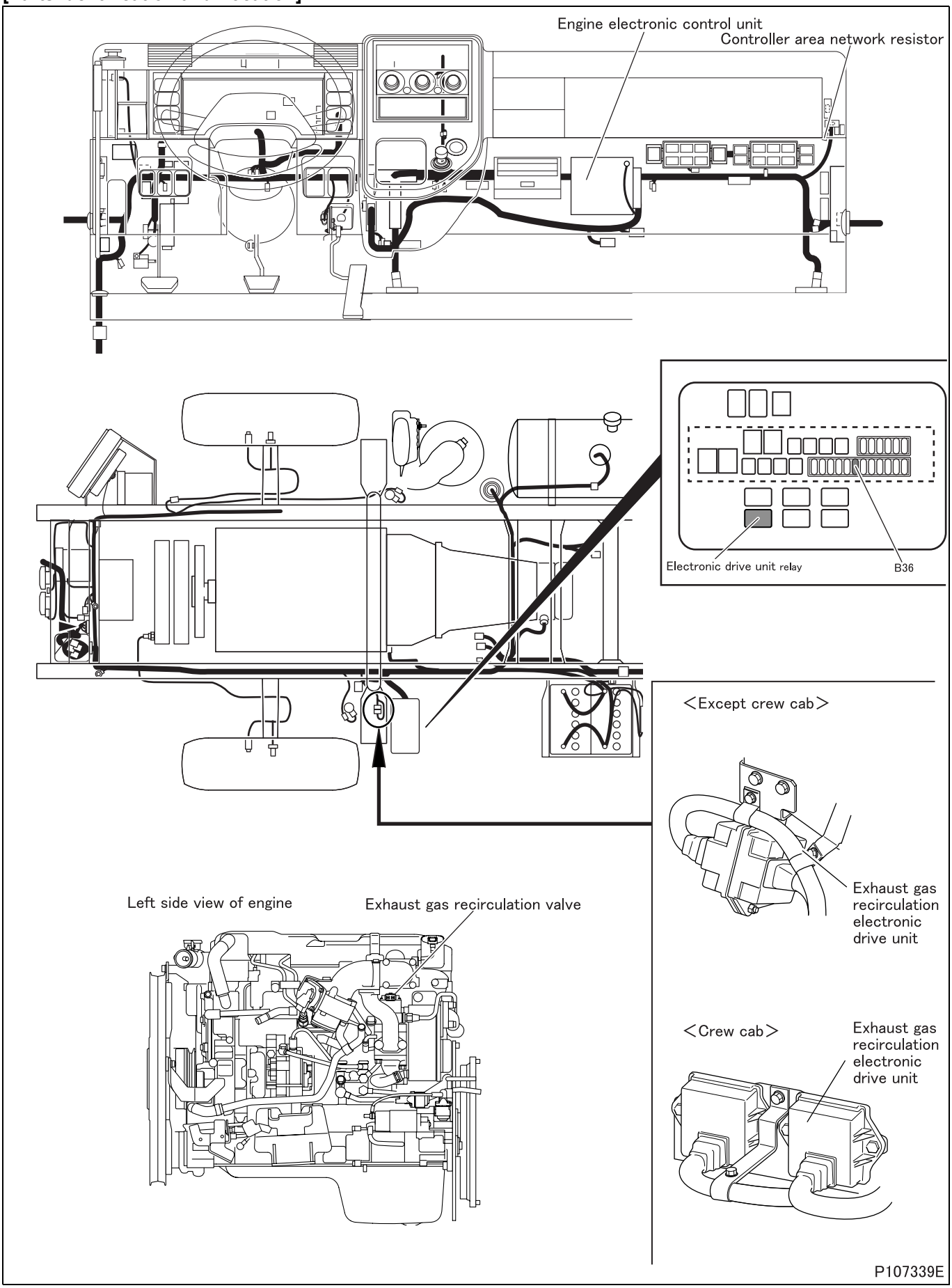

[Fault diagnosis]

- Perform checks in the sequence of the following steps.

Step 1	Inspection items		Inspection by control data
	Maintenance item		Perform actuator test item No. A0 “EGR 1”
	Inspection condition		• Vehicle: stationary (vehicle speed 0 km/h {0 MPH}) • Starter switch: ON (engine started) • Transmission: neutral (parking satisfactory for automatic transmission) • Diagnosis switch: OFF (fuse removed)
	Requirements		Actual position matches with target value set by Multi-Use Tester. (check with service data “51: Actual EGR Valve Position”) **NOTE** • **As initial operational check of exhaust gas recirculation valve is automatically effected immediately after starter switch is ON, perform actuator test by Multi-Use Tester after that check (approximately 5 seconds later).**
	Inspection result (Is the judging standard satisfied?)	YES	Go to transient fault (See Gr00.).
		NO	Go to step 2.

Step 2	Inspection items		Inspection of electronic drive unit connector
	Maintenance item		Inspection of connector
	Inspection condition		–
	Requirements		• Connector is properly connected. • No trace of water entry is found. • No corrosion is found in terminal. • Connection to terminal is appropriate.
	Inspection result (Is the judging standard satisfied?)	YES	Go to step 3.
		NO	Modify connector.

Step 3	Inspection items		Inspection of exhaust gas recirculation valve connector
	Maintenance item		Inspection of connector
	Inspection condition		–
	Requirements		• Connector is properly connected. • No trace of water entry is found. • No corrosion is found in terminal. • Connection to terminal is appropriate.
	Inspection result (Is the judging standard satisfied?)	YES	Go to step 4.
		NO	Modify connector.

Step 4	Inspection items		Inspection by control data
	Maintenance item		Check if following diagnosis codes occur simultaneously. • P0685 “EDU Relay (Open)” • P0686 “EDU Relay (Low)” • P0687 “EDU Relay (High)”
	Inspection condition		Starter switch: ON
	Requirements		No codes occur.
	Inspection result (Is the judging standard satisfied?)	YES	Go to step 5.
		NO	Inspect diagnosis code that is occurring.

Step 5	Inspection items		Inspection of electronic drive unit connector (power supply)
	Maintenance item		Measure value of voltage between connector terminal No. 13 (+) and 14 (–).
	Inspection condition		• Remove connector and measure from harness side. • Starter switch: ON • Perform actuator test item No. AF “EDU Relay”
	Requirements		Same as battery voltage.
	Inspection result (Is the judging standard satisfied?)	YES	Go to step 10.
		NO	Go to step 6.

Step 6	Inspection items		Inspection of relay connector
	Maintenance item		Inspection of connector
	Inspection condition		–
	Requirements		• Connector is properly connected. • No trace of water entry is found. • No corrosion is found in terminal. • Connection to terminal is appropriate.
	Inspection result (Is the judging standard satisfied?)	YES	Go to step 7.
		NO	Modify connector.

Step 7	Inspection items		Inspection of harness between fuse and relay
	Maintenance item		Check circuit between fuse No. B35 and relay connector terminal No. 5
	Inspection condition		Disconnect each device from harness and measure from connection side of harness connector.
	Requirements		There is continuity.
	Inspection result (Is the judging standard satisfied?)	YES	Go to step 8.
		NO	Modify harness.

Step 8	Inspection items		Inspection of harness between relay and electronic drive unit
	Maintenance item		Check circuit between relay connector terminal No. 4 and electronic drive unit connector terminal No. 13
	Inspection condition		Disconnect each device from harness and measure from connection side of harness connector.
	Requirements		There is continuity.
	Inspection result (Is the judging standard satisfied?)	YES	After replacement of electronic drive unit relay, go to step 9
		NO	Modify harness.

Step 9	Inspection items		Inspection of harness between electronic drive unit and ground
	Maintenance item		Check circuit between following electronic drive unit connector • Electronic drive unit ground: terminal No. 14 - chassis ground • Sensor shield ground (U): terminal No. 5 - 14 • Sensor shield ground (V): terminal No. 6 - 14 • Sensor shield ground (W): terminal No. 7 - 14 • Sensor ground: terminal No. 4 - 14
	Inspection condition		Disconnect each device from harness and measure from connection side of harness connector.
	Requirements		There is continuity.
	Inspection result (Is the judging standard satisfied?)	YES	Go to step 10.
		NO	Modify harness.

Step 10	Inspection items		Inspection of electronic drive unit connector (motor)
	Maintenance item		Measure value of resistance between following connector terminals. • Between U - V: 10 - 11 • Between U - W: 10 - 12 • Between V - W: 11 - 12
	Inspection condition		–
	Requirements		2.1 ± 0.3 Ω
	Inspection result (Is the judging standard satisfied?)	YES	Go to step 13.
		NO	Go to step 11.

Step 11	Inspection items		Inspection of harness between electronic drive unit and exhaust gas recirculation valve (motor)
	Maintenance item		Check circuit between following connector terminals. • Motor (U): electronic drive unit connector terminal No. 10 - exhaust gas recirculation valve connector terminal No. 8 • Motor (V): electronic drive unit connector terminal No. 11 - exhaust gas recirculation valve connector terminal No. 7 • Motor (W): electronic drive unit connector terminal No. 12 - exhaust gas recirculation valve connector terminal No. 6
	Inspection condition		Disconnect each device from harness and measure from connection side of harness connector.
	Requirements		There is continuity.
	Inspection result (Is the judging standard satisfied?)	YES	Go to step 12.
		NO	Modify harness.

Step 12	Inspection items		Inspection of exhaust gas recirculation valve unit (motor)
	Maintenance item		Measure value of resistance between following exhaust gas recirculation valve connector terminals • Between U - V: 8 - 7 • Between U - W: 8 - 6 • Between V - W: 7 - 6
	Inspection condition		• Keep exhaust gas recirculation valve installed on vehicle. • Remove harness connector, and measure exhaust gas recirculation valve side.
	Requirements		2.1 ± 0.3 Ω
	Inspection result (Is the judging standard satisfied?)	YES	Go to step 13.
		NO	Replacement of exhaust gas recirculation valve

<Step 12 inspection diagram>

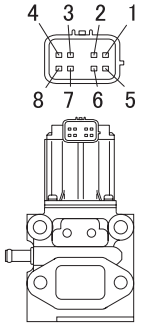

P68994

Step 13	Inspection items		Inspection of exhaust gas recirculation valve connector (position sensor: power supply)
	Maintenance item		Measure value of voltage between connector terminal No. 1 (+) and 5 (–).
	Inspection condition		• Measure from back side of connector of harness with each device connected to harness. • Starter switch: ON
	Requirements		10 V
	Inspection result (Is the judging standard satisfied?)	YES	Go to step 14.
		NO	Go to step 15.

Step 14	Inspection items		Inspection of electronic drive unit connector (position sensor: signal)
	Maintenance item		Measure value of voltage between following electronic drive unit connector terminals • U signal output: terminal 1 (+) - 4 (–) • V signal output: terminal 2 (+) - 4 (–) • W signal output: terminal 3 (+) - 4 (–)
	Inspection condition		• Measure from back side of connector of harness with each device connected to harness. • Starter switch: ON • Perform actuator test item No. A0 “EGR 1”
	Requirements		8 to 11 V
	Inspection result (Is the judging standard satisfied?)	YES	Go to step 16.
		NO	Go to step 15.

Step 15	Inspection items		Inspection of harness between electronic drive unit and exhaust gas recirculation valve (position sensor)
	Maintenance item		Check circuit between following connector terminals. • Sensor (power supply): electronic drive unit connector terminal No. 8 - exhaust gas recirculation valve connector terminal No. 1 • Sensor (U): electronic drive unit connector terminal No. 1 - exhaust gas recirculation valve connector terminal No. 4 • Sensor (V): electronic drive unit connector terminal No. 2 - exhaust gas recirculation valve connector terminal No. 3 • Sensor (W): electronic drive unit connector terminal No. 3 - exhaust gas recirculation valve connector terminal No. 2 • Sensor (ground): electronic drive unit connector terminal No. 4 - exhaust gas recirculation valve connector terminal No. 5
	Inspection condition		Disconnect each device from harness and measure from connection side of harness connector.
	Requirements		There is continuity.
	Inspection result (Is the judging standard satisfied?)	YES	After replacement of exhaust gas recirculation valve, go to step 16
		NO	Modify harness.

Step 16	Inspection items		Inspection by control data
	Maintenance item		Perform actuator test item No. A0 “EGR 1” **NOTE** • **As initial operational check of exhaust gas recirculation valve is automatically effected immediately after starter switch is ON, perform actuator test by Multi-Use Tester after that check (approximately 5 seconds later).**
	Inspection condition		• Vehicle: stationary (vehicle speed 0 km/h {0 MPH}) • Starter switch: ON (engine started) • Transmission: neutral • Diagnosis switch: OFF (fuse removed)
	Requirements		Actual position matches with target value set by Multi-Use Tester. (check with service data “51: Actual EGR Valve Position”)
	Inspection result (Is the judging standard satisfied?)	YES	Go to transient fault (See Gr00.).
		NO	Replacement of electronic drive unit

[Fault code]
Diagnosis code: P0404/Flash code: 67
[Monitor]
Failure of exhaust gas recirculation valve
[Fault (outline)]
- Circuit
- Open valve

[Diagnosis check]
- Exhaust gas recirculation electronic drive unit monitors for sticking of built-in motor and opening status by exhaust gas recirculation valve for circuit fault and sends fault information to engine electronic control unit through controller area network communication.
- Exhaust gas recirculation electronic drive unit determines valve condition according to valve position detected through position sensor.

[Code generation condition]
Diagnosis code is generated under either of the following conditions. (Warning lamp is lit and diagnosis code is displayed on third establishment of code generation conditions.)
- Motor circuit remains stuck as detected by electronic drive unit for 2 seconds.
- Actual valve position remains 10 mm {0.39 in.} or more apart from target full opening position for 10 seconds.

[Diagnosis check timing]
- Fault diagnosis is continuously performed during the driving cycle.

[Diagnostic requirement]
- Controller area network communication in order

[Control effected by electronic control unit during fault]
Electronic control unit differs in the way of control by the diagnosis check item.
<Power supply circuit>
- Exhaust gas recirculation control is stopped.
- Throttle controls disabled
- Diesel particulate filter regeneration is stopped (manual regeneration is feasible).
- Related fault check is stopped.

<Valve opening>
- Exhaust gas recirculation control is stopped.
- Throttle controls disabled
- Post injection is inhibited.
- Diesel particulate filter regeneration is stopped (manual regeneration is feasible).
- Related fault check is stopped.

[Probable cause of trouble]
- Failure of exhaust gas recirculation system

[Recoverability]
- Recovered if signal becomes normal when starter switch is turned OFF to ON (power supply resumed to electronic control unit).
  (Warning lamp is extinguished and diagnosis code is cleared at fourth display of diagnosis code after recovery.)

[Fault diagnosis]

- Perform checks in the sequence of the following steps.

Step 1	Inspection items		Inspection by control data
	Maintenance item		Check if following diagnosis codes occur simultaneously. • P0403 “EGR1 (Actuator Circuit)” • P0404 “EGR System” • P0605 “ECU System (Hardware)” • P0607 “ECU System” • P0685 “EDU Relay (Open)” • P0686 “EDU Relay (Low)” • P0687 “EDU Relay (High)” • P1632 “CAN (EGR1 Time out)” • U0001 “High Speed CAN Communication” • U0002 “High Speed CAN Communication”
	Inspection condition		• Starter switch: ON • Engine: stopped
	Requirements		Codes occur.
	Inspection result (Is the judging standard satisfied?)	YES	Inspect diagnosis code that is occurring.
		NO	Replacement of exhaust gas recirculation valve

[Fault code]
Diagnosis code: P0409/Flash code: 67
[Monitor]
Failure of exhaust gas recirculation valve
[Fault (outline)]
- Low signal range check
- High signal range check

[Diagnosis check]
- Exhaust gas recirculation electronic drive unit monitors exhaust gas recirculation valve internal circuit for fault (through throttle position sensor).

[Code generation condition]
- Position sensor output voltage remains 0 V (low pulse) or 8 to 11 V (high pulse) for 1 second.
  (Warning lamp is lit and diagnosis code is displayed on third establishment of code generation conditions.)

[Diagnosis check timing]
- Fault diagnosis is continuously performed during the driving cycle.

[Diagnostic requirement]
- Controller area network communication in order

[Control effected by electronic control unit during fault]
- Exhaust gas recirculation control is stopped.
- Throttle controls disabled
- Diesel particulate filter regeneration is stopped (manual regeneration is feasible).
- Related fault check is stopped.

[Probable cause of trouble]
- Open-circuit or short-circuit of harness between electronic drive unit and exhaust gas recirculation valve (position sensor)
- Malfunction of each connector
- Malfunction of electronic drive unit

[Recoverability]
- Recovered if signal becomes normal when starter switch is turned OFF to ON (power supply resumed to electronic control unit).
  (Warning lamp is extinguished and diagnosis code is cleared at fourth display of diagnosis code after recovery.)

[Electronic Control Unit Connection Diagram]

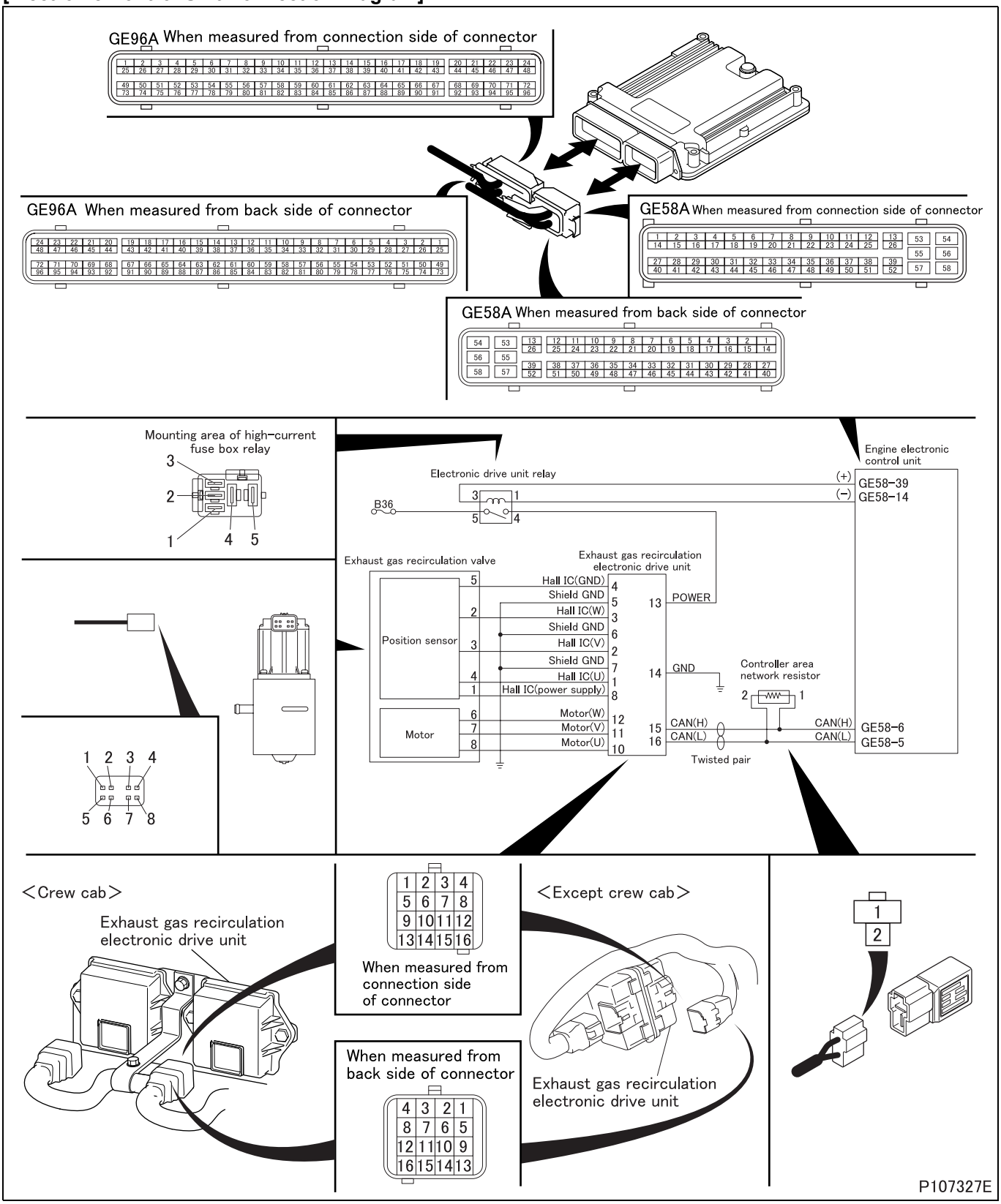

[Parts Identification and Location]

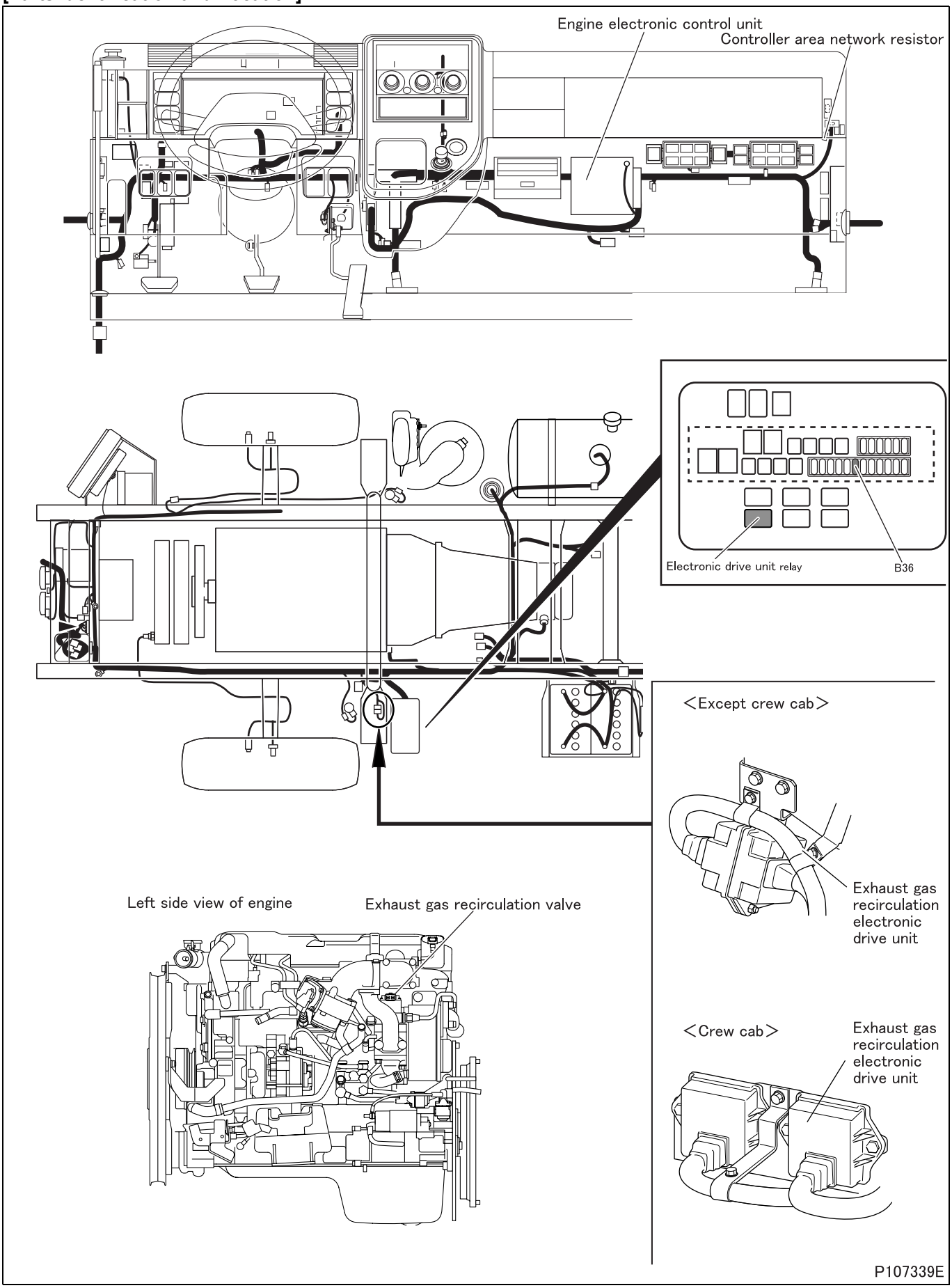

[Fault diagnosis]

- Perform checks in the sequence of the following steps.

Step 1	Inspection items		Inspection by control data
	Maintenance item		Perform actuator test item No. A0 “EGR 1” **NOTE** • **As initial operational check of exhaust gas recirculation valve is automatically effected immediately after starter switch is ON, perform actuator test by Multi-Use Tester after that check (approximately 5 seconds later).**
	Inspection condition		• Vehicle: stationary (vehicle speed 0 km/h {0 MPH}) • Starter switch: ON (engine started) • Transmission: neutral • Diagnosis switch: OFF (fuse removed)
	Requirements		Actual position matches with target value set by Multi-Use Tester. (check with service data “51: Actual EGR Valve Position”)
	Inspection result (Is the judging standard satisfied?)	YES	Go to transient fault (See Gr00.).
		NO	Go to step 2.

Step 2	Inspection items		Inspection of electronic drive unit connector
	Maintenance item		Inspection of connector
	Inspection condition		–
	Requirements		• Connector is properly connected. • No trace of water entry is found. • No corrosion is found in terminal. • Connection to terminal is appropriate.
	Inspection result (Is the judging standard satisfied?)	YES	Go to step 3.
		NO	Modify connector.

Step 3	Inspection items		Inspection of exhaust gas recirculation valve connector
	Maintenance item		Inspection of connector
	Inspection condition		–
	Requirements		• Connector is properly connected. • No trace of water entry is found. • No corrosion is found in terminal. • Connection to terminal is appropriate.
	Inspection result (Is the judging standard satisfied?)	YES	Go to step 4.
		NO	Modify connector.

Step 4	Inspection items		Inspection by control data
	Maintenance item		Check if following diagnosis codes occur simultaneously. • P0685 “EDU Relay (Open)” • P0686 “EDU Relay (Low)” • P0687 “EDU Relay (High)”
	Inspection condition		Starter switch: ON
	Requirements		No codes occur.
	Inspection result (Is the judging standard satisfied?)	YES	Go to step 5.
		NO	Inspect diagnosis code that is occurring.

Step 5	Inspection items		Inspection of electronic drive unit connector (power supply)
	Maintenance item		Measure value of voltage between connector terminal No. 13 (+) and 14 (–).
	Inspection condition		• Remove connector and measure from harness side. • Starter switch: ON • Perform actuator test item No. AF “EDU Relay”
	Requirements		Same as battery voltage.
	Inspection result (Is the judging standard satisfied?)	YES	Go to step 10.
		NO	Go to step 6.

Step 6	Inspection items		Inspection of relay connector
	Maintenance item		Inspection of connector
	Inspection condition		–
	Requirements		• Connector is properly connected. • No trace of water entry is found. • No corrosion is found in terminal. • Connection to terminal is appropriate.
	Inspection result (Is the judging standard satisfied?)	YES	Go to step 7.
		NO	Modify connector.

Step 7	Inspection items		Inspection of harness between fuse and relay
	Maintenance item		Check circuit between fuse No. B35 and relay connector terminal No. 5
	Inspection condition		Disconnect each device from harness and measure from connection side of harness connector.
	Requirements		There is continuity.
	Inspection result (Is the judging standard satisfied?)	YES	Go to step 8.
		NO	Modify harness.

Step 8	Inspection items		Inspection of harness between relay and electronic drive unit
	Maintenance item		Check circuit between relay connector terminal No. 4 and electronic drive unit connector terminal No. 13
	Inspection condition		Disconnect each device from harness and measure from connection side of harness connector.
	Requirements		There is continuity.
	Inspection result (Is the judging standard satisfied?)	YES	After replacement of electronic drive unit relay, go to step 9
		NO	Modify harness.

Step 9	Inspection items		Inspection of harness between electronic drive unit and ground
	Maintenance item		Check circuit between following electronic drive unit connector • Electronic drive unit ground: terminal No. 14 - chassis ground • Sensor shield ground (U): terminal No. 5 - 14 • Sensor shield ground (V): terminal No. 6 - 14 • Sensor shield ground (W): terminal No. 7 - 14 • Sensor ground: terminal No. 4 - 14
	Inspection condition		Disconnect each device from harness and measure from connection side of harness connector.
	Requirements		There is continuity.
	Inspection result (Is the judging standard satisfied?)	YES	Go to step 10.
		NO	Modify harness.

Step 10	Inspection items		Inspection of electronic drive unit connector (motor)
	Maintenance item		Measure value of resistance between following connector terminals. • Between U - V: 10 - 11 • Between U - W: 10 - 12 • Between V - W: 11 - 12
	Inspection condition		–
	Requirements		2.1 ± 0.3 Ω
	Inspection result (Is the judging standard satisfied?)	YES	Go to step 13.
		NO	Go to step 11.

Step 11	Inspection items		Inspection of harness between electronic drive unit and exhaust gas recirculation valve (motor)
	Maintenance item		Check circuit between following connector terminals. • Motor (U): electronic drive unit connector terminal No. 10 - exhaust gas recirculation valve connector terminal No. 8 • Motor (V): electronic drive unit connector terminal No. 11 - exhaust gas recirculation valve connector terminal No. 7 • Motor (W): electronic drive unit connector terminal No. 12 - exhaust gas recirculation valve connector terminal No. 6
	Inspection condition		Disconnect each device from harness and measure from connection side of harness connector.
	Requirements		There is continuity.
	Inspection result (Is the judging standard satisfied?)	YES	Go to step 12.
		NO	Modify harness.

Step 12	Inspection items		Inspection of exhaust gas recirculation valve unit (motor)
	Maintenance item		Measure value of resistance between following exhaust gas recirculation valve connector terminals • Between U - V: 8 - 7 • Between U - W: 8 - 6 • Between V - W: 7 - 6
	Inspection condition		• Keep exhaust gas recirculation valve installed on vehicle. • Remove harness connector, and measure exhaust gas recirculation valve side.
	Requirements		2.1 ± 0.3 Ω
	Inspection result (Is the judging standard satisfied?)	YES	Go to step 13.
		NO	Replacement of exhaust gas recirculation valve

<Step 12 inspection diagram>

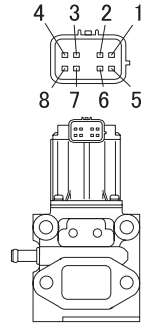

Step 13	Inspection items		Inspection of exhaust gas recirculation valve connector (position sensor: power supply)
	Maintenance item		Measure value of voltage between connector terminal No. 1 (+) and 5 (–).
	Inspection condition		• Measure from back side of connector of harness with each device connected to harness. • Starter switch: ON
	Requirements		10 V
	Inspection result (Is the judging standard satisfied?)	YES	Go to step 14.
		NO	Go to step 15.

Step 14	Inspection items		Inspection of electronic drive unit connector (position sensor: signal)
	Maintenance item		Measure value of voltage between following electronic drive unit connector terminals • U signal output: terminal 1 (+) - 4 (–) • V signal output: terminal 2 (+) - 4 (–) • W signal output: terminal 3 (+) - 4 (–)
	Inspection condition		• Measure from back side of connector of harness with each device connected to harness. • Starter switch: ON • Perform Multi-Use Tester actuator test item No. A0 “EGR 1”
	Requirements		8 to 11 V
	Inspection result (Is the judging standard satisfied?)	YES	Go to step 16.
		NO	Go to step 15.

Step 15	Inspection items		Inspection of harness between electronic drive unit and exhaust gas recirculation valve (position sensor)
	Maintenance item		Check circuit between following connector terminals. • Sensor (power supply): electronic drive unit connector terminal No. 8 - exhaust gas recirculation valve connector terminal No. 1 • Sensor (U): electronic drive unit connector terminal No. 1 - exhaust gas recirculation valve connector terminal No. 4 • Sensor (V): electronic drive unit connector terminal No. 2 - exhaust gas recirculation valve connector terminal No. 3 • Sensor (W): electronic drive unit connector terminal No. 3 - exhaust gas recirculation valve connector terminal No. 2 • Sensor (ground): electronic drive unit connector terminal No. 4 - exhaust gas recirculation valve connector terminal No. 5
	Inspection condition		Disconnect each device from harness and measure from connection side of harness connector.
	Requirements		There is continuity.
	Inspection result (Is the judging standard satisfied?)	YES	After replacement of exhaust gas recirculation valve, go to step 16.
		NO	Modify harness.

Step 16	Inspection items		Inspection by control data
	Maintenance item		Perform actuator test item No. A0 “EGR 1” **NOTE** • **As initial operational check of exhaust gas recirculation valve is automatically effected immediately after starter switch is ON, perform actuator test by Multi-Use Tester after that check (approximately 5 seconds later).**
	Inspection condition		• Vehicle: stationary (vehicle speed 0 km/h {0 MPH}) • Starter switch: ON (engine started) • Transmission: neutral • Diagnosis switch: OFF (fuse removed)
	Requirements		Actual position matches with target value set by Multi-Use Tester. (check with service data “51: Actual EGR Valve Position”)
	Inspection result (Is the judging standard satisfied?)	YES	Go to transient fault (See Gr00.).
		NO	Replacement of electronic drive unit

[Fault code]
Diagnosis code: P0426/Flash code: 42
[Monitor]
Characteristic abnormality of catalytic temperature sensor
[Fault (outline)]
Gain and offset drift
[Diagnosis check]
- Catalytic temperature sensor and DPF temperature sensor 1 are compared.

[Code generation condition]
- Difference in temperature output remains excessively high (over 150°C {302°F}) or low (below –150°C {–238°F}) for 10 seconds <Relative check> and 20 seconds <Separate check>. (Warning lamp is lit and diagnosis code is displayed on third establishment of code generation condition.)

[Diagnosis check timing]
- Fault diagnosis is performed only once during the driving cycle.

[Diagnostic requirement]
- Diesel particulate filter regeneration control: not effected
- Engine running time: more than 300 seconds
- Time after diesel particulate filter regeneration control was effected: more than 1500 seconds
- Engine speed and load: logical output is 1
- Time till above conditions were met: more than 30 seconds
- Catalytic temperature sensor: normal in output signal
- DPF temperature sensor 1: normal in output signal
- DPF temperature sensor 2: normal in output signal
- Sensor 5 V power supply: in order
- Battery voltage: in order
- MPROP (rail pressure control valve): in order
- Injector: in order

[Control effected by electronic control unit during fault]
- Related fault check is stopped.

[Probable cause of trouble]
- Malfunction of catalytic temperature sensor

[Recoverability]
- Recovered if signal becomes normal when starter switch is turned OFF to ON (power supply resumed to electronic control unit).
  (Warning lamp is extinguished and diagnosis code is cleared at fourth display of diagnosis code after recovery.)

[Fault code]
Diagnosis code: P0427/Flash code: 42
[Monitor]
Failure of catalytic temperature sensor
[Fault (outline)]
Low signal range check
[Diagnosis check]
- Catalytic temperature sensor output voltage is monitored.

[Code generation condition]
- Catalytic temperature sensor output voltage remains below 0.36 V for 3 seconds. (sensor temperature: 1000°C {1832°F} or more)
  (Warning lamp is lit and diagnosis code is displayed on third establishment of code generation condition.)

[Diagnosis check timing]
- Fault diagnosis is continuously performed during the driving cycle.

[Diagnostic requirement]
–

[Control effected by electronic control unit during fault]
- Diesel particulate filter regeneration is stopped (manual regeneration is feasible).
- Related fault check is stopped.

[Probable cause of trouble]
- Open-circuit or short-circuit of harness between electronic control unit and sensor
- Malfunction of each connector
- Malfunction of sensor
- Malfunction of electronic control unit
- Malfunction of catalytic temperature sensor

[Recoverability]
- Recovered if signal becomes normal with starter switch in ON position.
  (Warning lamp is extinguished and diagnosis code is cleared at fourth display of diagnosis code after recovery.)

[Electronic Control Unit Connection Diagram]

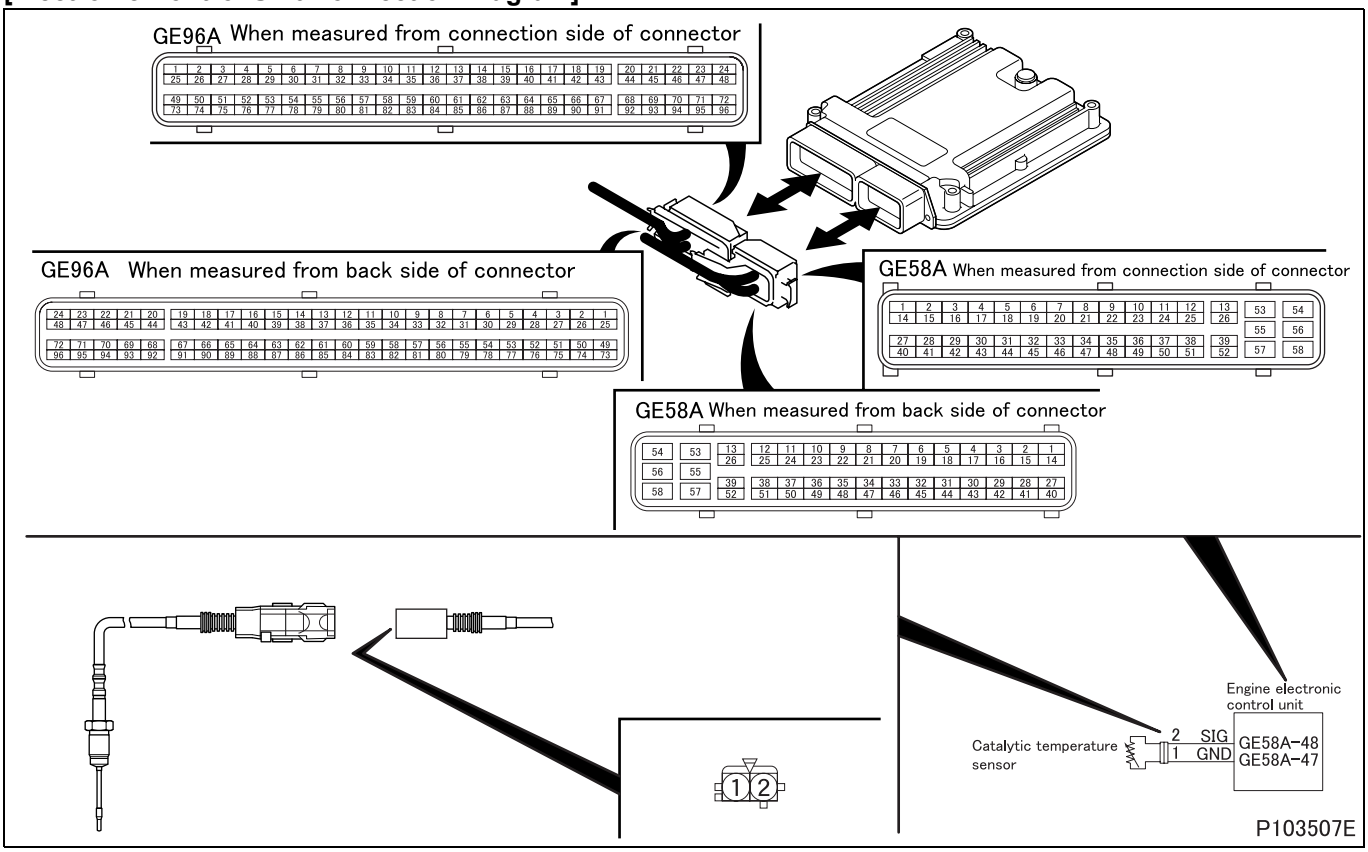

[Parts Identification and Location]

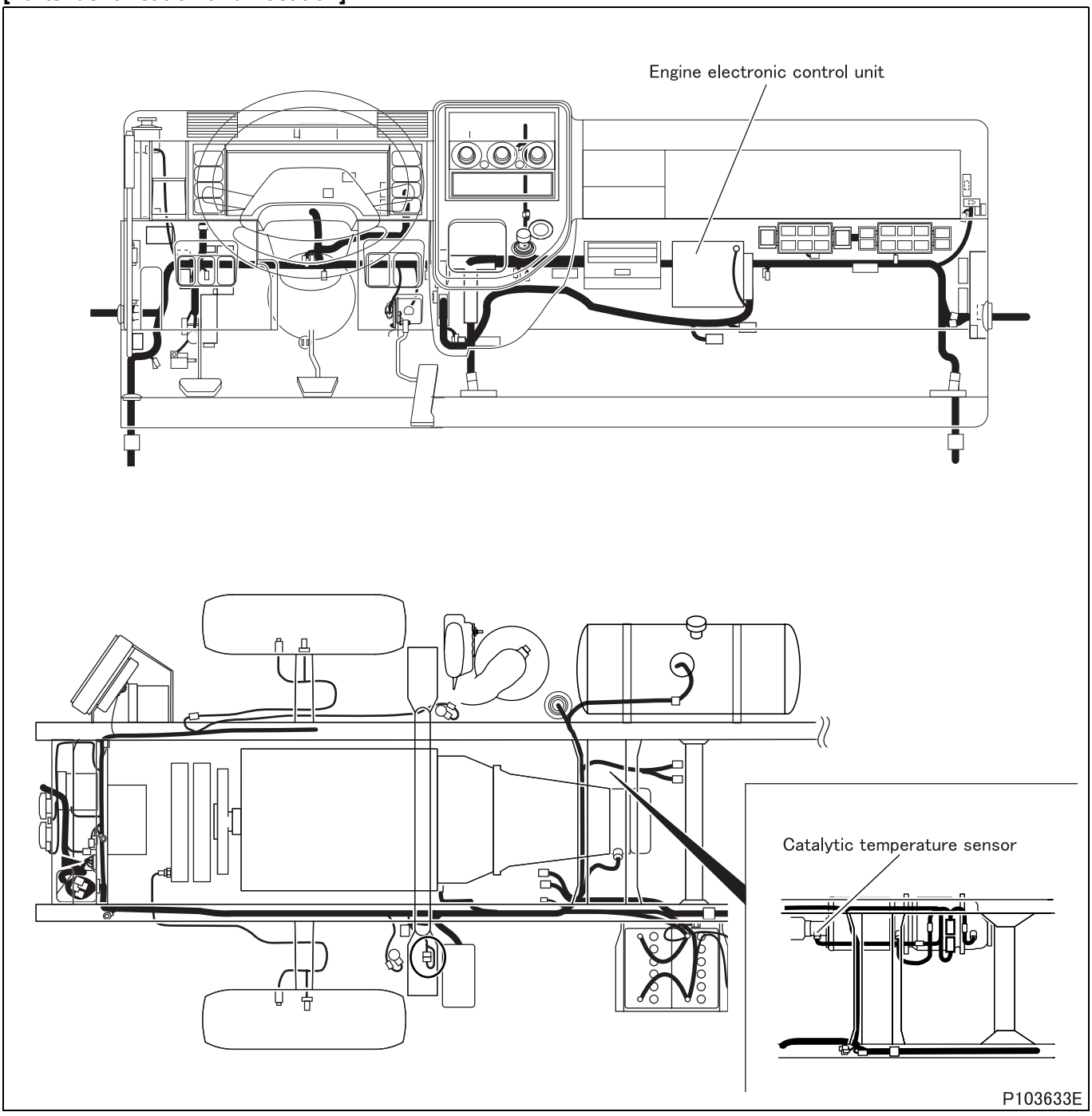

[Fault diagnosis]

- Perform checks in the sequence of the following steps.

Step 1	Inspection items		Inspection by control data
	Maintenance item		**<General Scanning Tool used>** • Measure item “OXI CAT Temperature”. **<Multi-Use Tester used>** • Measure item No. 24 “OXI CAT Temperature” of Service Data.
	Inspection condition		While engine is warmed up
	Requirements		Temperature gradually increases.
	Inspection result (Is the judging standard satisfied?)	YES	Go to transient fault (See Gr00.).
		NO	Go to step 2.

Step 2	Inspection items		Inspection by electronic control unit connector
	Maintenance item		Measure value of resistance between connector (GE58A) terminal No. 48 and 47.
	Inspection condition		• Starter switch: OFF • Disconnect electronic control unit from harness and measure at vehicle-side connector half.
	Requirements		• 20°C {68°F} : 241.8 kΩ • 50°C {122°F} : 106.2 $^{+74.3}_{-41.8}$ kΩ • 100°C {212°F} : 33.56 $^{+17.60}_{-10.60}$ kΩ • 150°C {302°F} : 13.90 $^{+5.36}_{-3.60}$ kΩ • 200°C {392°F} : 6.896 $^{+2.064}_{-1.252}$ kΩ
	Inspection result (Is the judging standard satisfied?)	YES	Go to step 3.
		NO	Go to step 4.

Step 3	Inspection items		Inspection of electronic control unit connector
	Maintenance item		Inspection of connector
	Inspection condition		–
	Requirements		• Connector is properly connected. • No trace of water entry is found. • No corrosion is found in terminal. • Connection to terminal is appropriate.
	Inspection result (Is the judging standard satisfied?)	YES	Go to step 8.
		NO	Modify connector.

Step 4	Inspection items		Inspection of sensor connector
	Maintenance item		Inspection of connector
	Inspection condition		–
	Requirements		• Connector is properly connected. • No trace of water entry is found. • No corrosion is found in terminal. • Connection to terminal is appropriate.
	Inspection result (Is the judging standard satisfied?)	YES	Go to step 5.
		NO	Modify connector.

Step 5	Inspection items		Inspection of catalytic temperature sensor unit
	Maintenance item		Measure value of resistance between connector terminal No. 1 and 2.
	Inspection condition		• Put catalytic temperature sensor in container filled with engine oil. • Heat the oil to each of the specified temperatures. Stir the oil well while doing so.
	Requirements		• 20°C {68°F} : 241.8 kΩ • 50°C {122°F} : 106.2 $^{+74.3}_{-41.8}$ kΩ • 100°C {212°F} : 33.56 $^{+17.60}_{-10.60}$ kΩ • 150°C {302°F} : 13.90 $^{+5.36}_{-3.60}$ kΩ • 200°C {392°F} : 6.896 $^{+2.064}_{-1.252}$ kΩ
	Inspection result (Is the judging standard satisfied?)	YES	Go to step 6.
		NO	Replacement of sensor

<Step 5 inspection diagram>

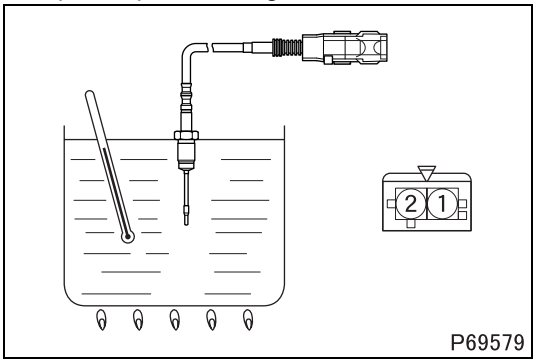

Step 6	Inspection items		Inspection of harness between electronic control unit and sensor (power supply)
	Maintenance item		Check circuit between electronic control unit connector (GE96A) terminal No. 39 and sensor connector terminal No. 2.
	Inspection condition		Disconnect each device from harness and measure from connection side of harness connector.
	Requirements		There is continuity.
	Inspection result (Is the judging standard satisfied?)	YES	Go to step 7.
		NO	Modify harness.

Step 7	Inspection items		Inspection of harness between electronic control unit and sensor (ground)
	Maintenance item		Check circuit between electronic control unit connector (GE96A) terminal No. 68 and sensor connector terminal No. 1.
	Inspection condition		Disconnect each device from harness and measure from connection side of harness connector.
	Requirements		There is continuity.
	Inspection result (Is the judging standard satisfied?)	YES	Go to step 8.
		NO	Modify harness.

Step 8	Inspection items		Inspection by control data
	Maintenance item		**<General Scanning Tool used>** • Measure item “OXI CAT Temperature”. **<Multi-Use Tester used>** • Measure item No. 24 “OXI CAT Temperature” of Service Data.
	Inspection condition		While engine is warmed up
	Requirements		Temperature gradually increases.
	Inspection result (Is the judging standard satisfied?)	YES	Go to transient fault (See Gr00.).
		NO	Replacement of electronic control unit

[Fault code]
Diagnosis code: P0428/Flash code: 42
[Monitor]
Failure of catalytic temperature sensor
[Fault (outline)]
High signal range check
[Diagnosis check]
- Catalytic temperature sensor output voltage is monitored.

[Code generation condition]
- Catalytic temperature sensor output voltage remains over 4.93 V for 30 seconds when engine speed is set at 1000 to 5000 rpm. (sensor temperature: 40°C {118°F} or less) (Warning lamp is lit and diagnosis code is displayed on third establishment of code generation condition.)

[Diagnosis check timing]
- Fault diagnosis is performed only once during the driving cycle.

[Diagnostic requirement]
- Engine speed: 1000 to 5000 rpm
- Fuel injection quantity: 30 to 200 mg/cyc
- Water temperature: above –7°C {19°F}

[Control effected by electronic control unit during fault]
- Diesel particulate filter regeneration is stopped (manual regeneration is feasible).
- Related fault check is stopped.

[Probable cause of trouble]
- Open-circuit or short-circuit of harness between electronic control unit and sensor
- Malfunction of each connector
- Malfunction of sensor
- Malfunction of electronic control unit
- Malfunction of catalytic temperature sensor

[Recoverability]
- Recovered if signal becomes normal with starter switch in ON position.
  (Warning lamp is extinguished and diagnosis code is cleared at fourth display of diagnosis code after recovery.)

[Electronic Control Unit Connection Diagram]

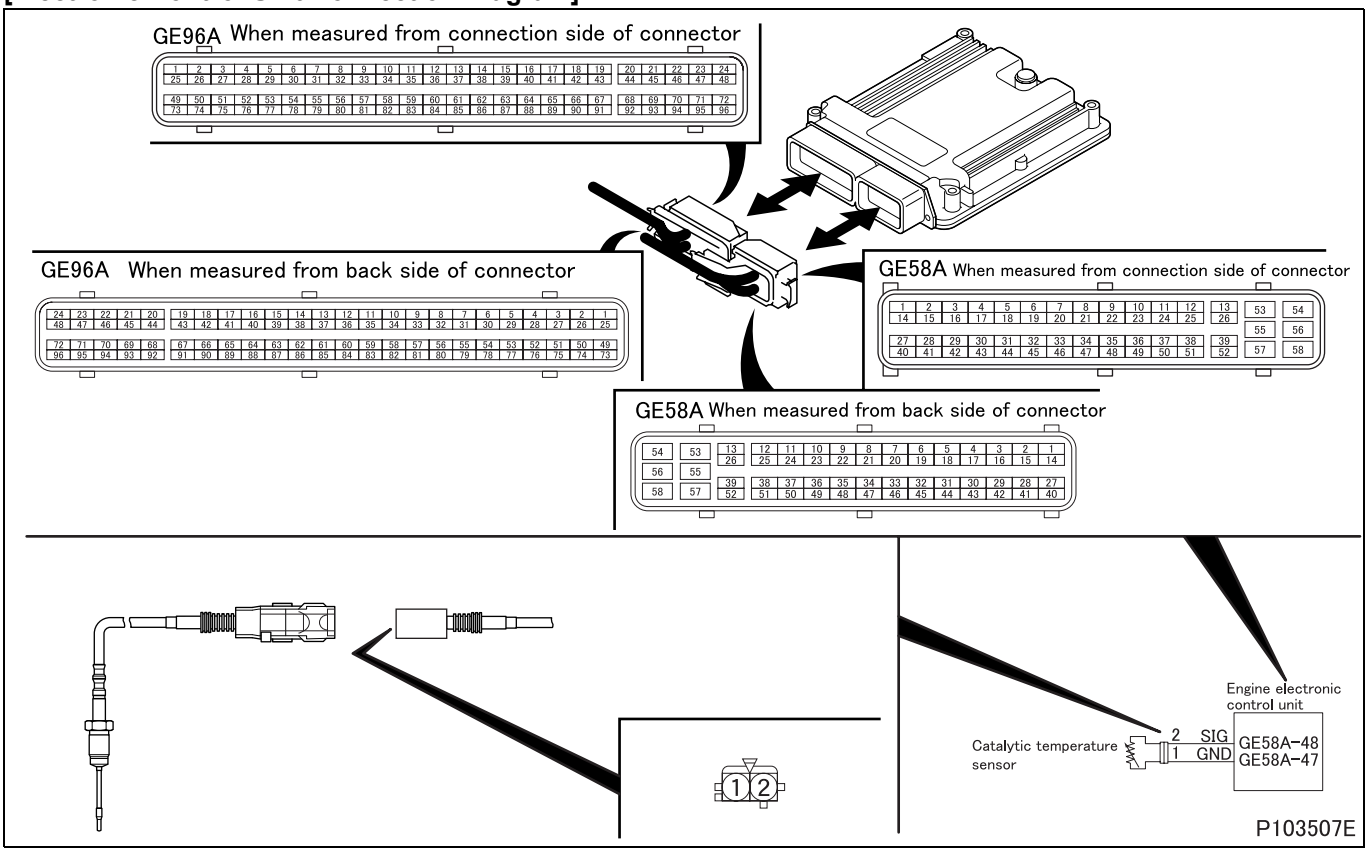

[Parts Identification and Location]

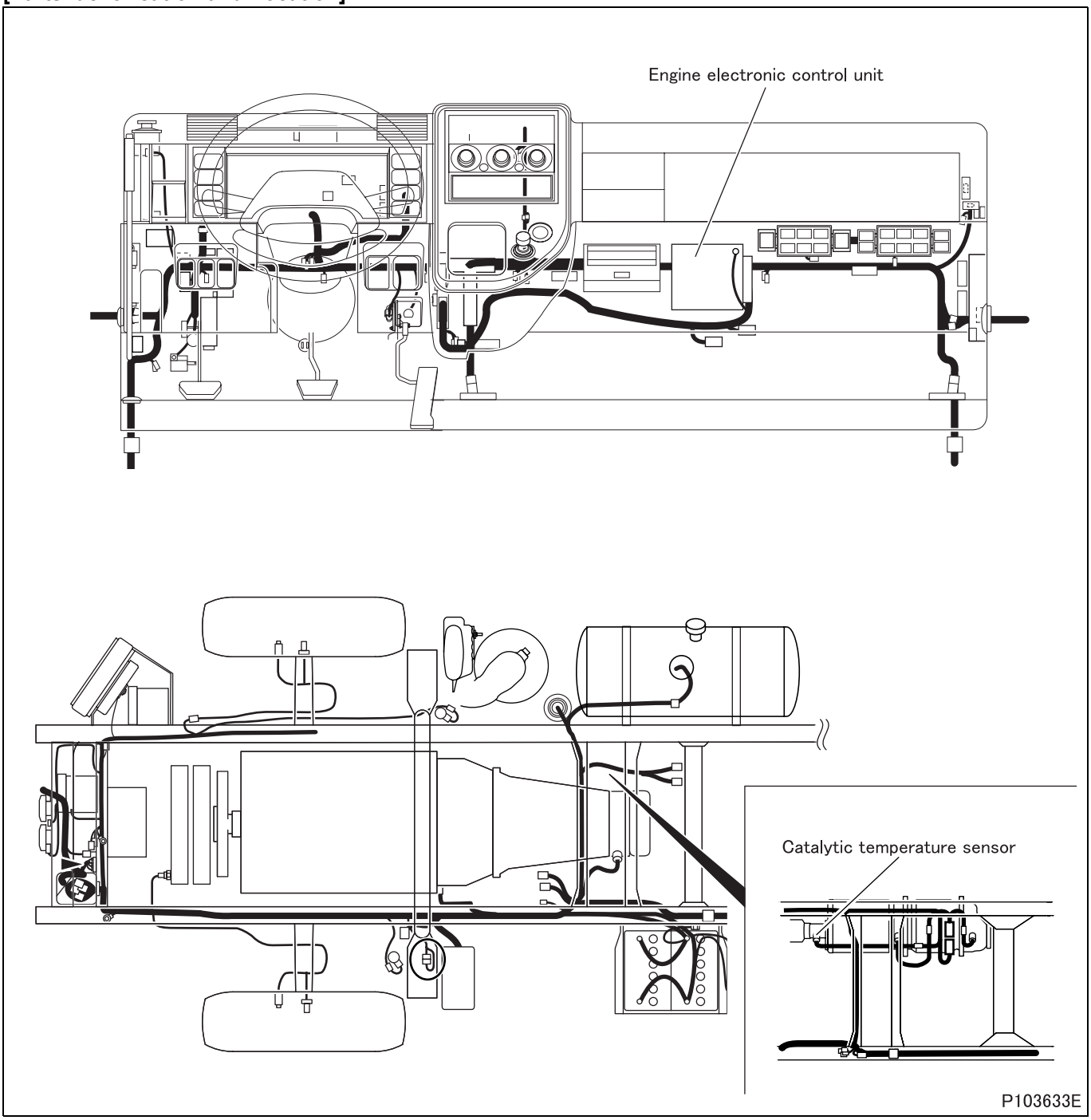

[Fault diagnosis]

- Perform checks in the sequence of the following steps.

Step 1	Inspection items		Inspection by control data
	Maintenance item		**<General Scanning Tool used>** • Measure item “OXI CAT Temperature”. **<Multi-Use Tester used>** • Measure item No. 24 “OXI CAT Temperature” of Service Data.
	Inspection condition		While engine is warmed up
	Requirements		Temperature gradually increases.
	Inspection result (Is the judging standard satisfied?)	YES	Go to transient fault (See Gr00.).
		NO	Go to step 2.

Step 2	Inspection items		Inspection by electronic control unit connector
	Maintenance item		Measure value of resistance between connector (GE58A) terminal No. 48 and 47.
	Inspection condition		• Starter switch: OFF • Disconnect electronic control unit from harness and measure at vehicle-side connector half.
	Requirements		• 20°C {68°F} : 241.8 kΩ • 50°C {122°F} : 106.2 $^{+74.3}_{-41.8}$ kΩ • 100°C {212°F} : 33.56 $^{+17.60}_{-10.60}$ kΩ • 150°C {302°F} : 13.90 $^{+5.36}_{-3.60}$ kΩ • 200°C {392°F} : 6.896 $^{+2.064}_{-1.252}$ kΩ
	Inspection result (Is the judging standard satisfied?)	YES	Go to step 3.
		NO	Go to step 4.

Step 3	Inspection items		Inspection of electronic control unit connector
	Maintenance item		Inspection of connector
	Inspection condition		–
	Requirements		• Connector is properly connected. • No trace of water entry is found. • No corrosion is found in terminal. • Connection to terminal is appropriate.
	Inspection result (Is the judging standard satisfied?)	YES	Go to step 8.
		NO	Modify connector.

Step 4	Inspection items		Inspection of sensor connector
	Maintenance item		Inspection of connector
	Inspection condition		–
	Requirements		• Connector is properly connected. • No trace of water entry is found. • No corrosion is found in terminal. • Connection to terminal is appropriate.
	Inspection result (Is the judging standard satisfied?)	YES	Go to step 5.
		NO	Modify connector.

Step 5	Inspection items		Inspection of catalytic temperature sensor unit
	Maintenance item		Measure value of resistance between connector terminal No. 1 and 2.
	Inspection condition		• Put catalytic temperature sensor in container filled with engine oil. • Heat the oil to each of the specified temperatures. Stir the oil well while doing so.
	Requirements		• 20°C {68°F} : 241.8 kΩ • 50°C {122°F} : 106.2 $^{+74.3}_{-41.8}$ kΩ • 100°C {212°F} : 33.56 $^{+17.60}_{-10.60}$ kΩ • 150°C {302°F} : 13.90 $^{+5.36}_{-3.60}$ kΩ • 200°C {392°F} : 6.896 $^{+2.064}_{-1.252}$ kΩ
	Inspection result (Is the judging standard satisfied?)	YES	Go to step 6.
		NO	Replacement of sensor

<Step 5 inspection diagram>

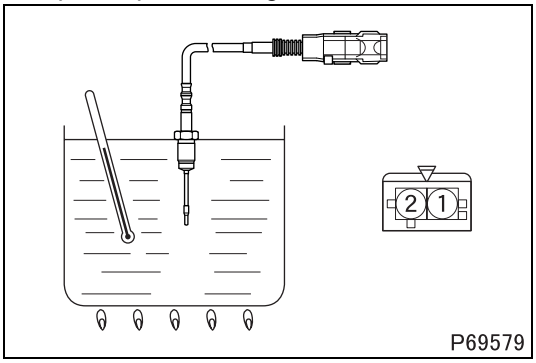

Step 6	Inspection items		Inspection of harness between electronic control unit and sensor (power supply)
	Maintenance item		Check circuit between electronic control unit connector (GE96A) terminal No. 39 and sensor connector terminal No. 2.
	Inspection condition		Disconnect each device from harness and measure from connection side of harness connector.
	Requirements		There is continuity.
	Inspection result (Is the judging standard satisfied?)	YES	Go to step 7.
		NO	Modify harness.

Step 7	Inspection items		Inspection of harness between electronic control unit and sensor (ground)
	Maintenance item		Check circuit between electronic control unit connector (GE96A) terminal No. 68 and sensor connector terminal No. 1.
	Inspection condition		Disconnect each device from harness and measure from connection side of harness connector.
	Requirements		There is continuity.
	Inspection result (Is the judging standard satisfied?)	YES	Go to step 8.
		NO	Modify harness.

Step 8	Inspection items		Inspection by control data
	Maintenance item		**<General Scanning Tool used>** • Measure item “OXI CAT Temperature”. **<Multi-Use Tester used>** • Measure item No. 24 “OXI CAT Temperature” of Service Data.
	Inspection condition		While engine is warmed up
	Requirements		Temperature gradually increases.
	Inspection result (Is the judging standard satisfied?)	YES	Go to transient fault (See Gr00.).
		NO	Replacement of electronic control unit

[Fault code]
Diagnosis code: P0470/Flash code: 92
[Monitor]
Characteristic abnormality of DPF absolute pressure sensor and DPF pressure sensor (DIFF)
[Fault (outline)]
- Gain drift
- Offset and gain drift

[Diagnosis check]
- Relative check of DPF absolute pressure sensor and DPF pressure sensor (DIFF)

[Code generation condition]
- Difference in output between DPF pressure sensor (DIFF) and DPF absolute pressure sensor remains more than specified for 10 seconds. (Warning lamp is lit and diagnosis code is displayed on third establishment of code generation condition.)

[Diagnosis check timing]
- Fault diagnosis is performed only once during the driving cycle.

[Diagnostic requirement]
- Engine speed: 500 to 3000 rpm
- Air flow rate: 80 to 650 kg/hr
- Water temperature: 0 to 110°C {32 to 230°F}
- Fuel injection quantity: 15 to 100 mg/cyc
- Atmospheric pressure: 900 to 1050 mbar {13.05 to 15.22 psi}
- Intake air temperature: 0 to 60°C {32 to 140°F}
- Air flow sensor: in order
- Atmospheric pressure sensor: in order
- Water temperature sensor: in order
- Intake air temperature sensor: in order
- DPF absolute pressure sensor: normal in output signal
- DPF pressure sensor (DIFF): normal in output signal
- DPF temperature sensor 1: in order
- Sensor 5 V power supply: in order
- Battery voltage: in order
- MPROP (rail pressure control valve): in order
- Relative check of DPF absolute pressure sensor

[Control effected by electronic control unit during fault]
- Related fault check is stopped.

[Probable cause of trouble]
- Malfunction of DPF absolute pressure sensor and DPF pressure sensor (DIFF)

[Recoverability]
- Recovered if signal becomes normal when starter switch is turned OFF to ON (power supply resumed to electronic control unit).
  (Warning lamp is extinguished and diagnosis code is cleared at fourth display of diagnosis code after recovery.)

[Fault code]
Diagnosis code: P0471/Flash code: 98
[Monitor]
Failure of DPF absolute pressure sensor
[Fault (outline)]
Offset drift
[Diagnosis check]
- Difference in pressure output between atmospheric pressure sensor and DPF absolute pressure sensor is monitored for deviation from specified value after engine start.

[Code generation condition]
- Difference in pressure output between atmospheric pressure sensor and DPF absolute pressure sensor exceeds 10 kPa {1.5 psi, 0.1 kgf/cm^2} after engine run.
  (Warning lamp is lit and diagnosis code is displayed on third establishment of code generation conditions.)

[Diagnosis check timing]
- Fault diagnosis is performed only once during the driving cycle.

[Diagnostic requirement]
- Engine status: after-run

[Control effected by electronic control unit during fault]
- Pressure before ceramic diesel particulate filter is fixed at backup value.
- Particulate matter deposit computation is stopped.
- Related fault check is stopped.
- Malfunction of DPF absolute pressure sensor

[Probable cause of trouble]
- Open-circuit or short-circuit of harness between electronic control unit and sensor
- Malfunction of each connector
- High pressure side (upper stream) pressure hose slipped off or clogged
- Malfunction of sensor
- Malfunction of electronic control unit

[Recoverability]
- Recovered if signal becomes normal with starter switch in ON position.
  (Warning lamp is extinguished and diagnosis code is cleared at fourth display of diagnosis code after recovery.)

[Electronic Control Unit Connection Diagram]

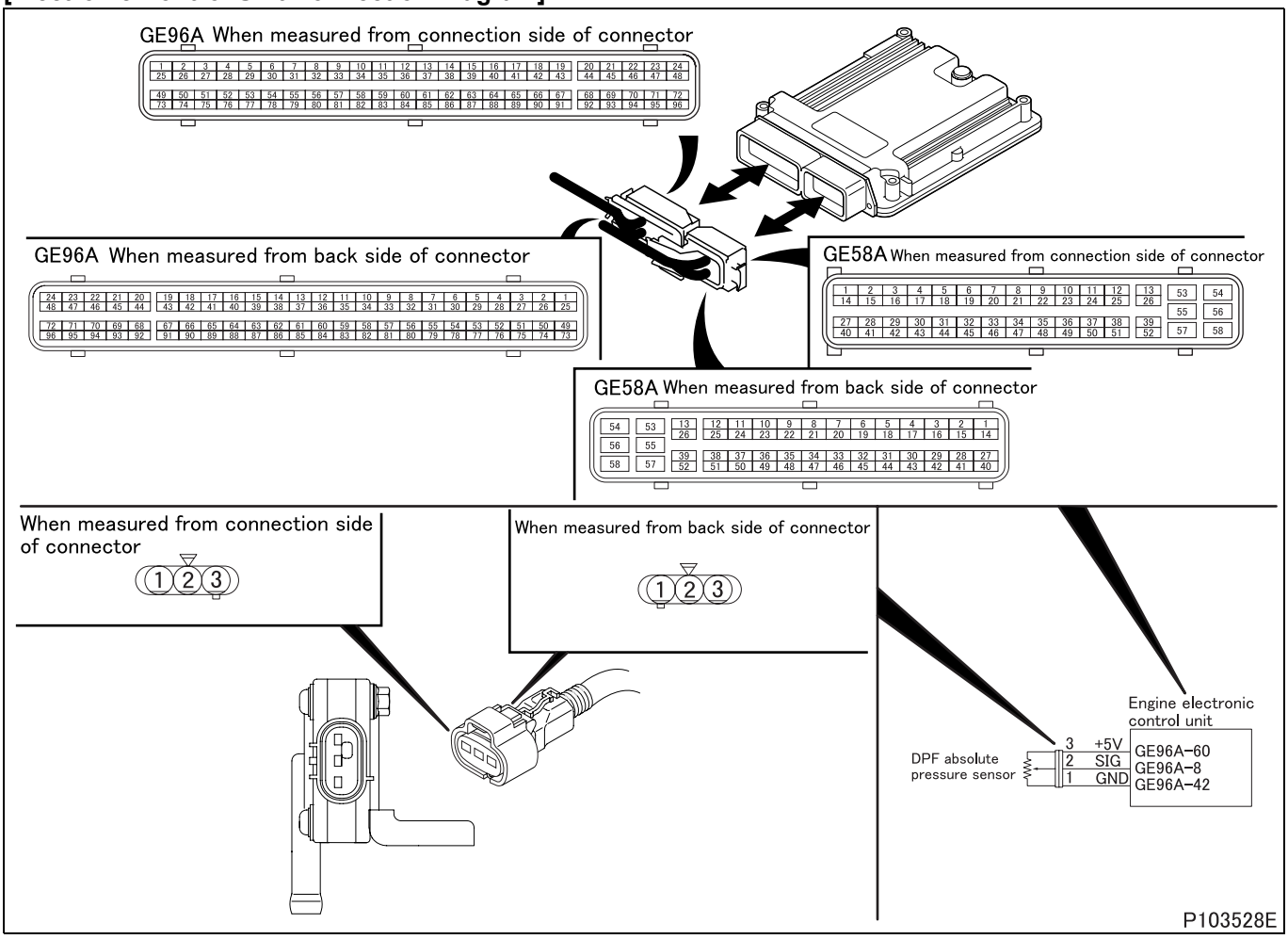

[Parts Identification and Location]

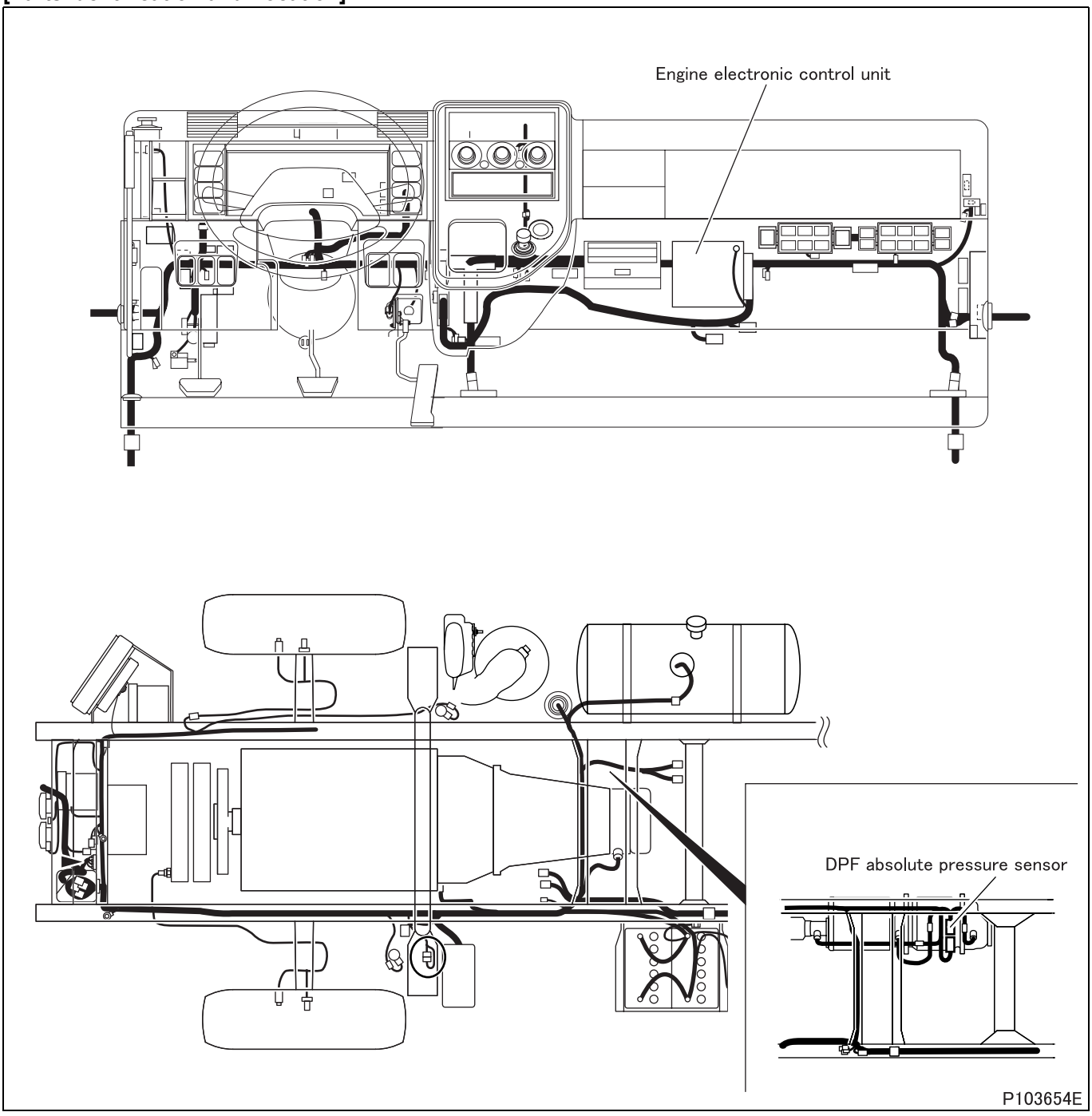

[Fault diagnosis]

- Perform checks in the sequence of the following steps.

Step 1	Inspection items		Inspection by control data
	Maintenance item		Check if following diagnosis codes occur simultaneously. • P2453 “DPF Diff SNSR (Plausi) & MFF” • P2454 “DPF Diff SNSR (Low) & MFF” • P2455 “DPF Diff SNSR (High) & MFF”
	Inspection condition		Starter switch: ON Engine: stopped
	Requirements		Codes occur.
	Inspection result (Is the judging standard satisfied?)	YES	Inspect diagnosis code that is occurring.
		NO	Go to step 2.

Step 2	Inspection items		Inspection by control data
	Maintenance item		Measure item No. 23 “Exhaust gas pressure” of Service Data.
	Inspection condition		–
	Requirements		0 kPa {0 psi, 0 kgf/cm^2}
	Inspection result (Is the judging standard satisfied?)	YES	Go to transient fault (See Gr00.).
		NO	Go to step 3.

Step 3	Inspection items		Inspection by electronic control unit connector (signal)
	Maintenance item		Measure value of voltage between connector (GE96A) terminal No. 8 (+) and 42 (–).
	Inspection condition		• Starter switch: ON • Engine: stopped • Measure from back side of connector of harness with each device connected to harness.
	Requirements		1.875 to 4.5 V
	Inspection result (Is the judging standard satisfied?)	YES	Go to step 6.
		NO	Go to step 4.

Step 4	Inspection items		Inspection by electronic control unit connector (power supply)
	Maintenance item		Measure value of voltage between connector (GE96A) terminal No. 60 (+) and 42 (–).
	Inspection condition		• Starter switch: ON • Engine: stopped • Measure from back side of connector of harness with each device connected to harness.
	Requirements		5 V
	Inspection result (Is the judging standard satisfied?)	YES	Go to step 5.
		NO	Go to step 6.

Step 5	Inspection items		Inspection by electronic control unit connector (ground)
	Maintenance item		Measure value of voltage between connector (GE96A) terminal No. 42 (+) and (GE58A) terminal No. 53 (–).
	Inspection condition		• Starter switch: ON • Engine: stopped • Measure from back side of connector of harness with each device connected to harness.
	Requirements		0 V
	Inspection result (Is the judging standard satisfied?)	YES	Go to step 7.
		NO	Go to step 6.

Step 6	Inspection items		Inspection of electronic control unit connector
	Maintenance item		Inspection of connector
	Inspection condition		–
	Requirements		• Connector is properly connected. • No trace of water entry is found. • No corrosion is found in terminal. • Connection to terminal is appropriate.
	Inspection result (Is the judging standard satisfied?)	YES	Go to step 13.
		NO	Modify connector.

Step 7	Inspection items		Inspection of sensor connector
	Maintenance item		Inspection of connector
	Inspection condition		–
	Requirements		• Connector is properly connected. • No trace of water entry is found. • No corrosion is found in terminal. • Connection to terminal is appropriate.
	Inspection result (Is the judging standard satisfied?)	YES	Go to step 8.
		NO	Modify connector.

Step 8	Inspection items		Inspection of DPF absolute pressure sensor unit
	Maintenance item		Measure value of voltage between terminal No. 2 (+) and 1 (–).
	Inspection condition		• Apply voltage DC 5 V across connector terminals No. 3 (+) and 1 (–). • Gradually increase applied air pressure.
	Requirements		• 41 ± 3.2 kPa {5.9 ± 0.5 psi, 0.43 ± 0.03 kgf/cm^2}: 1.875 V • 99 ± 3.2 kPa {14 ± 0.5 psi, 1.0 ± 0.03 kgf/cm^2}: 4.5 V
	Inspection result (Is the judging standard satisfied?)	YES	Go to step 9.
		NO	Replacement of sensor

<Step 8 inspection diagram>

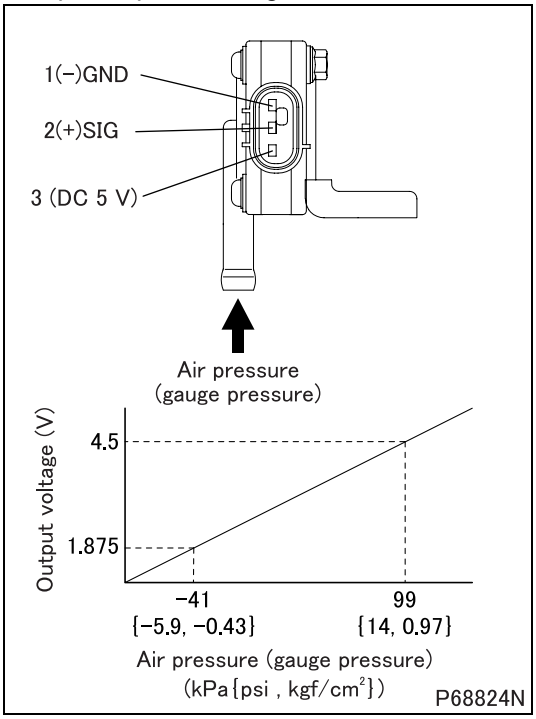

Step 9	Inspection items		Inspection by sensor connector
	Maintenance item		Measure value of voltage between terminal No. 3 (+) and 1 (–)
	Inspection condition		• Starter switch: ON • Engine: stopped • Measure from back side of connector of harness with each device connected to harness.
	Requirements		5 V
	Inspection result (Is the judging standard satisfied?)	YES	Go to step 11.
		NO	Go to step 10.

Step 10	Inspection items		Inspection of harness between electronic control unit and sensor (power supply)
	Maintenance item		Check circuit between electronic control unit connector (GE96A) terminal No. 60 and sensor connector terminal No. 3.
	Inspection condition		Disconnect each device from harness and measure from connection side of harness connector.
	Requirements		There is continuity.
	Inspection result (Is the judging standard satisfied?)	YES	Go to step 13.
		NO	Modify harness.

Step 11	Inspection items		Inspection of harness between electronic control unit and sensor (ground)
	Maintenance item		Check circuit between electronic control unit connector (GE96A) terminal No. 42 and sensor connector terminal No. 1.
	Inspection condition		Disconnect each device from harness and measure from connection side of harness connector.
	Requirements		There is continuity.
	Inspection result (Is the judging standard satisfied?)	YES	Go to step 12.
		NO	Modify harness.

Step 12	Inspection items		Inspection of harness between electronic control unit and sensor (signal)
	Maintenance item		Check circuit between electronic control unit connector (GE96A) terminal No. 8 and sensor connector terminal No. 2.
	Inspection condition		Disconnect each device from harness and measure from connection side of harness connector.
	Requirements		There is continuity.
	Inspection result (Is the judging standard satisfied?)	YES	Go to step 13.
		NO	Modify harness.

Step 13	Inspection items		Inspection by control data
	Maintenance item		Measure item No. 23 “Exhaust gas pressure” of Service Data.
	Inspection condition		–
	Requirements		0 kPa {0 psi, 0 kgf/cm^2}
	Inspection result (Is the judging standard satisfied?)	YES	Go to transient fault (See Gr00.).
		NO	Replacement of electronic control unit

[Fault code]
Diagnosis code: P0472/Flash code: 98
[Monitor]
Failure of DPF absolute pressure sensor
[Fault (outline)]
Low signal range check
[Diagnosis check]
- Output voltage of DPF absolute pressure sensor is monitored.

[Code generation condition]
- Output voltage of DPF absolute pressure sensor remains below 0.2 V for 1 second. (sensor pressure: –29 kPa {–4.2 psi, –0.3 kgf/cm^2} or less)
  (Warning lamp is lit and diagnosis code is displayed on third establishment of code generation conditions.)

[Diagnosis check timing]
- Fault diagnosis is continuously performed during the driving cycle.

[Diagnostic requirement]
–

[Control effected by electronic control unit during fault]
- Pressure before ceramic diesel particulate filter is fixed at backup value.
- Particulate matter deposit computation is stopped.
- Related fault check is stopped.

[Probable cause of trouble]
- Open-circuit or short-circuit of harness between electronic control unit and sensor
- Malfunction of each connector
- Malfunction of sensor
- Malfunction of electronic control unit

[Recoverability]
- Recovered if signal becomes normal with starter switch in ON position.
  (Warning lamp is extinguished and diagnosis code is cleared at fourth display of diagnosis code after recovery.)

[Electronic Control Unit Connection Diagram]

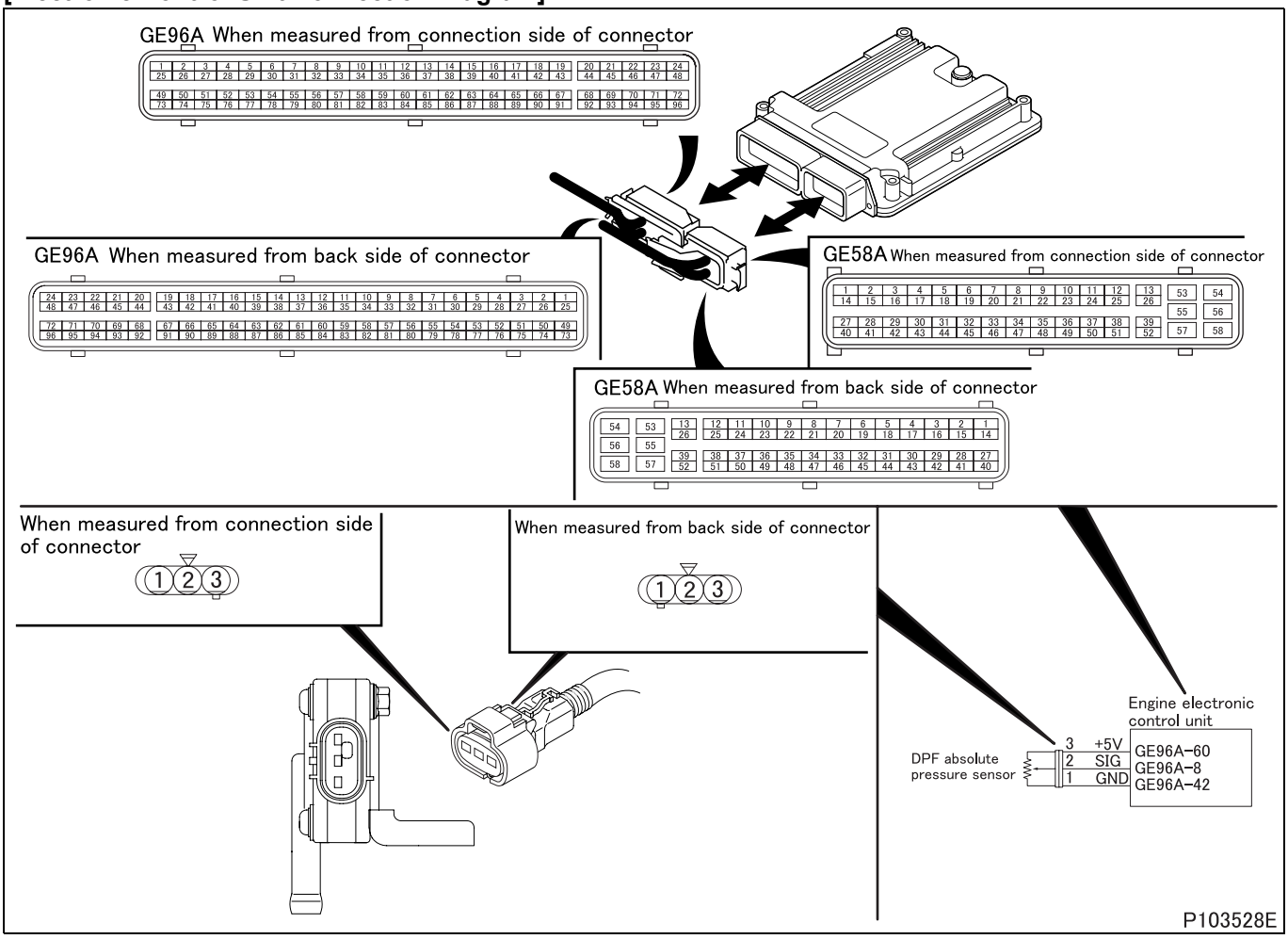

[Parts Identification and Location]

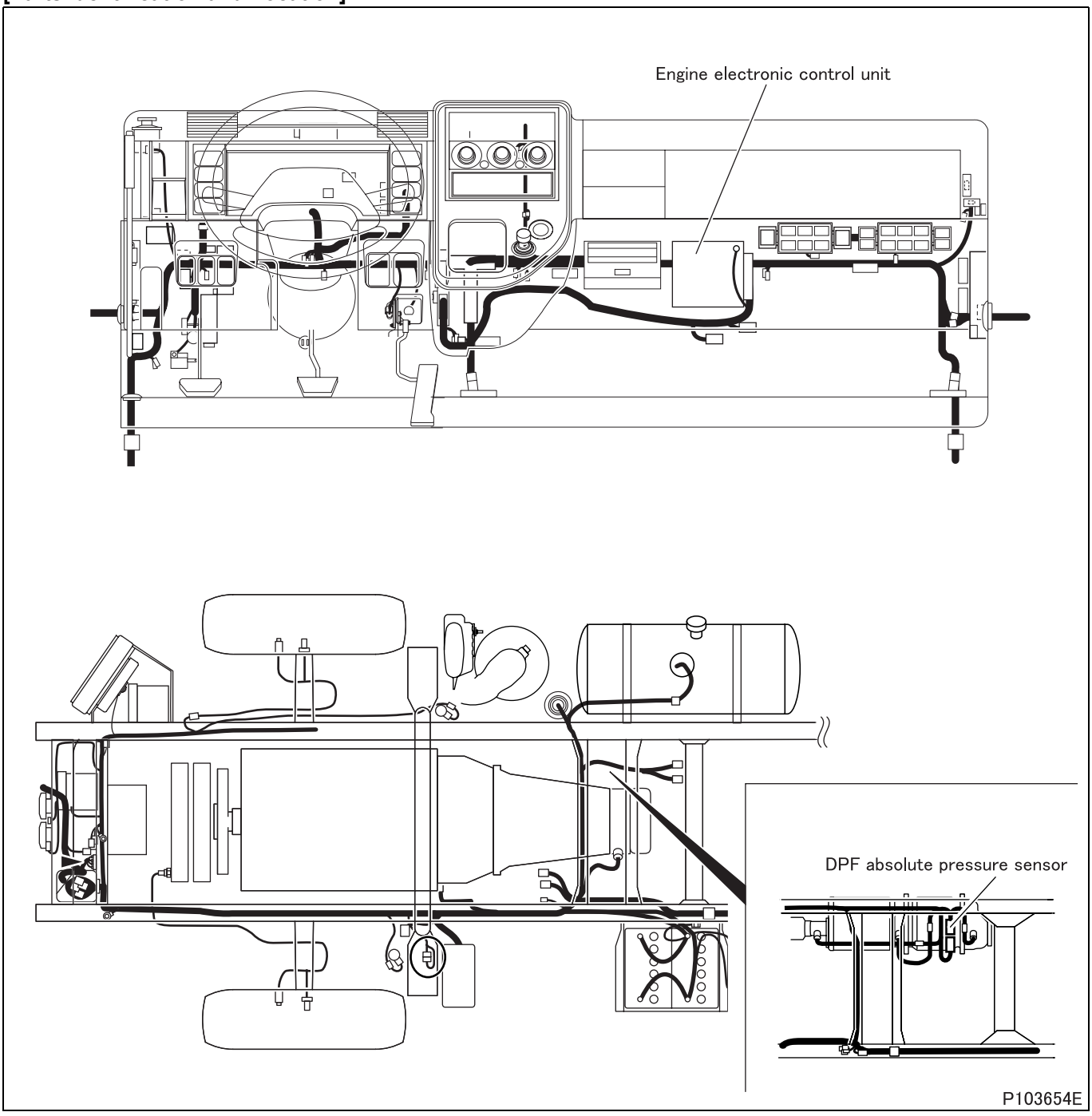

[Fault diagnosis]

- Perform checks in the sequence of the following steps.

Step 1	Inspection items		Inspection by control data
	Maintenance item		Check if following diagnosis codes occur simultaneously. • P2453 “DPF Diff SNSR (Plausi) & MFF” • P2454 “DPF Diff SNSR (Low) & MFF” • P2455 “DPF Diff SNSR (High) & MFF”
	Inspection condition		Starter switch: ON Engine: stopped
	Requirements		Codes occur.
	Inspection result (Is the judging standard satisfied?)	YES	Inspect diagnosis code that is occurring.
		NO	Go to step 2.

Step 2	Inspection items		Inspection by control data
	Maintenance item		Measure item No. 23 “Exhaust gas pressure” of Service Data.
	Inspection condition		–
	Requirements		0 kPa {0 psi, 0 kgf/cm^2}
	Inspection result (Is the judging standard satisfied?)	YES	Go to transient fault (See Gr00.).
		NO	Go to step 3.

Step 3	Inspection items		Inspection by electronic control unit connector (signal)
	Maintenance item		Measure value of voltage between connector (GE96A) terminal No. 8 (+) and 42 (–).
	Inspection condition		• Starter switch: ON • Engine: stopped • Measure from back side of connector of harness with each device connected to harness.
	Requirements		1.875 to 4.5 V
	Inspection result (Is the judging standard satisfied?)	YES	Go to step 6.
		NO	Go to step 4.

Step 4	Inspection items		Inspection by electronic control unit connector (power supply)
	Maintenance item		Measure value of voltage between connector (GE96A) terminal No. 60 (+) and 42 (–).
	Inspection condition		• Starter switch: ON • Engine: stopped • Measure from back side of connector of harness with each device connected to harness.
	Requirements		5 V
	Inspection result (Is the judging standard satisfied?)	YES	Go to step 5.
		NO	Go to step 6.

Step 5	Inspection items		Inspection by electronic control unit connector (ground)
	Maintenance item		Measure value of voltage between connector (GE96A) terminal No. 42 (+) and (GE58A) terminal No. 53 (–).
	Inspection condition		• Starter switch: ON • Engine: stopped • Measure from back side of connector of harness with each device connected to harness.
	Requirements		0 V
	Inspection result (Is the judging standard satisfied?)	YES	Go to step 7.
		NO	Go to step 6.

Step 6	Inspection items		Inspection of electronic control unit connector
	Maintenance item		Inspection of connector
	Inspection condition		–
	Requirements		• Connector is properly connected. • No trace of water entry is found. • No corrosion is found in terminal. • Connection to terminal is appropriate.
	Inspection result (Is the judging standard satisfied?)	YES	Go to step 13.
		NO	Modify connector.

Step 7	Inspection items		Inspection of sensor connector
	Maintenance item		Inspection of connector
	Inspection condition		–
	Requirements		• Connector is properly connected. • No trace of water entry is found. • No corrosion is found in terminal. • Connection to terminal is appropriate.
	Inspection result (Is the judging standard satisfied?)	YES	Go to step 8.
		NO	Modify connector.

Step 8	Inspection items		Inspection of DPF absolute pressure sensor unit
	Maintenance item		Measure value of voltage between terminal No. 2 (+) and 1 (–).
	Inspection condition		• Apply voltage DC 5 V across connector terminals No. 3 (+) and 1 (–). • Gradually increase applied air pressure.
	Requirements		• 41 ± 3.2 kPa {5.9 ± 0.5 psi, 0.43 ± 0.03 kgf/cm^2}: 1.875 V • 99 ± 3.2 kPa {14 ± 0.5 psi, 1.0 ± 0.03 kgf/cm^2}: 4.5 V
	Inspection result (Is the judging standard satisfied?)	YES	Go to step 9.
		NO	Replacement of sensor

<Step 8 inspection diagram>

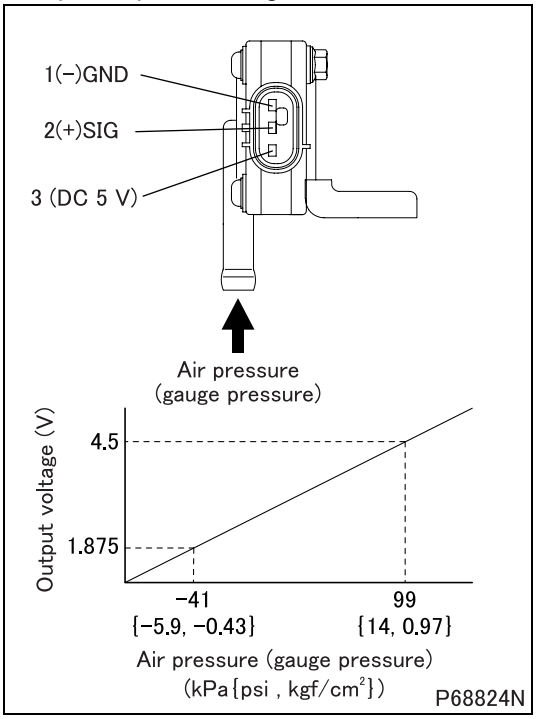

Step 9	Inspection items		Inspection by sensor connector
	Maintenance item		Measure value of voltage between terminal No. 3 (+) and 1 (–).
	Inspection condition		• Starter switch: ON • Engine: stopped • Measure from back side of connector of harness with each device connected to harness.
	Requirements		5 V
	Inspection result (Is the judging standard satisfied?)	YES	Go to step 11.
		NO	Go to step 10.

Step 10	Inspection items		Inspection of harness between electronic control unit and sensor (power supply)
	Maintenance item		Check circuit between electronic control unit connector (GE96A) terminal No. 60 and sensor connector terminal No. 3.
	Inspection condition		Disconnect each device from harness and measure from connection side of harness connector.
	Requirements		There is continuity.
	Inspection result (Is the judging standard satisfied?)	YES	Go to step 13.
		NO	Modify harness.

Step 11	Inspection items		Inspection of harness between electronic control unit and sensor (ground)
	Maintenance item		Check circuit between electronic control unit connector (GE96A) terminal No. 42 and sensor connector terminal No. 1.
	Inspection condition		Disconnect each device from harness and measure from connection side of harness connector.
	Requirements		There is continuity.
	Inspection result (Is the judging standard satisfied?)	YES	Go to step 12.
		NO	Modify harness.

Step 12	Inspection items		Inspection of harness between electronic control unit and sensor (signal)
	Maintenance item		Check circuit between electronic control unit connector (GE96A) terminal No. 8 and sensor connector terminal No. 2.
	Inspection condition		Disconnect each device from harness and measure from connection side of harness connector.
	Requirements		There is continuity.
	Inspection result (Is the judging standard satisfied?)	YES	Go to step 13.
		NO	Modify harness.

Step 13	Inspection items		Inspection by control data
	Maintenance item		Measure item No. 23 “Exhaust gas pressure” of Service Data.
	Inspection condition		–
	Requirements		0 kPa {0 psi, 0 kgf/cm^2}
	Inspection result (Is the judging standard satisfied?)	YES	Go to transient fault (See Gr00.).
		NO	Replacement of electronic control unit

[Fault code]
Diagnosis code: P0473/Flash code: 98
[Monitor]
Failure of DPF absolute pressure sensor
[Fault (outline)]
High signal range check
[Diagnosis check]
- Output voltage of DPF absolute pressure sensor is monitored.

[Code generation condition]
- Output voltage of DPF absolute pressure sensor remains over 4.8 V for 1 second. (sensor pressure: 216 kPa {31 psi, 2.2 kgf/cm^2} or more)
  (Warning lamp is lit and diagnosis code is displayed on third establishment of code generation conditions.)

[Diagnosis check timing]
- Fault diagnosis is continuously performed during the driving cycle.

[Diagnostic requirement]
–

[Control effected by electronic control unit during fault]
- Pressure before ceramic diesel particulate filter is fixed at backup value.
- Particulate matter deposit computation is stopped.
- Related fault check is stopped.

[Probable cause of trouble]
- Open-circuit or short-circuit of harness between electronic control unit and sensor
- Malfunction of each connector
- Malfunction of sensor
- Malfunction of electronic control unit

[Recoverability]
- Recovered if signal becomes normal with starter switch in ON position.
  (Warning lamp is extinguished and diagnosis code is cleared at fourth display of diagnosis code after recovery.)

[Electronic Control Unit Connection Diagram]

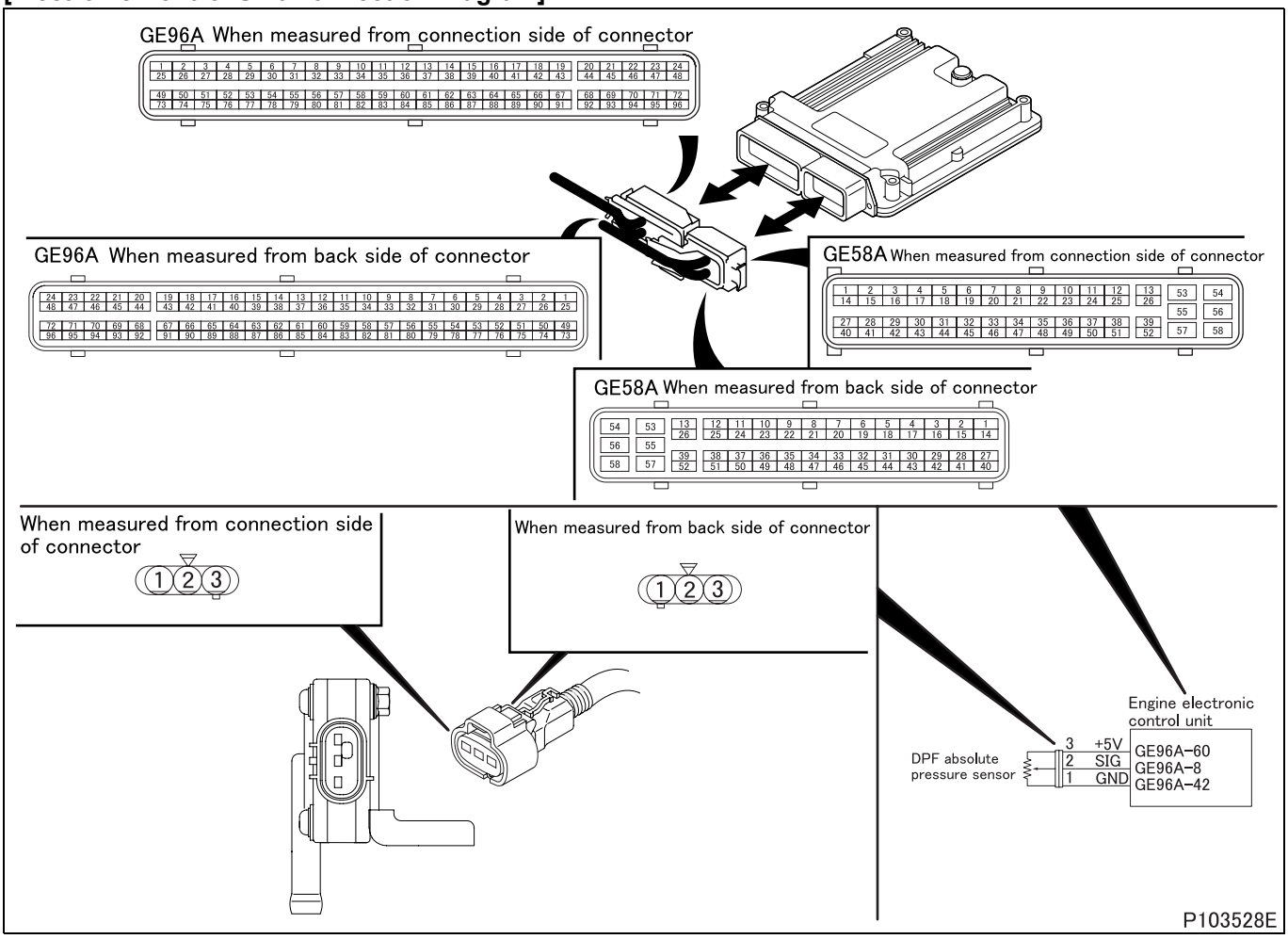

[Parts Identification and Location]

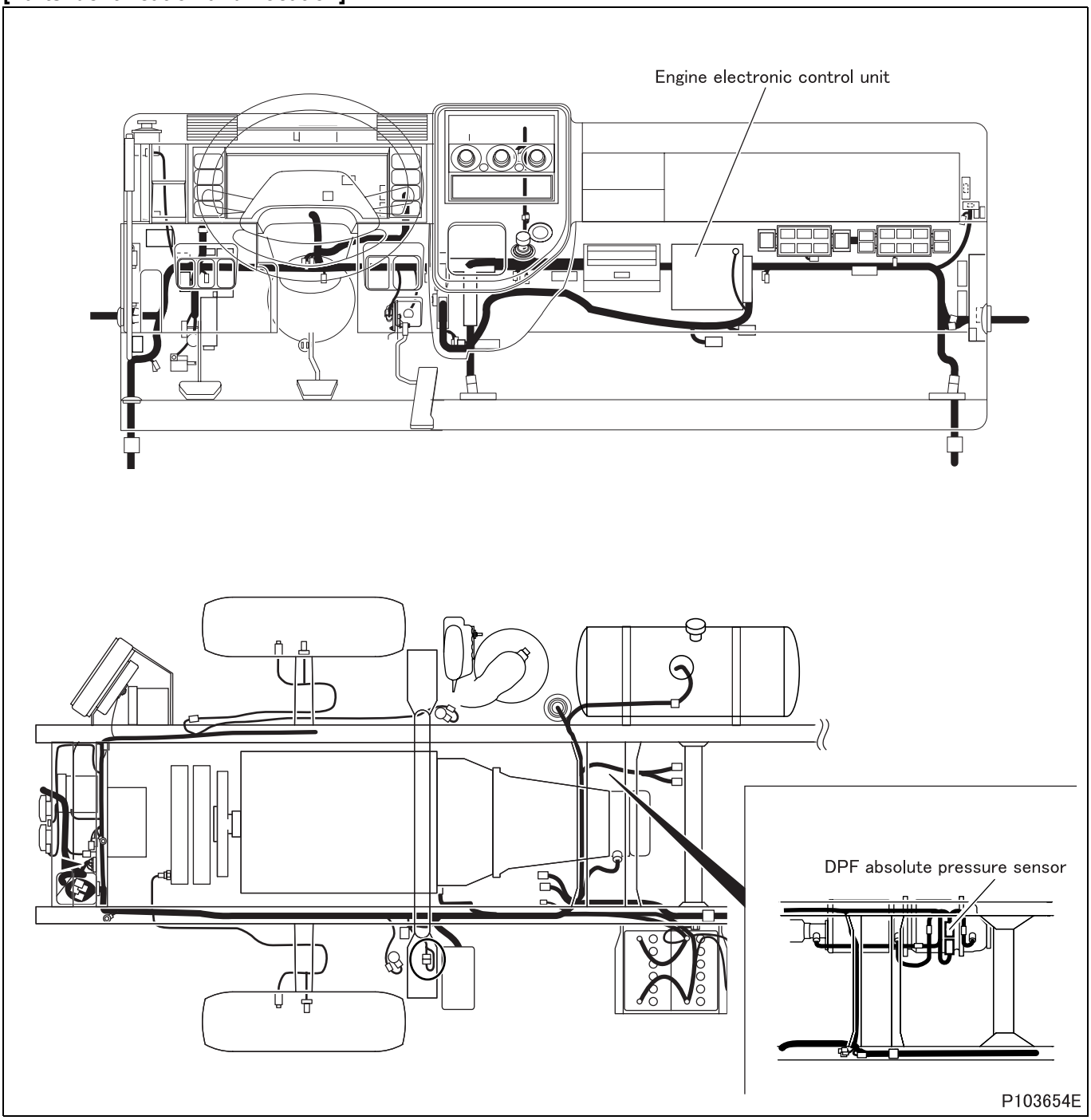

[Fault diagnosis]

- Perform checks in the sequence of the following steps.

Step 1	Inspection items		Inspection by control data
	Maintenance item		Check if following diagnosis codes occur simultaneously. • P2453 “DPF Diff SNSR (Plausi) & MFF” • P2454 “DPF Diff SNSR (Low) & MFF” • P2455 “DPF Diff SNSR (High) & MFF”
	Inspection condition		Starter switch: ON Engine: stopped
	Requirements		Codes occur.
	Inspection result (Is the judging standard satisfied?)	YES	Inspect diagnosis code that is occurring.
		NO	Go to step 2.

Step 2	Inspection items		Inspection by control data
	Maintenance item		Measure item No. 23 “Exhaust gas pressure” of Service Data.
	Inspection condition		–
	Requirements		0 kPa {0 psi, 0 kgf/cm^2}
	Inspection result (Is the judging standard satisfied?)	YES	Go to transient fault (See Gr00.).
		NO	Go to step 3.

Step 3	Inspection items		Inspection by electronic control unit connector (signal)
	Maintenance item		Measure value of voltage between connector (GE96A) terminal No. 8 (+) and 42 (–).
	Inspection condition		• Starter switch: ON • Engine: stopped • Measure from back side of connector of harness with each device connected to harness.
	Requirements		1.875 to 4.5 V
	Inspection result (Is the judging standard satisfied?)	YES	Go to step 6.
		NO	Go to step 4.

Step 4	Inspection items		Inspection by electronic control unit connector (power supply)
	Maintenance item		Measure value of voltage between connector (GE96A) terminal No. 60 (+) and 42 (–).
	Inspection condition		• Starter switch: ON • Engine: stopped • Measure from back side of connector of harness with each device connected to harness.
	Requirements		5 V
	Inspection result (Is the judging standard satisfied?)	YES	Go to step 5.
		NO	Go to step 6.

Step 5	Inspection items		Inspection by electronic control unit connector (ground)
	Maintenance item		Measure value of voltage between connector (GE96A) terminal No. 42 (+) and (GE58A) terminal No. 53 (–).
	Inspection condition		• Starter switch: ON • Engine: stopped • Measure from back side of connector of harness with each device connected to harness.
	Requirements		0 V
	Inspection result (Is the judging standard satisfied?)	YES	Go to step 7.
		NO	Go to step 6.

Step 6	Inspection items		Inspection of electronic control unit connector
	Maintenance item		Inspection of connector
	Inspection condition		–
	Requirements		• Connector is properly connected. • No trace of water entry is found. • No corrosion is found in terminal. • Connection to terminal is appropriate.
	Inspection result (Is the judging standard satisfied?)	YES	Go to step 13.
		NO	Modify connector.

Step 7	Inspection items		Inspection of sensor connector
	Maintenance item		Inspection of connector
	Inspection condition		–
	Requirements		• Connector is properly connected. • No trace of water entry is found. • No corrosion is found in terminal. • Connection to terminal is appropriate.
	Inspection result (Is the judging standard satisfied?)	YES	Go to step 8.
		NO	Modify connector.

Step 8	Inspection items		Inspection of DPF absolute pressure sensor unit
	Maintenance item		Measure value of voltage between terminal No. 2 (+) and 1 (–).
	Inspection condition		• Apply voltage DC 5 V across connector terminals No. 3 (+) and 1 (–). • Gradually increase applied air pressure.
	Requirements		• 41 ± 3.2 kPa {5.9 ± 0.5 psi, 0.43 ± 0.03 kgf/cm^2}: 1.875 V • 99 ± 3.2 kPa {14 ± 0.5 psi, 1.0 ± 0.03 kgf/cm^2}: 4.5 V
	Inspection result (Is the judging standard satisfied?)	YES	Go to step 9.
		NO	Replacement of sensor

<Step 8 inspection diagram>

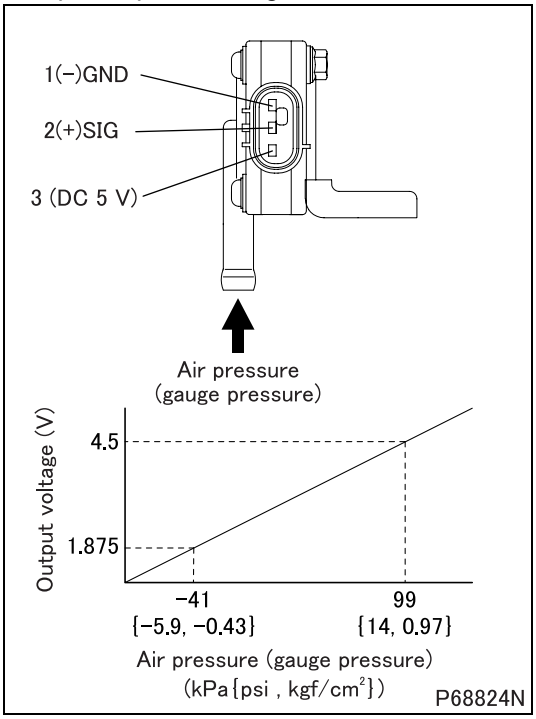

Step 9	Inspection items		Inspection by sensor connector
	Maintenance item		Measure value of voltage between terminal No. 3 (+) and 1 (–).
	Inspection condition		• Starter switch: ON • Engine: stopped • Measure from back side of connector of harness with each device connected to harness.
	Requirements		5 V
	Inspection result (Is the judging standard satisfied?)	YES	Go to step 11.
		NO	Go to step 10.

Step 10	Inspection items		Inspection of harness between electronic control unit and sensor (power supply)
	Maintenance item		Check circuit between electronic control unit connector (GE96A) terminal No. 60 and sensor connector terminal No. 3.
	Inspection condition		Disconnect each device from harness and measure from connection side of harness connector.
	Requirements		There is continuity.
	Inspection result (Is the judging standard satisfied?)	YES	Go to step 13.
		NO	Modify harness.

Step 11	Inspection items		Inspection of harness between electronic control unit and sensor (ground)
	Maintenance item		Check circuit between electronic control unit connector (GE96A) terminal No. 42 and sensor connector terminal No. 1.
	Inspection condition		Disconnect each device from harness and measure from connection side of harness connector.
	Requirements		There is continuity.
	Inspection result (Is the judging standard satisfied?)	YES	Go to step 12.
		NO	Modify harness.

Step 12	Inspection items		Inspection of harness between electronic control unit and sensor (signal)
	Maintenance item		Check circuit between electronic control unit connector (GE96A) terminal No. 8 and sensor connector terminal No. 2.
	Inspection condition		Disconnect each device from harness and measure from connection side of harness connector.
	Requirements		There is continuity.
	Inspection result (Is the judging standard satisfied?)	YES	Go to step 13.
		NO	Modify harness.

Step 13	Inspection items		Inspection by control data
	Maintenance item		Measure item No. 23 “Exhaust gas pressure” of Service Data.
	Inspection condition		–
	Requirements		0 kPa {0 psi, 0 kgf/cm^2}
	Inspection result (Is the judging standard satisfied?)	YES	Go to transient fault (See Gr00.).
		NO	Replacement of electronic control unit

[Fault code]
Diagnosis code: P0476/Flash code: 93
[Monitor]
Failure of exhaust brake
[Fault (outline)]
Valve stuck open/shut
[Diagnosis check]
- Air flow sensor output (intake air flow rate) is monitored for valve being stuck in that state when commanded to open or close by engine electronic control unit.

[Code generation condition]
Diagnosis code is generated under either of the following conditions. (Warning lamp is lit and diagnosis code is displayed on third establishment of code generation conditions.)
<When valve is commanded to open>
- Intake air flow rate remains less than specified for 5 seconds.

<When valve is commanded to close>
- Intake air flow rate remains more than specified for 5 seconds.

[Diagnosis check timing]
- Fault diagnosis is performed only once during the driving cycle.

[Diagnostic requirement]
- Engine operating mode: normal (engine in operation)
- Engine speed: 1250 to 2750 rpm
- Accelerator pedal position: less than 2%
- Water temperature: 64 to 100°C {147 to 212°F}
- Intake air temperature: –7 to 60°C {19 to 140°F}
- Boost pressure: more than 750 rpm
- Exhaust gas recirculation valve position: 0 to 2 mm {0 to 0.079 in.}
- Air flow sensor: in order
- Accelerator pedal position sensor: in order
- Exhaust gas recirculation flow rate and exhaust gas recirculation valve operation: in order
- Exhaust gas recirculation valve position sensor: in order
- Battery voltage: in order
- Boost pressure sensor: in order
- Water temperature sensor: in order
- Exhaust shutter 2-way magnetic valve: in order
- Intake air temperature sensor: in order
- Sensor 5 V power supply: in order

[Control effected by electronic control unit during fault]
- Diesel particulate filter regeneration is stopped.
- Related fault check is stopped.

[Probable cause of trouble]
- Short-circuit of harness between electronic control unit and exhaust shutter 2-way magnetic valve
- Malfunction of each connector
- Malfunction of exhaust shutter 2-way magnetic valve
- Malfunction of electronic control unit
- Malfunction of exhaust shutter unit

[Recoverability]
- Recovered if signal becomes normal when starter switch is turned OFF to ON (power supply resumed to electronic control unit).
  (Warning lamp is extinguished and diagnosis code is cleared at fourth display of diagnosis code after recovery.)

[Electronic Control Unit Connection Diagram]

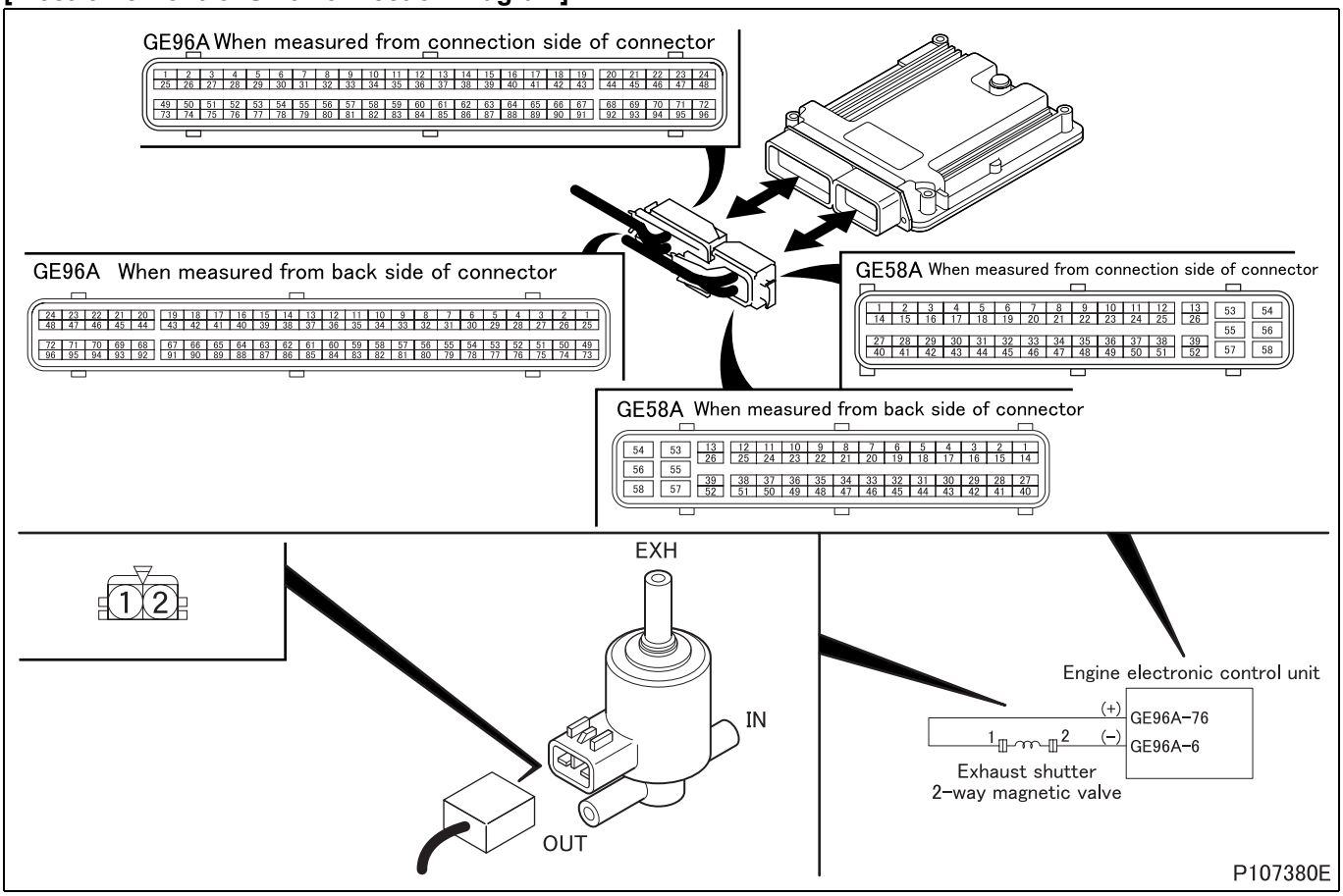

[Parts Identification and Location]

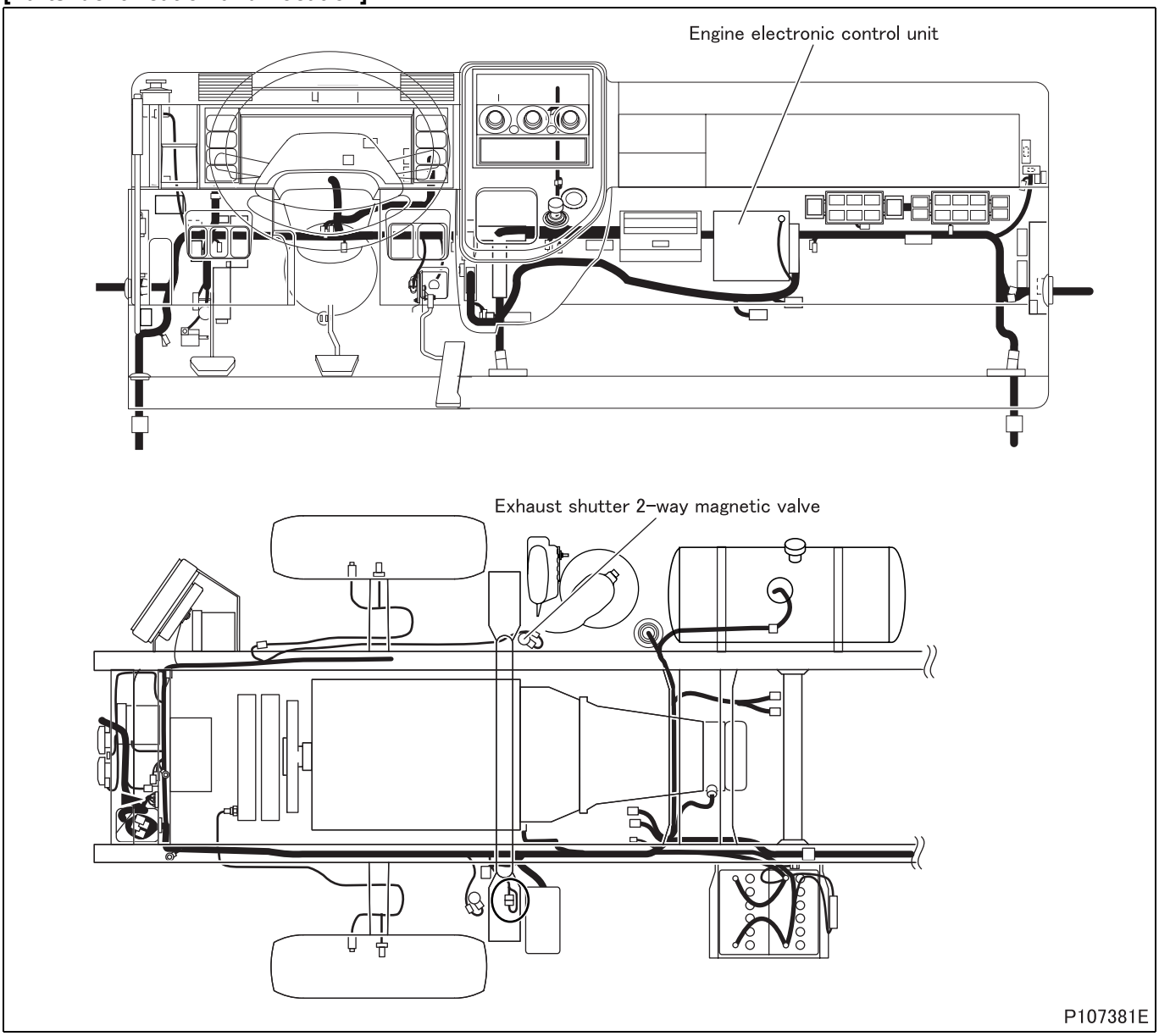

[Fault diagnosis]

- Perform checks in the sequence of the following steps.

Step 1	Inspection items		Inspection by electronic control unit connector
	Maintenance item		Measure value of resistance between connector (GE96A) terminal No. 6 and 76.
	Inspection condition		Disconnect electronic control unit from harness and measure from connection side of harness connector.
	Requirements		48 Ω or more
	Inspection result (Is the judging standard satisfied?)	YES	Go to step 8.
		NO	Go to step 2.

Step 2	Inspection items		Inspection of electronic control unit connector
	Maintenance item		Inspection of connector
	Inspection condition		–
	Requirements		• Connector is properly connected. • No trace of water entry is found. • No corrosion is found in terminal. • Connection to terminal is appropriate.
	Inspection result (Is the judging standard satisfied?)	YES	Go to step 3.
		NO	Modify connector.

Step 3	Inspection items		Inspection of exhaust shutter 2-way magnetic valve connector
	Maintenance item		Inspection of connector
	Inspection condition		–
	Requirements		• Connector is properly connected. • No trace of water entry is found. • No corrosion is found in terminal. • Connection to terminal is appropriate.
	Inspection result (Is the judging standard satisfied?)	YES	Go to step 4.
		NO	Modify connector.

Step 4	Inspection items		Inspection of exhaust shutter 2-way magnetic valve unit
	Maintenance item		Measure minimum operating voltage when 2-way magnetic valve operates (judge by operation sound).
	Inspection condition		Gradually increase from zero the voltage applied to terminals No. 1 (+) and 2 (–).
	Requirements		11 V or less
	Inspection result (Is the judging standard satisfied?)	YES	Go to step 5.
		NO	Replacement of 2-way magnetic valve

<Step 4 inspection diagram>

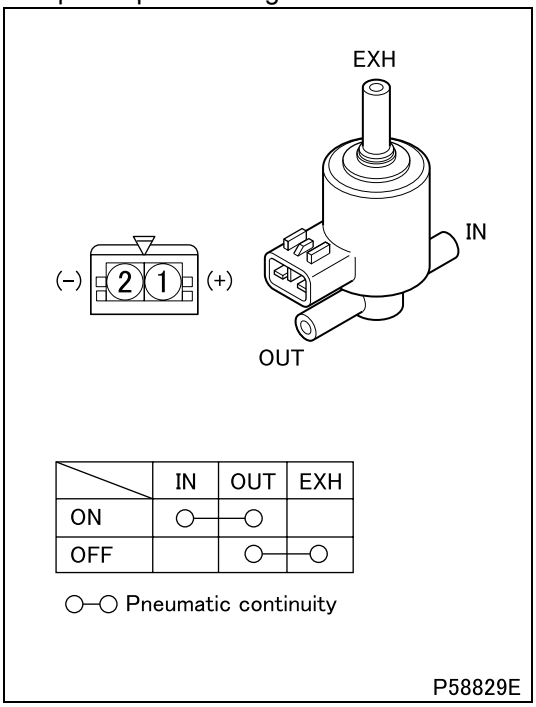

Step 5	Inspection items		Inspection of harness between exhaust shutter 2-way magnetic valve and electronic control unit (power supply)
	Maintenance item		Check circuit between exhaust shutter 2-way magnetic valve connector terminal No. 1 and electronic control unit connector (GE96A) terminal No. 76.
	Inspection condition		Disconnect electronic control unit from harness and measure from connection side of harness connector.
	Requirements		There is continuity.
	Inspection result (Is the judging standard satisfied?)	YES	Go to step 6.
		NO	Modify harness.

Step 6	Inspection items		Inspection of harness between exhaust shutter 2-way magnetic valve and electronic control unit (power supply)
	Maintenance item		Check circuit between exhaust shutter 2-way magnetic valve connector terminal No. 1 and chassis ground.
	Inspection condition		Disconnect electronic control unit from harness and measure from connection side of harness connector.
	Requirements		There is continuity.
	Inspection result (Is the judging standard satisfied?)	YES	Go to step 7.
		NO	Modify harness.

Step 7	Inspection items		Inspection of harness between exhaust shutter 2-way magnetic valve and electronic control unit (ground)
	Maintenance item		Check circuit between exhaust shutter 2-way magnetic valve connector terminal No. 2 and electronic control unit connector (GE96A) terminal No. 6.
	Inspection condition		Disconnect electronic control unit from harness and measure from connection side of harness connector.
	Requirements		There is continuity.
	Inspection result (Is the judging standard satisfied?)	YES	Go to step 8.
		NO	Modify harness.

Step 8	Inspection items		Inspection by control data
	Maintenance item		Perform actuator test item No. AA “Auxiliary Brake M/V 1”
	Inspection condition		Starter switch: ON
	Requirements		2-way magnetic valve operation sound is noted.
	Inspection result (Is the judging standard satisfied?)	YES	Go to transient fault (See Gr00.).
		NO	Replacement of electronic control unit

[Fault code]
Diagnosis code: P0489/Flash code: 67
[Monitor]
Failure of exhaust gas recirculation system
[Fault (outline)]
Power out of range
[Diagnosis check]
- Exhaust gas recirculation electronic drive unit monitors power supply voltage of electronic drive unit and sends fault information to engine electronic control unit through controller area network communication.

[Code generation condition]
- Voltage of exhaust gas recirculation electronic drive unit remains below 7 V for 13 seconds.
  (Warning lamp is lit and diagnosis code is displayed on third establishment of code generation conditions.)

[Diagnosis check timing]
- Fault diagnosis is continuously performed during the driving cycle.

[Diagnostic requirement]
- Controller area network communication in order

[Control effected by electronic control unit during fault]
- Exhaust gas recirculation control is stopped.
- Throttle controls disabled
- Related fault check is stopped.

[Probable cause of trouble]
- Open-circuit or short-circuit of harness between electronic drive unit and battery
- Malfunction of each connector
- Malfunction of battery
- Malfunction of electronic drive unit relay
- Malfunction of electronic drive unit

[Recoverability]
- Recovered if signal becomes normal with starter switch in ON position.
  (Warning lamp is extinguished and diagnosis code is cleared at fourth display of diagnosis code after recovery.)

[Electronic Control Unit Connection Diagram]

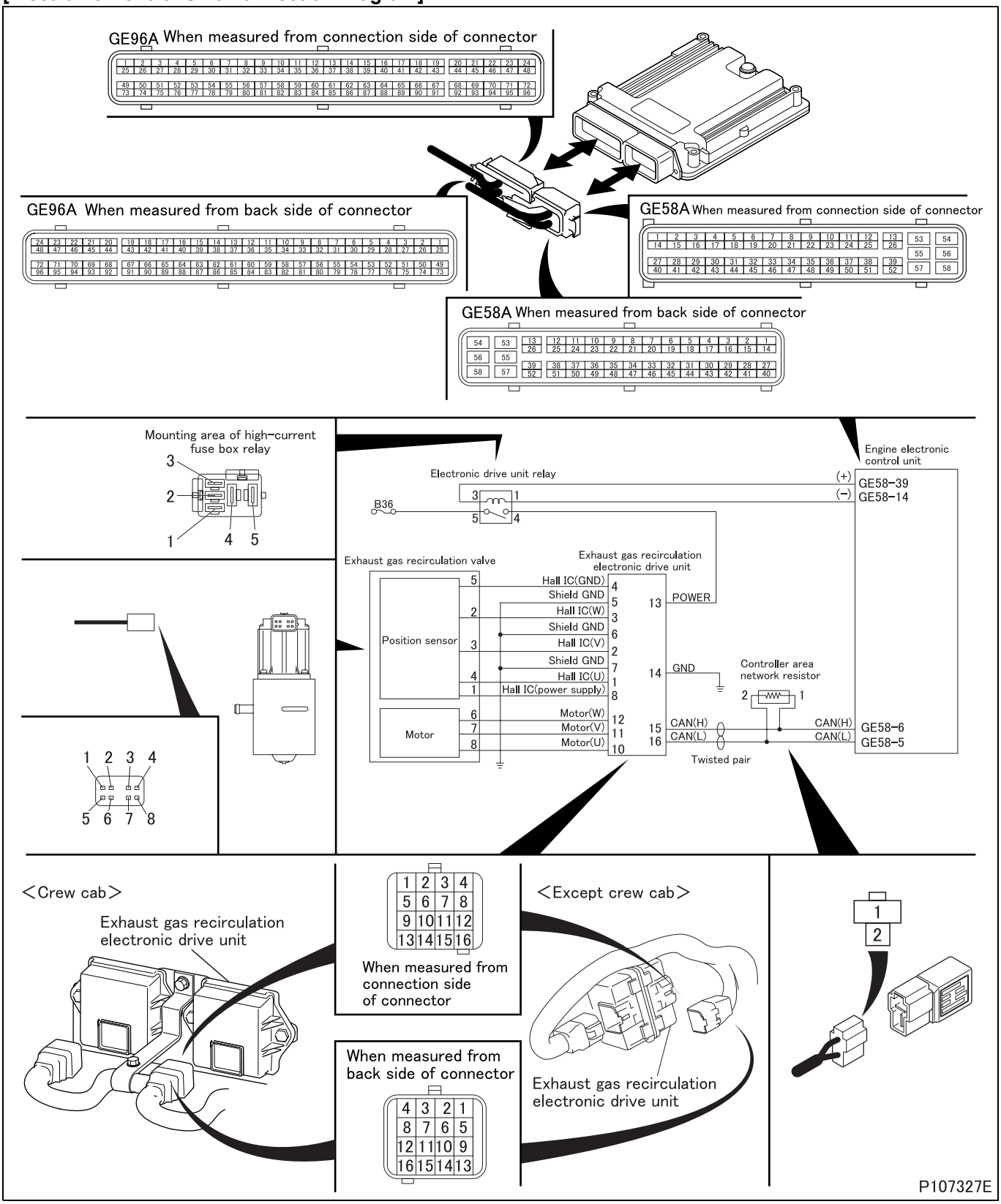

[Parts Identification and Location]

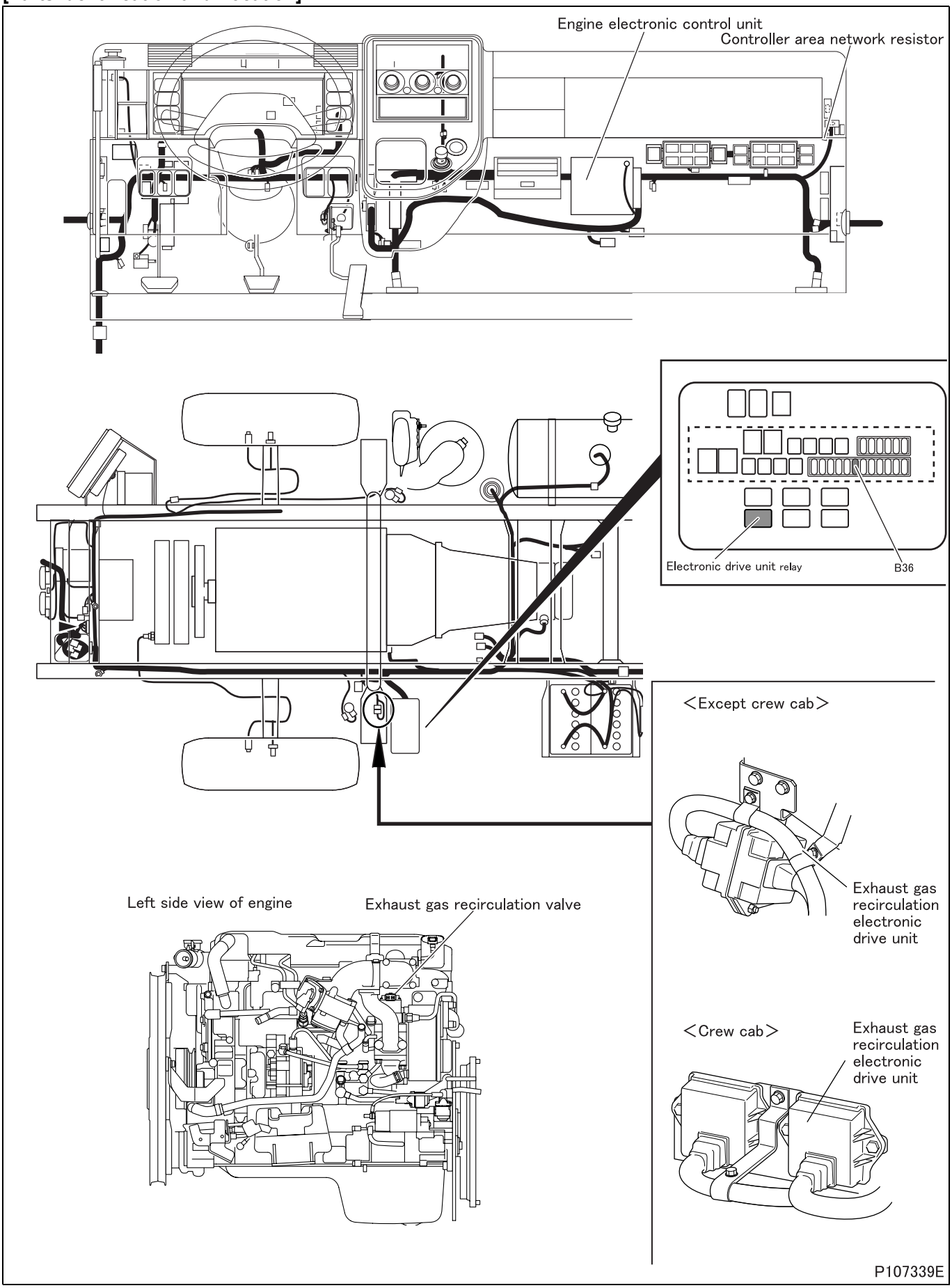

[Fault diagnosis]

- Perform checks in the sequence of the following steps.

Step 1	Inspection items		Inspection by control data
	Maintenance item		Check if following diagnosis codes occur simultaneously. • P0685 “EDU Relay (Open)” • P0686 “EDU Relay (Low)” • P0687 “EDU Relay (High)” • P0688 “EDU Relay (Over Load)”
	Inspection condition		• Starter switch: ON • Engine: stopped
	Requirements		Codes occur.
	Inspection result (Is the judging standard satisfied?)	YES	Inspect diagnosis code that is occurring.
		NO	Go to step 2.

Step 2	Inspection items		Inspection of electronic drive unit connector
	Maintenance item		Inspection of connector
	Inspection condition		–
	Requirements		• Connector is properly connected. • No trace of water entry is found. • No corrosion is found in terminal. • Connection to terminal is appropriate.
	Inspection result (Is the judging standard satisfied?)	YES	Go to step 3.
		NO	Modify connector.

Step 3	Inspection items		Inspection of electronic drive unit connector (power supply)
	Maintenance item		Measure value of voltage between connector terminal No. 13 (+) and 14 (–).
	Inspection condition		• Starter switch: ON • Engine: stopped • Remove connector and measure from harness side. • Perform actuator test item No. AF “EDU Relay”
	Requirements		Same as battery voltage.
	Inspection result (Is the judging standard satisfied?)	YES	Go to transient fault (See Gr00.).
		NO	Go to step 4.

Step 4	Inspection items		Inspection of relay connector
	Maintenance item		Inspection of connector
	Inspection condition		–
	Requirements		• Connector is properly connected. • No trace of water entry is found. • No corrosion is found in terminal. • Connection to terminal is appropriate.
	Inspection result (Is the judging standard satisfied?)	YES	Go to step 5.
		NO	Modify connector.

Step 5	Inspection items		Inspection of harness between fuse and relay
	Maintenance item		Check circuit between fuse No. B36 and relay connector terminal No. 5.
	Inspection condition		Disconnect each device from harness and measure from connection side of harness connector.
	Requirements		There is continuity.
	Inspection result (Is the judging standard satisfied?)	YES	Go to step 6.
		NO	Modify harness.

Step 6	Inspection items		Inspection of harness between relay and electronic drive unit
	Maintenance item		Check circuit between relay connector terminal No. 4 and electronic drive unit connector terminal No. 13.
	Inspection condition		Disconnect each device from harness and measure from connection side of harness connector.
	Requirements		There is continuity.
	Inspection result (Is the judging standard satisfied?)	YES	After replacement of electronic drive unit relay, go to step 7
		NO	Modify harness.

Step 7	Inspection items		Inspection of harness between electronic drive unit and ground
	Maintenance item		Check circuit between electronic drive unit connector terminal No. 14 and chassis ground.
	Inspection condition		Disconnect each device from harness and measure from connection side of harness connector.
	Requirements		There is continuity.
	Inspection result (Is the judging standard satisfied?)	YES	Replacement of electronic drive unit
		NO	Modify harness.

[Fault code]
Diagnosis code: P0490/Flash code: 67
[Monitor]
Failure of exhaust gas recirculation system
[Fault (outline)]
Power out of range
[Diagnosis check]
- Exhaust gas recirculation electronic drive unit monitors power supply voltage of electronic control drive unit and sends fault information to engine electronic control unit through controller area network communication.

[Code generation condition]
- Voltage of exhaust gas recirculation electronic drive unit remains over 19 V for 5 seconds.
  (Warning lamp is lit and diagnosis code is displayed on third establishment of code generation conditions.)

[Diagnosis check timing]
- Fault diagnosis is continuously performed during the driving cycle.

[Diagnostic requirement]
- Controller area network communication in order

[Control effected by electronic control unit during fault]
- Exhaust gas recirculation control is stopped.
- Throttle controls disabled
- Related fault check is stopped.

[Probable cause of trouble]
- Open-circuit or short-circuit of harness between electronic drive unit and battery
- Malfunction of each connector
- Malfunction of battery
- Malfunction of electronic drive unit relay
- Malfunction of electronic drive unit

[Recoverability]
- Recovered if signal becomes normal with starter switch in ON position.
  (Warning lamp is extinguished and diagnosis code is cleared at fourth display of diagnosis code after recovery.)

[Electronic Control Unit Connection Diagram]

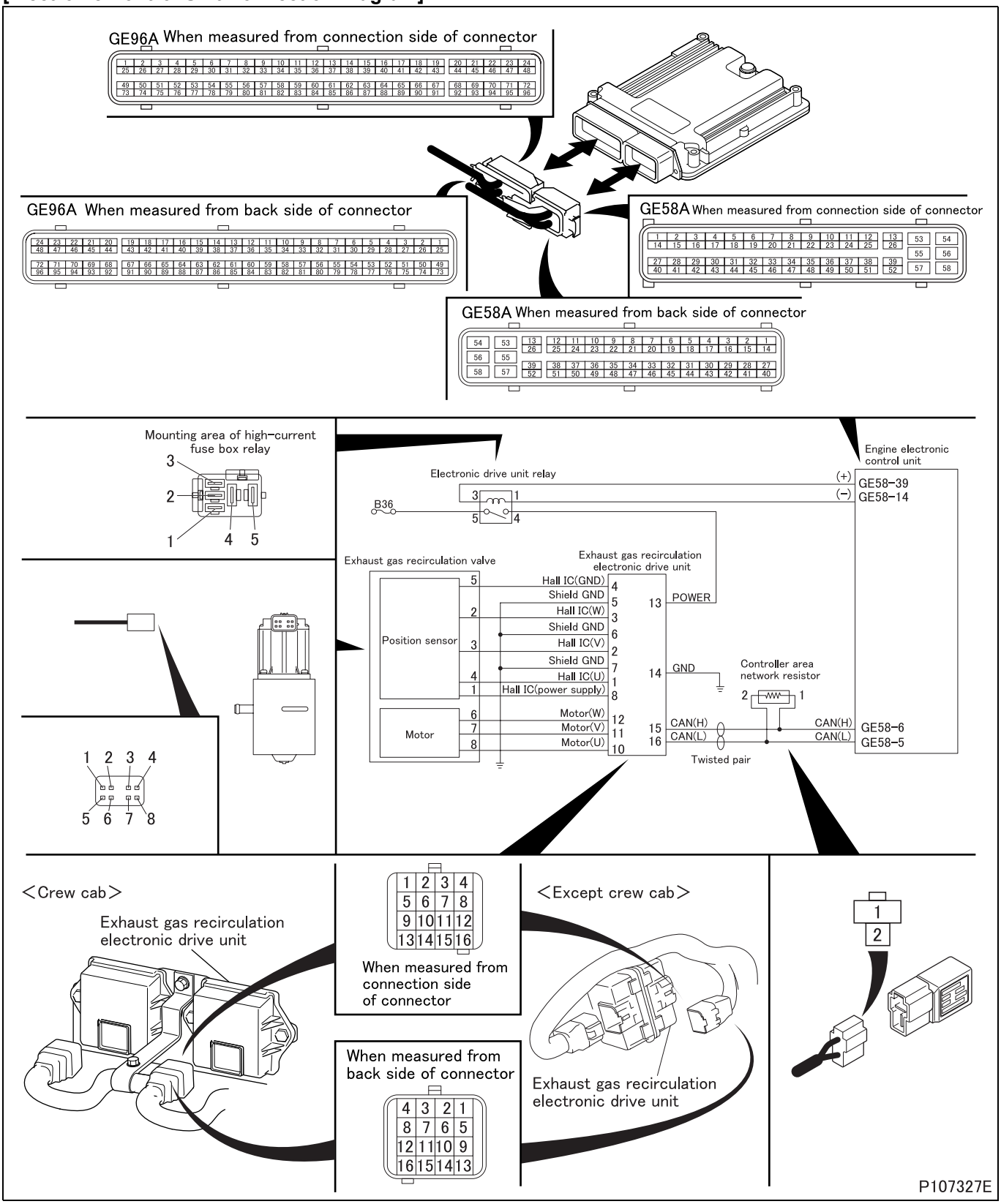

[Parts Identification and Location]

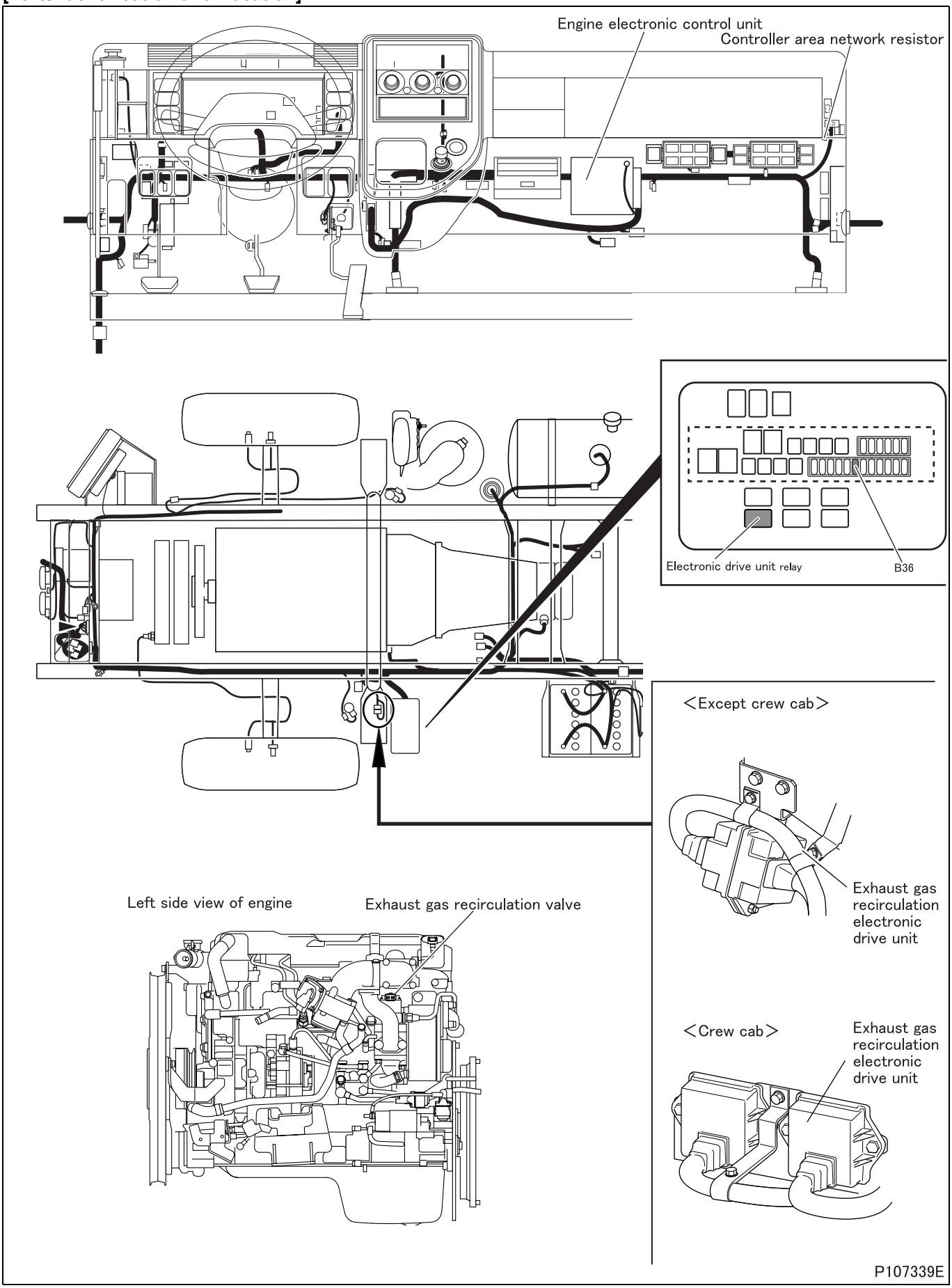

[Fault diagnosis]

- Perform checks in the sequence of the following steps.

Step 1	Inspection items		Inspection by control data
	Maintenance item		Check if following diagnosis codes occur simultaneously. • P0685 “EDU Relay (Open)” • P0686 “EDU Relay (Low)” • P0687 “EDU Relay (High)” • P0688 “EDU Relay (Over Load)”
	Inspection condition		• Starter switch: ON • Engine: stopped
	Requirements		Codes occur.
	Inspection result (Is the judging standard satisfied?)	YES	Inspect diagnosis code that is occurring.
		NO	Go to step 2.

Step 2	Inspection items		Inspection of electronic drive unit connector
	Maintenance item		Inspection of connector
	Inspection condition		–
	Requirements		• Connector is properly connected. • No trace of water entry is found. • No corrosion is found in terminal. • Connection to terminal is appropriate.
	Inspection result (Is the judging standard satisfied?)	YES	Go to step 3.
		NO	Modify connector.

Step 3	Inspection items		Inspection of electronic drive unit connector (power supply)
	Maintenance item		Measure value of voltage between connector terminal No. 13 (+) and 14 (–).
	Inspection condition		• Starter switch: ON • Engine: stopped • Remove connector and measure from harness side. • Perform actuator test item No. AF “EDU Relay”
	Requirements		Same as battery voltage.
	Inspection result (Is the judging standard satisfied?)	YES	Go to transient fault (See Gr00.).
		NO	Go to step 4.

Step 4	Inspection items		Inspection of relay connector
	Maintenance item		Inspection of connector
	Inspection condition		–
	Requirements		• Connector is properly connected. • No trace of water entry is found. • No corrosion is found in terminal. • Connection to terminal is appropriate.
	Inspection result (Is the judging standard satisfied?)	YES	Go to step 5.
		NO	Modify connector.

Step 5	Inspection items		Inspection of harness between fuse and relay
	Maintenance item		Check circuit between fuse No. B36 and relay connector terminal No. 5.
	Inspection condition		Disconnect each device from harness and measure from connection side of harness connector.
	Requirements		There is continuity.
	Inspection result (Is the judging standard satisfied?)	YES	Go to step 6.
		NO	Modify harness.

Step 6	Inspection items		Inspection of harness between relay and electronic drive unit
	Maintenance item		Check circuit between relay connector terminal No. 4 and electronic drive unit connector terminal No. 13.
	Inspection condition		Disconnect each device from harness and measure from connection side of harness connector.
	Requirements		There is continuity.
	Inspection result (Is the judging standard satisfied?)	YES	After replacement of electronic drive unit relay, go to step 7.
		NO	Modify harness.

Step 7	Inspection items		Inspection of harness between electronic drive unit and ground
	Maintenance item		Check circuit between electronic drive unit connector terminal No. 14 and chassis ground.
	Inspection condition		Disconnect each device from harness and measure from connection side of harness connector.
	Requirements		There is continuity.
	Inspection result (Is the judging standard satisfied?)	YES	Replacement of electronic drive unit
		NO	Modify harness.

[Fault code]
Diagnosis code: P0500/Flash code: 25
[Monitor]
Failure of vehicle speed sensor
[Fault (outline)]
Signal
[Diagnosis check]
- Vehicle speed sensor output signal is monitored. (no pulse)

[Code generation condition]
Diagnosis code is generated under either of the following conditions.
<Condition (1)>
- Error in vehicle speed processing function in engine electronic control unit occurs and remains for 0.1 second. (Warning lamp (red) is lit and diagnosis code is displayed on third establishment of code generation condition.)

<Condition (2)>
- Vehicle speed remains below 2 km/h {1.24 MPH} as detected for 20 or 60 seconds when engine speed is 1000 rpm and transmission is in neutral.
  (Warning lamp (orange) is lit and diagnosis code is displayed on first establishment of code generation condition.)

[Diagnosis check timing]
<Condition (1)>
- Fault diagnosis is performed only once during the driving cycle.

<Condition (2)>
- Fault diagnosis is continuously performed during the driving cycle.

[Diagnostic requirement]
–

[Control effected by electronic control unit during fault]
Electronic control unit varies in the way of control by the color of warning lamp.
<Warning lamp: Orange>
- Vehicle speed is fixed at backup value.
- Misfire detection is stopped.
- In-use performance counter is stopped.
- Auto cruise control stopped
- Speed limitation device control is stopped.
- Idle up is stopped.
- Related fault check is stopped.

<Warning lamp: Red>
- Vehicle speed is fixed at backup value.
- Auto cruise control stopped
- Speed limitation device control is stopped.
- Traveled distance computation is stopped.
- Related fault check is stopped.

[Probable cause of trouble]
- Open-circuit or short-circuit of harness between electronic control unit and pulse divider (built in meter cluster)
- Malfunction of each connector
- Malfunction of pulse divider (built in meter cluster)
- Malfunction of electronic control unit

[Recoverability]
- Recovered if signal becomes normal with starter switch in ON position.
  (Timing of warning lamp/diagnosis code OFF depends on condition.)

<Condition (1)>
- Lamp is extinguished and code is cleared at fourth diagnosis code display after recovery.

<Condition (2)>
- Lamp is extinguished and code is cleared simultaneously with recovery.

[Electronic Control Unit Connection Diagram]

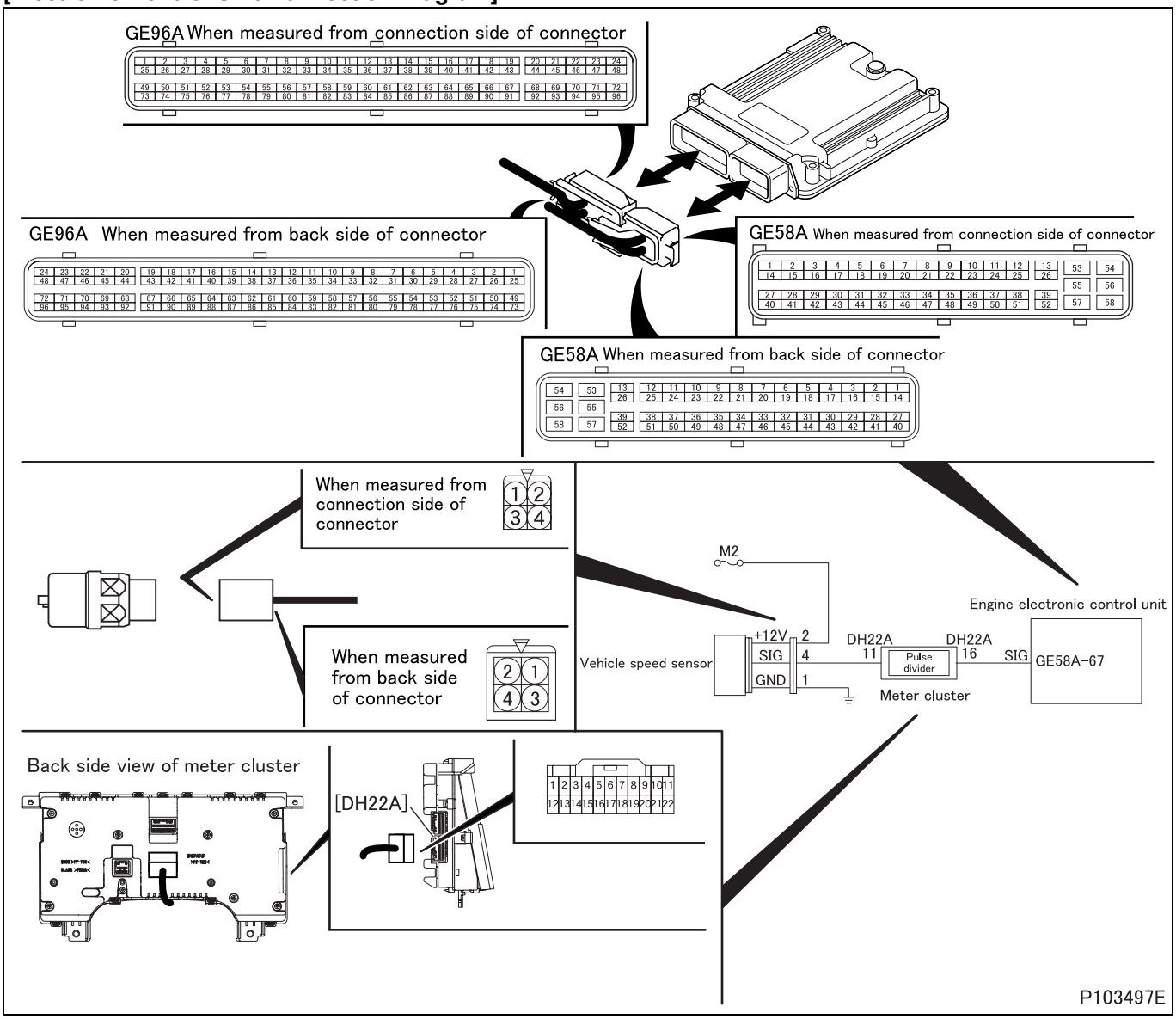

[Parts Identification and Location]

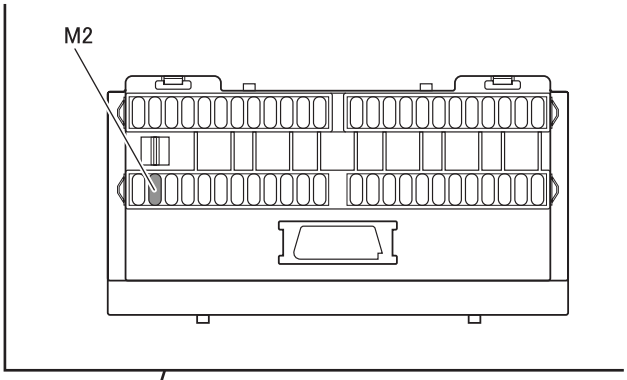

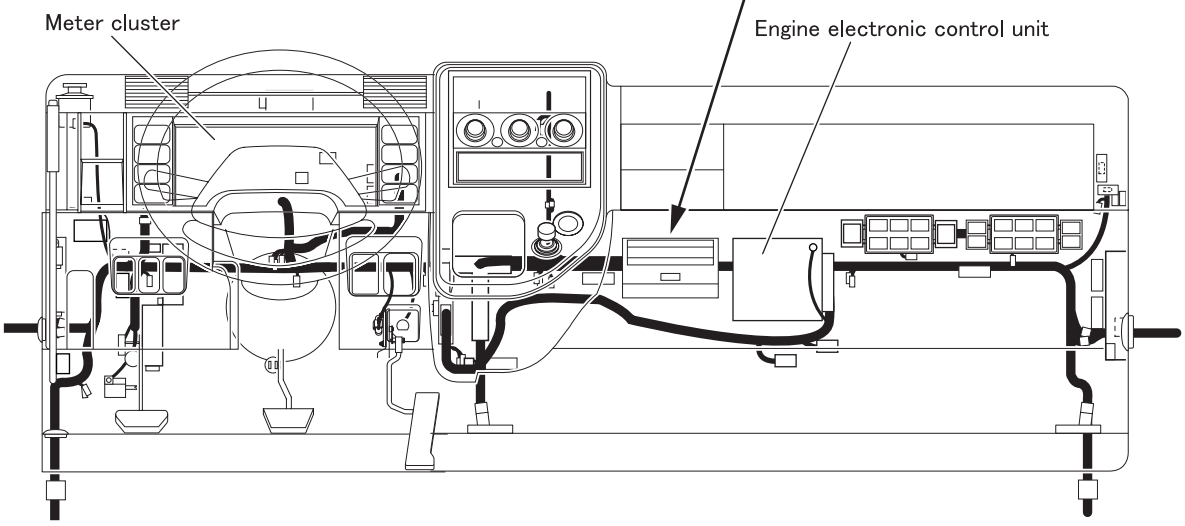

Left side view of manual transmission

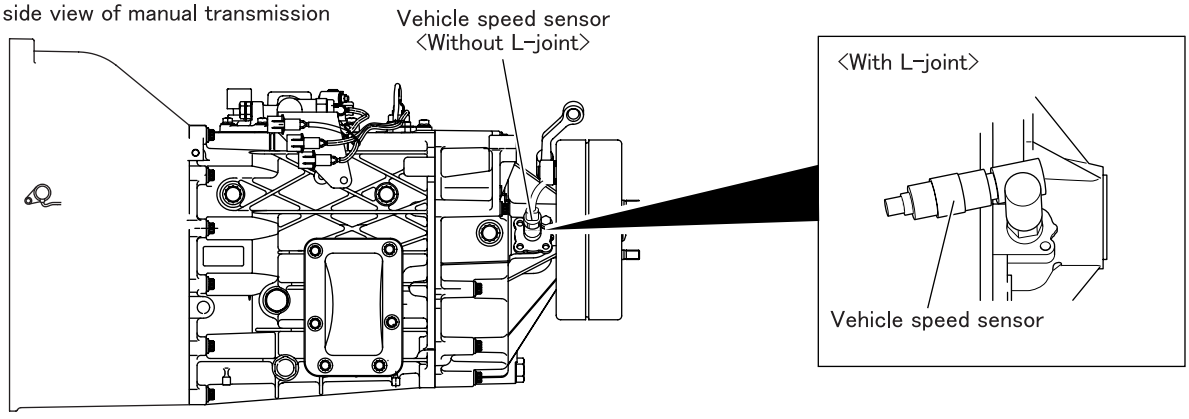

Left side view of automatic transmission

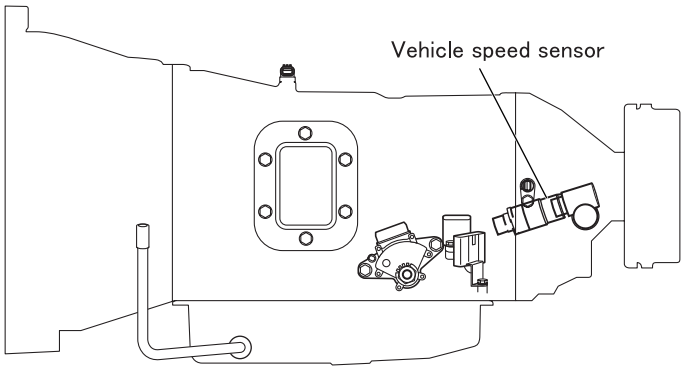

Transfer (FG)

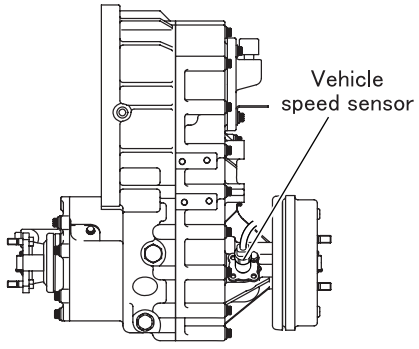

P107332E

[Fault diagnosis]

- Perform checks in the sequence of the following steps.

Step 1	Inspection items		Inspection by control data
	Maintenance item		**<General Scanning Tool used>** • Measure item “Vehicle Speed Sensor”. **<Multi-Use Tester used>** • Measure item No. 90 “Vehicle Speed” of Service Data.
	Inspection condition		During vehicle operation
	Requirements		Same indication as speedometer is given.
	Inspection result (Is the judging standard satisfied?)	YES	Go to transient fault (See Gr00.).
		NO	Go to step 2.

Step 2	Inspection items		Inspection by electronic control unit connector (signal)
	Maintenance item		Measure value of voltage between connector (GE96A) terminal No. 67 (+) and chassis ground.
	Inspection condition		• Starter switch: ON • Engine: stopped • Measure from back side of connector of harness with each device connected to harness. • Remove sensor and slowly turn sensor shaft.
	Requirements		• Low pulse: 0.5 V or less • High pulse: 8 ± 1 V
	Inspection result (Is the judging standard satisfied?)	YES	Go to step 3.
		NO	Go to step 4.

Step 3	Inspection items		Inspection of electronic control unit connector
	Maintenance item		Inspection of connector
	Inspection condition		–
	Requirements		• Connector is properly connected. • No trace of water entry is found. • No corrosion is found in terminal. • Connection to terminal is appropriate.
	Inspection result (Is the judging standard satisfied?)	YES	Go to step 10.
		NO	Modify connector.

Step 4	Inspection items		Inspection of harness between electronic control unit and pulse divider
	Maintenance item		Check circuit between electronic control unit connector (GE96A) terminal No. 67 and meter cluster connector (DH22A) terminal No. 18.
	Inspection condition		Disconnect each device from harness and measure from connection side of harness connector.
	Requirements		There is continuity.
	Inspection result (Is the judging standard satisfied?)	YES	Go to step 5.
		NO	Modify harness.

Step 5	Inspection items		Inspection of vehicle speed sensor
	Maintenance item		Measure maximum value A (high pulse voltage) and minimum value B (low pulse voltage) of voltage generated between connector terminals No. 4 (+) and 1 (–).
	Inspection condition		Slowly turn sensor shaft with voltage DC 12 V applied between terminals No. 2 (+) and No. 1 (–).
	Requirements		• Low pulse: 0.5 V or less • High pulse: 8 ± 1 V
	Inspection result (Is the judging standard satisfied?)	YES	Go to step 6.
		NO	Replacement of sensor

<Step 5 inspection diagram>

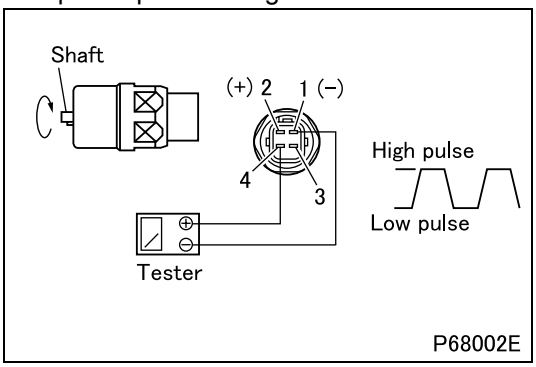

Step 6	Inspection items		Inspection of sensor harness (power supply)
	Maintenance item		Check circuit between connector terminal No. 2 and fuse (M2).
	Inspection condition		Disconnect each device from harness and measure from connection side of harness connector.
	Requirements		There is continuity.
	Inspection result (Is the judging standard satisfied?)	YES	Go to step 7.
		NO	Modify harness.

Step 7	Inspection items		Inspection of sensor harness (ground)
	Maintenance item		Check circuit between connector terminal No. 1 and chassis ground.
	Inspection condition		Disconnect each device from harness and measure from connection side of harness connector.
	Requirements		There is continuity.
	Inspection result (Is the judging standard satisfied?)	YES	Go to step 8.
		NO	Modify harness.

Step 8	Inspection items		Inspection of sensor harness (signal)
	Maintenance item		Check circuit between sensor connector terminal No. 4 and meter cluster connector (DH22A) terminal No. 11.
	Inspection condition		Disconnect each device from harness and measure from connection side of harness connector.
	Requirements		There is continuity.
	Inspection result (Is the judging standard satisfied?)	YES	Go to step 9.
		NO	Modify harness.

Step 9	Inspection items		Inspection by pulse divider connector (meter cluster)
	Maintenance item		Measure value of voltage between connector (DH22A) terminal No. 16 (+) and No. 6 (–).
	Inspection condition		• Measure from back side of connector of harness with each device connected to harness. • Starter switch: ON • Remove sensor and slowly turn sensor shaft.
	Requirements		• Low pulse: 0.5 V or less • High pulse: 8 ± 1 V
	Inspection result (Is the judging standard satisfied?)	YES	Go to step 10.
		NO	Replacement of pulse divider (meter cluster)

Step 10	Inspection items		Inspection by control data
	Maintenance item		**<General Scanning Tool used>** • Measure item “Vehicle Speed Sensor”. **<Multi-Use Tester used>** • Measure item No. 90 “Vehicle Speed” of Service Data.
	Inspection condition		During vehicle operation
	Requirements		Same indication as speedometer is given.
	Inspection result (Is the judging standard satisfied?)	YES	Go to transient fault (See Gr00.).
		NO	Replacement of electronic control unit

[Fault code]
Diagnosis code: P0502/Flash code: 25
[Monitor]
Failure of vehicle speed sensor
[Fault (outline)]
Too low
[Diagnosis check]
- Vehicle speed sensor output signal is monitored. (too low)

[Code generation condition]
- Vehicle speed output from vehicle speed sensor remains less than 1 km/h {0.62 MPH} for 3 seconds.
  (Warning lamp is lit and diagnosis code is displayed on third establishment of code generation conditions.)

[Diagnosis check timing]
- Fault diagnosis is performed only once during the driving cycle.

[Diagnostic requirement]
- Engine speed: more than 2000 rpm
- Fuel injection quantity: above 50 mg/cyc
- Time till above conditions were met: more than 2 seconds
- Battery voltage: in order
- MPROP (rail pressure control valve): in order

[Control effected by electronic control unit during fault]
- Vehicle speed is fixed at backup value.
- Misfire detection is stopped.
- In-use performance counter is stopped.
- Auto cruise control stopped
- Speed limitation device control is stopped.
- Idle up is stopped.
- Related fault check is stopped.

[Probable cause of trouble]
- Open-circuit or short-circuit of harness between electronic control unit and pulse divider (built in meter cluster)
- Malfunction of each connector
- Malfunction of pulse divider (built in meter cluster)
- Malfunction of electronic control unit

[Recoverability]
- Recovered if signal becomes normal with starter switch in ON position.
  (Warning lamp is extinguished and diagnosis code is cleared at fourth display of diagnosis code after recovery.)

[Electronic Control Unit Connection Diagram]

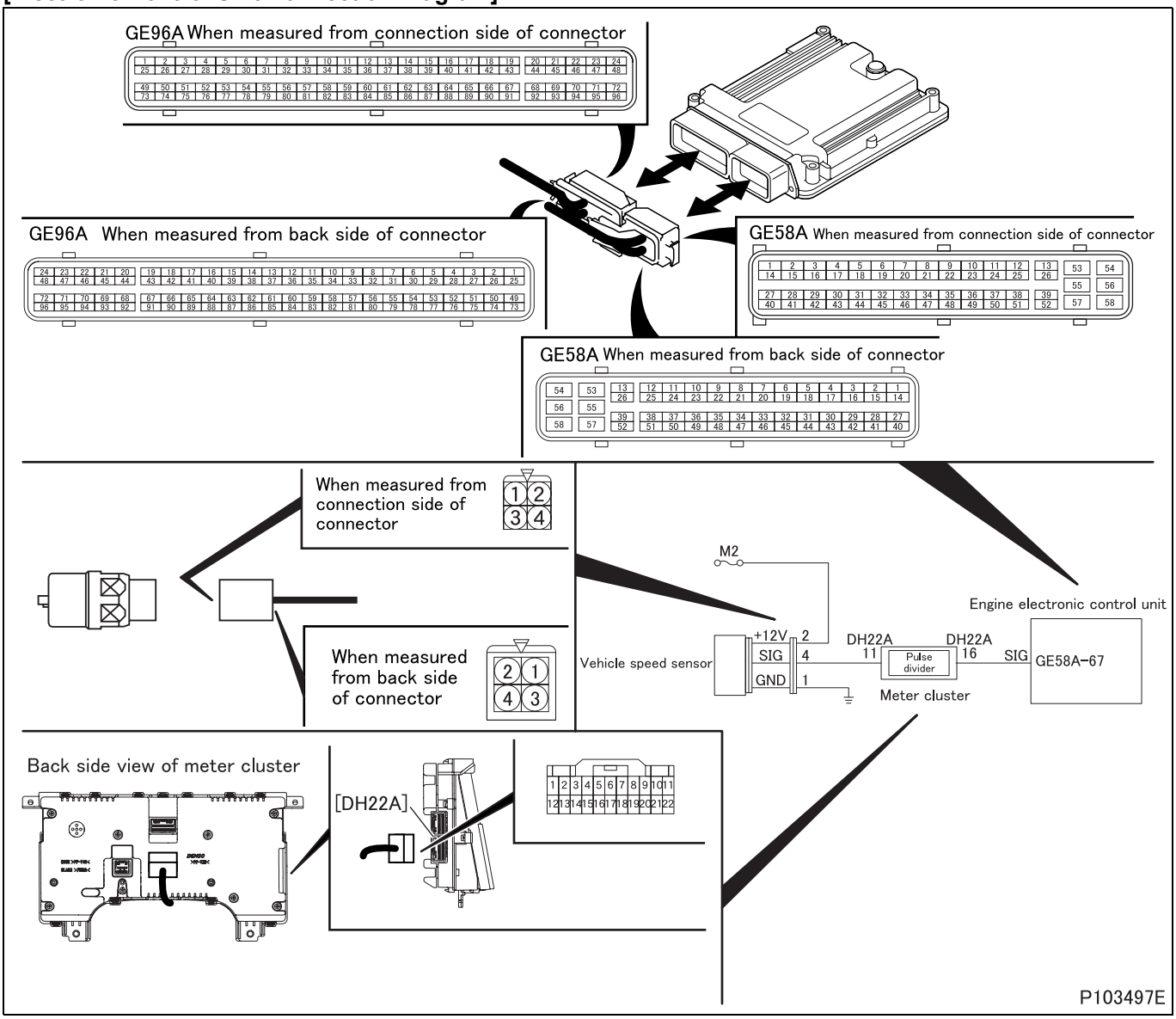

[Parts Identification and Location]

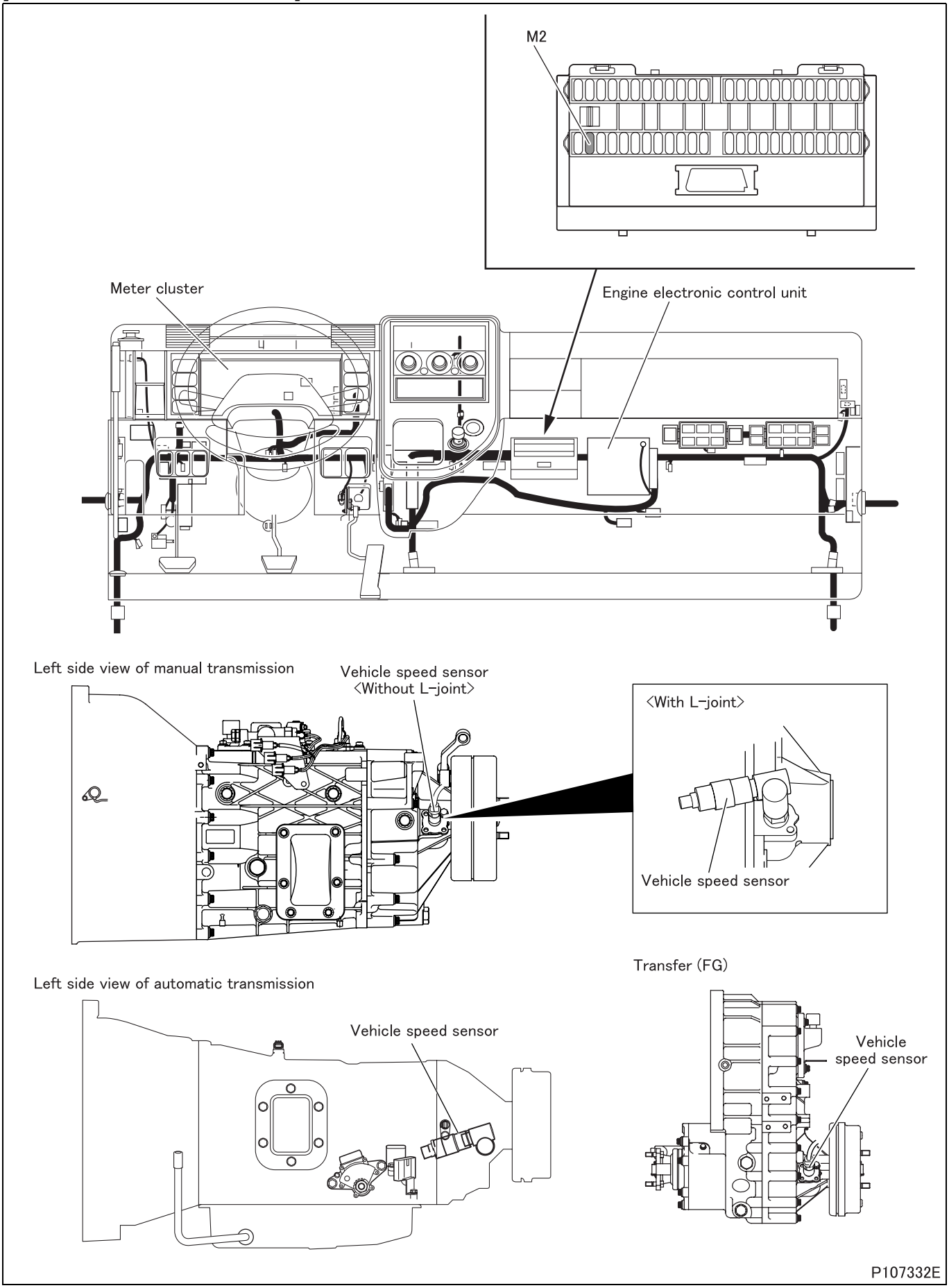

P107332E

[Fault diagnosis]

- Perform checks in the sequence of the following steps.

Step 1	Inspection items		Inspection by control data
	Maintenance item		**<General Scanning Tool used>** • Measure item “Vehicle Speed Sensor”. **<Multi-Use Tester used>** • Measure item No. 90 “Vehicle Speed” of Service Data.
	Inspection condition		During vehicle operation
	Requirements		Same indication as speedometer is given.
	Inspection result (Is the judging standard satisfied?)	YES	Go to transient fault (See Gr00.).
		NO	Go to step 2.

Step 2	Inspection items		Inspection by electronic control unit connector (signal)
	Maintenance item		Measure value of voltage between connector (GE96A) terminal No. 67 (+) and chassis ground.
	Inspection condition		• Starter switch: ON • Engine: stopped • Measure from back side of connector of harness with each device connected to harness. • Remove sensor and slowly turn sensor shaft.
	Requirements		• Low pulse: 0.5 V or less • High pulse: 8 ± 1 V
	Inspection result (Is the judging standard satisfied?)	YES	Go to step 3.
		NO	Go to step 4.

Step 3	Inspection items		Inspection of electronic control unit connector
	Maintenance item		Inspection of connector
	Inspection condition		–
	Requirements		• Connector is properly connected. • No trace of water entry is found. • No corrosion is found in terminal. • Connection to terminal is appropriate.
	Inspection result (Is the judging standard satisfied?)	YES	Go to step 10.
		NO	Modify connector.

Step 4	Inspection items		Inspection of harness between electronic control unit and pulse divider
	Maintenance item		Check circuit between electronic control unit connector (GE96A) terminal No. 67 and meter cluster connector (DH22A) terminal No. 18.
	Inspection condition		Disconnect each device from harness and measure from connection side of harness connector.
	Requirements		There is continuity.
	Inspection result (Is the judging standard satisfied?)	YES	Go to step 5.
		NO	Modify harness.

Step 5	Inspection items		Inspection of vehicle speed sensor
	Maintenance item		Measure maximum value A (high pulse voltage) and minimum value B (low pulse voltage) of voltage generated between connector terminals No. 4 (+) and 1 (–).
	Inspection condition		Slowly turn sensor shaft with voltage DC 12 V applied between terminals No. 2 (+) and No. 1 (–).
	Requirements		• Low pulse: 0.5 V or less • High pulse: 8 ± 1 V
	Inspection result (Is the judging standard satisfied?)	YES	Go to step 6.
		NO	Replacement of sensor

<Step 5 inspection diagram>

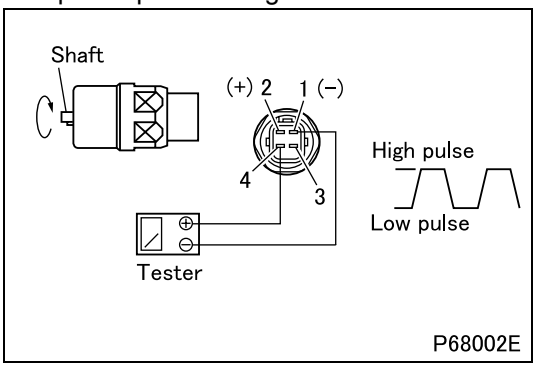

Step 6	Inspection items		Inspection of sensor harness (power supply)
	Maintenance item		Check circuit between connector terminal No. 2 and fuse (M2).
	Inspection condition		Disconnect each device from harness and measure from connection side of harness connector.
	Requirements		There is continuity.
	Inspection result (Is the judging standard satisfied?)	YES	Go to step 7.
		NO	Modify harness.

Step 7	Inspection items		Inspection of sensor harness (ground)
	Maintenance item		Check circuit between connector terminal No. 1 and chassis ground.
	Inspection condition		Disconnect each device from harness and measure from connection side of harness connector.
	Requirements		There is continuity.
	Inspection result (Is the judging standard satisfied?)	YES	Go to step 8.
		NO	Modify harness.

Step 8	Inspection items		Inspection of sensor harness (signal)
	Maintenance item		Check circuit between sensor connector terminal No. 4 and meter cluster connector (DH22A) terminal No. 11.
	Inspection condition		Disconnect each device from harness and measure from connection side of harness connector.
	Requirements		There is continuity.
	Inspection result (Is the judging standard satisfied?)	YES	Go to step 9.
		NO	Modify harness.

Step 9	Inspection items		Inspection by pulse divider connector (meter cluster)
	Maintenance item		Measure value of voltage between connector (DH22A) terminal No. 16 (+) and No. 6 (–).
	Inspection condition		• Measure from back side of connector of harness with each device connected to harness. • Starter switch: ON • Remove sensor and slowly turn sensor shaft.
	Requirements		• Low pulse: 0.5 V or less • High pulse: 8 ± 1 V
	Inspection result (Is the judging standard satisfied?)	YES	Go to step 10.
		NO	Replacement of pulse divider (meter cluster)

Step 10	Inspection items		Inspection by control data
	Maintenance item		**<General Scanning Tool used>** • Measure item “Vehicle Speed Sensor”. **<Multi-Use Tester used>** • Measure item No. 90 “Vehicle Speed” of Service Data.
	Inspection condition		During vehicle operation
	Requirements		Same indication as speedometer is given.
	Inspection result (Is the judging standard satisfied?)	YES	Go to transient fault (See Gr00.).
		NO	Replacement of electronic control unit

[Fault code]
Diagnosis code: P0503/Flash code: 25
[Monitor]
Failure of vehicle speed sensor
[Fault (outline)]
Too high
[Diagnosis check]
- Vehicle speed sensor output signal is monitored. (too high)

[Code generation condition]
- Vehicle speed output from vehicle speed sensor remains more than 70 km/h {43.5 MPH} for 3 seconds.
  (Warning lamp is lit and diagnosis code is displayed on third establishment of code generation conditions.)

[Diagnosis check timing]
- Fault diagnosis is performed only once during the driving cycle.

[Diagnostic requirement]
- Engine speed: 600 to 1500 rpm
- Fuel injection quantity: above 35 mg/cyc
- Time till above conditions were met: more than 2 seconds
- Battery voltage: in order
- MPROP (rail pressure control valve): in order

[Control effected by electronic control unit during fault]
- Vehicle speed is fixed at backup value.
- Misfire detection is stopped.
- In-use performance counter is stopped.
- Auto cruise control stopped
- Speed limitation device control is stopped.
- Idle up is stopped.
- Related fault check is stopped.

[Probable cause of trouble]
- Open-circuit or short-circuit of harness between electronic control unit and pulse divider (built in meter cluster)
- Malfunction of each connector
- Malfunction of pulse divider (built in meter cluster)
- Malfunction of electronic control unit

[Recoverability]
- Recovered if signal becomes normal with starter switch in ON position.
  (Warning lamp is extinguished and diagnosis code is cleared at fourth display of diagnosis code after recovery.)

[Electronic Control Unit Connection Diagram]

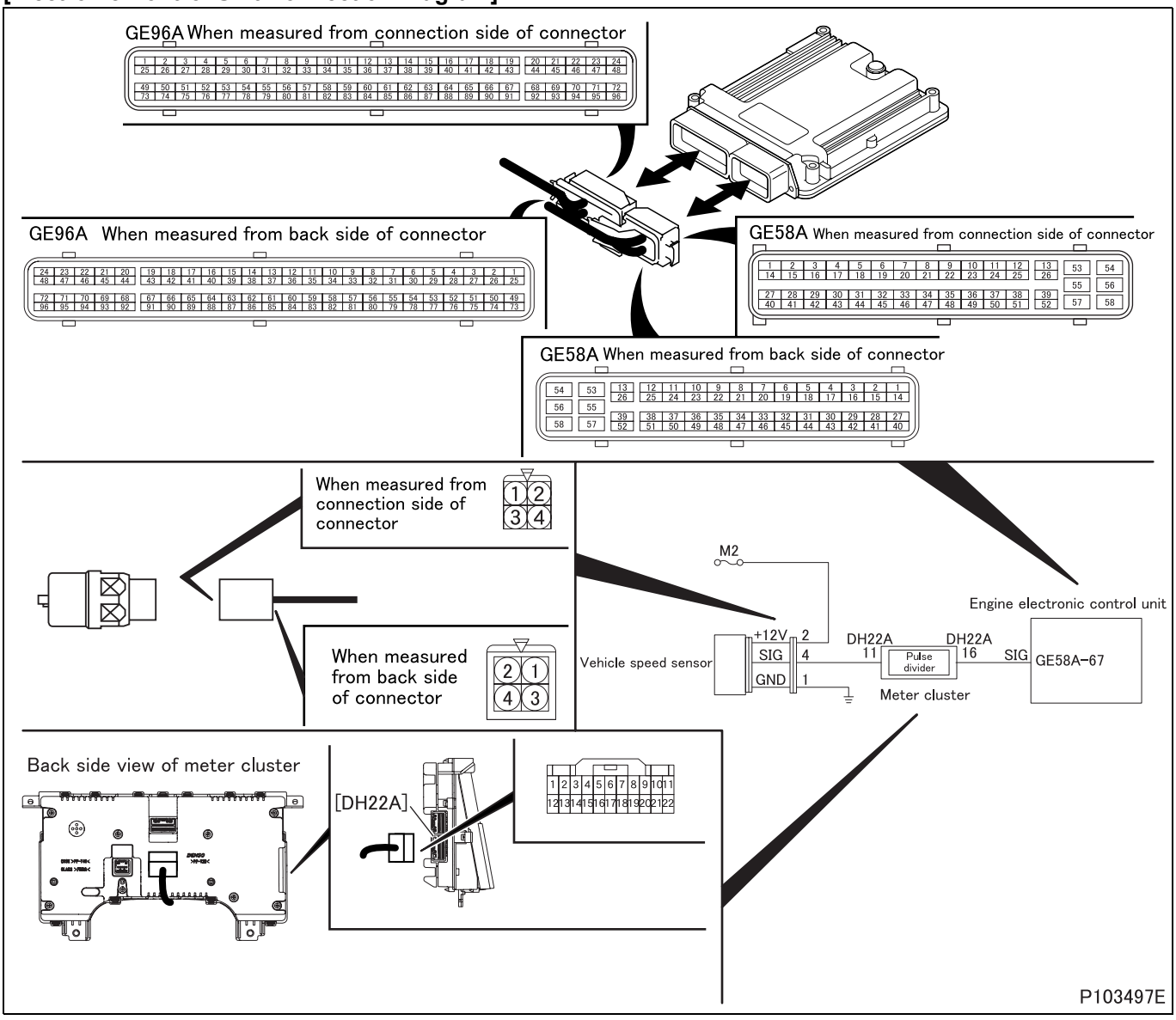

[Parts Identification and Location]

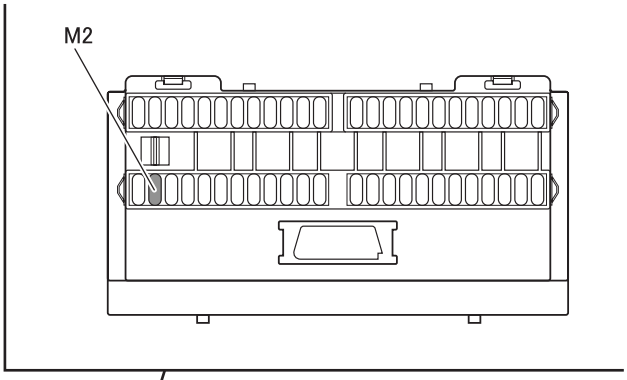

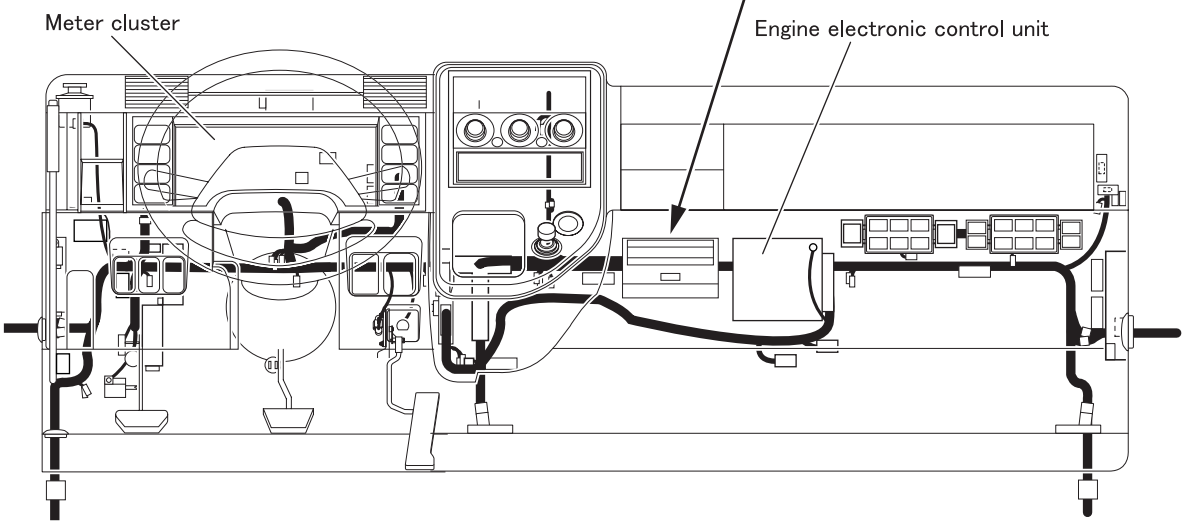

Left side view of manual transmission

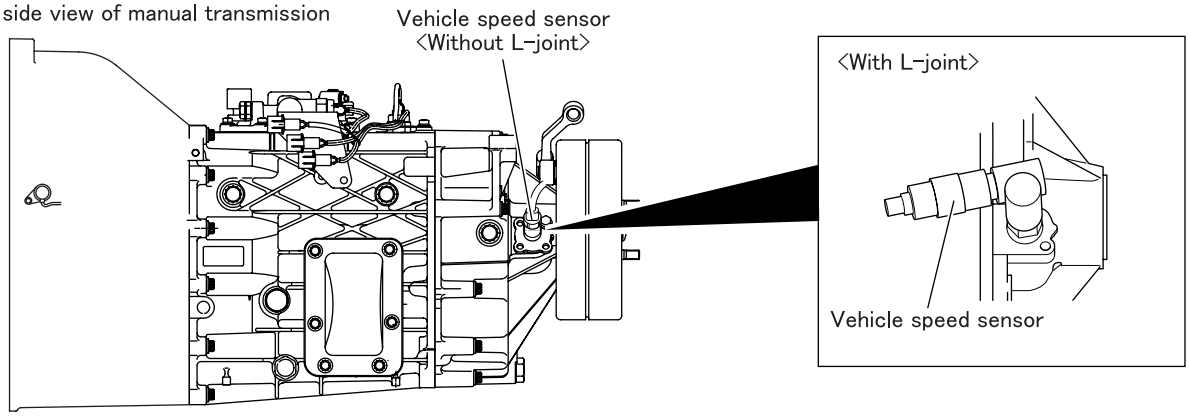

Left side view of automatic transmission

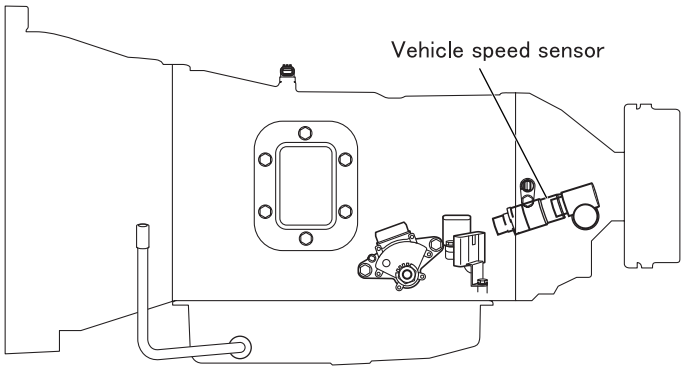

Transfer (FG)

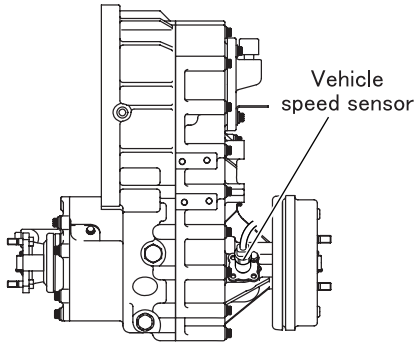

P107332E

[Fault diagnosis]

- Perform checks in the sequence of the following steps.

Step 1	Inspection items		Inspection by control data
	Maintenance item		**<General Scanning Tool used>** • Measure item “Vehicle Speed Sensor”. **<Multi-Use Tester used>** • Measure item No. 90 “Vehicle Speed” of Service Data.
	Inspection condition		During vehicle operation
	Requirements		Same indication as speedometer is given.
	Inspection result (Is the judging standard satisfied?)	YES	Go to transient fault (See Gr00.).
		NO	Go to step 2.

Step 2	Inspection items		Inspection by electronic control unit connector (signal)
	Maintenance item		Measure value of voltage between connector (GE96A) terminal No. 67 (+) and chassis ground.
	Inspection condition		• Starter switch: ON • Engine: stopped • Measure from back side of connector of harness with each device connected to harness. • Remove sensor and slowly turn sensor shaft.
	Requirements		• Low pulse: 0.5 V or less • High pulse: 8 ± 1 V
	Inspection result (Is the judging standard satisfied?)	YES	Go to step 3.
		NO	Go to step 4.

Step 3	Inspection items		Inspection of electronic control unit connector
	Maintenance item		Inspection of connector
	Inspection condition		–
	Requirements		• Connector is properly connected. • No trace of water entry is found. • No corrosion is found in terminal. • Connection to terminal is appropriate.
	Inspection result (Is the judging standard satisfied?)	YES	Go to step 10.
		NO	Modify connector.

Step 4	Inspection items		Inspection of harness between electronic control unit and pulse divider
	Maintenance item		Check circuit between electronic control unit connector (GE96A) terminal No. 67 and meter cluster connector (DH22A) terminal No. 18.
	Inspection condition		Disconnect each device from harness and measure from connection side of harness connector.
	Requirements		There is continuity.
	Inspection result (Is the judging standard satisfied?)	YES	Go to step 5.
		NO	Modify harness.

Step 5	Inspection items		Inspection of vehicle speed sensor
	Maintenance item		Measure maximum value A (high pulse voltage) and minimum value B (low pulse voltage) of voltage generated between connector terminals No. 4 (+) and 1 (–).
	Inspection condition		Slowly turn sensor shaft with voltage DC 12 V applied between terminals No. 2 (+) and No. 1 (–).
	Requirements		• Low pulse: 0.5 V or less • High pulse: 8 ± 1 V
	Inspection result (Is the judging standard satisfied?)	YES	Go to step 6.
		NO	Replacement of sensor

<Step 5 inspection diagram>

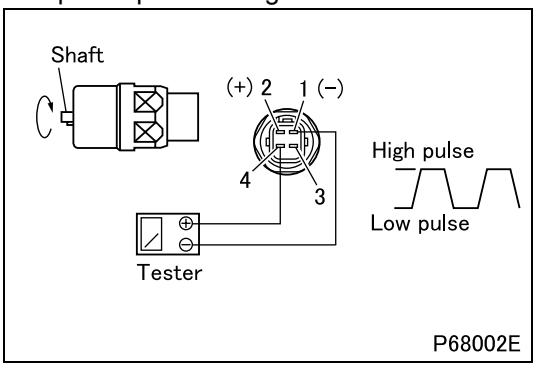

Step 6	Inspection items		Inspection of sensor harness (power supply)
	Maintenance item		Check circuit between connector terminal No. 2 and fuse (M2).
	Inspection condition		Disconnect each device from harness and measure from connection side of harness connector.
	Requirements		There is continuity.
	Inspection result (Is the judging standard satisfied?)	YES	Go to step 7.
		NO	Modify harness.

Step 7	Inspection items		Inspection of sensor harness (ground)
	Maintenance item		Check circuit between connector terminal No. 1 and chassis ground.
	Inspection condition		Disconnect each device from harness and measure from connection side of harness connector.
	Requirements		There is continuity.
	Inspection result (Is the judging standard satisfied?)	YES	Go to step 8.
		NO	Modify harness.

Step 8	Inspection items		Inspection of sensor harness (signal)
	Maintenance item		Check circuit between sensor connector terminal No. 4 and meter cluster connector (DH22A) terminal No. 11.
	Inspection condition		Disconnect each device from harness and measure from connection side of harness connector.
	Requirements		There is continuity.
	Inspection result (Is the judging standard satisfied?)	YES	Go to step 9.
		NO	Modify harness.

Step 9	Inspection items		Inspection by pulse divider connector (meter cluster)
	Maintenance item		Measure value of voltage between connector (DH22A) terminal No. 16 (+) and No. 6 (–).
	Inspection condition		• Measure from back side of connector of harness with each device connected to harness. • Starter switch: ON • Remove sensor and slowly turn sensor shaft.
	Requirements		• Low pulse: 0.5 V or less • High pulse: 8 ± 1 V
	Inspection result (Is the judging standard satisfied?)	YES	Go to step 10.
		NO	Replacement of pulse divider (meter cluster)

Step 10	Inspection items		Inspection by control data
	Maintenance item		**<General Scanning Tool used>** • Measure item “Vehicle Speed Sensor”. **<Multi-Use Tester used>** • Measure item No. 90 “Vehicle Speed” of Service Data.
	Inspection condition		During vehicle operation
	Requirements		Same indication as speedometer is given.
	Inspection result (Is the judging standard satisfied?)	YES	Go to transient fault (See Gr00.).
		NO	Replacement of electronic control unit

[Fault code]
Diagnosis code: P0506/Flash code: 52
[Monitor]
Abnormality in idling control (idling speed is too low)
[Fault (outline)]
Idle speed too low
[Diagnosis check]
- Idling speed of vehicle at a stop (in parked condition) is detected by engine speed sensor as actual engine speed and compared with target engine speed for control by engine electronic control unit.

[Code generation condition]
- Actual engine speed remains –100 rpm or less below target engine speed (short of target) for 10 seconds.
  (Warning lamp is lit and diagnosis code is displayed on third establishment of code generation conditions.)

[Diagnosis check timing]
- Fault diagnosis is performed only once during the driving cycle.

[Diagnostic requirement]
- Engine status: normal (engine in operation)
- Vehicle speed: less than 2 km/h {1.24 MPH}
- Accelerator pedal position: less than 1%
- Brake is not applied.
- Accelerator pedal position sensor: in order
- Sensor 5 V power supply: in order
- Battery voltage: in order
- MPROP (rail pressure control valve): in order
- Vehicle speed sensor: in order
- Water temperature sensor: in order

[Control effected by electronic control unit during fault]
- Related fault check is stopped.

[Probable cause of trouble]
- Malfunction of injector

[Recoverability]
- Recovered if signal becomes normal with starter switch in ON position.
  (Warning lamp is extinguished and diagnosis code is cleared at fourth display of diagnosis code after recovery.)

[Fault code]
Diagnosis code: P0507/Flash code: 52
[Monitor]
Abnormality in idling control (idling speed is too high)
[Fault (outline)]
Idle speed too high
[Diagnosis check]
- Idling speed of vehicle at a stop (in parked condition) is detected by engine speed sensor as actual engine speed and compared with target engine speed for control by engine electronic control unit.

[Code generation condition]
- Actual engine speed remains 200 rpm or more above target engine speed (over target value at a large margin) for 10 seconds.
  (Warning lamp is lit and diagnosis code is displayed on third establishment of code generation conditions.)

[Diagnosis check timing]
- Fault diagnosis is performed only once during the driving cycle.

[Diagnostic requirement]
- Engine status: normal (engine in operation)
- Vehicle speed: less than 2 km/h {1.24 MPH}
- Accelerator pedal position: less than 1%
- Brake is not applied.
- Accelerator pedal position sensor: in order
- Sensor 5 V power supply: in order
- Battery voltage: in order
- MPROP (rail pressure control valve): in order
- Vehicle speed sensor: in order
- Water temperature sensor: in order

[Control effected by electronic control unit during fault]
- Related fault check is stopped.

[Probable cause of trouble]
- Malfunction of injector

[Recoverability]
- Recovered if signal becomes normal with starter switch in ON position.
  (Warning lamp is extinguished and diagnosis code is cleared at fourth display of diagnosis code after recovery.)

[Fault code]
Diagnosis code: P0544/Flash code: 87
[Monitor]
Characteristic abnormality of DPF temperature sensor 1
[Fault (outline)]
Gain and offset drift
[Diagnosis check]
- Difference in voltage output (temperature) between catalytic temperature sensor and DPF temperature sensor 1 is monitored for clogging of front oxidation catalyst.

[Code generation condition]
- Difference in temperature output remains excessively high (over 150°C {302°F}) or low (below –150°C {–238°F}) for 10 seconds <Relative check> and 20 seconds <Separate check>. (Warning lamp is lit and diagnosis code is displayed on third establishment of code generation condition.)

[Diagnosis check timing]
- Fault diagnosis is performed only once during the driving cycle.

[Diagnostic requirement]
- When catalytic temperature sensor and DPF temperature sensor 2 are the same in output.

[Control effected by electronic control unit during fault]
- Related fault check is stopped.

[Probable cause of trouble]
- Malfunction of DPF temperature sensor 1

[Recoverability]
- Recovered if signal becomes normal when starter switch is turned OFF to ON (power supply resumed to electronic control unit).
  (Warning lamp is extinguished and diagnosis code is cleared at fourth display of diagnosis code after recovery.)

[Fault code]
Diagnosis code: P0545/Flash code: 87
[Monitor]
Failure of DPF temperature sensor 1
[Fault (outline)]
Low signal range check
[Diagnosis check]
- Output voltage of DPF temperature sensor 1 is monitored.

[Code generation condition]
- Output voltage of DPF temperature sensor 1 remains below 0.36 V for 3 seconds. (sensor temperature: 1000°C {1832°F} or more)
  (Warning lamp is lit and diagnosis code is displayed on third establishment of code generation conditions.)

[Diagnosis check timing]
- Fault diagnosis is continuously performed during the driving cycle.

[Diagnostic requirement]
–

[Control effected by electronic control unit during fault]
- Pressure before ceramic diesel particulate filter is fixed at backup value.
- Diesel particulate filter regeneration is stopped.
- Particulate matter deposit computation is stopped.
- Related fault check is stopped.

[Probable cause of trouble]
- Open-circuit or short-circuit of harness between electronic control unit and sensor
- Malfunction of each connector
- Malfunction of sensor
- Malfunction of electronic control unit
- Malfunction of DPF temperature sensor 1

[Recoverability]
- Recovered if signal becomes normal with starter switch in ON position.
  (Warning lamp is extinguished and diagnosis code is cleared at fourth display of diagnosis code after recovery.)

[Electronic Control Unit Connection Diagram]

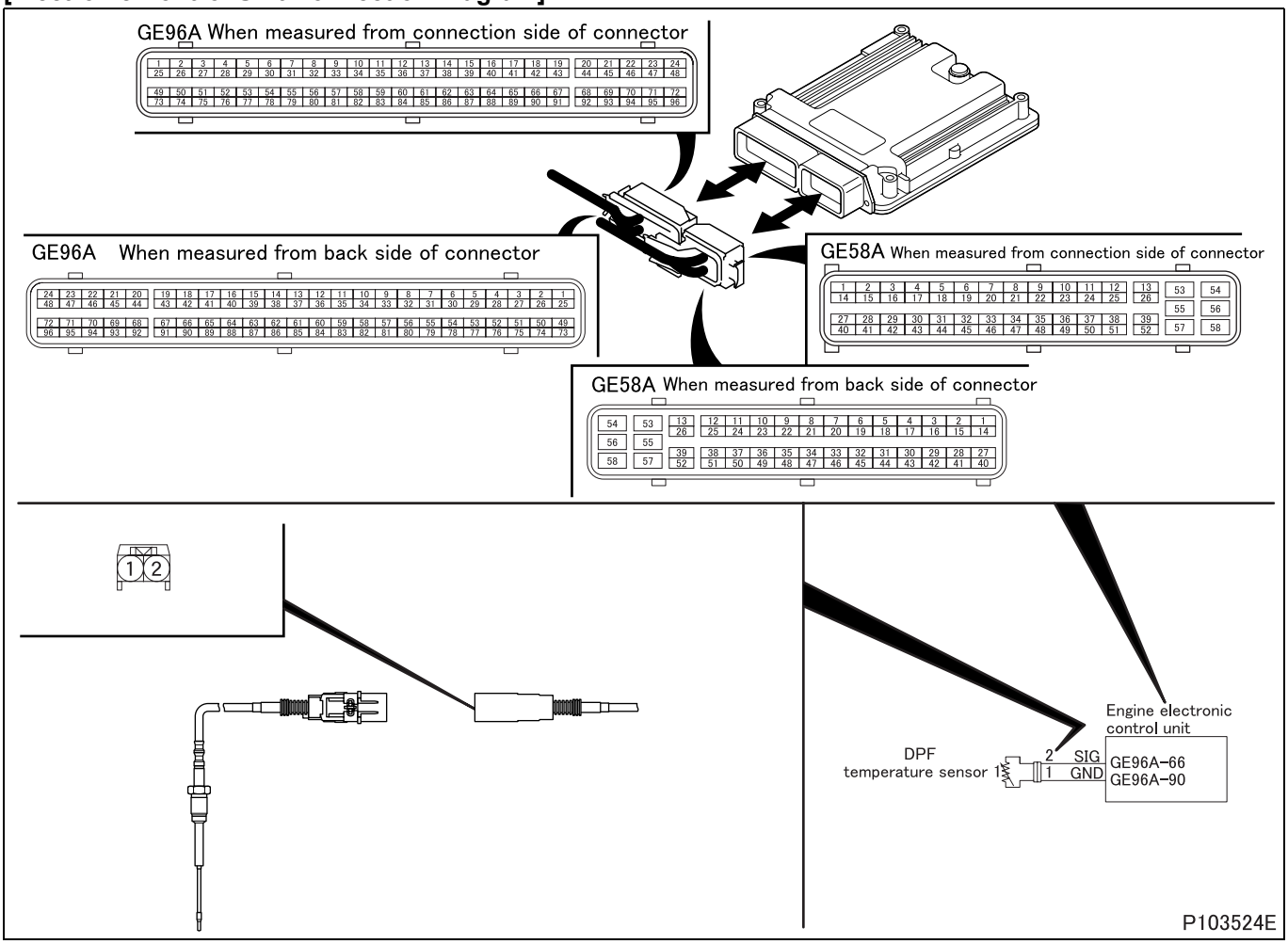

[Parts Identification and Location]

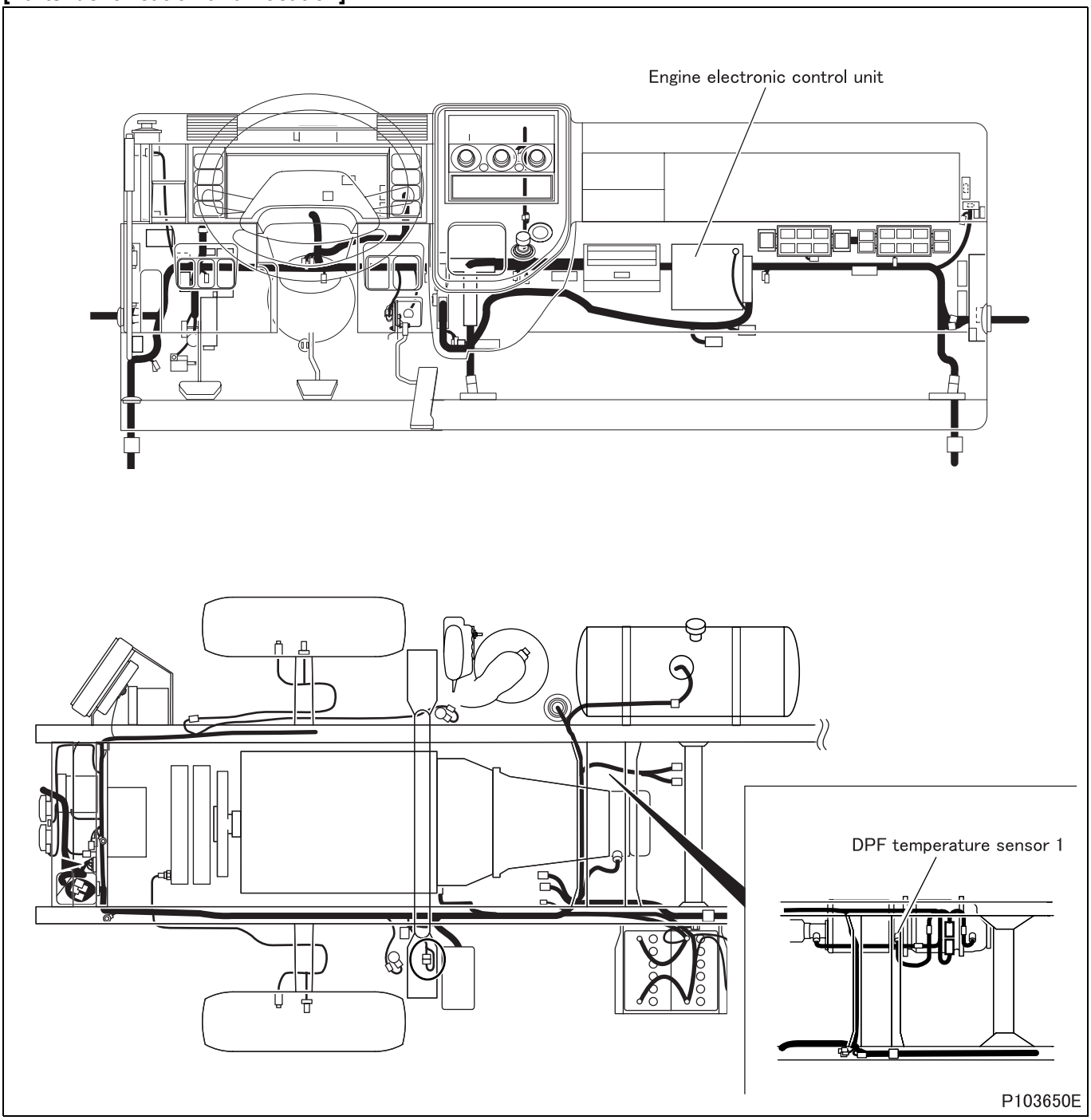

[Fault diagnosis]

- Perform checks in the sequence of the following steps.

Step 1	Inspection items		Inspection by control data
	Maintenance item		Measure item No. 25 “DPF Temperature (UpStream)” of Service Data.
	Inspection condition		While engine is warmed up
	Requirements		Temperature gradually increases.
	Inspection result (Is the judging standard satisfied?)	YES	Go to transient fault (See Gr00.).
		NO	Go to step 2.

Step 2	Inspection items		Inspection by electronic control unit connector
	Maintenance item		Measure value of resistance between connector (GE96A) terminal No. 66 and 90.
	Inspection condition		• Starter switch: OFF • Disconnect electronic control unit from harness and measure at vehicle-side connector half.
	Requirements		• 20°C {68°F} : 241.8 kΩ • 50°C {122°F} : 106.2 $^{+74.3}_{-41.8}$ kΩ • 100°C {212°F} : 33.58 $^{+17.60}_{-10.60}$ kΩ • 150°C {302°F} : 13.90 $^{+5.36}_{-3.60}$ kΩ • 200°C {392°F} : 6.896 $^{+2.064}_{-1.252}$ kΩ
	Inspection result (Is the judging standard satisfied?)	YES	Go to step 3.
		NO	Go to step 4.

Step 3	Inspection items		Inspection of electronic control unit connector
	Maintenance item		Inspection of connector
	Inspection condition		–
	Requirements		• Connector is properly connected. • No trace of water entry is found. • No corrosion is found in terminal. • Connection to terminal is appropriate.
	Inspection result (Is the judging standard satisfied?)	YES	Go to step 8.
		NO	Modify connector.

Step 4	Inspection items		Inspection of sensor connector
	Maintenance item		Inspection of connector
	Inspection condition		–
	Requirements		• Connector is properly connected. • No trace of water entry is found. • No corrosion is found in terminal. • Connection to terminal is appropriate.
	Inspection result (Is the judging standard satisfied?)	YES	Go to step 5.
		NO	Modify connector.

Step 5	Inspection items		Inspection of DPF temperature sensor 1 unit
	Maintenance item		Measure value of resistance between connector terminal No. 1 and 2.
	Inspection condition		• Put DPF temperature sensor 1 in container filled with engine oil. • Heat the oil to each of the specified temperatures. Stir the oil well while doing so.
	Requirements		• 20°C {68°F}: 241.8 kΩ • 50°C {122°F}: 106.2 $^{+74.3}_{-41.8}$ kΩ • 100°C {212°F}: 33.58 $^{+17.60}_{-10.60}$ kΩ • 150°C {302°F}: 13.90 $^{+5.36}_{-3.60}$ kΩ • 200°C {392°F}: 6.896 $^{+2.064}_{-1.252}$ kΩ
	Inspection result (Is the judging standard satisfied?)	YES	Go to step 6.
		NO	Replacement of sensor

<Step 5 inspection diagram>

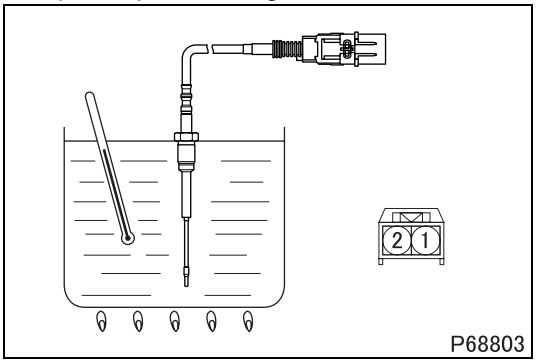

Step 6	Inspection items		Inspection of harness between electronic control unit and sensor (power supply)
	Maintenance item		Check circuit between electronic control unit connector (GE96A) terminal No. 66 and sensor connector terminal No. 2.
	Inspection condition		Disconnect each device from harness and measure from connection side of harness connector.
	Requirements		There is continuity.
	Inspection result (Is the judging standard satisfied?)	YES	Go to step 7.
		NO	Modify harness.

Step 7	Inspection items		Inspection of harness between electronic control unit and sensor (ground)
	Maintenance item		Check circuit between electronic control unit connector (GE96A) terminal No. 90 and sensor connector terminal No. 1.
	Inspection condition		Disconnect each device from harness and measure from connection side of harness connector.
	Requirements		There is continuity.
	Inspection result (Is the judging standard satisfied?)	YES	Go to step 8.
		NO	Modify harness.

Step 8	Inspection items		Inspection by control data
	Maintenance item		Measure item No. 25 “DPF Temperature (UpStream)” of Service Data.
	Inspection condition		While engine is warmed up
	Requirements		Temperature gradually increases.
	Inspection result (Is the judging standard satisfied?)	YES	Go to transient fault (See Gr00.).
		NO	Replacement of electronic control unit

[Fault code]
Diagnosis code: P0546/Flash code: 87
[Monitor]
Failure of DPF temperature sensor 1
[Fault (outline)]
High signal range check
[Diagnosis check]
- Output voltage of DPF temperature sensor 1 is monitored.

[Code generation condition]
- Output voltage of DPF temperature sensor 1 remains over 4.93 V for 30 seconds when engine speed is set at 1200 to 5000 rpm. (sensor temperature: 40°C {118°F} or less)
  (Warning lamp is lit and diagnosis code is displayed on third establishment of code generation conditions.)

[Diagnosis check timing]
- Fault diagnosis is performed only once during the driving cycle.

[Diagnostic requirement]
- Engine speed: 1200 to 5000 rpm
- Fuel injection quantity: 32 to 200 mg/cyc
- Water temperature: above –7°C {19°F}

[Control effected by electronic control unit during fault]
- Pressure before ceramic diesel particulate filter is fixed at backup value.
- Diesel particulate filter regeneration is stopped.
- Particulate matter deposit computation is stopped.
- Related fault check is stopped.

[Probable cause of trouble]
- Open-circuit or short-circuit of harness between electronic control unit and sensor
- Malfunction of each connector
- Malfunction of sensor
- Malfunction of electronic control unit
- Malfunction of DPF temperature sensor 1

[Recoverability]
- Recovered if signal becomes normal with starter switch in ON position.
  (Warning lamp is extinguished and diagnosis code is cleared at fourth display of diagnosis code after recovery.)

[Electronic Control Unit Connection Diagram]

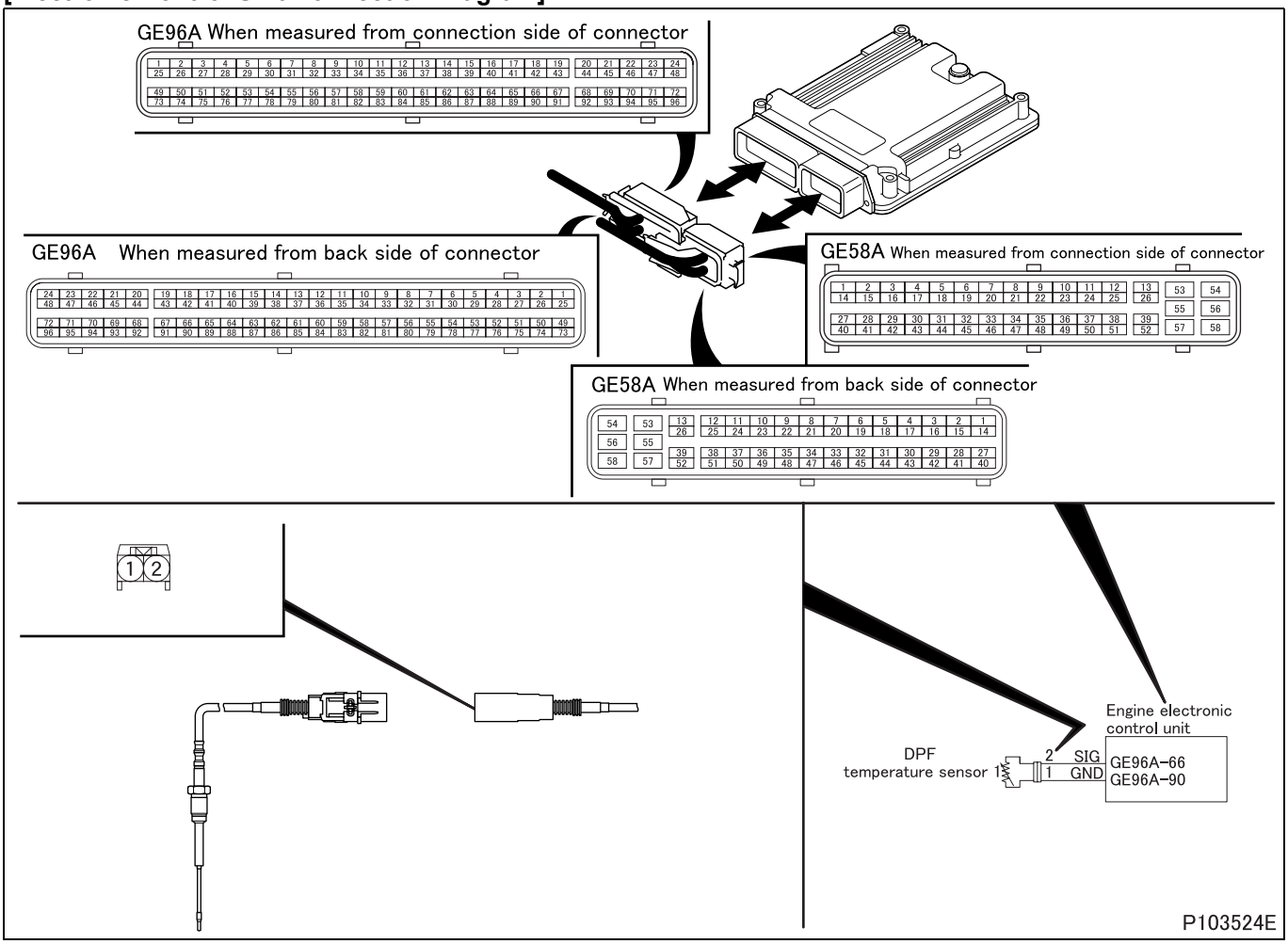

[Parts Identification and Location]

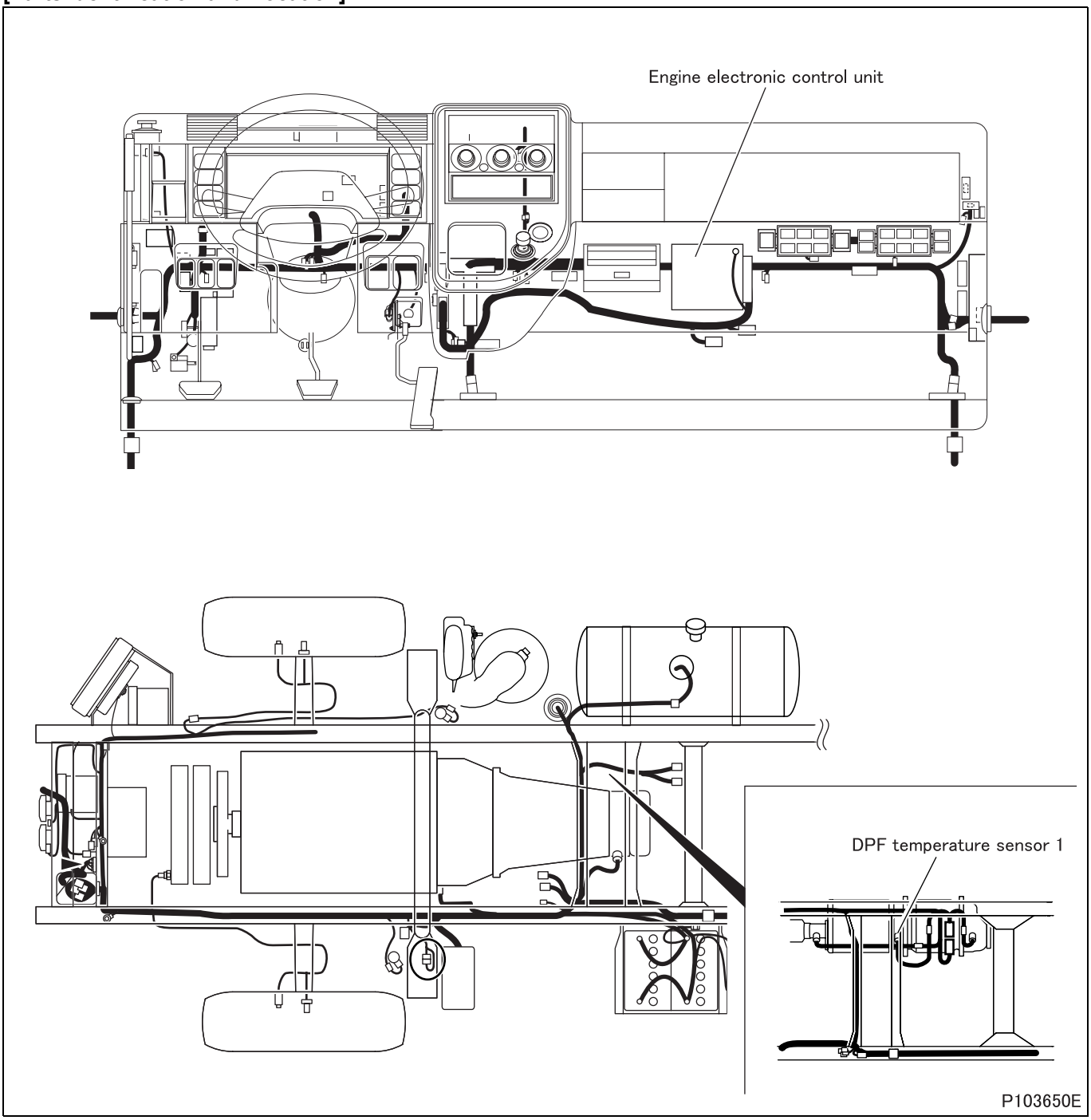

[Fault diagnosis]

- Perform checks in the sequence of the following steps.

Step 1	Inspection items		Inspection by control data
	Maintenance item		Measure item No. 25 “DPF Temperature (UpStream)” of Service Data.
	Inspection condition		While engine is warmed up
	Requirements		Temperature gradually increases.
	Inspection result (Is the judging standard satisfied?)	YES	Go to transient fault (See Gr00.).
		NO	Go to step 2.

Step 2	Inspection items		Inspection by electronic control unit connector
	Maintenance item		Measure value of resistance between connector (GE96A) terminal No. 66 and 90.
	Inspection condition		• Starter switch: OFF • Disconnect electronic control unit from harness and measure at vehicle-side connector half.
	Requirements		• 20°C {68°F} : 241.8 kΩ • 50°C {122°F} : 106.2 $^{+74.3}_{-41.8}$ kΩ • 100°C {212°F} : 33.58 $^{+17.60}_{-10.60}$ kΩ • 150°C {302°F} : 13.90 $^{+5.36}_{-3.60}$ kΩ • 200°C {392°F} : 6.896 $^{+2.064}_{-1.252}$ kΩ
	Inspection result (Is the judging standard satisfied?)	YES	Go to step 3.
		NO	Go to step 4.

Step 3	Inspection items		Inspection of electronic control unit connector
	Maintenance item		Inspection of connector
	Inspection condition		–
	Requirements		• Connector is properly connected. • No trace of water entry is found. • No corrosion is found in terminal. • Connection to terminal is appropriate.
	Inspection result (Is the judging standard satisfied?)	YES	Go to step 8.
		NO	Modify connector.

Step 4	Inspection items		Inspection of sensor connector
	Maintenance item		Inspection of connector
	Inspection condition		–
	Requirements		• Connector is properly connected. • No trace of water entry is found. • No corrosion is found in terminal. • Connection to terminal is appropriate.
	Inspection result (Is the judging standard satisfied?)	YES	Go to step 5.
		NO	Modify connector.

Step 5	Inspection items		Inspection of DPF temperature sensor 1 unit
	Maintenance item		Measure value of resistance between connector terminal No. 1 and 2.
	Inspection condition		• Put DPF temperature sensor 1 in container filled with engine oil. • Heat the oil to each of the specified temperatures. Stir the oil well while doing so.
	Requirements		• 20°C {68°F}: 241.8 kΩ • 50°C {122°F}: 106.2 $^{+74.3}_{-41.8}$ kΩ • 100°C {212°F}: 33.58 $^{+17.60}_{-10.60}$ kΩ • 150°C {302°F}: 13.90 $^{+5.36}_{-3.60}$ kΩ • 200°C {392°F}: 6.896 $^{+2.064}_{-1.252}$ kΩ
	Inspection result (Is the judging standard satisfied?)	YES	Go to step 6.
		NO	Replacement of sensor

<Step 5 inspection diagram>

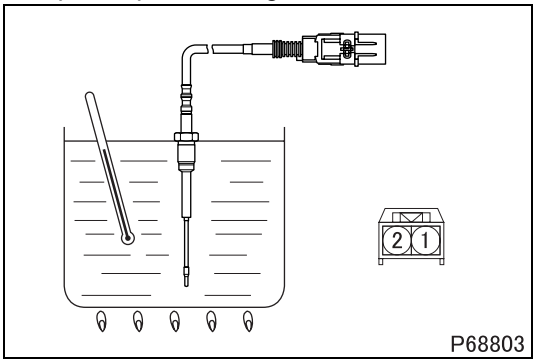

Step 6	Inspection items		Inspection of harness between electronic control unit and sensor (power supply)
	Maintenance item		Check circuit between electronic control unit connector (GE96A) terminal No. 66 and sensor connector terminal No. 2.
	Inspection condition		Disconnect each device from harness and measure from connection side of harness connector.
	Requirements		There is continuity.
	Inspection result (Is the judging standard satisfied?)	YES	Go to step 7.
		NO	Modify harness.

Step 7	Inspection items		Inspection of harness between electronic control unit and sensor (ground)
	Maintenance item		Check circuit between electronic control unit connector (GE96A) terminal No. 90 and sensor connector terminal No. 1.
	Inspection condition		Disconnect each device from harness and measure from connection side of harness connector.
	Requirements		There is continuity.
	Inspection result (Is the judging standard satisfied?)	YES	Go to step 8.
		NO	Modify harness.

Step 8	Inspection items		Inspection by control data
	Maintenance item		Measure item No. 25 “DPF Temperature (UpStream)” of Service Data.
	Inspection condition		While engine is warmed up
	Requirements		Temperature gradually increases.
	Inspection result (Is the judging standard satisfied?)	YES	Go to transient fault (See Gr00.).
		NO	Replacement of electronic control unit

[Fault code]
Diagnosis code: P0562/Flash code: 33
[Monitor]
Failure inside engine electronic control unit
[Fault (outline)]
Low signal range check
[Diagnosis check]
- Power supply voltage in engine electronic control unit at engine stop is monitored.

[Code generation condition]
Diagnosis code is generated under either of the following conditions.
<Condition (1)>
- Power supply voltage monitoring function in engine electronic control unit remains below 0 V for 3 seconds. (Warning lamp (red) is lit and diagnosis code is displayed on third establishment of code generation condition.)

<Condition (2)>
- Error flag (low limit) indicating power voltage in engine electronic control unit remains for 0.1 second. (Warning lamp (orange) is lit and diagnosis code is displayed on third establishment of code generation condition.)

[Diagnosis check timing]
<Condition (1)>
- Fault diagnosis is continuously performed during the driving cycle.

<Condition (2)>
- Fault diagnosis is performed only once during the driving cycle.

[Diagnostic requirement]
- Engine cranking: not controlled

[Control effected by electronic control unit during fault]
Electronic control unit varies in the way of control by the color of warning lamp.
<Warning lamp: Orange>
- Turbocharger initialization is stopped.
- Intake throttle initialization is inhibited.
- Misfire detection is stopped.
- Related fault check is stopped.

<Warning lamp: Red>
- Effects no special control.

[Probable cause of trouble]
- Malfunction of electronic control unit (replacement of electronic control unit)

[Recoverability]
- Recovered if signal becomes normal when starter switch is turned OFF to ON (power supply resumed to electronic control unit).
  (Timing of warning lamp/diagnosis code OFF depends on condition.)

<Condition (1)>
- Lamp is extinguished and code is cleared at fourth diagnosis code display after recovery.

<Condition (2)>
- Lamp is extinguished and code is cleared simultaneously with recovery.

[Fault code]
Diagnosis code: P0563/Flash code: 33
[Monitor]
Failure inside engine electronic control unit
[Fault (outline)]
High signal range check
[Diagnosis check]
- Power supply voltage in engine electronic control unit at engine stop is monitored.

[Code generation condition]
Diagnosis code is generated under either of the following conditions.
<Condition (1)>
- Power supply voltage monitoring function in engine electronic control unit remains over 2.3 V for 3 seconds. (Warning lamp (red) is lit and diagnosis code is displayed on third establishment of code generation condition.)

<Condition (2)>
- Error flag (high limit) indicating power voltage in engine electronic control unit remains for 0.1 second (Warning lamp (orange) is lit and diagnosis code is displayed on third establishment of code generation condition).

[Diagnosis check timing]
<Condition (1)>
- Fault diagnosis is continuously performed during the driving cycle.

<Condition (2)>
- Fault diagnosis is performed only once during the driving cycle.

[Diagnostic requirement]
- Engine cranking: not controlled

[Control effected by electronic control unit during fault]
Electronic control unit varies in the way of control by the color of warning lamp.
<Warning lamp: Orange>
- Turbocharger initialization is stopped.
- Intake throttle initialization is inhibited.
- Misfire detection is stopped.
- Related fault check is stopped.

<Warning lamp: Red>
- Effects no special control.

[Probable cause of trouble]
- Malfunction of electronic control unit (replacement of electronic control unit)

[Recoverability]
- Recovered if signal becomes normal when starter switch is turned OFF to ON (power supply resumed to electronic control unit).
  (Timing of warning lamp/diagnosis code OFF depends on condition.)

<Condition (1)>
- Lamp is extinguished and code is cleared at fourth diagnosis code display after recovery.

<Condition (2)>
- Lamp is extinguished and code is cleared simultaneously with recovery.

[Fault code]
Diagnosis code: P0600/Flash code: 64, 76
[Monitor]
Abnormality of speed limitation device system
[Fault (outline)]
- Controller area network
- Message timeout

[Diagnosis check]
- Controller area network communication between engine electronic control unit and multifunction vehicle control unit is monitored for abnormality.

[Code generation condition]
- No controller area network signal is received from multifunction vehicle control unit within specified time after engine start (time out).
  (Warning lamp is lit and diagnosis code is displayed on first establishment of code generation condition.)

[Diagnosis check timing]
- Fault diagnosis is continuously performed during the driving cycle.

[Diagnostic requirement]
- Controller area network communication in order

[Control effected by electronic control unit during fault]
- Speed limitation device control is stopped.

[Probable cause of trouble]
- Open-circuit or short-circuit of harness between electronic control unit and multifunction vehicle control unit
- Malfunction of each connector
- Malfunction of electronic control unit
- Malfunction of multifunction vehicle control unit

[Recoverability]
- Recovered if signal becomes normal when starter switch is turned OFF to ON (power supply resumed to electronic control unit).
  (Warning lamp is extinguished and diagnosis code is cleared simultaneously with recovery.)

[Electronic Control Unit Connection Diagram]

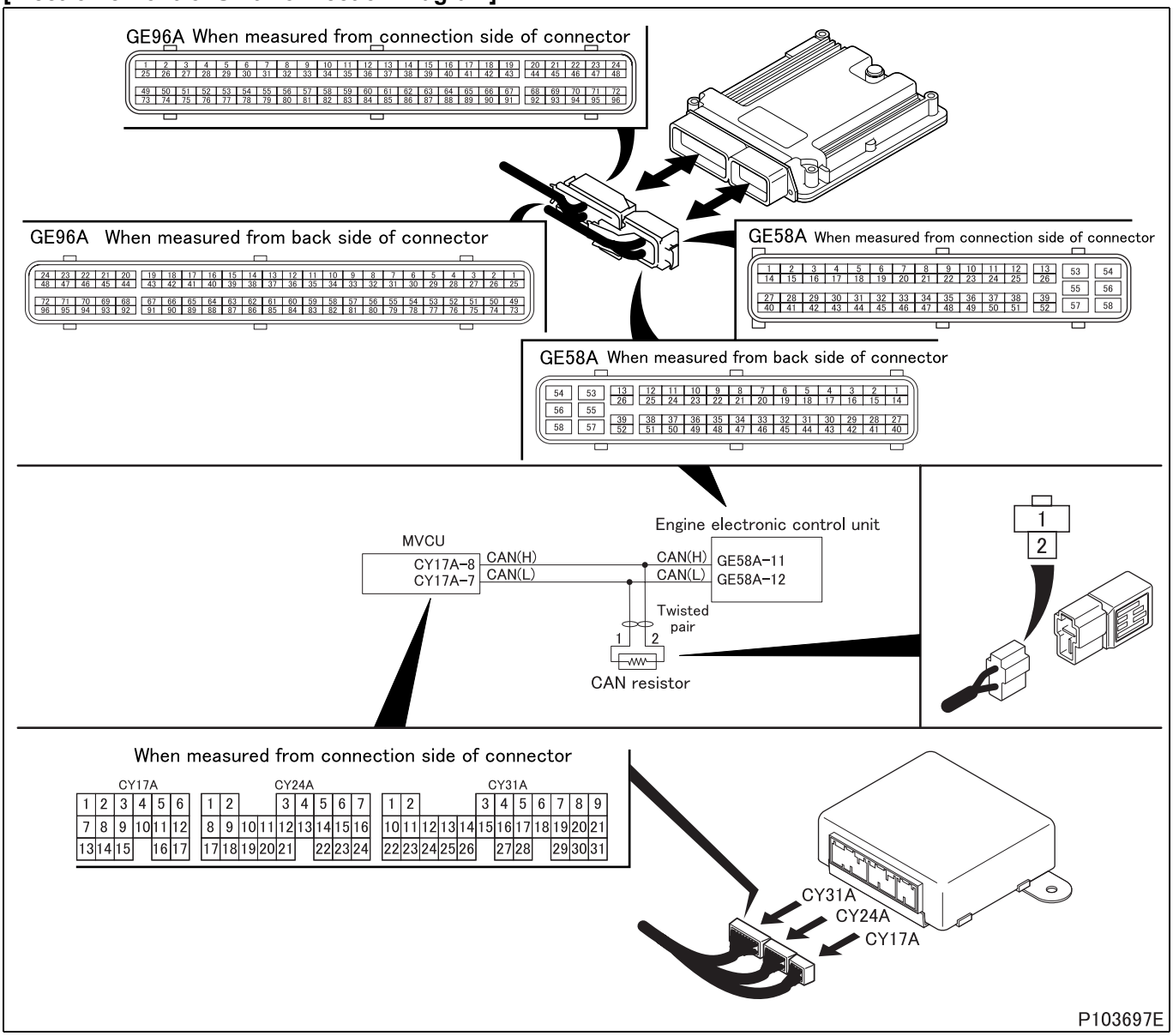

[Parts Identification and Location]

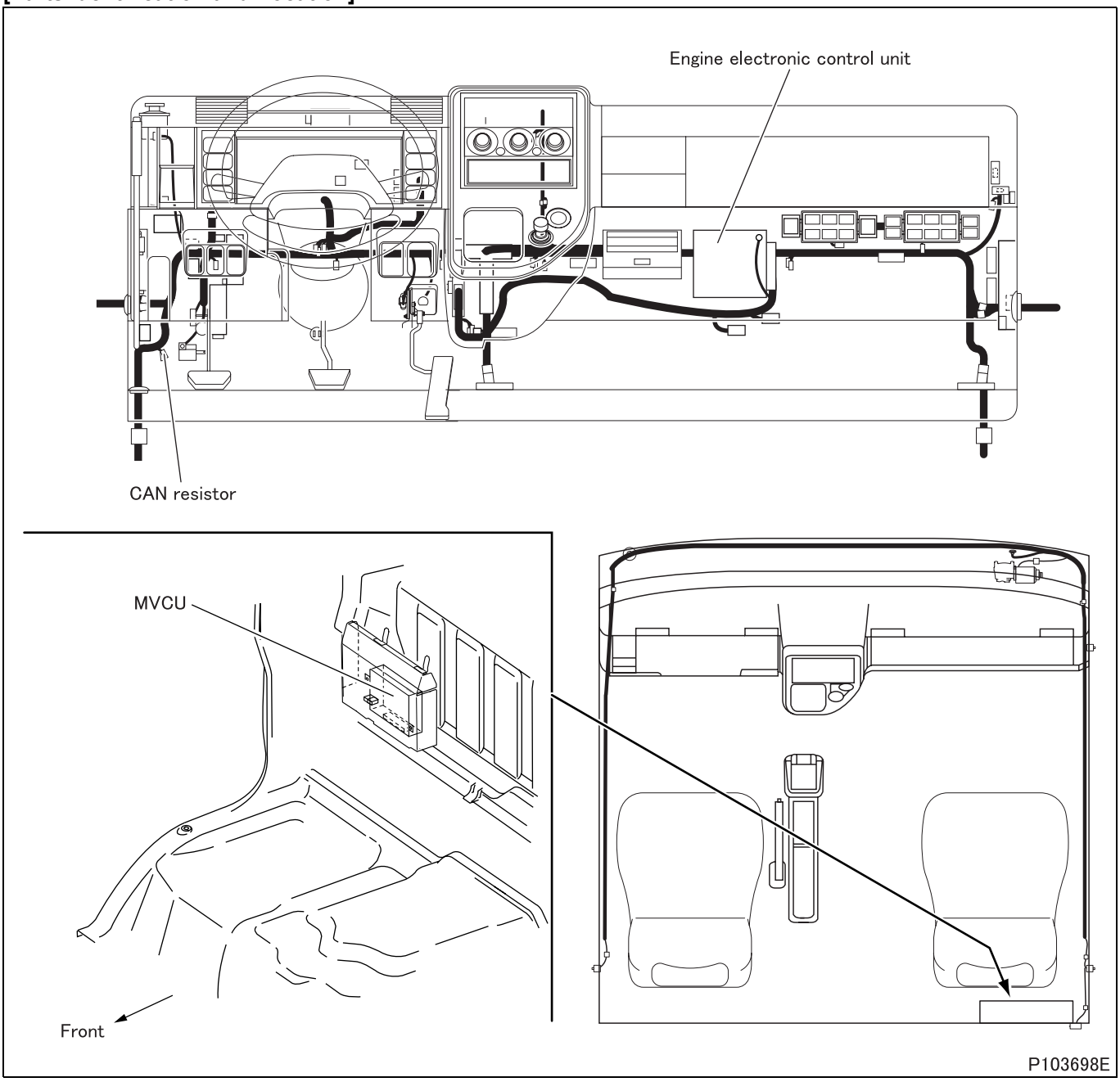

[Fault diagnosis]

- Perform checks in the sequence of the following steps.

Step 1	Inspection items		Inspection by electronic control unit connector
	Maintenance item		Measure value of resistance between engine electronic control unit connector (GE58A) terminal No. 11 and 12.
	Inspection condition		Disconnect each device from harness and measure from connection side of harness connector.
	Requirements		120 ± 6 Ω
	Inspection result (Is the judging standard satisfied?)	YES	Go to step 7.
		NO	Go to step 2.

Step 2	Inspection items		Inspection of controller area network resistor connector
	Maintenance item		Inspection of connector
	Inspection condition		–
	Requirements		• Connector is properly connected. • No trace of water entry is found. • No corrosion is found in terminal. • Connection to terminal is appropriate.
	Inspection result (Is the judging standard satisfied?)	YES	Go to step 3.
		NO	Modify connector.

Step 3	Inspection items		Inspection of controller area network resistor unit
	Maintenance item		Measure value of resistance between connector terminal No. 1 and 2.
	Inspection condition		Remove connector and measure resistance.
	Requirements		120 ± 6 Ω
	Inspection result (Is the judging standard satisfied?)	YES	Go to step 4.
		NO	Replacement of controller area network resistor

<Step 3 inspection diagram>

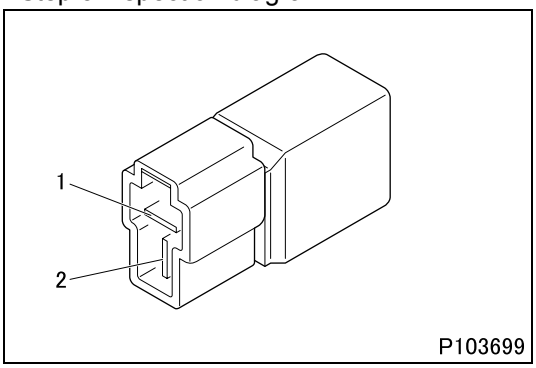

Step 4	Inspection items		Inspection of harness between engine electronic control unit and controller area network resistor (HIGH)
	Maintenance item		Check circuit between controller area network resistor connector terminal No. 1 and engine electronic control unit connector (GE58A) terminal No. 11.
	Inspection condition		Disconnect each device from harness and measure from connection side of harness connector.
	Requirements		There is continuity.
	Inspection result (Is the judging standard satisfied?)	YES	Go to step 5.
		NO	Modify harness.

Step 5	Inspection items		Inspection of harness between engine electronic control unit and controller area network resistor (LOW)
	Maintenance item		Check circuit between controller area network resistor connector terminal No. 2 and engine electronic control unit connector (GE58A) terminal No. 12.
	Inspection condition		Disconnect each device from harness and measure from connection side of harness connector.
	Requirements		There is continuity.
	Inspection result (Is the judging standard satisfied?)	YES	Go to step 6.
		NO	Modify harness.

Step 6	Inspection items		Inspection of electronic control unit connector
	Maintenance item		Inspection of connector
	Inspection condition		–
	Requirements		• Connector is properly connected. • No trace of water entry is found. • No corrosion is found in terminal. • Connection to terminal is appropriate.
	Inspection result (Is the judging standard satisfied?)	YES	Go to step 10.
		NO	Modify connector.

Step 7	Inspection items		Inspection of harness between multifunction vehicle control unit and controller area network resistor (HIGH)
	Maintenance item		Check circuit between controller area network resistor connector terminal No. 1 and multifunction vehicle control unit connector (CY17A) terminal No. 8.
	Inspection condition		Disconnect each device from harness and measure from connection side of harness connector.
	Requirements		There is continuity.
	Inspection result (Is the judging standard satisfied?)	YES	Go to step 8.
		NO	Modify harness.

Step 8	Inspection items		Inspection of harness between multifunction vehicle control unit and controller area network resistor (LOW)
	Maintenance item		Check circuit between controller area network resistor connector terminal No. 2 and multifunction vehicle control unit connector (CY17A) terminal No. 7.
	Inspection condition		Disconnect each device from harness and measure from connection side of harness connector.
	Requirements		There is continuity.
	Inspection result (Is the judging standard satisfied?)	YES	Go to step 9.
		NO	Modify harness.

Step 9	Inspection items		Inspection of multifunction vehicle control unit connector
	Maintenance item		Inspection of connector
	Inspection condition		–
	Requirements		• Connector is properly connected. • No trace of water entry is found. • No corrosion is found in terminal. • Connection to terminal is appropriate.
	Inspection result (Is the judging standard satisfied?)	YES	Replace the engine electronic control unit as well if this diagnosis code occurs after the replacement of multifunction vehicle control unit.
		NO	Modify connector.

[Fault code]
Diagnosis code: P0605/Flash code: 33
[Monitor]
Failure inside engine electronic control unit
[Fault (outline)]
Electronic control unit
[Diagnosis check]
- Program involving data processing function in engine electronic control unit is monitored for abnormality.

[Code generation condition]
- Abnormality occurred during access to EEPOM (write device in electronic control unit).
  (Warning lamp is lit and diagnosis code is displayed on first establishment of code generation condition.)

[Diagnosis check timing]
- Fault diagnosis is continuously performed during the driving cycle.

[Diagnostic requirement]
–

[Control effected by electronic control unit during fault]
- Effects no special control.

[Probable cause of trouble]
- Malfunction of electronic control unit (replacement of electronic control unit)

[Recoverability]
- Recovered if signal becomes normal with starter switch in ON position, or no recovery is made unless the diagnosis code is erased.
  (Warning lamp is extinguished and diagnosis code is cleared simultaneously with recovery.)

[Fault code]
Diagnosis code: P0607/Flash code: 33
[Monitor]
Failure inside engine electronic control unit
[Fault (outline)]
Injector driver circuit
[Diagnosis check]
- Program involving injector drive circuit in engine electronic control unit is monitored for abnormality.

[Code generation condition]
Diagnosis code is generated under either of the following conditions.
(Warning lamp is lit and diagnosis code is displayed on third establishment of code generation condition.)
- Internal reset
- Initialization error
- Sum check error
- Program flow error
- Signal timeout error

[Diagnosis check timing]
- Fault diagnosis is performed each time when the starter switch is turned from “stop” to “start” position.
- Fault diagnosis is continuously performed during the driving cycle.

[Diagnostic requirement]
–

[Control effected by electronic control unit during fault]
- Engine stopped

[Probable cause of trouble]
- Malfunction of electronic control unit (replacement of electronic control unit)

[Recoverability]
- When output signal returns to normal with the starter switch set to ON from OFF (power supply to the electronic control unit resumed), a reset is made.
  (Timing of warning lamp/diagnosis code OFF depends on condition.)

<Condition (1)>
- Code is cleared simultaneously with recovery.

<Condition (2)>
- Lamp is extinguished and code is cleared simultaneously with recovery.

<Condition (3)>
- Lamp is extinguished and code is cleared at fourth diagnosis code display after recovery.

[Fault code]
Diagnosis code: P060B/Flash code: 33
[Monitor]
Failure inside engine electronic control unit
[Fault (outline)]
A/D Converter fault
[Diagnosis check]
- Analog-to-digital signal conversion circuit in engine electronic control unit is monitored for abnormality.

[Code generation condition]
- Circuit remains abnormal as detected for 0.15 second.
  (Warning lamp is lit and diagnosis code is displayed on first establishment of code generation condition.)

[Diagnosis check timing]
- Fault diagnosis is continuously performed during the driving cycle.

[Diagnostic requirement]
–

[Control effected by electronic control unit during fault]
- Engine stopped

[Probable cause of trouble]
- Malfunction of electronic control unit (replacement of electronic control unit)

[Recoverability]
- Recovered if signal becomes normal when starter switch is turned OFF to ON (power supply resumed to electronic control unit).
  (Warning lamp is extinguished and diagnosis code is cleared at fourth display of diagnosis code after recovery.)

[Fault code]
Diagnosis code: P0611/Flash code: 47
[Monitor]
Injector adjustment data
[Fault (outline)]
Electronic control unit
[Diagnosis check]
- Availability of stored injector adjustment data in engine electronic control unit is monitored.

[Code generation condition]
- Injector adjustment data are found missing.
  (Warning lamp is lit and diagnosis code is displayed on first establishment of code generation condition.)

[Diagnosis check timing]
- Fault diagnosis is continuously performed during the driving cycle.

[Diagnostic requirement]
–

[Control effected by electronic control unit during fault]
- Engine stopped

[Probable cause of trouble]
- No injection correction data stored in engine electronic control unit
  (For data alteration/registration and data write operation, contact your nearest MITSUBISHI FUSO dealer or MITSUBISHI FUSO TRUCK OF AMERICA, Inc.)

[Recoverability]
- Recovered if signal becomes normal when starter switch is turned OFF to ON (power supply resumed to electronic control unit).
  (Warning lamp is extinguished and diagnosis code is cleared simultaneously with recovery.)

[Fault code]
Diagnosis code: P0615/Flash code: 48
[Monitor]
Failure of safety relay
[Fault (outline)]
Overload
[Diagnosis check]
- Engine electronic control unit internal function monitors safety relay circuit for overcurrent.

[Code generation condition]
- Overcurrent remains as detected by engine electronic control unit internal function for 3 seconds.
  (Warning lamp is lit and diagnosis code is displayed on first establishment of code generation condition.)

[Diagnosis check timing]
- Fault diagnosis is performed each time when the control is initiated.

[Diagnostic requirement]
–

[Control effected by electronic control unit during fault]
- Effects no special control.

[Probable cause of trouble]
- Short-circuited harness between electronic control unit and safety relay
- Malfunction of each connector
- Malfunction of safety relay
- Malfunction of electronic control unit

[Recoverability]
- Recovered if signal becomes normal when starter switch is turned OFF to ON (power supply resumed to electronic control unit).
  (Warning lamp is extinguished and diagnosis code is cleared simultaneously with recovery.)

[Electronic Control Unit Connection Diagram]

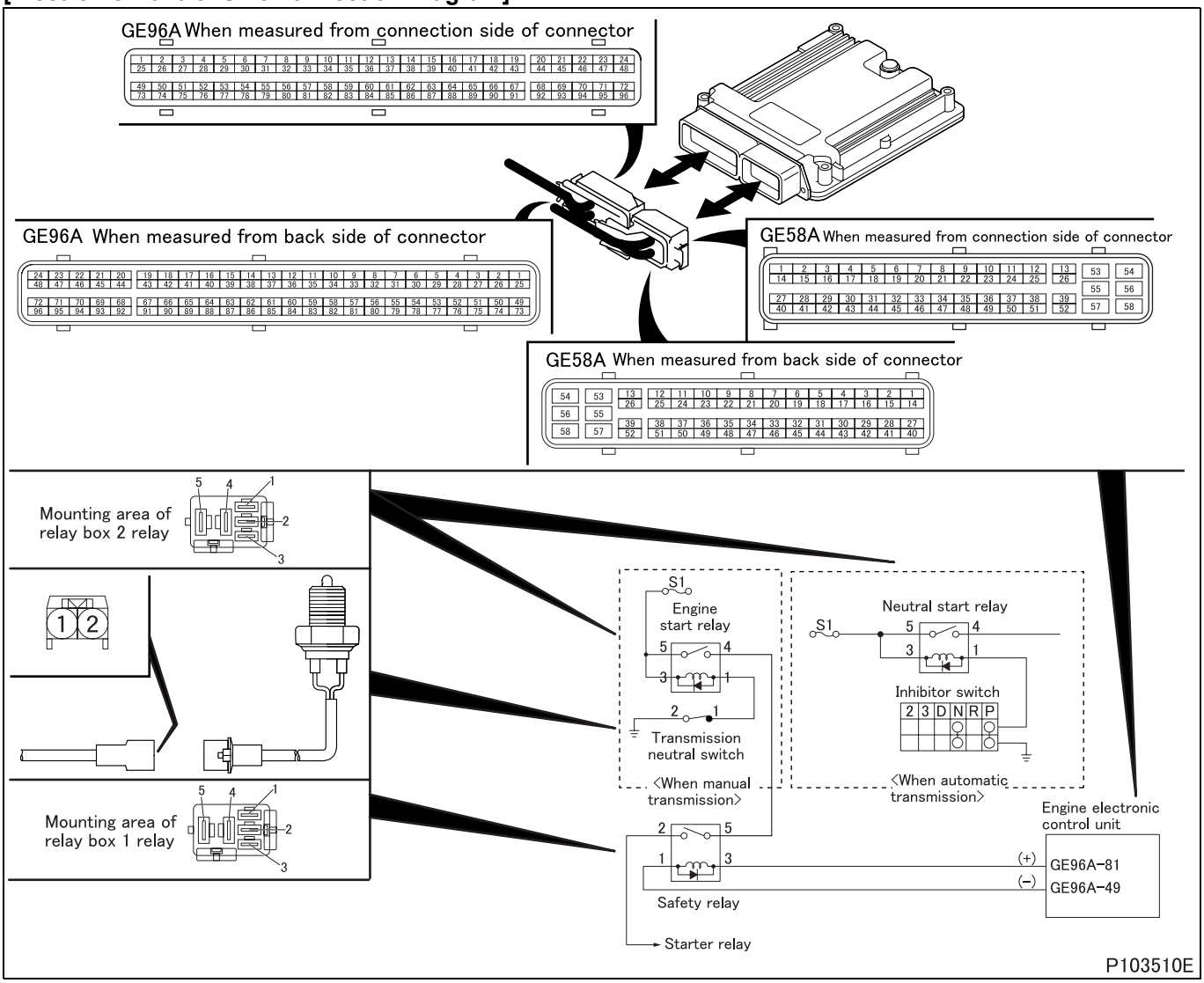

[Parts Identification and Location]

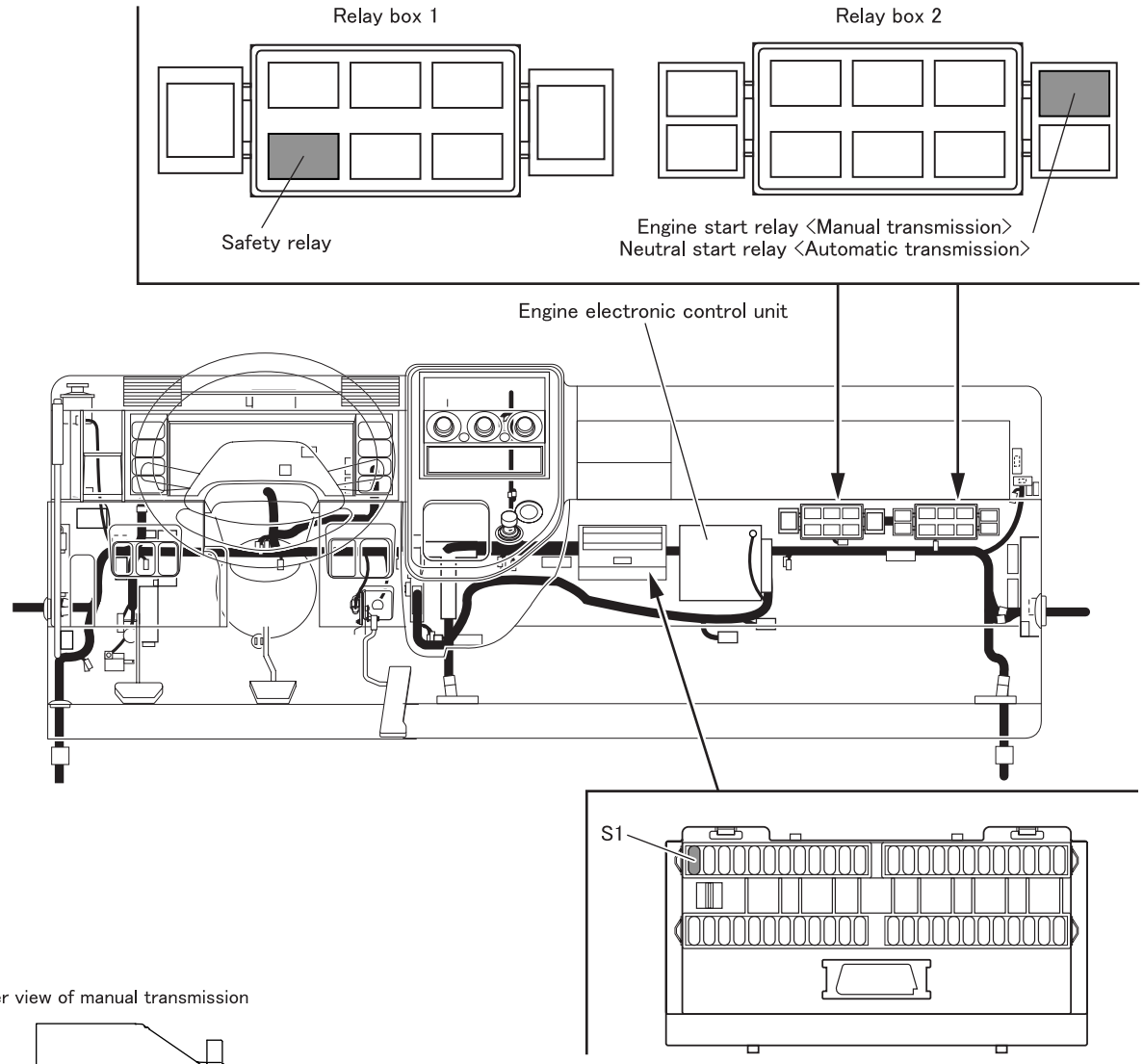

Upper view of manual transmission

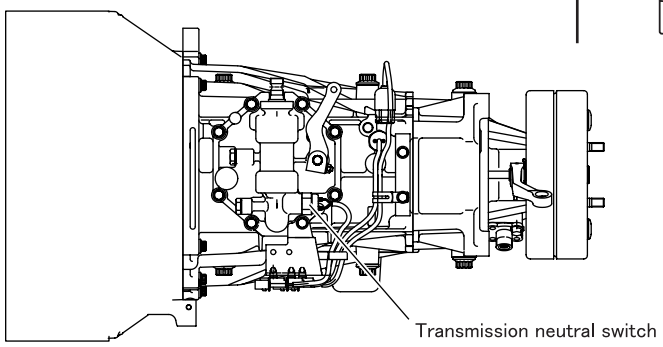

Left view of automatic transmission

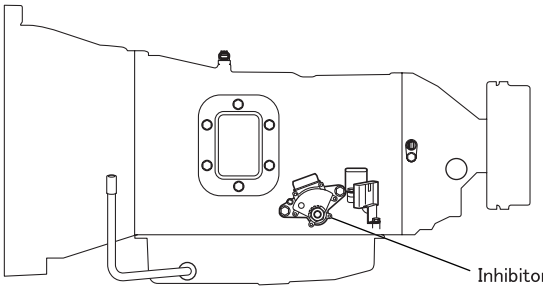

P103636E

[Fault diagnosis]

- Perform checks in the sequence of the following steps.

Step 1	Inspection items		Inspection by electronic control unit connector
	Maintenance item		Check circuit between connector (GE96A) terminal No. 81 (+) and No. 49 (–).
	Inspection condition		Measure from back side of connector of harness with each device connected to harness.
	Requirements		There is continuity.
	Inspection result (Is the judging standard satisfied?)	YES	Go to step 2.
		NO	Go to step 3.

Step 2	Inspection items		Inspection of electronic control unit connector
	Maintenance item		Inspection of connector
	Inspection condition		–
	Requirements		• Connector is properly connected. • No trace of water entry is found. • No corrosion is found in terminal. • Connection to terminal is appropriate.
	Inspection result (Is the judging standard satisfied?)	YES	Go to step 7.
		NO	Modify connector.

Step 3	Inspection items		Inspection of relay connector
	Maintenance item		Inspection of connector
	Inspection condition		–
	Requirements		• Connector is properly connected. • No trace of water entry is found. • No corrosion is found in terminal. • Connection to terminal is appropriate.
	Inspection result (Is the judging standard satisfied?)	YES	Go to step 4.
		NO	Modify connector.

Step 4	Inspection items		Inspection of relay unit
	Maintenance item		Measure continuity between terminals No. 2 and 5 when relay operates.
	Inspection condition		Apply battery voltage across connector terminals No. 3 (+) and 1 (–)
	Requirements		There is no continuity.
	Inspection result (Is the judging standard satisfied?)	YES	Go to step 5.
		NO	Replacement of relay

<Step 4 inspection diagram>

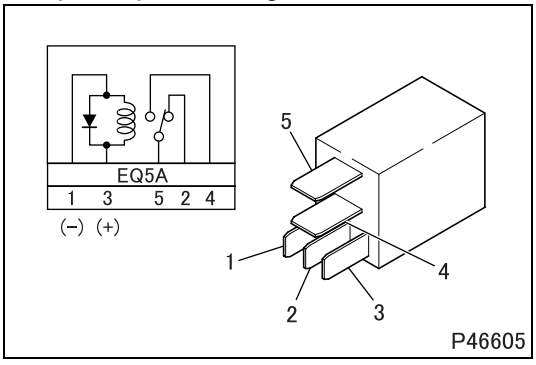

Step 5	Inspection items		Inspection of harness between relay and electronic control unit (power supply)
	Maintenance item		Check circuit between relay connector terminal No. 3 and electronic control unit connector (GE96A) terminal No. 81.
	Inspection condition		Disconnect each device from harness and measure from connection side of harness connector.
	Requirements		There is continuity.
	Inspection result (Is the judging standard satisfied?)	YES	Go to step 6.
		NO	Modify harness.

Step 6	Inspection items		Inspection of harness between relay and electronic control unit (ground)
	Maintenance item		Check circuit between relay connector terminal No. 1 and electronic control unit connector (GE96A) terminal No. 49.
	Inspection condition		Disconnect each device from harness and measure from connection side of harness connector.
	Requirements		There is continuity.
	Inspection result (Is the judging standard satisfied?)	YES	Go to step 7.
		NO	Modify harness.

Step 7	Inspection items		Inspection by control data
	Maintenance item		Perform actuator test item No. AE “Starter Safety Relay”
	Inspection condition		–
	Requirements		This diagnosis code is not displayed again.
	Inspection result (Is the judging standard satisfied?)	YES	Go to transient fault (See Gr00.).
		NO	Replacement of electronic control unit

[Fault code]
Diagnosis code: P0616/Flash code: 48
[Monitor]
Failure of safety relay
[Fault (outline)]
- Short circuit ground
- Open circuit

[Diagnosis check]
- Engine electronic control unit internal function monitors safety relay for short or open circuit to ground.

[Code generation condition]
- Safety relay circuit remains short or open circuited to ground as detected by engine electronic control unit internal function for 3 seconds.
  (Warning lamp is lit and diagnosis code is displayed on first establishment of code generation condition.)

[Diagnosis check timing]
- Fault diagnosis is performed each time when the control is halted.

[Diagnostic requirement]
–

[Control effected by electronic control unit during fault]
- Effects no special control.

[Probable cause of trouble]
- Open-circuit or short-circuit of harness between electronic control unit and safety relay
- Malfunction of each connector
- Malfunction of safety relay
- Malfunction of electronic control unit

[Recoverability]
- Recovered if signal becomes normal when starter switch is turned OFF to ON (power supply resumed to electronic control unit).
  (Warning lamp is extinguished and diagnosis code is cleared simultaneously with recovery.)

[Electronic Control Unit Connection Diagram]

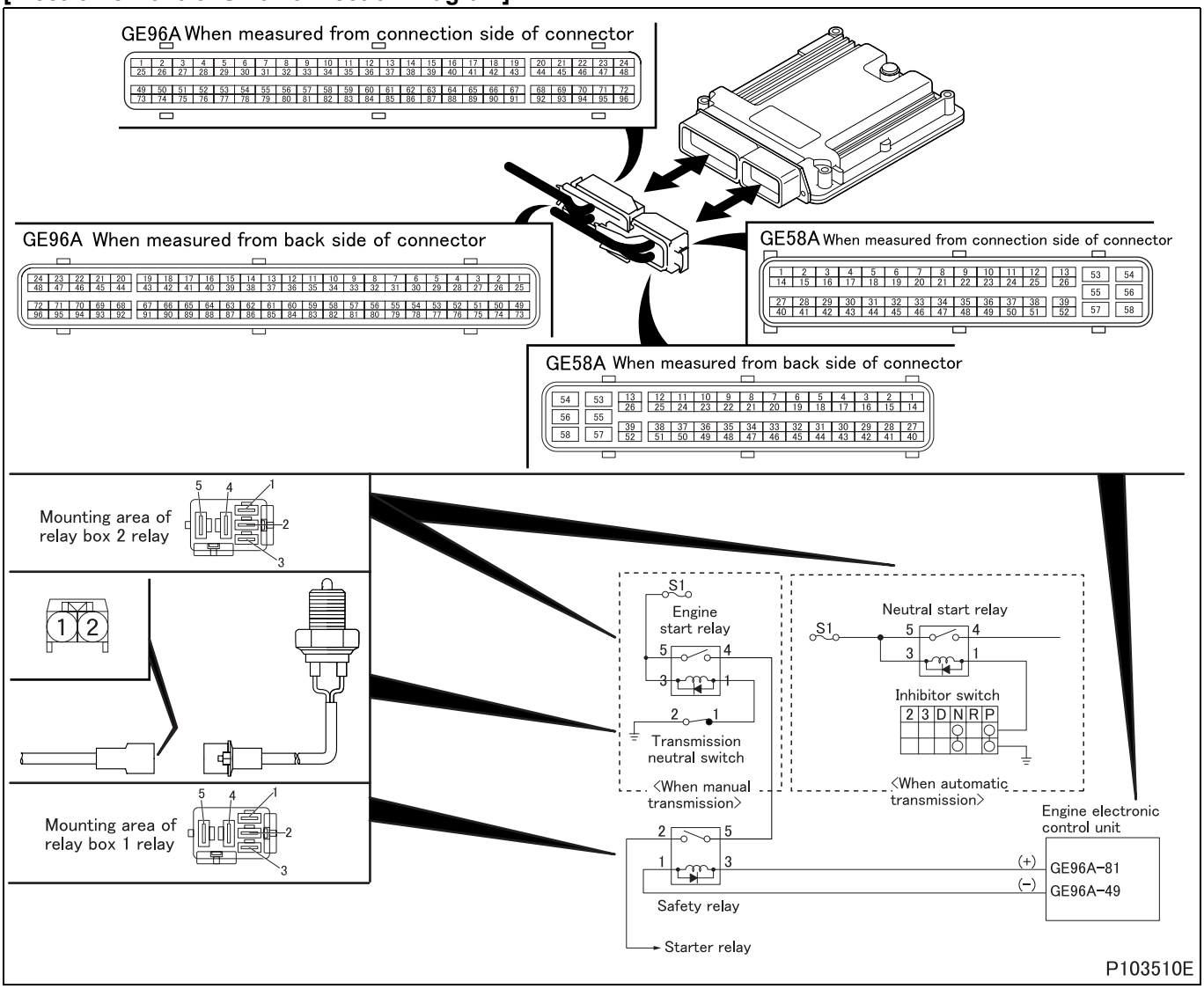

[Parts Identification and Location]

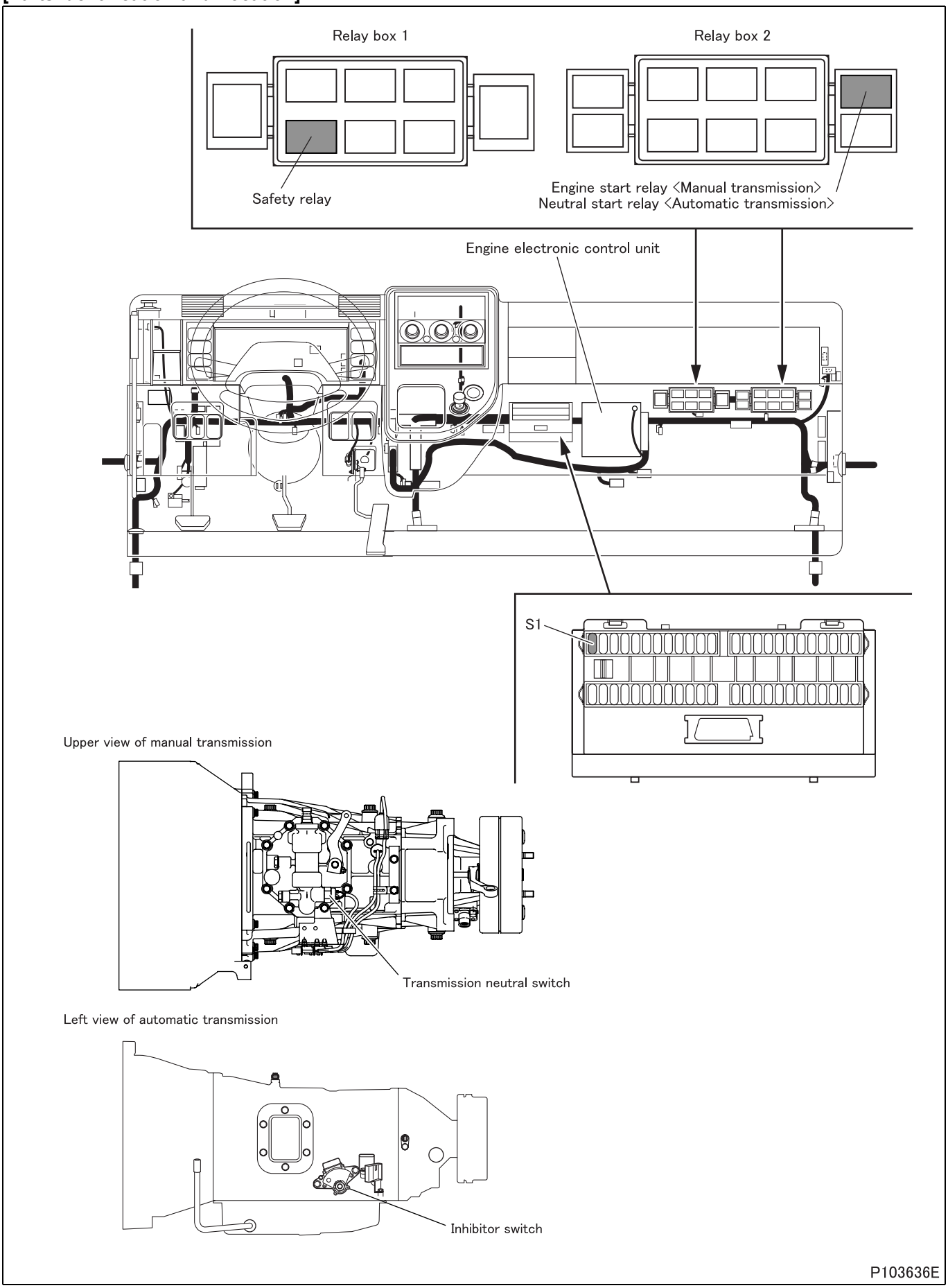

[Fault diagnosis]

- Perform checks in the sequence of the following steps.

Step 1	Inspection items		Inspection by control data
	Maintenance item		Perform actuator test item No. AE “Starter Safety Relay”
	Inspection condition		–
	Requirements		Relay operation sound is noted (automatic reset after six seconds).
	Inspection result (Is the judging standard satisfied?)	YES	Go to transient fault (See Gr00.).
		NO	Go to step 2.

Step 2	Inspection items		Inspection by electronic control unit connector (power supply)
	Maintenance item		Measure value of voltage between connector (GE96A) terminal No. 81 (+) and 49 (–).
	Inspection condition		• Measure from back side of connector of harness with each device connected to harness. • Perform actuator test item No. AE “Starter Safety Relay”
	Requirements		Same as battery voltage (automatic reset after six seconds)
	Inspection result (Is the judging standard satisfied?)	YES	Go to step 4.
		NO	Go to step 3.

Step 3	Inspection items		Inspection of electronic control unit connector
	Maintenance item		Inspection of connector
	Inspection condition		–
	Requirements		• Connector is properly connected. • No trace of water entry is found. • No corrosion is found in terminal. • Connection to terminal is appropriate.
	Inspection result (Is the judging standard satisfied?)	YES	Go to step 8.
		NO	Modify connector.

Step 4	Inspection items		Inspection of relay connector
	Maintenance item		Inspection of connector
	Inspection condition		–
	Requirements		• Connector is properly connected. • No trace of water entry is found. • No corrosion is found in terminal. • Connection to terminal is appropriate.
	Inspection result (Is the judging standard satisfied?)	YES	Go to step 5.
		NO	Modify connector.

Step 5	Inspection items		Inspection of relay unit
	Maintenance item		Measure continuity between terminals No. 2 and 5 when relay operates.
	Inspection condition		Apply battery voltage across connector terminals No. 3 (+) and 1 (–)
	Requirements		There is no continuity.
	Inspection result (Is the judging standard satisfied?)	YES	Go to step 6.
		NO	Replacement of relay

<Step 5 inspection diagram>

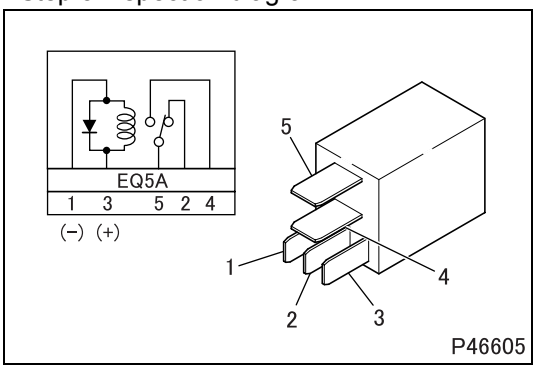

Step 6	Inspection items		Inspection of harness between relay and electronic control unit (power supply)
	Maintenance item		Check circuit between relay connector terminal No. 3 and electronic control unit connector (GE96A) terminal No. 81.
	Inspection condition		Disconnect each device from harness and measure from connection side of harness connector.
	Requirements		There is continuity.
	Inspection result (Is the judging standard satisfied?)	YES	Go to step 6.
		NO	Modify harness.

Step 7	Inspection items		Inspection of harness between relay and electronic control unit (ground)
	Maintenance item		Check circuit between relay connector terminal No. 1 and electronic control unit connector (GE96A) terminal No. 49.
	Inspection condition		Disconnect each device from harness and measure from connection side of harness connector.
	Requirements		There is continuity.
	Inspection result (Is the judging standard satisfied?)	YES	Go to step 8.
		NO	Modify harness.

Step 8	Inspection items		Inspection by control data
	Maintenance item		Perform actuator test item No. AE “Starter Safety Relay”
	Inspection condition		–
	Requirements		Relay operation sound is noted (automatic reset after six seconds).
	Inspection result (Is the judging standard satisfied?)	YES	Go to transient fault (See Gr00.).
		NO	Replacement of electronic control unit

[Fault code]
Diagnosis code: P0617/Flash code: 48
[Monitor]
Failure of safety relay
[Fault (outline)]
Short circuit battery
[Diagnosis check]
- Engine electronic control unit internal function monitors safety relay for short circuit to power supply.

[Code generation condition]
- Safety relay circuit remains shorted to power supply as detected by engine electronic control unit internal function for 3 seconds.
  (Warning lamp is lit and diagnosis code is displayed on first establishment of code generation condition.)

[Diagnosis check timing]
- Fault diagnosis is performed each time when the control is initiated.

[Diagnostic requirement]
–

[Control effected by electronic control unit during fault]
- Effects no special control.

[Probable cause of trouble]
- Open-circuit or short-circuit of harness between electronic control unit and relay
- Malfunction of each connector
- Malfunction of safety relay
- Malfunction of electronic control unit

[Recoverability]
- Recovered if signal becomes normal when starter switch is turned OFF to ON (power supply resumed to electronic control unit).
  (Warning lamp is extinguished and diagnosis code is cleared simultaneously with recovery.)

[Electronic Control Unit Connection Diagram]

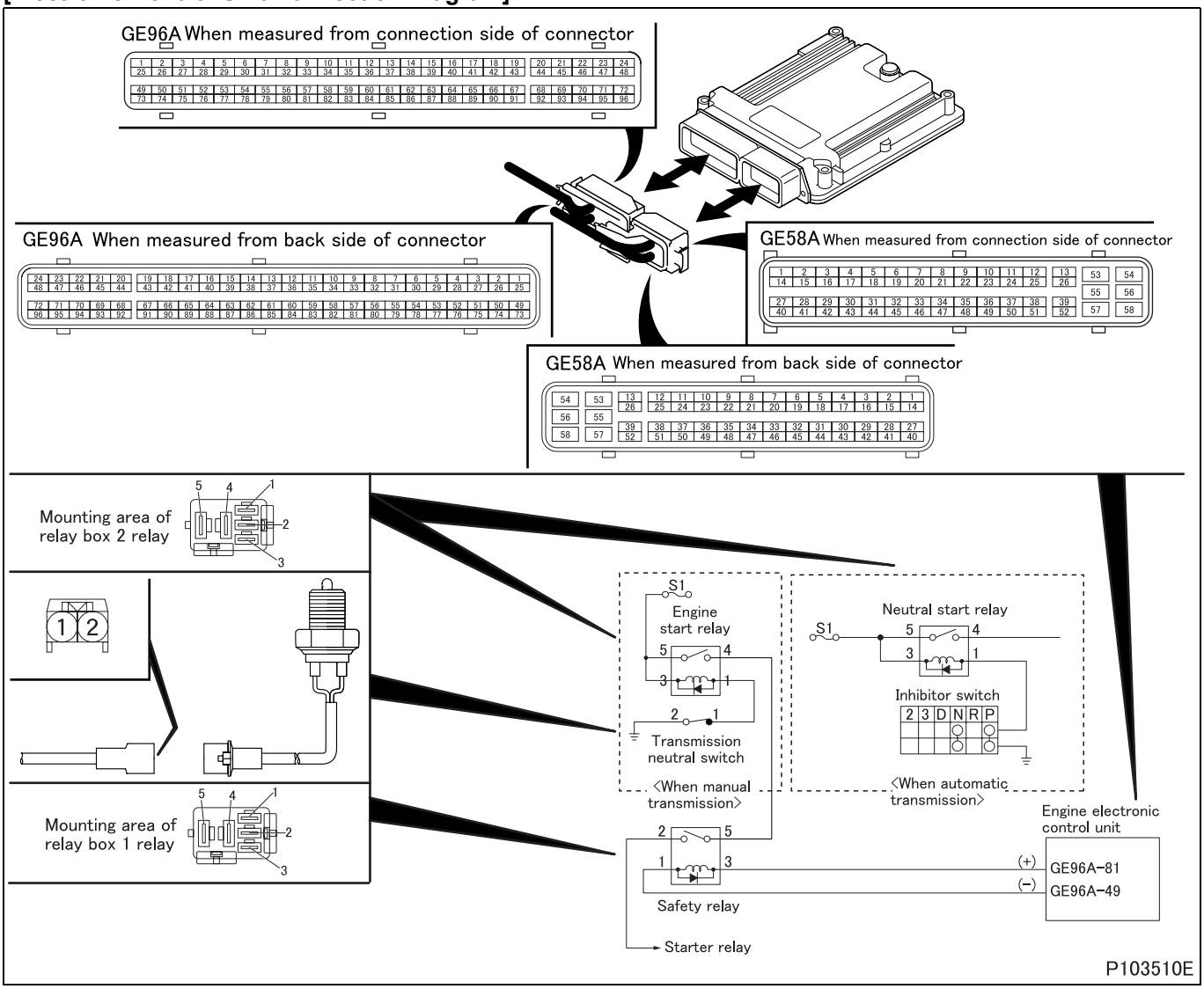

[Parts Identification and Location]

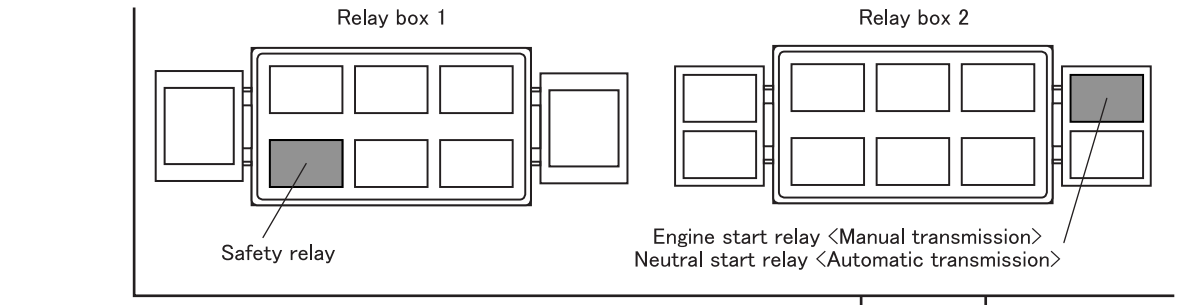

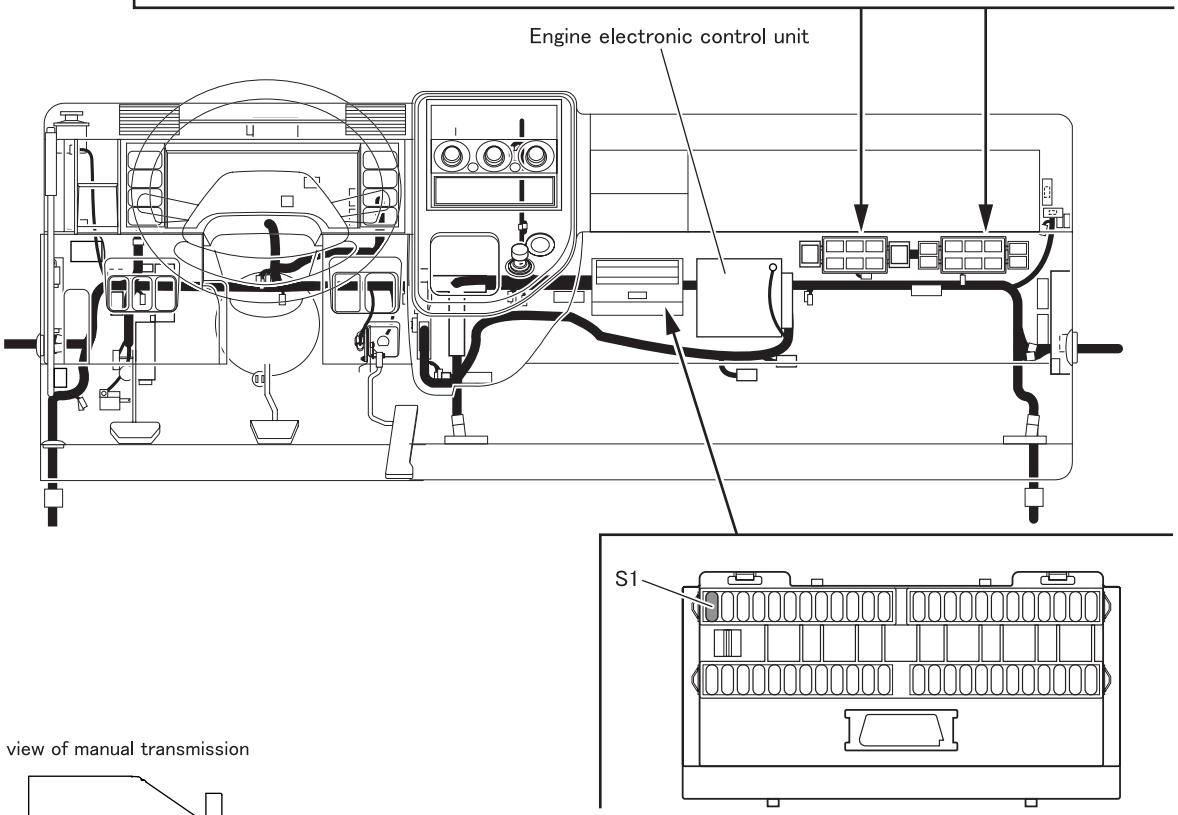

Upper view of manual transmission

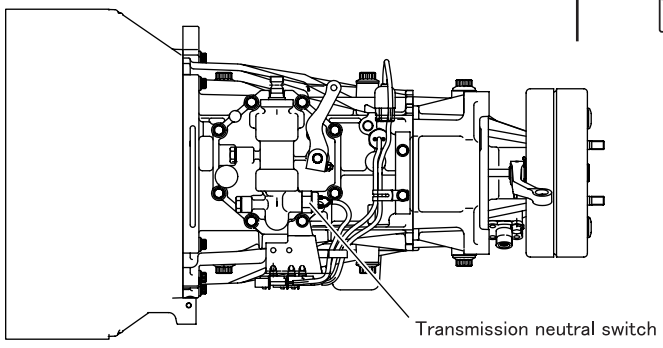

Left view of automatic transmission

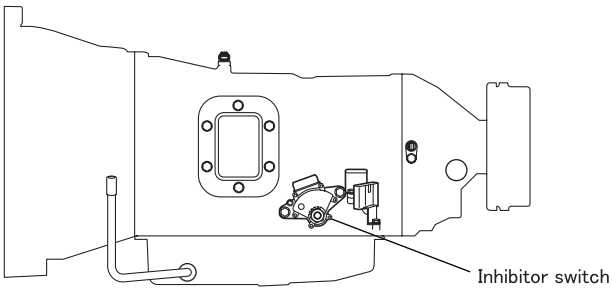

P103636E

[Fault diagnosis]

- Perform checks in the sequence of the following steps.

Step 1	Inspection items		Inspection by electronic control unit connector
	Maintenance item		Measure value of resistance between connector (GE96A) terminal No. 49 and 81.
	Inspection condition		–
	Requirements		343 Ω or more
	Inspection result (Is the judging standard satisfied?)	YES	Go to step 8.
		NO	Go to step 2.

Step 2	Inspection items		Inspection of electronic control unit connector
	Maintenance item		Inspection of connector
	Inspection condition		–
	Requirements		• Connector is properly connected. • No trace of water entry is found. • No corrosion is found in terminal. • Connection to terminal is appropriate.
	Inspection result (Is the judging standard satisfied?)	YES	Go to step 3.
		NO	Modify connector.

Step 3	Inspection items		Inspection of relay connector
	Maintenance item		Inspection of connector
	Inspection condition		–
	Requirements		• Connector is properly connected. • No trace of water entry is found. • No corrosion is found in terminal. • Connection to terminal is appropriate.
	Inspection result (Is the judging standard satisfied?)	YES	Go to step 4.
		NO	Modify connector.

Step 4	Inspection items		Inspection of relay unit
	Maintenance item		Measure continuity between terminals No. 2 and 5 when relay operates.
	Inspection condition		Apply battery voltage across connector terminals No. 3 (+) and 1 (–).
	Requirements		There is no continuity.
	Inspection result (Is the judging standard satisfied?)	YES	Go to step 5.
		NO	Replacement of relay

<Step 4 inspection diagram>

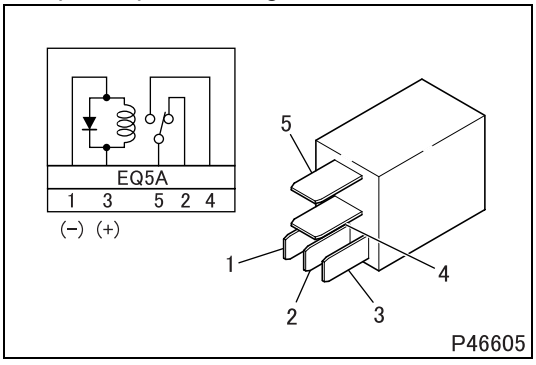

Step 5	Inspection items		Inspection of harness between relay and electronic control unit (power supply)
	Maintenance item		Check circuit between relay connector terminal No. 3 and electronic control unit connector (GE96A) terminal No. 81
	Inspection condition		Disconnect each device from harness and measure from connection side of harness connector.
	Requirements		There is continuity.
	Inspection result (Is the judging standard satisfied?)	YES	Go to step 6.
		NO	Modify harness.

Step 6	Inspection items		Inspection of harness between relay and electronic control unit (power supply)
	Maintenance item		Check circuit between relay connector terminal No. 3 and cab ground
	Inspection condition		Disconnect each device from harness and measure from connection side of harness connector.
	Requirements		There is no continuity.
	Inspection result (Is the judging standard satisfied?)	YES	Go to step 7.
		NO	Modify harness.

Step 7	Inspection items		Inspection of harness between relay and electronic control unit (ground)
	Maintenance item		Check circuit between relay connector terminal No. 1 and electronic control unit connector (GE96A) terminal No. 49
	Inspection condition		Disconnect each device from harness and measure from connection side of harness connector.
	Requirements		There is continuity.
	Inspection result (Is the judging standard satisfied?)	YES	Go to step 8.
		NO	Modify harness.

Step 8	Inspection items		Inspection by control data
	Maintenance item		Perform actuator test item No. AE “Starter Safety Relay”
	Inspection condition		–
	Requirements		Relay operation sound is noted (automatic reset after six seconds).
	Inspection result (Is the judging standard satisfied?)	YES	Go to transient fault (See Gr00.).
		NO	Replacement of electronic control unit

[Fault code]
Diagnosis code: P061B/Flash code: 33
[Monitor]
Failure inside engine electronic control unit
[Fault (outline)]
Plausibility
[Diagnosis check]
- Injecting quantity computing function in engine electronic control unit is monitored.

[Code generation condition]
- Abnormal condition has occurred in injection quantity arithmetic processing inside engine electronic control unit. (Warning lamp is lit and diagnosis code is displayed on first establishment of code generation condition.)

[Diagnosis check timing]
- Fault diagnosis is continuously performed during the driving cycle.

[Diagnostic requirement]
–

[Control effected by electronic control unit during fault]
- Effects no special control.

[Probable cause of trouble]
- Malfunction of electronic control unit (replacement of electronic control unit)

[Recoverability]
- Recovered if signal becomes normal with starter switch in ON position.
  (Warning lamp is extinguished and diagnosis code is cleared simultaneously with recovery.)

[Fault code]
Diagnosis code: P061C/Flash code: 33
[Monitor]
Failure inside engine electronic control unit
[Fault (outline)]
Plausibility
[Diagnosis check]
- Engine speed computing function in engine electronic control unit is monitored.

[Code generation condition]
- Abnormal condition has occurred in engine speed processing inside engine electronic control unit. (Warning lamp is lit and diagnosis code is displayed on first establishment of code generation condition.)

[Diagnosis check timing]
- Fault diagnosis is continuously performed during the driving cycle.

[Diagnostic requirement]
–

[Control effected by electronic control unit during fault]
- Effects no special control.

[Probable cause of trouble]
- Malfunction of electronic control unit (replacement of electronic control unit)

[Recoverability]
- Recovered if signal becomes normal with starter switch in ON position.
  (Warning lamp is extinguished and diagnosis code is cleared simultaneously with recovery.)

[Fault code]
Diagnosis code: P062D/Flash code: 82
[Monitor]
Failure of injector circuit inside engine electronic control unit
[Fault (outline)]
Injector driver circuit (No. 1 and 3 cylinders)
[Diagnosis check]
- Failure of injector circuit inside engine electronic control unit

[Code generation condition]
- Injector (No. 1, No. 3 cylinder) power supply voltage in engine electronic control unit remains over 61.8 V or below 43.2 V for 3 consecutive cycles (Warning lamp is lit and diagnosis code is displayed on first establishment of code generation condition).

[Diagnosis check timing]
- Fault diagnosis is continuously performed during the driving cycle.

[Diagnostic requirement]
–

[Control effected by electronic control unit during fault]
- Injector magnetic valve (No. 1 and No. 4 cylinder) is stopped.
- Exhaust gas recirculation control is stopped.
- Throttle controls disabled
- Misfire detection is stopped.
- Auto cruise control stopped
- Diesel particulate filter regeneration is stopped.
- Injector actuator test is inhibited.
- Turbocharger actuator test is inhibited.
- Related fault check is stopped.

[Probable cause of trouble]
- Open-circuit or short-circuit of harness between electronic control unit and injector magnetic valves
- Malfunction of each connector
- Malfunction of injector magnetic valves
- Malfunction of electronic control unit

[Recoverability]
- Recovered if signal becomes normal when starter switch is turned OFF to ON (power supply resumed to electronic control unit).
  (Warning lamp is extinguished and diagnosis code is cleared at fourth display of diagnosis code after recovery.)

[Electronic Control Unit Connection Diagram]

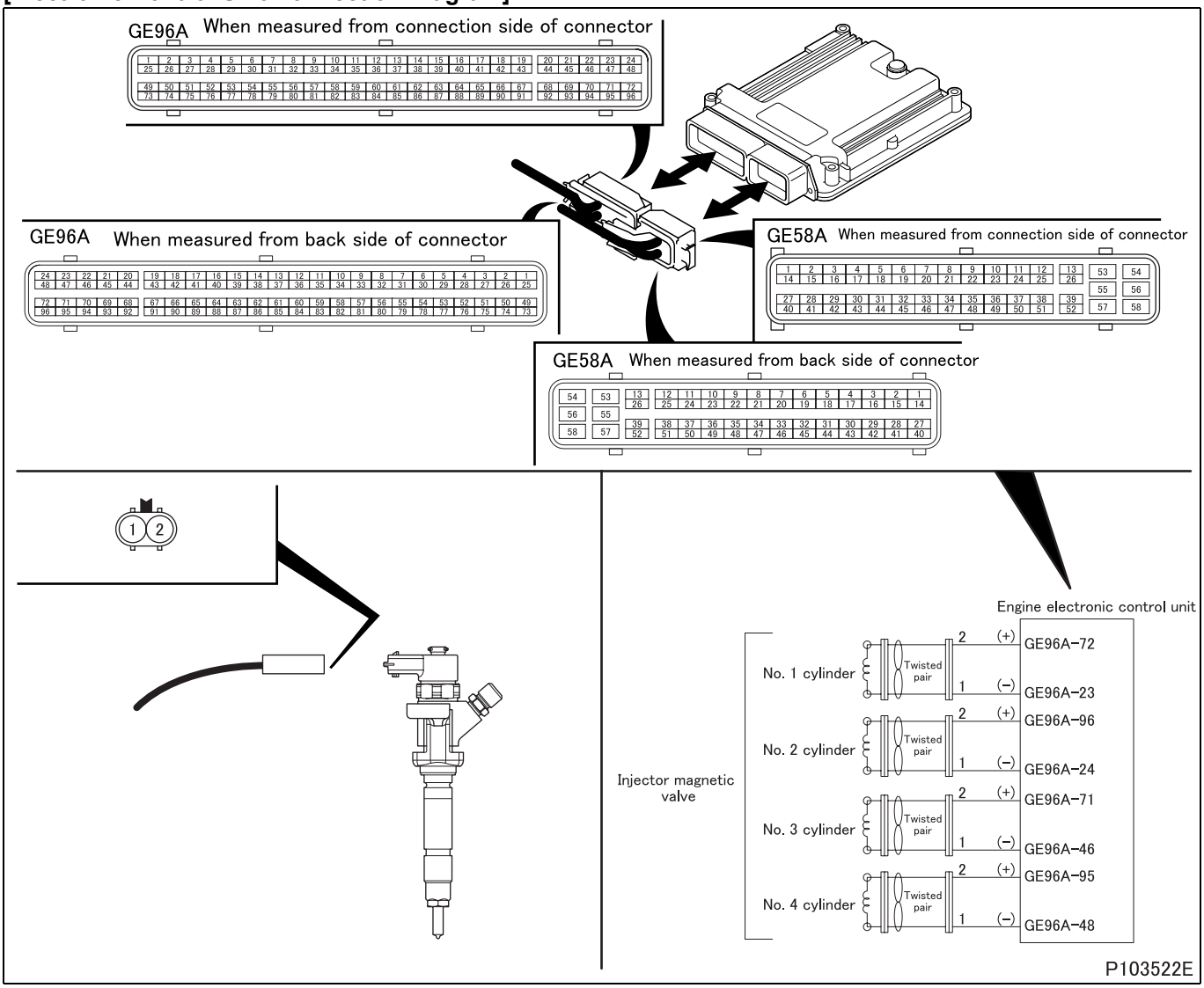

[Parts Identification and Location]

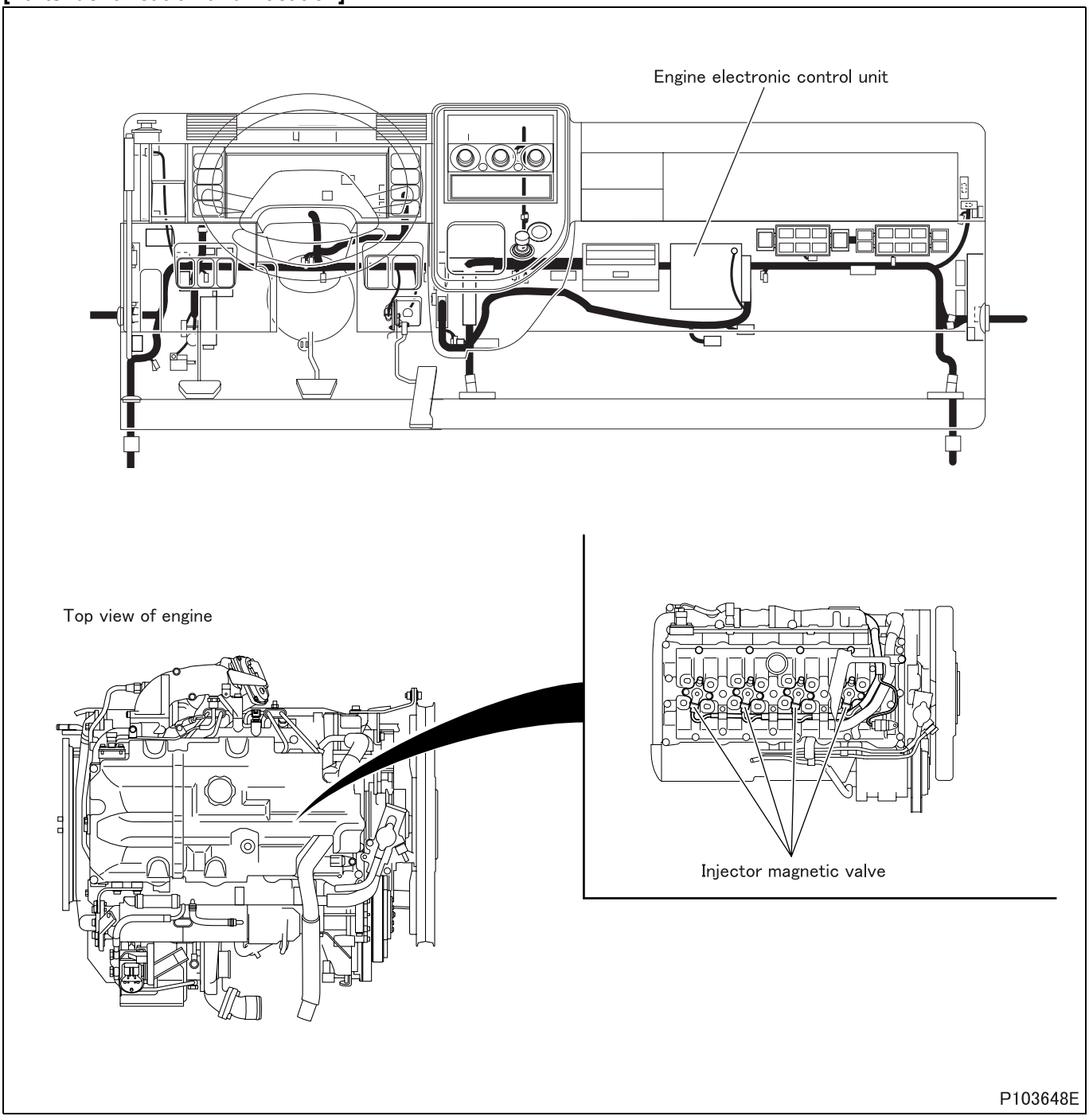

[Fault diagnosis]

- Perform checks in the sequence of the following steps.

Step 1	Inspection items		Inspection by control data
	Maintenance item		Perform the following actuator tests. • Injector magnetic valve (No. 1 cylinder): Perform item No. BB “Injector Test 1”. • Injector magnetic valve (No. 3 cylinder): Perform item No. BE “Injector Test 4”.
	Inspection condition		• Vehicle: stationary (vehicle speed 0 km/h {0 MPH}) • Engine speed: 1500 rpm or less • Transmission: neutral • The current diagnosis code does not occur.
	Requirements		Injector (No. 1 cylinder) or Injector (No. 3 cylinder) stops injection and engine vibrations become slightly larger.
	Inspection result (Is the judging standard satisfied?)	YES	Go to transient fault (See Gr00.).
		NO	Go to step 2.

Step 2	Inspection items		Inspection by electronic control unit connector
	Maintenance item		Measure value of resistance between following connector (GE96A) terminals. • Injector magnetic valve (No. 1 cylinder): 72 (+) and 23 (–) • Injector magnetic valve (No. 3 cylinder): 71 (+) and 46 (–)
	Inspection condition		Disconnect electronic control unit from harness and measure from connection side of harness connector.
	Requirements		0.255 ± 0.04 Ω (20°C {68°F})
	Inspection result (Is the judging standard satisfied?)	YES	Go to step 3.
		NO	Go to step 4.

Step 3	Inspection items		Inspection of electronic control unit connector
	Maintenance item		Inspection of connector
	Inspection condition		–
	Requirements		• Connector is properly connected. • No trace of water entry is found. • No corrosion is found in terminal. • Connection to terminal is appropriate.
	Inspection result (Is the judging standard satisfied?)	YES	Go to step 8.
		NO	Modify connector.

Step 4	Inspection items		Inspection of injector magnetic valve connector
	Maintenance item		Inspection of connector
	Inspection condition		–
	Requirements		• Connector is properly connected. • Connection to terminal is appropriate.
	Inspection result (Is the judging standard satisfied?)	YES	Go to step 5.
		NO	Modify connector.

Step 5	Inspection items		Inspection of injector magnetic valve unit
	Maintenance item		Measure value of resistance between connector terminal No. 1 and 2.
	Inspection condition		–
	Requirements		0.255 ± 0.04 Ω (20°C {68°F})
	Inspection result (Is the judging standard satisfied?)	YES	Go to step 6.
		NO	Replacement of injector

<Step 5 inspection diagram>

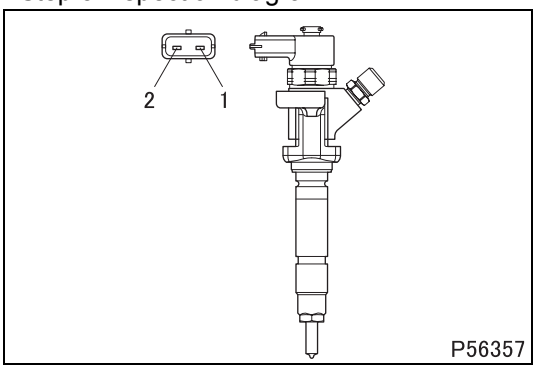

Step 6	Inspection items		Inspection of harness between injector magnetic valve and electronic control unit (power supply)
	Maintenance item		Check circuit between following connector terminals. • Injector magnetic valve (No. 1 cylinder): magnetic valve connector terminal No. 2 and electronic control unit connector (GE96A) terminal No. 72 • Injector magnetic valve (No. 3 cylinder): magnetic valve connector terminal No. 2 and electronic control unit connector (GE96A) terminal No. 71
	Inspection condition		Disconnect each device from harness and measure from connection side of harness connector.
	Requirements		There is continuity.
	Inspection result (Is the judging standard satisfied?)	YES	Go to step 7.
		NO	Modify harness.

Step 7	Inspection items		Inspection of harness between injector magnetic valve and electronic control unit (ground)
	Maintenance item		Check circuit between following connector terminals. • Injector magnetic valve (No. 1 cylinder): magnetic valve connector terminal No. 1 and electronic control unit connector (GE96A) terminal No. 23 • Injector magnetic valve (No. 3 cylinder): magnetic valve connector terminal No. 1 and electronic control unit connector (GE96A) terminal No. 46
	Inspection condition		Disconnect each device from harness and measure from connection side of harness connector.
	Requirements		There is continuity.
	Inspection result (Is the judging standard satisfied?)	YES	Go to step 8.
		NO	Modify harness.

Step 8	Inspection items		Inspection by control data
	Maintenance item		Perform the following actuator tests. • Injector magnetic valve (No. 1 cylinder): Perform item No. BB “Injector Test 1”. • Injector magnetic valve (No. 3 cylinder): Perform item No. BE “Injector Test 4”.
	Inspection condition		• Vehicle: stationary (vehicle speed 0 km/h {0 MPH}) • Engine speed: 1500 rpm or less • Transmission: neutral • The current diagnosis code does not occur.
	Requirements		Injector (No. 1 cylinder) or Injector (No. 3 cylinder) stops injection and engine vibrations become slightly larger.
	Inspection result (Is the judging standard satisfied?)	YES	Go to transient fault (See Gr00.).
		NO	Replacement of electronic control unit

[Fault code]
Diagnosis code: P062E/Flash code: 82
[Monitor]
Failure of injector circuit inside engine electronic control unit
[Fault (outline)]
Injector driver circuit (No. 2 and 4 cylinders)
[Diagnosis check]
- Injector power supply voltage in engine electronic control unit is monitored.

[Code generation condition]
- Injector (No. 2, No. 4 cylinder) power supply voltage in engine electronic control unit remains over 61.8 V or below 43.2 V for 3 consecutive cycles (Warning lamp is lit and diagnosis code is displayed on first establishment of code generation condition).

[Diagnosis check timing]
- Fault diagnosis is continuously performed during the driving cycle.

[Diagnostic requirement]
–

[Control effected by electronic control unit during fault]
- Injector magnetic valve (No. 2 and No. 3 cylinder) is stopped.
- Exhaust gas recirculation control is stopped.
- Throttle controls disabled
- Misfire detection is stopped.
- Auto cruise control stopped
- Diesel particulate filter regeneration is stopped.
- Injector actuator test is inhibited.
- Turbocharger actuator test is inhibited.
- Related fault check is stopped.

[Probable cause of trouble]
- Open-circuit or short-circuit of harness between electronic control unit and injector magnetic valves
- Malfunction of each connector
- Malfunction of injector magnetic valves
- Malfunction of electronic control unit

[Recoverability]
- Recovered if signal becomes normal when starter switch is turned OFF to ON (power supply resumed to electronic control unit).
  (Warning lamp is extinguished and diagnosis code is cleared at fourth display of diagnosis code after recovery.)

[Electronic Control Unit Connection Diagram]

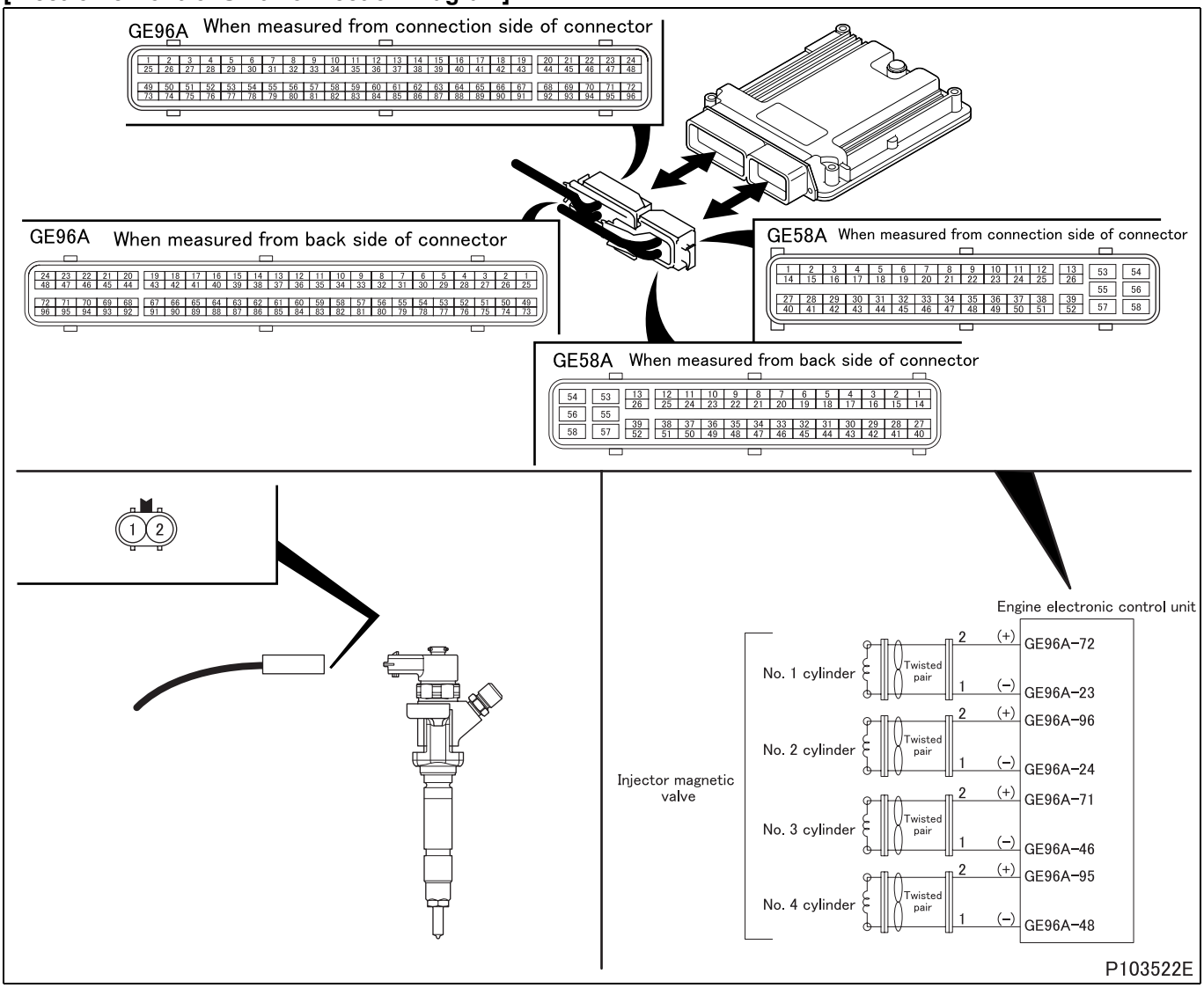

[Parts Identification and Location]

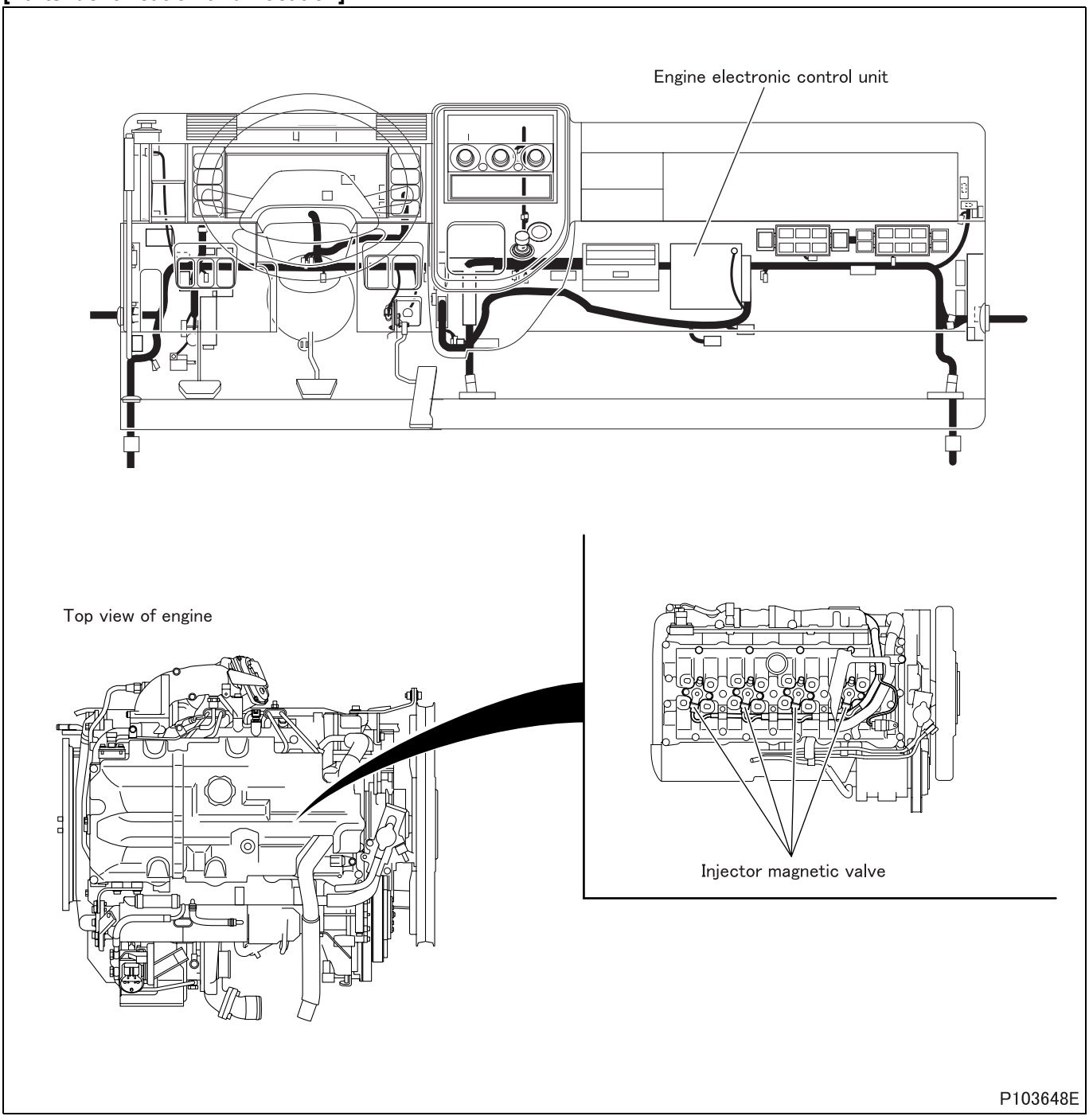

[Fault diagnosis]

- Perform checks in the sequence of the following steps.

Step 1	Inspection items		Inspection by control data
	Maintenance item		Perform the following actuator tests. • Injector magnetic valve (No. 2 cylinder): Perform item No. BD “Injector Test 3”. • Injector magnetic valve (No. 4 cylinder): Perform item No. BC “Injector Test 2”.
	Inspection condition		• Vehicle: stationary (vehicle speed 0 km/h {0 MPH}) • Engine speed: 1500 rpm or less • Transmission: neutral • The current diagnosis code does not occur.
	Requirements		Injector (No. 2 cylinder) or Injector (No. 4 cylinder) stops injection and engine vibrations become slightly larger.
	Inspection result (Is the judging standard satisfied?)	YES	Go to transient fault (See Gr00.).
		NO	Go to step 2.

Step 2	Inspection items		Inspection by electronic control unit connector
	Maintenance item		Measure value of resistance between following connector (GE96A) terminals. • Injector magnetic valve (No. 2 cylinder): 96 (+) and 24 (–) • Injector magnetic valve (No. 4 cylinder): 95 (+) and 48 (–)
	Inspection condition		Disconnect electronic control unit from harness and measure from connection side of harness connector.
	Requirements		0.255 ± 0.04 Ω (20°C {68°F})
	Inspection result (Is the judging standard satisfied?)	YES	Go to step 3.
		NO	Go to step 4.

Step 3	Inspection items		Inspection of electronic control unit connector
	Maintenance item		Inspection of connector
	Inspection condition		–
	Requirements		• Connector is properly connected. • No trace of water entry is found. • No corrosion is found in terminal. • Connection to terminal is appropriate.
	Inspection result (Is the judging standard satisfied?)	YES	Go to step 8.
		NO	Modify connector.

Step 4	Inspection items		Inspection of injector magnetic valve connector
	Maintenance item		Inspection of connector
	Inspection condition		–
	Requirements		• Connector is properly connected. • Connection to terminal is appropriate.
	Inspection result (Is the judging standard satisfied?)	YES	Go to step 5.
		NO	Modify connector.

Step 5	Inspection items		Inspection of injector magnetic valve unit
	Maintenance item		Measure value of resistance between connector terminal No. 1 and 2.
	Inspection condition		–
	Requirements		0.255 ± 0.04 Ω (20°C {68°F})
	Inspection result (Is the judging standard satisfied?)	YES	Go to step 6.
		NO	Replacement of injector

<Step 5 inspection diagram>

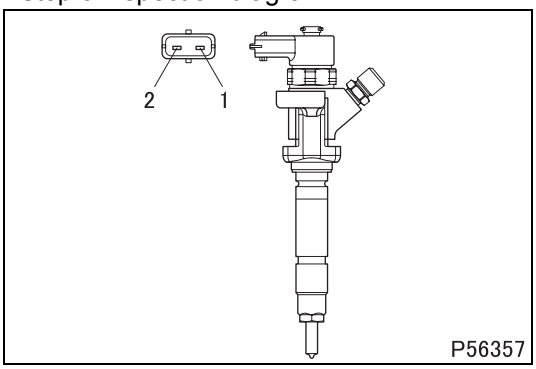

Step 6	Inspection items		Inspection of harness between injector magnetic valve and electronic control unit (power supply)
	Maintenance item		Check circuit between following connector terminals. • Injector magnetic valve (No. 2 cylinder): magnetic valve connector terminal No. 2 and electronic control unit connector (GE96A) terminal No. 96 • Injector magnetic valve (No. 4 cylinder): magnetic valve connector terminal No. 2 and electronic control unit connector (GE96A) terminal No. 95
	Inspection condition		Disconnect each device from harness and measure from connection side of harness connector.
	Requirements		There is continuity.
	Inspection result (Is the judging standard satisfied?)	YES	Go to step 7.
		NO	Modify harness.

Step 7	Inspection items		Inspection of harness between injector magnetic valve and electronic control unit (ground)
	Maintenance item		Check circuit between following connector terminals. • Injector magnetic valve (No. 2 cylinder): magnetic valve connector terminal No. 1 and electronic control unit connector (GE96A) terminal No. 24 • Injector magnetic valve (No. 4 cylinder): magnetic valve connector terminal No. 1 and electronic control unit connector (GE96A) terminal No. 48
	Inspection condition		Disconnect each device from harness and measure from connection side of harness connector.
	Requirements		There is continuity.
	Inspection result (Is the judging standard satisfied?)	YES	Go to step 8.
		NO	Modify harness.

Step 8	Inspection items		Inspection by control data
	Maintenance item		Perform the following actuator tests. • Injector magnetic valve (No. 2 cylinder): Perform item No. BD “Injector Test 3”. • Injector magnetic valve (No. 4 cylinder): Perform item No. BC “Injector Test 2”.
	Inspection condition		• Vehicle: stationary (vehicle speed 0 km/h {0 MPH}) • Engine speed: 1500 rpm or less • Transmission: neutral • The current diagnosis code does not occur.
	Requirements		Injector (No. 2 cylinder) or Injector (No. 4 cylinder) stops injection and engine vibrations become slightly larger.
	Inspection result (Is the judging standard satisfied?)	YES	Go to transient fault (See Gr00.).
		NO	Replacement of electronic control unit

[Fault code]
Diagnosis code: P0642/Flash code: 81
[Monitor]
Sensor power supply abnormal
[Fault (outline)]
Low signal range check
[Diagnosis check]
- Sensor supply voltage 1 in engine electronic control unit is monitored.
- Units served by sensor supply voltage 1
- Accelerator pedal position sensor (sensor 1)
- Intake air temperature sensor

[Code generation condition]
- Supply voltage to units remain below 4.7 V for 0.5 second.
  (Warning lamp is lit and diagnosis code is displayed on first establishment of code generation condition.)

[Diagnosis check timing]
- Fault diagnosis is continuously performed during the driving cycle.

[Diagnostic requirement]
–

[Control effected by electronic control unit during fault]
- Related fault check is stopped.

[Probable cause of trouble]
- Open-circuit or short-circuit of harness between electronic control unit and each sensor
- Malfunction of each connector
- Malfunction of each sensor
- Malfunction of electronic control unit

[Recoverability]
- Recovered if signal becomes normal when starter switch is turned OFF to ON (power supply resumed to electronic control unit).
  (Warning lamp is extinguished and diagnosis code is cleared at fourth display of diagnosis code after recovery.)

[Electronic Control Unit Connection Diagram]

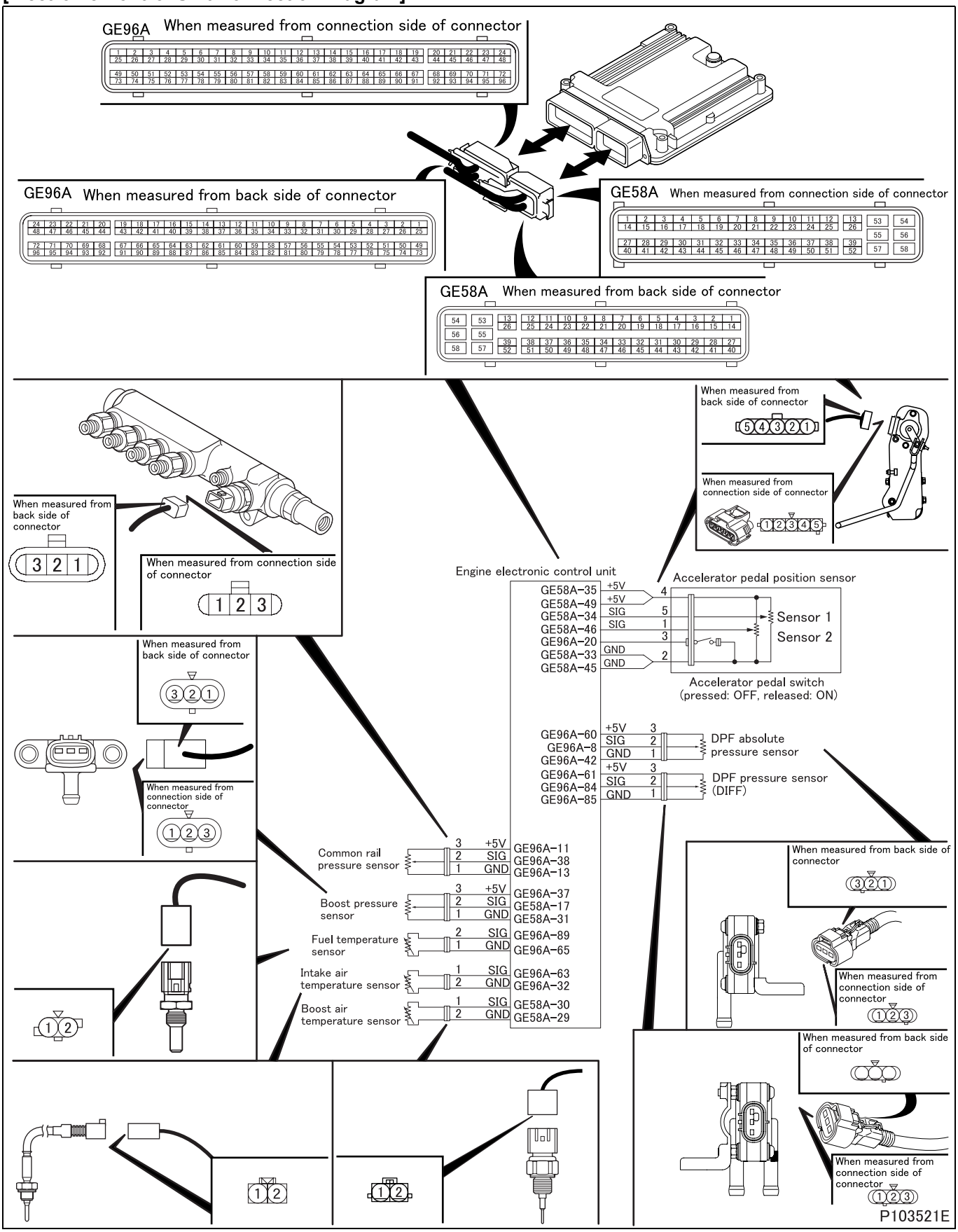

[Parts Identification and Location]

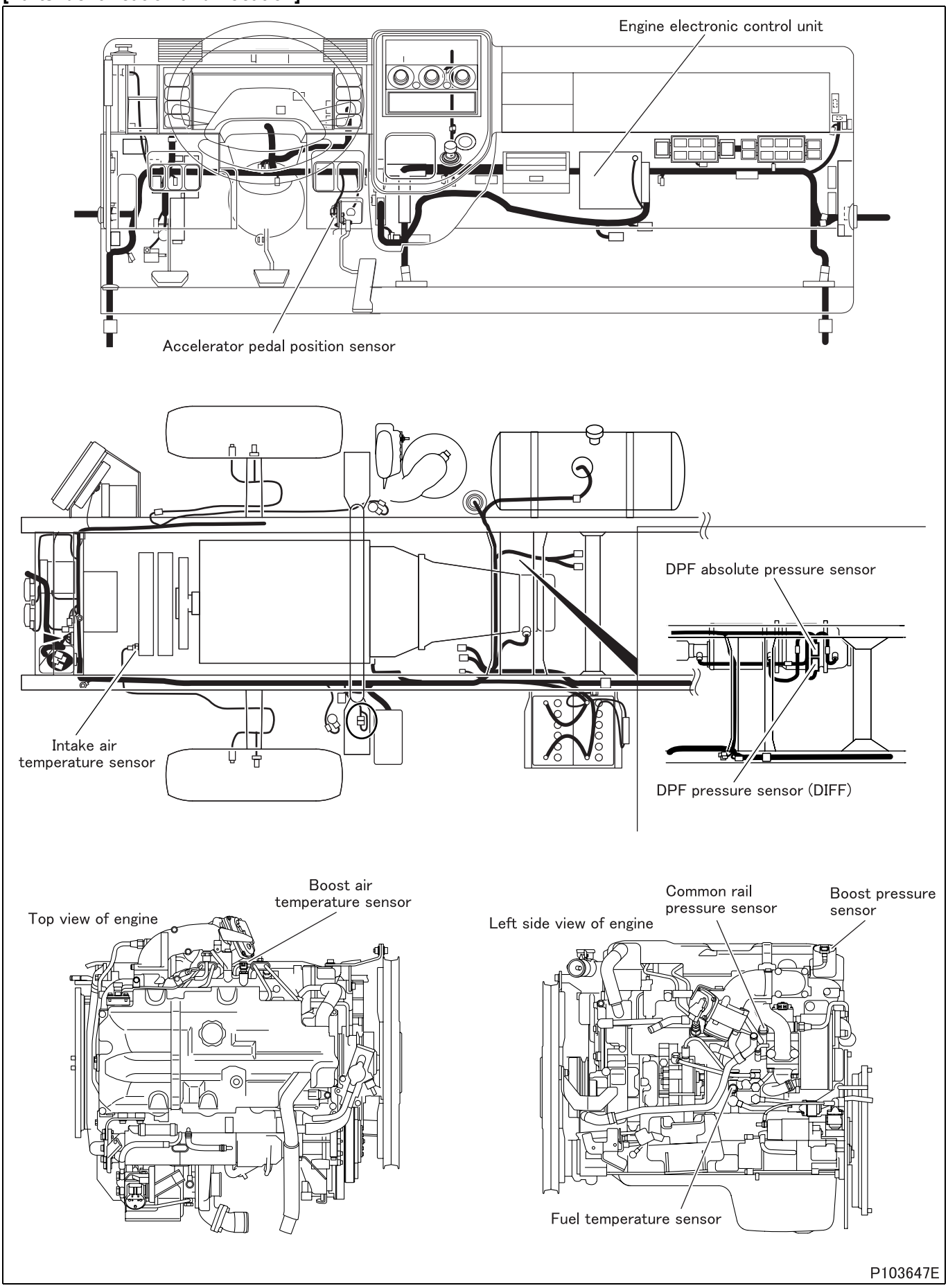

[Fault diagnosis]

- Perform checks in the sequence of the following steps.

Step 1	Inspection items		Inspection of electronic control unit connector
	Maintenance item		Inspection of connector
	Inspection condition		–
	Requirements		• Connector is properly connected. • No trace of water entry is found. • No corrosion is found in terminal. • Connection to terminal is appropriate.
	Inspection result (Is the judging standard satisfied?)	YES	Go to step 2.
		NO	Modify connector.

Step 2	Inspection items		Inspection by electronic control unit connector (power supply): accelerator pedal position sensor (sensor 1)
	Maintenance item		Measure value of voltage between connector (GE58A) terminal No. 35 (+) and No. 33 (–).
	Inspection condition		• Measure from back side of connector of harness with each device connected to harness. • Starter switch: ON
	Requirements		5 V
	Inspection result (Is the judging standard satisfied?)	YES	Go to step 5.
		NO	Go to step 3.

Step 3	Inspection items		Inspection of accelerator pedal position sensor (sensor 1) connector
	Maintenance item		Inspection of connector
	Inspection condition		–
	Requirements		• Connector is properly connected. • No trace of water entry is found. • No corrosion is found in terminal. • Connection to terminal is appropriate.
	Inspection result (Is the judging standard satisfied?)	YES	Go to step 4.
		NO	Modify connector.

Step 4	Inspection items		Inspection of harness between electronic control unit and accelerator pedal position sensor (sensor 1) (power supply)
	Maintenance item		Check circuit between accelerator pedal position sensor (sensor 1) connector terminal No. 4 and electronic control unit connector (GE58A) terminal No. 35.
	Inspection condition		Disconnect each device from harness and measure from connection side of harness connector.
	Requirements		There is continuity.
	Inspection result (Is the judging standard satisfied?)	YES	Go to step 5.
		NO	Modify harness.

Step 5	Inspection items		Inspection by electronic control unit connector: intake air temperature sensor
	Maintenance item		Measure value of voltage between connector (GE96A) terminal No. 63 (+) and No. 32 (–).
	Inspection condition		• Measure from back side of connector of harness with each device connected to harness. • Starter switch: ON
	Requirements		5 V
	Inspection result (Is the judging standard satisfied?)	YES	Go to transient fault (See Gr00.).
		NO	Go to step 6.

Step 6	Inspection items		Inspection of intake air temperature sensor connector
	Maintenance item		Inspection of connector
	Inspection condition		–
	Requirements		• Connector is properly connected. • No trace of water entry is found. • No corrosion is found in terminal. • Connection to terminal is appropriate.
	Inspection result (Is the judging standard satisfied?)	YES	Go to step 7.
		NO	Modify connector.

Step 7	Inspection items		Inspection of harness between electronic control unit and intake air temperature sensor (power supply)
	Maintenance item		Check circuit between intake air temperature sensor connector terminal No. 1 and electronic control unit connector (GE96A) terminal No. 63
	Inspection condition		Disconnect each device from harness and measure from connection side of harness connector.
	Requirements		There is continuity.
	Inspection result (Is the judging standard satisfied?)	YES	Replacement of electronic control unit
		NO	Modify harness.

[Fault code]
Diagnosis code: P0643/Flash code: 81
[Monitor]
Sensor power supply abnormal
[Fault (outline)]
High signal range check
[Diagnosis check]
- Sensor supply voltage 1 in engine electronic control unit is monitored.
- Units served by sensor supply voltage 1
- Accelerator pedal position sensor (sensor 1)
- Intake air temperature sensor

[Code generation condition]
- Supply voltage to units remain over 5.3 V for 0.5 second.
  (Warning lamp is lit and diagnosis code is displayed on first establishment of code generation condition.)

[Diagnosis check timing]
- Fault diagnosis is continuously performed during the driving cycle.

[Diagnostic requirement]
–

[Control effected by electronic control unit during fault]
- Related fault check is stopped.

[Probable cause of trouble]
- Open-circuit or short-circuit of harness between electronic control unit and each sensor
- Malfunction of each connector
- Malfunction of each sensor
- Malfunction of electronic control unit

[Recoverability]
- Recovered if signal becomes normal when starter switch is turned OFF to ON (power supply resumed to electronic control unit).
  (Warning lamp is extinguished and diagnosis code is cleared at fourth display of diagnosis code after recovery.)

[Electronic Control Unit Connection Diagram]

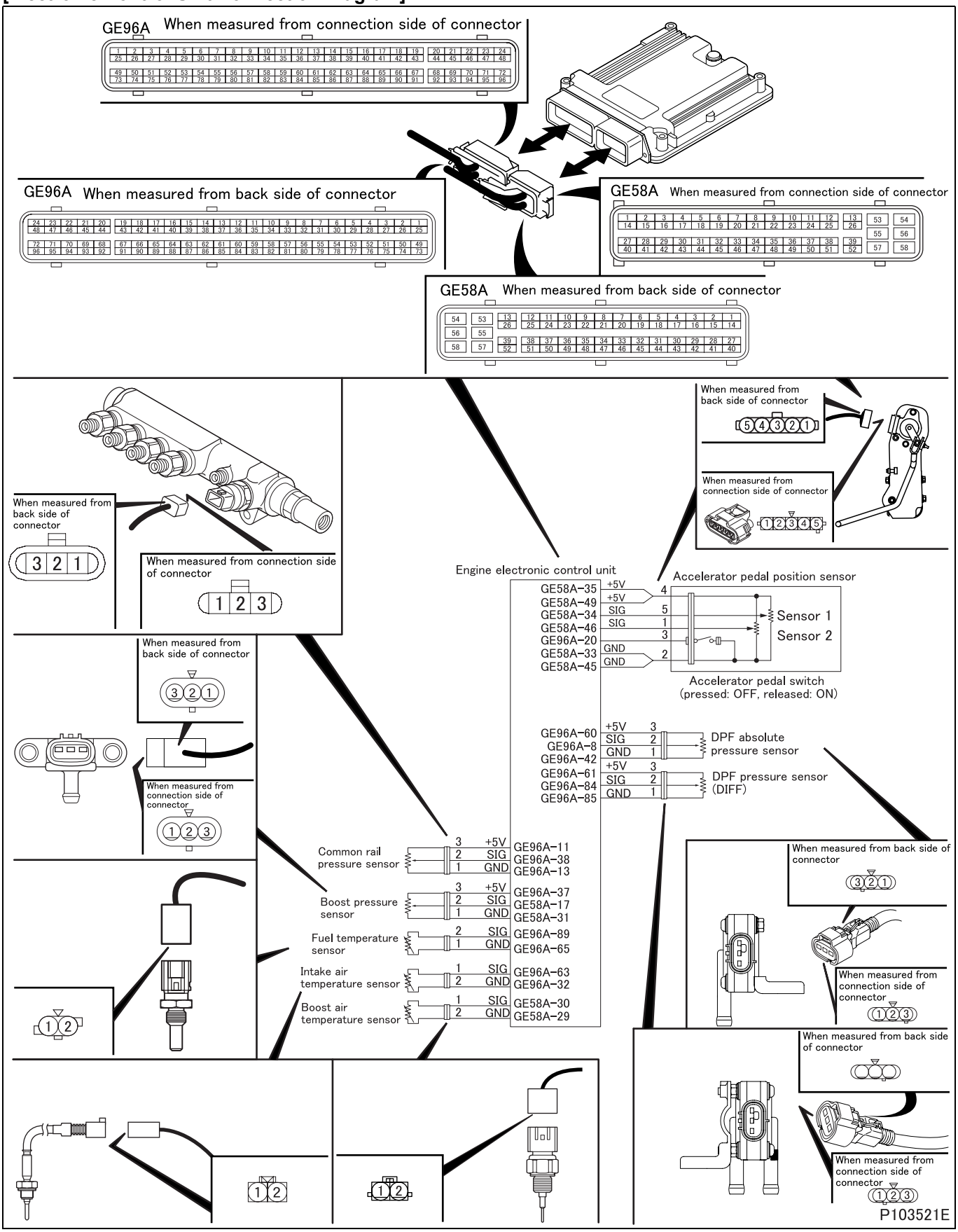

[Parts Identification and Location]

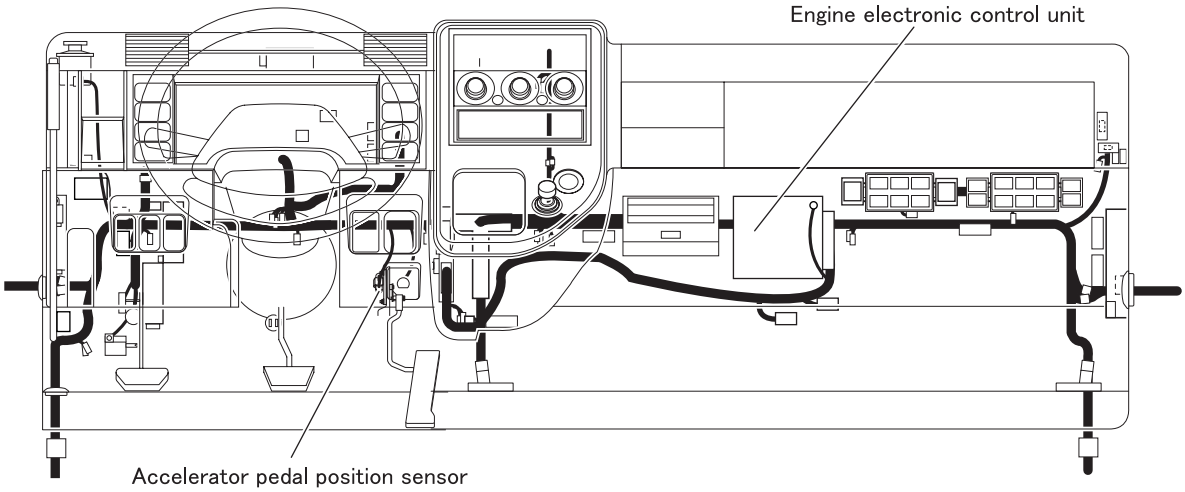

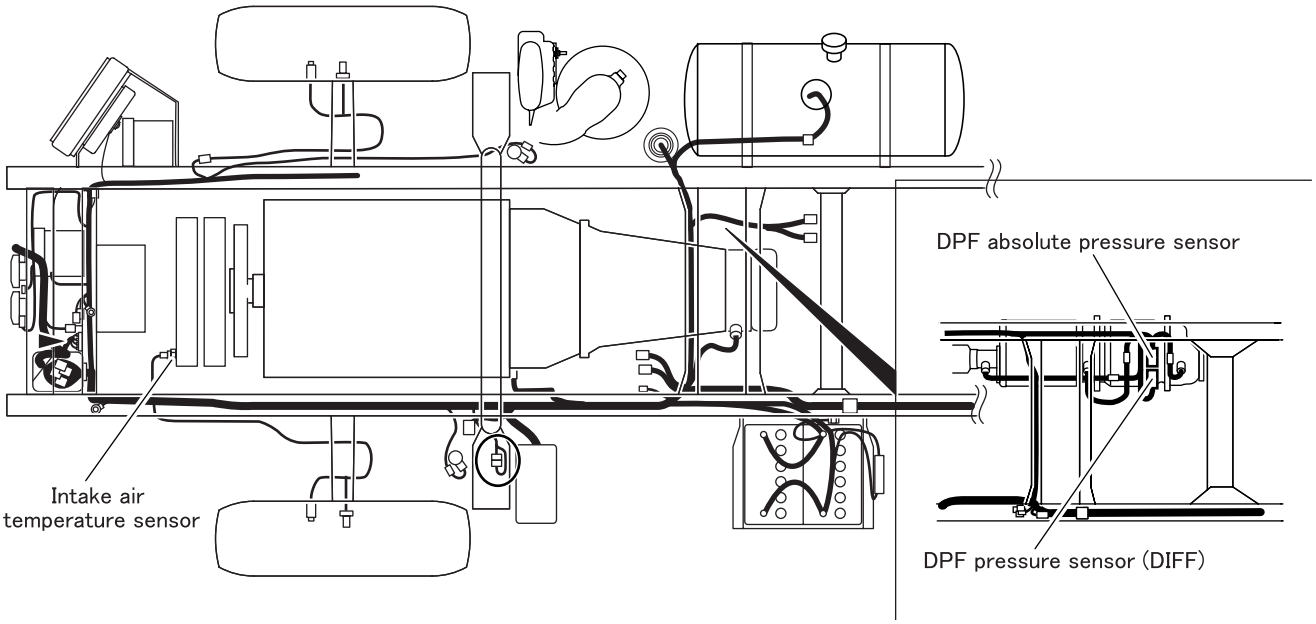

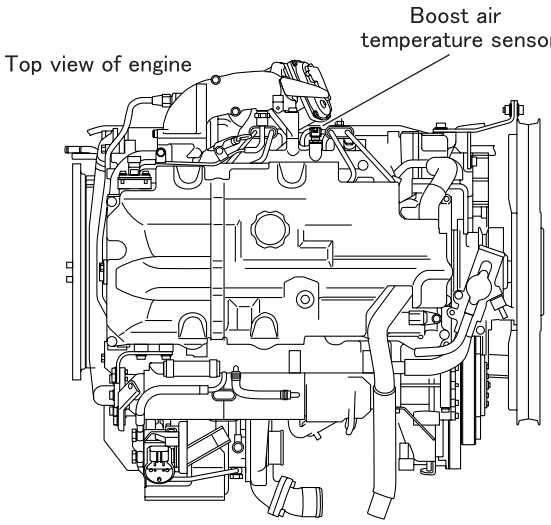

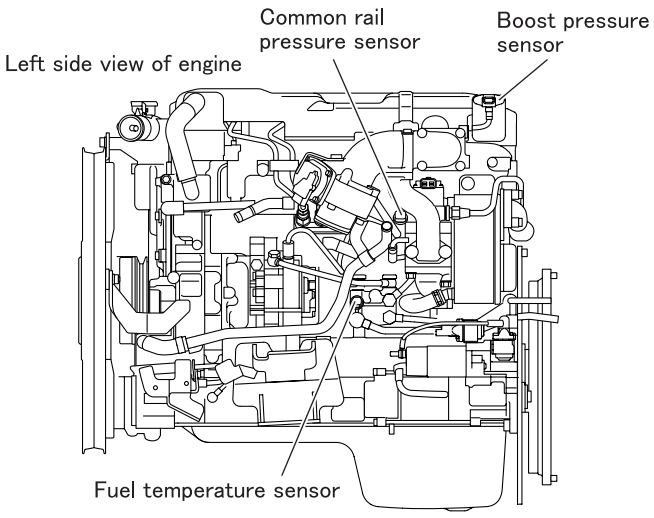

P103647E

[Fault diagnosis]

- Perform checks in the sequence of the following steps.

Step 1	Inspection items		Inspection of electronic control unit connector
	Maintenance item		Inspection of connector
	Inspection condition		–
	Requirements		• Connector is properly connected. • No trace of water entry is found. • No corrosion is found in terminal. • Connection to terminal is appropriate.
	Inspection result (Is the judging standard satisfied?)	YES	Go to step 2.
		NO	Modify connector.

Step 2	Inspection items		Inspection by electronic control unit connector (power supply): accelerator pedal position sensor (sensor 1)
	Maintenance item		Measure value of voltage between connector (GE58A) terminal No. 35 (+) and No. 33 (–).
	Inspection condition		• Measure from back side of connector of harness with each device connected to harness. • Starter switch: ON
	Requirements		5 V
	Inspection result (Is the judging standard satisfied?)	YES	Go to step 5.
		NO	Go to step 3.

Step 3	Inspection items		Inspection of accelerator pedal position sensor (sensor 1) connector
	Maintenance item		Inspection of connector
	Inspection condition		–
	Requirements		• Connector is properly connected. • No trace of water entry is found. • No corrosion is found in terminal. • Connection to terminal is appropriate.
	Inspection result (Is the judging standard satisfied?)	YES	Go to step 4.
		NO	Modify connector.

Step 4	Inspection items		Inspection of harness between electronic control unit and accelerator pedal position sensor (sensor 1) (power supply)
	Maintenance item		Check circuit between accelerator pedal position sensor (sensor 1) connector terminal No. 4 and electronic control unit connector (GE58A) terminal No. 35.
	Inspection condition		Disconnect each device from harness and measure from connection side of harness connector.
	Requirements		There is continuity.
	Inspection result (Is the judging standard satisfied?)	YES	Go to step 5.
		NO	Modify harness.

Step 5	Inspection items		Inspection by electronic control unit connector: intake air temperature sensor
	Maintenance item		Measure value of voltage between connector (GE96A) terminal No. 63 (+) and No. 32 (–).
	Inspection condition		• Measure from back side of connector of harness with each device connected to harness. • Starter switch: ON
	Requirements		5 V
	Inspection result (Is the judging standard satisfied?)	YES	Go to transient fault (See Gr00.).
		NO	Go to step 6.

Step 6	Inspection items		Inspection of intake air temperature sensor connector
	Maintenance item		Inspection of connector
	Inspection condition		–
	Requirements		• Connector is properly connected. • No trace of water entry is found. • No corrosion is found in terminal. • Connection to terminal is appropriate.
	Inspection result (Is the judging standard satisfied?)	YES	Go to step 7.
		NO	Modify connector.

Step 7	Inspection items		Inspection of harness between electronic control unit and intake air temperature sensor (power supply)
	Maintenance item		Check circuit between intake air temperature sensor connector terminal No. 1 and electronic control unit connector (GE96A) terminal No. 63
	Inspection condition		Disconnect each device from harness and measure from connection side of harness connector.
	Requirements		There is continuity.
	Inspection result (Is the judging standard satisfied?)	YES	Replacement of electronic control unit
		NO	Modify harness.

[Fault code]
Diagnosis code: P0650/Flash code: 3
[Monitor]
Failure of engine warning lamp (orange)
[Fault (outline)]
- Short circuit battery
- Short circuit ground
- Open circuit
- Overload

[Diagnosis check]
- Engine warning lamp (orange) circuit is monitored for fault.

[Code generation condition]
- Engine warning lamp (orange) circuit remains open, shorted or overcurrent as detected for 5 seconds.
  (Warning lamp is lit and diagnosis code is displayed on third establishment of code generation condition.)

[Diagnosis check timing]
- Fault diagnosis is performed each time when the control is initiated.
- Fault diagnosis is performed each time when the control is halted.

[Diagnostic requirement]
–

[Control effected by electronic control unit during fault]
- Effects no special control.

[Probable cause of trouble]
- Open-circuit or short-circuit of harness between electronic control unit and meter cluster (engine warning lamp (orange))
- Malfunction of each connector
- Malfunction of meter cluster (engine warning lamp (orange))
- Malfunction of electronic control unit

[Recoverability]
- Recovered if signal becomes normal with starter switch in ON position.
  (Warning lamp is extinguished and diagnosis code is cleared at fourth display of diagnosis code after recovery.)

[Electronic Control Unit Connection Diagram]

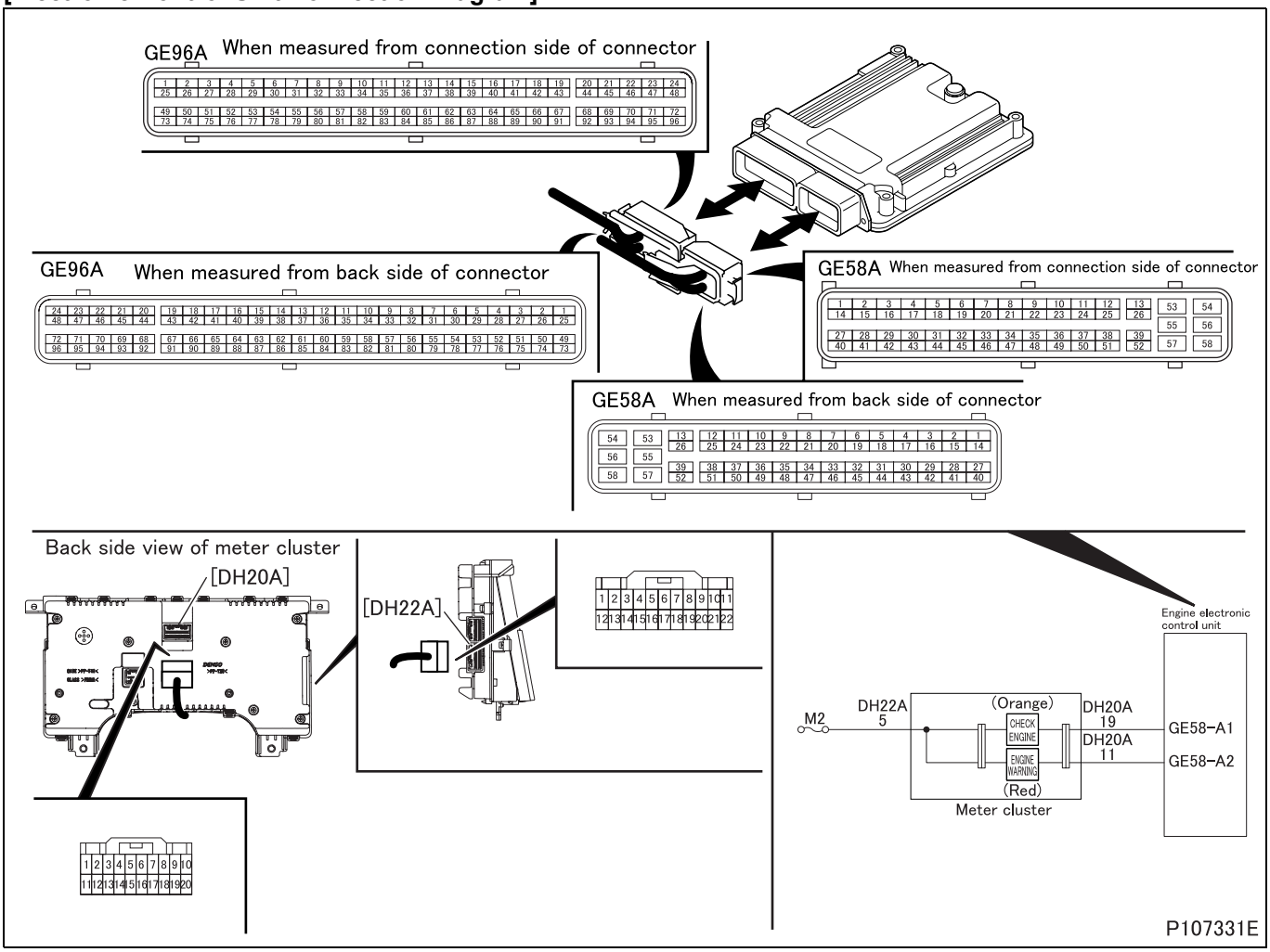

[Parts Identification and Location]

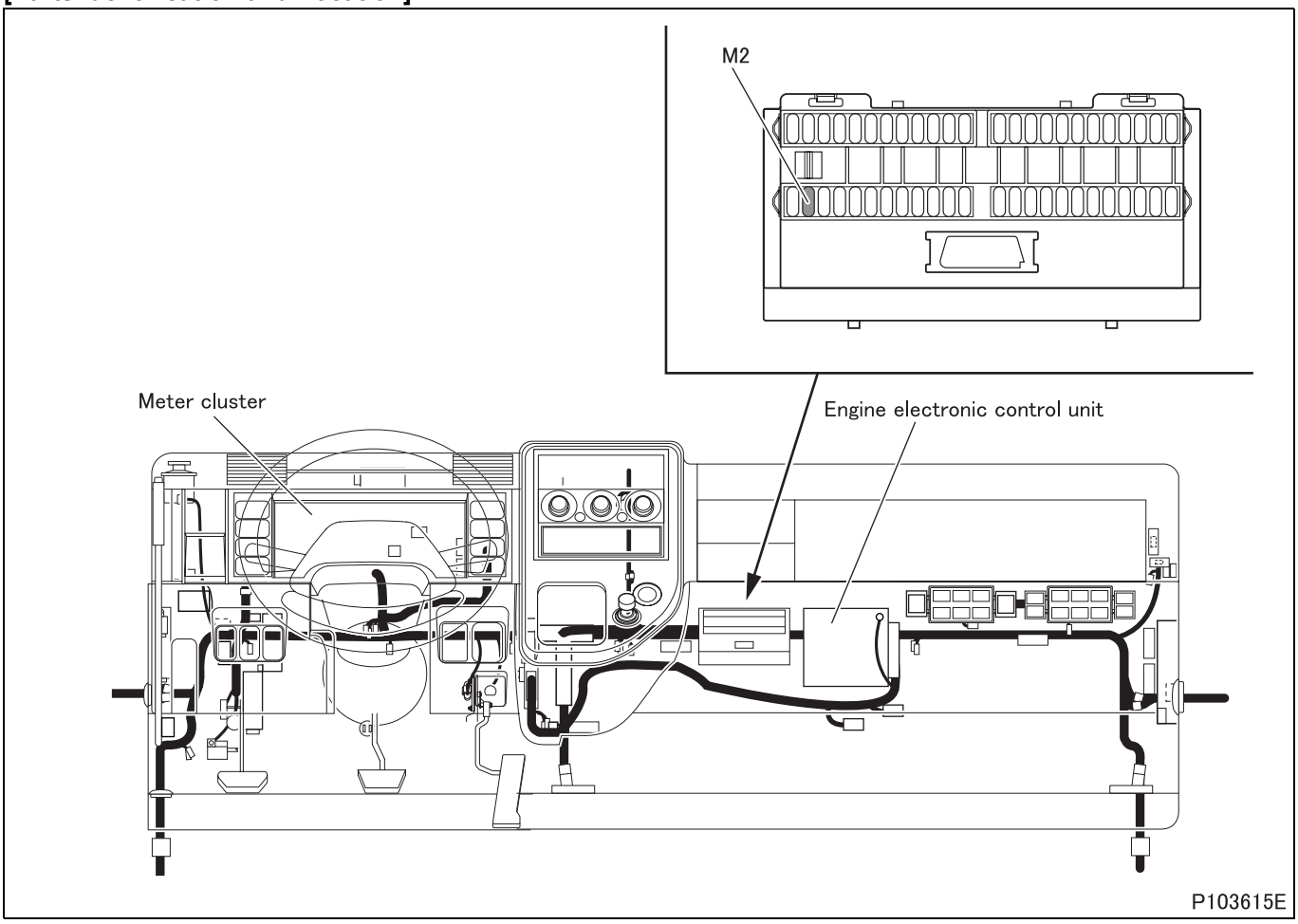

[Fault diagnosis]

- Perform checks in the sequence of the following steps.

Step 1	Inspection items		Inspection by control data
	Maintenance item		Perform actuator test item No. B0 “MIL”.
	Inspection condition		Starter switch: ON
	Requirements		Lamp illuminates for six seconds.
	Inspection result (Is the judging standard satisfied?)	YES	Go to transient fault (See Gr00.).
		NO	Go to step 2.

Step 2	Inspection items		Inspection of electronic control unit connector
	Maintenance item		Ground connector (GE58A) terminal No. 1.
	Inspection condition		It wires for the ground harness from the other side of the connector.
	Requirements		Lamp illuminates.
	Inspection result (Is the judging standard satisfied?)	YES	Go to step 3.
		NO	Go to step 4.

Step 3	Inspection items		Inspection of electronic control unit connector
	Maintenance item		Inspection of connector
	Inspection condition		–
	Requirements		• Connector is properly connected. • No trace of water entry is found. • No corrosion is found in terminal. • Connection to terminal is appropriate.
	Inspection result (Is the judging standard satisfied?)	YES	Replacement of electronic control unit
		NO	Modify connector.

Step 4	Inspection items		Inspection of harness between fuse and meter cluster
	Maintenance item		Check circuit between fuse (M2) and meter cluster connector (DH22A) terminal No. 5
	Inspection condition		Disconnect each device from harness and measure from connection side of harness connector.
	Requirements		There is continuity.
	Inspection result (Is the judging standard satisfied?)	YES	Go to step 5.
		NO	Modify harness.

Step 5	Inspection items		Inspection of harness between meter cluster and electronic control unit
	Maintenance item		Check circuit between meter cluster connector (DH20A) terminal No. 19 and electronic control unit connector (GE58A) terminal No. 1
	Inspection condition		Disconnect each device from harness and measure from connection side of harness connector.
	Requirements		There is continuity.
	Inspection result (Is the judging standard satisfied?)	YES	Go to step 6.
		NO	Modify harness.

Step 6	Inspection items		Inspection of meter cluster
	Maintenance item		Inspection of connector
	Inspection condition		–
	Requirements		• Connector is properly connected. • No trace of water entry is found. • No corrosion is found in terminal. • Connection to terminal is appropriate.
	Inspection result (Is the judging standard satisfied?)	YES	Replacement of meter cluster or lamp
		NO	Modify connector.

[Fault code]
Diagnosis code: P0652/Flash code: 81
[Monitor]
Sensor power supply abnormal
[Fault (outline)]
Low signal range check
[Diagnosis check]
- Sensor supply voltage 2 in engine electronic control unit is monitored.
- Units served by sensor supply voltage 2
- Boost pressure sensor
- Accelerator pedal position sensor (sensor 2)
- Fuel temperature sensor

[Code generation condition]
- Supply voltage to units remain below 4.7 V for 0.5 second.
  (Warning lamp is lit and diagnosis code is displayed on first establishment of code generation condition.)

[Diagnosis check timing]
- Fault diagnosis is continuously performed during the driving cycle.

[Diagnostic requirement]
–

[Control effected by electronic control unit during fault]
- Related fault check is stopped.

[Probable cause of trouble]
- Open-circuit or short-circuit of harness between electronic control unit and each sensor
- Malfunction of each connector
- Malfunction of each sensor
- Malfunction of electronic control unit

[Recoverability]
- Recovered if signal becomes normal when starter switch is turned OFF to ON (power supply resumed to electronic control unit).
  (Warning lamp is extinguished and diagnosis code is cleared at fourth display of diagnosis code after recovery.)

[Electronic Control Unit Connection Diagram]

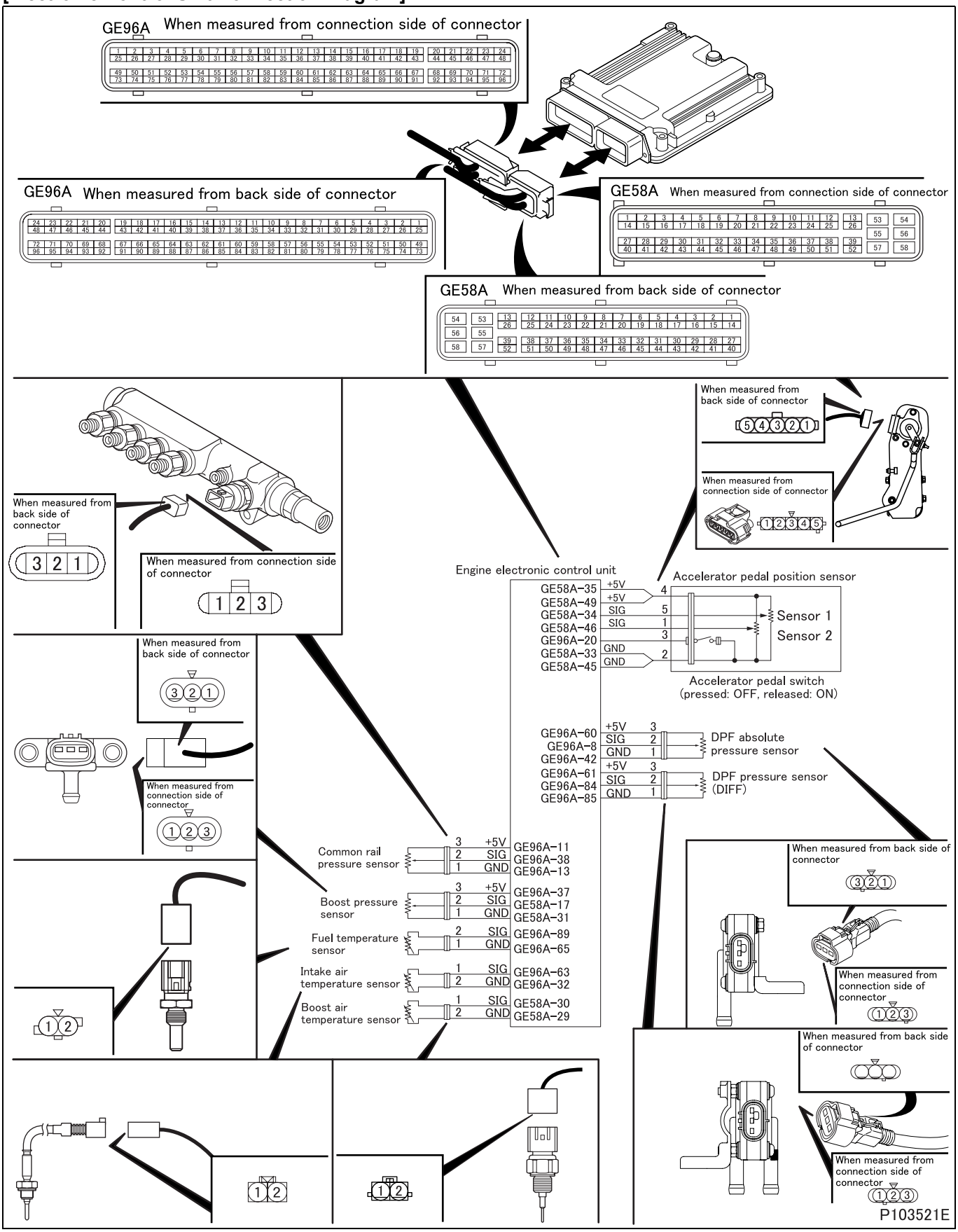

[Parts Identification and Location]

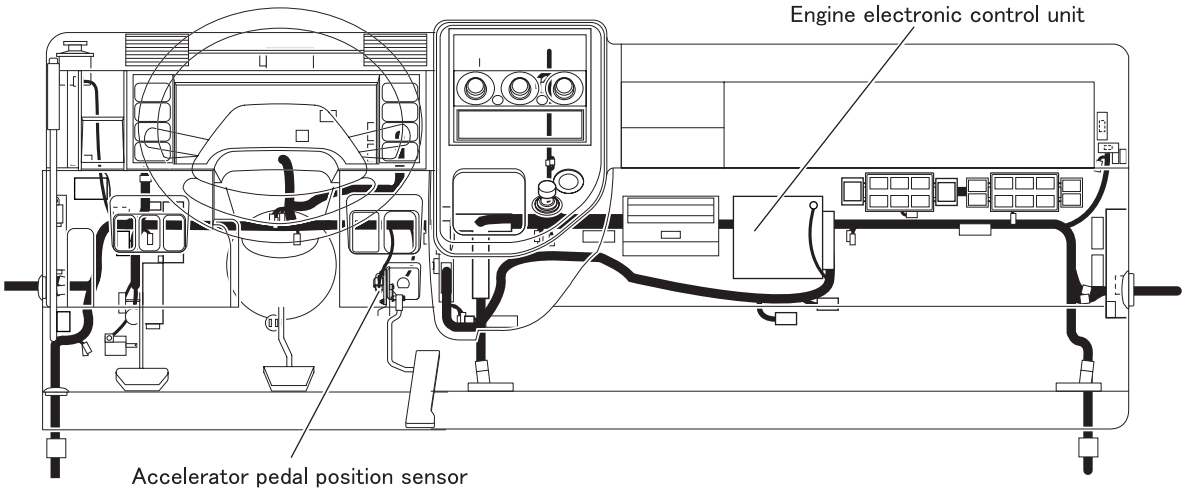

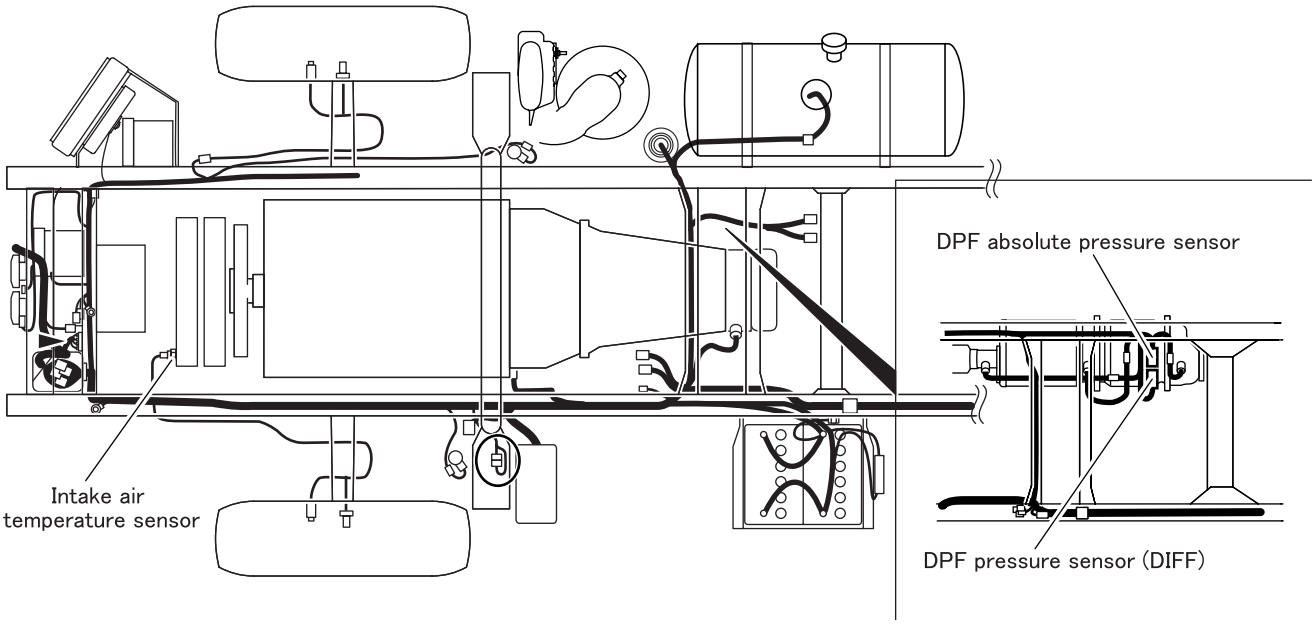

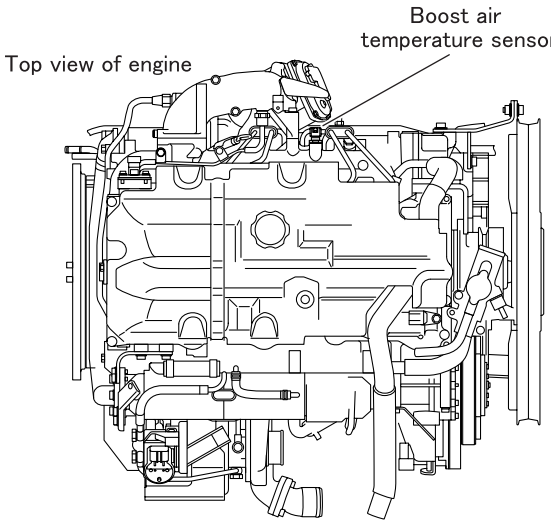

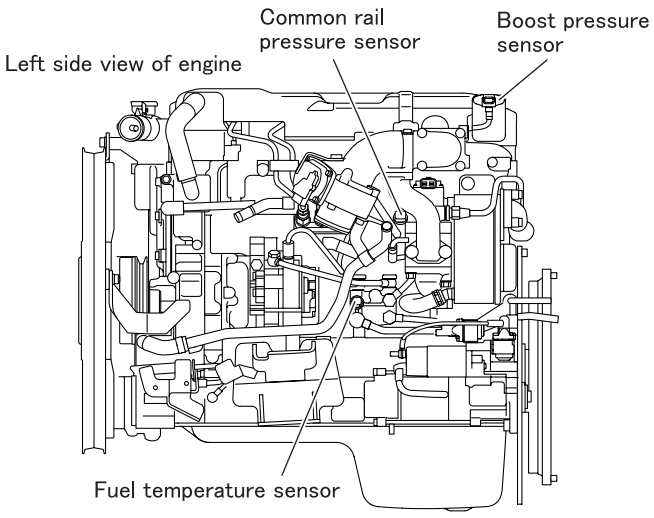

P103647E

[Fault diagnosis]

- Perform checks in the sequence of the following steps.

Step 1	Inspection items		Inspection of electronic control unit connector
	Maintenance item		Inspection of connector
	Inspection condition		–
	Requirements		• Connector is properly connected. • No trace of water entry is found. • No corrosion is found in terminal. • Connection to terminal is appropriate.
	Inspection result (Is the judging standard satisfied?)	YES	Go to step 2.
		NO	Modify connector.

Step 2	Inspection items		Inspection by electronic control unit connector (power supply): boost pressure sensor
	Maintenance item		Measure value of voltage between connector (GE96A) terminal No. 37 (+) and No. 14 (–).
	Inspection condition		• Measure from back side of connector of harness with each device connected to harness. • Starter switch: ON
	Requirements		5 V
	Inspection result (Is the judging standard satisfied?)	YES	Go to step 5.
		NO	Go to step 3.

Step 3	Inspection items		Inspection of boost pressure sensor connector
	Maintenance item		Inspection of connector
	Inspection condition		–
	Requirements		• Connector is properly connected. • No trace of water entry is found. • No corrosion is found in terminal. • Connection to terminal is appropriate.
	Inspection result (Is the judging standard satisfied?)	YES	Go to step 4.
		NO	Modify connector.

Step 4	Inspection items		Inspection of harness between electronic control unit and boost pressure sensor (power supply)
	Maintenance item		Check circuit between boost pressure sensor connector terminal No. 3 and electronic control unit connector (GE96A) terminal No. 37.
	Inspection condition		Disconnect each device from harness and measure from connection side of harness connector.
	Requirements		There is continuity.
	Inspection result (Is the judging standard satisfied?)	YES	Go to step 5.
		NO	Modify harness.

Step 5	Inspection items		Inspection by electronic control unit connector (power supply): accelerator pedal position sensor (sensor 2)
	Maintenance item		Measure value of voltage between connector (GE58A) terminal No. 49 (+) and No. 45 (–).
	Inspection condition		• Measure from back side of connector of harness with each device connected to harness. • Starter switch: ON
	Requirements		5 V
	Inspection result (Is the judging standard satisfied?)	YES	Go to step 8.
		NO	Go to step 6.

Step 6	Inspection items		Inspection of accelerator pedal position sensor (sensor 2) connector
	Maintenance item		Inspection of connector
	Inspection condition		–
	Requirements		• Connector is properly connected. • No trace of water entry is found. • No corrosion is found in terminal. • Connection to terminal is appropriate.
	Inspection result (Is the judging standard satisfied?)	YES	Go to step 7.
		NO	Modify connector.

Step 7	Inspection items		Inspection of harness between electronic control unit and accelerator pedal position sensor (sensor 2) (power supply)
	Maintenance item		Check circuit between accelerator pedal position sensor (sensor 2) connector terminal No. 4 and electronic control unit connector (GE58A) terminal No. 49
	Inspection condition		Disconnect each device from harness and measure from connection side of harness connector.
	Requirements		There is continuity.
	Inspection result (Is the judging standard satisfied?)	YES	Go to step 8.
		NO	Modify harness.

Step 8	Inspection items		Inspection by electronic control unit connector: fuel temperature sensor
	Maintenance item		Measure value of voltage between connector (GE96A) terminal No. 89 (+) and No. 65 (–).
	Inspection condition		• Measure from back side of connector of harness with each device connected to harness. • Starter switch: ON
	Requirements		5 V
	Inspection result (Is the judging standard satisfied?)	YES	Go to transient fault (See Gr00.).
		NO	Go to step 9.

Step 9	Inspection items		Inspection of fuel temperature sensor connector
	Maintenance item		Inspection of connector
	Inspection condition		–
	Requirements		• Connector is properly connected. • No trace of water entry is found. • No corrosion is found in terminal. • Connection to terminal is appropriate.
	Inspection result (Is the judging standard satisfied?)	YES	Go to step 10.
		NO	Modify connector.

Step 10	Inspection items		Inspection of harness between electronic control unit and fuel temperature sensor (power supply)
	Maintenance item		Check circuit between fuel temperature sensor connector terminal No. 1 and electronic control unit connector (GE96A) terminal No. 89
	Inspection condition		Disconnect each device from harness and measure from connection side of harness connector.
	Requirements		There is continuity.
	Inspection result (Is the judging standard satisfied?)	YES	Replacement of electronic control unit
		NO	Modify harness.

[Fault code]
Diagnosis code: P0653/Flash code: 81
[Monitor]
Sensor power supply abnormal
[Fault (outline)]
High signal range check
[Diagnosis check]
- Sensor supply voltage 2 in engine electronic control unit is monitored.
- Units served by sensor supply voltage 2
- Boost pressure sensor
- Accelerator pedal position sensor (sensor 2)
- Fuel temperature sensor

[Code generation condition]
- Supply voltage to units remain over 5.3 V for 0.5 second.
  (Warning lamp is lit and diagnosis code is displayed on first establishment of code generation condition.)

[Diagnosis check timing]
- Fault diagnosis is continuously performed during the driving cycle.

[Diagnostic requirement]
–

[Control effected by electronic control unit during fault]
- Related fault check is stopped.

[Probable cause of trouble]
- Open-circuit or short-circuited harness between electronic control unit and each sensor
- Malfunction of each connector
- Malfunction of each sensor
- Malfunction of electronic control unit

[Recoverability]
- Recovered if signal becomes normal when starter switch is turned OFF to ON (power supply resumed to electronic control unit).
  (Warning lamp is extinguished and diagnosis code is cleared at fourth display of diagnosis code after recovery.)

[Electronic Control Unit Connection Diagram]

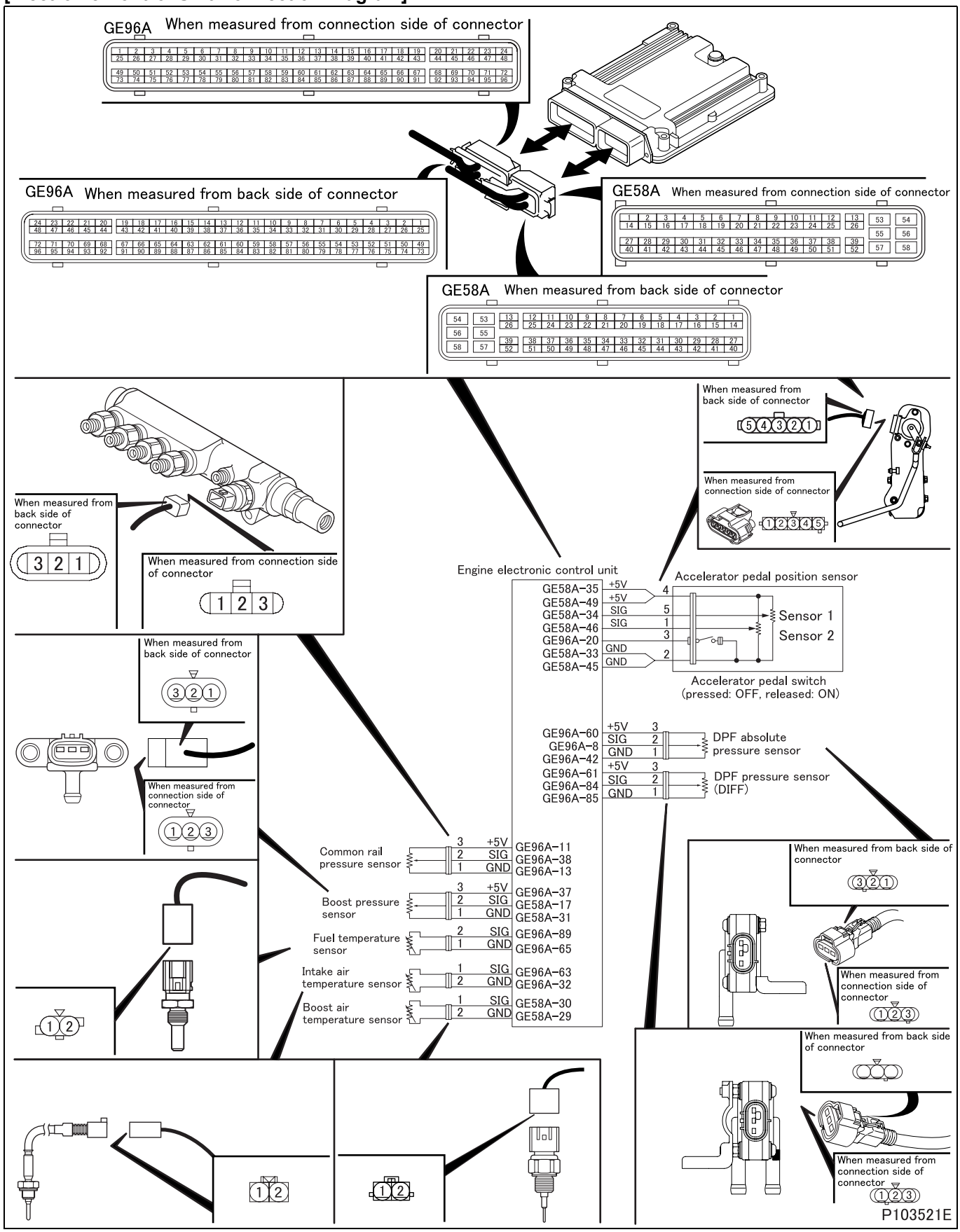

[Parts Identification and Location]

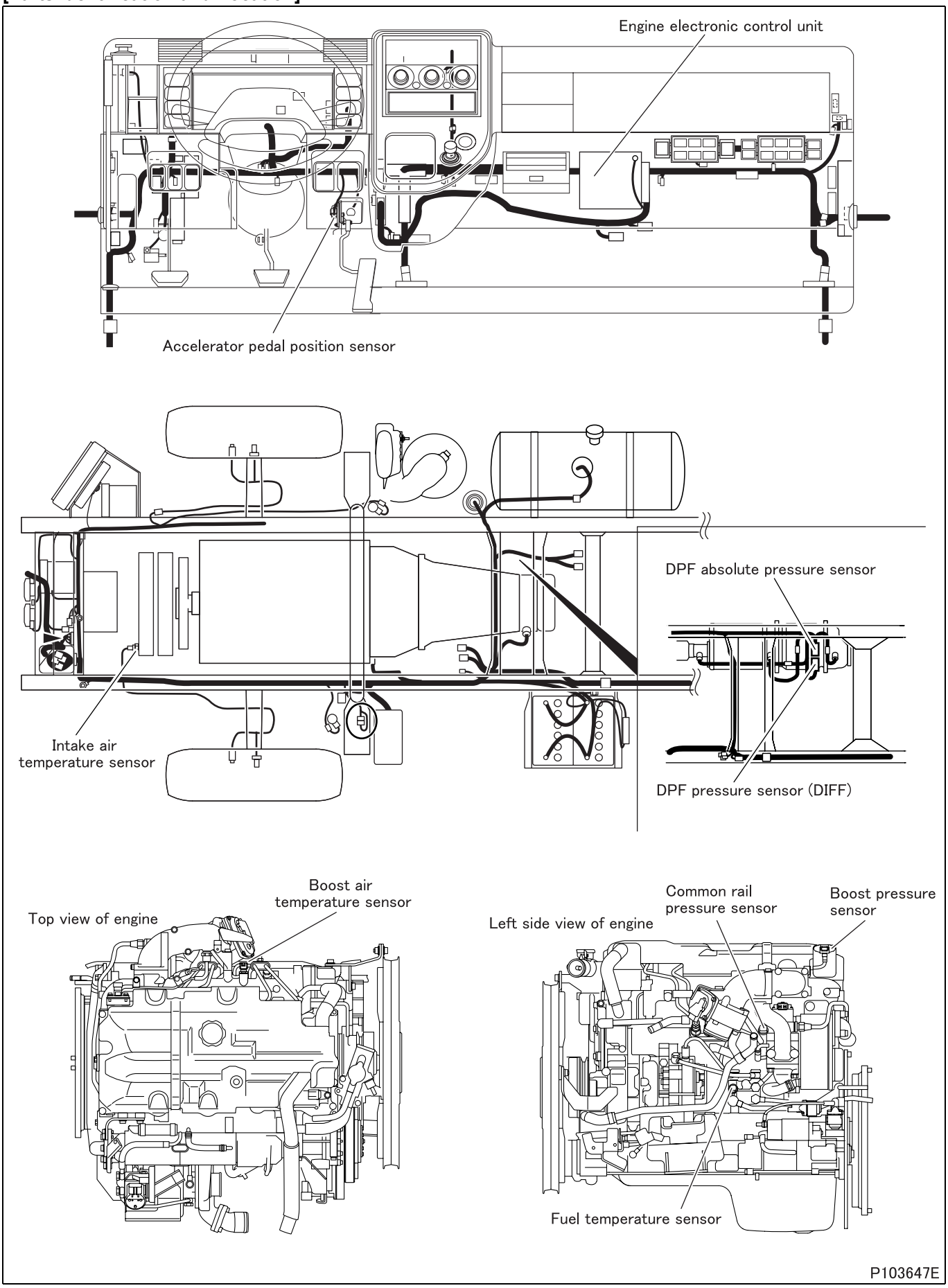

[Fault diagnosis]

- Perform checks in the sequence of the following steps.

Step 1	Inspection items		Inspection of electronic control unit connector
	Maintenance item		Inspection of connector
	Inspection condition		–
	Requirements		• Connector is properly connected. • No trace of water entry is found. • No corrosion is found in terminal. • Connection to terminal is appropriate.
	Inspection result (Is the judging standard satisfied?)	YES	Go to step 2.
		NO	Modify connector.

Step 2	Inspection items		Inspection by electronic control unit connector (power supply): boost pressure sensor
	Maintenance item		Measure value of voltage between connector (GE96A) terminal No. 37 (+) and No. 14 (–).
	Inspection condition		• Measure from back side of connector of harness with each device connected to harness. • Starter switch: ON
	Requirements		5 V
	Inspection result (Is the judging standard satisfied?)	YES	Go to step 5.
		NO	Go to step 3.

Step 3	Inspection items		Inspection of boost pressure sensor connector
	Maintenance item		Inspection of connector
	Inspection condition		–
	Requirements		• Connector is properly connected. • No trace of water entry is found. • No corrosion is found in terminal. • Connection to terminal is appropriate.
	Inspection result (Is the judging standard satisfied?)	YES	Go to step 4.
		NO	Modify connector.

Step 4	Inspection items		Inspection of harness between electronic control unit and boost pressure sensor (power supply)
	Maintenance item		Check circuit between boost pressure sensor connector terminal No. 3 and electronic control unit connector (GE96A) terminal No. 37.
	Inspection condition		Disconnect each device from harness and measure from connection side of harness connector.
	Requirements		There is continuity.
	Inspection result (Is the judging standard satisfied?)	YES	Go to step 5.
		NO	Modify harness.

Step 5	Inspection items		Inspection by electronic control unit connector (power supply): accelerator pedal position sensor (sensor 2)
	Maintenance item		Measure value of voltage between connector (GE58A) terminal No. 49 (+) and No. 45 (–).
	Inspection condition		• Measure from back side of connector of harness with each device connected to harness. • Starter switch: ON
	Requirements		5 V
	Inspection result (Is the judging standard satisfied?)	YES	Go to step 8.
		NO	Go to step 6.

Step 6	Inspection items		Inspection of accelerator pedal position sensor (sensor 2) connector
	Maintenance item		Inspection of connector
	Inspection condition		–
	Requirements		• Connector is properly connected. • No trace of water entry is found. • No corrosion is found in terminal. • Connection to terminal is appropriate.
	Inspection result (Is the judging standard satisfied?)	YES	Go to step 7.
		NO	Modify connector.

Step 7	Inspection items		Inspection of harness between electronic control unit and accelerator pedal position sensor (sensor 2) (power supply)
	Maintenance item		Check circuit between accelerator pedal position sensor (sensor 2) connector terminal No. 4 and electronic control unit connector (GE58A) terminal No. 49
	Inspection condition		Disconnect each device from harness and measure from connection side of harness connector.
	Requirements		There is continuity.
	Inspection result (Is the judging standard satisfied?)	YES	Go to step 8.
		NO	Modify harness.

Step 8	Inspection items		Inspection by electronic control unit connector: fuel temperature sensor
	Maintenance item		Measure value of voltage between connector (GE96A) terminal No. 89 (+) and No. 65 (–).
	Inspection condition		• Measure from back side of connector of harness with each device connected to harness. • Starter switch: ON
	Requirements		5 V
	Inspection result (Is the judging standard satisfied?)	YES	Go to transient fault (See Gr00.).
		NO	Go to step 9.

Step 9	Inspection items		Inspection of fuel temperature sensor connector
	Maintenance item		Inspection of connector
	Inspection condition		–
	Requirements		• Connector is properly connected. • No trace of water entry is found. • No corrosion is found in terminal. • Connection to terminal is appropriate.
	Inspection result (Is the judging standard satisfied?)	YES	Go to step 10.
		NO	Modify connector.

Step 10	Inspection items		Inspection of harness between electronic control unit and fuel temperature sensor (power supply)
	Maintenance item		Check circuit between fuel temperature sensor connector terminal No. 1 and electronic control unit connector (GE96A) terminal No. 89
	Inspection condition		Disconnect each device from harness and measure from connection side of harness connector.
	Requirements		There is continuity.
	Inspection result (Is the judging standard satisfied?)	YES	Replacement of electronic control unit
		NO	Modify harness.

[Fault code]
Diagnosis code: P0657/Flash code: 79
[Monitor]
Abnormality of magnetic valve power supply
[Fault (outline)]
Short circuit ground
[Diagnosis check]
- Exhaust shutter 2-way magnetic valve circuit is monitored for fault.

[Code generation condition]
- Exhaust shutter 2-way magnetic valve circuit remains shorted to ground as detected for 0.5 second.
  (Warning lamp is lit and diagnosis code is displayed on first establishment of code generation condition.)

[Diagnosis check timing]
- Fault diagnosis is continuously performed during the driving cycle.

[Diagnostic requirement]
–

[Control effected by electronic control unit during fault]
- Exhaust shutter 2-way magnetic valve is turned off.

[Probable cause of trouble]
- Open-circuit or short-circuit of harness between electronic control unit and exhaust shutter 2-way magnetic valve
- Malfunction of each connector
- Malfunction of exhaust shutter 2-way magnetic valve
- Malfunction of electronic control unit

[Recoverability]
- Recovered if signal becomes normal when starter switch is turned OFF to ON (power supply resumed to electronic control unit).
  (Warning lamp is extinguished and diagnosis code is cleared simultaneously with recovery.)

[Electronic Control Unit Connection Diagram]

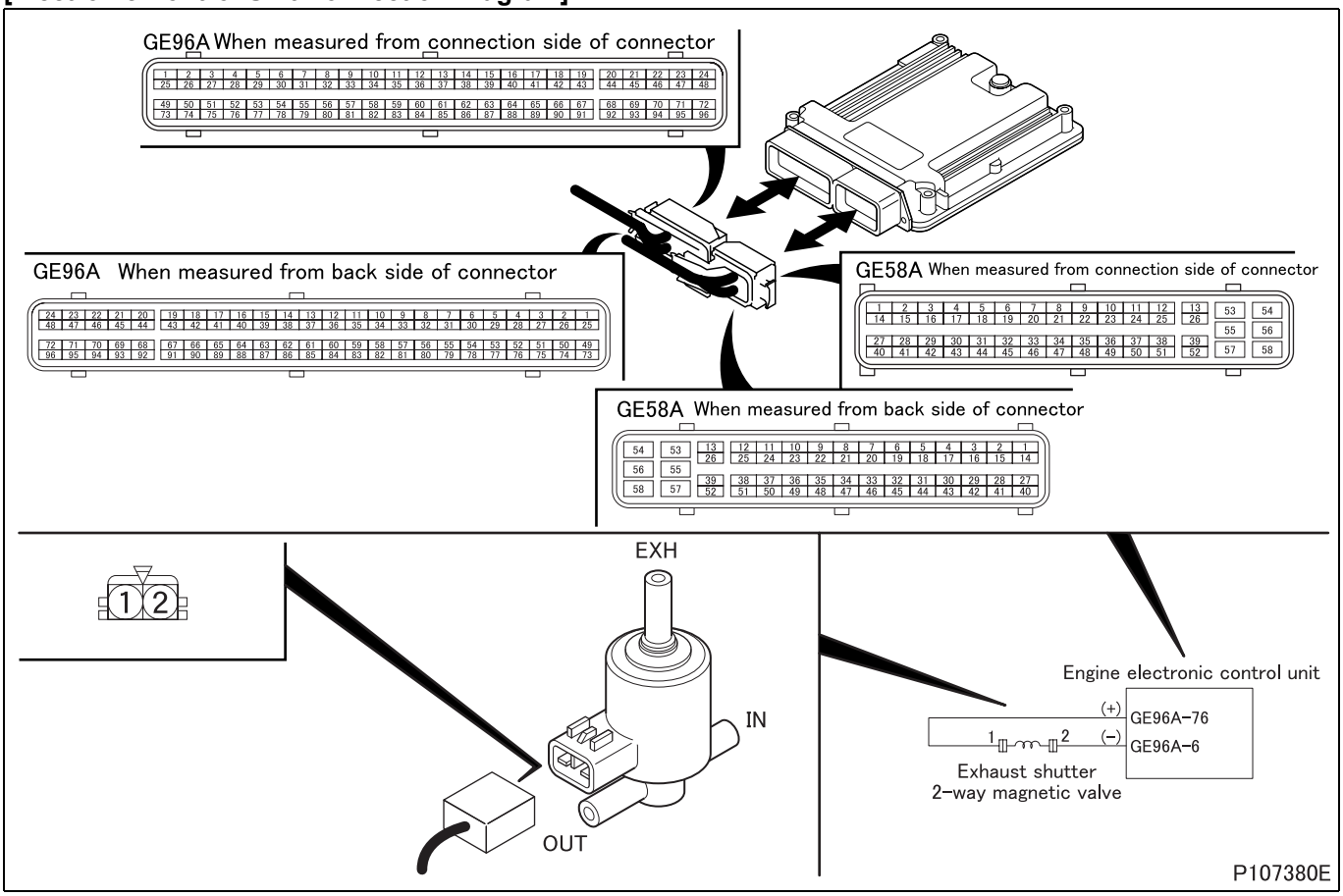

[Parts Identification and Location]

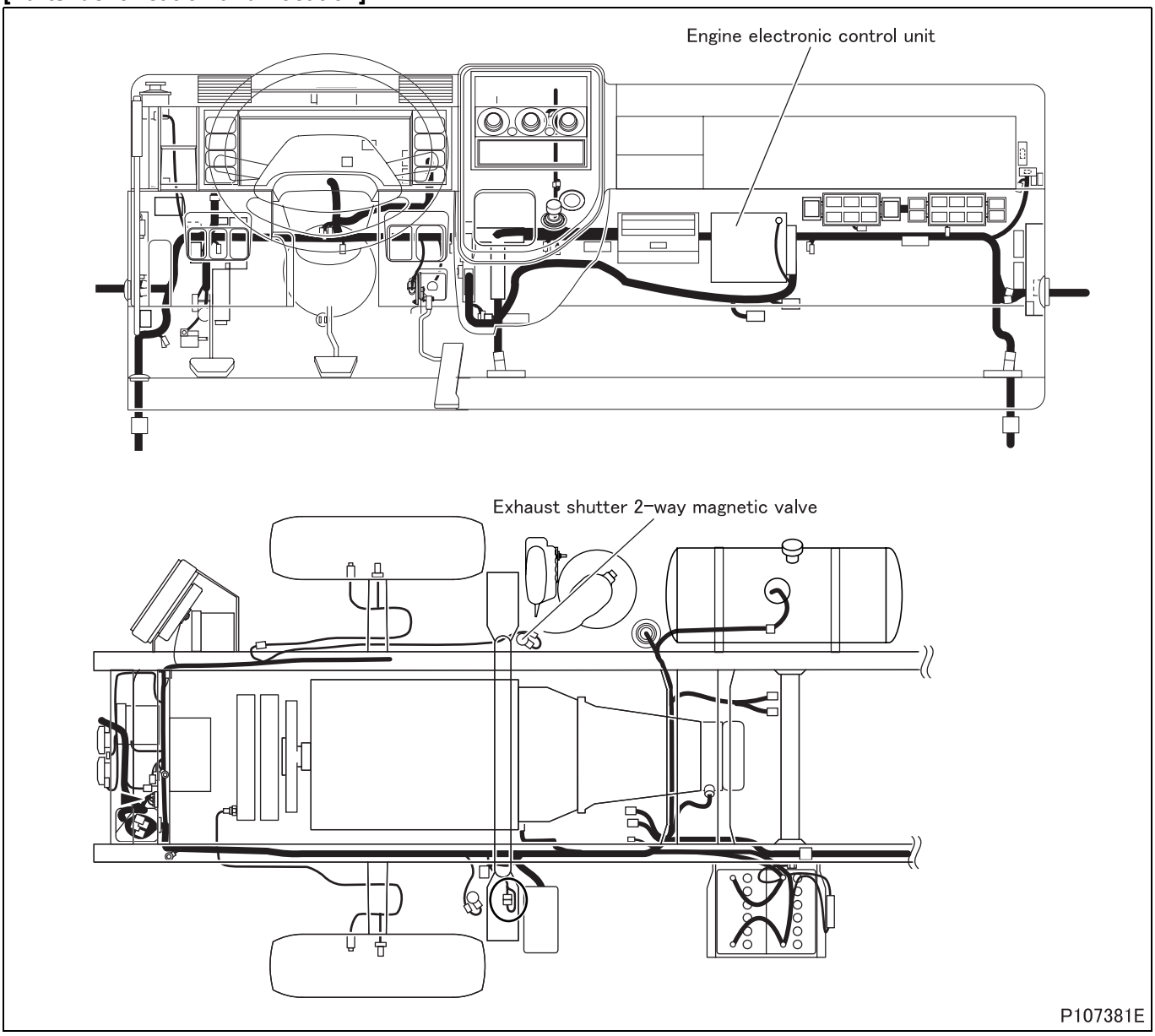

[Fault diagnosis]

- Perform checks in the sequence of the following steps.

Step 1	Inspection items		Inspection by electronic control unit connector
	Maintenance item		Measure value of resistance between connector (GE96A) terminal No. 6 and 76.
	Inspection condition		Disconnect electronic control unit from harness and measure from connection side of harness connector.
	Requirements		48 Ω or more
	Inspection result (Is the judging standard satisfied?)	YES	Go to step 8.
		NO	Go to step 2.

Step 2	Inspection items		Inspection of electronic control unit connector
	Maintenance item		Inspection of connector
	Inspection condition		–
	Requirements		• Connector is properly connected. • No trace of water entry is found. • No corrosion is found in terminal. • Connection to terminal is appropriate.
	Inspection result (Is the judging standard satisfied?)	YES	Go to step 3.
		NO	Modify connector.

Step 3	Inspection items		Inspection of 2-way magnetic valve connector
	Maintenance item		Inspection of connector
	Inspection condition		–
	Requirements		• Connector is properly connected. • No trace of water entry is found. • No corrosion is found in terminal. • Connection to terminal is appropriate.
	Inspection result (Is the judging standard satisfied?)	YES	Go to step 4.
		NO	Modify connector.

Step 4	Inspection items		Inspection of 2-way magnetic valve unit
	Maintenance item		Measure minimum operating voltage when 2-way magnetic valve operates (judge by operation sound).
	Inspection condition		Gradually increase from zero the voltage applied to terminals No. 1 (+) and 2 (–).
	Requirements		11 V or less
	Inspection result (Is the judging standard satisfied?)	YES	Go to step 5.
		NO	Replacement of 2-way magnetic valve

<Step 4 inspection diagram>

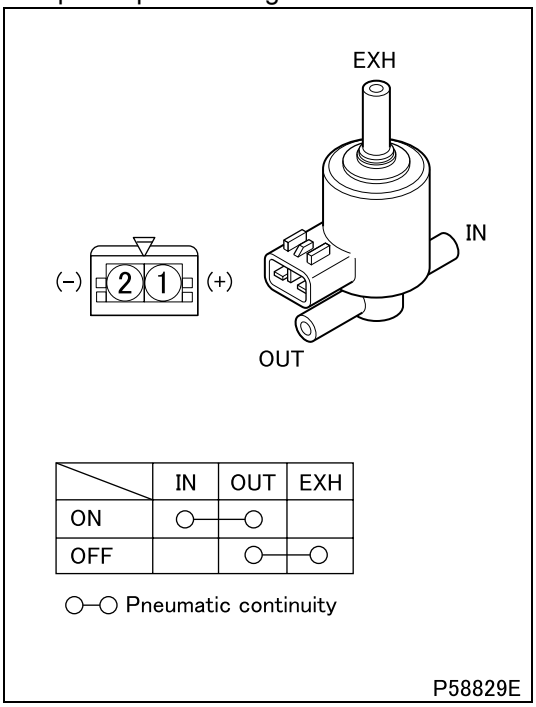

Step 5	Inspection items		Inspection of harness between exhaust shutter 2-way magnetic valve and electronic control unit (power supply)
	Maintenance item		Check circuit between exhaust shutter 2-way magnetic valve connector terminal No. 1 and electronic control unit connector (GE96A) terminal No. 76.
	Inspection condition		Disconnect each device from harness and measure from connection side of harness
	Requirements		There is continuity.
	Inspection result (Is the judging standard satisfied?)	YES	Go to step 6.
		NO	Modify harness.

Step 6	Inspection items		Inspection of harness between exhaust shutter 2-way magnetic valve and electronic control unit (power supply)
	Maintenance item		Check circuit between exhaust shutter 2-way magnetic valve connector terminal No. 1 and chassis ground
	Inspection condition		Disconnect each device from harness and measure from connection side of harness
	Requirements		There is no continuity.
	Inspection result (Is the judging standard satisfied?)	YES	Go to step 7.
		NO	Modify harness.

Step 7	Inspection items		Inspection of harness between exhaust shutter 2-way magnetic valve and electronic control unit (ground)
	Maintenance item		Check circuit between exhaust shutter 2-way magnetic valve connector terminal No. 2 and electronic control unit connector (GE96A) terminal No. 6.
	Inspection condition		Disconnect each device from harness and measure from connection side of harness
	Requirements		There is continuity.
	Inspection result (Is the judging standard satisfied?)	YES	Go to step 8.
		NO	Modify harness.

Step 8	Inspection items		Inspection by control data
	Maintenance item		Perform actuator test item No. AA “Auxiliary Brake M/V 1”.
	Inspection condition		Starter switch: ON
	Requirements		2-way magnetic valve operation sound is noted
	Inspection result (Is the judging standard satisfied?)	YES	Go to transient fault (See Gr00.).
		NO	Replacement of electronic control unit

[Fault code]
Diagnosis code: P0670/Flash code: 26
[Monitor]
Failure of preheating control system
[Fault (outline)]
- Open circuit
- Overload
- GCU communication error

[Diagnosis check]
- Engine electronic control unit receives fault information from glow electronic control unit.
- Glow electronic control unit monitors condition of electronic control unit.

[Code generation condition]
Diagnosis code is generated under either of the following conditions. (Warning lamp is lit and diagnosis code is displayed on third establishment of code generation condition.)
- Glow electronic control unit power supply circuit remains open as detected for 0.2 second.
- Power supply temperature in glow electronic control unit remains at 100°C {212°F} for 0.2 second.
- High current fuse (BATT2) directly connected to battery remains blown for 2.3 seconds.
- Glow plug drive terminal voltage remains below 8 V or over 18.5 V for 2.3 seconds when engine requires no warming-up.
- Upper limit temperature remains over 135°C {275°F} for 2.3 seconds.

[Diagnosis check timing]
<Fault diagnosis for PWM (Pulse Width Modulation)>
- Fault diagnosis is performed each time when the control is initiated.
- Fault diagnosis is performed each time when the control is halted.

<Fault diagnosis for other than those above>
- Fault diagnosis is continuously performed.

[Diagnostic requirement]
<Fault diagnosis for PWM (Pulse Width Modulation)>
- Preheating control: stopped
- Preheating control: being effected
- Water temperature: below 65°C {149°F}
- Preheating control: no other error occurs

<Fault diagnosis for other than those above>
- Not applicable.

[Control effected by electronic control unit during fault]
Electronic control unit varies in the way of control by the status of warning lamp.
<Warning lamp (orange) lit>
- Effects no special control.

<Warning lamp extinguished (diagnosis code only)>
- Related fault check is stopped.

[Probable cause of trouble]
- Open-circuit or short-circuit of harness between glow electronic control unit and high-current fuse (BATT2)
- Blown high-current fuse (BATT2)
- Malfunction of each connector
- Malfunction of glow electronic control unit

[Recoverability]
- Recovered if signal becomes normal with starter switch in ON position.
  (Warning lamp is extinguished and diagnosis code is cleared at fourth display of diagnosis code after recovery.)

[Electronic Control Unit Connection Diagram]

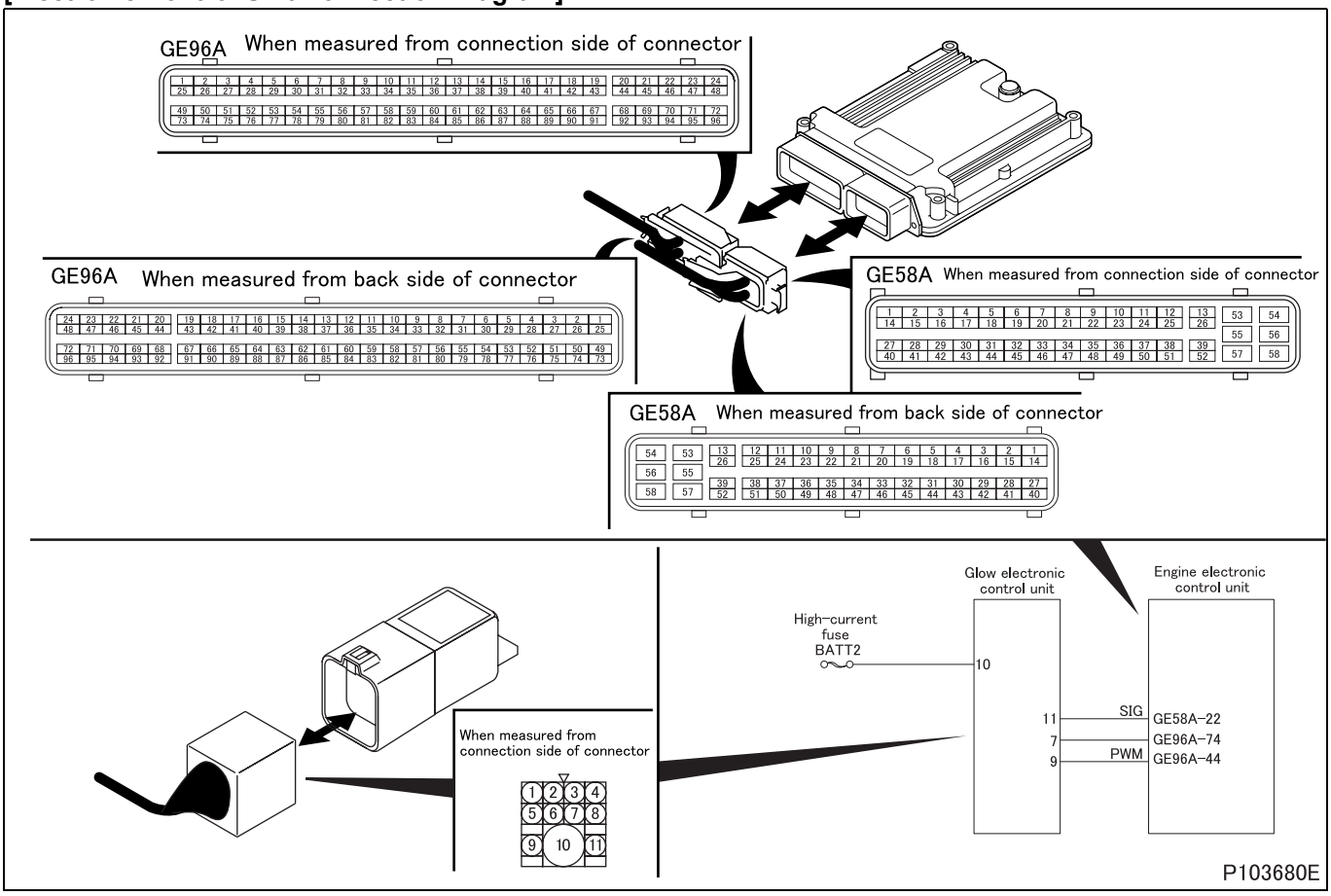

[Parts Identification and Location]

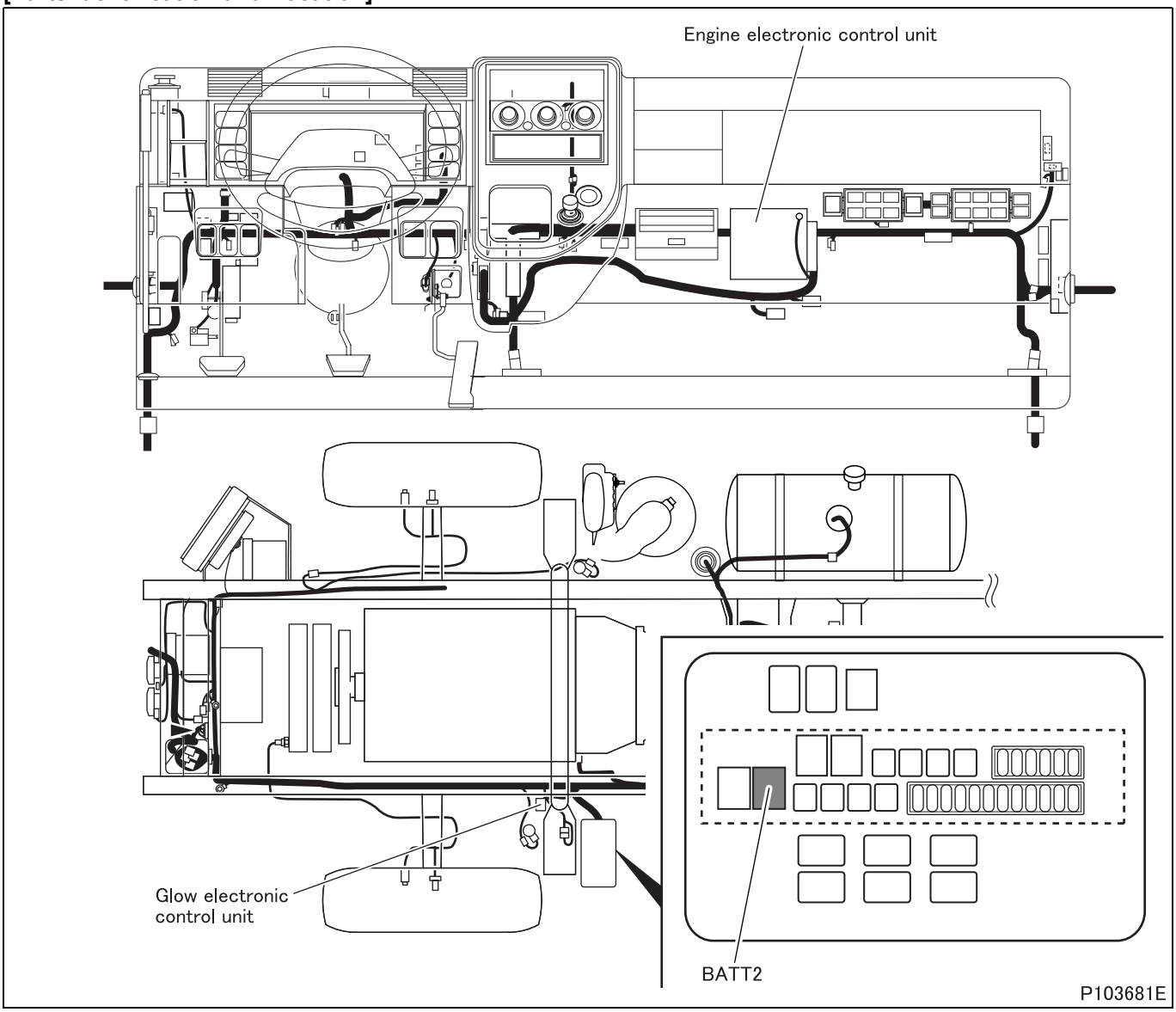

[Fault diagnosis]

- Perform checks in the sequence of the following steps.

Step 1	Inspection items		Inspection of high-current fuse (BATT2)
	Maintenance item		Check open circuit of high-current fuse (BATT2)
	Inspection condition		–
	Requirements		There is continuity.
	Inspection result (Is the judging standard satisfied?)	YES	Go to step 2.
		NO	Replacement of fuse

Step 2	Inspection items		Inspection of harness between glow electronic control unit and high-current fuse (BATT2)
	Maintenance item		Check circuit between glow electronic control unit terminal No. 10 and high-current fuse (BATT2) terminal.
	Inspection condition		Disconnect each device from harness and measure from connection side of harness connector.
	Requirements		There is continuity.
	Inspection result (Is the judging standard satisfied?)	YES	Go to step 3.
		NO	Modify harness.

Step 3	Inspection items		Inspection of battery
	Maintenance item		Measure value of voltage between battery terminal (+) and (–)
	Inspection condition		–
	Requirements		8 to 16 V
	Inspection result (Is the judging standard satisfied?)	YES	Go to step 4.
		NO	Inspection of battery (See Gr54.)

<Step 3 inspection diagram>

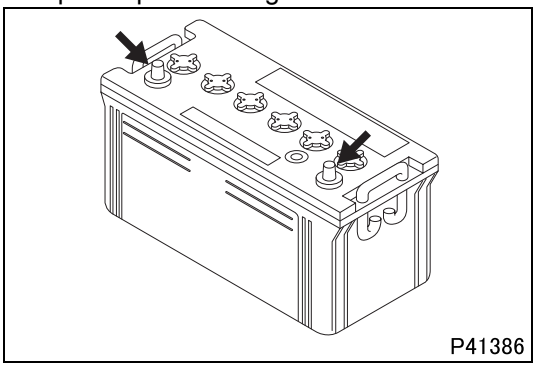

Step 4	Inspection items		Inspection of harness between glow electronic control unit and engine electronic control unit
	Maintenance item		Check circuit between following connector terminals. • Fault information circuit: glow electronic control unit terminal No. 11 - engine electronic control unit (GE58A) terminal No. 22 • Power supply circuit: glow electronic control unit terminal No. 7 - engine electronic control unit (GE96A) terminal No. 74 • Operating signal circuit: glow electronic control unit terminal No. 9 - engine electronic control unit (GE96A) terminal No. 44
	Inspection condition		Disconnect each device from harness and measure from connection side of harness connector.
	Requirements		There is continuity.
	Inspection result (Is the judging standard satisfied?)	YES	Go to step 5.
		NO	Modify harness.

Step 5	Inspection items		Inspection of glow electronic control unit connector
	Maintenance item		Inspection of connector
	Inspection condition		–
	Requirements		• Connector is properly connected. • No trace of water entry is found. • No corrosion is found in terminal. • Connection to terminal is appropriate.
	Inspection result (Is the judging standard satisfied?)	YES	After replacement of glow electronic control unit, go to step 6
		NO	Modify connector.

Step 6	Inspection items		Inspection of engine electronic control unit connector
	Maintenance item		Inspection of connector
	Inspection condition		–
	Requirements		• Connector is properly connected. • No trace of water entry is found. • No corrosion is found in terminal. • Connection to terminal is appropriate.
	Inspection result (Is the judging standard satisfied?)	YES	Replacement of engine electronic control unit
		NO	Modify connector.

[Fault code]
Diagnosis code: P0671/Flash code: 26
[Monitor]
Failure of preheating control system
[Fault (outline)]
No. 1 cylinder fault
[Diagnosis check]
- Engine electronic control unit receives fault information from glow electronic control unit.
- Glow electronic control unit monitors current in No. 1 cylinder glow plug circuit for open or short circuit failure.

[Code generation condition]
Diagnosis code is generated under either of the following conditions.
<Open-circuit>
- Current remains below 1.9 A for 2.3 seconds.
  (Warning lamp is lit and diagnosis code is displayed on third establishment of code generation condition.)

<Short-circuit>
- Current remains over 21 A for 2.3 seconds.
  (Warning lamp is lit and diagnosis code is displayed on third establishment of code generation condition.)

[Diagnosis check timing]
- Fault diagnosis is performed each time when the control is initiated.

[Diagnostic requirement]
- Glow electronic control unit operating voltage: higher than 8 V

[Control effected by electronic control unit during fault]
- Effects no special control.

[Probable cause of trouble]
- Open-circuit or short-circuit of harness between glow electronic control unit and glow plug
- Malfunction of each connector
- Malfunction of glow plug
- Malfunction of glow electronic control unit

[Recoverability]
- Recovered if signal becomes normal with starter switch in ON position.
  (Warning lamp is extinguished and diagnosis code is cleared at fourth display of diagnosis code after recovery.)

[Electronic Control Unit Connection Diagram]

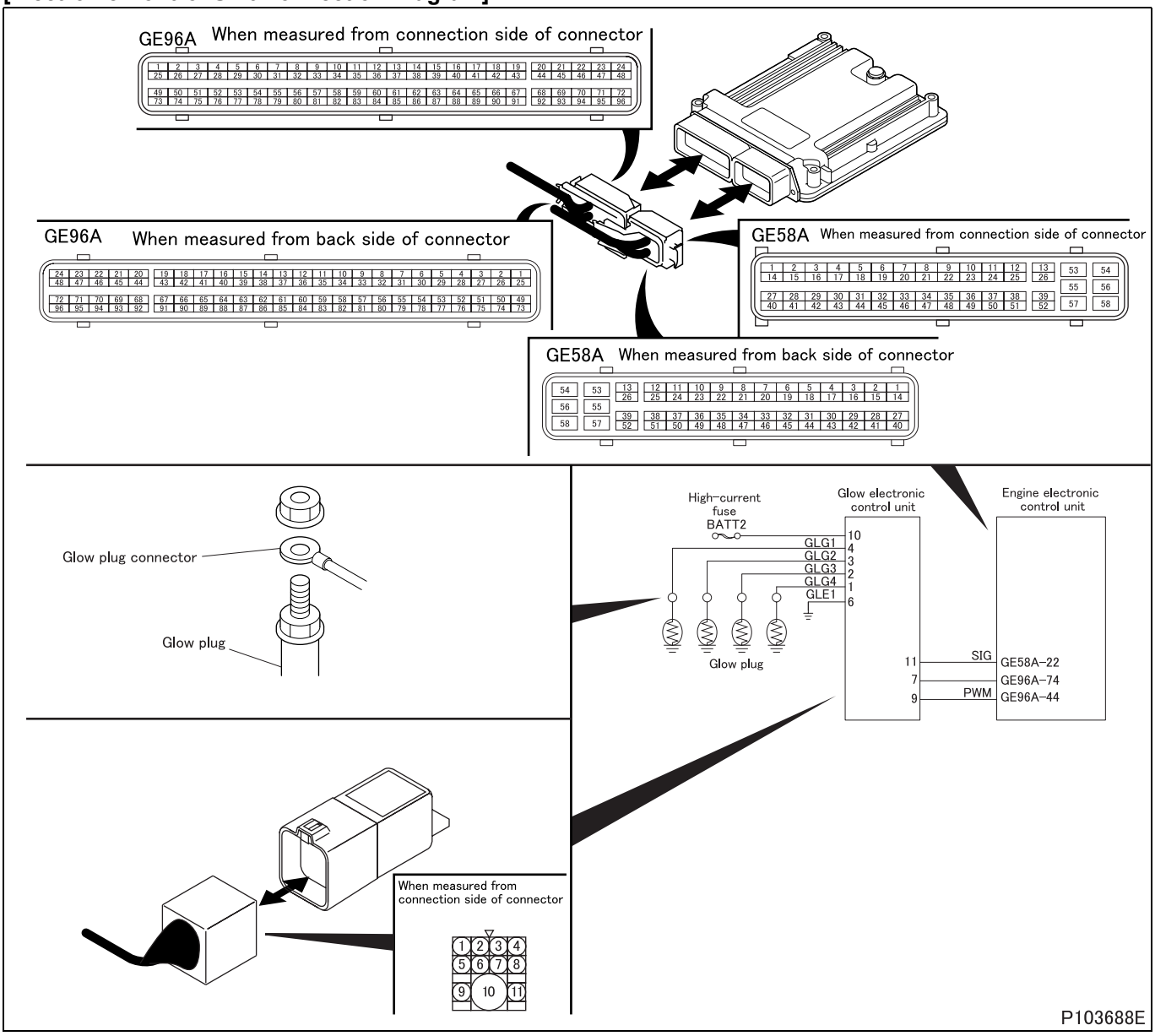

[Parts Identification and Location]

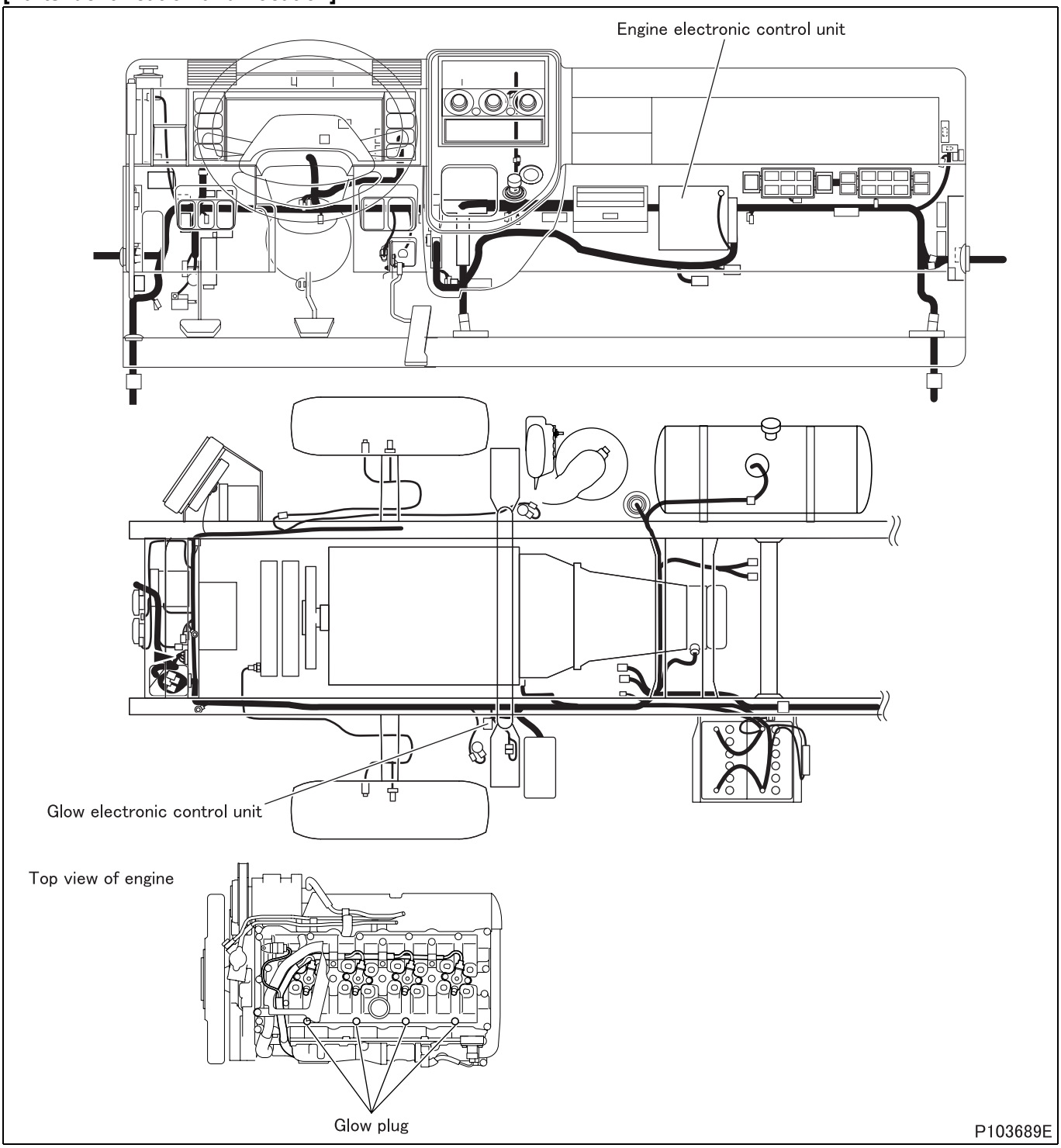

[Fault diagnosis]

- Perform checks in the sequence of the following steps.

Step 1	Inspection items		Inspection of harness between glow electronic control unit and chassis ground
	Maintenance item		Check circuit between glow electronic control unit terminal No. 4 and chassis ground
	Inspection condition		Disconnect each device from harness and measure from connection side of harness connector.
	Requirements		There is continuity.
	Inspection result (Is the judging standard satisfied?)	YES	Go to transient fault (See Gr00.).
		NO	Go to step 2.

Step 2	Inspection items		Inspection of harness between glow electronic control unit and glow plug
	Maintenance item		Check circuit between glow electronic control unit terminal No. 4 and glow plug connector (for No. 1 cylinder)
	Inspection condition		Disconnect each device from harness and measure from connection side of harness connector.
	Requirements		There is continuity.
	Inspection result (Is the judging standard satisfied?)	YES	Go to step 3.
		NO	Modify harness.

Step 3	Inspection items		Inspection of glow plug unit
	Maintenance item		Measure value of resistance of glow plug as shown in inspection diagram.
	Inspection condition		–
	Requirements		1 Ω
	Inspection result (Is the judging standard satisfied?)	YES	Go to step 4.
		NO	Replacement of glow plug

<Step 3 inspection diagram>

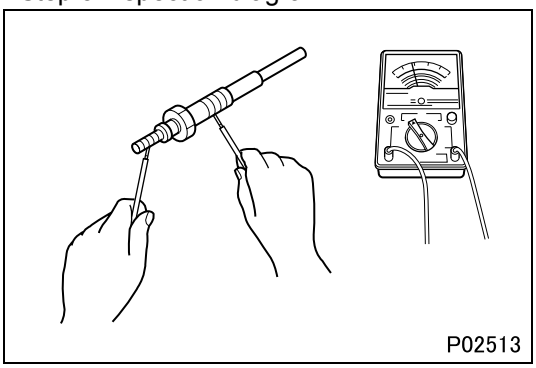

Step 4	Inspection items		Inspection of harness between glow electronic control unit and engine electronic control unit
	Maintenance item		Check circuit between following connector terminals. • Fault information circuit: glow electronic control unit terminal No. 11 - engine electronic control unit (GE58A) terminal No. 22 • Power supply circuit: glow electronic control unit terminal No. 7 - engine electronic control unit (GE96A) terminal No. 74 • Operating signal circuit: glow electronic control unit terminal No. 9 - engine electronic control unit (GE96A) terminal No. 44
	Inspection condition		Disconnect each device from harness and measure from connection side of harness connector.
	Requirements		There is continuity.
	Inspection result (Is the judging standard satisfied?)	YES	Go to step 5.
		NO	Modify harness.

Step 5	Inspection items		Inspection of glow electronic control unit connector
	Maintenance item		Inspection of connector
	Inspection condition		–
	Requirements		• Connector is properly connected. • No trace of water entry is found. • No corrosion is found in terminal. • Connection to terminal is appropriate.
	Inspection result (Is the judging standard satisfied?)	YES	After replacement of glow electronic control unit, go to step 6
		NO	Modify connector.

Step 6	Inspection items		Inspection of engine electronic control unit connector
	Maintenance item		Inspection of connector
	Inspection condition		–
	Requirements		• Connector is properly connected. • No trace of water entry is found. • No corrosion is found in terminal. • Connection to terminal is appropriate.
	Inspection result (Is the judging standard satisfied?)	YES	Replacement of engine electronic control unit
		NO	Modify connector.

[Fault code]
Diagnosis code: P0672/Flash code: 26
[Monitor]
Failure of preheating control system
[Fault (outline)]
No. 2 cylinder fault
[Diagnosis check]
- Engine electronic control unit receives fault information from glow electronic control unit.
- Glow electronic control unit monitors current in No. 2 cylinder glow plug circuit for open or short circuit failure.

[Code generation condition]
Diagnosis code is generated under either of the following conditions. (Warning lamp is lit and diagnosis code is displayed on third establishment of code generation condition.)
<Open-circuit>
- Current remains below 1.9 A for 2.3 seconds.

<Short-circuit>
- Current remains over 21 A for 2.3 seconds.

[Diagnosis check timing]
- Fault diagnosis is performed each time when the control is initiated.

[Diagnostic requirement]
- Glow electronic control unit operating voltage: higher than 8 V

[Control effected by electronic control unit during fault]
- Effects no special control.

[Probable cause of trouble]
- Open-circuit or short-circuit of harness between glow electronic control unit and glow plug
- Malfunction of each connector
- Malfunction of glow plug
- Malfunction of glow electronic control unit

[Recoverability]
- Recovered if signal becomes normal with starter switch in ON position.
  (Warning lamp is extinguished and diagnosis code is cleared at fourth display of diagnosis code after recovery.)

[Electronic Control Unit Connection Diagram]

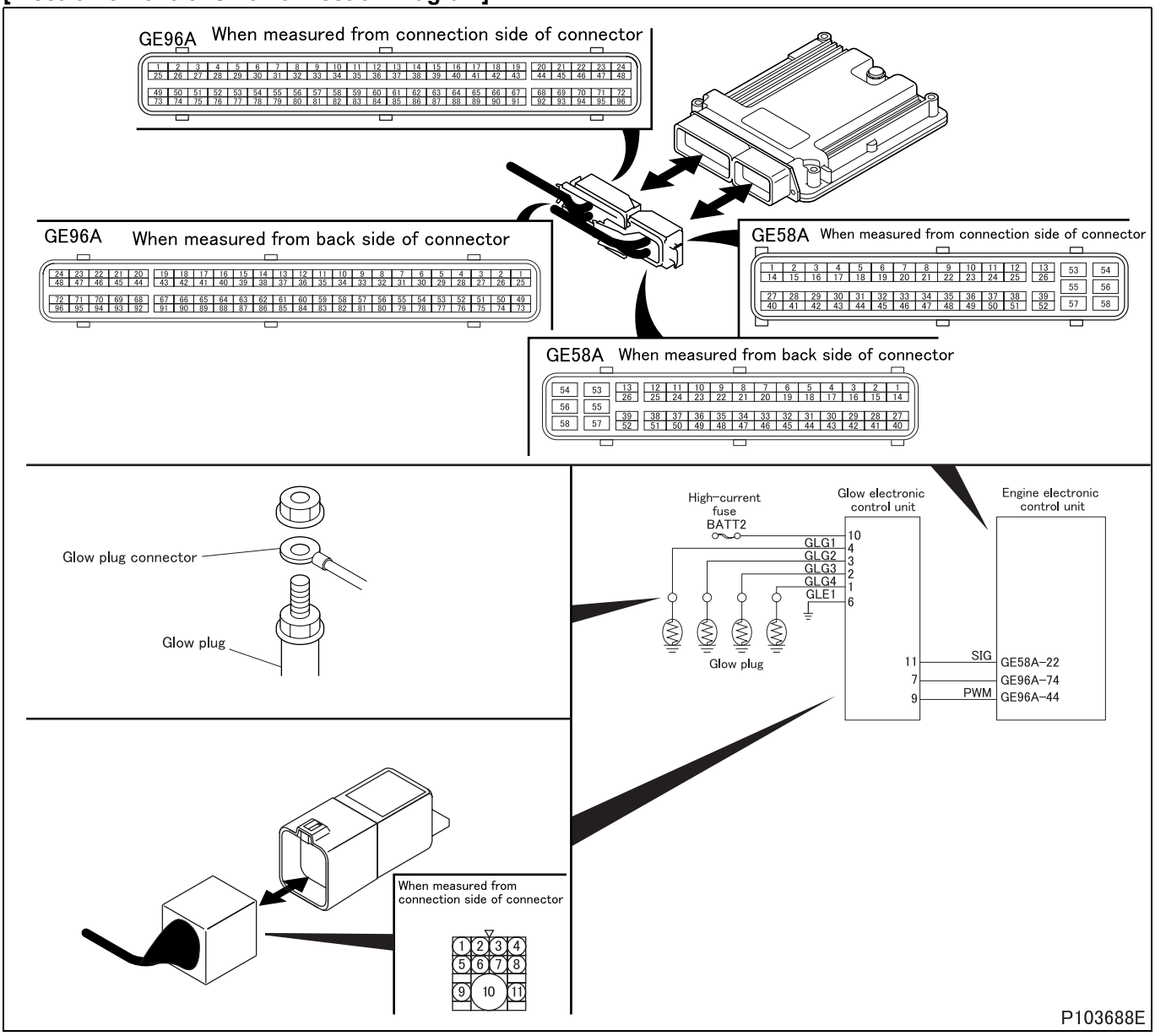

[Parts Identification and Location]

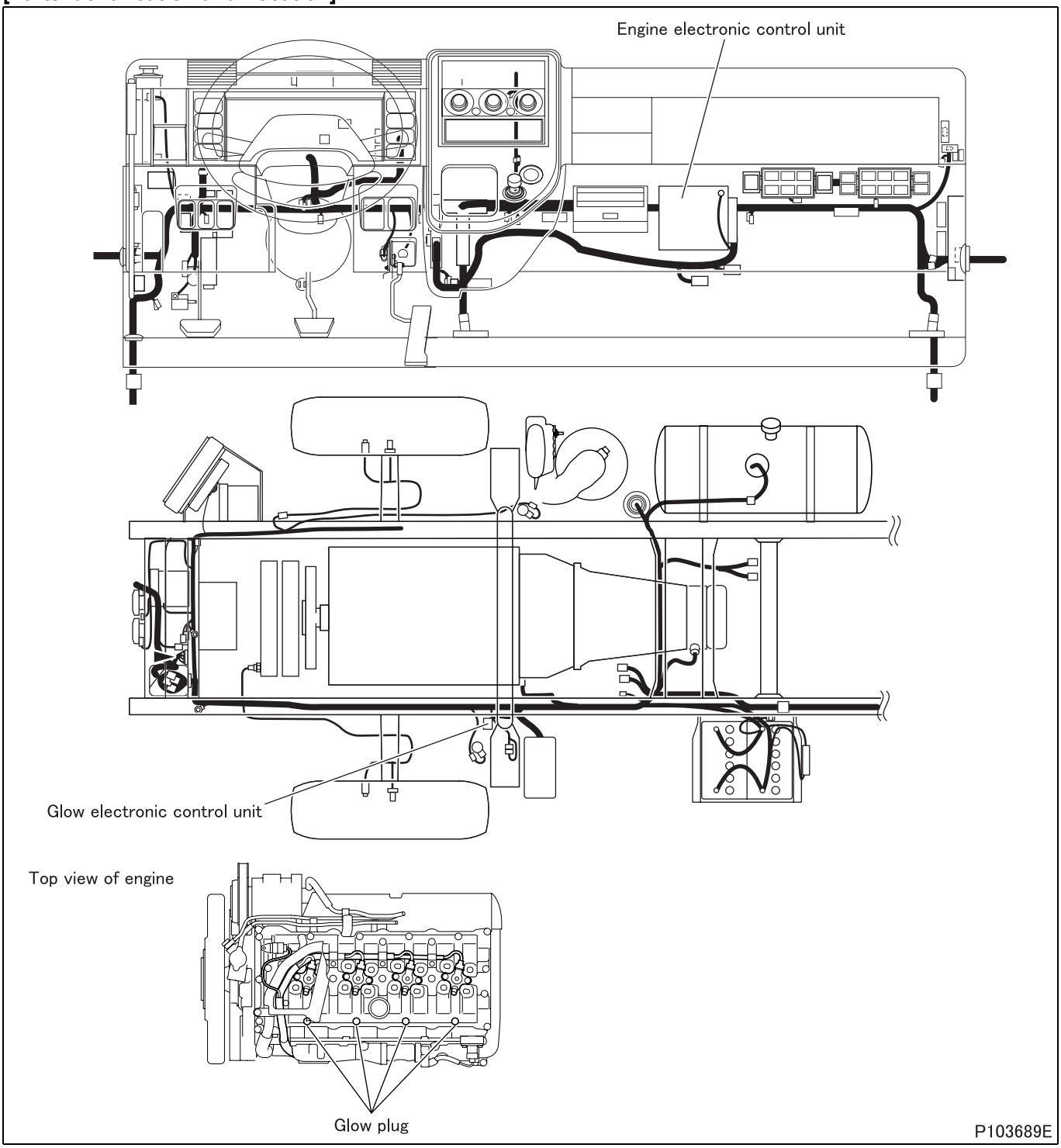

[Fault diagnosis]

- Perform checks in the sequence of the following steps.

Step 1	Inspection items		Inspection of harness between glow electronic control unit and chassis ground
	Maintenance item		Check circuit between glow electronic control unit terminal No. 3 and chassis ground
	Inspection condition		Disconnect each device from harness and measure from connection side of harness connector.
	Requirements		There is continuity.
	Inspection result (Is the judging standard satisfied?)	YES	Go to transient fault (See Gr00.).
		NO	Go to step 2.

Step 2	Inspection items		Inspection of harness between glow electronic control unit and glow plug
	Maintenance item		Check circuit between glow electronic control unit terminal No. 3 and glow plug connector (for No. 2 cylinder)
	Inspection condition		Disconnect each device from harness and measure from connection side of harness connector.
	Requirements		There is continuity.
	Inspection result (Is the judging standard satisfied?)	YES	Go to step 3.
		NO	Modify harness.

Step 3	Inspection items		Inspection of glow plug unit
	Maintenance item		Measure value of resistance of glow plug as shown in inspection diagram.
	Inspection condition		–
	Requirements		1 Ω
	Inspection result (Is the judging standard satisfied?)	YES	Go to step 4.
		NO	Replacement of glow plug

<Step 3 inspection diagram>

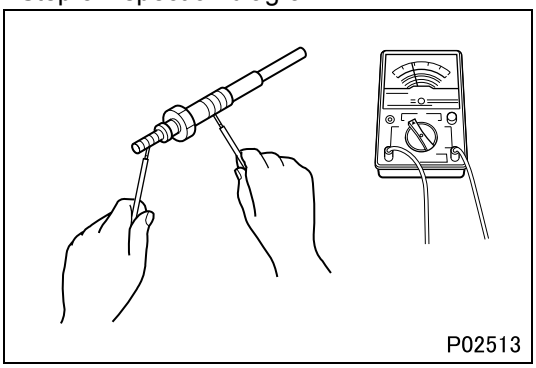

Step 4	Inspection items		Inspection of harness between glow electronic control unit and engine electronic control unit
	Maintenance item		Check circuit between following connector terminals. • Fault information circuit: glow electronic control unit terminal No. 11 - engine electronic control unit (GE58A) terminal No. 22 • Power supply circuit: glow electronic control unit terminal No. 7 - engine electronic control unit (GE96A) terminal No. 74 • Operating signal circuit: glow electronic control unit terminal No. 9 - engine electronic control unit (GE96A) terminal No. 44
	Inspection condition		Disconnect each device from harness and measure from connection side of harness connector.
	Requirements		There is continuity.
	Inspection result (Is the judging standard satisfied?)	YES	Go to step 5.
		NO	Modify harness.

Step 5	Inspection items		Inspection of glow electronic control unit connector
	Maintenance item		Inspection of connector
	Inspection condition		–
	Requirements		• Connector is properly connected. • No trace of water entry is found. • No corrosion is found in terminal. • Connection to terminal is appropriate.
	Inspection result (Is the judging standard satisfied?)	YES	After replacement of glow electronic control unit, go to step 6
		NO	Modify connector.

Step 6	Inspection items		Inspection of engine electronic control unit connector
	Maintenance item		Inspection of connector
	Inspection condition		–
	Requirements		• Connector is properly connected. • No trace of water entry is found. • No corrosion is found in terminal. • Connection to terminal is appropriate.
	Inspection result (Is the judging standard satisfied?)	YES	Replacement of engine electronic control unit
		NO	Modify connector.

[Fault code]
Diagnosis code: P0673/Flash code: 26
[Monitor]
Failure of preheating control system
[Fault (outline)]
No. 3 cylinder fault
[Diagnosis check]
- Engine electronic control unit receives fault information from glow electronic control unit.
- Glow electronic control unit monitors current in No. 3 cylinder glow plug circuit for open or short circuit failure.

[Code generation condition]
Diagnosis code is generated under either of the following conditions. (Warning lamp is lit and diagnosis code is displayed on third establishment of code generation condition.)
<Open-circuit>
- Current remains below 1.9 A for 2.3 seconds.

<Short-circuit>
- Current remains over 21 A for 2.3 seconds.

[Diagnosis check timing]
- Fault diagnosis is performed each time when the control is initiated.

[Diagnostic requirement]
- Glow electronic control unit operating voltage: higher than 8 V

[Control effected by electronic control unit during fault]
- Effects no special control.

[Probable cause of trouble]
- Open-circuit or short-circuit of harness between glow electronic control unit and glow plug
- Malfunction of each connector
- Malfunction of glow plug
- Malfunction of glow electronic control unit

[Recoverability]
- Recovered if signal becomes normal with starter switch in ON position.
  (Warning lamp is extinguished and diagnosis code is cleared at fourth display of diagnosis code after recovery.)

[Electronic Control Unit Connection Diagram]

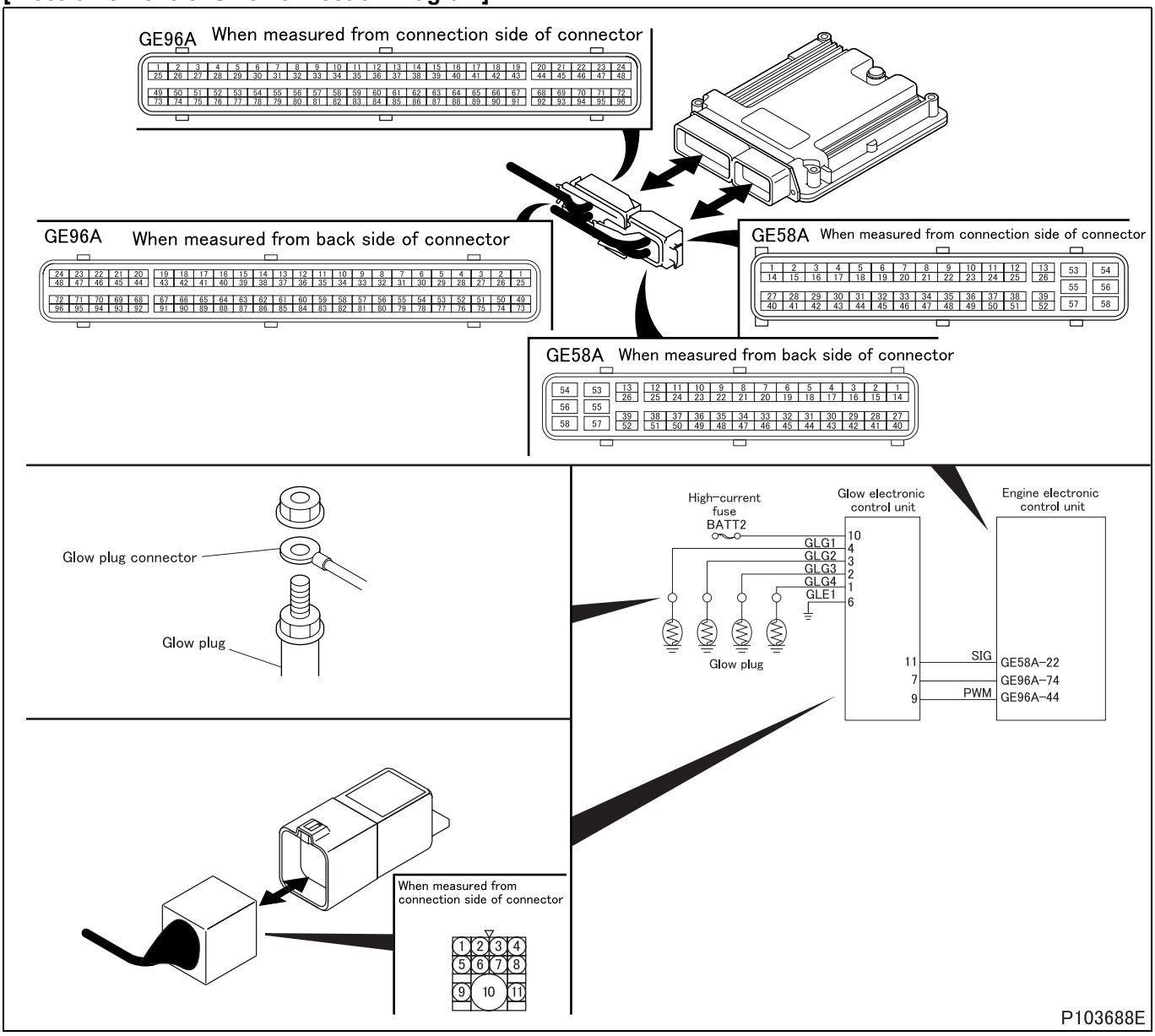

[Parts Identification and Location]

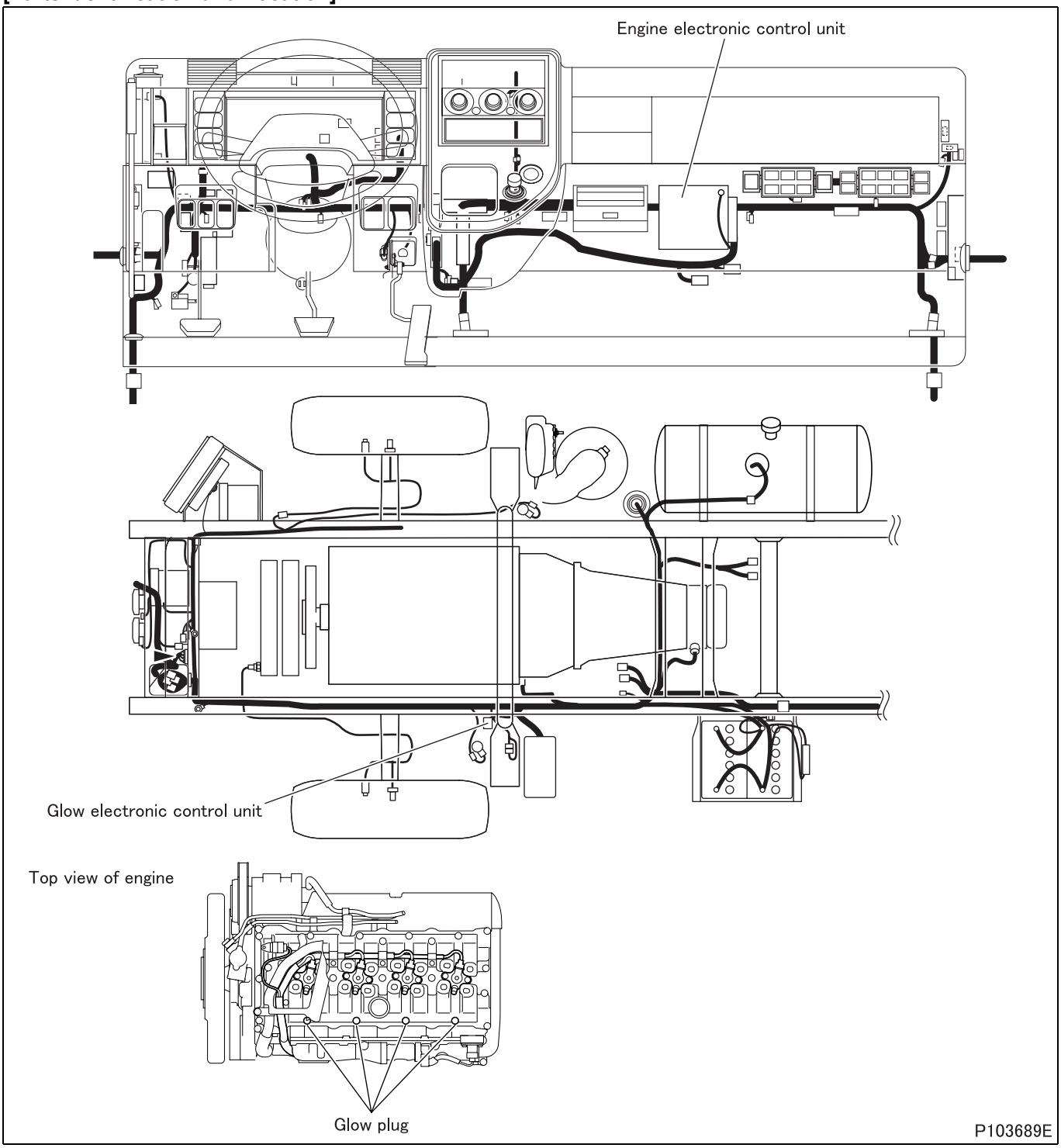

[Fault diagnosis]

- Perform checks in the sequence of the following steps.

Step 1	Inspection items		Inspection of harness between glow electronic control unit and chassis ground
	Maintenance item		Check circuit between glow electronic control unit terminal No. 2 and chassis ground
	Inspection condition		Disconnect each device from harness and measure from connection side of harness connector.
	Requirements		There is continuity.
	Inspection result (Is the judging standard satisfied?)	YES	Go to transient fault (See Gr00.).
		NO	Go to step 2.

Step 2	Inspection items		Inspection of harness between glow electronic control unit and glow plug
	Maintenance item		Check circuit between glow electronic control unit terminal No. 2 and glow plug connector (for No. 3 cylinder)
	Inspection condition		Disconnect each device from harness and measure from connection side of harness connector.
	Requirements		There is continuity.
	Inspection result (Is the judging standard satisfied?)	YES	Go to step 3.
		NO	Modify harness.

Step 3	Inspection items		Inspection of glow plug unit
	Maintenance item		Measure value of resistance of glow plug as shown in inspection diagram.
	Inspection condition		–
	Requirements		1 Ω
	Inspection result (Is the judging standard satisfied?)	YES	Go to step 4.
		NO	Replacement of glow plug

<Step 3 inspection diagram>

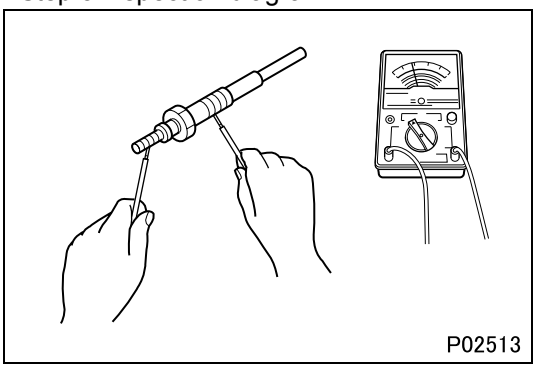

Step 4	Inspection items		Inspection of harness between glow electronic control unit and engine electronic control unit
	Maintenance item		Check circuit between following connector terminals. • Fault information circuit: glow electronic control unit terminal No. 11 - engine electronic control unit (GE58A) terminal No. 22 • Power supply circuit: glow electronic control unit terminal No. 7 - engine electronic control unit (GE96A) terminal No. 74 • Operating signal circuit: glow electronic control unit terminal No. 9 - engine electronic control unit (GE96A) terminal No. 44
	Inspection condition		Disconnect each device from harness and measure from connection side of harness connector.
	Requirements		There is continuity.
	Inspection result (Is the judging standard satisfied?)	YES	Go to step 5.
		NO	Modify harness.

Step 5	Inspection items		Inspection of glow electronic control unit connector
	Maintenance item		Inspection of connector
	Inspection condition		–
	Requirements		• Connector is properly connected. • No trace of water entry is found. • No corrosion is found in terminal. • Connection to terminal is appropriate.
	Inspection result (Is the judging standard satisfied?)	YES	After replacement of glow electronic control unit, go to step 6
		NO	Modify connector.

Step 6	Inspection items		Inspection of engine electronic control unit connector
	Maintenance item		Inspection of connector
	Inspection condition		–
	Requirements		• Connector is properly connected. • No trace of water entry is found. • No corrosion is found in terminal. • Connection to terminal is appropriate.
	Inspection result (Is the judging standard satisfied?)	YES	Replacement of engine electronic control unit
		NO	Modify connector.

[Fault code]
Diagnosis code: P0674/Flash code: 26
[Monitor]
Failure of preheating control system
[Fault (outline)]
No. 4 cylinder fault
[Diagnosis check]
- Engine electronic control unit receives fault information from glow electronic control unit.
- Glow electronic control unit monitors current in No. 4 cylinder glow plug circuit for open or short circuit failure.

[Code generation condition]
Diagnosis code is generated under either of the following conditions. (Warning lamp is lit and diagnosis code is displayed on third establishment of code generation condition.)
<Open-circuit>
- Current remains below 1.9 A for 2.3 seconds.

<Short-circuit>
- Current remains over 21 A for 2.3 seconds.

[Diagnosis check timing]
- Fault diagnosis is performed each time when the control is initiated.

[Diagnostic requirement]
- Glow electronic control unit operating voltage: higher than 8 V

[Control effected by electronic control unit during fault]
- Effects no special control.

[Probable cause of trouble]
- Open-circuit or short-circuit of harness between glow electronic control unit and glow plug
- Malfunction of each connector
- Malfunction of glow plug
- Malfunction of glow electronic control unit

[Recoverability]
- Recovered if signal becomes normal with starter switch in ON position.
  (Warning lamp is extinguished and diagnosis code is cleared at fourth display of diagnosis code after recovery.)

[Electronic Control Unit Connection Diagram]

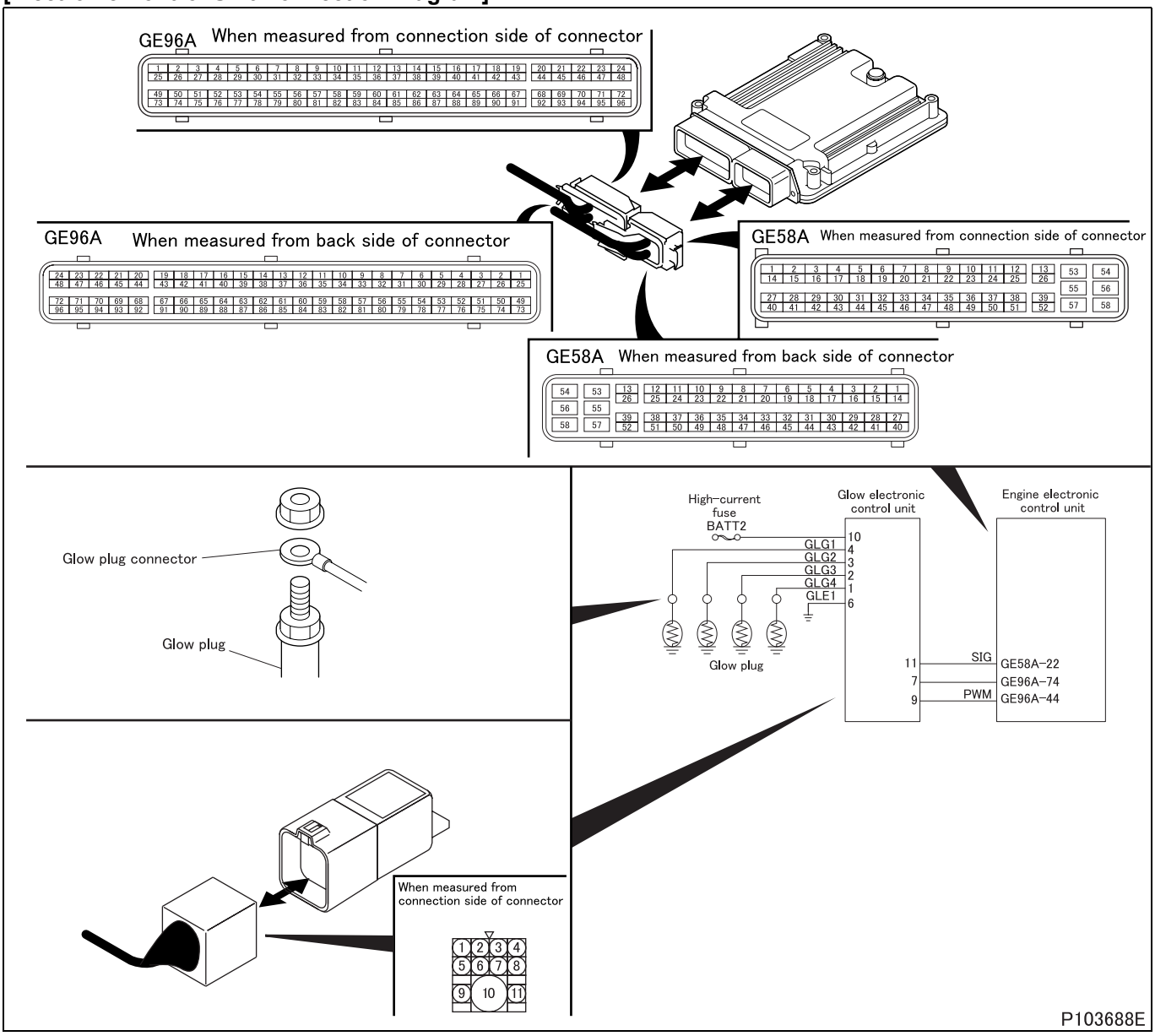

[Parts Identification and Location]

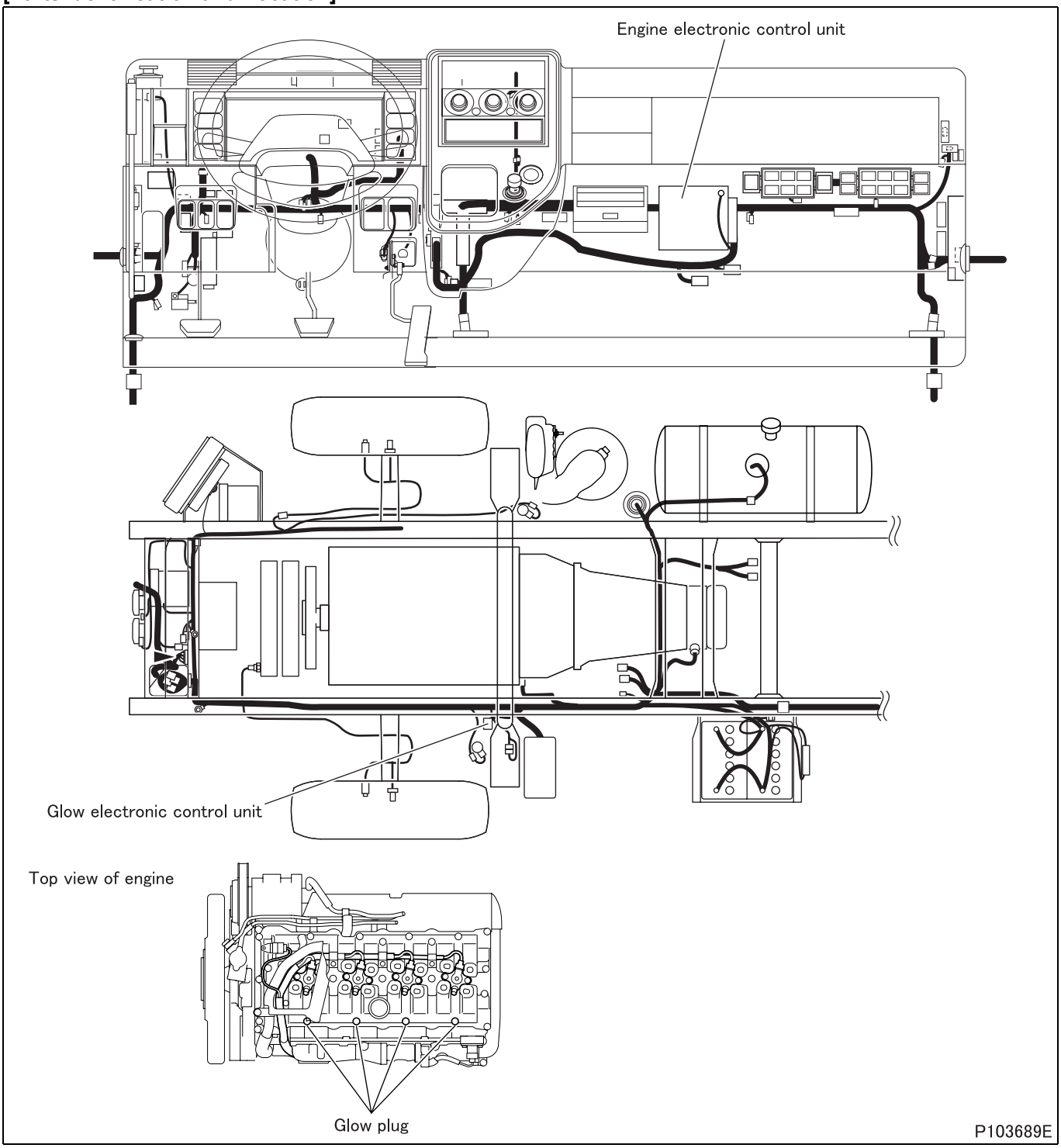

[Fault diagnosis]

- Perform checks in the sequence of the following steps.

Step 1	Inspection items		Inspection of harness between glow electronic control unit and chassis ground
	Maintenance item		Check circuit between glow electronic control unit terminal No. 1 and chassis ground
	Inspection condition		Disconnect each device from harness and measure from connection side of harness connector.
	Requirements		There is continuity.
	Inspection result (Is the judging standard satisfied?)	YES	Go to transient fault (See Gr00.).
		NO	Go to step 2.

Step 2	Inspection items		Inspection of harness between glow electronic control unit and glow plug
	Maintenance item		Check circuit between glow electronic control unit terminal No. 1 and glow plug connector (for No. 4 cylinder)
	Inspection condition		Disconnect each device from harness and measure from connection side of harness connector.
	Requirements		There is continuity.
	Inspection result (Is the judging standard satisfied?)	YES	Go to step 3.
		NO	Modify harness.

Step 3	Inspection items		Inspection of glow plug unit
	Maintenance item		Measure value of resistance of glow plug as shown in inspection diagram.
	Inspection condition		–
	Requirements		1 Ω
	Inspection result (Is the judging standard satisfied?)	YES	Go to step 4.
		NO	Replacement of glow plug

<Step 3 inspection diagram>

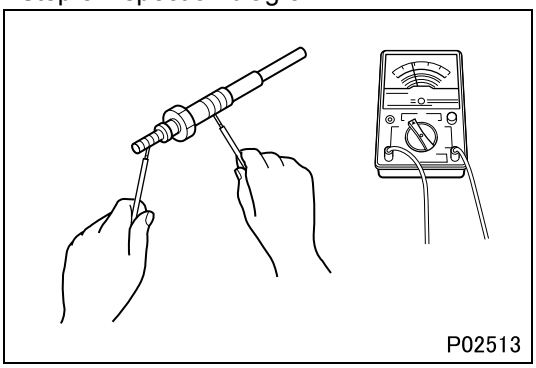

Step 4	Inspection items		Inspection of harness between glow electronic control unit and engine electronic control unit
	Maintenance item		Check circuit between following connector terminals. • Fault information circuit: glow electronic control unit terminal No. 11 - engine electronic control unit (GE58A) terminal No. 22 • Power supply circuit: glow electronic control unit terminal No. 7 - engine electronic control unit (GE96A) terminal No. 74 • Operating signal circuit: glow electronic control unit terminal No. 9 - engine electronic control unit (GE96A) terminal No. 44
	Inspection condition		Disconnect each device from harness and measure from connection side of harness connector.
	Requirements		There is continuity.
	Inspection result (Is the judging standard satisfied?)	YES	Go to step 5.
		NO	Modify harness.

Step 5	Inspection items		Inspection of glow electronic control unit connector
	Maintenance item		Inspection of connector
	Inspection condition		–
	Requirements		• Connector is properly connected. • No trace of water entry is found. • No corrosion is found in terminal. • Connection to terminal is appropriate.
	Inspection result (Is the judging standard satisfied?)	YES	After replacement of glow electronic control unit, go to step 6
		NO	Modify connector.

Step 6	Inspection items		Inspection of engine electronic control unit connector
	Maintenance item		Inspection of connector
	Inspection condition		–
	Requirements		• Connector is properly connected. • No trace of water entry is found. • No corrosion is found in terminal. • Connection to terminal is appropriate.
	Inspection result (Is the judging standard satisfied?)	YES	Replacement of engine electronic control unit
		NO	Modify connector.

[Fault code]
Diagnosis code: P0684/Flash code: 26
[Monitor]
Failure of preheating control
[Fault (outline)]
Overload
[Diagnosis check]
- Engine electronic control unit monitors data transfer from glow electronic control unit for abnormality (by glow electronic control unit feedback signal).

[Code generation condition]
When either of the following conditions continues for 2, 3 seconds (Warning lamp is lit and diagnosis code is displayed on third establishment of code generation condition.).
- Transmitted signal is too low or too high.
- Transmission time is too long (over).

[Diagnosis check timing]
- Fault diagnosis is continuously performed during the driving cycle.

[Diagnostic requirement]
–

[Control effected by electronic control unit during fault]
- Effects no special control.

[Probable cause of trouble]
- Open-circuit or short-circuit of harness between glow electronic control unit and engine electronic control unit
- Malfunction of each connector
- Malfunction of glow electronic control unit
- Malfunction of engine electronic control unit

[Recoverability]
- Recovered if signal becomes normal with starter switch in ON position.
  (Warning lamp is extinguished and diagnosis code is cleared at fourth display of diagnosis code after recovery.)

[Electronic Control Unit Connection Diagram]

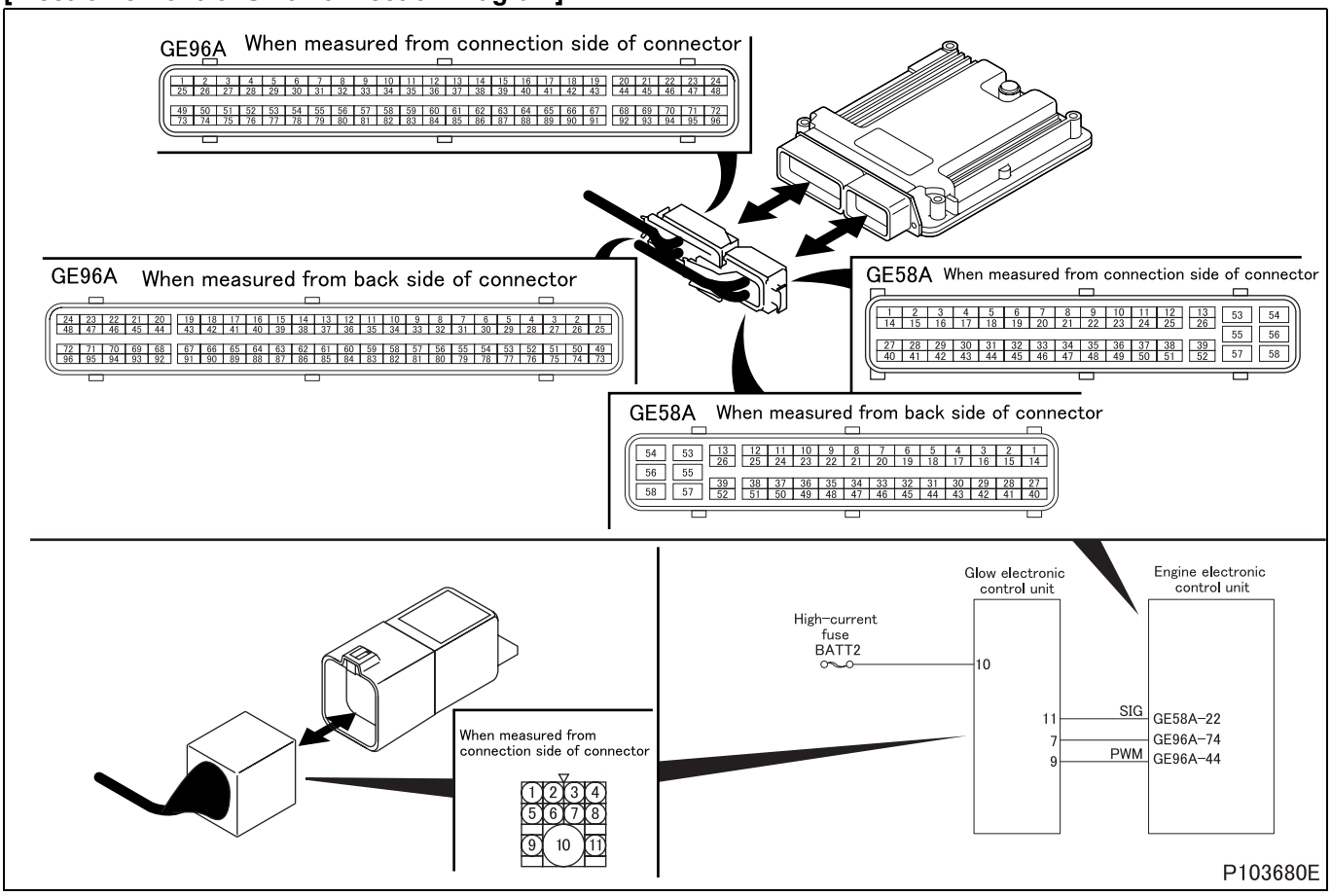

[Parts Identification and Location]

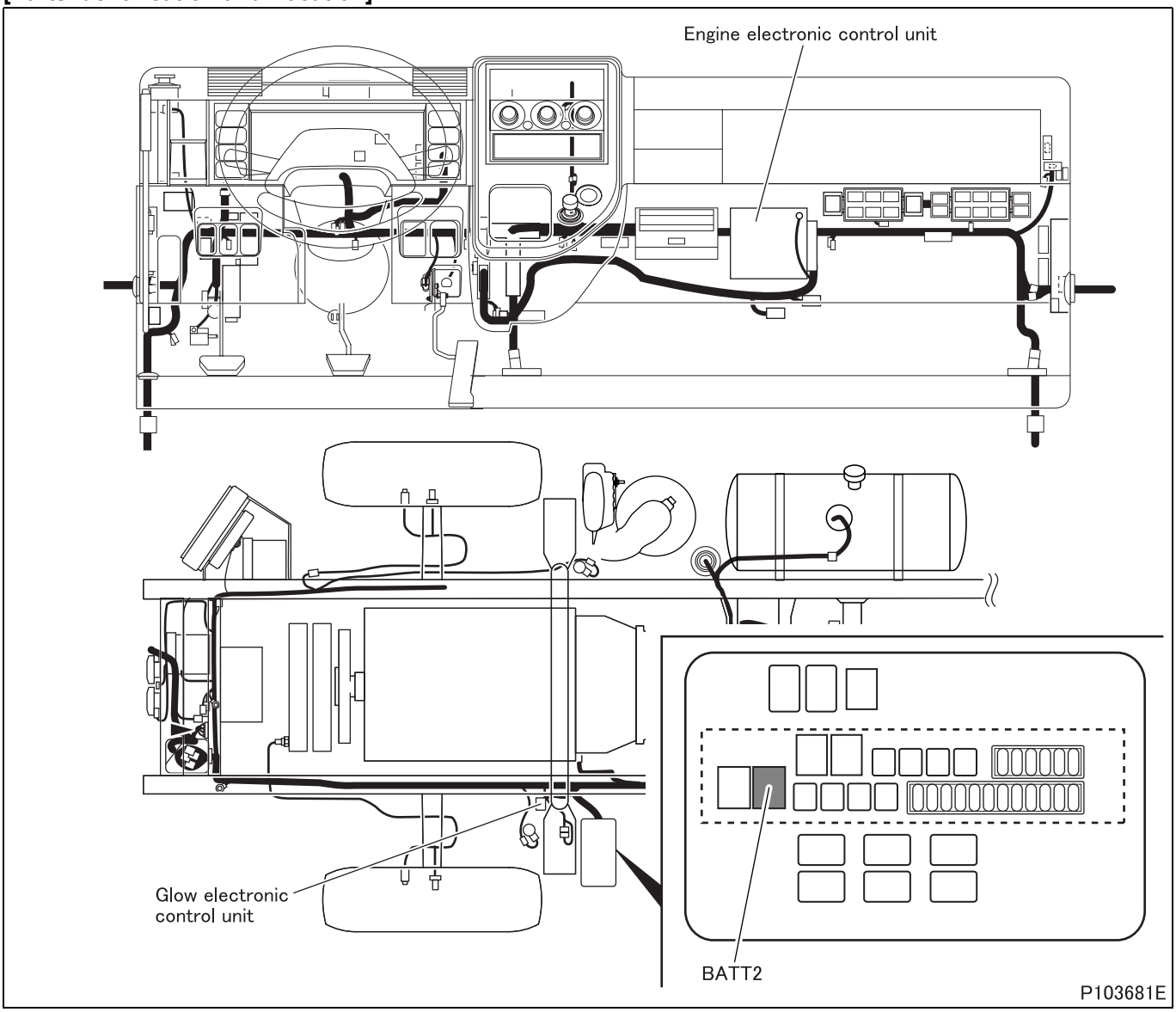

[Fault diagnosis]

- Perform checks in the sequence of the following steps.

Step 1	Inspection items		Inspection of harness between glow electronic control unit and engine electronic control unit
	Maintenance item		Check circuit between following connector terminals. • Fault information circuit: glow electronic control unit terminal No. 11 - engine electronic control unit (GE58A) terminal No. 22 • Power supply circuit: glow electronic control unit terminal No. 7 - engine electronic control unit (GE96A) terminal No. 74 • Operating signal circuit: glow electronic control unit terminal No. 9 - engine electronic control unit (GE96A) terminal No. 44
	Inspection condition		Disconnect each device from harness and measure from connection side of harness connector.
	Requirements		There is continuity.
	Inspection result (Is the judging standard satisfied?)	YES	Go to step 2.
		NO	Modify harness.

Step 2	Inspection items		Inspection of glow electronic control unit connector
	Maintenance item		Inspection of connector
	Inspection condition		–
	Requirements		• Connector is properly connected. • No trace of water entry is found. • No corrosion is found in terminal. • Connection to terminal is appropriate.
	Inspection result (Is the judging standard satisfied?)	YES	After replacement of glow electronic control unit, go to step 3
		NO	Modify connector.

Step 3	Inspection items		Inspection of engine electronic control unit connector
	Maintenance item		Inspection of connector
	Inspection condition		–
	Requirements		• Connector is properly connected. • No trace of water entry is found. • No corrosion is found in terminal. • Connection to terminal is appropriate.
	Inspection result (Is the judging standard satisfied?)	YES	Replacement of engine electronic control unit
		NO	Modify connector.

[Fault code]
Diagnosis code: P0685/Flash code: 84
[Monitor]
Failure of electronic drive unit relay
[Fault (outline)]
Open circuit
[Diagnosis check]
- Electronic drive unit relay circuit is monitored for fault.

[Code generation condition]
- Electronic drive unit relay circuit remains open as detected for 1 second.
  (Warning lamp is lit and diagnosis code is displayed on third establishment of code generation condition.)

[Diagnosis check timing]
- Fault diagnosis is performed each time when the control is halted.

[Diagnostic requirement]
–

[Control effected by electronic control unit during fault]
- Exhaust gas recirculation control is stopped.
- Throttle controls disabled
- Post injection is inhibited.
- Diesel particulate filter regeneration is stopped.
- Particulate matter deposit computation is stopped.
- Related fault check is stopped.

[Probable cause of trouble]
- Open-circuit of harness between electronic control unit and electronic drive unit relay
- Malfunction of each connector
- Malfunction of electronic drive unit relay
- Malfunction of electronic control unit

[Recoverability]
- Recovered if signal becomes normal when starter switch is turned OFF to ON (power supply resumed to electronic control unit).
  (Warning lamp is extinguished and diagnosis code is cleared at fourth display of diagnosis code after recovery.)

[Electronic Control Unit Connection Diagram]

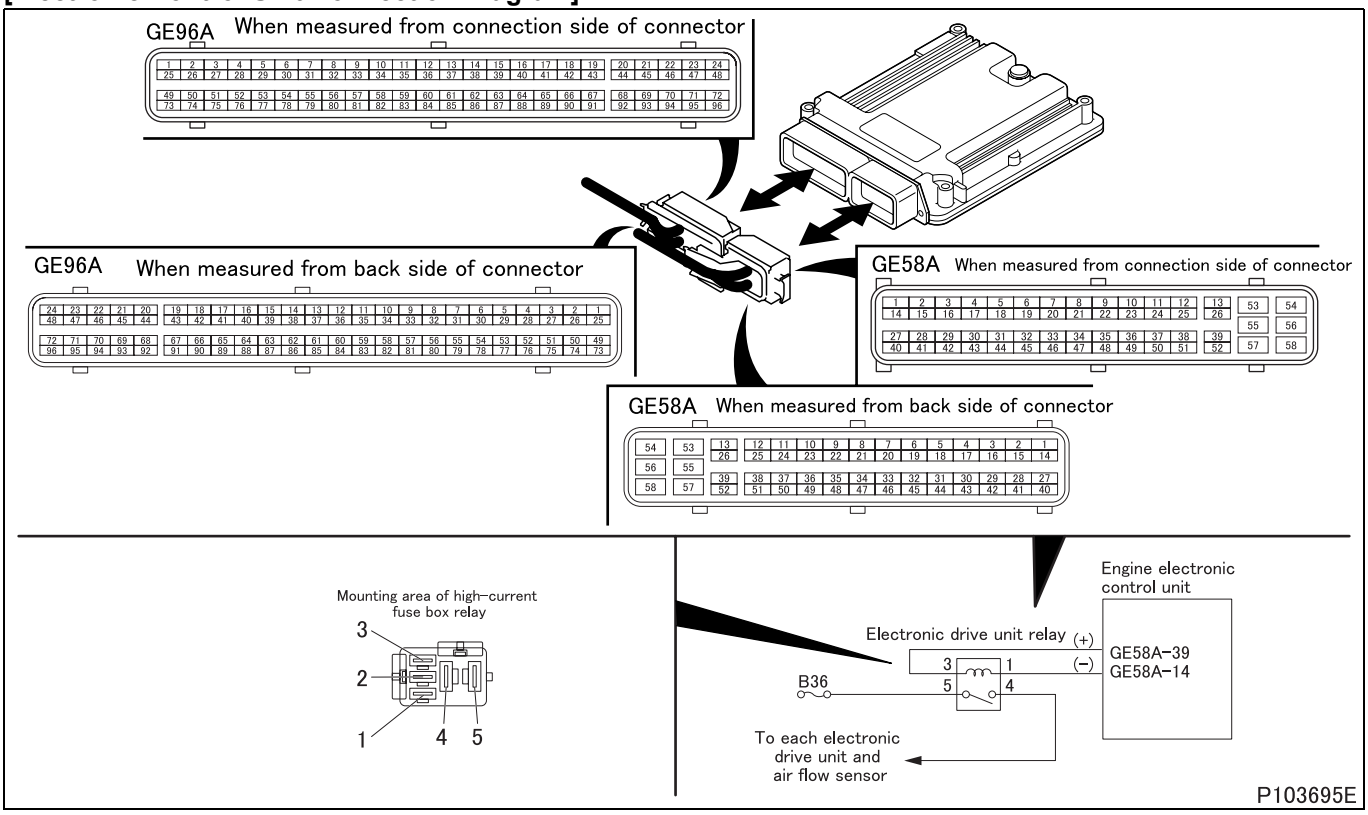

[Parts Identification and Location]

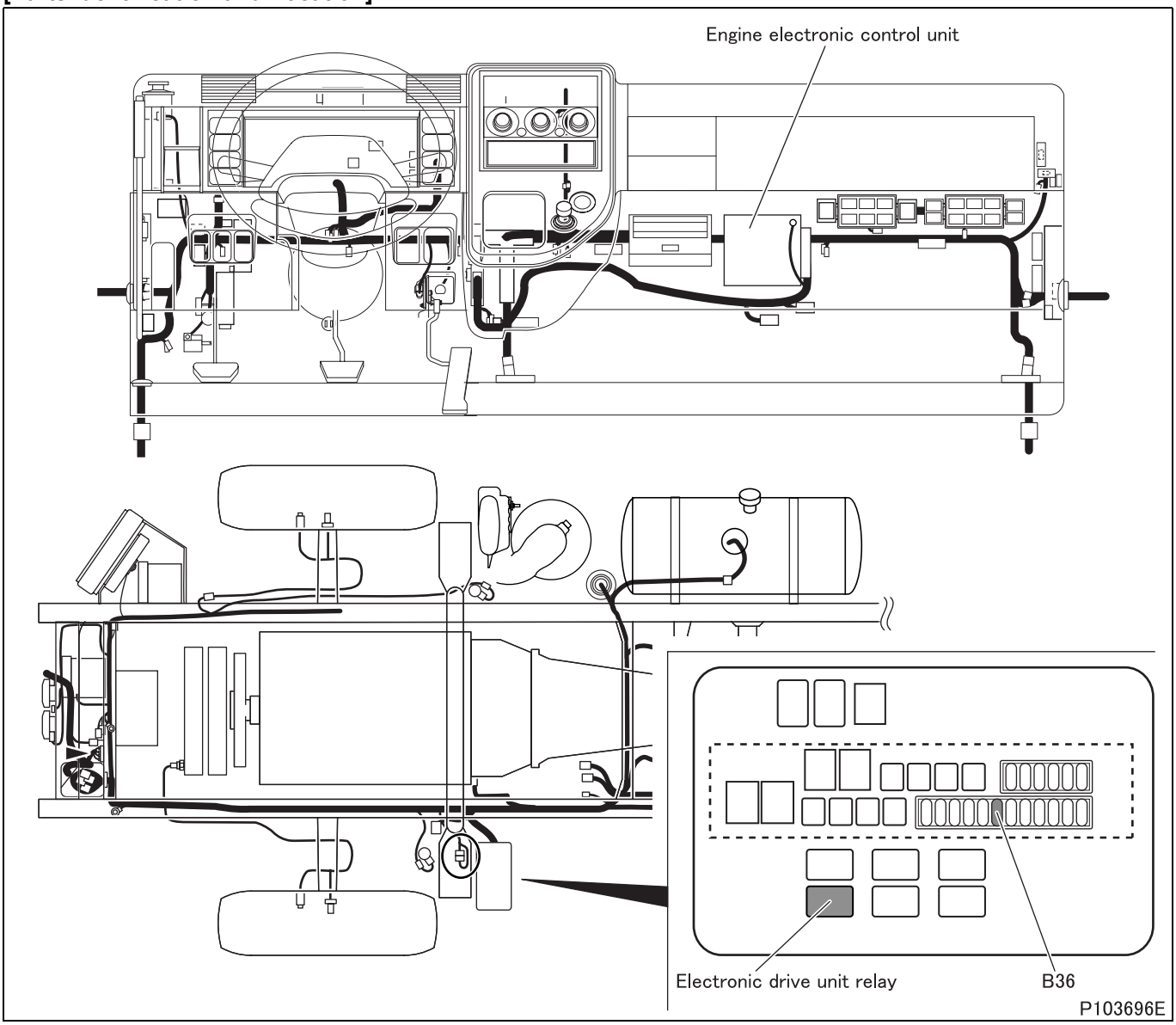

[Fault diagnosis]

- Perform checks in the sequence of the following steps.

Step 1	Inspection items		Inspection by control data
	Maintenance item		Perform actuator test item No. AF “EDU Relay”.
	Inspection condition		–
	Requirements		Relay operation sound is noted (automatic reset after six seconds).
	Inspection result (Is the judging standard satisfied?)	YES	Go to transient fault (See Gr00.).
		NO	Go to step 2.

Step 2	Inspection items		Inspection by electronic control unit connector (power supply)
	Maintenance item		Measure value of voltage between connector (GE58A) terminal No. 39 (+) and No. 14 (–).
	Inspection condition		• Measure from back side of connector of harness with each device connected to harness. • Perform actuator test item No. AF “EDU Relay”.
	Requirements		Same as battery voltage (automatic reset after six seconds)
	Inspection result (Is the judging standard satisfied?)	YES	Go to step 4.
		NO	Go to step 3.

Step 3	Inspection items		Inspection of electronic control unit connector
	Maintenance item		Inspection of connector
	Inspection condition		–
	Requirements		• Connector is properly connected. • No trace of water entry is found. • No corrosion is found in terminal. • Connection to terminal is appropriate.
	Inspection result (Is the judging standard satisfied?)	YES	Go to step 8.
		NO	Modify connector.

Step 4	Inspection items		Inspection of relay connector
	Maintenance item		Inspection of connector
	Inspection condition		–
	Requirements		• Connector is properly connected. • No trace of water entry is found. • No corrosion is found in terminal. • Connection to terminal is appropriate.
	Inspection result (Is the judging standard satisfied?)	YES	Go to step 5.
		NO	Modify connector.

Step 5	Inspection items		Inspection of relay unit
	Maintenance item		Measure continuity between terminals No. 4 and 5 when relay operates.
	Inspection condition		Apply battery voltage across connector terminals No. 3 (+) and 1 (–).
	Requirements		There is continuity.
	Inspection result (Is the judging standard satisfied?)	YES	Go to step 6.
		NO	Replacement of relay

<Step 5 inspection diagram>

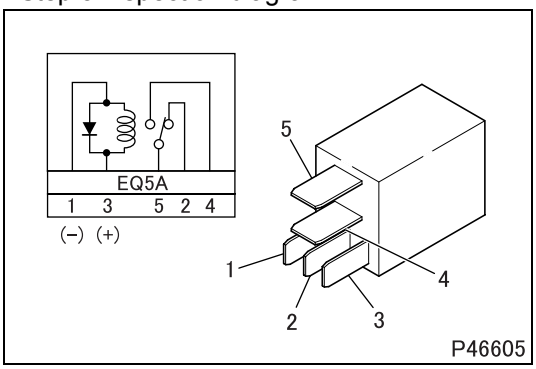

Step 6	Inspection items		Inspection of harness between relay and electronic control unit (power supply)
	Maintenance item		Check circuit between relay connector terminal No. 3 and electronic drive unit connector (GE58A) terminal No. 39
	Inspection condition		Disconnect each device from harness and measure from connection side of harness connector.
	Requirements		There is continuity.
	Inspection result (Is the judging standard satisfied?)	YES	Go to step 7.
		NO	Modify harness.

Step 7	Inspection items		Inspection of harness between relay and electronic control unit (ground)
	Maintenance item		Check circuit between relay connector terminal No. 1 and electronic drive unit connector (GE58A) terminal No. 14
	Inspection condition		Disconnect each device from harness and measure from connection side of harness connector.
	Requirements		There is continuity.
	Inspection result (Is the judging standard satisfied?)	YES	Go to step 8.
		NO	Modify harness.

Step 8	Inspection items		Inspection by control data
	Maintenance item		Perform actuator test item No. AF “EDU Relay”.
	Inspection condition		–
	Requirements		Relay operation sound is noted (automatic reset after six seconds).
	Inspection result (Is the judging standard satisfied?)	YES	Go to transient fault (See Gr00.).
		NO	Replacement of electronic control unit

[Fault code]
Diagnosis code: P0686/Flash code: 84
[Monitor]
Failure of electronic drive unit relay
[Fault (outline)]
Short circuit ground
[Diagnosis check]
- Electronic drive unit relay circuit is monitored for fault.

[Code generation condition]
- Electronic drive unit relay circuit remains shorted to ground as detected for 1 second.
  (Warning lamp is lit and diagnosis code is displayed on third establishment of code generation condition.)

[Diagnosis check timing]
- Fault diagnosis is performed each time when the control is halted.

[Diagnostic requirement]
- After-run executed
- Electronic drive unit relay request signal: OFF

[Control effected by electronic control unit during fault]
- Exhaust gas recirculation control is stopped.
- Throttle controls disabled
- Post injection is inhibited.
- Diesel particulate filter regeneration is stopped.
- Particulate matter deposit computation is stopped.
- Related fault check is stopped.

[Probable cause of trouble]
- Short-circuit of harness between electronic control unit and electronic drive unit relay
- Malfunction of each connector
- Malfunction of electronic drive unit relay
- Malfunction of electronic control unit

[Recoverability]
- Recovered if signal becomes normal when starter switch is turned OFF to ON (power supply resumed to electronic control unit).
  (Warning lamp is extinguished and diagnosis code is cleared at fourth display of diagnosis code after recovery.)

[Electronic Control Unit Connection Diagram]

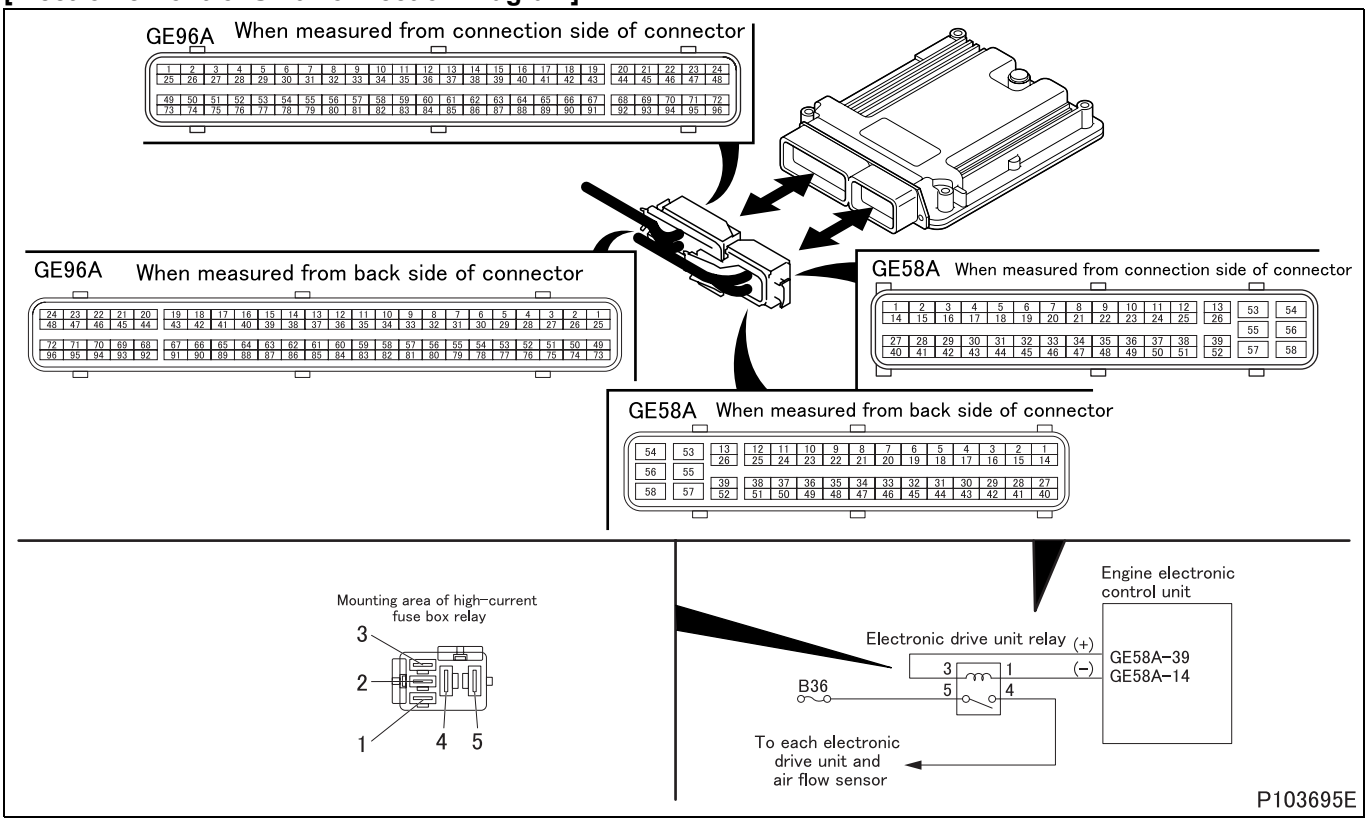

[Parts Identification and Location]

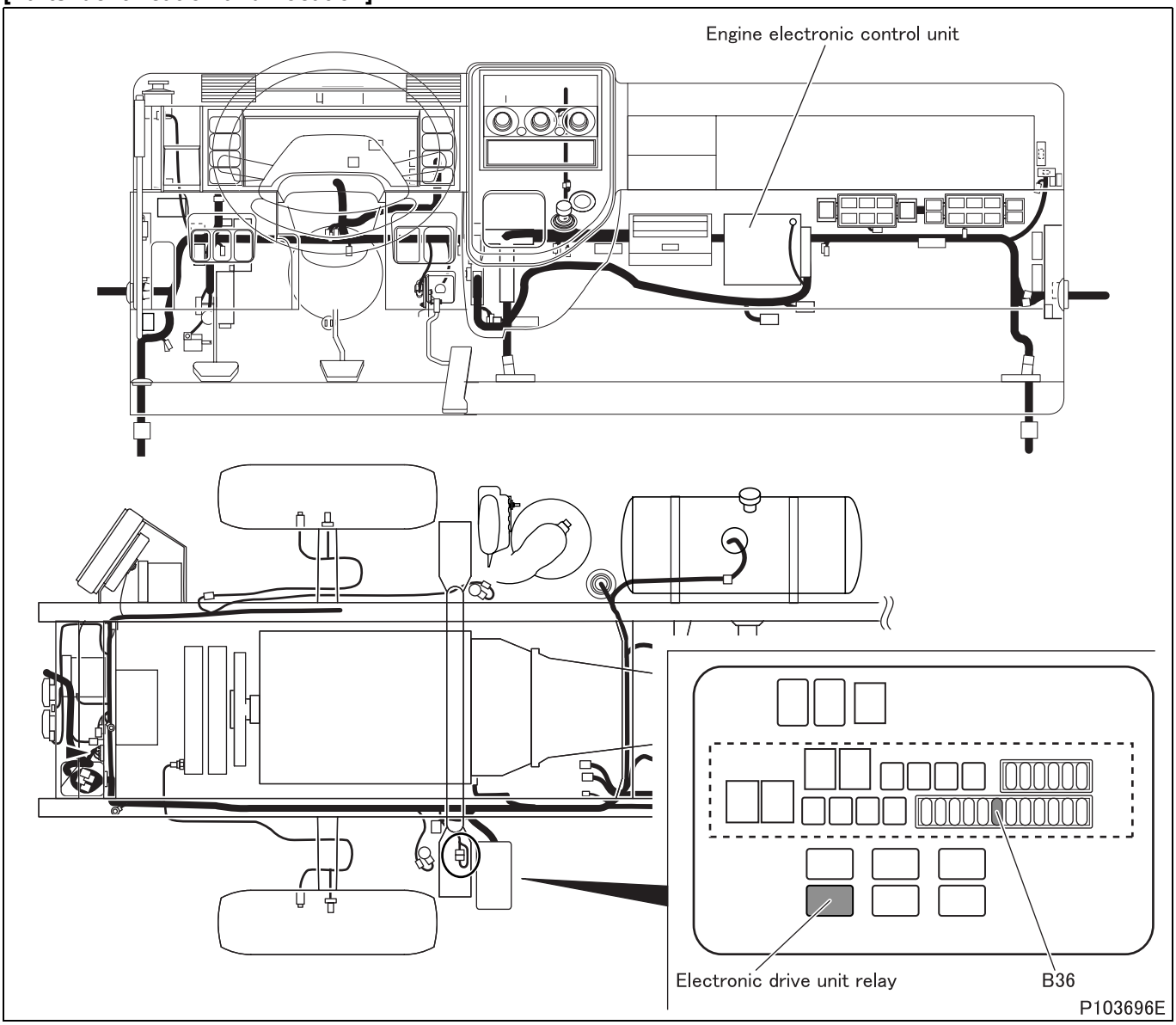

[Fault diagnosis]

- Perform checks in the sequence of the following steps.

Step 1	Inspection items		Inspection by control data
	Maintenance item		Perform actuator test item No. AF “EDU Relay”.
	Inspection condition		–
	Requirements		Relay operation sound is noted (automatic reset after six seconds).
	Inspection result (Is the judging standard satisfied?)	YES	Go to transient fault (See Gr00.).
		NO	Go to step 2.

Step 2	Inspection items		Inspection by electronic control unit connector (power supply)
	Maintenance item		Measure value of voltage between connector (GE58A) terminal No. 39 (+) and No. 14 (–).
	Inspection condition		• Measure from back side of connector of harness with each device connected to harness. • Perform actuator test item No. AF “EDU Relay”.
	Requirements		Same as battery voltage (automatic reset after six seconds)
	Inspection result (Is the judging standard satisfied?)	YES	Go to step 4.
		NO	Go to step 3.

Step 3	Inspection items		Inspection of electronic control unit connector
	Maintenance item		Inspection of connector
	Inspection condition		–
	Requirements		• Connector is properly connected. • No trace of water entry is found. • No corrosion is found in terminal. • Connection to terminal is appropriate.
	Inspection result (Is the judging standard satisfied?)	YES	Go to step 8.
		NO	Modify connector.

Step 4	Inspection items		Inspection of relay connector
	Maintenance item		Inspection of connector
	Inspection condition		–
	Requirements		• Connector is properly connected. • No trace of water entry is found. • No corrosion is found in terminal. • Connection to terminal is appropriate.
	Inspection result (Is the judging standard satisfied?)	YES	Go to step 5.
		NO	Modify connector.

Step 5	Inspection items		Inspection of relay unit
	Maintenance item		Measure continuity between terminals No. 4 and 5 when relay operates.
	Inspection condition		Apply battery voltage across connector terminals No. 3 (+) and 1 (–).
	Requirements		There is continuity.
	Inspection result (Is the judging standard satisfied?)	YES	Go to step 6.
		NO	Replacement of relay

<Step 5 inspection diagram>

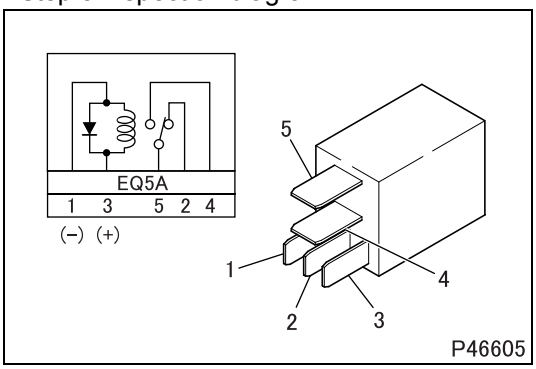

Step 6	Inspection items		Inspection of harness between relay and electronic control unit (power supply)
	Maintenance item		Check circuit between relay connector terminal No. 3 and electronic drive unit connector (GE58A) terminal No. 39
	Inspection condition		Disconnect each device from harness and measure from connection side of harness connector.
	Requirements		There is continuity.
	Inspection result (Is the judging standard satisfied?)	YES	Go to step 7.
		NO	Modify harness.

Step 7	Inspection items		Inspection of harness between relay and electronic control unit (ground)
	Maintenance item		Check circuit between relay connector terminal No. 1 and electronic drive unit connector (GE58A) terminal No. 14
	Inspection condition		Disconnect each device from harness and measure from connection side of harness connector.
	Requirements		There is continuity.
	Inspection result (Is the judging standard satisfied?)	YES	Go to step 8.
		NO	Modify harness.

Step 8	Inspection items		Inspection by control data
	Maintenance item		Perform actuator test item No. AF “EDU Relay”.
	Inspection condition		–
	Requirements		Relay operation sound is noted (automatic reset after six seconds).
	Inspection result (Is the judging standard satisfied?)	YES	Go to transient fault (See Gr00.).
		NO	Replacement of electronic control unit

[Fault code]
Diagnosis code: P0687/Flash code: 84
[Monitor]
Failure of electronic drive unit relay
[Fault (outline)]
Short circuit battery
[Diagnosis check]
- Electronic drive unit relay circuit is monitored for fault.

[Code generation condition]
- Electronic drive unit relay circuit remains shorted to power supply as detected for 1 second.
  (Warning lamp is lit and diagnosis code is displayed on third establishment of code generation condition.)

[Diagnosis check timing]
- Fault diagnosis is performed each time when the control is initiated.

[Diagnostic requirement]
- Electronic drive unit relay is on.
- Electronic drive unit relay request signal: ON

[Control effected by electronic control unit during fault]
- Exhaust gas recirculation control is stopped.
- Throttle controls disabled
- Post injection is inhibited.
- Diesel particulate filter regeneration is stopped.
- Particulate matter deposit computation is stopped.
- Related fault check is stopped.

[Probable cause of trouble]
- Short-circuit of harness between electronic control unit and electronic drive unit relay
- Malfunction of each connector
- Malfunction of electronic drive unit relay
- Malfunction of electronic control unit

[Recoverability]
- Recovered if signal becomes normal when starter switch is turned OFF to ON (power supply resumed to electronic control unit).
  (Warning lamp is extinguished and diagnosis code is cleared at fourth display of diagnosis code after recovery.)

[Electronic Control Unit Connection Diagram]

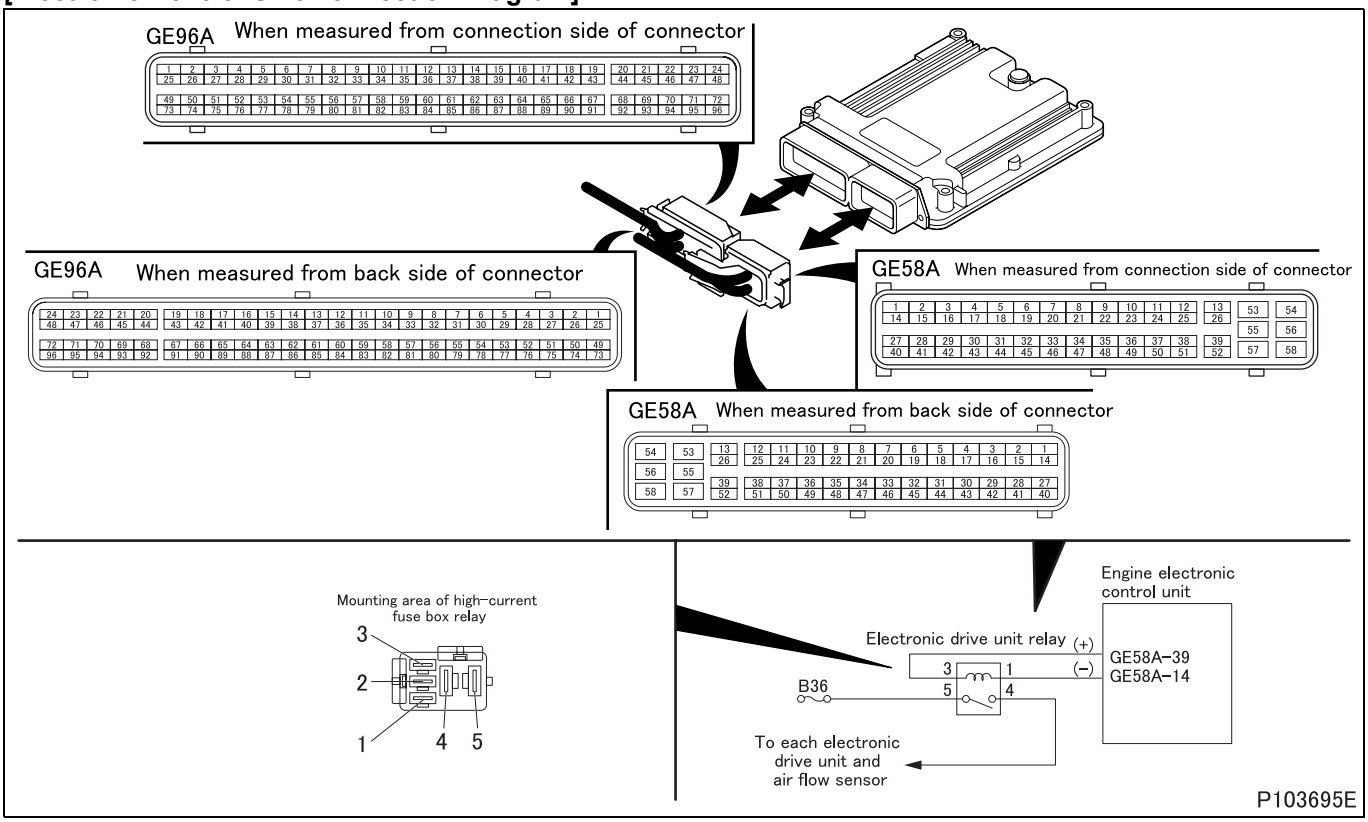

[Parts Identification and Location]

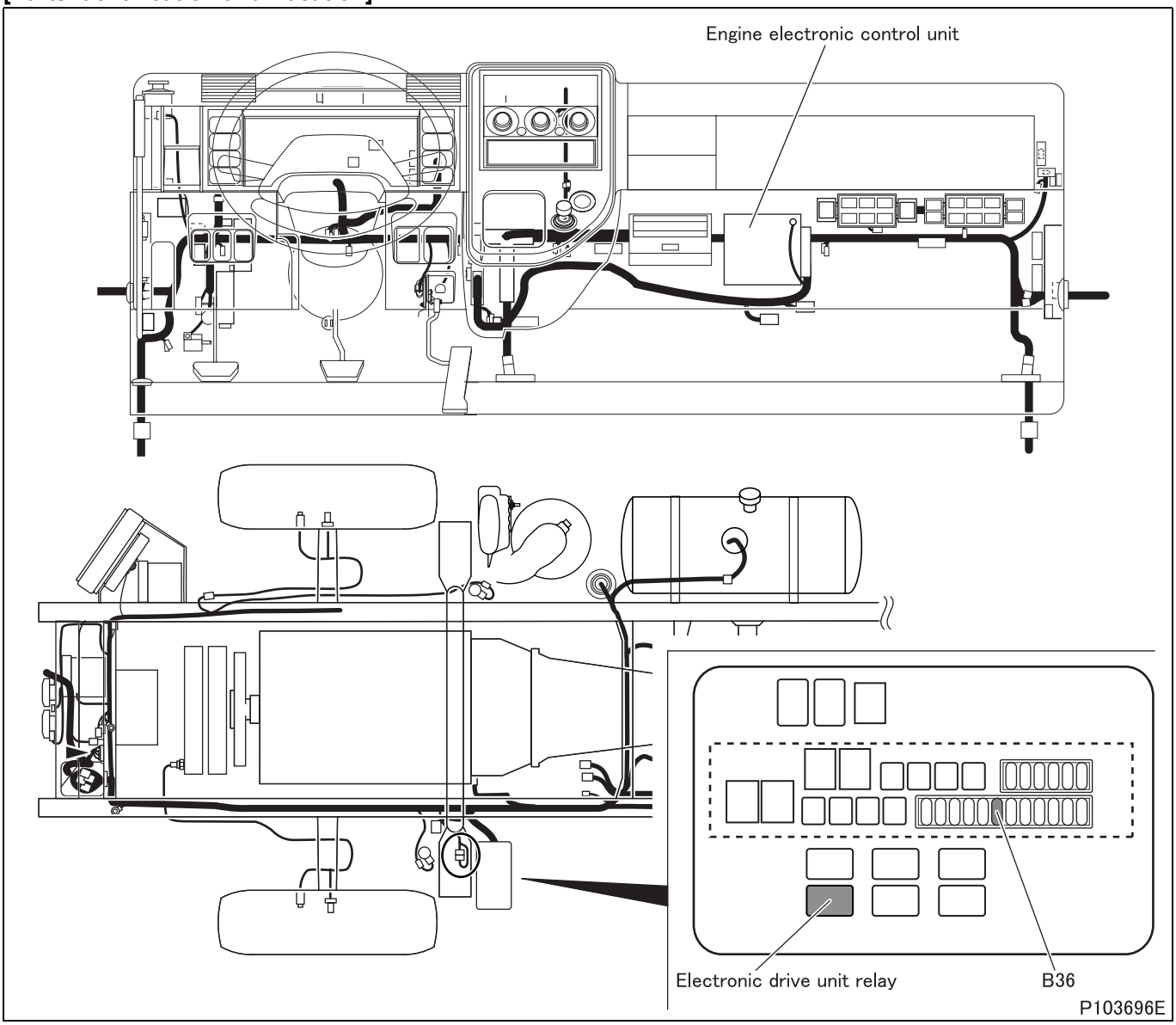

[Fault diagnosis]

- Perform checks in the sequence of the following steps.

Step 1	Inspection items		Inspection by control data
	Maintenance item		Perform actuator test item No. AF “EDU Relay”.
	Inspection condition		–
	Requirements		Relay operation sound is noted (automatic reset after six seconds).
	Inspection result (Is the judging standard satisfied?)	YES	Go to transient fault (See Gr00.).
		NO	Go to step 2.

Step 2	Inspection items		Inspection by electronic control unit connector (power supply)
	Maintenance item		Measure value of voltage between connector (GE58A) terminal No. 39 (+) and No. 14 (–).
	Inspection condition		• Measure from back side of connector of harness with each device connected to harness. • Perform actuator test item No. AF “EDU Relay”.
	Requirements		Same as battery voltage (automatic reset after six seconds)
	Inspection result (Is the judging standard satisfied?)	YES	Go to step 4.
		NO	Go to step 3.

Step 3	Inspection items		Inspection of electronic control unit connector
	Maintenance item		Inspection of connector
	Inspection condition		–
	Requirements		• Connector is properly connected. • No trace of water entry is found. • No corrosion is found in terminal. • Connection to terminal is appropriate.
	Inspection result (Is the judging standard satisfied?)	YES	Go to step 8.
		NO	Modify connector.

Step 4	Inspection items		Inspection of relay connector
	Maintenance item		Inspection of connector
	Inspection condition		–
	Requirements		• Connector is properly connected. • No trace of water entry is found. • No corrosion is found in terminal. • Connection to terminal is appropriate.
	Inspection result (Is the judging standard satisfied?)	YES	Go to step 5.
		NO	Modify connector.

Step 5	Inspection items		Inspection of relay unit
	Maintenance item		Measure continuity between terminals No. 4 and 5 when relay operates.
	Inspection condition		Apply battery voltage across connector terminals No. 3 (+) and 1 (–).
	Requirements		There is continuity.
	Inspection result (Is the judging standard satisfied?)	YES	Go to step 6.
		NO	Replacement of relay

<Step 5 inspection diagram>

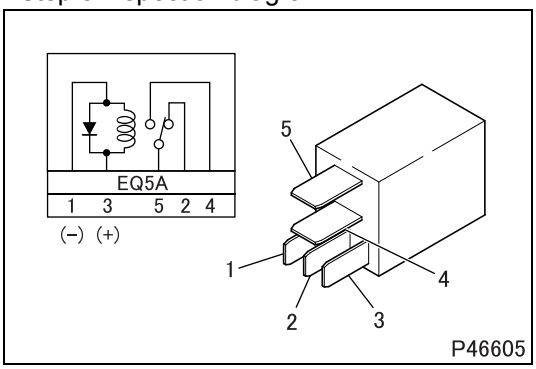

Step 6	Inspection items		Inspection of harness between relay and electronic control unit (power supply)
	Maintenance item		Check circuit between relay connector terminal No. 3 and electronic drive unit connector (GE58A) terminal No. 39
	Inspection condition		Disconnect each device from harness and measure from connection side of harness connector.
	Requirements		There is continuity.
	Inspection result (Is the judging standard satisfied?)	YES	Go to step 7.
		NO	Modify harness.

Step 7	Inspection items		Inspection of harness between relay and electronic control unit (ground)
	Maintenance item		Check circuit between relay connector terminal No. 1 and electronic drive unit connector (GE58A) terminal No. 14
	Inspection condition		Disconnect each device from harness and measure from connection side of harness connector.
	Requirements		There is continuity.
	Inspection result (Is the judging standard satisfied?)	YES	Go to step 8.
		NO	Modify harness.

Step 8	Inspection items		Inspection by control data
	Maintenance item		Perform actuator test item No. AF “EDU Relay”.
	Inspection condition		–
	Requirements		Relay operation sound is noted (automatic reset after six seconds).
	Inspection result (Is the judging standard satisfied?)	YES	Go to transient fault (See Gr00.).
		NO	Replacement of electronic control unit

[Fault code]
Diagnosis code: P0688/Flash code: 84
[Monitor]
Failure of electronic drive unit relay
[Fault (outline)]
Overload
[Diagnosis check]
- Electronic drive unit relay circuit is monitored for fault.

[Code generation condition]
- Power supply temperature in electronic drive unit relay circuit remains at 100°C {212°F} for 1 second (overcurrent).
  (Warning lamp is lit and diagnosis code is displayed on third establishment of code generation condition.)

[Diagnosis check timing]
- Fault diagnosis is performed each time when the control is initiated.

[Diagnostic requirement]
- Electronic drive unit relay is on.
- Electronic drive unit relay request signal: ON

[Control effected by electronic control unit during fault]
- Exhaust gas recirculation control is stopped.
- Throttle controls disabled
- Post injection is inhibited.
- Diesel particulate filter regeneration is stopped.
- Particulate matter deposit computation is stopped.
- Related fault check is stopped.

[Probable cause of trouble]
- Short-circuit of harness between electronic control unit and electronic drive unit
- Malfunction of each connector
- Malfunction of electronic drive unit relay
- Malfunction of electronic control unit

[Recoverability]
- Recovered if signal becomes normal when starter switch is turned OFF to ON (power supply resumed to electronic control unit).
  (Warning lamp is extinguished and diagnosis code is cleared at fourth display of diagnosis code after recovery.)

[Electronic Control Unit Connection Diagram]

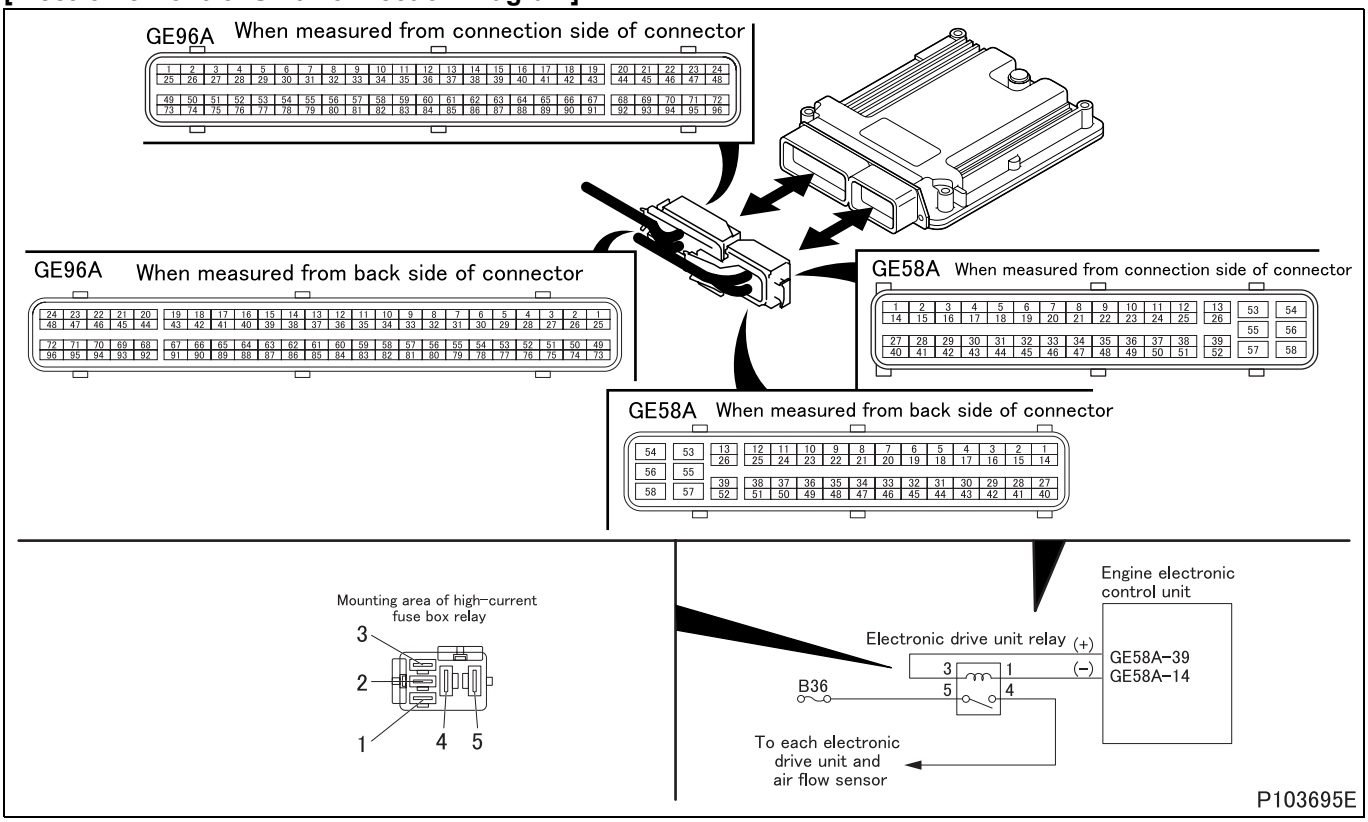

[Parts Identification and Location]

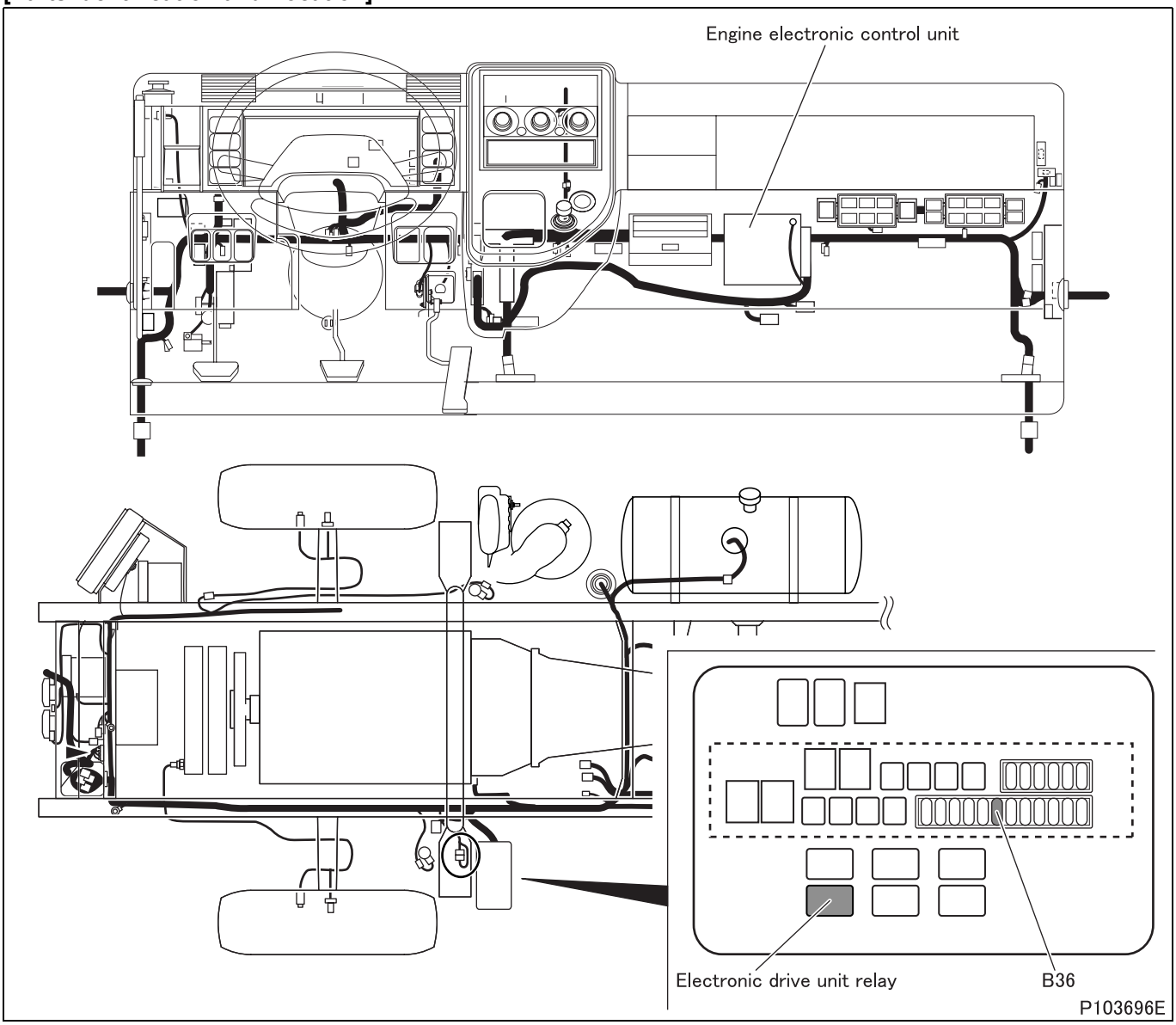

[Fault diagnosis]

- Perform checks in the sequence of the following steps.

Step 1	Inspection items		Inspection by control data
	Maintenance item		Perform actuator test item No. AF “EDU Relay”.
	Inspection condition		–
	Requirements		Relay operation sound is noted (automatic reset after six seconds).
	Inspection result (Is the judging standard satisfied?)	YES	Go to transient fault (See Gr00.).
		NO	Go to step 2.

Step 2	Inspection items		Inspection by electronic control unit connector (power supply)
	Maintenance item		Measure value of voltage between connector (GE58A) terminal No. 39 (+) and No. 14 (–).
	Inspection condition		• Measure from back side of connector of harness with each device connected to harness. • Perform actuator test item No. AF “EDU Relay”.
	Requirements		Same as battery voltage (automatic reset after six seconds)
	Inspection result (Is the judging standard satisfied?)	YES	Go to step 4.
		NO	Go to step 3.

Step 3	Inspection items		Inspection of electronic control unit connector
	Maintenance item		Inspection of connector
	Inspection condition		–
	Requirements		• Connector is properly connected. • No trace of water entry is found. • No corrosion is found in terminal. • Connection to terminal is appropriate.
	Inspection result (Is the judging standard satisfied?)	YES	Go to step 8.
		NO	Modify connector.

Step 4	Inspection items		Inspection of relay connector
	Maintenance item		Inspection of connector
	Inspection condition		–
	Requirements		• Connector is properly connected. • No trace of water entry is found. • No corrosion is found in terminal. • Connection to terminal is appropriate.
	Inspection result (Is the judging standard satisfied?)	YES	Go to step 5.
		NO	Modify connector.

Step 5	Inspection items		Inspection of relay unit
	Maintenance item		Measure continuity between terminals No. 4 and 5 when relay operates.
	Inspection condition		Apply battery voltage across connector terminals No. 3 (+) and 1 (–).
	Requirements		There is continuity.
	Inspection result (Is the judging standard satisfied?)	YES	Go to step 6.
		NO	Replacement of relay

<Step 5 inspection diagram>

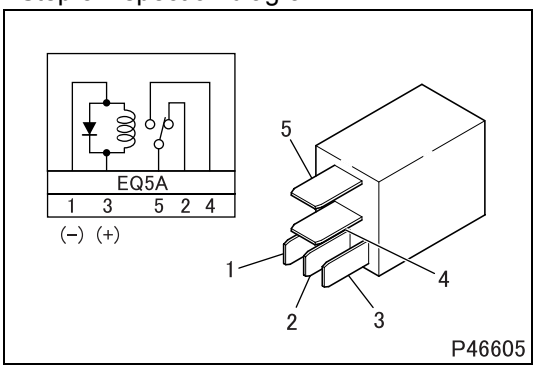

Step 6	Inspection items		Inspection of harness between relay and electronic control unit (power supply)
	Maintenance item		Check circuit between relay connector terminal No. 3 and electronic drive unit connector (GE58A) terminal No. 39
	Inspection condition		Disconnect each device from harness and measure from connection side of harness connector.
	Requirements		There is continuity.
	Inspection result (Is the judging standard satisfied?)	YES	Go to step 7.
		NO	Modify harness.

Step 7	Inspection items		Inspection of harness between relay and electronic control unit (ground)
	Maintenance item		Check circuit between relay connector terminal No. 1 and electronic drive unit connector (GE58A) terminal No. 14
	Inspection condition		Disconnect each device from harness and measure from connection side of harness connector.
	Requirements		There is continuity.
	Inspection result (Is the judging standard satisfied?)	YES	Go to step 8.
		NO	Modify harness.

Step 8	Inspection items		Inspection by control data
	Maintenance item		Perform actuator test item No. AF “EDU Relay”.
	Inspection condition		–
	Requirements		Relay operation sound is noted (automatic reset after six seconds).
	Inspection result (Is the judging standard satisfied?)	YES	Go to transient fault (See Gr00.).
		NO	Replacement of electronic control unit

[Fault code]
Diagnosis code: P0698/Flash code: 81
[Monitor]
Sensor power supply abnormal
[Fault (outline)]
Low signal range check
[Diagnosis check]
- Sensor supply voltage 3 in engine electronic control unit is monitored.
- Units served by sensor supply voltage 3
- Common rail pressure sensor
- DPF pressure sensor (DIFF)
- Boost air temperature sensor

[Code generation condition]
- Supply voltage to units remain below 4.7 V for 0.5 second.
  (Warning lamp is lit and diagnosis code is displayed on first establishment of code generation condition.)

[Diagnosis check timing]
- Fault diagnosis is continuously performed during the driving cycle.

[Diagnostic requirement]
–

[Control effected by electronic control unit during fault]
- Related fault check is stopped.

[Probable cause of trouble]
- Open-circuit or short-circuit of harness between electronic control unit and each sensor
- Malfunction of each connector
- Malfunction of each sensor
- Malfunction of electronic control unit

[Recoverability]
- Recovered if signal becomes normal when starter switch is turned OFF to ON (power supply resumed to electronic control unit).
  (Warning lamp is extinguished and diagnosis code is cleared at fourth display of diagnosis code after recovery.)

[Electronic Control Unit Connection Diagram]

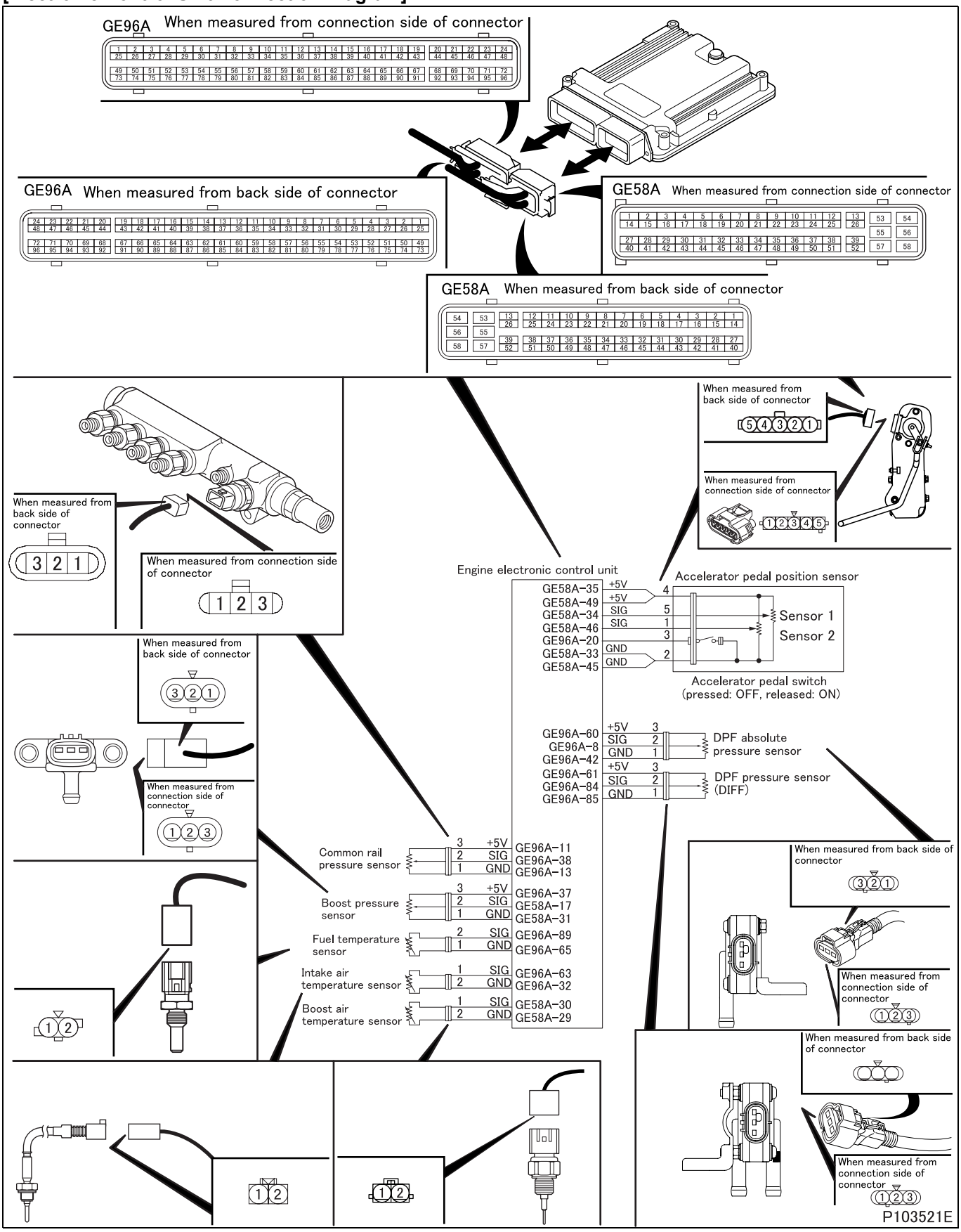

[Parts Identification and Location]

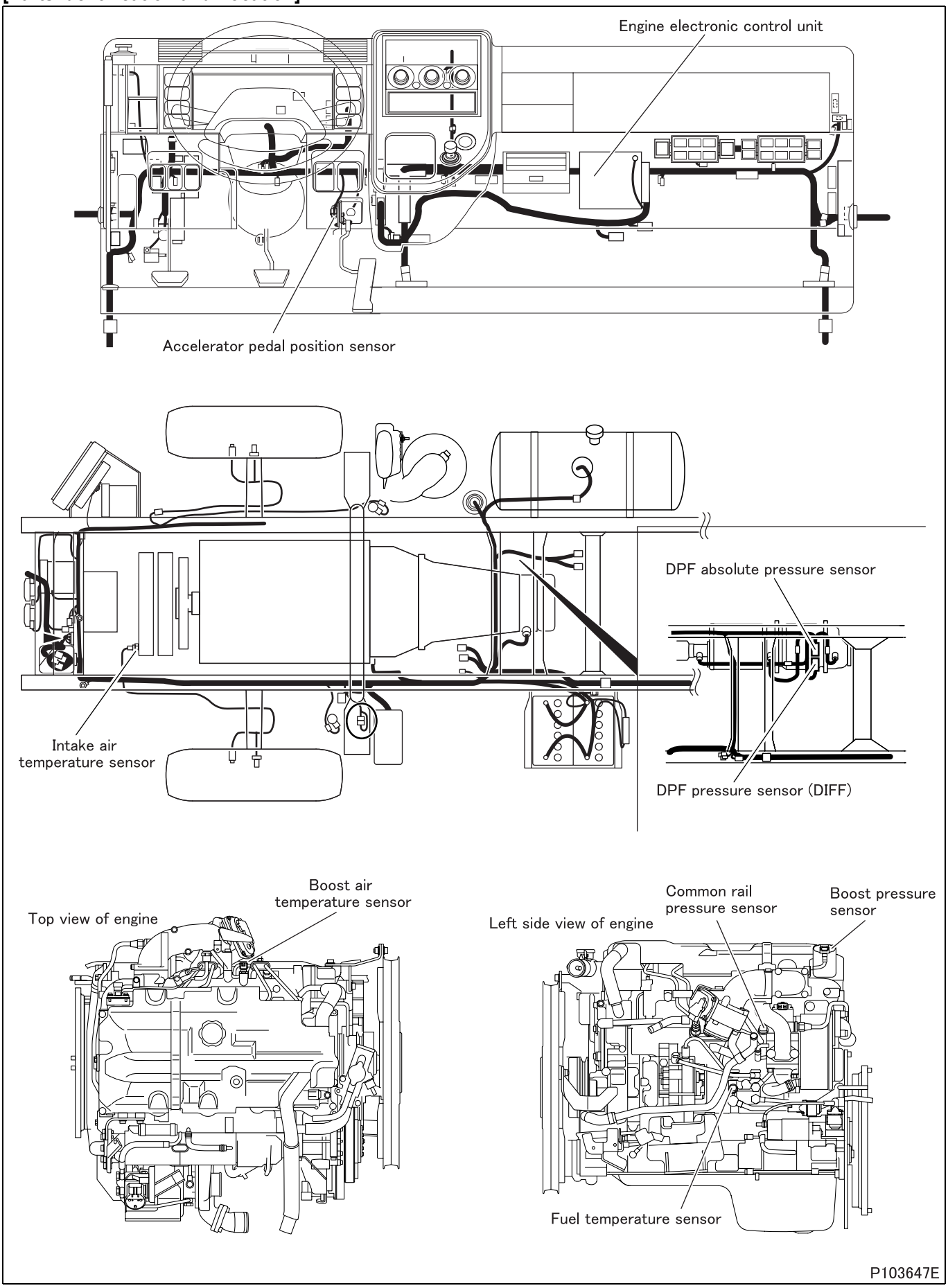

[Fault diagnosis]

- Perform checks in the sequence of the following steps.

Step 1	Inspection items		Inspection of electronic control unit connector
	Maintenance item		Inspection of connector
	Inspection condition		–
	Requirements		• Connector is properly connected. • No trace of water entry is found. • No corrosion is found in terminal. • Connection to terminal is appropriate.
	Inspection result (Is the judging standard satisfied?)	YES	Go to step 2.
		NO	Modify connector.

Step 2	Inspection items		Inspection by electronic control unit connector (power supply): common rail pressure sensor
	Maintenance item		Measure value of voltage between connector (GE96A) terminal No. 11 (+) and No. 13 (–).
	Inspection condition		• Measure from back side of connector of harness with each device connected to harness. • Starter switch: ON
	Requirements		5 V
	Inspection result (Is the judging standard satisfied?)	YES	Go to step 5.
		NO	Go to step 3.

Step 3	Inspection items		Inspection of common rail pressure sensor connector
	Maintenance item		Inspection of connector
	Inspection condition		–
	Requirements		• Connector is properly connected. • No trace of water entry is found. • No corrosion is found in terminal. • Connection to terminal is appropriate.
	Inspection result (Is the judging standard satisfied?)	YES	Go to step 4.
		NO	Modify connector.

Step 4	Inspection items		Inspection of harness between electronic control unit and common rail pressure sensor (power supply)
	Maintenance item		Check circuit between common rail pressure sensor connector terminal No. 3 and electronic control unit connector (GE96A) terminal No. 11.
	Inspection condition		Disconnect each device from harness and measure from connection side of harness connector.
	Requirements		There is continuity.
	Inspection result (Is the judging standard satisfied?)	YES	Go to step 5.
		NO	Modify harness.

Step 5	Inspection items		Inspection by electronic control unit connector (power supply): DPF pressure sensor (DIFF)
	Maintenance item		Measure value of voltage between connector (GE96A) terminal No. 61 (+) and No. 85 (–).
	Inspection condition		• Measure from back side of connector of harness with each device connected to harness. • Starter switch: ON
	Requirements		5 V
	Inspection result (Is the judging standard satisfied?)	YES	Go to step 8.
		NO	Go to step 6.

Step 6	Inspection items		Inspection of DPF pressure sensor (DIFF) connector
	Maintenance item		Inspection of connector
	Inspection condition		–
	Requirements		• Connector is properly connected. • No trace of water entry is found. • No corrosion is found in terminal. • Connection to terminal is appropriate.
	Inspection result (Is the judging standard satisfied?)	YES	Go to step 7.
		NO	Modify connector.

Step 7	Inspection items		Inspection of harness between electronic control unit and DPF pressure sensor (DIFF) (power supply)
	Maintenance item		Check circuit between DPF pressure sensor (DIFF) connector terminal No. 3 and electronic control unit connector (GE96A) terminal No. 61.
	Inspection condition		Disconnect each device from harness and measure from connection side of harness connector.
	Requirements		There is continuity.
	Inspection result (Is the judging standard satisfied?)	YES	Go to step 8.
		NO	Modify harness.

Step 8	Inspection items		Inspection by electronic control unit connector: boost air temperature sensor
	Maintenance item		Measure value of voltage between connector (GE58A) terminal No. 30 (+) and No. 29 (–).
	Inspection condition		• Measure from back side of connector of harness with each device connected to harness. • Starter switch: ON
	Requirements		5 V
	Inspection result (Is the judging standard satisfied?)	YES	Go to transient fault (See Gr00.).
		NO	Go to step 9.

Step 9	Inspection items		Inspection of boost air temperature sensor
	Maintenance item		Inspection of connector
	Inspection condition		–
	Requirements		• Connector is properly connected. • No trace of water entry is found. • No corrosion is found in terminal. • Connection to terminal is appropriate.
	Inspection result (Is the judging standard satisfied?)	YES	Go to step 10.
		NO	Modify connector.

Step 10	Inspection items		Inspection of harness between electronic control unit and boost air temperature sensor (power supply)
	Maintenance item		Check circuit between boost air temperature sensor connector terminal No. 1 and electronic control unit connector (GE58A) terminal No. 30
	Inspection condition		Disconnect each device from harness and measure from connection side of harness connector.
	Requirements		There is continuity.
	Inspection result (Is the judging standard satisfied?)	YES	Replacement of electronic control unit
		NO	Modify harness.

[Fault code]
Diagnosis code: P0699/Flash code: 81
[Monitor]
Sensor power supply abnormal
[Fault (outline)]
High signal range check
[Diagnosis check]
- Sensor supply voltage 3 in engine electronic control unit is monitored.
- Units served by sensor supply voltage 3
- Common rail pressure sensor
- DPF pressure sensor (DIFF)
- Boost air temperature sensor

[Code generation condition]
- Supply voltage to units remain over 5.3 V for 0.5 second.
  (Warning lamp is lit and diagnosis code is displayed on first establishment of code generation condition.)

[Diagnosis check timing]
- Fault diagnosis is continuously performed during the driving cycle.

[Diagnostic requirement]
–

[Control effected by electronic control unit during fault]
- Related fault check is stopped.

[Probable cause of trouble]
- Open-circuit or short-circuit of harness between electronic control unit and each sensor
- Malfunction of each connector
- Malfunction of each sensor
- Malfunction of electronic control unit

[Recoverability]
- Recovered if signal becomes normal when starter switch is turned OFF to ON (power supply resumed to electronic control unit).
  (Warning lamp is extinguished and diagnosis code is cleared at fourth display of diagnosis code after recovery.)

[Electronic Control Unit Connection Diagram]

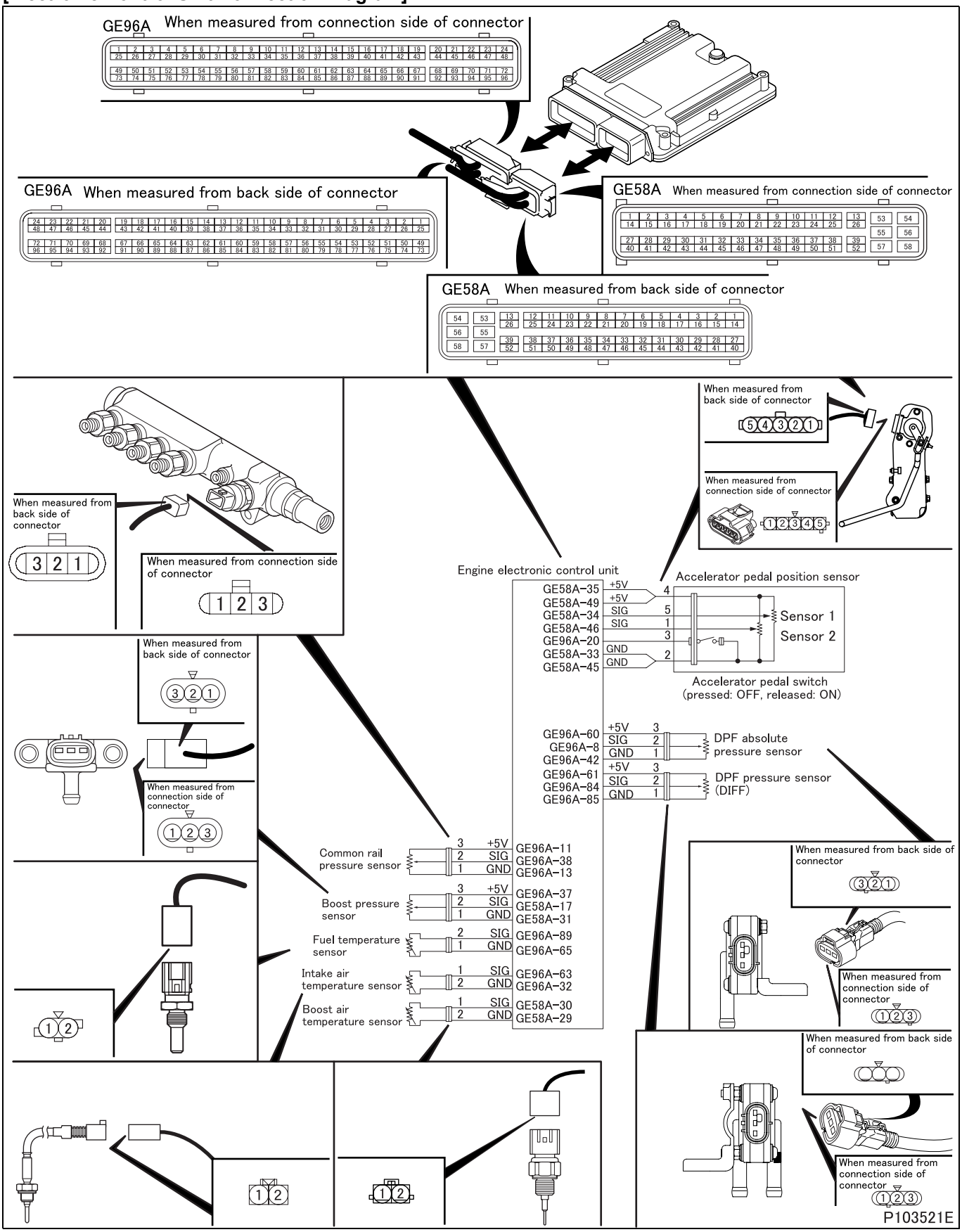

[Parts Identification and Location]

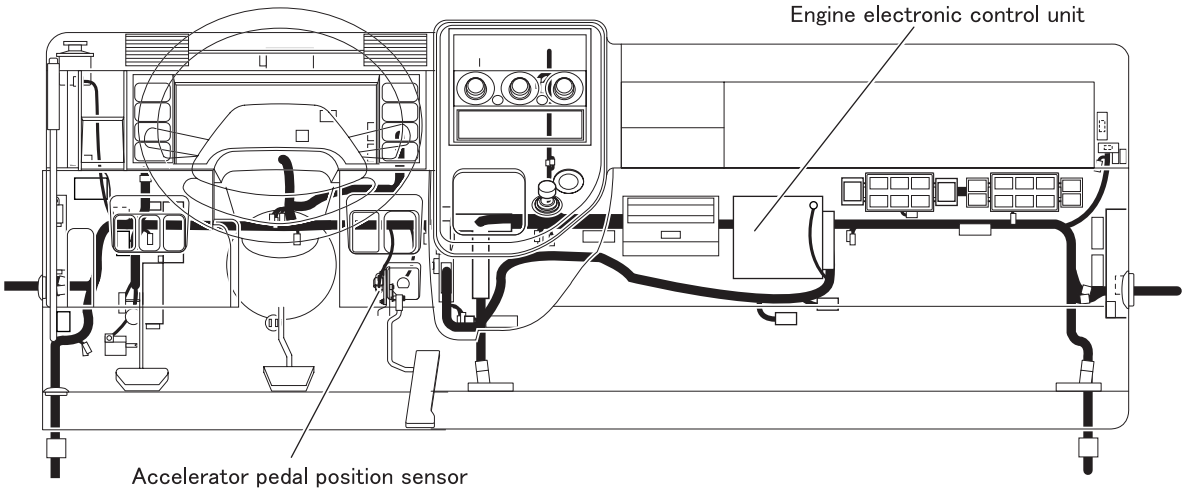

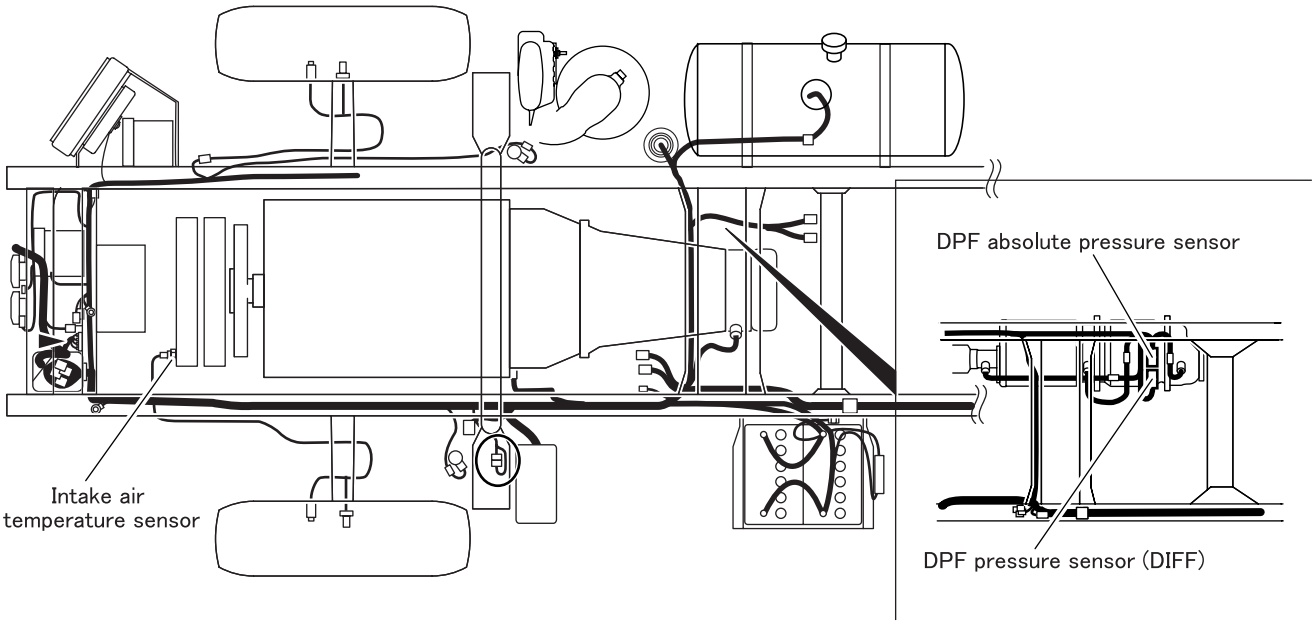

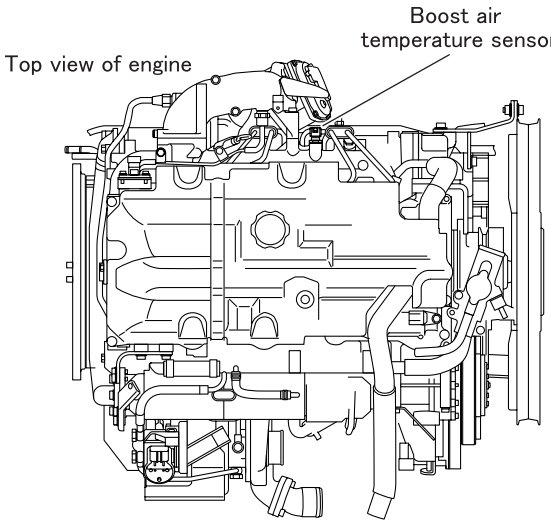

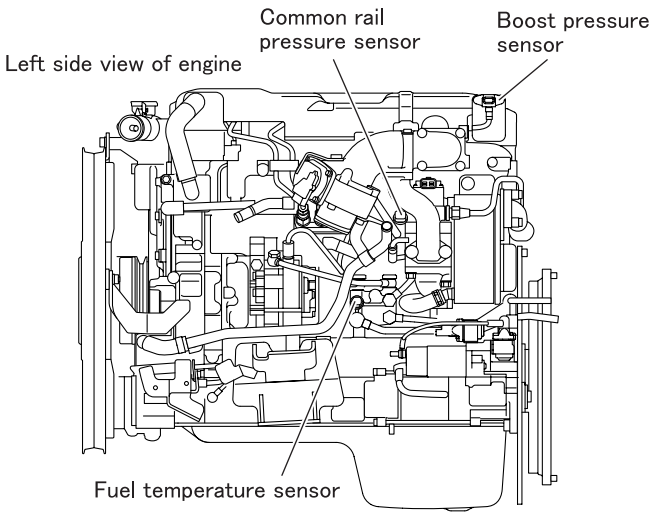

P103647E

[Fault diagnosis]

- Perform checks in the sequence of the following steps.

Step 1	Inspection items		Inspection of electronic control unit connector
	Maintenance item		Inspection of connector
	Inspection condition		–
	Requirements		• Connector is properly connected. • No trace of water entry is found. • No corrosion is found in terminal. • Connection to terminal is appropriate.
	Inspection result (Is the judging standard satisfied?)	YES	Go to step 2.
		NO	Modify connector.

Step 2	Inspection items		Inspection by electronic control unit connector (power supply): common rail pressure sensor
	Maintenance item		Measure value of voltage between connector (GE96A) terminal No. 11 (+) and No. 13 (–).
	Inspection condition		• Measure from back side of connector of harness with each device connected to harness. • Starter switch: ON
	Requirements		5 V
	Inspection result (Is the judging standard satisfied?)	YES	Go to step 5.
		NO	Go to step 3.

Step 3	Inspection items		Inspection of common rail pressure sensor connector
	Maintenance item		Inspection of connector
	Inspection condition		–
	Requirements		• Connector is properly connected. • No trace of water entry is found. • No corrosion is found in terminal. • Connection to terminal is appropriate.
	Inspection result (Is the judging standard satisfied?)	YES	Go to step 4.
		NO	Modify connector.

Step 4	Inspection items		Inspection of harness between electronic control unit and common rail pressure sensor (power supply)
	Maintenance item		Check circuit between common rail pressure sensor connector terminal No. 3 and electronic control unit connector (GE96A) terminal No. 11.
	Inspection condition		Disconnect each device from harness and measure from connection side of harness connector.
	Requirements		There is continuity.
	Inspection result (Is the judging standard satisfied?)	YES	Go to step 5.
		NO	Modify harness.

Step 5	Inspection items		Inspection by electronic control unit connector (power supply): DPF pressure sensor (DIFF)
	Maintenance item		Measure value of voltage between connector (GE96A) terminal No. 61 (+) and No. 85 (–).
	Inspection condition		• Measure from back side of connector of harness with each device connected to harness. • Starter switch: ON
	Requirements		5 V
	Inspection result (Is the judging standard satisfied?)	YES	Go to step 8.
		NO	Go to step 6.

Step 6	Inspection items		Inspection of DPF pressure sensor (DIFF) connector
	Maintenance item		Inspection of connector
	Inspection condition		–
	Requirements		• Connector is properly connected. • No trace of water entry is found. • No corrosion is found in terminal. • Connection to terminal is appropriate.
	Inspection result (Is the judging standard satisfied?)	YES	Go to step 7.
		NO	Modify connector.

Step 7	Inspection items		Inspection of harness between electronic control unit and DPF pressure sensor (DIFF) (power supply)
	Maintenance item		Check circuit between DPF pressure sensor (DIFF) connector terminal No. 3 and electronic control unit connector (GE96A) terminal No. 61.
	Inspection condition		Disconnect each device from harness and measure from connection side of harness connector.
	Requirements		There is continuity.
	Inspection result (Is the judging standard satisfied?)	YES	Go to step 8.
		NO	Modify harness.

Step 8	Inspection items		Inspection by electronic control unit connector: boost air temperature sensor
	Maintenance item		Measure value of voltage between connector (GE58A) terminal No. 30 (+) and No. 29 (–).
	Inspection condition		• Measure from back side of connector of harness with each device connected to harness. • Starter switch: ON
	Requirements		5 V
	Inspection result (Is the judging standard satisfied?)	YES	Go to transient fault (See Gr00.).
		NO	Go to step 9.

Step 9	Inspection items		Inspection of boost air temperature sensor
	Maintenance item		Inspection of connector
	Inspection condition		–
	Requirements		• Connector is properly connected. • No trace of water entry is found. • No corrosion is found in terminal. • Connection to terminal is appropriate.
	Inspection result (Is the judging standard satisfied?)	YES	Go to step 10.
		NO	Modify connector.

Step 10	Inspection items		Inspection of harness between electronic control unit and boost air temperature sensor (power supply)
	Maintenance item		Check circuit between boost air temperature sensor connector terminal No. 1 and electronic control unit connector (GE58A) terminal No. 30
	Inspection condition		Disconnect each device from harness and measure from connection side of harness connector.
	Requirements		There is continuity.
	Inspection result (Is the judging standard satisfied?)	YES	Replacement of electronic control unit
		NO	Modify harness.

[Fault code]
Diagnosis code: P0700/Flash code: 71
[Monitor]
Failure of automatic transmission control
[Fault (outline)]
Fault present in TCM
(TCM: Transmission Control Module)
[Diagnosis check]
- Transfer of fault status information from automatic transmission electronic control unit is monitored.

[Code generation condition]
- Fault information from automatic transmission electronic control unit has been received for more than 2 seconds. (Warning lamp is lit and diagnosis code is displayed on first establishment of code generation condition.)

[Diagnosis check timing]
- Fault diagnosis is continuously performed during the driving cycle.

[Diagnostic requirement]
–

[Control effected by electronic control unit during fault]
- Effects no special control.

[Probable cause of trouble]
- Failure of automatic transmission system (See Gr23.)

[Recoverability]
- Recovered if signal becomes normal with starter switch in ON position.
  (Warning lamp is extinguished and diagnosis code is cleared at fourth display of diagnosis code after recovery.)

[Fault code]
Diagnosis code: P1169/Flash code: 56
[Monitor]
Characteristic value in air flow sensor
[Fault (outline)]
Electronic control unit
[Diagnosis check]
- Availability of stored air flow sensor data in engine electronic control unit is checked.

[Code generation condition]
- Air flow sensor data are found missing.
  (Warning lamp is lit and diagnosis code is displayed on first establishment of code generation condition.)

[Diagnosis check timing]
- Fault diagnosis is continuously performed during the driving cycle.

[Diagnostic requirement]
–

[Control effected by electronic control unit during fault]
- Effects no special control.

[Probable cause of trouble]
- No air flow sensor data stored in engine electronic control unit
  (For data alteration/registration and data write operation, contact your nearest MITSUBISHI FUSO dealer or MITSUBISHI FUSO TRUCK OF AMERICA, Inc.)

[Recoverability]
- Recovered if signal becomes normal when starter switch is turned OFF to ON (power supply resumed to electronic control unit).
  (Warning lamp is extinguished and diagnosis code is cleared simultaneously with recovery.)

[Fault code]
Diagnosis code: P1170/Flash code: 34
[Monitor]
Injection quantity adjustment data
[Fault (outline)]
Electronic control unit
[Diagnosis check]
- Availability of stored injection quantity adjustment data in engine electronic control unit is checked.

[Code generation condition]
- Injection quantity adjustment data are found missing.
  (Warning lamp is lit and diagnosis code is displayed on first establishment of code generation condition.)

[Diagnosis check timing]
- Fault diagnosis is continuously performed during the driving cycle.

[Diagnostic requirement]
–

[Control effected by electronic control unit during fault]
- Injection quantity adjustment data is fixed at backup value.

[Probable cause of trouble]
- No injection quantity adjustment data stored in engine electronic control unit
  (For data alteration/registration and data write operation, contact your nearest MITSUBISHI FUSO dealer or MITSUBISHI FUSO TRUCK OF AMERICA, Inc.)

[Recoverability]
- Recovered if signal becomes normal when starter switch is turned OFF to ON (power supply resumed to electronic control unit).
  (Warning lamp is extinguished and diagnosis code is cleared simultaneously with recovery.)

[Fault code]
Diagnosis code: P1410/Flash code: 92
[Monitor]
Excessive exhaust pressure
[Fault (outline)]
- Low signal range check
- High signal range check

[Diagnosis check]
- Pressure before ceramic filter is monitored by DPF absolute pressure sensor for clogging of ceramic filter.

[Code generation condition]
- Pressure before ceramic filter remains over specified value for 3 seconds.
  (Warning lamp is lit and diagnosis code is displayed on first establishment of code generation condition.)

[Diagnosis check timing]
- Fault diagnosis is continuously performed during the driving cycle.

[Diagnostic requirement]
–

[Control effected by electronic control unit during fault]
- Engine torque is limited.
- Exhaust gas recirculation control is stopeed.
- Throttle control disabled.
- Diesel particulate filter regeneration is stopped.
- Particulate matter deposit computation is stopped.

[Probable cause of trouble]
- Excessive smoke emission (due to malfunction of engine proper, common rail or exhaust gas recirculation system)
- Malfunction of diesel particulate filter regeneration control
- Excessive particuler matter (PM) deposit
- Malfunction of DPF absolute pressure sensor.
- Malfunction of engine electronic control unit

[Recoverability]
- Recovered if signal becomes normal when starter switch is turned OFF to ON (power supply resumed to electronic control unit).
  (Warning lamp is extinguished and diagnosis code is cleared simultaneously with recovery.)

[Electronic Control Unit Connection Diagram]

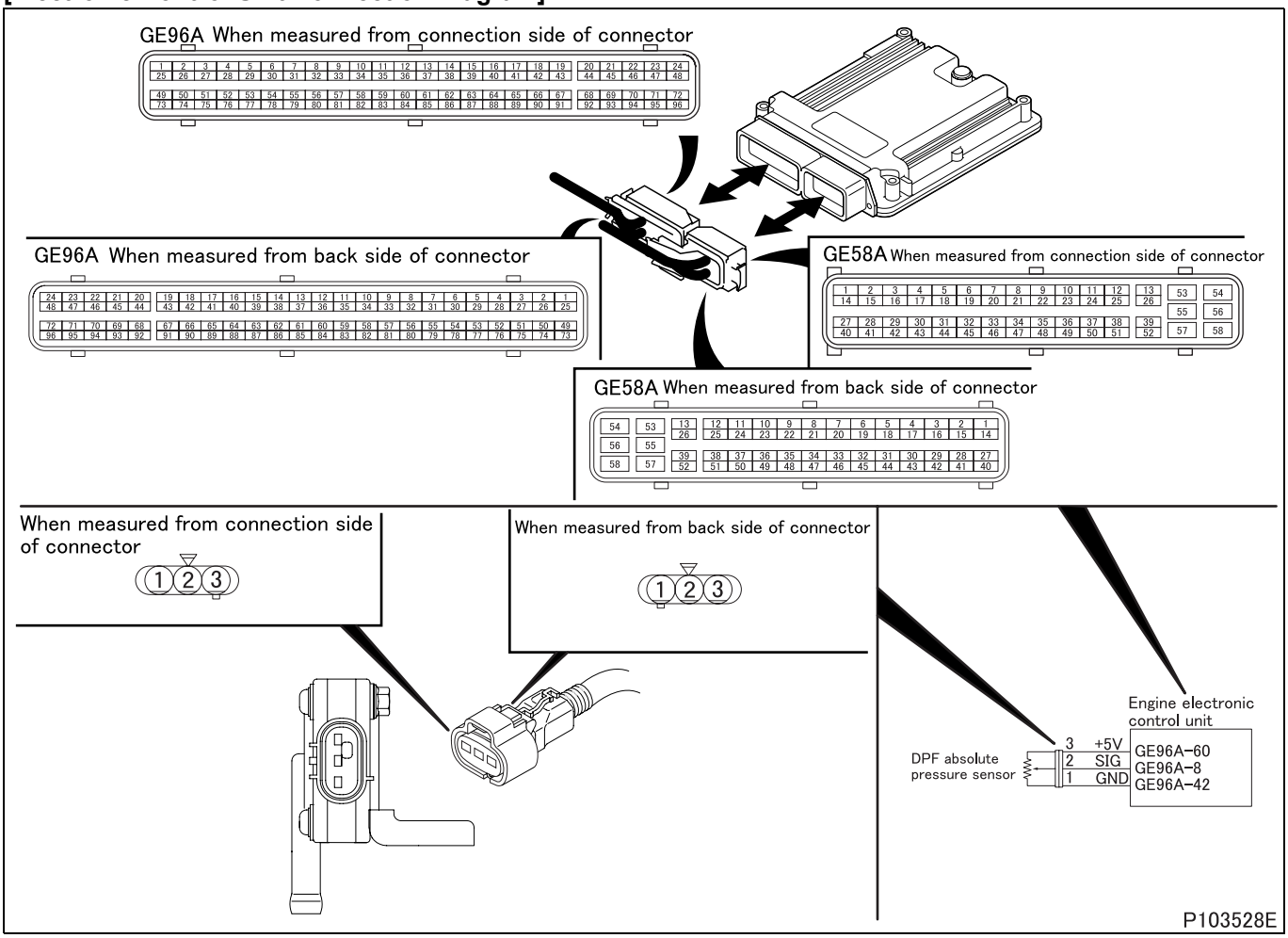

[Parts Identification and Location]

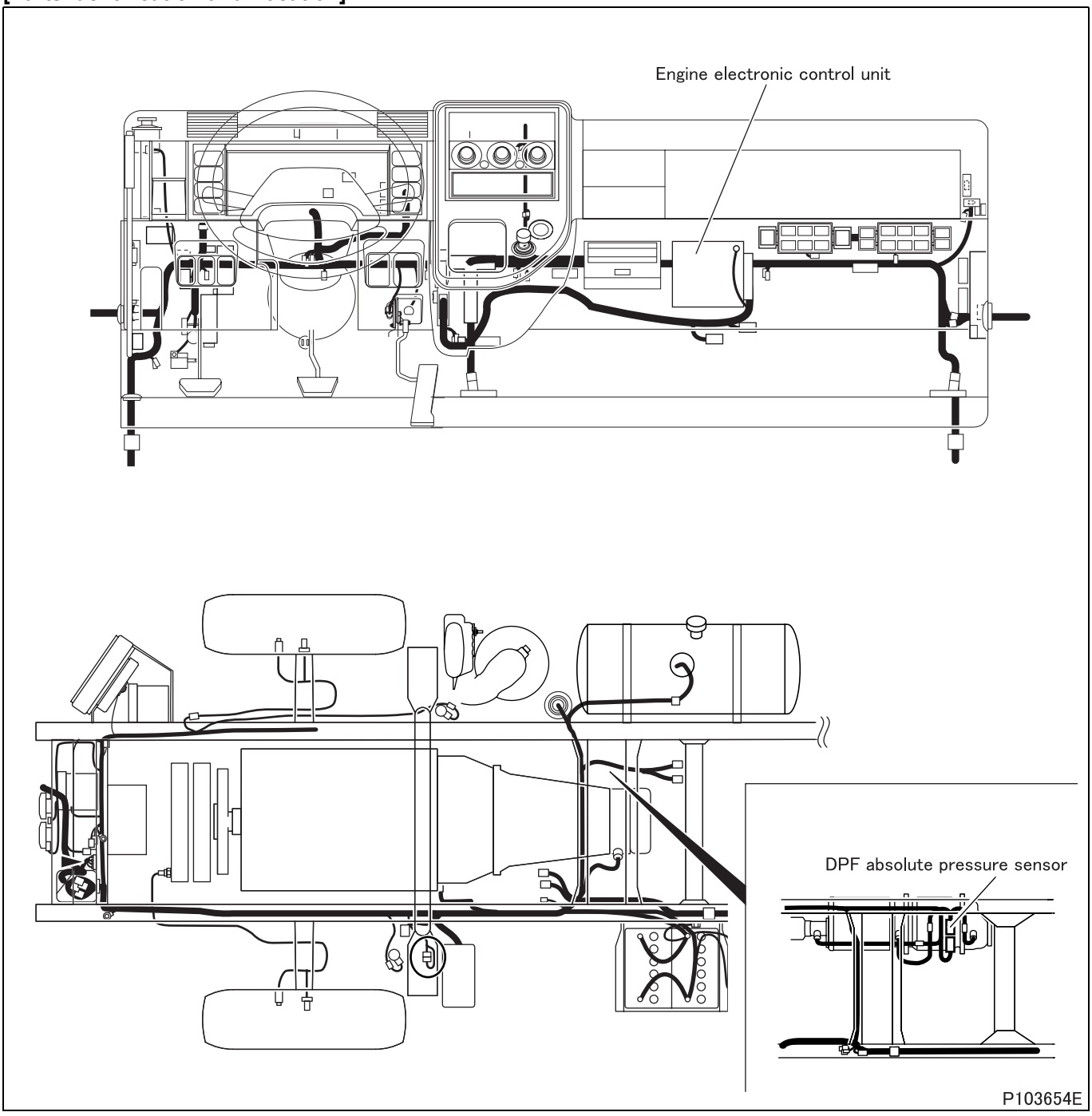

[Fault diagnosis]

- Perform checks in the sequence of the following steps.

Step 1	Inspection items		Inspection by control data
	Maintenance item		Check if following diagnosis codes occur simultaneously. • P0045 “VGT Actuator (Open)” • P0046 “VGT Actuator (Performance)” • P0047 “VGT Actuator (Low)” • P0102 “Airflow sensor (Low)” • P0103 “Airflow sensor (High)” • P0426 ”EXH Gas Temp SNSR1 (Plausibility)” • P0427 ”EXH Gas Temp SNSR1 (Low)” • P0428 ”EXH Gas Temp SNSR1 (High)” • P0545 ”DPF Temp SNSR (upstream) Low” • P0546 ”DPF Temp SNSR (upstream) High” • P1430 “DPF Regeneration Switch” • P1660 “DPF Lamp Control Circuit (Low)” • P2031 “Exhaust Gas Temp” • P2032 “Exhaust Gas Temp (Low)” • P2033 “Exhaust Gas Temp (High)” • P2453 “DPF Diff SNSR (Plausi) & MFF” • P2454 “DPF Diff SNSR (Low) & MFF” • P2455 “DPF Diff SNSR (HIgh) & MFF”
	Inspection condition		Ensure that each sensor mounting condition is free of abnormalities.
	Requirements		Codes occur.
	Inspection result (Is the judging standard satisfied?)	YES	After inspection of diagnosis cord that is occuring, go to step 2.
		NO	Go to step 2.

Step 2	Inspection items		Inspection of DPF absolute pressure sensor unit
	Maintenance item		Measure value of voltage between terminal No. 2 (+) and 1 (–).
	Inspection condition		• Apply voltage DC 5 V across connector terminals No. 3 (+) and 1 (–). • Gradually increase applied air pressure.
	Requirements		• 41 ± 3.2 kPa {5.9 ± 0.5 psi, 0.43 ± 0.03 kgf/cm^2}: 1.875 V • 99 ± 3.2 kPa {14 ± 0.5 psi, 1.0 ± 0.03 kgf/cm^2}: 4.5 V
	Inspection result (Is the judging standard satisfied?)	YES	Go to step 3.
		NO	Replacement of sensor

<Step 2 inspection diagram>

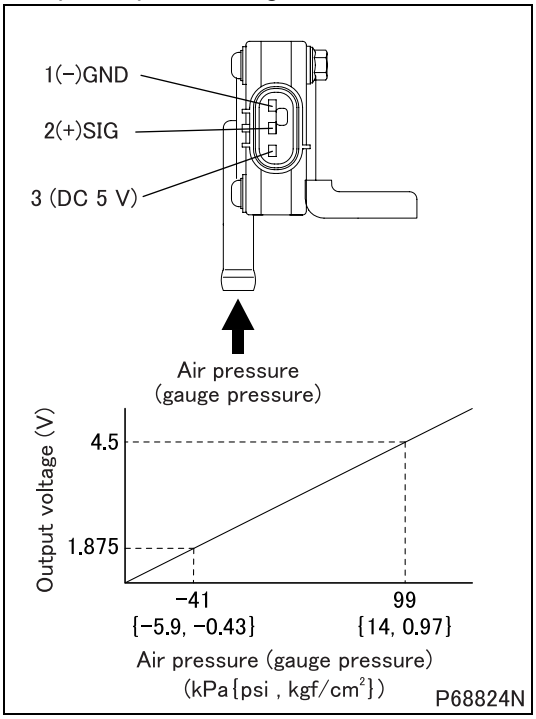

Step 3	Inspection items		Inspection of oil level
	Maintenance item		Inspection of engine oil level
	Inspection condition		Engine is stopped.
	Requirements		Oil level for inspection is not exceeded.
	Inspection result (Is the judging standard satisfied?)	YES	Go to step 4.
		NO	After replacement of oil, go to step 4.

<Step 3 inspection diagram>

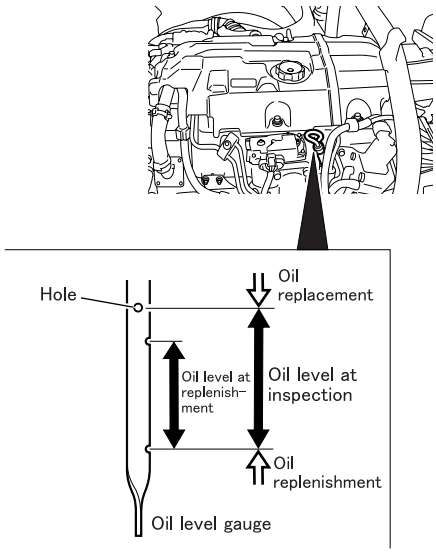

P103677E

Step 4	Inspection items		Inspection of pressure hose
	Maintenance item		Check pressure hose of DPF absolute pressure sensor and DPF pressure sensor (DIFF) for connection and cracks.
	Inspection condition		–
	Requirements		Nothing abnormal detected
	Inspection result (Is the judging standard satisfied?)	YES	Go to step 5.
		NO	After correction and replacement of hose, go to step 5.

Step 5	Inspection items		Unit inspection of diesel particulate filter
	Maintenance item		Check the exhaust passage inside the diesel particulate filter for adhesion of soot in large quantity.
	Inspection condition		Remove diesel particulate filter.
	Requirements		No soot is deposited.
	Inspection result (Is the judging standard satisfied?)	YES	Go to step 6.
		NO	After replacement of ceramic filter, perform resetting the DPF-related information and go to step 7.

<Step 5 inspection diagram>

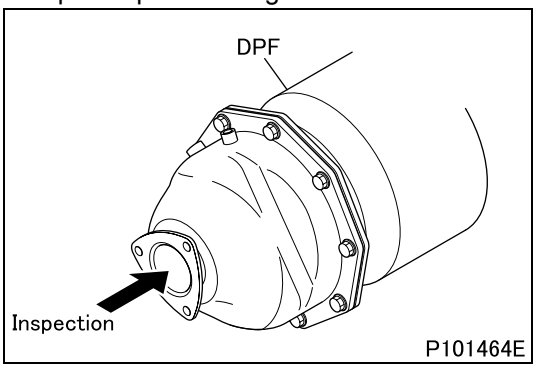

Step 6	Inspection items		Inspection of diesel particulate filter unit for clogging and cleaning of the diesel particulate filter unit
	Maintenance item		See Gr15 “Diesel Particulate Filter Unit Inspection for Clogging and Cleaning the Diesel Particulate Filter Unit”.
	Inspection condition		Perform the following preparatory works. • Place the transmission in neutral. (place the automatic transmission in P range) • Turn the steering wheel in neutral position and securely apply the parking brake. • Turn off air conditioner not to increase the engine speed. • Check diagnosis code of each electronic control system. If any fault exists, rectify it. • Resetting the DPF-related information (perform “History reset” of Multi-Use Tester) (See Gr15 “Resetting the DPF-related Information”.) • Warm up the engine until the engine coolant has been heated to more than 70°C {158°F}. (verify from Service Data “Engine Coolant Temperature” or “31: Water Temperature”)
	Requirements		This diagnosis code does not occur again.
	Inspection result (Is the judging standard satisfied?)	YES	End of inspection.
		NO	Replacement of electronic control unit

[Fault code]
Diagnosis code: P1411/Flash code: 88
[Monitor]
Diesel particulate filter is overheated.
[Fault (outline)]
- Low signal range check
- High signal range check
- Plausibility

[Diagnosis check]
- Temperature after ceramic diesel particulate filter is monitored and manual filter regeneration is stopped if filter temperature excessively rises.

[Code generation condition]
- Temperature output from DPF temperature sensor 2 remains over 700°C {1292°F} for 10 seconds.
  (Warning lamp is lit and diagnosis code is displayed on first establishment of code generation condition.)

[Diagnosis check timing]
<Fault diagnosis for signals>
- Fault diagnosis is continuously performed during the driving cycle.

<Fault diagnosis by comparison with other information>
- Fault diagnosis is performed only once during the driving cycle.

[Diagnostic requirement]
–

[Control effected by electronic control unit during fault]
- Engine torque is limited.
- Auto cruise control stopped
- Traction control is stopped <Automatic transmission>
- Diesel particulate filter regeneration is stopped.

[Probable cause of trouble]
- Excessive smoke emission (due to malfunction of engine proper, common rail or exhaust gas recirculation system)
- Malfunction of diesel particulate filter regeneration control
- Excessive particulate matter (PM) deposit
- Malfunction of engine electronic control unit

[Recoverability]
- Recovered if signal becomes normal when starter switch is turned OFF to ON (power supply resumed to electronic control unit).
  (Warning lamp is extinguished and diagnosis code is cleared simultaneously with recovery.)

[Electronic Control Unit Connection Diagram]

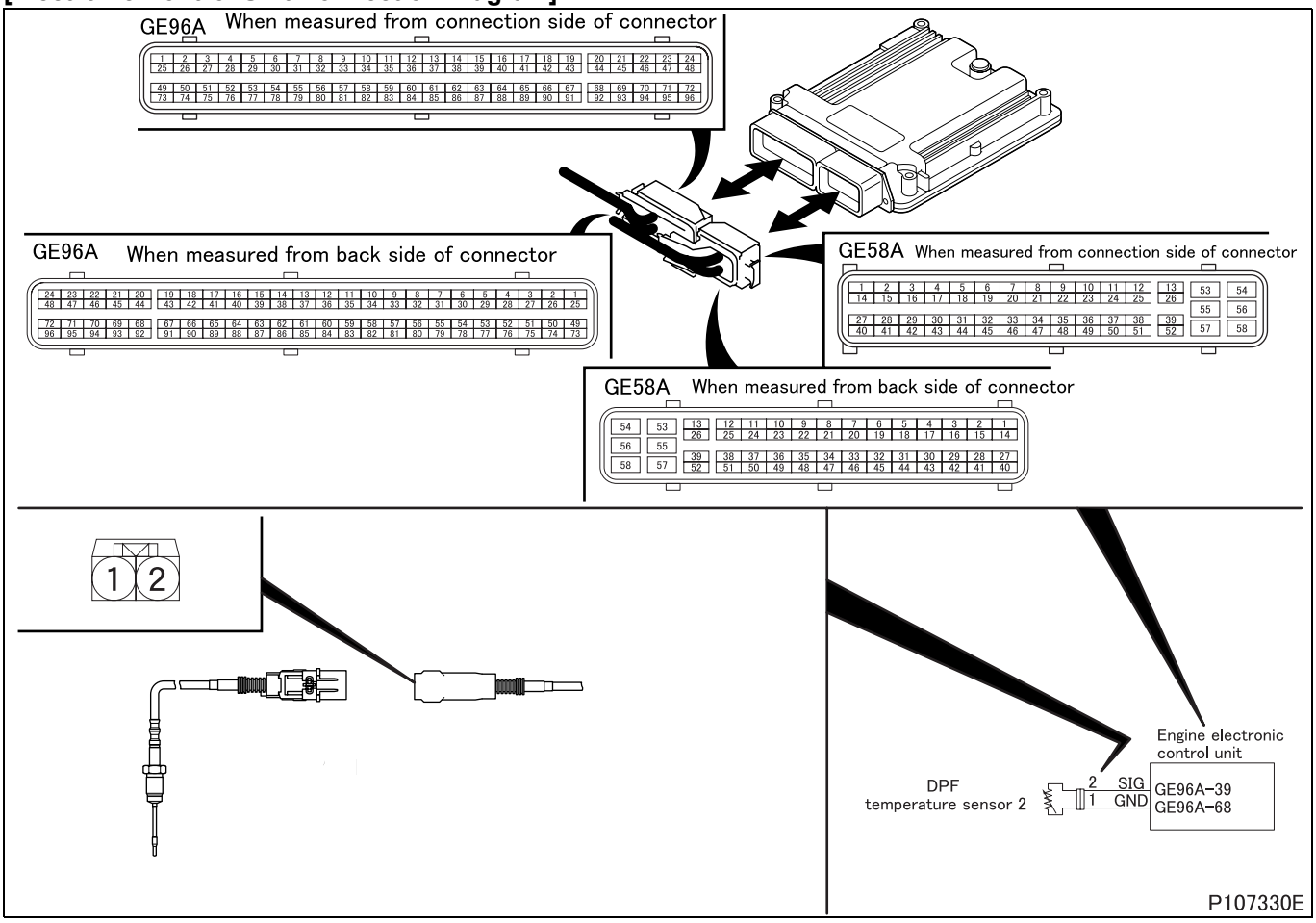

[Parts Identification and Location]

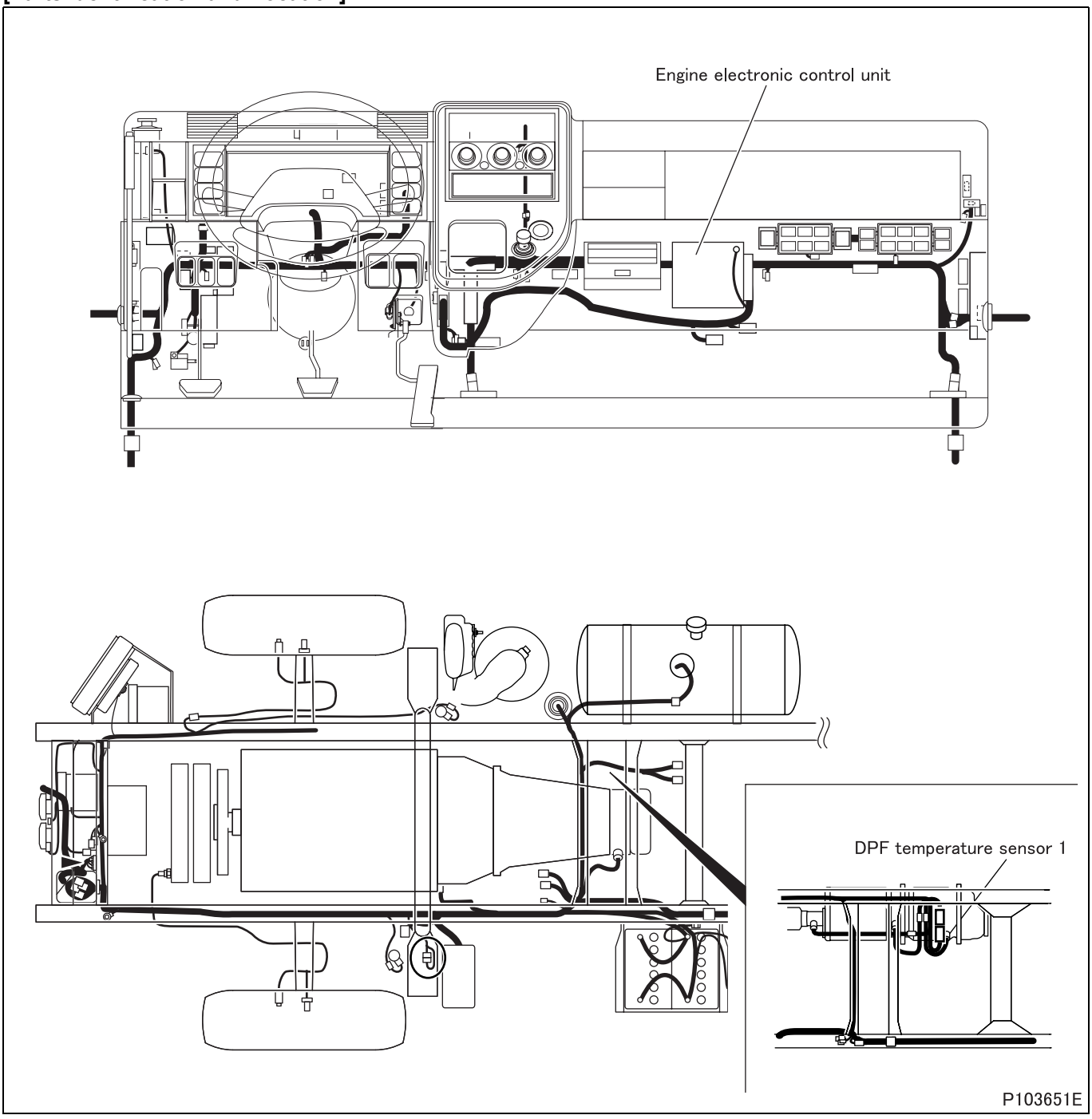

[Fault diagnosis]

- Perform checks in the sequence of the following steps.

Step 1	Inspection items		Inspection by control data
	Maintenance item		Check if following diagnosis codes occur simultaneously. • P0045 “VGT Actuator (Open)” • P0046 “VGT Actuator (Performance)” • P0047 “VGT Actuator (Low)” • P0102 “Airflow Sensor (Low)” • P0103 “Airflow Sensor (High)” • P0426 “EXH Gas Temp SNSR1 (Plausibility)” • P0427 “EXH Gas Temp SNSR1 (Low)” • P0428 “EXH Gas Temp SNSR1 (High)” • P0545 “DPF Temp SNSR (upstream) Low” • P0546 “DPF Temp SNSR (upstream) High” • P1430 “DPF Regeneration Switch” • P1660 “DPF Lamp Control Circuit (Low)” • P2031 “Exhaust Gas Temp” • P2032 “Exhaust Gas Temp (Low)” • P2033 “Exhaust Gas Temp (High)” • P2453 “DPF Diff SNSR (Plausi) & MFF” • P2454 “DPF Diff SNSR (Low) & MFF” • P2455 “DPF Diff SNSR (High) & MFF”
	Inspection condition		Ensure that each sensor mounting condition is free of abnormalities.
	Requirements		Codes occur.
	Inspection result (Is the judging standard satisfied?)	YES	After inspection of diagnosis code that is occurring, go to step 2.
		NO	Go to step 2.

Step 2	Inspection items		Inspection of DPF temperature sensor 2 unit
	Maintenance item		Measure value of resistance between terminal No. 1 and 2.
	Inspection condition		• Put DPF temperature sensor 2 in container filled with engine oil. • Heat the oil to each of the specified temperatures. Stir the oil well while doing so.
	Requirements		• 20°C {68°F} : 241.8 kΩ • 50°C {122°F} : 106.2 $^{+74.3}_{-41.8}$ kΩ • 100°C {212°F} : 33.56 $^{+17.60}_{-10.60}$ kΩ • 150°C {302°F} : 13.90 $^{+5.36}_{-3.60}$ kΩ • 200°C {392°F} : 6.896 $^{+2.064}_{-1.252}$ kΩ
	Inspection result (Is the judging standard satisfied?)	YES	Go to step 3.
		NO	Cleaning of sensor

<Step 2 inspection diagram>

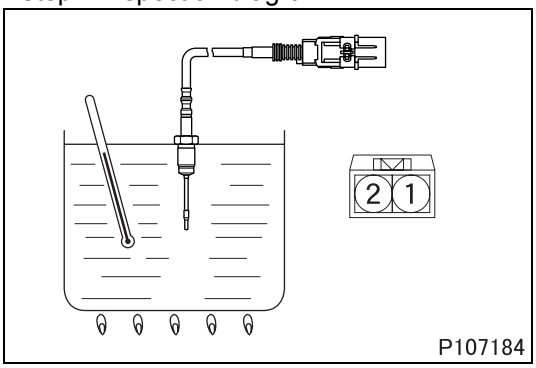

Step 3	Inspection items		Inspection of oil level
	Maintenance item		Inspection of engine oil level
	Inspection condition		Engine is stopped.
	Requirements		Oil level for inspection is not exceeded.
	Inspection result (Is the judging standard satisfied?)	YES	Go to step 4.
		NO	After replacement of oil, go to step 4.

<Step 3 inspection diagram>

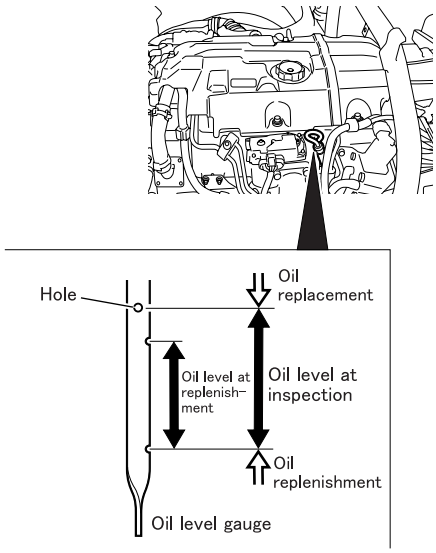

P103677E

Step 4	Inspection items		Inspection of pressure hose
	Maintenance item		Check pressure hose of DPF absolute pressure sensor and DPF pressure sensor (DIFF) for connection and cracks.
	Inspection condition		–
	Requirements		Nothing abnormal detected
	Inspection result (Is the judging standard satisfied?)	YES	Go to step 5.
		NO	After correction and replacement of hose, go to step 5.

Step 5	Inspection items		Unit inspection of diesel particulate filter
	Maintenance item		Check the exhaust passage inside the diesel particulate filter for adhesion of soot in large quantity.
	Inspection condition		Remove diesel particulate filter.
	Requirements		No soot is deposited.
	Inspection result (Is the judging standard satisfied?)	YES	Go to step 6.
		NO	After replacement of ceramic filter, perform resetting the DPF-related information and go to step 7.

<Step 5 inspection diagram>

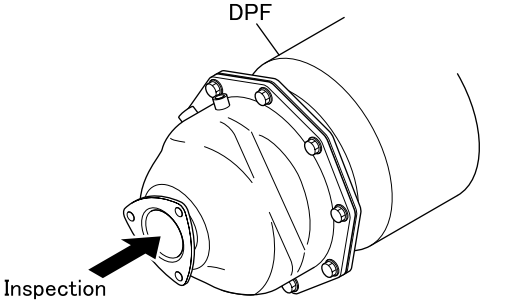

Step 6	Inspection items		Inspection of diesel particulate filter unit for clogging and cleaning of the diesel particulate filter unit
	Maintenance item		See Gr15 “Diesel Particulate Filter Unit Inspection for Clogging and Cleaning the Diesel Particulate Filter Unit”.
	Inspection condition		Perform following preparatory works. • Place the transmission in neutral. (place the automatic transmission in P range) • Turn the steering wheel in neutral position and securely apply the parking brake. • Turn off air conditioner not to increase the engine speed. • Check diagnosis code of each electronic control system. If any fault exists, rectify it. • Resetting the DPF-related information (perform “History reset” of Multi-Use Tester) (See Gr15 “Resetting the DPF-related information”.) • Warm up the engine until the engine coolant has been heated to more than 70°C {158°F}. (verify from Service Data “Engine Coolant Temperature” or “31: Water Temperature”)
	Requirements		This diagnosis code does not occur again.
	Inspection result (Is the judging standard satisfied?)	YES	End of inspection.
		NO	Replacement of electronic control unit

[Fault code]
Diagnosis code: P1412/Flash code: 92
[Monitor]
Temperature increase is insufficient for automatic diesel particulate filter regeneration control
[Fault (outline)]
Plausibility
[Diagnosis check]
- Temperature in diesel particulate filter during automatic filter regeneration is monitored through DPF temperature sensor 1.

[Code generation condition]
- Abnormality is determined if the remaining of temperature below 250°C {482°F} during 5 km {3.11 miles} of running after start of automatic diesel particulate filter regeneration is repeated three times.

[Diagnosis check timing]
- Fault diagnosis is performed only once during the driving cycle.

[Diagnostic requirement]
–

[Control effected by electronic control unit during fault]
- Diesel particulate filter regeneration is stopped (manual regeneration is feasible)

[Probable cause of trouble]
- Malfunction of diesel particulate filter regeneration control
- Malfunction of DPF temperature sensor 1
- Malfunction of engine electronic control unit
- Malfunction of common rail
- Malfunction of diesel particulate filter (front oxidation catalyst)

[Recoverability]
- Recovered if signal becomes normal when starter switch is turned OFF to ON (power supply resumed to electronic control unit).
  (Warning lamp is extinguished and diagnosis code is cleared simultaneously with recovery.)

[Electronic Control Unit Connection Diagram]

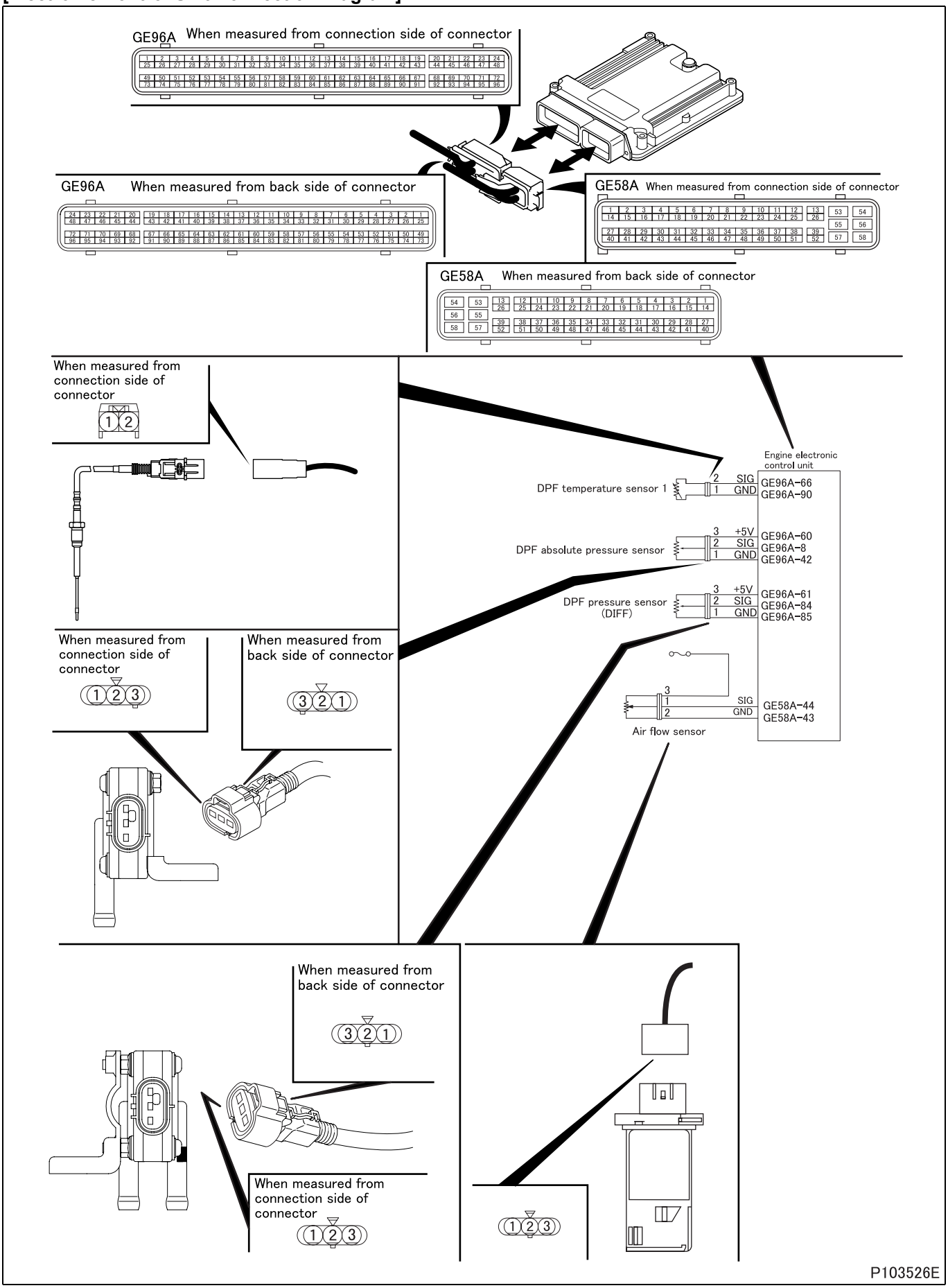

[Parts Identification and Location]

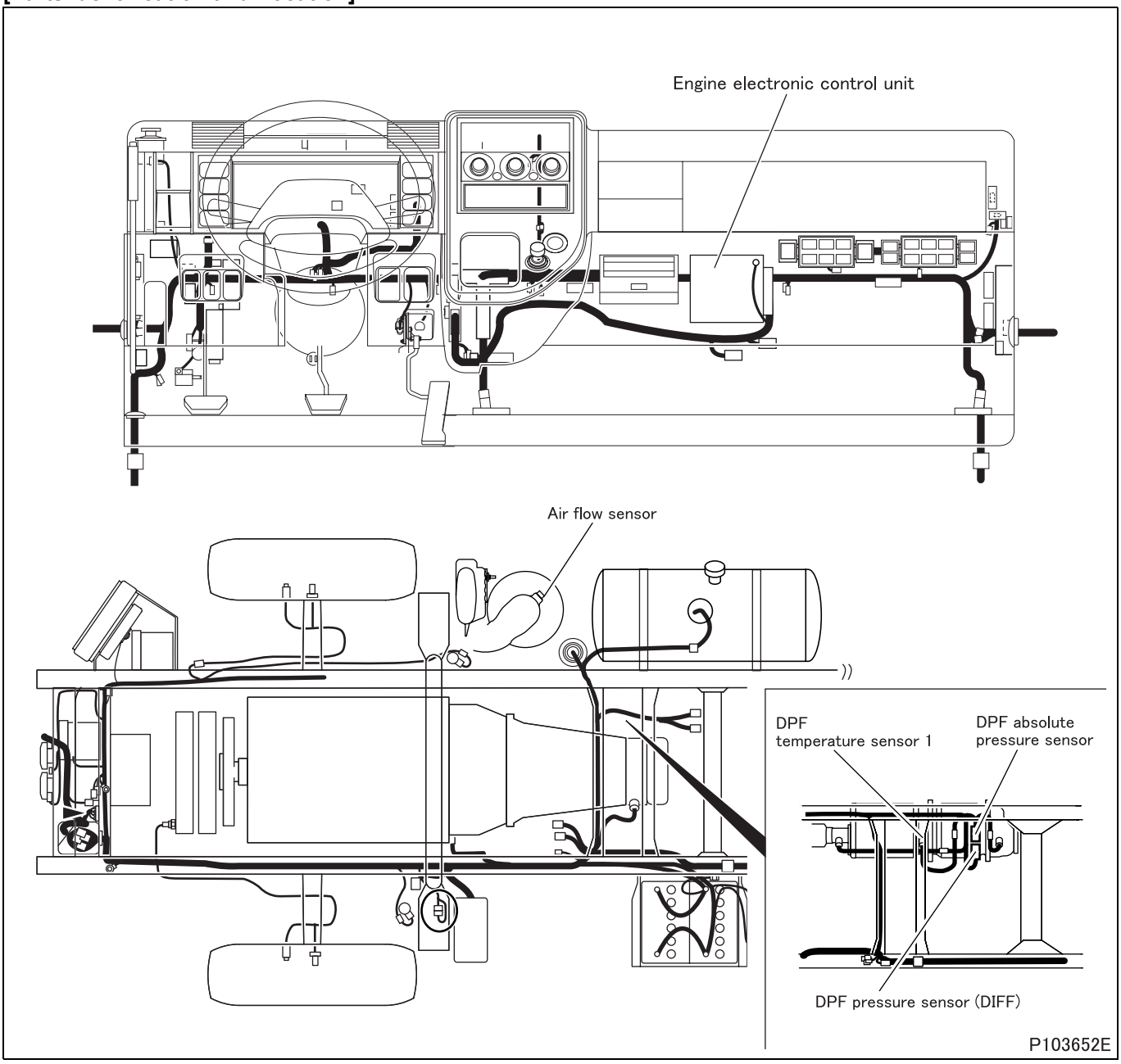

[Fault diagnosis]

- Perform checks in the sequence of the following steps.

Step 1	Inspection items		Inspection by control data
	Maintenance item		Check if following diagnosis codes occur simultaneously. • P0045 “VGT Actuator (Open)” • P0046 “VGT Actuator (Performance)” • P0047 “VGT Actuator (Low)” • P0102 “Airflow Sensor (Low)” • P0103 “Airflow Sensor (High)” • P0426 “EXH Gas Temp SNSR1 (Plausibility)” • P0427 “EXH Gas Temp SNSR1 (Low)” • P0428 “EXH Gas Temp SNSR1 (High)” • P0545 “DPF Temp SNSR (upstream) Low” • P0546 “DPF Temp SNSR (upstream) High” • P1430 “DPF Regeneration Switch” • P1660 “DPF Lamp Control Circuit (Low)” • P2031 “Exhaust Gas Temp” • P2032 “Exhaust Gas Temp (Low)” • P2033 “Exhaust Gas Temp (High)” • P2453 “DPF Diff SNSR (Plausi) & MFF” • P2454 “DPF Diff SNSR (Low) & MFF” • P2455 “DPF Diff SNSR (High) & MFF”
	Inspection condition		Ensure that each sensor mounting condition is free of abnormalities.
	Requirements		Codes occur.
	Inspection result (Is the judging standard satisfied?)	YES	After inspection of diagnosis code that is occurring, go to step 2.
		NO	Go to step 2.

Step 2	Inspection items		Inspection of DPF temperature sensor 1 unit
	Maintenance item		Measure value of resistance between terminal No. 1 and 2.
	Inspection condition		• Put DPF temperature sensor 1 in container filled with engine oil. • Heat the oil to each of the specified temperatures. Stir the oil well while doing so.
	Requirements		• 20°C {68°F} : 241.8 kΩ • 50°C {122°F} : 106.2 $^{+74.3}_{-41.8}$ kΩ • 100°C {212°F} : 33.56 $^{+17.60}_{-10.60}$ kΩ • 150°C {302°F} : 13.90 $^{+5.36}_{-3.60}$ kΩ • 200°C {392°F} : 6.896 $^{+2.064}_{-1.252}$ kΩ
	Inspection result (Is the judging standard satisfied?)	YES	Go to step 3.
		NO	Cleaning of sensor

<Step 2 inspection diagram>

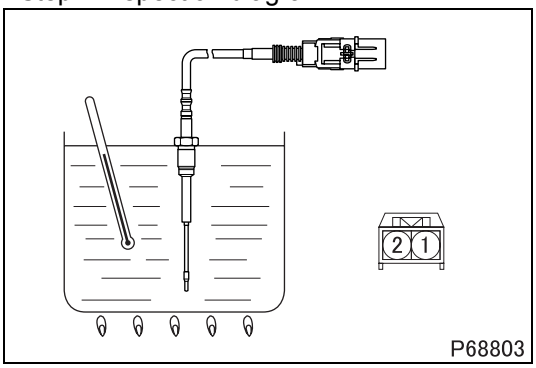

Step 3	Inspection items		Inspection of oil level
	Maintenance item		Inspection of engine oil level
	Inspection condition		Engine is stopped.
	Requirements		Oil level for inspection is not exceeded.
	Inspection result (Is the judging standard satisfied?)	YES	Go to step 4.
		NO	After replacement of oil, go to step 4.

<Step 3 inspection diagram>

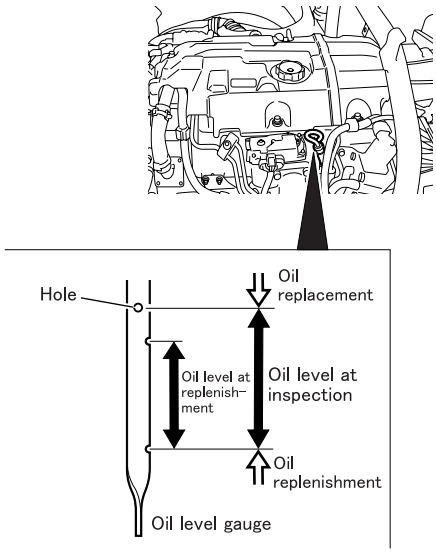

P103677E

Step 4	Inspection items		Inspection of pressure hose
	Maintenance item		Check pressure hose of DPF absolute pressure sensor and DPF pressure sensor (DIFF) for connection and cracks.
	Inspection condition		–
	Requirements		Nothing abnormal detected
	Inspection result (Is the judging standard satisfied?)	YES	Go to step 5.
		NO	Correction and replacement of hose

Step 5	Inspection items		Inspection of sensor unit
	Maintenance item		Measure value of voltage between connector terminal No. 2 (+) and 1 (–).
	Inspection condition		• Apply voltage DC 5 V across terminals No. 3 (+) and 1 (–). • Gradually increase applied air pressure.
	Requirements		• 0 ± 3.5 kPa {0 ± 0.5 psi, 0 ± 0.04 kgf/cm^2}: 1 V • 100 ± 3.5 kPa {15 ± 0.5 psi, 1.02 ± 0.04 kgf/cm^2}: 4.5 V
	Inspection result (Is the judging standard satisfied?)	YES	Go to step 6.
		NO	Replacement of sensor

<Step 5 inspection diagram>

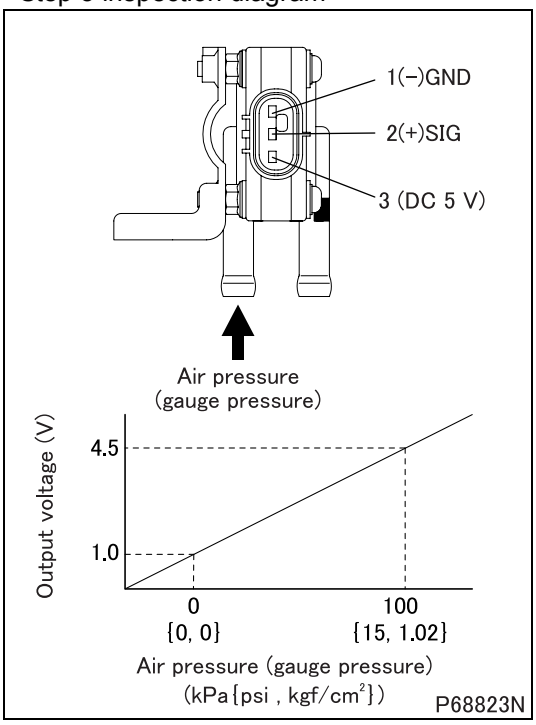

Step 6	Inspection items		Inspection of sensor unit
	Maintenance item		Since inspection of single part is not easy, whether characteristics are deteriorated or not must be checked for the sensor mounted on the current vehicle by measuring and comparing the amount of sensor intake air of the sensor currently mounted on vehicle and that replaced with new one by the service data. **(1) Prepare for inspection** • Clean or replace air cleaner element. • Prepare a new air flow sensor. • Warm up the engine fully. **(2) Measure the intake air of current sensor** • Keep pressing the accelerator pedal until it bottom the stopper bolt from the idling state. (no load maximum rotation) • Measure the following items from among “Service data”. **<General Scanning Tool used>** • Engine speed: “Ne” (rpm) • Intake air flow rate: “Air Flow Rate from MAFS” (g/s) **<Multi-Use Tester used>** • Engine speed: 01 “Engine Revolution” (rpm) • Intake air flow rate: 60 “Air mass flow” (g/s) **(3) Measure the intake air of new sensor** • Replace the currently mounted sensor with a new sensor. • Keep pressing the accelerator pedal until it bottom the stopper bolt from the idling state. (no load maximum rotation) • Measure intake air flow at the same rpm as that of engine revolution in item (2) of “Service data”. **(4) Comparison whether characteristics are deteriorated** • Calculate the characteristics deterioration factor (%) by the following equation. • Characteristics deterioration factor (%) = (intake air of new item – current intake air) × 100/intake air of new item.
	Inspection condition		–
	Requirements		10% or less
	Inspection result (Is the judging standard satisfied?)	YES	Go to step 7.
		NO	Replacement of sensor

Step 7	Inspection items		Inspection by control data
	Maintenance item		Perform actuator test item No. B2 “Fuel Leak Check”.
	Inspection condition		Engine start: At idle
	Requirements		There is no leak from injectors (four).
	Inspection result (Is the judging standard satisfied?)	YES	Replacement of diesel particulate filter
		NO	Replacement of injector

[Fault code]
Diagnosis code: P1413/Flash code: 92
[Monitor]
Temperature increase is insufficient for automatic diesel particulate filter regeneration control
[Fault (outline)]
Plausibility
[Diagnosis check]
- Temperature in diesel particulate filter during automatic filter regeneration is monitored through DPF temperature sensor 1.

[Code generation condition]
- Abnormality is determined if the remaining of temperature below 500°C {932°F} for 30 minutes after start of automatic diesel particulate filter regeneration is repeated three times.

[Diagnosis check timing]
- Fault diagnosis is performed only once during the driving cycle.

[Diagnostic requirement]
–

[Control effected by electronic control unit during fault]
- Diesel particulate filter regeneration is stopped (manual regeneration is feasible).

[Probable cause of trouble]
- Malfunction of diesel particulate filter regeneration control
- Malfunction of DPF temperature sensor 1
- Malfunction of engine electronic control unit
- Malfunction of common rail
- Malfunction of diesel particulate filter (front oxidation catalyst)

[Recoverability]
- Recovered if signal becomes normal when starter switch is turned OFF to ON (power supply resumed to electronic control unit).
  (Warning lamp is extinguished and diagnosis code is cleared simultaneously with recovery.)

[Electronic Control Unit Connection Diagram]

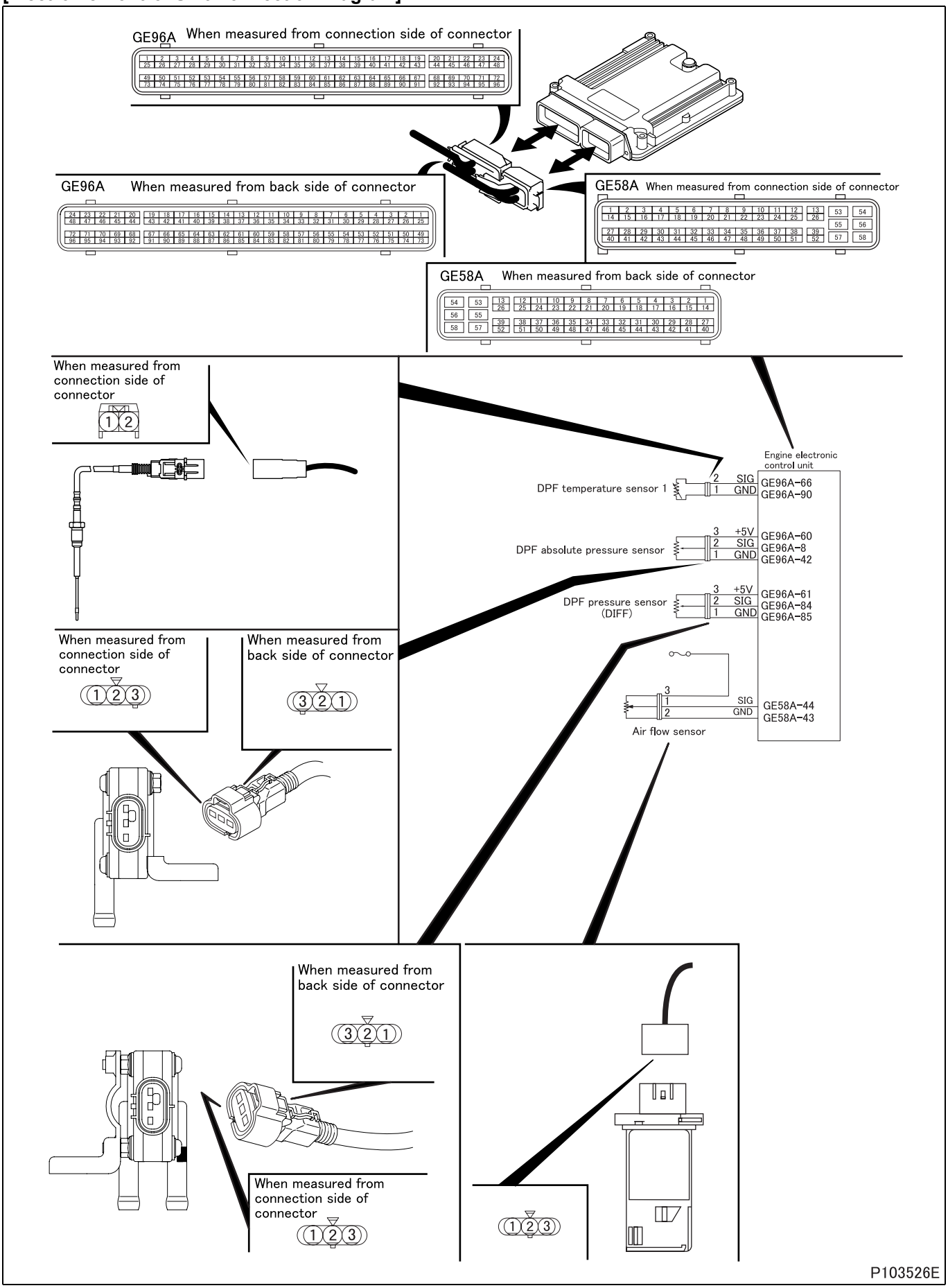

P103526E

[Parts Identification and Location]

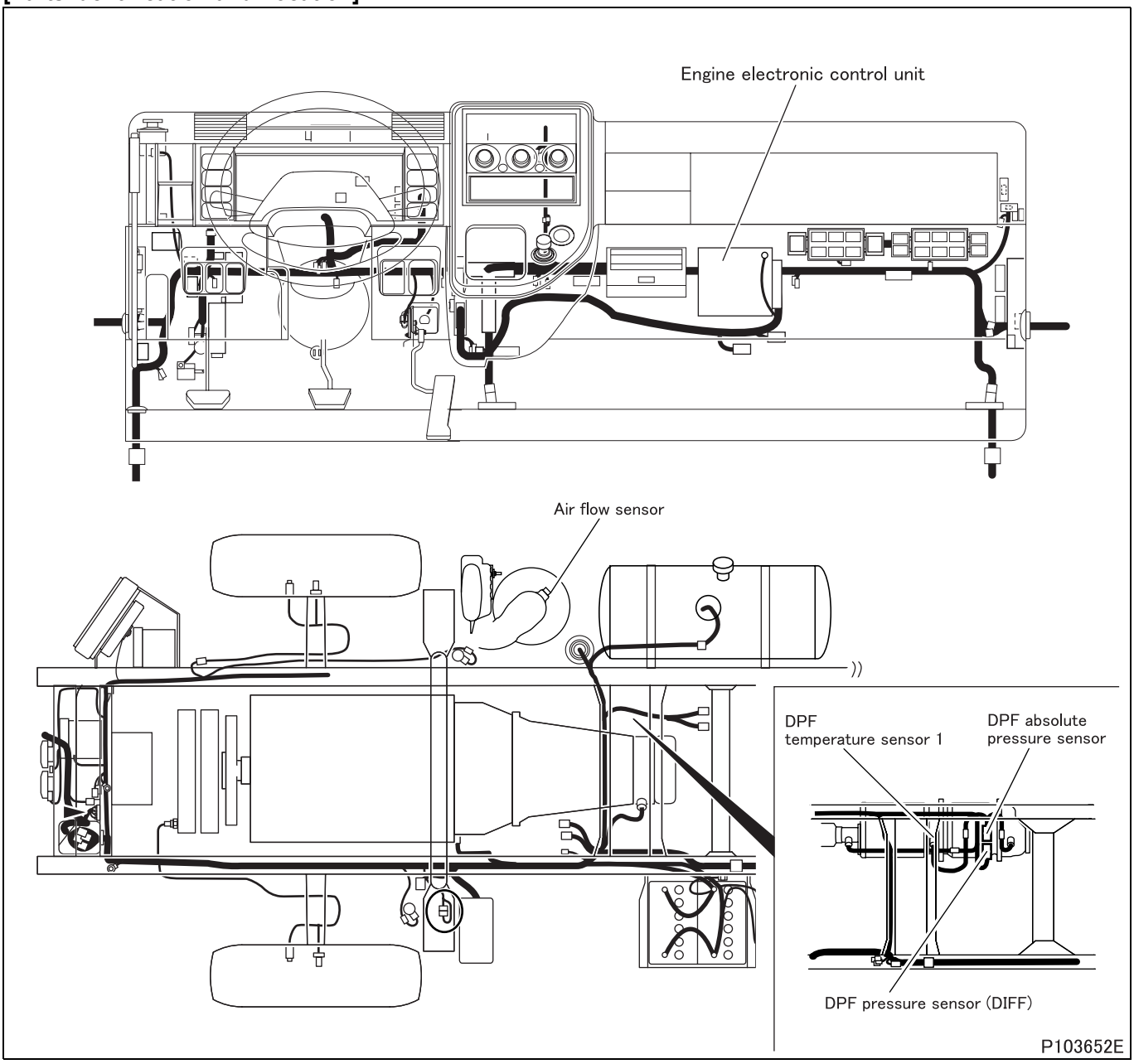

[Fault diagnosis]

- Perform checks in the sequence of the following steps.

Step 1	Inspection items		Inspection by control data
	Maintenance item		Check if following diagnosis codes occur simultaneously. • P0045 “VGT Actuator (Open)” • P0046 “VGT Actuator (Performance)” • P0047 “VGT Actuator (Low)” • P0102 “Airflow Sensor (Low)” • P0103 “Airflow Sensor (High)” • P0426 “EXH Gas Temp SNSR1 (Plausibility)” • P0427 “EXH Gas Temp SNSR1 (Low)” • P0428 “EXH Gas Temp SNSR1 (High)” • P0545 “DPF Temp SNSR (upstream) Low” • P0546 “DPF Temp SNSR (upstream) High” • P1430 “DPF Regeneration Switch” • P1660 “DPF Lamp Control Circuit (Low)” • P2031 “Exhaust Gas Temp” • P2032 “Exhaust Gas Temp (Low)” • P2033 “Exhaust Gas Temp (High)” • P2453 “DPF Diff SNSR (Plausi) & MFF” • P2454 “DPF Diff SNSR (Low) & MFF” • P2455 “DPF Diff SNSR (High) & MFF”
	Inspection condition		Ensure that each sensor mounting condition is free of abnormalities.
	Requirements		Codes occur.
	Inspection result (Is the judging standard satisfied?)	YES	After inspection of diagnosis code that is occurring, go to step 2.
		NO	Go to step 2.

Step 2	Inspection items		Inspection of DPF temperature sensor 1 unit
	Maintenance item		Measure value of resistance between terminal No. 1 and 2.
	Inspection condition		• Put DPF temperature sensor 1 in container filled with engine oil. • Heat the oil to each of the specified temperatures. Stir the oil well while doing so.
	Requirements		• 20°C {68°F} : 241.8 kΩ • 50°C {122°F} : 106.2 $^{+74.3}_{-41.8}$ kΩ • 100°C {212°F} : 33.56 $^{+17.60}_{-10.60}$ kΩ • 150°C {302°F} : 13.90 $^{+5.36}_{-3.60}$ kΩ • 200°C {392°F} : 6.896 $^{+2.064}_{-1.252}$ kΩ
	Inspection result (Is the judging standard satisfied?)	YES	Go to step 3.
		NO	Cleaning of sensor

<Step 2 inspection diagram>

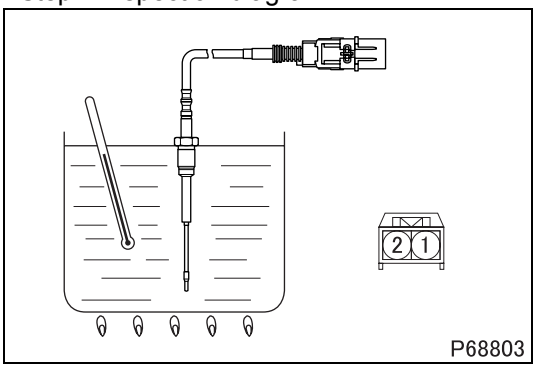

Step 3	Inspection items		Inspection of oil level
	Maintenance item		Inspection of engine oil level
	Inspection condition		Engine is stopped.
	Requirements		Oil level for inspection is not exceeded.
	Inspection result (Is the judging standard satisfied?)	YES	Go to step 4.
		NO	After replacement of oil, go to step 4.

<Step 3 inspection diagram>

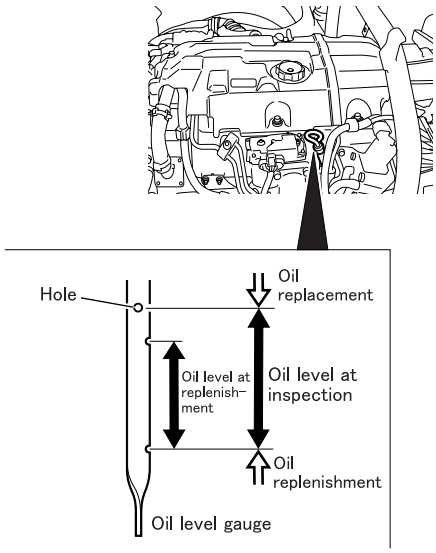

P103677E

Step 4	Inspection items		Inspection of pressure hose
	Maintenance item		Check pressure hose of DPF absolute pressure sensor and DPF pressure sensor (DIFF) for connection and cracks.
	Inspection condition		–
	Requirements		Nothing abnormal detected
	Inspection result (Is the judging standard satisfied?)	YES	Go to step 5.
		NO	Correction and replacement of hose

Step 5	Inspection items		Inspection of sensor unit
	Maintenance item		Measure value of voltage between connector terminal No. 2 (+) and 1 (–).
	Inspection condition		• Apply voltage DC 5 V across terminals No. 3 (+) and 1 (–). • Gradually increase applied air pressure.
	Requirements		• 0 ± 3.5 kPa {0 ± 0.5 psi, 0 ± 0.04 kgf/cm^2}: 1 V • 100 ± 3.5 kPa {15 ± 0.5 psi, 1.02 ± 0.04 kgf/cm^2}: 4.5 V
	Inspection result (Is the judging standard satisfied?)	YES	Go to step 6.
		NO	Replacement of sensor

<Step 5 inspection diagram>

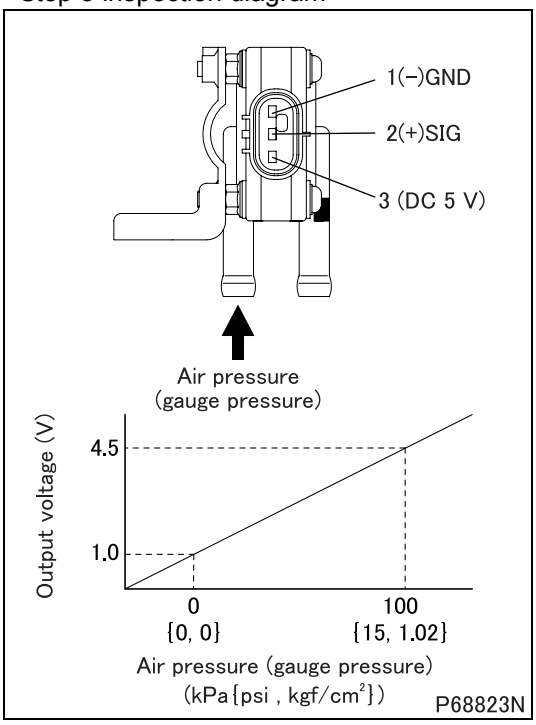

Step 6	Inspection items		Inspection of sensor unit
	Maintenance item		Since inspection of single part is not easy, whether characteristics are deteriorated or not must be checked for the sensor mounted on the current vehicle by measuring and comparing the amount of sensor intake air of the sensor currently mounted on vehicle and that replaced with new one by the service data. **(1) Prepare for inspection** • Clean or replace air cleaner element. • Prepare a new air flow sensor. • Warm up the engine fully. **(2) Measure the intake air of current sensor** • Keep pressing the accelerator pedal until it bottom the stopper bolt from the idling state. (no load maximum rotation) • Measure the following items from among “Service data”. **<General Scanning Tool used>** • Engine speed: “Ne” (rpm) • Intake air flow rate: “Air Flow Rate from MAFS” (g/s) **<Multi-Use Tester used>** • Engine speed: 01 “Engine Revolution” (rpm) • Intake air flow rate: 60 “Air mass flow” (g/s) **(3) Measure the intake air of new sensor** • Replace the currently mounted sensor with a new sensor. • Keep pressing the accelerator pedal until it bottom the stopper bolt from the idling state. (no load maximum rotation) • Measure intake air flow at the same rpm as that of engine revolution in item (2) of “Service data”. **(4) Comparison whether characteristics are deteriorated** • Calculate the characteristics deterioration factor (%) by the following equation. • Characteristics deterioration factor (%) = (intake air of new item – current intake air) × 100/intake air of new item.
	Inspection condition		–
	Requirements		10% or less
	Inspection result (Is the judging standard satisfied?)	YES	Go to step 7.
		NO	Replacement of sensor

Step 7	Inspection items		Inspection by control data
	Maintenance item		Perform actuator test item No. B2 “Fuel Leak Check”.
	Inspection condition		Engine start: At idle
	Requirements		There is no leak from injectors (four).
	Inspection result (Is the judging standard satisfied?)	YES	Replacement of diesel particulate filter
		NO	Replacement of injector

[Fault code]
Diagnosis code: P1414/Flash code: 92
[Monitor]
Temperature increase is insufficient for automatic diesel particulate filter regeneration control
[Fault (outline)]
Plausibility
[Diagnosis check]
- Temperature in diesel particulate filter during automatic filter regeneration is monitored through DPF temperature sensor 1.

[Code generation condition]
- Abnormality is determined if the remaining of temperature over 620°C {1148°F} for 10 minutes after start of automatic diesel particulate filter regeneration is repeated three times.

[Diagnosis check timing]
- Fault diagnosis is performed only once during the driving cycle.

[Diagnostic requirement]
–

[Control effected by electronic control unit during fault]
- Diesel particulate filter regeneration is stopped (manual regeneration is feasible).

[Probable cause of trouble]
- Malfunction of diesel particulate filter regeneration control
- Malfunction of DPF temperature sensor 1
- Malfunction of engine electronic control unit
- Malfunction of common rail
- Malfunction of diesel particulate filter (front oxidation catalyst)

[Recoverability]
- Recovered if signal becomes normal when starter switch is turned OFF to ON (power supply resumed to electronic control unit).
  (Warning lamp is extinguished and diagnosis code is cleared simultaneously with recovery.)

[Electronic Control Unit Connection Diagram]

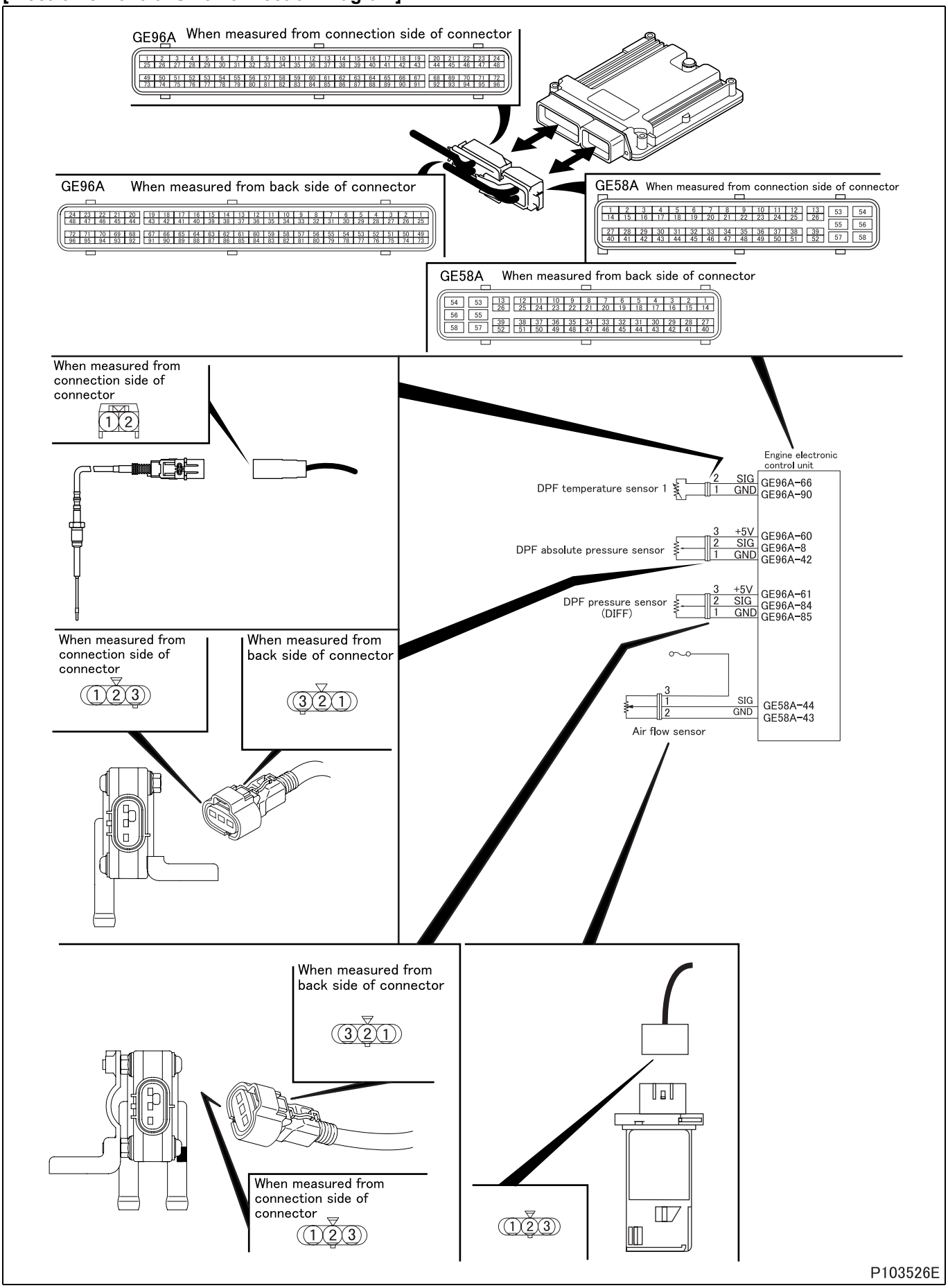

[Parts Identification and Location]

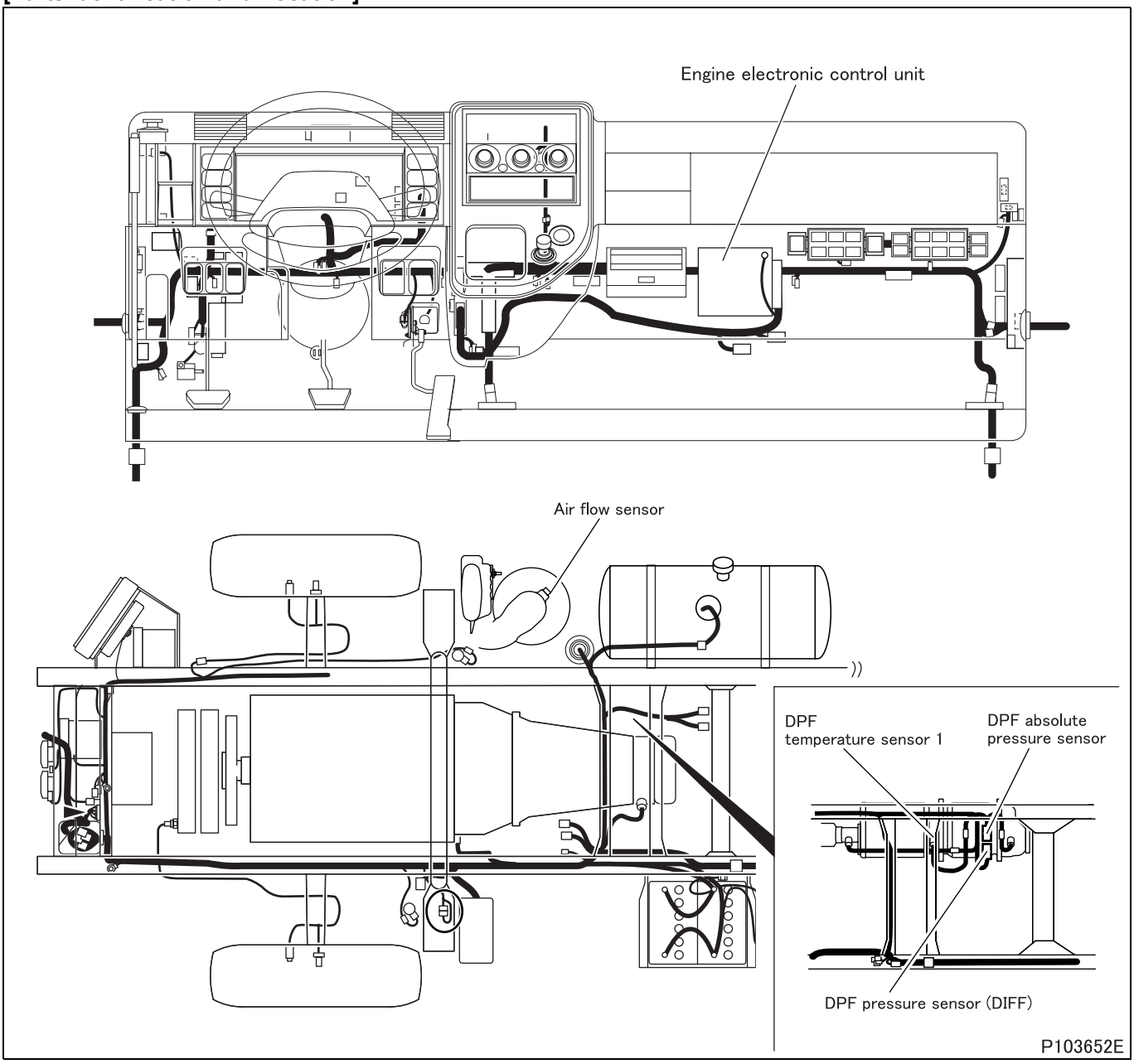

[Fault diagnosis]

- Perform checks in the sequence of the following steps.

Step 1	Inspection items		Inspection by control data
	Maintenance item		Check if following diagnosis codes occur simultaneously. • P0045 “VGT Actuator (Open)” • P0046 “VGT Actuator (Performance)” • P0047 “VGT Actuator (Low)” • P0102 “Airflow Sensor (Low)” • P0103 “Airflow Sensor (High)” • P0426 “EXH Gas Temp SNSR1 (Plausibility)” • P0427 “EXH Gas Temp SNSR1 (Low)” • P0428 “EXH Gas Temp SNSR1 (High)” • P0545 “DPF Temp SNSR (upstream) Low” • P0546 “DPF Temp SNSR (upstream) High” • P1430 “DPF Regeneration Switch” • P1660 “DPF Lamp Control Circuit (Low)” • P2031 “Exhaust Gas Temp” • P2032 “Exhaust Gas Temp (Low)” • P2033 “Exhaust Gas Temp (High)” • P2453 “DPF Diff SNSR (Plausi) & MFF” • P2454 “DPF Diff SNSR (Low) & MFF” • P2455 “DPF Diff SNSR (High) & MFF”
	Inspection condition		Ensure that each sensor mounting condition is free of abnormalities.
	Requirements		Codes occur.
	Inspection result (Is the judging standard satisfied?)	YES	After inspection of diagnosis code that is occurring, go to step 2.
		NO	Go to step 2.

Step 2	Inspection items		Inspection of DPF temperature sensor 1 unit
	Maintenance item		Measure value of resistance between terminal No. 1 and 2.
	Inspection condition		• Put DPF temperature sensor 1 in container filled with engine oil. • Heat the oil to each of the specified temperatures. Stir the oil well while doing so.
	Requirements		• 20°C {68°F} : 241.8 kΩ • 50°C {122°F} : 106.2 $^{+74.3}_{-41.8}$ kΩ • 100°C {212°F} : 33.56 $^{+17.60}_{-10.60}$ kΩ • 150°C {302°F} : 13.90 $^{+5.36}_{-3.60}$ kΩ • 200°C {392°F} : 6.896 $^{+2.064}_{-1.252}$ kΩ
	Inspection result (Is the judging standard satisfied?)	YES	Go to step 3.
		NO	Cleaning of sensor

<Step 2 inspection diagram>

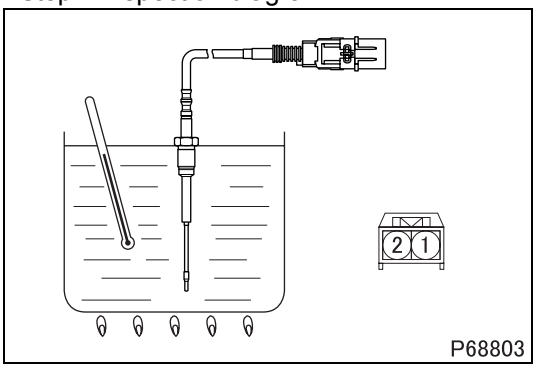

Step 3	Inspection items		Inspection of oil level
	Maintenance item		Inspection of engine oil level
	Inspection condition		Engine is stopped.
	Requirements		Oil level for inspection is not exceeded.
	Inspection result (Is the judging standard satisfied?)	YES	Go to step 4.
		NO	After replacement of oil, go to step 4.

<Step 3 inspection diagram>

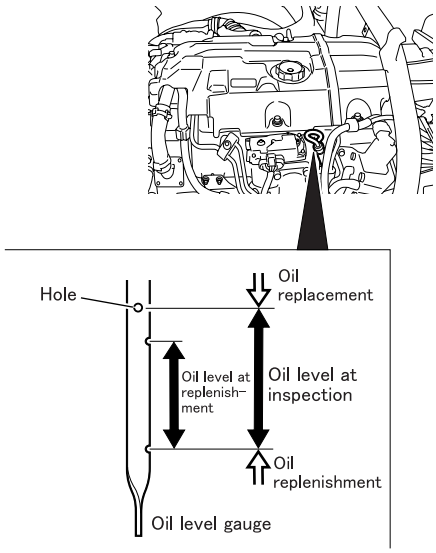

P103677E

Step 4	Inspection items		Inspection of pressure hose
	Maintenance item		Check pressure hose of DPF absolute pressure sensor and DPF pressure sensor (DIFF) for connection and cracks.
	Inspection condition		–
	Requirements		Nothing abnormal detected
	Inspection result (Is the judging standard satisfied?)	YES	Go to step 5.
		NO	Correction and replacement of hose

Step 5	Inspection items		Inspection of sensor unit
	Maintenance item		Measure value of voltage between connector terminal No. 2 (+) and 1 (–).
	Inspection condition		• Apply voltage DC 5 V across terminals No. 3 (+) and 1 (–). • Gradually increase applied air pressure.
	Requirements		• 0 ± 3.5 kPa {0 ± 0.5 psi, 0 ± 0.04 kgf/cm^2}: 1 V • 100 ± 3.5 kPa {15 ± 0.5 psi, 1.02 ± 0.04 kgf/cm^2}: 4.5 V
	Inspection result (Is the judging standard satisfied?)	YES	Go to step 6.
		NO	Replacement of sensor

<Step 5 inspection diagram>

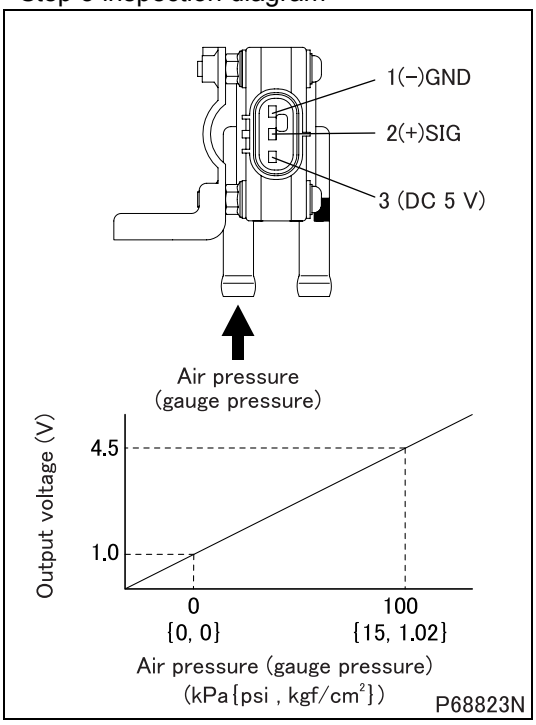

Step 6	Inspection items		Inspection of sensor unit
	Maintenance item		Since inspection of single part is not easy, whether characteristics are deteriorated or not must be checked for the sensor mounted on the current vehicle by measuring and comparing the amount of sensor intake air of the sensor currently mounted on vehicle and that replaced with new one by the service data. **(1) Prepare for inspection** • Clean or replace air cleaner element. • Prepare a new air flow sensor. • Warm up the engine fully. **(2) Measure the intake air of current sensor** • Keep pressing the accelerator pedal until it bottom the stopper bolt from the idling state. (no load maximum rotation) • Measure the following items from among “Service data”. **<General Scanning Tool used>** • Engine speed: “Ne” (rpm) • Intake air flow rate: “Air Flow Rate from MAFS” (g/s) **<Multi-Use Tester used>** • Engine speed: 01 “Engine Revolution” (rpm) • Intake air flow rate: 60 “Air mass flow” (g/s) **(3) Measure the intake air of new sensor** • Replace the currently mounted sensor with a new sensor. • Keep pressing the accelerator pedal until it bottom the stopper bolt from the idling state. (no load maximum rotation) • Measure intake air flow at the same rpm as that of engine revolution in item (2) of “Service data”. **(4) Comparison whether characteristics are deteriorated** • Calculate the characteristics deterioration factor (%) by the following equation. • Characteristics deterioration factor (%) = (intake air of new item – current intake air) × 100/intake air of new item.
	Inspection condition		–
	Requirements		10% or less
	Inspection result (Is the judging standard satisfied?)	YES	Go to step 7.
		NO	Replacement of sensor

Step 7	Inspection items		Inspection by control data
	Maintenance item		Perform actuator test item No. B2 “Fuel Leak Check”.
	Inspection condition		Engine start: At idle
	Requirements		There is no leak from injectors (four).
	Inspection result (Is the judging standard satisfied?)	YES	Replacement of diesel particulate filter
		NO	Replacement of injector

[Fault code]
Diagnosis code: P1415/Flash code: 92
[Monitor]
Failure of automatic diesel particulate filter regeneration control
[Fault (outline)]
Plausibility
[Diagnosis check]
- Duration of automatic diesel particulate filter regeneration is monitored.

[Code generation condition]
- Regeneration exceeds specified time. (Warning lamp is lit and diagnosis code is displayed on first establishment of code generation condition.)

[Diagnosis check timing]
- Fault diagnosis is performed only once during the driving cycle.

[Diagnostic requirement]
–

[Control effected by electronic control unit during fault]
- Diesel particulate filter regeneration is stopped (manual regeneration is feasible).

[Probable cause of trouble]
- Malfunction of diesel particulate filter regeneration control
- Malfunction of DPF temperature sensor 1
- Malfunction of engine electronic control unit
- Malfunction of common rail
- Malfunction of diesel particulate filter (front oxidation catalyst)

[Recoverability]
- Recovered if signal becomes normal when starter switch is turned OFF to ON (power supply resumed to electronic control unit).
  (Warning lamp is extinguished and diagnosis code is cleared simultaneously with recovery.)

[Electronic Control Unit Connection Diagram]

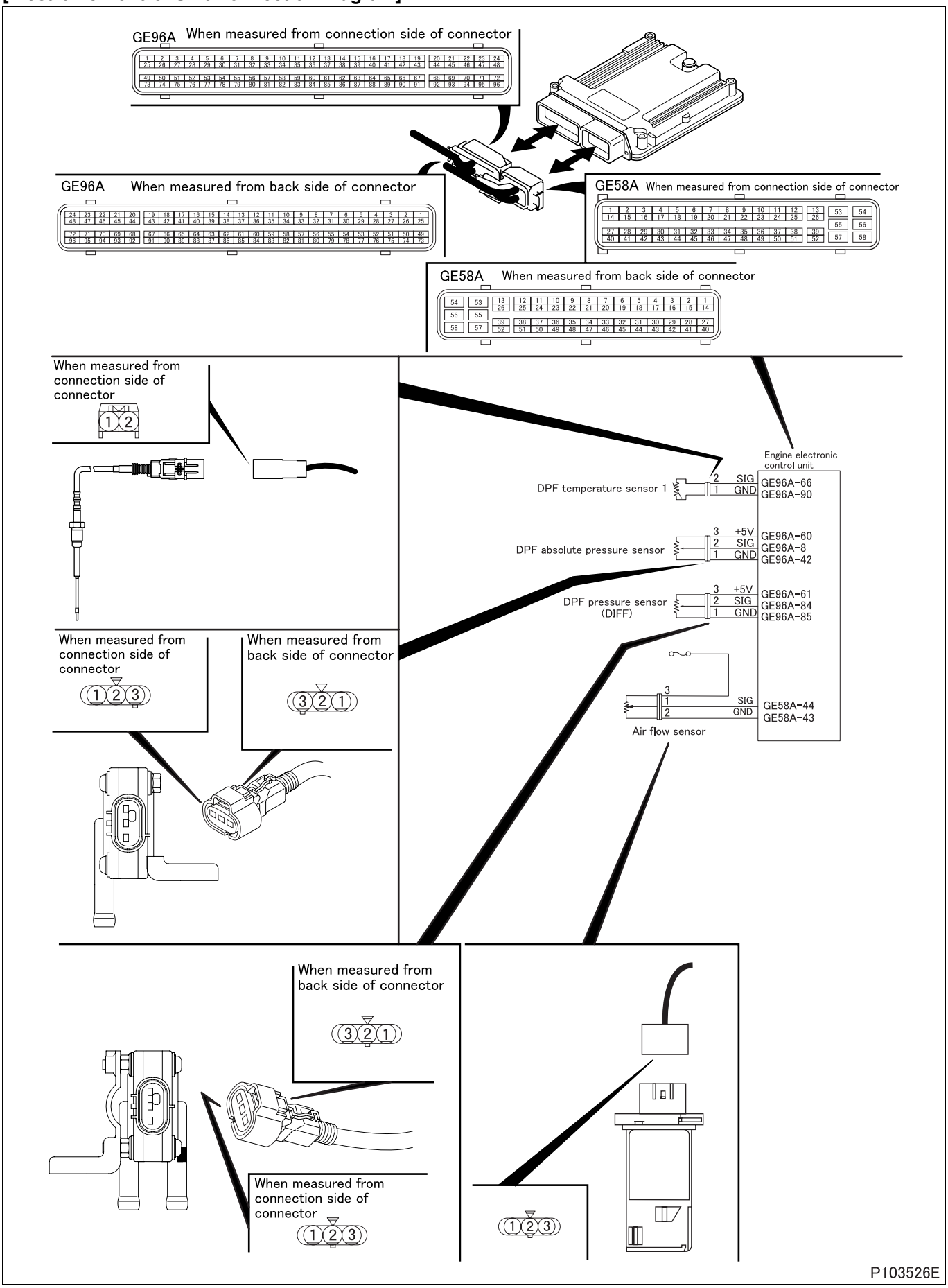

P103526E

[Parts Identification and Location]

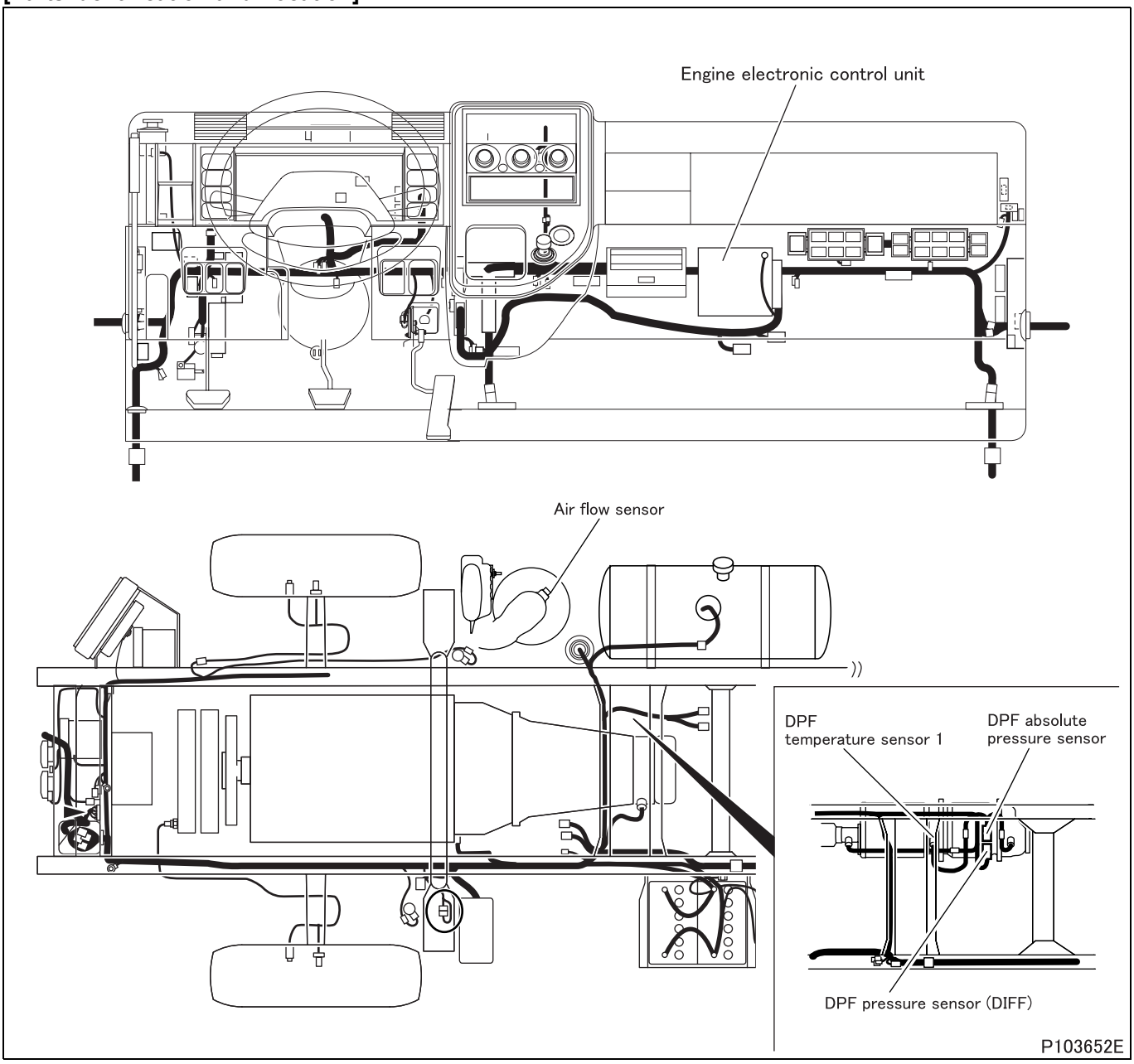

[Fault diagnosis]

- Perform checks in the sequence of the following steps.

Step 1	Inspection items		Inspection by control data
	Maintenance item		Check if following diagnosis codes occur simultaneously. • P0045 “VGT Actuator (Open)” • P0046 “VGT Actuator (Performance)” • P0047 “VGT Actuator (Low)” • P0102 “Airflow Sensor (Low)” • P0103 “Airflow Sensor (High)” • P0426 “EXH Gas Temp SNSR1 (Plausibility)” • P0427 “EXH Gas Temp SNSR1 (Low)” • P0428 “EXH Gas Temp SNSR1 (High)” • P0545 “DPF Temp SNSR (upstream) Low” • P0546 “DPF Temp SNSR (upstream) High” • P1430 “DPF Regeneration Switch” • P1660 “DPF Lamp Control Circuit (Low)” • P2031 “Exhaust Gas Temp” • P2032 “Exhaust Gas Temp (Low)” • P2033 “Exhaust Gas Temp (High)” • P2453 “DPF Diff SNSR (Plausi) & MFF” • P2454 “DPF Diff SNSR (Low) & MFF” • P2455 “DPF Diff SNSR (High) & MFF”
	Inspection condition		Ensure that each sensor mounting condition is free of abnormalities.
	Requirements		Codes occur.
	Inspection result (Is the judging standard satisfied?)	YES	After inspection of diagnosis code that is occurring, go to step 2.
		NO	Go to step 2.

Step 2	Inspection items		Inspection of DPF temperature sensor 1 unit
	Maintenance item		Measure value of resistance between terminal No. 1 and 2.
	Inspection condition		• Put DPF temperature sensor 1 in container filled with engine oil. • Heat the oil to each of the specified temperatures. Stir the oil well while doing so.
	Requirements		• 20°C {68°F} : 241.8 kΩ • 50°C {122°F} : 106.2 $^{+74.3}_{-41.8}$ kΩ • 100°C {212°F} : 33.56 $^{+17.60}_{-10.60}$ kΩ • 150°C {302°F} : 13.90 $^{+5.36}_{-3.60}$ kΩ • 200°C {392°F} : 6.896 $^{+2.064}_{-1.252}$ kΩ
	Inspection result (Is the judging standard satisfied?)	YES	Go to step 3.
		NO	Cleaning of sensor

<Step 2 inspection diagram>

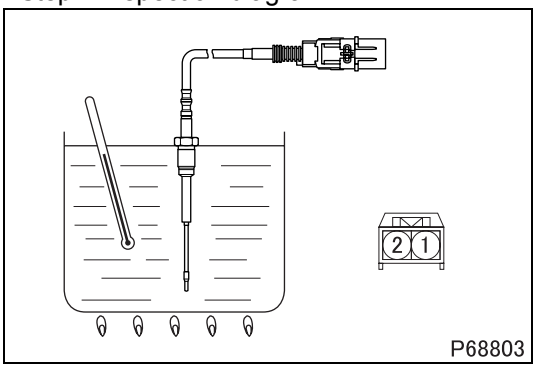

Step 3	Inspection items		Inspection of oil level
	Maintenance item		Inspection of engine oil level
	Inspection condition		Engine stopped
	Requirements		Oil level for inspection is not exceeded.
	Inspection result (Is the judging standard satisfied?)	YES	Go to step 4.
		NO	After replacement of oil, go to step 4

<Step 3 inspection diagram>

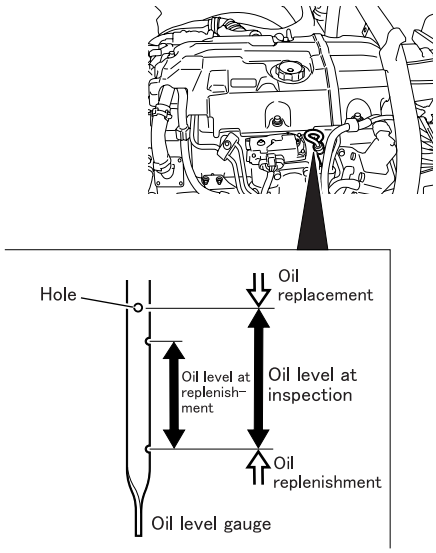

P103677E

Step 4	Inspection items		Inspection of pressure hose
	Maintenance item		Check pressure hose of DPF absolute pressure sensor and DPF pressure sensor (DIFF) for connection and cracks.
	Inspection condition		–
	Requirements		Nothing abnormal detected
	Inspection result (Is the judging standard satisfied?)	YES	Go to step 5.
		NO	Correction and replacement of hose

Step 5	Inspection items		Inspection of sensor unit
	Maintenance item		Measure value of voltage between connector terminal No. 2 (+) and 1 (–).
	Inspection condition		• Apply voltage DC 5 V across terminals No. 3 (+) and 1 (–). • Gradually increase applied air pressure.
	Requirements		• 0 ± 3.5 kPa {0 ± 0.5 psi, 0 ± 0.04 kgf/cm^2}: 1 V • 100 ± 3.5 kPa {15 ± 0.5 psi, 1.02 ± 0.04 kgf/cm^2}: 4.5 V
	Inspection result (Is the judging standard satisfied?)	YES	Go to step 6.
		NO	Replacement of sensor

<Step 5 inspection diagram>

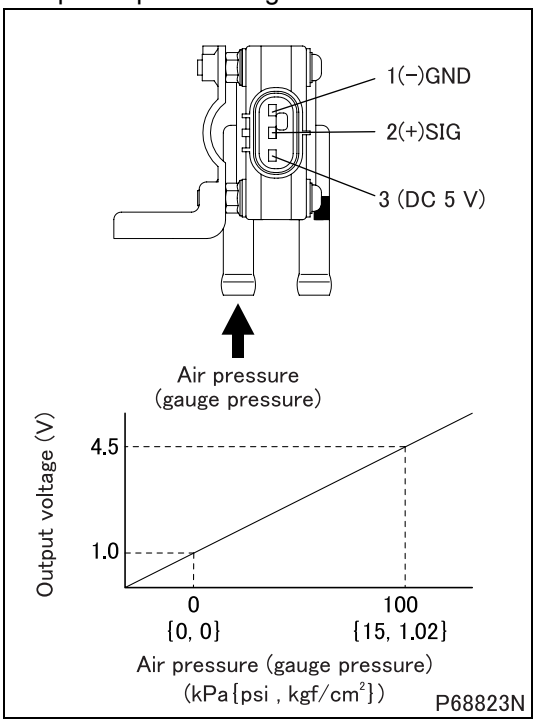

Step 6	Inspection items		Inspection of sensor unit
	Maintenance item		Since inspection of single part is not easy, whether characteristics are deteriorated or not must be checked for the sensor mounted on the current vehicle by measuring and comparing the amount of sensor intake air of the sensor currently mounted on vehicle and that replaced with new one by the service data. **(1) Prepare for inspection** • Clean or replace air cleaner element. • Prepare a new air flow sensor. • Warm up the engine fully. **(2) Measure the intake air of current sensor** • Keep pressing the accelerator pedal until it bottom the stopper bolt from the idling state. (no load maximum rotation) • Measure the following items from among “Service data”. **<General Scanning Tool used>** • Engine speed: “Ne” (rpm) • Intake air flow rate: “Air Flow Rate from MAFS” (g/s) **<Multi-Use Tester used>** • Engine speed: 01 “Engine Revolution” (rpm) • Intake air flow rate: 60 “Air mass flow” (g/s) **(3) Measure the intake air of new sensor** • Replace the currently mounted sensor with a new sensor. • Keep pressing the accelerator pedal until it bottom the stopper bolt from the idling state. (no load maximum rotation) • Measure intake air flow at the same rpm as that of engine revolution in item (2) of “Service data”. **(4) Comparison whether characteristics are deteriorated** • Calculate the characteristics deterioration factor (%) by the following equation. • Characteristics deterioration factor (%) = (intake air of new item – current intake air) × 100/intake air of new item.
	Inspection condition		–
	Requirements		10% or less
	Inspection result (Is the judging standard satisfied?)	YES	Go to step 7.
		NO	Replacement of sensor

Step 7	Inspection items		Inspection by control data
	Maintenance item		Perform actuator test item No. B2 “Fuel Leak Check”.
	Inspection condition		Engine start: At idle
	Requirements		There is no leak from injectors (four).
	Inspection result (Is the judging standard satisfied?)	YES	Replacement of diesel particulate filter
		NO	Replacement of injector

[Fault code]
Diagnosis code: P1416/Flash code: 92
[Monitor]
Temperature increase is insufficient for manual diesel particulate filter regeneration control
[Fault (outline)]
Plausibility
[Diagnosis check]
- Temperature in diesel particulate filter during manual diesel particular filter regeneration is monitored through DPF temperature sensor 1.

[Code generation condition]
- If temperature does not exceed 250°C {482°F} in 5 minutes after start of manual diesel particulate filter regeneration.

[Diagnosis check timing]
- Fault diagnosis is performed only once during the driving cycle.

[Diagnostic requirement]
–

[Control effected by electronic control unit during fault]
- Diesel particulate filter regeneration is stopped.

[Probable cause of trouble]
- Malfunction of diesel particulate filter regeneration control
- Malfunction of DPF temperature sensor 1
- Malfunction of engine electronic control unit
- Malfunction of common rail
- Malfunction of diesel particulate filter (front oxidation catalyst)

[Recoverability]
- Recovered if signal becomes normal when starter switch is turned OFF to ON (power supply resumed to electronic control unit).
  (Warning lamp is extinguished and diagnosis code is cleared simultaneously with recovery.)

[Electronic Control Unit Connection Diagram]

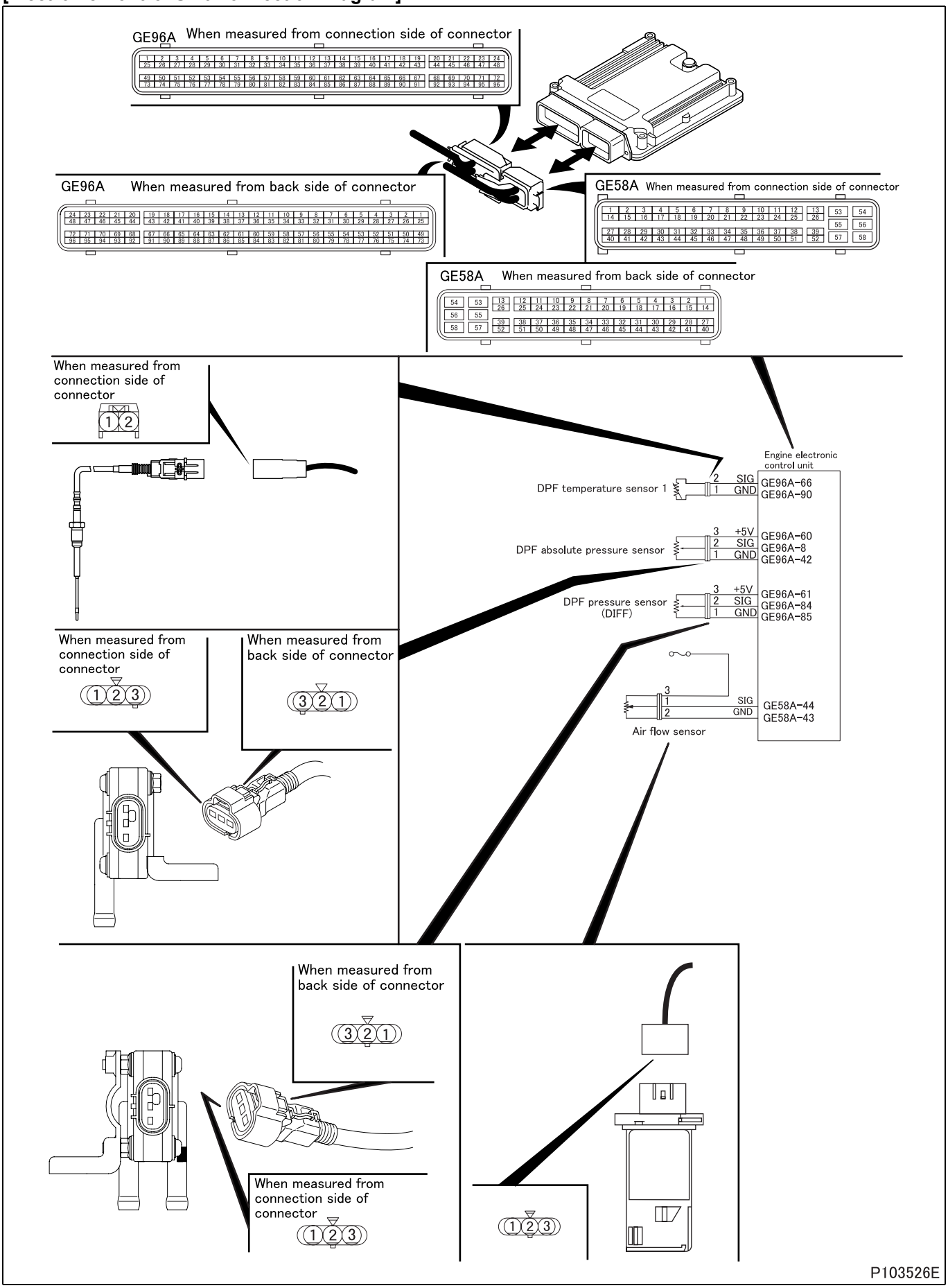

[Parts Identification and Location]

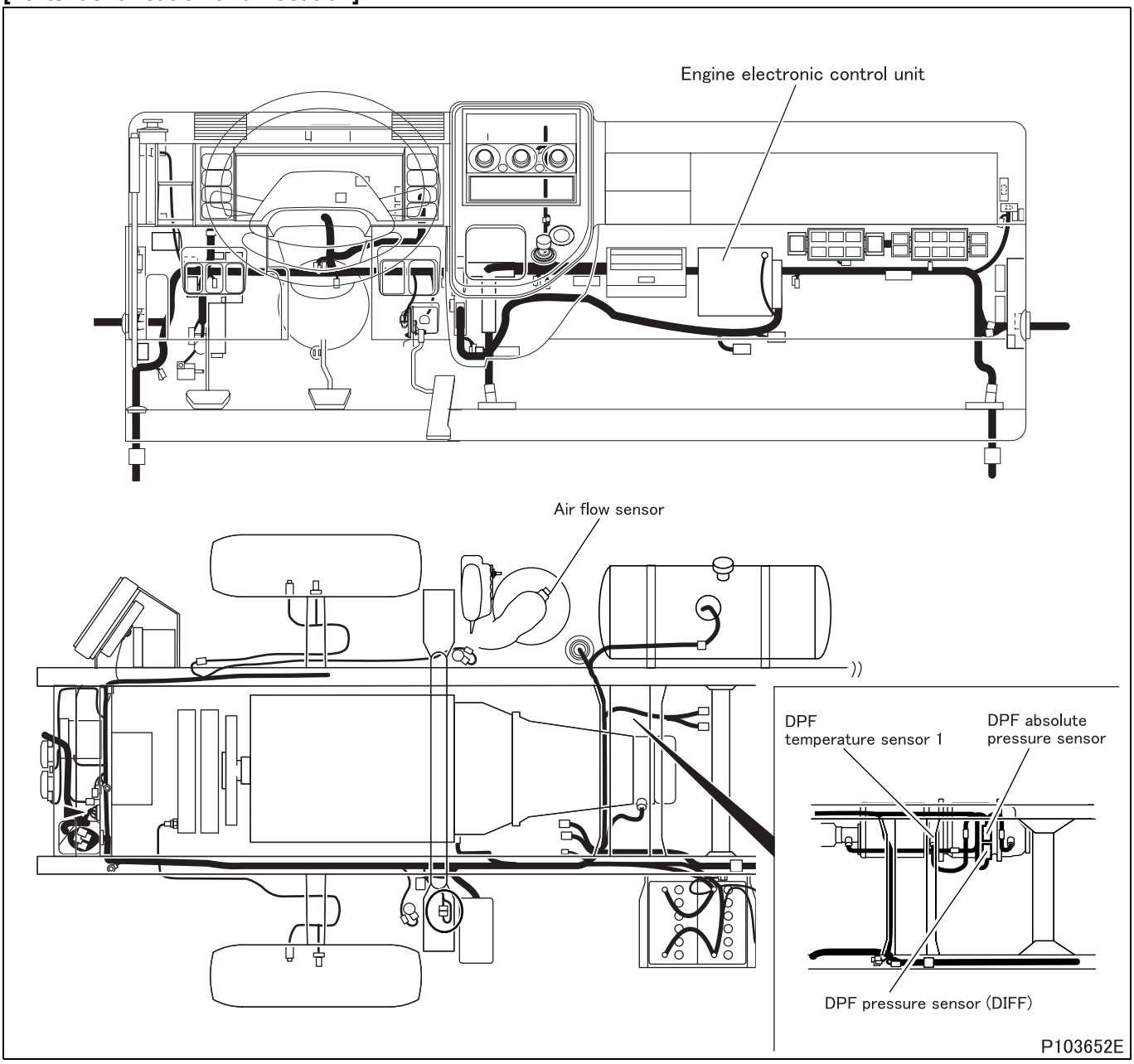

[Fault diagnosis]

- Perform checks in the sequence of the following steps.

Step 1	Inspection items		Inspection by control data
	Maintenance item		Check if following diagnosis codes occur simultaneously. • P0045 “VGT Actuator (Open)” • P0046 “VGT Actuator (Performance)” • P0047 “VGT Actuator (Low)” • P0102 “Airflow Sensor (Low)” • P0103 “Airflow Sensor (High)” • P0426 “EXH Gas Temp SNSR1 (Plausibility)” • P0427 “EXH Gas Temp SNSR1 (Low)” • P0428 “EXH Gas Temp SNSR1 (High)” • P0545 “DPF Temp SNSR (upstream) Low” • P0546 “DPF Temp SNSR (upstream) High” • P1430 “DPF Regeneration Switch” • P1660 “DPF Lamp Control Circuit (Low)” • P2031 “Exhaust Gas Temp” • P2032 “Exhaust Gas Temp (Low)” • P2033 “Exhaust Gas Temp (High)” • P2453 “DPF Diff SNSR (Plausi) & MFF” • P2454 “DPF Diff SNSR (Low) & MFF” • P2455 “DPF Diff SNSR (High) & MFF”
	Inspection condition		Ensure that each sensor mounting condition is free of abnormalities.
	Requirements		Codes occur.
	Inspection result (Is the judging standard satisfied?)	YES	Inspect diagnosis code that is occurring and go to step 2.
		NO	Go to step 2.

Step 2	Inspection items		Inspection of DPF temperature sensor 1 unit
	Maintenance item		Measure value of resistance between connector terminal No.1 and 2.
	Inspection condition		• Put DPF temperature sensor 1 in container filled with engine oil. • Heat the oil to each of the specified temperatures. Stir the oil well while doing so.
	Requirements		• 20°C {68°F} : 241.8 kΩ • 50°C {122°F} : 106.2 $^{+74.3}_{-41.8}$ kΩ • 100°C {212°F} : 33.56 $^{+17.60}_{-10.60}$ kΩ • 150°C {302°F} : 13.90 $^{+5.36}_{-3.60}$ kΩ • 200°C {392°F} : 6.896 $^{+2.064}_{-1.252}$ kΩ
	Inspection result (Is the judging standard satisfied?)	YES	Go to step 3.
		NO	Cleaning of sensor

<Step 2 inspection diagram>

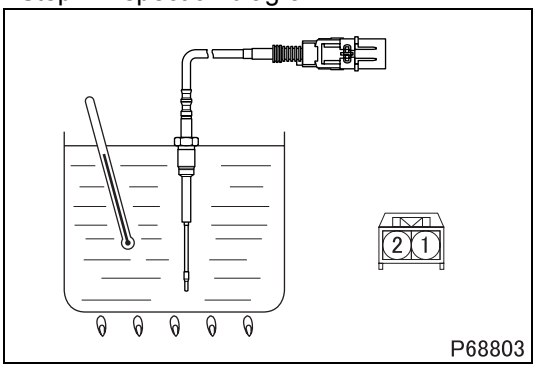

Step 3	Inspection items		Inspection of oil level
	Maintenance item		Inspection of engine oil level
	Inspection condition		Engine stopped
	Requirements		Oil level for inspection is not exceeded.
	Inspection result (Is the judging standard satisfied?)	YES	Go to step 4.
		NO	After replacement of oil, go to step 4

<Step 3 inspection diagram>

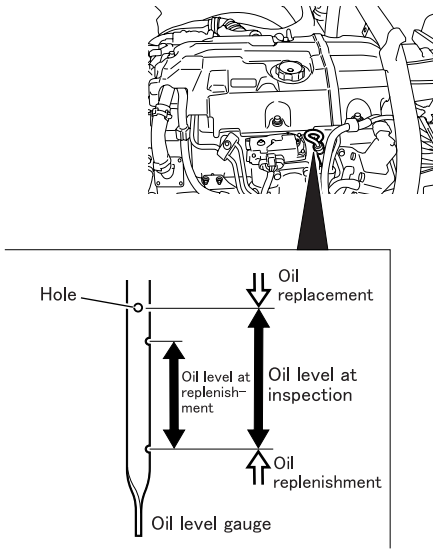

P103677E

Step 4	Inspection items		Inspection of pressure hose
	Maintenance item		Check pressure hose of DPF absolute pressure sensor and DPF pressure sensor (DIFF) for connection and cracks.
	Inspection condition		–
	Requirements		Nothing abnormal detected
	Inspection result (Is the judging standard satisfied?)	YES	Go to step 5.
		NO	After correction and replacement of hose, go to step 5.

Step 5	Inspection items		Unit inspection of diesel particulate filter
	Maintenance item		Check the exhaust passage inside the diesel particulate filter for adhesion of soot in large quantity.
	Inspection condition		Remove diesel particulate filter.
	Requirements		No soot is deposited.
	Inspection result (Is the judging standard satisfied?)	YES	Go to step 6.
		NO	After replacement of ceramic filter, perform resetting the DPF-related information.

<Step 5 inspection diagram>

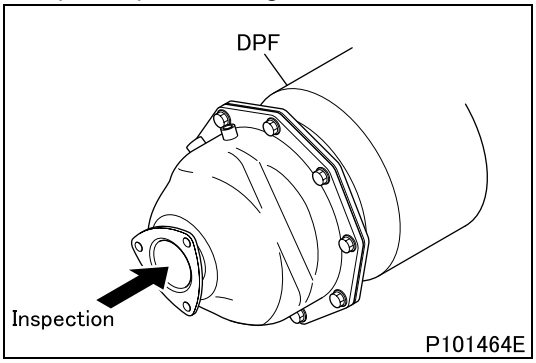

Step 6	Inspection items		Diesel Particulate Filter Unit Inspection for Clogging and Cleaning the Diesel Particulate Filter Unit
	Maintenance item		See Gr15 “Diesel Particulate Filter Unit Inspection for Clogging and Cleaning the Diesel Particulate Filter Unit”
	Inspection condition		Perform the following preparatory works. • Place the transmission in neutral (place the automatic transmission in P range). • Turn the steering wheel in neutral position and securely apply the parking brake. • Turn off air conditioner not to increase the engine speed. • Check diagnosis code of each electronic control system. If any fault exists, rectify it. • Resetting the DPF-related information (perform “History reset” of Multi-Use Tester) (See Gr15 “Resetting the DPF-related Information”.) • Warm up the engine until the engine coolant has been heated to more than 70°C {158°F} (verify from Service Data “Engine Coolant Temperature” or “31: Water Temperature”).
	Requirements		This diagnosis code does not occur again.
	Inspection result (Is the judging standard satisfied?)	YES	Go to step 7.
		NO	Replacement of electronic control unit

Step 7	Inspection items		Inspection of sensor unit
	Maintenance item		Measure value of voltage between connector terminal No. 2 (+) and 1 (–).
	Inspection condition		• Apply voltage DC 5 V across terminals No. 3 (+) and 1 (–). • Gradually increase applied air pressure.
	Requirements		• 0 ± 3.5 kPa {0 ± 0.5 psi, 0 ± 0.04 kgf/cm^2}: 1 V • 100 ± 3.5 kPa {15 ± 0.5 psi, 1.02 ± 0.04 kgf/cm^2}: 4.5 V
	Inspection result (Is the judging standard satisfied?)	YES	Go to step 8.
		NO	Replacement of sensor

<Step 7 inspection diagram>

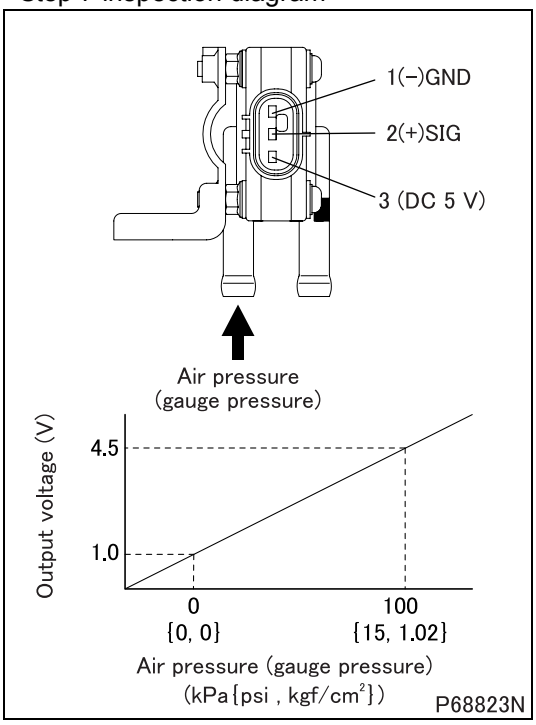

Step 8	Inspection items		Inspection of sensor unit
	Maintenance item		Since inspection of single part is not easy, whether characteristics are deteriorated or not must be checked for the sensor mounted on the current vehicle by measuring and comparing the amount of sensor intake air of the sensor currently mounted on vehicle and that replaced with new one by the service data. **(1) Prepare for inspection** • Clean or replace air cleaner element. • Prepare a new air flow sensor. • Warm up the engine fully. **(2) Measure the intake air of current sensor** • Keep pressing the accelerator pedal until it bottom the stopper bolt from the idling state. (no load maximum rotation) • Measure the following items from among “Service data”. **<General Scanning Tool used>** • Engine speed: “Ne” (rpm) • Intake air flow rate: “Air Flow Rate from MAFS” (g/s) **<Multi-Use Tester used>** • Engine speed: 01 “Engine Revolution” (rpm) • Intake air flow rate: 60 “Air mass flow” (g/s) **(3) Measure the intake air of new sensor** • Replace the currently mounted sensor with a new sensor. • Keep pressing the accelerator pedal until it bottom the stopper bolt from the idling state. (no load maximum rotation) • Measure intake air flow at the same rpm as that of engine revolution in item (2) of “Service data”. **(4) Comparison whether characteristics are deteriorated** • Calculate the characteristics deterioration factor (%) by the following equation. • Characteristics deterioration factor (%) = (intake air of new item – current intake air) × 100/intake air of new item.
	Inspection condition		–
	Requirements		10% or less
	Inspection result (Is the judging standard satisfied?)	YES	Go to step 9.
		NO	Replacement of sensor

Step 9	Inspection items		Inspection by control data
	Maintenance item		Perform actuator test item No. B2 “Fuel Leak Check”.
	Inspection condition		Engine start: At idle
	Requirements		There is no leak from injectors (four).
	Inspection result (Is the judging standard satisfied?)	YES	Replacement of diesel particulate filter
		NO	Replacement of injector

[Fault code]
Diagnosis code: P1417/Flash code: 92
[Monitor]
Temperature increase is insufficient for manual diesel particulate filter regeneration control
[Fault (outline)]
Plausibility
[Diagnosis check]
- Temperature in diesel particulate filter during manual diesel particular filter regeneration is monitored through DPF temperature sensor 1.

[Code generation condition]
- If temperature remains below 500°C {932°F} for 30 minutes after start of manual diesel particulate filter regeneration.

[Diagnosis check timing]
- Fault diagnosis is performed only once during the driving cycle.

[Diagnostic requirement]
–

[Control effected by electronic control unit during fault]
- Diesel particulate filter regeneration is stopped.

[Probable cause of trouble]
- Malfunction of diesel particulate filter regeneration control
- Malfunction of DPF temperature sensor 1
- Malfunction of engine electronic control unit
- Malfunction of common rail
- Malfunction of diesel particulate filter (front oxidation catalyst)

[Recoverability]
- Recovered if signal becomes normal when starter switch is turned OFF to ON (power supply resumed to electronic control unit).
  (Warning lamp is extinguished and diagnosis code is cleared simultaneously with recovery.)

[Electronic Control Unit Connection Diagram]

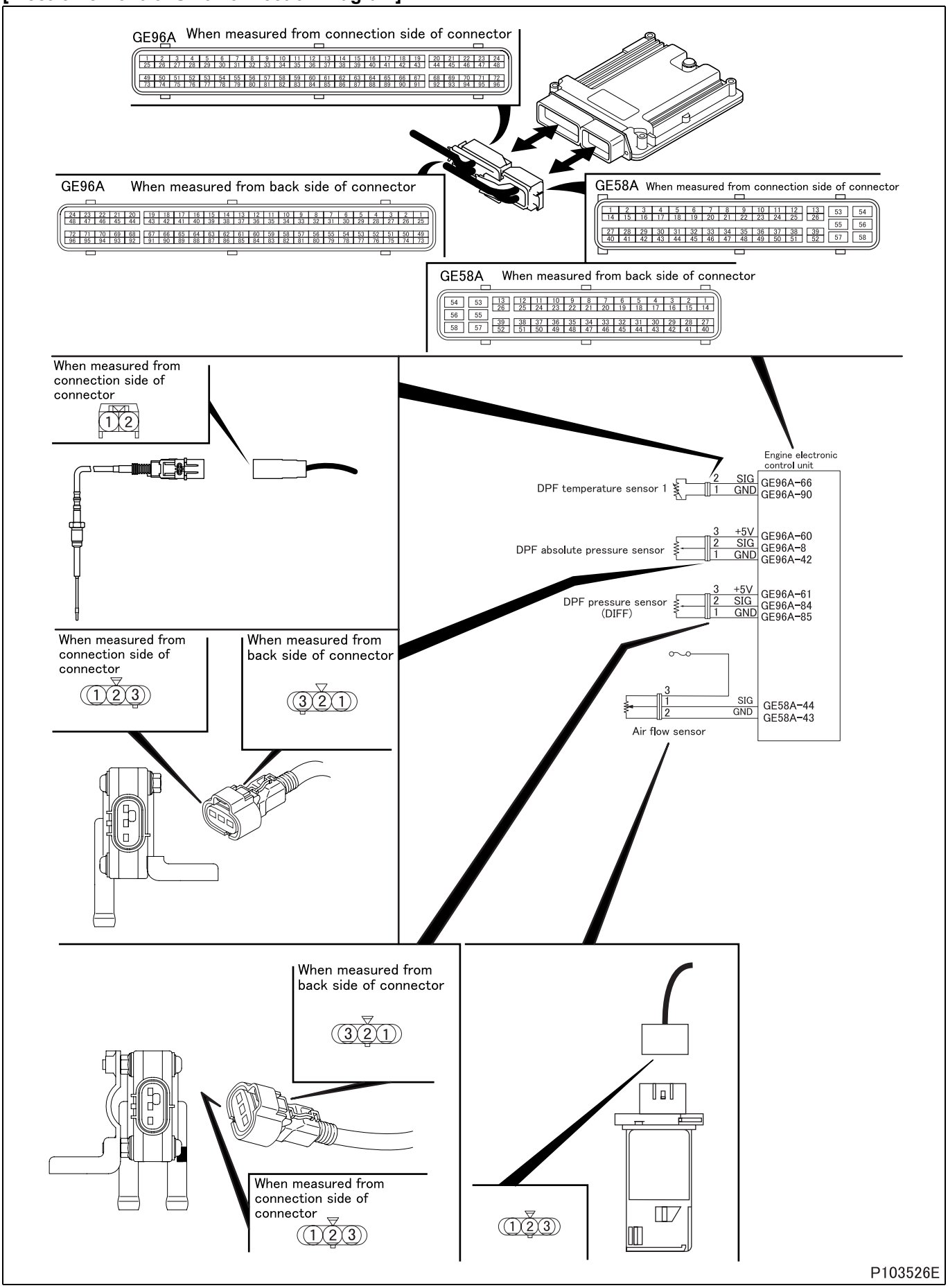

[Parts Identification and Location]

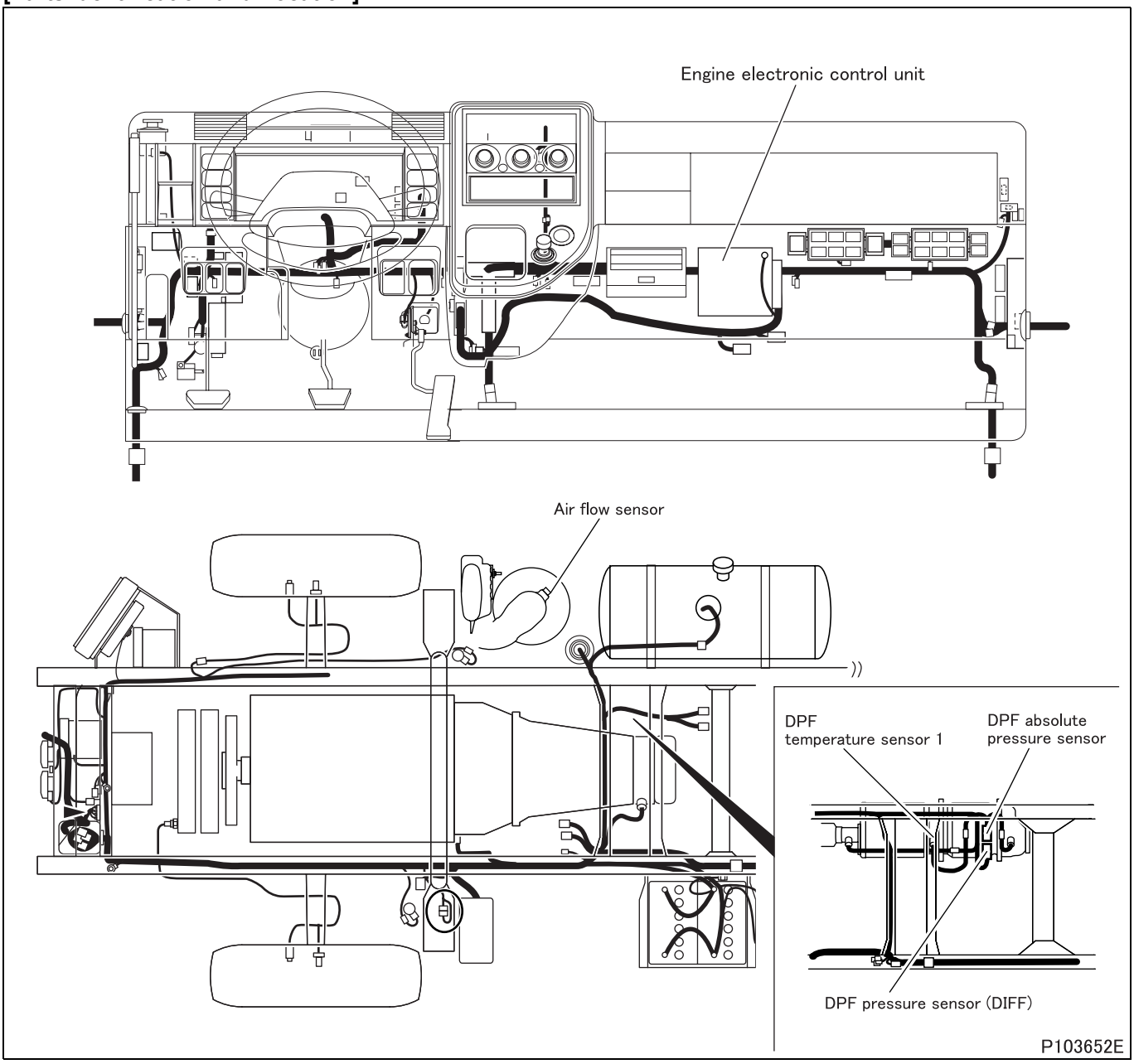

[Fault diagnosis]

- Perform checks in the sequence of the following steps.

Step 1	Inspection items		Inspection by control data
	Maintenance item		Check if following diagnosis codes occur simultaneously. • P0045 “VGT Actuator (Open)” • P0046 “VGT Actuator (Performance)” • P0047 “VGT Actuator (Low)” • P0102 “Airflow Sensor (Low)” • P0103 “Airflow Sensor (High)” • P0426 “EXH Gas Temp SNSR1 (Plausibility)” • P0427 “EXH Gas Temp SNSR1 (Low)” • P0428 “EXH Gas Temp SNSR1 (High)” • P0545 “DPF Temp SNSR (upstream) Low” • P0546 “DPF Temp SNSR (upstream) High” • P1430 “DPF Regeneration Switch” • P1660 “DPF Lamp Control Circuit (Low)” • P2031 “Exhaust Gas Temp” • P2032 “Exhaust Gas Temp (Low)” • P2033 “Exhaust Gas Temp (High)” • P2453 “DPF Diff SNSR (Plausi) & MFF” • P2454 “DPF Diff SNSR (Low) & MFF” • P2455 “DPF Diff SNSR (High) & MFF”
	Inspection condition		Ensure that each sensor mounting condition is free of abnormalities.
	Requirements		Codes occur.
	Inspection result (Is the judging standard satisfied?)	YES	Inspect diagnosis code that is occurring and go to step 2.
		NO	Go to step 2.

Step 2	Inspection items		Inspection of DPF temperature sensor 1 unit
	Maintenance item		Measure value of resistance between connector terminal No. 1 and 2.
	Inspection condition		• Put DPF temperature sensor 1 in container filled with engine oil. • Heat the oil to each of the specified temperatures. Stir the oil well while doing so.
	Requirements		• 20°C {68°F} : 241.8 kΩ • 50°C {122°F} : 106.2 $^{+74.3}_{-41.8}$ kΩ • 100°C {212°F} : 33.56 $^{+17.60}_{-10.60}$ kΩ • 150°C {302°F} : 13.90 $^{+5.36}_{-3.60}$ kΩ • 200°C {392°F} : 6.896 $^{+2.064}_{-1.252}$ kΩ
	Inspection result (Is the judging standard satisfied?)	YES	Go to step 3.
		NO	Cleaning of sensor

<Step 2 inspection diagram>

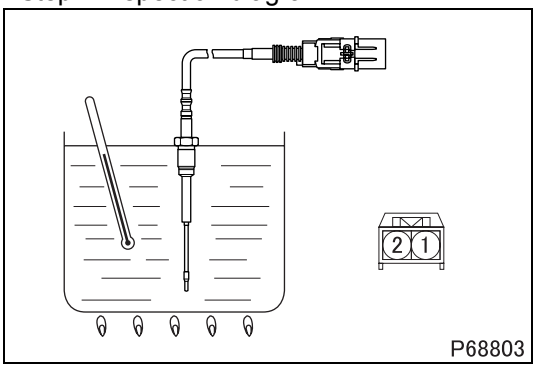

Step 3	Inspection items		Inspection of oil level
	Maintenance item		Inspection of engine oil level
	Inspection condition		Engine stopped
	Requirements		Oil level for inspection is not exceeded.
	Inspection result (Is the judging standard satisfied?)	YES	Go to step 4.
		NO	After replacement of oil, go to step 4

<Step 3 inspection diagram>

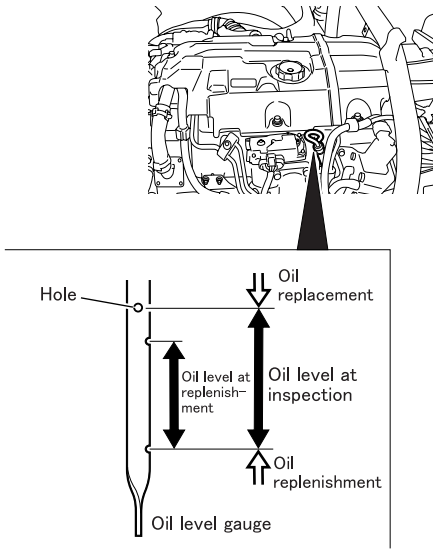

P103677E

Step 4	Inspection items		Inspection of pressure hose
	Maintenance item		Check pressure hose of DPF absolute pressure sensor and DPF pressure sensor (DIFF) for connection and cracks.
	Inspection condition		–
	Requirements		Nothing abnormal detected
	Inspection result (Is the judging standard satisfied?)	YES	Go to step 5.
		NO	After correction and replacement of hose, go to step 5.

Step 5	Inspection items		Unit inspection of diesel particulate filter
	Maintenance item		Check the exhaust passage inside the diesel particulate filter for adhesion of soot in large quantity.
	Inspection condition		Remove diesel particulate filter.
	Requirements		No soot is deposited.
	Inspection result (Is the judging standard satisfied?)	YES	Go to step 6.
		NO	After replacement of ceramic filter, perform resetting the DPF-related information.

<Step 5 inspection diagram>

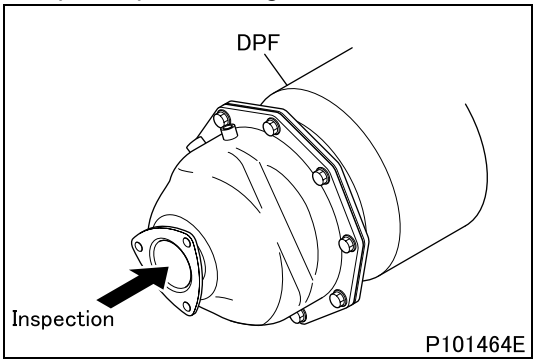

Step 6	Inspection items		Diesel Particulate Filter Unit Inspection for Clogging and Cleaning the Diesel Particulate Filter Unit
	Maintenance item		See Gr15 “Diesel Particulate Filter Unit Inspection for Clogging and Cleaning the Diesel Particulate Filter Unit”
	Inspection condition		Perform the following preparatory works. • Place the transmission in neutral (place the automatic transmission in P range). • Turn the steering wheel in neutral position and securely apply the parking brake. • Turn off air conditioner not to increase the engine speed. • Check diagnosis code of each electronic control system. If any fault exists, rectify it. • Resetting the DPF-related information (perform “History reset” of Multi-Use Tester) (See Gr15 “Resetting the DPF-related Information”.) • Warm up the engine until the engine coolant has been heated to more than 70°C {158°F} (verify from Service Data “Engine Coolant Temperature” or “31: Water Temperature”).
	Requirements		This diagnosis code does not occur again.
	Inspection result (Is the judging standard satisfied?)	YES	Go to step 7.
		NO	Replacement of electronic control unit

Step 7	Inspection items		Inspection of sensor unit
	Maintenance item		Measure value of voltage between connector terminal No. 2 (+) and 1 (–).
	Inspection condition		• Apply voltage DC 5 V across terminals No. 3 (+) and 1 (–). • Gradually increase applied air pressure.
	Requirements		• 0 ± 3.5 kPa {0 ± 0.5 psi, 0 ± 0.04 kgf/cm^2}: 1 V • 100 ± 3.5 kPa {15 ± 0.5 psi, 1.02 ± 0.04 kgf/cm^2}: 4.5 V
	Inspection result (Is the judging standard satisfied?)	YES	Go to step 8.
		NO	Replacement of sensor

<Step 7 inspection diagram>

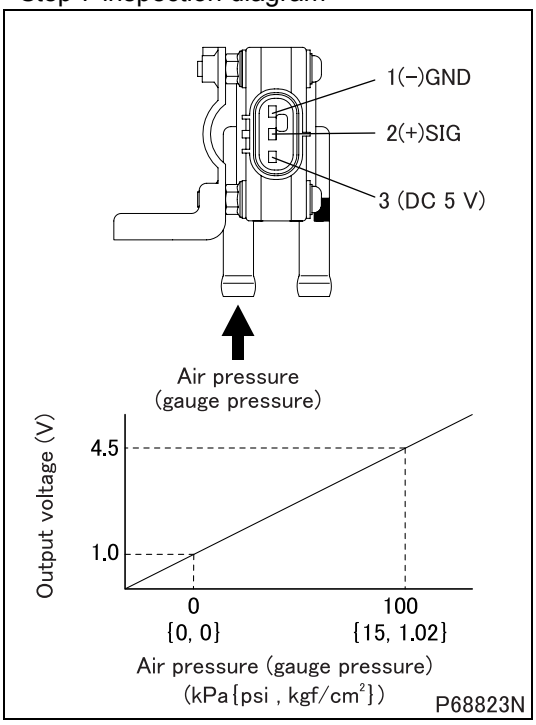

Step 8	Inspection items		Inspection of sensor unit
	Maintenance item		Since inspection of single part is not easy, whether characteristics are deteriorated or not must be checked for the sensor mounted on the current vehicle by measuring and comparing the amount of sensor intake air of the sensor currently mounted on vehicle and that replaced with new one by the service data. **(1) Prepare for inspection** • Clean or replace air cleaner element. • Prepare a new air flow sensor. • Warm up the engine fully. **(2) Measure the intake air of current sensor** • Keep pressing the accelerator pedal until it bottom the stopper bolt from the idling state. (no load maximum rotation) • Measure the following items from among “Service data”. **<General Scanning Tool used>** • Engine speed: “Ne” (rpm) • Intake air flow rate: “Air Flow Rate from MAFS” (g/s) **<Multi-Use Tester used>** • Engine speed: 01 “Engine Revolution” (rpm) • Intake air flow rate: 60 “Air mass flow” (g/s) **(3) Measure the intake air of new sensor** • Replace the currently mounted sensor with a new sensor. • Keep pressing the accelerator pedal until it bottom the stopper bolt from the idling state. (no load maximum rotation) • Measure intake air flow at the same rpm as that of engine revolution in item (2) of “Service data”. **(4) Comparison whether characteristics are deteriorated** • Calculate the characteristics deterioration factor (%) by the following equation. • Characteristics deterioration factor (%) = (intake air of new item – current intake air) × 100/intake air of new item.
	Inspection condition		–
	Requirements		10% or less
	Inspection result (Is the judging standard satisfied?)	YES	Go to step 9.
		NO	Replacement of sensor

Step 9	Inspection items		Inspection by control data
	Maintenance item		Perform actuator test item No. B2 “Fuel Leak Check”.
	Inspection condition		Engine start: At idle
	Requirements		There is no leak from injectors (four).
	Inspection result (Is the judging standard satisfied?)	YES	Replacement of diesel particulate filter
		NO	Replacement of injector

[Fault code]
Diagnosis code: P1418/Flash code: 92
[Monitor]
Temperature increase is insufficient for manual diesel particulate filter regeneration control
[Fault (outline)]
Plausibility
[Diagnosis check]
- Temperature in diesel particulate filter during manual diesel particular filter regeneration is monitored through DPF temperature sensor 1.

[Code generation condition]
- If temperature remains over 620°C {1148°F} for 10 minutes after start of manual diesel particulate filter regeneration.

[Diagnosis check timing]
- Fault diagnosis is performed only once during the driving cycle.

[Diagnostic requirement]
–

[Control effected by electronic control unit during fault]
- Diesel particulate filter regeneration is stopped.

[Probable cause of trouble]
- Malfunction of diesel particulate filter regeneration control
- Malfunction of DPF temperature sensor 1
- Malfunction of engine electronic control unit
- Malfunction of common rail
- Malfunction of diesel particulate filter (front oxidation catalyst)

[Recoverability]
- Recovered if signal becomes normal when starter switch is turned OFF to ON (power supply resumed to electronic control unit).
  (Warning lamp is extinguished and diagnosis code is cleared simultaneously with recovery.)

[Electronic Control Unit Connection Diagram]

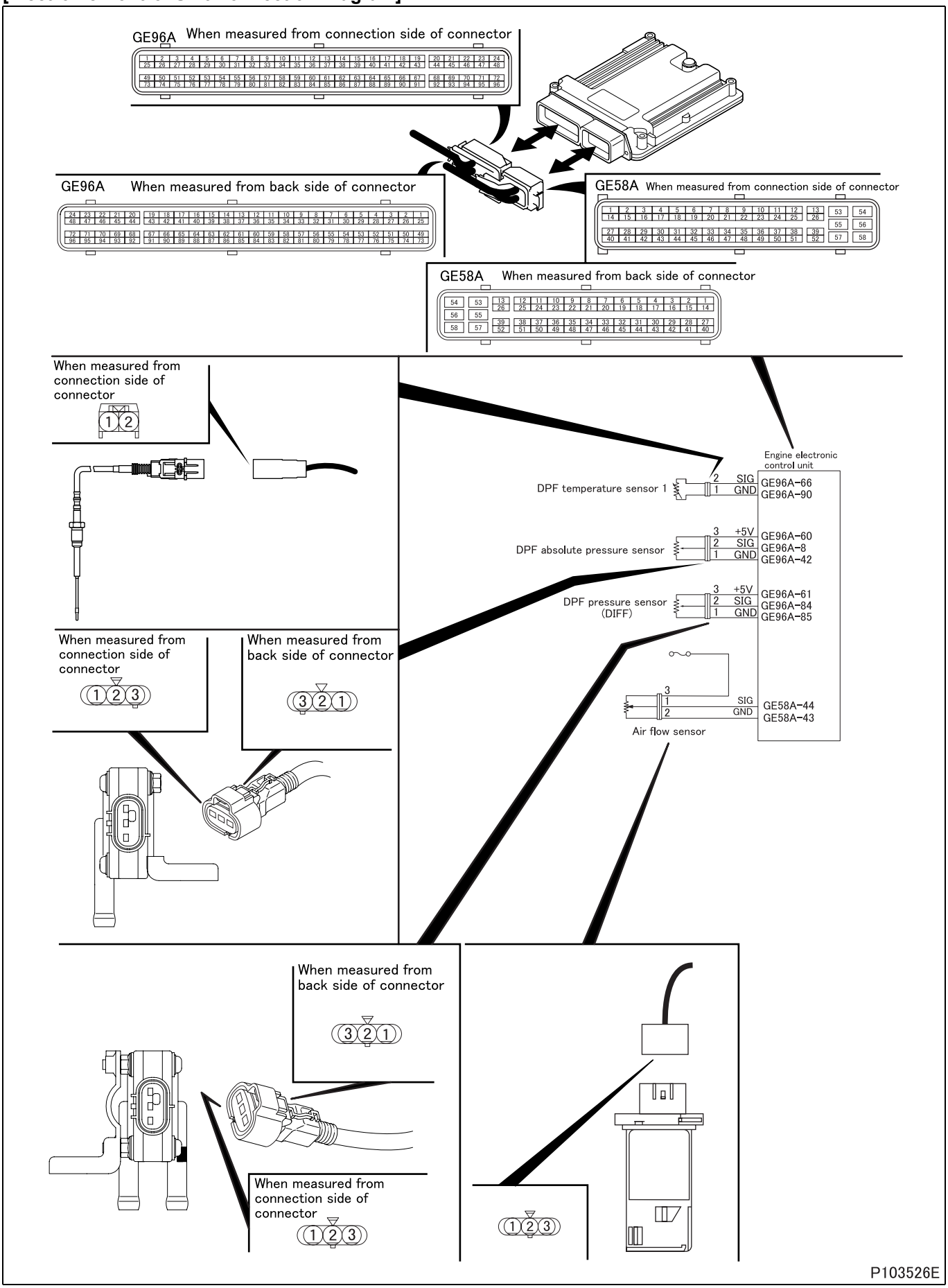

[Parts Identification and Location]

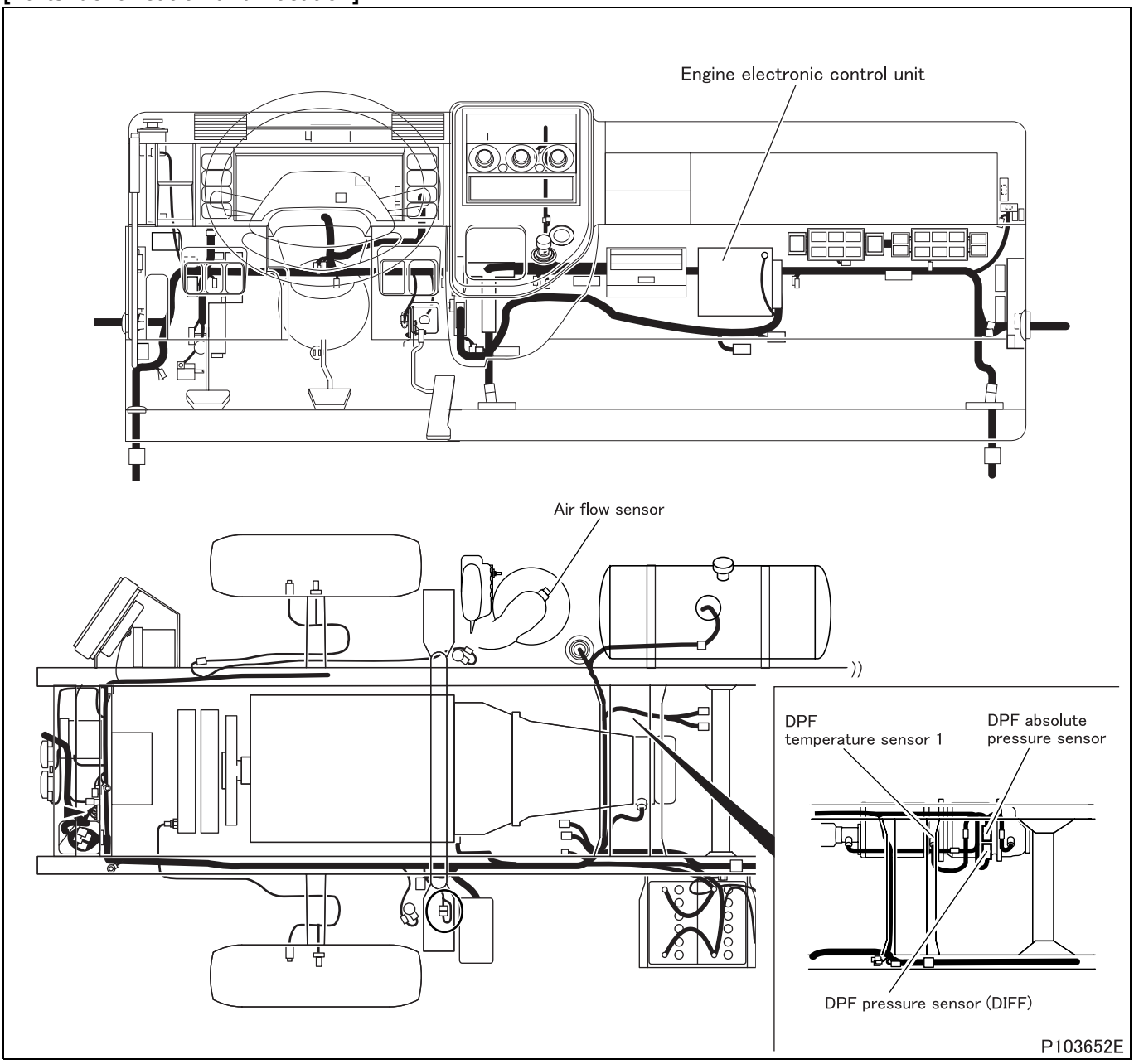

[Fault diagnosis]

- Perform checks in the sequence of the following steps.

Step 1	Inspection items		Inspection by control data
	Maintenance item		Check if following diagnosis codes occur simultaneously. • P0045 “VGT Actuator (Open)” • P0046 “VGT Actuator (Performance)” • P0047 “VGT Actuator (Low)” • P0102 “Airflow Sensor (Low)” • P0103 “Airflow Sensor (High)” • P0426 “EXH Gas Temp SNSR1 (Plausibility)” • P0427 “EXH Gas Temp SNSR1 (Low)” • P0428 “EXH Gas Temp SNSR1 (High)” • P0545 “DPF Temp SNSR (upstream) Low” • P0546 “DPF Temp SNSR (upstream) High” • P1430 “DPF Regeneration Switch” • P1660 “DPF Lamp Control Circuit (Low)” • P2031 “Exhaust Gas Temp” • P2032 “Exhaust Gas Temp (Low)” • P2033 “Exhaust Gas Temp (High)” • P2453 “DPF Diff SNSR (Plausi) & MFF” • P2454 “DPF Diff SNSR (Low) & MFF” • P2455 “DPF Diff SNSR (High) & MFF”
	Inspection condition		Ensure that each sensor mounting condition is free of abnormalities.
	Requirements		Codes occur.
	Inspection result (Is the judging standard satisfied?)	YES	Inspect diagnosis code that is occurring and go to step 2.
		NO	Go to step 2.

Step 2	Inspection items		Inspection of DPF temperature sensor 1 unit
	Maintenance item		Measure value of resistance between connector terminal No. 1 and 2.
	Inspection condition		• Put DPF temperature sensor 1 in container filled with engine oil. • Heat the oil to each of the specified temperatures. Stir the oil well while doing so.
	Requirements		• 20°C {68°F} : 241.8 kΩ • 50°C {122°F} : 106.2 $^{+74.3}_{-41.8}$ kΩ • 100°C {212°F} : 33.56 $^{+17.60}_{-10.60}$ kΩ • 150°C {302°F} : 13.90 $^{+5.36}_{-3.60}$ kΩ • 200°C {392°F} : 6.896 $^{+2.064}_{-1.252}$ kΩ
	Inspection result (Is the judging standard satisfied?)	YES	Go to step 3.
		NO	Cleaning of sensor

<Step 2 inspection diagram>

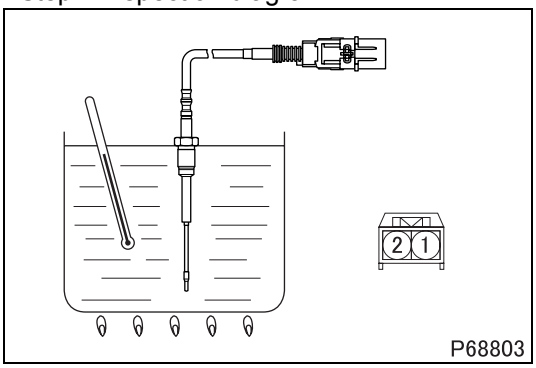

Step 3	Inspection items		Inspection of oil level
	Maintenance item		Inspection of engine oil level
	Inspection condition		Engine stopped
	Requirements		Oil level for inspection is not exceeded.
	Inspection result (Is the judging standard satisfied?)	YES	Go to step 4.
		NO	After replacement of oil, go to step 4

<Step 3 inspection diagram>

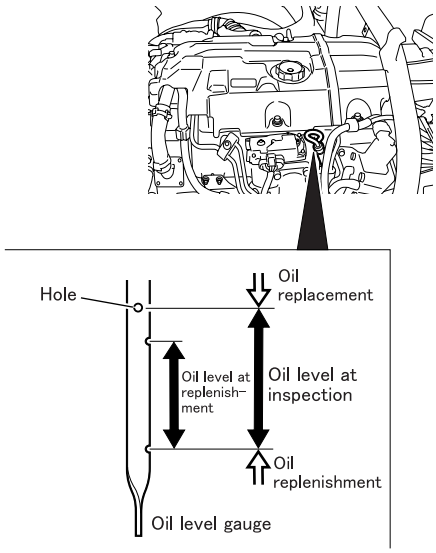

P103677E

Step 4	Inspection items		Inspection of pressure hose
	Maintenance item		Check pressure hose of DPF absolute pressure sensor and DPF pressure sensor (DIFF) for connection and cracks.
	Inspection condition		–
	Requirements		Nothing abnormal detected
	Inspection result (Is the judging standard satisfied?)	YES	Go to step 5.
		NO	After correction and replacement of hose, go to step 5.

Step 5	Inspection items		Unit inspection of diesel particulate filter
	Maintenance item		Check the exhaust passage inside the diesel particulate filter for adhesion of soot in large quantity.
	Inspection condition		Remove diesel particulate filter.
	Requirements		No soot is deposited.
	Inspection result (Is the judging standard satisfied?)	YES	Go to step 6.
		NO	After replacement of ceramic filter, perform resetting the DPF-related information.

<Step 5 inspection diagram>

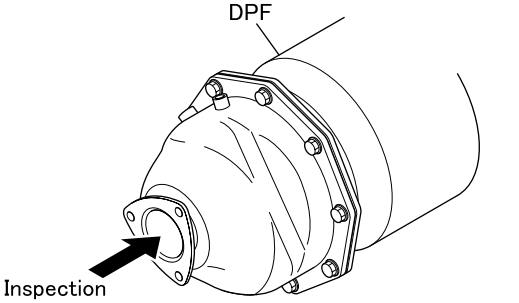

Step 6	Inspection items		Diesel Particulate Filter Unit Inspection for Clogging and Cleaning the Diesel Particulate Filter Unit
	Maintenance item		See Gr15 “Diesel Particulate Filter Unit Inspection for Clogging and Cleaning the Diesel Particulate Filter Unit”
	Inspection condition		Perform the following preparatory works. • Place the transmission in neutral (place the automatic transmission in P range). • Turn the steering wheel in neutral position and securely apply the parking brake. • Turn off air conditioner not to increase the engine speed. • Check diagnosis code of each electronic control system. If any fault exists, rectify it. • Resetting the DPF-related information (perform “History reset” of Multi-Use Tester) (See Gr15 “Resetting the DPF-related Information”.) • Warm up the engine until the engine coolant has been heated to more than 70°C {158°F} (verify from Service Data “Engine Coolant Temperature” or “31: Water Temperature”).
	Requirements		This diagnosis code does not occur again.
	Inspection result (Is the judging standard satisfied?)	YES	Go to step 7.
		NO	Replacement of electronic control unit

Step 7	Inspection items		Inspection of sensor unit
	Maintenance item		Measure value of voltage between connector terminal No. 2 (+) and 1 (–).
	Inspection condition		• Apply voltage DC 5 V across terminals No. 3 (+) and 1 (–). • Gradually increase applied air pressure.
	Requirements		• 0 ± 3.5 kPa {0 ± 0.5 psi, 0 ± 0.04 kgf/cm^2}: 1 V • 100 ± 3.5 kPa {15 ± 0.5 psi, 1.02 ± 0.04 kgf/cm^2}: 4.5 V
	Inspection result (Is the judging standard satisfied?)	YES	Go to step 8.
		NO	Replacement of sensor

<Step 7 inspection diagram>

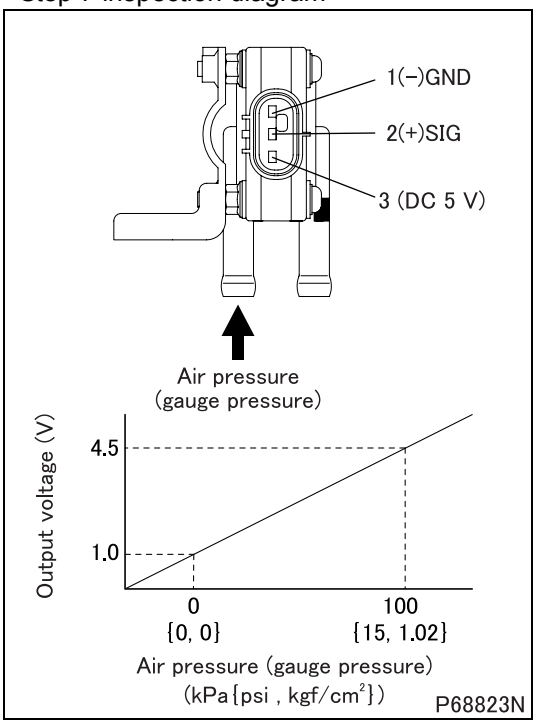

Step 8	Inspection items		Inspection of sensor unit
	Maintenance item		Since inspection of single part is not easy, whether characteristics are deteriorated or not must be checked for the sensor mounted on the current vehicle by measuring and comparing the amount of sensor intake air of the sensor currently mounted on vehicle and that replaced with new one by the service data. **(1) Prepare for inspection** • Clean or replace air cleaner element. • Prepare a new air flow sensor. • Warm up the engine fully. **(2) Measure the intake air of current sensor** • Keep pressing the accelerator pedal until it bottom the stopper bolt from the idling state. (no load maximum rotation) • Measure the following items from among “Service data”. **<General Scanning Tool used>** • Engine speed: “Ne” (rpm) • Intake air flow rate: “Air Flow Rate from MAFS” (g/s) **<Multi-Use Tester used>** • Engine speed: 01 “Engine Revolution” (rpm) • Intake air flow rate: 60 “Air mass flow” (g/s) **(3) Measure the intake air of new sensor** • Replace the currently mounted sensor with a new sensor. • Keep pressing the accelerator pedal until it bottom the stopper bolt from the idling state. (no load maximum rotation) • Measure intake air flow at the same rpm as that of engine revolution in item (2) of “Service data”. **(4) Comparison whether characteristics are deteriorated** • Calculate the characteristics deterioration factor (%) by the following equation. • Characteristics deterioration factor (%) = (intake air of new item – current intake air) × 100/intake air of new item.
	Inspection condition		–
	Requirements		10% or less
	Inspection result (Is the judging standard satisfied?)	YES	Go to step 9.
		NO	Replacement of sensor

Step 9	Inspection items		Inspection by control data
	Maintenance item		Perform actuator test item No. B2 “Fuel Leak Check”.
	Inspection condition		Engine start: At idle
	Requirements		There is no leak from injectors (four).
	Inspection result (Is the judging standard satisfied?)	YES	Replacement of diesel particulate filter
		NO	Replacement of injector

[Fault code]
Diagnosis code: P1419/Flash code: 92
[Monitor]
Failure of manual diesel particulate filter regeneration control
[Fault (outline)]
Plausibility
[Diagnosis check]
- Duration of manual diesel particulate filter regeneration is monitored.

[Code generation condition]
- Regeneration exceeds specified time. (Warning lamp is lit and diagnosis code is displayed on first establishment of code generation condition.)

[Diagnosis check timing]
- Fault diagnosis is performed only once during the driving cycle.

[Diagnostic requirement]
–

[Control effected by electronic control unit during fault]
- Diesel particulate filter regeneration is stopped.

[Probable cause of trouble]
- Malfunction of diesel particulate filter regeneration control
- Malfunction of DPF temperature sensor 1
- Malfunction of engine electronic control unit
- Malfunction of common rail
- Malfunction of diesel particulate filter (front oxidation catalyst)

[Recoverability]
- Recovered if signal becomes normal when starter switch is turned OFF to ON (power supply resumed to electronic control unit).
  (Warning lamp is extinguished and diagnosis code is cleared simultaneously with recovery.)

[Electronic Control Unit Connection Diagram]

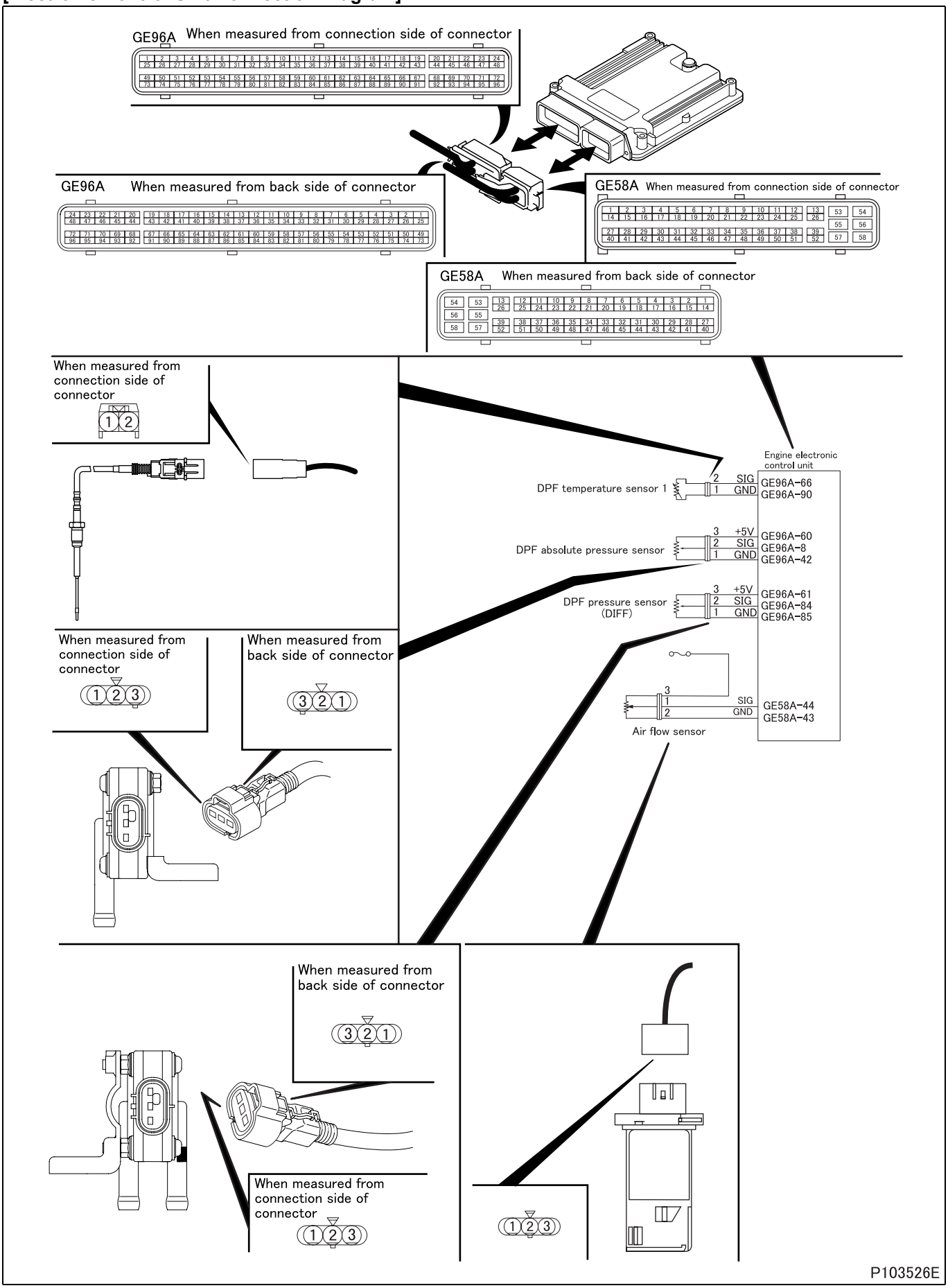

[Parts Identification and Location]

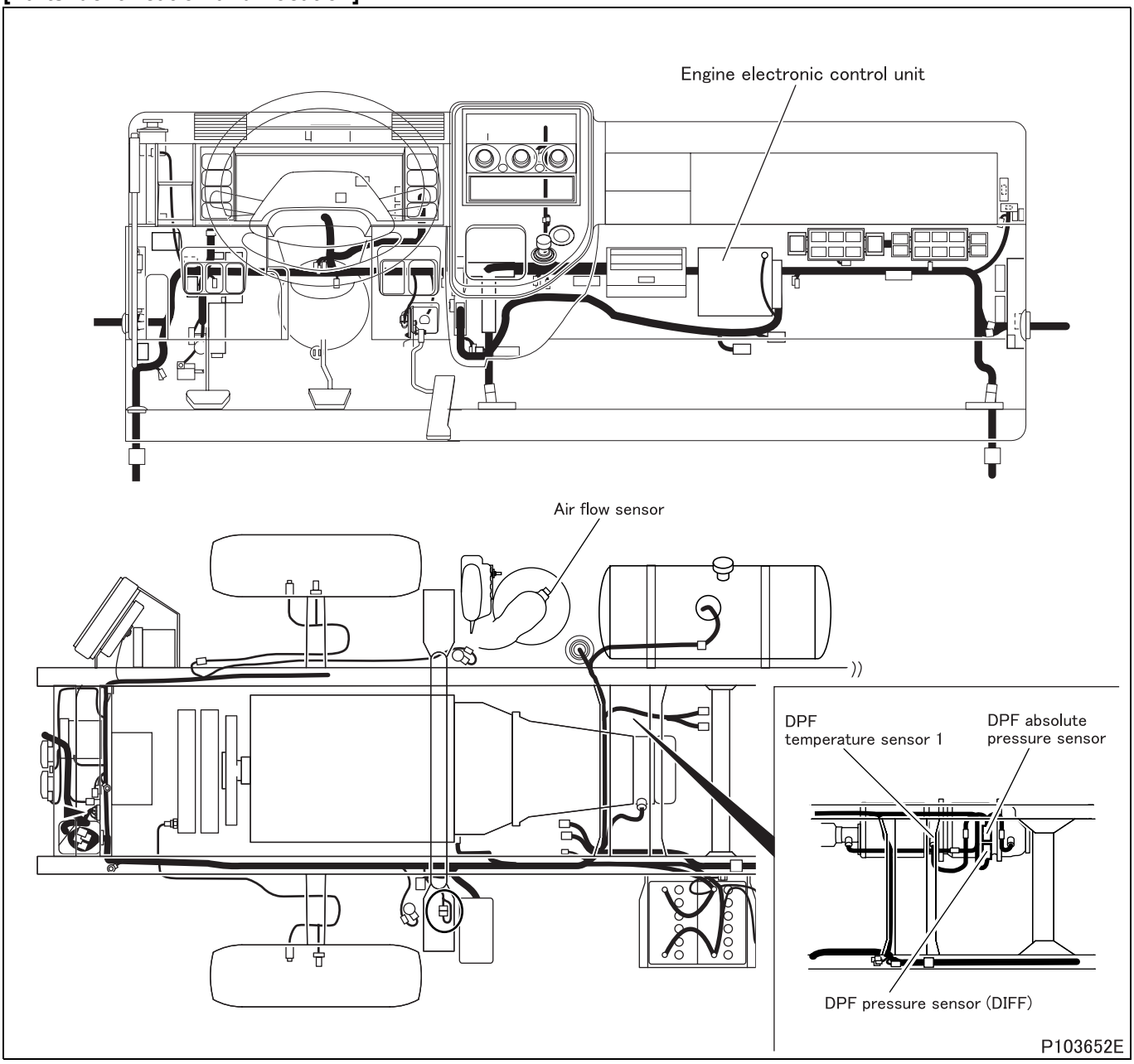

[Fault diagnosis]

- Perform checks in the sequence of the following steps.

Step 1	Inspection items		Inspection by control data
	Maintenance item		Check if following diagnosis codes occur simultaneously. • P0045 “VGT Actuator (Open)” • P0046 “VGT Actuator (Performance)” • P0047 “VGT Actuator (Low)” • P0102 “Airflow Sensor (Low)” • P0103 “Airflow Sensor (High)” • P0426 “EXH Gas Temp SNSR1 (Plausibility)” • P0427 “EXH Gas Temp SNSR1 (Low)” • P0428 “EXH Gas Temp SNSR1 (High)” • P0545 “DPF Temp SNSR (upstream) Low” • P0546 “DPF Temp SNSR (upstream) High” • P1430 “DPF Regeneration Switch” • P1660 “DPF Lamp Control Circuit (Low)” • P2031 “Exhaust Gas Temp” • P2032 “Exhaust Gas Temp (Low)” • P2033 “Exhaust Gas Temp (High)” • P2453 “DPF Diff SNSR (Plausi) & MFF” • P2454 “DPF Diff SNSR (Low) & MFF” • P2455 “DPF Diff SNSR (High) & MFF”
	Inspection condition		Ensure that each sensor mounting condition is free of abnormalities.
	Requirements		Codes occur.
	Inspection result (Is the judging standard satisfied?)	YES	Inspect diagnosis code that is occurring and go to step 2.
		NO	Go to step 2.

Step 2	Inspection items		Inspection of DPF temperature sensor 1 unit
	Maintenance item		Measure value of resistance between connector terminal No. 1 and 2.
	Inspection condition		• Put DPF temperature sensor 1 in container filled with engine oil. • Heat the oil to each of the specified temperatures. Stir the oil well while doing so.
	Requirements		• 20°C {68°F} : 241.8 kΩ • 50°C {122°F} : 106.2 $^{+74.3}_{-41.8}$ kΩ • 100°C {212°F} : 33.56 $^{+17.60}_{-10.60}$ kΩ • 150°C {302°F} : 13.90 $^{+5.36}_{-3.60}$ kΩ • 200°C {392°F} : 6.896 $^{+2.064}_{-1.252}$ kΩ
	Inspection result (Is the judging standard satisfied?)	YES	Go to step 3.
		NO	Cleaning of sensor

<Step 2 inspection diagram>

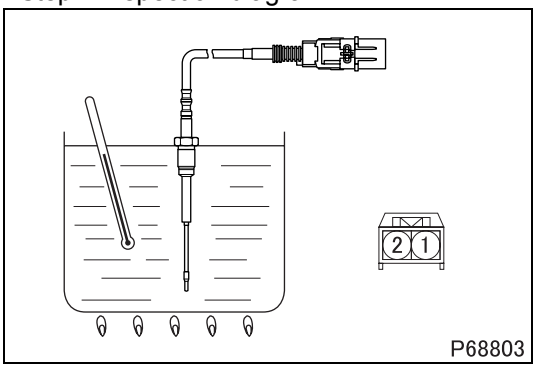

Step 3	Inspection items		Inspection of oil level
	Maintenance item		Inspection of engine oil level
	Inspection condition		Engine stopped
	Requirements		Oil level for inspection is not exceeded.
	Inspection result (Is the judging standard satisfied?)	YES	Go to step 4.
		NO	After replacement of oil, go to step 4

<Step 3 inspection diagram>

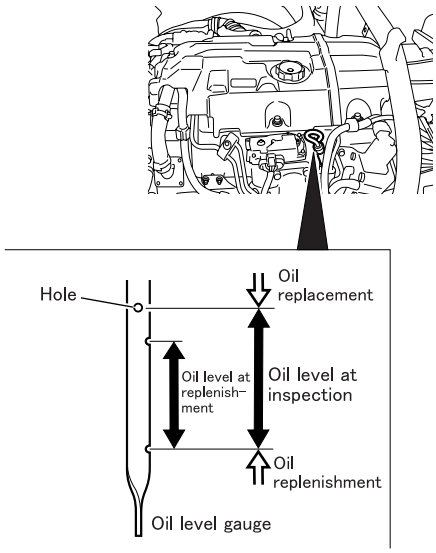

P103677E

Step 4	Inspection items		Inspection of pressure hose
	Maintenance item		Check pressure hose of DPF absolute pressure sensor and DPF pressure sensor (DIFF) for connection and cracks.
	Inspection condition		–
	Requirements		Nothing abnormal detected
	Inspection result (Is the judging standard satisfied?)	YES	Go to step 5.
		NO	After correction and replacement of hose, go to step 5.

Step 5	Inspection items		Unit inspection of diesel particulate filter
	Maintenance item		Check the exhaust passage inside the diesel particulate filter for adhesion of soot in large quantity.
	Inspection condition		Remove diesel particulate filter.
	Requirements		No soot is deposited.
	Inspection result (Is the judging standard satisfied?)	YES	Go to step 6.
		NO	After replacement of ceramic filter, perform resetting the DPF-related information.

<Step 5 inspection diagram>

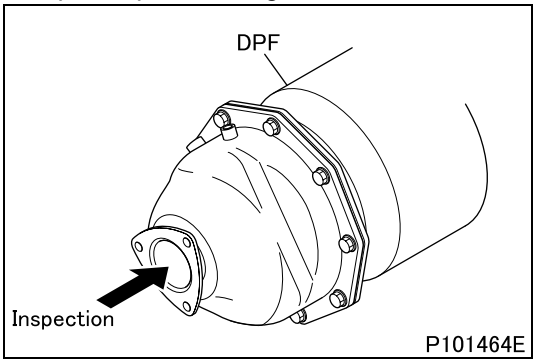

Step 6	Inspection items		Diesel Particulate Filter Unit Inspection for Clogging and Cleaning the Diesel Particulate Filter Unit
	Maintenance item		See Gr15 “Diesel Particulate Filter Unit Inspection for Clogging and Cleaning the Diesel Particulate Filter Unit”
	Inspection condition		Perform the following preparatory works. • Place the transmission in neutral (place the automatic transmission in P range). • Turn the steering wheel in neutral position and securely apply the parking brake. • Turn off air conditioner not to increase the engine speed. • Check diagnosis code of each electronic control system. If any fault exists, rectify it. • Resetting the DPF-related information (perform “History reset” of Multi-Use Tester) (See Gr15 “Resetting the DPF-related Information”.) • Warm up the engine until the engine coolant has been heated to more than 70°C {158°F} (verify from Service Data “Engine Coolant Temperature” or “31: Water Temperature”).
	Requirements		This diagnosis code does not occur again.
	Inspection result (Is the judging standard satisfied?)	YES	Go to step 7.
		NO	Replacement of electronic control unit

Step 7	Inspection items		Inspection of sensor unit
	Maintenance item		Measure value of voltage between connector terminal No. 2 (+) and 1 (–).
	Inspection condition		• Apply voltage DC 5 V across terminals No. 3 (+) and 1 (–). • Gradually increase applied air pressure.
	Requirements		• 0 ± 3.5 kPa {0 ± 0.5 psi, 0 ± 0.04 kgf/cm^2}: 1 V • 100 ± 3.5 kPa {15 ± 0.5 psi, 1.02 ± 0.04 kgf/cm^2}: 4.5 V
	Inspection result (Is the judging standard satisfied?)	YES	Go to step 8.
		NO	Replacement of sensor

<Step 7 inspection diagram>

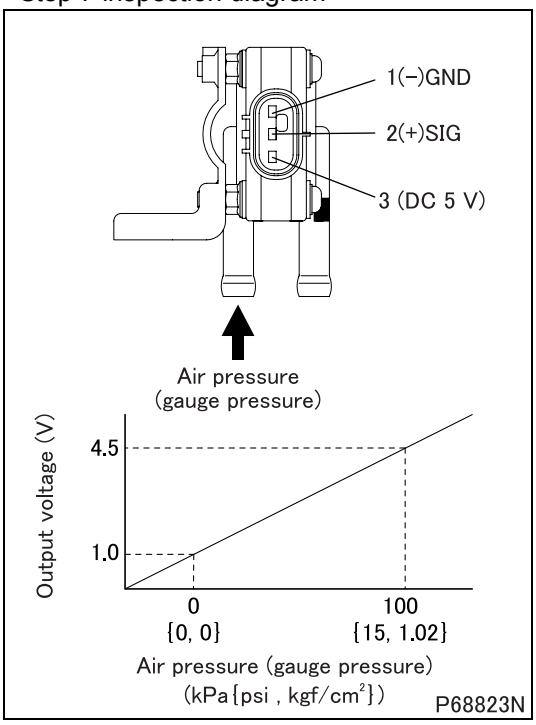

Step 8	Inspection items		Inspection of sensor unit
	Maintenance item		Since inspection of single part is not easy, whether characteristics are deteriorated or not must be checked for the sensor mounted on the current vehicle by measuring and comparing the amount of sensor intake air of the sensor currently mounted on vehicle and that replaced with new one by the service data. **(1) Prepare for inspection** • Clean or replace air cleaner element. • Prepare a new air flow sensor. • Warm up the engine fully. **(2) Measure the intake air of current sensor** • Keep pressing the accelerator pedal until it bottom the stopper bolt from the idling state. (no load maximum rotation) • Measure the following items from among “Service data”. **<General Scanning Tool used>** • Engine speed: “Ne” (rpm) • Intake air flow rate: “Air Flow Rate from MAFS” (g/s) **<Multi-Use Tester used>** • Engine speed: 01 “Engine Revolution” (rpm) • Intake air flow rate: 60 “Air mass flow” (g/s) **(3) Measure the intake air of new sensor** • Replace the currently mounted sensor with a new sensor. • Keep pressing the accelerator pedal until it bottom the stopper bolt from the idling state. (no load maximum rotation) • Measure intake air flow at the same rpm as that of engine revolution in item (2) of “Service data”. **(4) Comparison whether characteristics are deteriorated** • Calculate the characteristics deterioration factor (%) by the following equation. • Characteristics deterioration factor (%) = (intake air of new item – current intake air) × 100/intake air of new item.
	Inspection condition		–
	Requirements		10% or less
	Inspection result (Is the judging standard satisfied?)	YES	Go to step 9.
		NO	Replacement of sensor

Step 9	Inspection items		Inspection by control data
	Maintenance item		Perform actuator test item No. B2 “Fuel Leak Check”.
	Inspection condition		Engine start: At idle
	Requirements		There is no leak from injectors (four).
	Inspection result (Is the judging standard satisfied?)	YES	Replacement of diesel particulate filter
		NO	Replacement of injector

[Fault code]
Diagnosis code: P1421/Flash code: 92
[Monitor]
Diesel particulate filter clogged
[Fault (outline)]
Plausibility
[Diagnosis check]
- Particulate matter (PM) deposit estimated by engine electronic control unit exceeded specified value.

[Code generation condition]
- Particulate matter (PM) deposit is more than specified value (clogging level: low).
  (Warning lamp is lit and diagnosis code is displayed on first establishment of code generation condition.)

[Diagnosis check timing]
- Fault diagnosis is performed only once during the driving cycle.

[Diagnostic requirement]
–

[Control effected by electronic control unit during fault]
- Engine torque is limited.
- Auto cruise control stopped
- Traction control is stopped <Automatic transmission>

[Probable cause of trouble]
- Failure of diesel particulate filter indicator lamp
- Failure of diesel particulate filter cleaning switch
- Manual diesel particulate filter regeneration is not performed.
- Excessive smoke emission (due to malfunction of engine proper, common rail or exhaust gas recirculation system)
- Malfunction of air flow sensor
- Malfunction of DPF absolute pressure sensor or DPF pressure sensor (DIFF)
- Malfunction of diesel particulate filter

[Recoverability]
- Recovered if signal becomes normal with starter switch in ON position.
  (Warning lamp is extinguished and diagnosis code is cleared simultaneously with recovery.)

[Electronic Control Unit Connection Diagram]

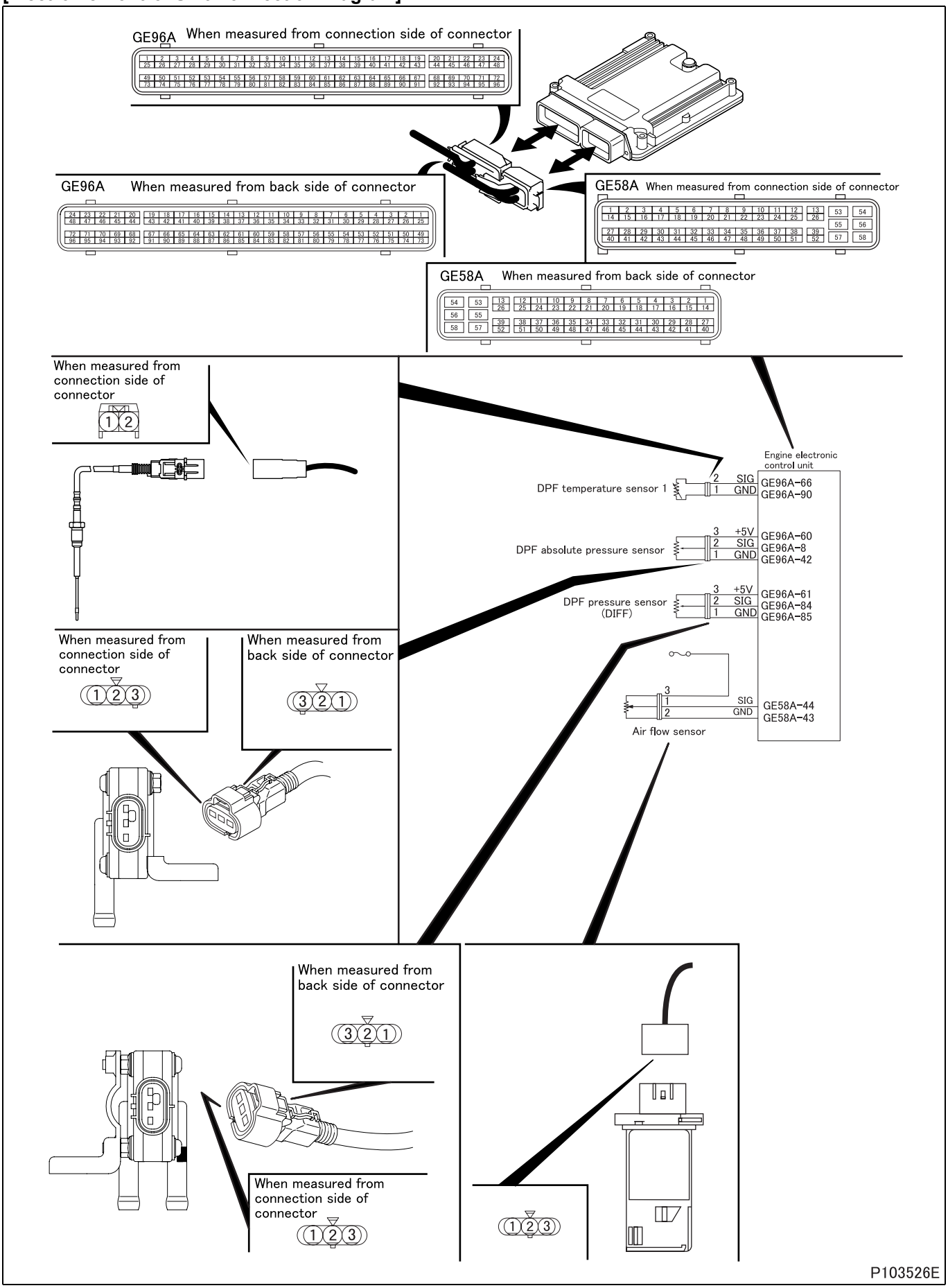

[Parts Identification and Location]

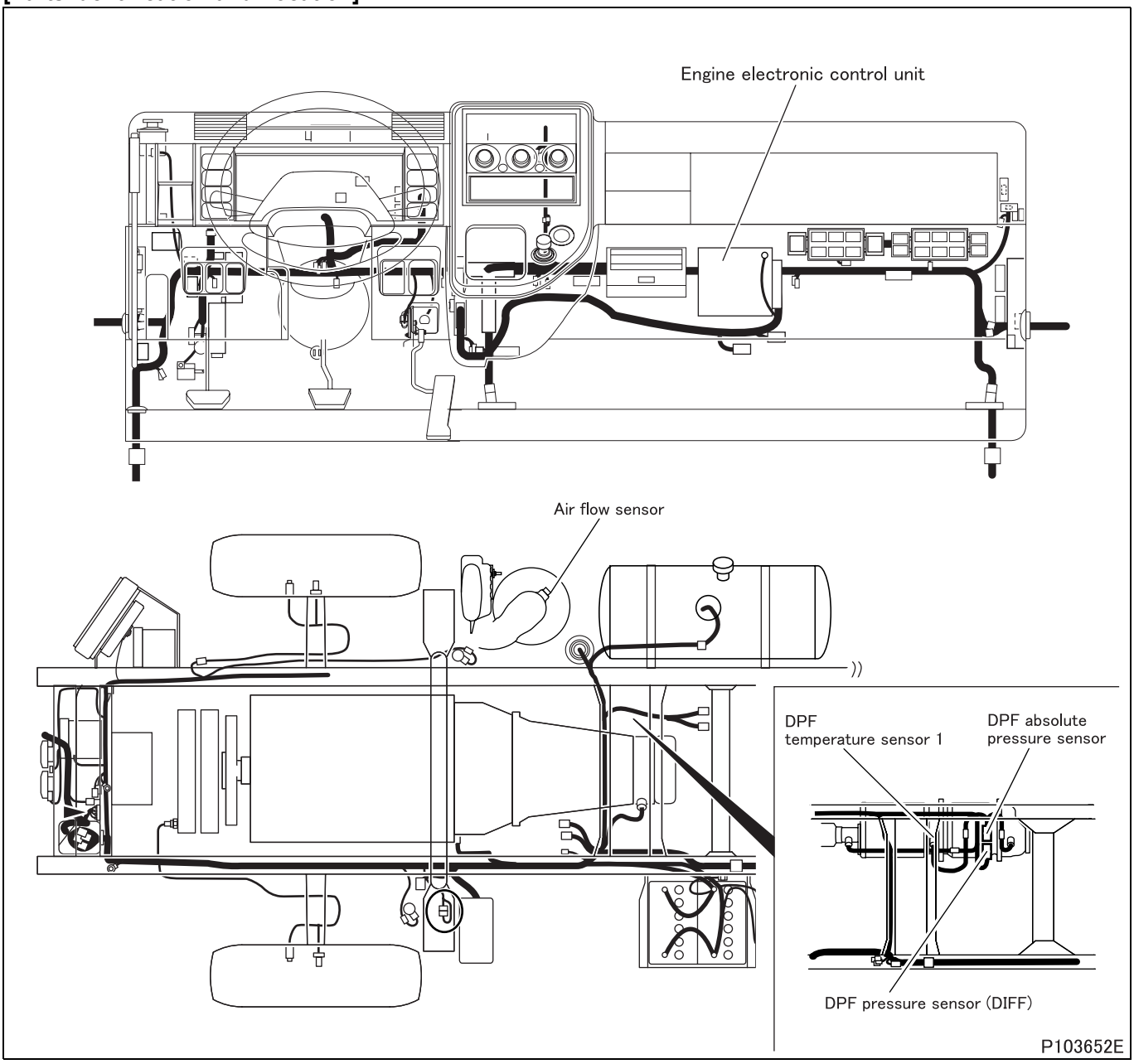

[Fault diagnosis]

- Perform checks in the sequence of the following steps.

Step 1	Inspection items		Inspection of oil level
	Maintenance item		Inspection of engine oil level
	Inspection condition		Engine stopped
	Requirements		Oil level for inspection is not exceeded.
	Inspection result (Is the judging standard satisfied?)	YES	Go to step 2.
		NO	After replacement of oil, go to step 2

<Step 1 inspection diagram>

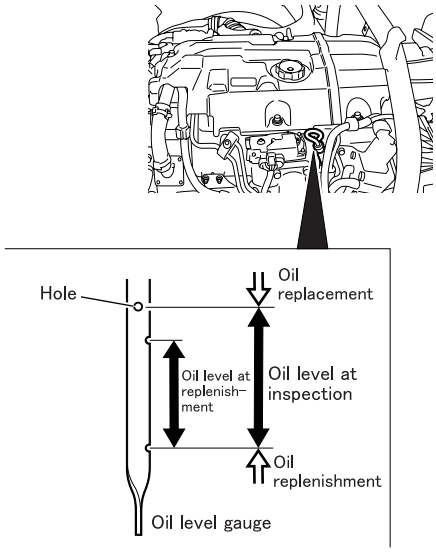

P103677E

Step 2	Inspection items		Inspection by manual diesel particulate filter regeneration
	Maintenance item		Perform Multi-Use Tester actuator test item No. A5 “DPF Regeneration (Manual)”, and clean ceramic diesel particulate filter.
	Inspection condition		• Vehicle: stationary (vehicle speed 0 km/h {0 MPH}) • Starter switch: ON (engine started) • Engine: idling • Place the transmission in neutral. (place the automatic transmission in P range) • Parking brake: vehicle parked (parking brake switch: ON) • After engine warm-up
	Requirements		This diagnosis code does not occur again.
	Inspection result (Is the judging standard satisfied?)	YES	End of inspection
		NO	Go to step 3.

Step 3	Inspection items		Unit inspection of diesel particulate filter
	Maintenance item		Check the exhaust passage inside the diesel particulate filter for adhesion of soot in large quantity.
	Inspection condition		Remove diesel particulate filter.
	Requirements		No soot is deposited.
	Inspection result (Is the judging standard satisfied?)	YES	Go to step 4.
		NO	After replacement of ceramic filter, perform resetting the DPF-related information.

<Step 3 inspection diagram>

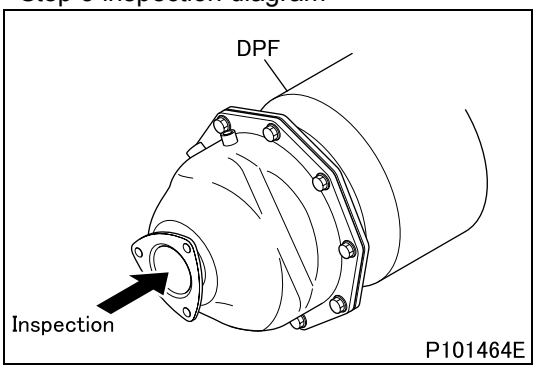

Step 4	Inspection items		Diesel Particulate Filter Unit Inspection for Clogging and Cleaning the Diesel Particulate Filter Unit
	Maintenance item		See Gr15 “Diesel Particulate Filter Unit Inspection for Clogging and Cleaning the Diesel Particulate Filter Unit”
	Inspection condition		Perform the following preparatory works. • Place the transmission in neutral. (place the automatic transmission in P range) • Turn the steering wheel in neutral position and securely apply the parking brake. • Turn off air conditioner not to increase the engine speed. • Check diagnosis code of each electronic control system. If any fault exists, rectify it. • Resetting the DPF-related information (perform “History reset” of Multi-Use Tester) (See Gr15 “Resetting the DPF-related information”.) • Warm up the engine until the engine coolant has been heated to more than 70°C {158°F}. (verify from Service Data “Engine Coolant Temperature” or “31: Water Temperature”)
	Requirements		This diagnosis code does not occur again.
	Inspection result (Is the judging standard satisfied?)	YES	End of inspection
		NO	Go to step 5.

Step 5	Inspection items		Inspection by control data
	Maintenance item		Measure item No. B8 “DPF Indicator Lamp” of Service Data.
	Inspection condition		Perform Multi-Use Tester actuator test item No. A6 “DPF Lamp”.
	Requirements		Diesel particulate filter indicator lamp illuminates (automatic reset after 15 seconds)
	Inspection result (Is the judging standard satisfied?)	YES	Go to step 6.
		NO	Replacement of engine electronic control unit

Step 6	Inspection items		Inspection by control data
	Maintenance item		Measure item No. A4 “DPF SW” of Service Data.
	Inspection condition		–
	Requirements		Press diesel particulate filter cleaning switch and check that “DPF SW” display switches from OFF to ON.
	Inspection result (Is the judging standard satisfied?)	YES	Go to step 7.
		NO	Replacement of diesel particulate filter cleaning switch or engine electronic control unit

Step 7	Inspection items		Inspection of pressure hose
	Maintenance item		Check pressure hose of DPF absolute pressure sensor and DPF pressure sensor (DIFF) for connection and cracks.
	Inspection condition		–
	Requirements		Nothing abnormal detected
	Inspection result (Is the judging standard satisfied?)	YES	Go to step 8.
		NO	After correction and replacement of hose, go to step 8.

Step 8	Inspection items		Inspection of DPF temperature sensor 1 unit
	Maintenance item		Measure value of resistance between connector terminal No. 1 and 2.
	Inspection condition		• Put DPF temperature sensor 1 in container filled with engine oil. • Heat the oil to each of the specified temperatures. Stir the oil well while doing so.
	Requirements		• 20°C {68°F} : 241.8 kΩ • 50°C {122°F} : 106.2 $^{+74.3}_{-41.8}$ kΩ • 100°C {212°F} : 33.56 $^{+17.60}_{-10.60}$ kΩ • 150°C {302°F} : 13.90 $^{+5.36}_{-3.60}$ kΩ • 200°C {392°F} : 6.896 $^{+2.064}_{-1.252}$ kΩ
	Inspection result (Is the judging standard satisfied?)	YES	Go to step 9.
		NO	Cleaning of sensor

<Step 8 inspection diagram>

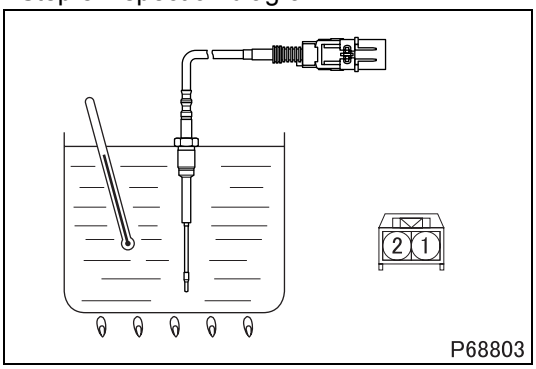

Step 9	Inspection items		Inspection of DPF pressure sensor (DIFF)
	Maintenance item		Measure value of voltage between connector terminal No. 2 (+) and 1 (–).
	Inspection condition		• Apply voltage DC 5 V across terminals No. 3 (+) and 1 (–). • Gradually increase applied air pressure.
	Requirements		• 0 ± 3.5 kPa {0 ± 0.5 psi, 0 ± 0.04 kgf/cm^2}: 1 V • 100 ± 3.5 kPa {15 ± 0.5 psi, 1.02 ± 0.04 kgf/cm^2}: 4.5 V
	Inspection result (Is the judging standard satisfied?)	YES	Go to step 10.
		NO	Replacement of DPF pressure sensor (DIFF)

<Step 9 inspection diagram>

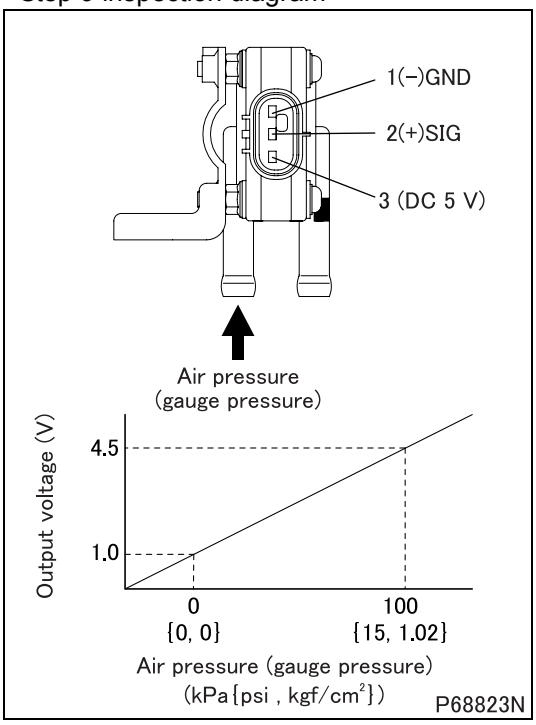

Step 10	Inspection items		Inspection of air flow sensor unit
	Maintenance item		Since inspection of single part is not easy, whether characteristics are deteriorated or not must be checked for the sensor mounted on the current vehicle by measuring and comparing the amount of sensor intake air of the sensor currently mounted on vehicle and that replaced with new one by the service data. **(1) Prepare for inspection** • Clean or replace air cleaner element. • Prepare a new air flow sensor. • Warm up the engine fully. **(2) Measure the intake air of current sensor** • Keep pressing the accelerator pedal until it bottom the stopper bolt from the idling state. (no load maximum rotation) • Measure the following items from among “Service data”. **<General Scanning Tool used>** • Engine speed: “Ne” (rpm) • Intake air flow rate: “Air Flow Rate from MAFS” (g/s) **<Multi-Use Tester used>** • Engine speed: 01 “Engine Revolution” (rpm) • Intake air flow rate: 60 “Air mass flow” (g/s) **(3) Measure the intake air of new sensor** • Replace the currently mounted sensor with a new sensor. • Keep pressing the accelerator pedal until it bottom the stopper bolt from the idling state. (no load maximum rotation) • Measure intake air flow at the same rpm as that of engine revolution in item (2) of “Service data”. **(4) Comparison whether characteristics are deteriorated** • Calculate the characteristics deterioration factor (%) by the following equation. • Characteristics deterioration factor (%) = (intake air of new item – current intake air) × 100/intake air of new item.
	Inspection condition		–
	Requirements		10% or less
	Inspection result (Is the judging standard satisfied?)	YES	Go to step 11.
		NO	Replacement of air flow sensor

Step 11	Inspection items		Inspection by control data
	Maintenance item		Perform actuator test item No. B2 “Fuel Leak Check”.
	Inspection condition		Engine start: At idle
	Requirements		There is no leak from injectors (four).
	Inspection result (Is the judging standard satisfied?)	YES	• Inspection of exhaust gas recirculation system (exhaust gas recirculation pipe, exhaust gas recirculation cooler, exhaust gas recirculation valve) • Inspection of engine
		NO	Replacement of injector

[Fault code]
Diagnosis code: P1422/Flash code: 92
[Monitor]
Diesel particulate filter clogged
[Fault (outline)]
Plausibility
[Diagnosis check]
- Particulate matter (PM) deposit estimated by engine electronic control unit exceeded specified value.

[Code generation condition]
- Particulate matter (PM) deposit is more than specified value (clogging level: medium to high).
  (Warning lamp is lit and diagnosis code is displayed on first establishment of code generation condition.)

[Diagnosis check timing]
- Fault diagnosis is performed only once during the driving cycle.

[Diagnostic requirement]
–

[Control effected by electronic control unit during fault]
- Engine torque is limited.
- Auto cruise control stopped
- Traction control is stopped <Automatic transmission>
- Diesel particulate filter regeneration is stopped.

[Probable cause of trouble]
- Failure of diesel particulate filter indicator lamp
- Failure of diesel particulate filter cleaning switch
- Manual diesel particulate filter regeneration is not performed.
- Excessive smoke emission (due to malfunction of engine proper, common rail or exhaust gas recirculation system)
- Malfunction of air flow sensor
- Malfunction of DPF absolute pressure sensor or DPF pressure sensor (DIFF)
- Malfunction of diesel particulate filter

[Recoverability]
- Recovered if signal becomes normal when starter switch is turned OFF to ON (power supply resumed to electronic control unit).
  (Warning lamp is extinguished and diagnosis code is cleared simultaneously with recovery.)

[Electronic Control Unit Connection Diagram]

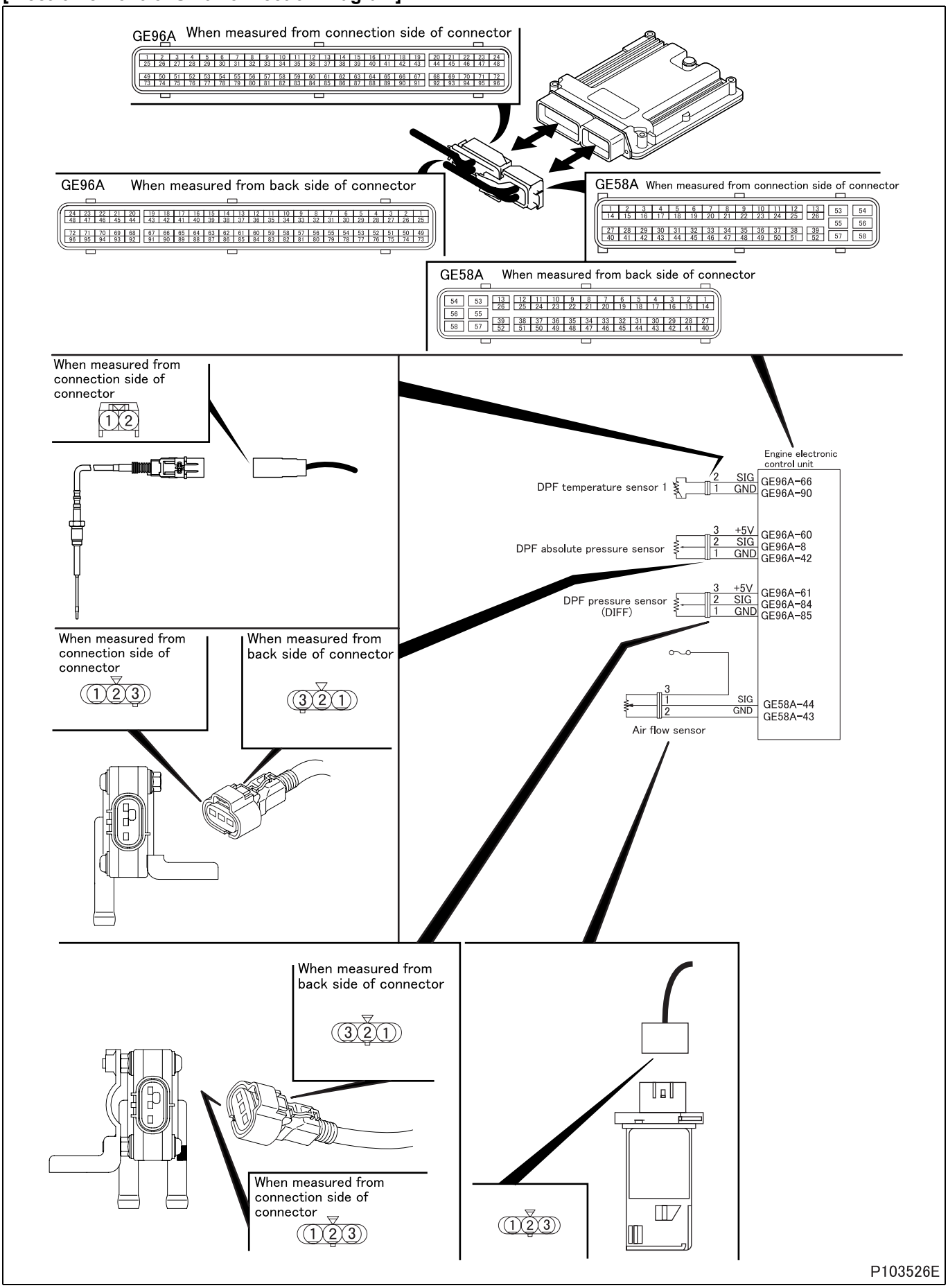

P103526E

[Parts Identification and Location]

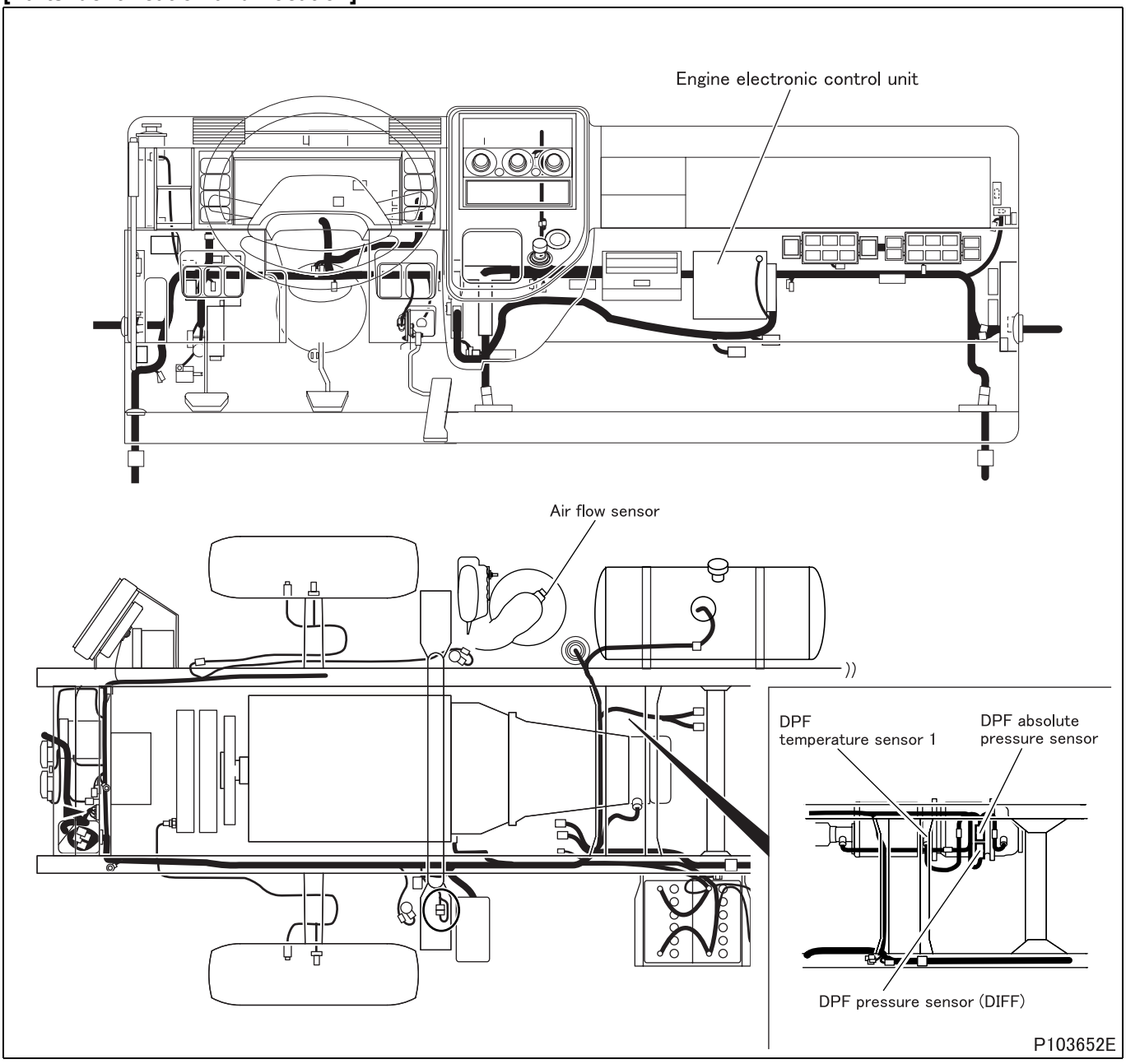

[Fault diagnosis]

- Perform checks in the sequence of the following steps.

Step 1	Inspection items		Unit inspection of diesel particulate filter
	Maintenance item		Check the exhaust passage inside the diesel particulate filter for adhesion of soot in large quantity.
	Inspection condition		Remove diesel particulate filter.
	Requirements		No soot is deposited.
	Inspection result (Is the judging standard satisfied?)	YES	Go to step 2.
		NO	After replacement of ceramic filter, perform resetting the DPF-related information.

<Step 1 inspection diagram>

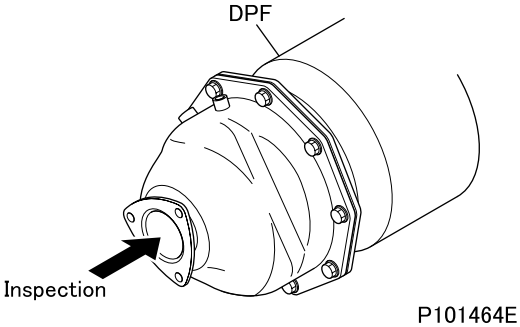

Step 2	Inspection items		Diesel Particulate Filter Unit Inspection for Clogging and Cleaning the Diesel Particulate Filter Unit
	Maintenance item		See Gr15 “Diesel Particulate Filter Unit Inspection for Clogging and Cleaning the Diesel Particulate Filter Unit”
	Inspection condition		Perform the following preparatory works. • Place the transmission in neutral. (place the automatic transmission in P range) • Turn the steering wheel in neutral position and securely apply the parking brake. • Turn off air conditioner not to increase the engine speed. • Check diagnosis code of each electronic control system. If any fault exists, rectify it. • Resetting the DPF-related information (perform “History reset” of Multi-Use Tester) (See Gr15 “Resetting the DPF-related information”.) • Warm up the engine until the engine coolant has been heated to more than 70°C {158°F}. (verify from Service Data “Engine Coolant Temperature” or “31: Water Temperature”)
	Requirements		This diagnosis code does not occur again.
	Inspection result (Is the judging standard satisfied?)	YES	End of inspection
		NO	Go to step 3.

Step 3	Inspection items		Inspection by control data
	Maintenance item		Measure item No. B8 “DPF Indicator Lamp” of Service Data.
	Inspection condition		Perform Multi-Use Tester actuator test item No. A6 “DPF Lamp”.
	Requirements		Diesel particulate filter indicator lamp illuminates (automatic reset after 15 seconds)
	Inspection result (Is the judging standard satisfied?)	YES	Go to step 4.
		NO	Replacement of engine electronic control unit

Step 4	Inspection items		Inspection by control data
	Maintenance item		Measure item No. A4 “DPF SW” of Service Data.
	Inspection condition		–
	Requirements		Press diesel particulate filter cleaning switch and check that “DPF SW” display switches from OFF to ON.
	Inspection result (Is the judging standard satisfied?)	YES	Go to step 5.
		NO	Replacement of diesel particulate filter cleaning switch or engine electronic control unit

Step 5	Inspection items		Inspection of pressure hose
	Maintenance item		Check pressure hose of DPF absolute pressure sensor and DPF pressure sensor (DIFF) for connection and cracks.
	Inspection condition		–
	Requirements		Nothing abnormal detected
	Inspection result (Is the judging standard satisfied?)	YES	Go to step 6.
		NO	After correction and replacement of hose, go to step 6.

Step 6	Inspection items		Inspection of DPF temperature sensor 1 unit
	Maintenance item		Measure value of resistance between connector terminal No. 1 and 2.
	Inspection condition		• Put DPF temperature sensor 1 in container filled with engine oil. • Heat the oil to each of the specified temperatures. Stir the oil well while doing so.
	Requirements		• 20°C {68°F} : 241.8 kΩ • 50°C {122°F} : 106.2 $^{+74.3}_{-41.8}$ kΩ • 100°C {212°F} : 33.56 $^{+17.60}_{-10.60}$ kΩ • 150°C {302°F} : 13.90 $^{+5.36}_{-3.60}$ kΩ • 200°C {392°F} : 6.896 $^{+2.064}_{-1.252}$ kΩ
	Inspection result (Is the judging standard satisfied?)	YES	Go to step 7.
		NO	Cleaning of sensor

<Step 6 inspection diagram>

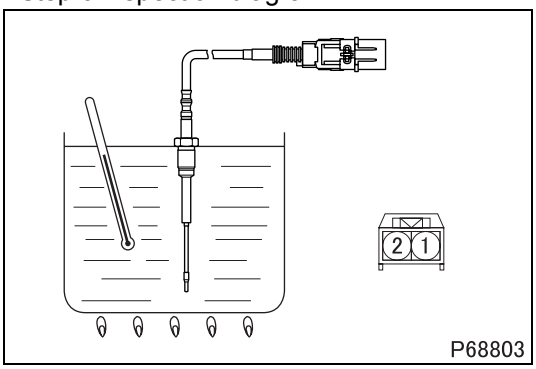

Step 7	Inspection items		Inspection of DPF pressure sensor (DIFF)
	Maintenance item		Measure value of voltage between connector terminal No. 2 (+) and 1 (–).
	Inspection condition		• Apply voltage DC 5 V across terminals No. 3 (+) and 1 (–). • Gradually increase applied air pressure.
	Requirements		• 0 ± 3.5 kPa {0 ± 0.5 psi, 0 ± 0.04 kgf/cm^2}: 1 V • 100 ± 3.5 kPa {15 ± 0.5 psi, 1.02 ± 0.04 kgf/cm^2}: 4.5 V
	Inspection result (Is the judging standard satisfied?)	YES	Go to step 8.
		NO	Replacement of DPF pressure sensor (DIFF)

<Step 7 inspection diagram>

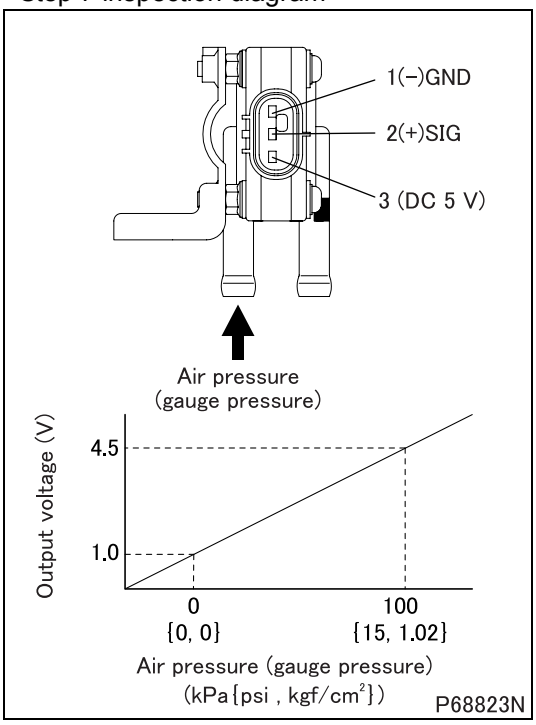

Step 8	Inspection items		Inspection of air flow sensor unit
	Maintenance item		Since inspection of single part is not easy, whether characteristics are deteriorated or not must be checked for the sensor mounted on the current vehicle by measuring and comparing the amount of sensor intake air of the sensor currently mounted on vehicle and that replaced with new one by the service data. **(1) Prepare for inspection** • Clean or replace air cleaner element. • Prepare a new air flow sensor. • Warm up the engine fully. **(2) Measure the intake air of current sensor** • Keep pressing the accelerator pedal until it bottom the stopper bolt from the idling state. (no load maximum rotation) • Measure the following items from among “Service data”. **<General Scanning Tool used>** • Engine speed: “Ne” (rpm) • Intake air flow rate: “Air Flow Rate from MAFS” (g/s) **<Multi-Use Tester used>** • Engine speed: 01 “Engine Revolution” (rpm) • Intake air flow rate: 60 “Air mass flow” (g/s) **(3) Measure the intake air of new sensor** • Replace the currently mounted sensor with a new sensor. • Keep pressing the accelerator pedal until it bottom the stopper bolt from the idling state. (no load maximum rotation) • Measure intake air flow at the same rpm as that of engine revolution in item (2) of “Service data”. **(4) Comparison whether characteristics are deteriorated** • Calculate the characteristics deterioration factor (%) by the following equation. • Characteristics deterioration factor (%) = (intake air of new item – current intake air) × 100/intake air of new item.
	Inspection condition		–
	Requirements		10% or less
	Inspection result (Is the judging standard satisfied?)	YES	Go to step 9.
		NO	Replacement of air flow sensor

Step 9	Inspection items		Inspection by control data
	Maintenance item		Perform actuator test item No. B2 “Fuel Leak Check”.
	Inspection condition		Engine start: At idle
	Requirements		There is no leak from injectors (four).
	Inspection result (Is the judging standard satisfied?)	YES	• Inspection of exhaust gas recirculation system (exhaust gas recirculation pipe, exhaust gas recirculation cooler, exhaust gas recirculation valve) • Inspection of engine
		NO	Replacement of injector

[Fault code]
Diagnosis code: P1430/Flash code: 78
[Monitor]
Failure of diesel particulate filter cleaning switch
[Fault (outline)]
Plausibility
[Diagnosis check]
- Working condition of diesel particulate filter cleaning switch during manual diesel particulate filter regeneration is monitored.

[Code generation condition]
- Output signal remains ON for 60 seconds after diesel particulate filter cleaning switch turned ON for manual filter regeneration is turned OFF.
  (Diagnosis code is displayed on first establishment of code generation condition.)

[Diagnosis check timing]
- Fault diagnosis is performed only once during the driving cycle.

[Diagnostic requirement]
–

[Control effected by electronic control unit during fault]
- Effects no special control.

[Probable cause of trouble]
- Open-circuit or short-circuit of harness between electronic control unit and switch
- Malfunction of each connector
- Malfunction of switch
- Malfunction of engine electronic control unit

[Recoverability]
- Recovered if signal becomes normal with starter switch in ON position.
  (Warning lamp and diagnosis code is cleared simultaneously with recovery.)

[Electronic Control Unit Connection Diagram]

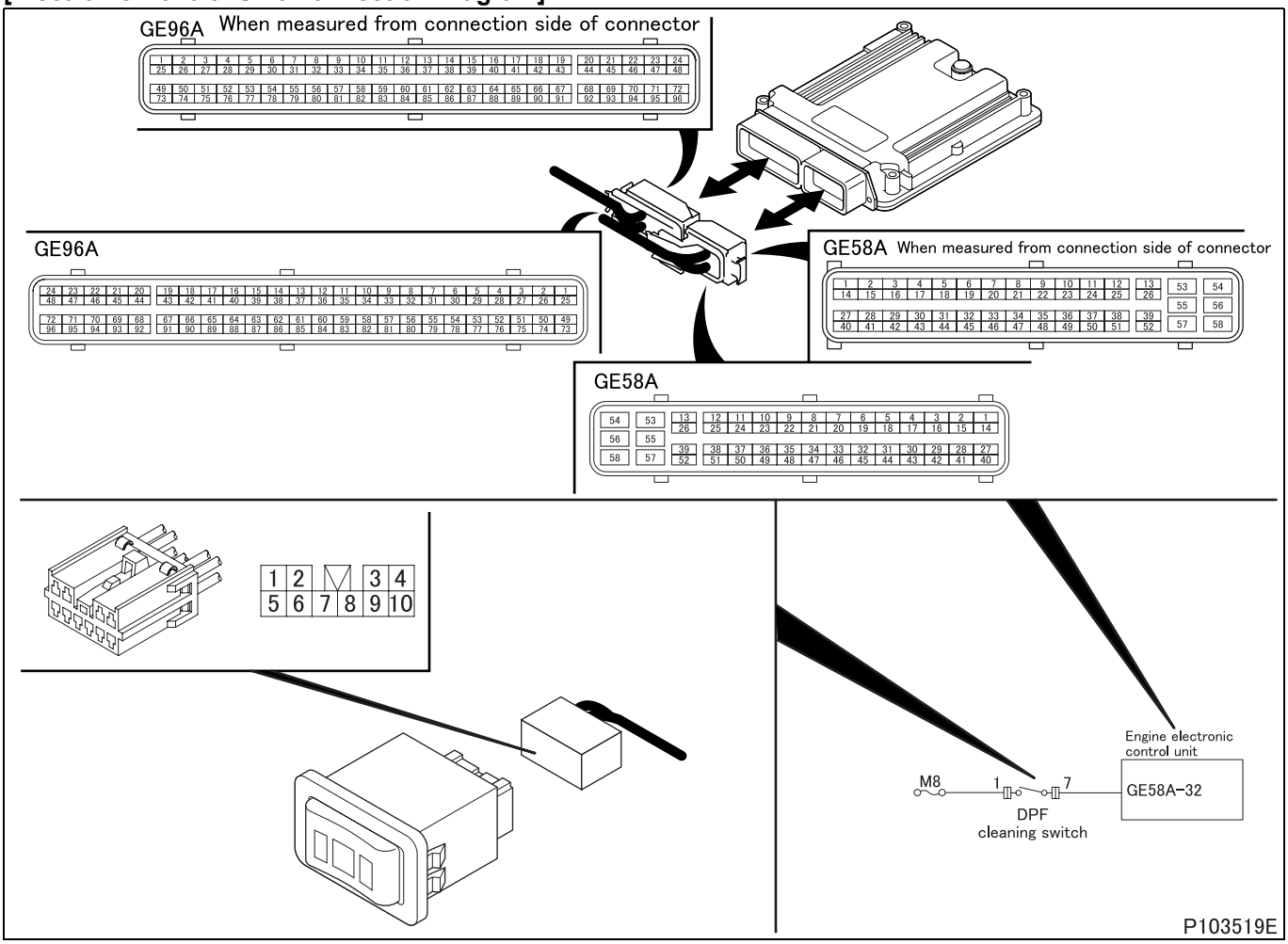

[Parts Identification and Location]

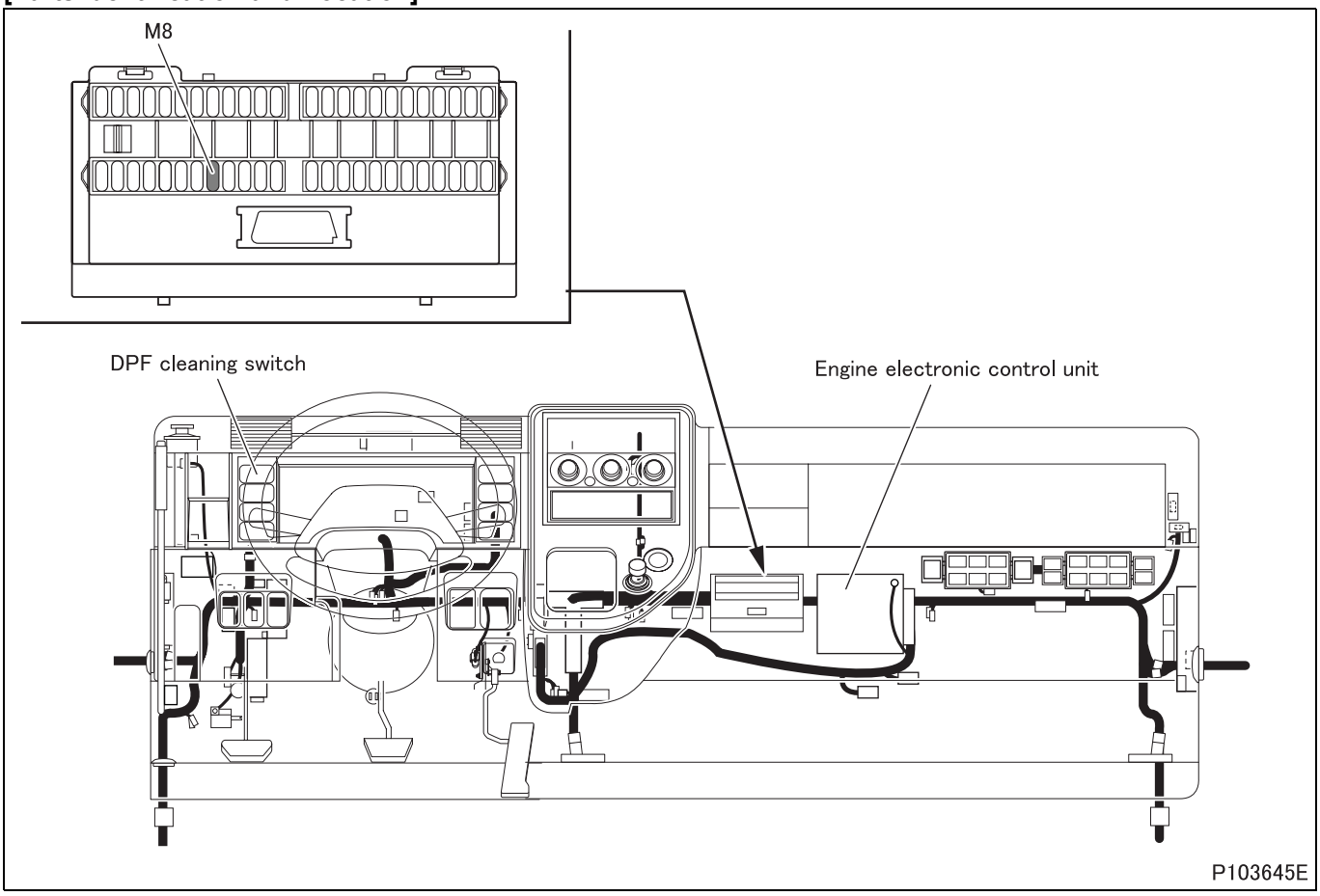

[Fault diagnosis]

- Perform checks in the sequence of the following steps.

Step 1	Inspection items		Inspection by control data
	Maintenance item		Measure item No. A4 “DPF SW” of Service Data.
	Inspection condition		–
	Requirements		Press diesel particulate filter cleaning switch and check that “DPF SW” display switches from OFF to ON.
	Inspection result (Is the judging standard satisfied?)	YES	Go to transient fault (See Gr00.).
		NO	Go to step 2.

Step 2	Inspection items		Inspection of electronic control unit connector
	Maintenance item		Inspection of connector
	Inspection condition		–
	Requirements		• Connector is properly connected. • No trace of water entry is found. • No corrosion is found in terminal. • Connection to terminal is appropriate.
	Inspection result (Is the judging standard satisfied?)	YES	Go to step 3.
		NO	Modify connector.

Step 3	Inspection items		Inspection of diesel particulate filter cleaning switch connector
	Maintenance item		Inspection of connector
	Inspection condition		–
	Requirements		• Connector is properly connected. • No trace of water entry is found. • No corrosion is found in terminal. • Connection to terminal is appropriate.
	Inspection result (Is the judging standard satisfied?)	YES	Go to step 4.
		NO	Modify connector.

Step 4	Inspection items		Inspection of diesel particulate filter cleaning switch unit
	Maintenance item		• Switch: Check continuity between connector terminal No. 1 and 8. • Switch ON: Check continuity between connector terminal No. 1 and 7.
	Inspection condition		Disconnect connector and measure switch side.
	Requirements		There is continuity.
	Inspection result (Is the judging standard satisfied?)	YES	Go to step 5.
		NO	Replacement of switch

<Step 4 inspection diagram>

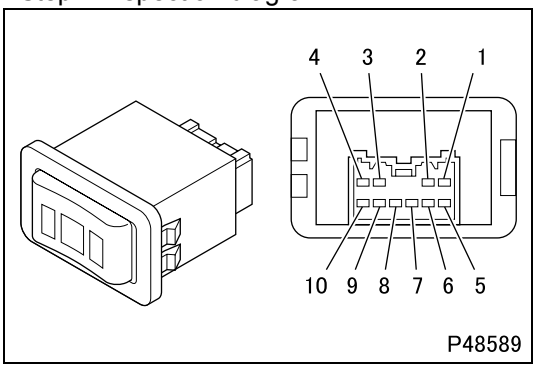

Step 5	Inspection items		Inspection of harness between electronic control unit and diesel particulate filter cleaning switch
	Maintenance item		Check circuit between electronic control unit connector (GE58A) terminal No. 32 and diesel particulate filter cleaning switch connector terminal No. 7.
	Inspection condition		Disconnect each device from harness and measure from connection side of harness connector.
	Requirements		There is continuity.
	Inspection result (Is the judging standard satisfied?)	YES	Go to step 6.
		NO	Modify harness.

Step 6	Inspection items		Inspection of harness between fuse and diesel particulate filter cleaning switch
	Maintenance item		Check circuit between fuse M8 and diesel particulate filter cleaning switch connector terminal No. 1.
	Inspection condition		Disconnect each device from harness and measure from connection side of harness connector.
	Requirements		There is continuity.
	Inspection result (Is the judging standard satisfied?)	YES	Go to step 7.
		NO	Modify harness.

Step 7	Inspection items		Inspection by control data
	Maintenance item		Measure item No. A4 “DPF SW” of Service Data.
	Inspection condition		–
	Requirements		Press diesel particulate filter cleaning switch and check that “DPF SW” display switches from OFF to ON.
	Inspection result (Is the judging standard satisfied?)	YES	Go to transient fault (See Gr00.).
		NO	Replacement of electronic control unit

[Fault code]
Diagnosis code: P1435/Flash code: 92
[Monitor]
Diesel particulate filter broken
[Fault (outline)]
Efficiency below threshold (blocked diesel particulate filter)
[Diagnosis check]
- Ceramic filter is monitored for clogging through DPF pressure sensor (DIFF) during operation of diesel particulate filter regeneration function.

[Code generation condition]
- Difference between actual diesel particulate filter pressure and maximum pressure calculated by electronic control unit remains out of control map for 10 seconds.
  (Warning lamp is lit and diagnosis code is displayed on third establishment of code generation condition.)

[Diagnosis check timing]
- Fault diagnosis is performed only once during the driving cycle.

[Diagnostic requirement]
- Engine operating mode: normal (engine in operation)
- Pressure adjustment in DPF pressure sensor (DIFF):
  Has been carried out this drive cycle ; for drift correction, the following conditions exist for >5s :
  - Engine speed: less than 875 rpm
  - Fuel injection quantity: below 25 mg/cyc
  - Exhaust flow rate: less than 90 m^3/h
  - Exhaust gas recirculation valve position: more than 8 mm {0.3 in.}
- Exhaust volume-flow rate: 500 to 900 m^3/h
- Diesel particulate filter inlet temperature: 200 to 400°C {392 to 752°F}
- Water temperature: 65 to 110°C {149 to 230°F}
- Atmospheric pressure: more than 750 mbar {10.87 psi}
- Approximate environment atmospheric temperature: –7 to 50°C {19 to 122°F}
- Frequency of diesel particulate filter regeneration control: less than 3 times (discontinued after start of diesel particulate filter regeneration control)
- Soot deposit: 15 to 30 g {0.53 to 1.06 oz}
- Diesel particulate filter regeneration control: not effected
- Controller area network communication of exhaust gas recirculation electronic drive unit: in order
- DPF pressure sensor (DIFF): in order
- Air flow sensor: in order
- Atmospheric pressure sensor: in order
- Water temperature sensor: in order
- Intake air temperature sensor: in order
- Catalytic temperature sensor: in order
- DPF temperature sensor 1: in order
- Sensor 5 V power supply: in order
- Battery voltage: in order
- MPROP (rail pressure control valve): in order

[Control effected by electronic control unit during fault]
Electronic control unit differs in the way of control by the engine model.
<Except FE83>
- Engine torque is limited.
- Exhaust gas recirculation control is stopped.
- Throttle controls disabled
- Diesel particulate filter regeneration is stopped.
- Turbocharger actuator test is inhibited.
- Related fault check is stopped.

<FE83>
- Particulate matter deposit computation is stopped.
- Related fault check is stopped.

[Probable cause of trouble]
- Damage of ceramic filter
- Failure of diesel particulate filter indicator lamp
- Failure of diesel particulate filter cleaning switch
- Manual diesel particulate filter regeneration is not performed.
- Excessive smoke emission (due to malfunction of engine proper, common rail or exhaust gas recirculation system)
- Malfunction of air flow sensor
- Malfunction of DPF absolute pressure sensor or DPF pressure sensor (DIFF)

[Recoverability]
- Recovered if signal becomes normal with starter switch in ON position.
  (Warning lamp is extinguished and diagnosis code is cleared at fourth display of diagnosis code after recovery.)

[Electronic Control Unit Connection Diagram]

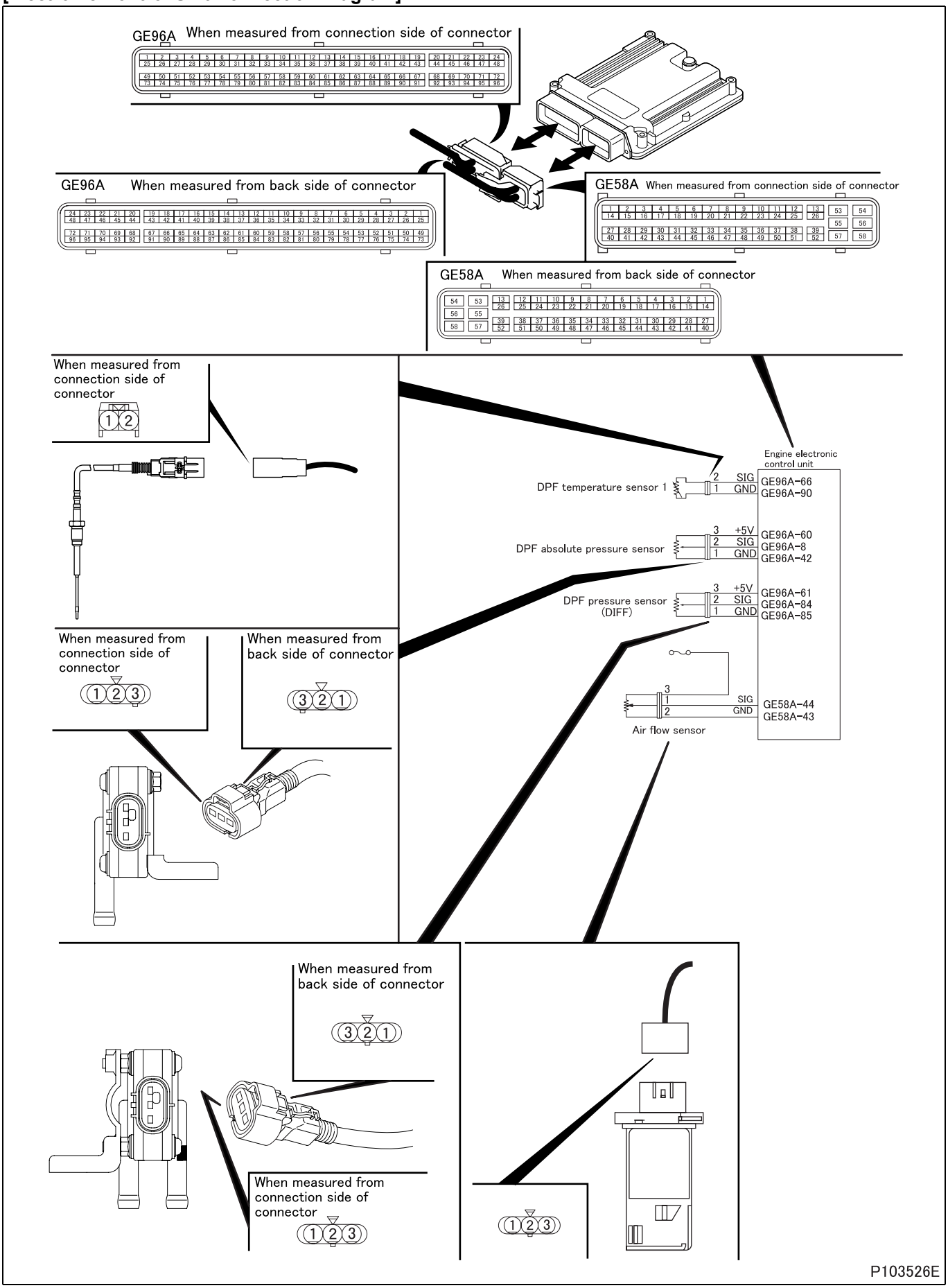

P103526E

[Parts Identification and Location]

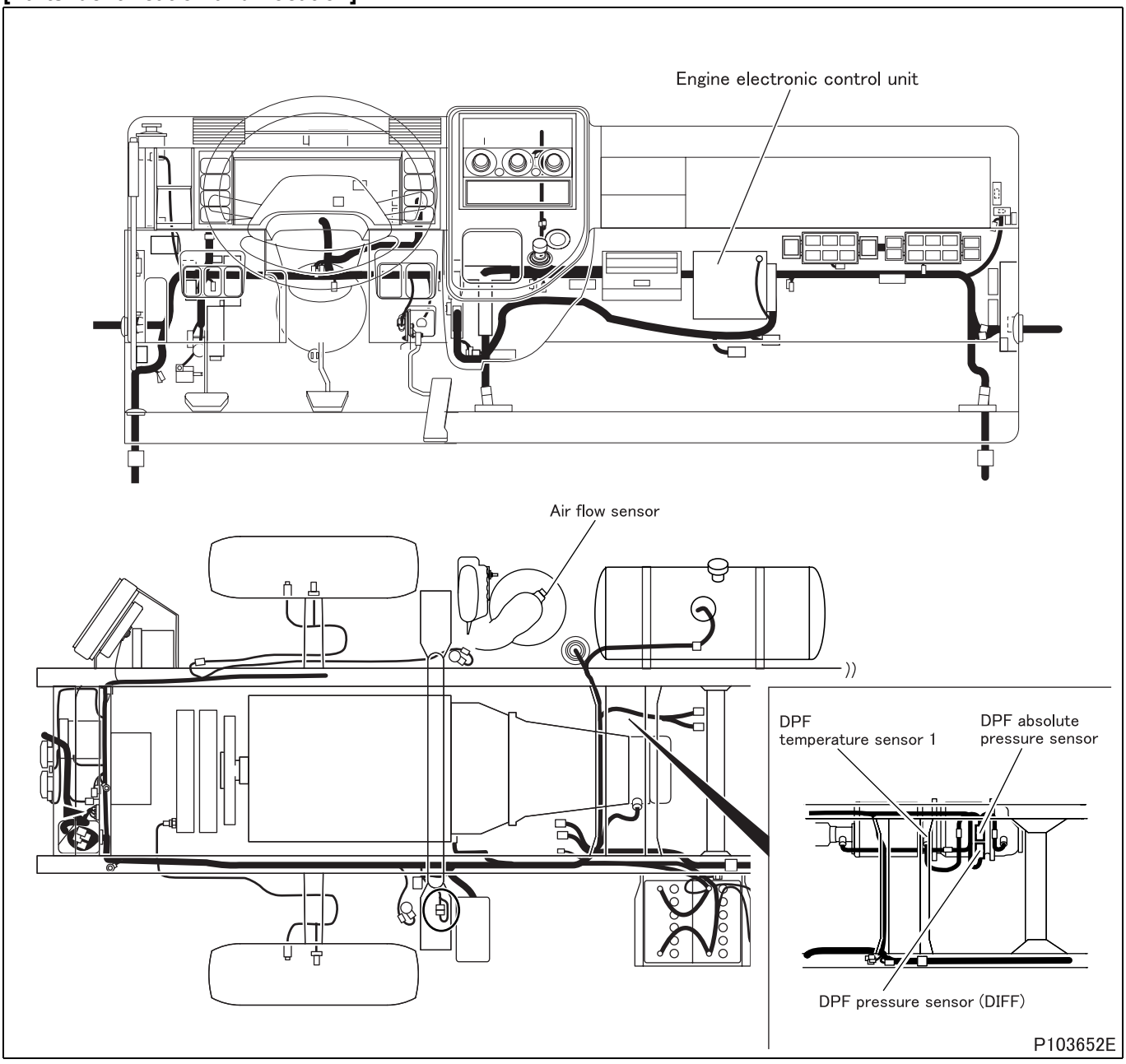

[Fault diagnosis]

- Perform checks in the sequence of the following steps.

Step 1	Inspection items		Unit inspection of diesel particulate filter
	Maintenance item		Check the exhaust passage inside the diesel particulate filter for adhesion of soot in large quantity.
	Inspection condition		Remove diesel particulate filter.
	Requirements		No soot is deposited.
	Inspection result (Is the judging standard satisfied?)	YES	Go to step 2.
		NO	After replacement of ceramic filter, perform resetting the DPF-related information.

<Step 1 inspection diagram>

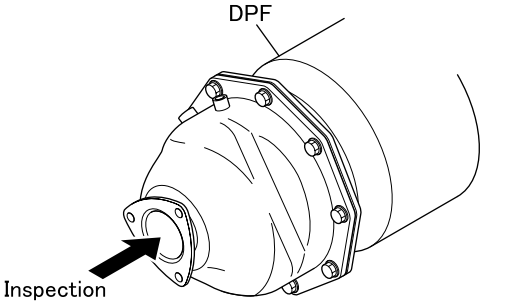

Step 2	Inspection items		Diesel Particulate Filter Unit Inspection for Clogging and Cleaning the Diesel Particulate Filter Unit
	Maintenance item		See Gr15 “Diesel Particulate Filter Unit Inspection for Clogging and Cleaning the Diesel Particulate Filter Unit”
	Inspection condition		Perform the following preparatory works. • Place the transmission in neutral. (place the automatic transmission in P range) • Turn the steering wheel in neutral position and securely apply the parking brake. • Turn off air conditioner not to increase the engine speed. • Check diagnosis code of each electronic control system. If any fault exists, rectify it. • Resetting the DPF-related information (perform “History reset” of Multi-Use Tester) (See Gr15 “Resetting the DPF-related information”.) • Warm up the engine until the engine coolant has been heated to more than 70°C {158°F}. (verify from Service Data “Engine Coolant Temperature” or “31: Water Temperature”)
	Requirements		This diagnosis code does not occur again.
	Inspection result (Is the judging standard satisfied?)	YES	End of inspection
		NO	Go to step 3.

Step 3	Inspection items		Inspection by control data
	Maintenance item		Measure item No. B8 “DPF Indicator Lamp” of Service Data.
	Inspection condition		Perform Multi-Use Tester actuator test item No. A6 “DPF Lamp”.
	Requirements		Diesel particulate filter indicator lamp illuminates (automatic reset after 15 seconds)
	Inspection result (Is the judging standard satisfied?)	YES	Go to step 4.
		NO	Replacement of engine electronic control unit

Step 4	Inspection items		Inspection by control data
	Maintenance item		Measure item No. A4 “DPF SW” of Service Data.
	Inspection condition		–
	Requirements		Press diesel particulate filter cleaning switch and check that “DPF SW” display switches from OFF to ON.
	Inspection result (Is the judging standard satisfied?)	YES	Go to step 5.
		NO	Replacement of diesel particulate filter cleaning switch or engine electronic control unit

Step 5	Inspection items		Inspection of pressure hose
	Maintenance item		Check pressure hose of DPF absolute pressure sensor and DPF pressure sensor (DIFF) for connection and cracks.
	Inspection condition		–
	Requirements		Nothing abnormal detected
	Inspection result (Is the judging standard satisfied?)	YES	Go to step 6.
		NO	After correction and replacement of hose, go to step 6.

Step 6	Inspection items		Inspection of DPF pressure sensor (DIFF)
	Maintenance item		Measure value of voltage between connector terminal No. 2 (+) and 1 (–).
	Inspection condition		• Apply voltage DC 5 V across terminals No. 3 (+) and 1 (–). • Gradually increase applied air pressure.
	Requirements		• 0 ± 3.5 kPa {0 ± 0.5 psi, 0 ± 0.04 kgf/cm^2}: 1 V • 100 ± 3.5 kPa {15 ± 0.5 psi, 1.02 ± 0.04 kgf/cm^2}: 4.5 V
	Inspection result (Is the judging standard satisfied?)	YES	Go to step 7.
		NO	Replacement of DPF pressure sensor (DIFF)

<Step 6 inspection diagram>

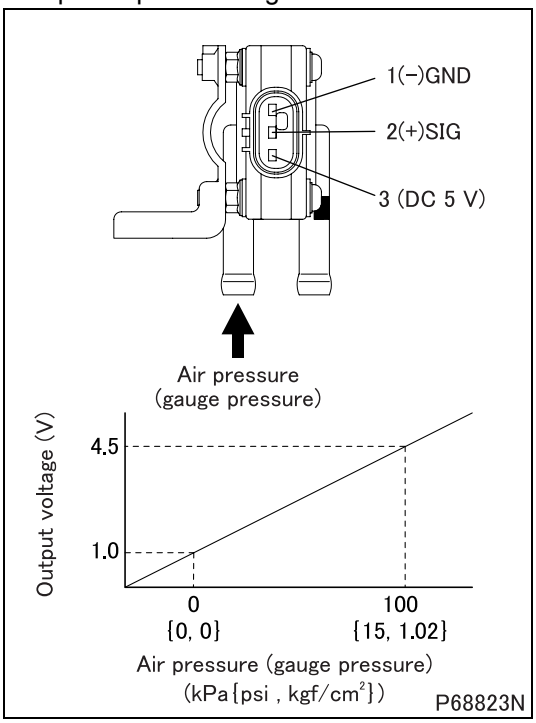

Step 7	Inspection items		Inspection of air flow sensor unit
	Maintenance item		Since inspection of single part is not easy, whether characteristics are deteriorated or not must be checked for the sensor mounted on the current vehicle by measuring and comparing the amount of sensor intake air of the sensor currently mounted on vehicle and that replaced with new one by the service data. **(1) Prepare for inspection** • Clean or replace air cleaner element. • Prepare a new air flow sensor. • Warm up the engine fully. **(2) Measure the intake air of current sensor** • Keep pressing the accelerator pedal until it bottom the stopper bolt from the idling state. (no load maximum rotation) • Measure the following items from among “Service data”. **<General Scanning Tool used>** • Engine speed: “Ne” (rpm) • Intake air flow rate: “Air Flow Rate from MAFS” (g/s) **<Multi-Use Tester used>** • Engine speed: 01 “Engine Revolution” (rpm) • Intake air flow rate: 60 “Air mass flow” (g/s) **(3) Measure the intake air of new sensor** • Replace the currently mounted sensor with a new sensor. • Keep pressing the accelerator pedal until it bottom the stopper bolt from the idling state. (no load maximum rotation) • Measure intake air flow at the same rpm as that of engine revolution in item (2) of “Service data”. **(4) Comparison whether characteristics are deteriorated** • Calculate the characteristics deterioration factor (%) by the following equation. • Characteristics deterioration factor (%) = (intake air of new item – current intake air) × 100/intake air of new item.
	Inspection condition		–
	Requirements		10% or less
	Inspection result (Is the judging standard satisfied?)	YES	Go to step 8.
		NO	Replacement of air flow sensor

Step 8	Inspection items		Inspection by control data
	Maintenance item		Perform actuator test item No. B2 “Fuel Leak Check”.
	Inspection condition		Engine start: At idle
	Requirements		There is no leak from injectors (four).
	Inspection result (Is the judging standard satisfied?)	YES	• Inspection of exhaust gas recirculation system (exhaust gas recirculation pipe, exhaust gas recirculation cooler, exhaust gas recirculation valve) • Inspection of engine
		NO	Replacement of injector

[Fault code]
Diagnosis code: P1440/Flash code: 92
[Monitor]
For counter recording of diagnosis code P1412, P1413, P1414
[Fault (outline)]
Plausibility
[Diagnosis check]
- Exhaust gas temperature during automatic diesel particulate filter regeneration is monitored through DPF temperature sensor 1 for abnormality arising from transient diesel particulate filter temperature control failure or very slow vehicle run.

[Code generation condition]
- Insufficient temperature rise occurred during automatic filter regeneration.
  (Diagnosis code is displayed on first establishment of code generation condition.)

[Diagnosis check timing]
- Fault diagnosis is performed only once during the driving cycle.

[Diagnostic requirement]
–

[Control effected by electronic control unit during fault]
- Diesel particulate filter regeneration is stopped (manual regeneration is feasible).

[Probable cause of trouble]
- Diesel particulate filter temperature control failure (caused by transient fault)
- If automatic regeneration is difficult due to long-time idling or very slow vehicle run.

[Recoverability]
- Recovered if signal becomes normal when starter switch is turned OFF to ON (power supply resumed to electronic control unit).
  (Warning lamp and diagnosis code is cleared simultaneously with recovery.)

[Fault diagnosis]
- Perform checks in the sequence of the following steps.

Step 1	Inspection items		Inspection by control data
	Maintenance item		Check if following diagnosis codes occur simultaneously. • P1412 “DPF Temp Abnormal1 (Auto)(Low)” • P1413 “DPF Temp Abnormal2 (Auto)(Low)” • P1414 “DPF Temp Abnormal3 (Auto)(High)”
	Inspection condition		Ensure that each sensor mounting condition is free of abnormalities.
	Requirements		Codes occur.
	Inspection result (Is the judging standard satisfied?)	YES	Inspect diagnosis code that is occurring.
		NO	Replacement of electronic control unit

[Fault code]
Diagnosis code: P1441/Flash code: 92
[Monitor]
For counter recording of diagnosis code P1416, P1417, P1418
[Fault (outline)]
High signal range check
[Diagnosis check]
- Temperature in diesel particulate filter during manual diesel particular filter regeneration is monitored through DPF temperature sensor 1.

[Code generation condition]
- Insufficient temperature rise occurred during manual filter regeneration.
  (Diagnosis code is displayed on first establishment of code generation condition.)

[Diagnosis check timing]
- Fault diagnosis is performed only once during the driving cycle.

[Diagnostic requirement]
–

[Control effected by electronic control unit during fault]
- Diesel particulate filter regeneration is stopped.

[Probable cause of trouble]
- Diesel particulate filter temperature control failure (caused by transient fault)

[Recoverability]
- Recovered if signal becomes normal when starter switch is turned OFF to ON (power supply resumed to electronic control unit).
  (Warning lamp and diagnosis code is cleared simultaneously with recovery.)

[Fault diagnosis]
- Perform checks in the sequence of the following steps.

Step 1	Inspection items		Inspection by control data
	Maintenance item		Check if following diagnosis codes occur simultaneously. • P1416 “DPF Temp Abnormal1 (Auto)(Low)” • P1417 “DPF Temp Abnormal2 (Auto)(Low)” • P1418 “DPF Temp Abnormal3 (Auto)(High)”
	Inspection condition		Ensure that each sensor mounting condition is free of abnormalities.
	Requirements		Codes occur.
	Inspection result (Is the judging standard satisfied?)	YES	Inspect diagnosis code that is occurring.
		NO	Replacement of electronic control unit

[Fault code]
Diagnosis code: P1632/Flash code: 73
[Monitor]
Abnormality in controller area network 2 communication
[Fault (outline)]
Message timeout
[Diagnosis check]
- Controller area network communication between engine electronic control unit and exhaust gas recirculation electronic drive unit is monitored for abnormality.

[Code generation condition]
- Engine electronic control unit fails to receive controller area network signal concerning throttle control from exhaust gas recirculation electronic drive unit within specified time (controller area network bus OFF).
  (Warning lamp is lit and diagnosis code is displayed on third establishment of code generation condition.)

[Diagnosis check timing]
- Fault diagnosis is continuously performed during the driving cycle.

[Diagnostic requirement]
–

[Control effected by electronic control unit during fault]
- Exhaust gas recirculation control is stopped.
- Throttle controls disabled
- Diesel particulate filter regeneration is stopped (manual regeneration is feasible).
- Particulate matter deposit computation is stopped.
- Related fault check is stopped.

[Probable cause of trouble]
- Open-circuit or short-circuit of harness between engine electronic control unit and exhaust gas recirculation electronic drive unit
- Malfunction of each connector
- Malfunction of engine electronic control unit
- Malfunction of exhaust gas recirculation electronic drive unit
- Malfunction of controller area network resistor

[Recoverability]
- Recovered if signal becomes normal when starter switch is turned OFF to ON (power supply resumed to electronic control unit).
  (Warning lamp is extinguished and diagnosis code is cleared at fourth display of diagnosis code after recovery.)

[Electronic Control Unit Connection Diagram]

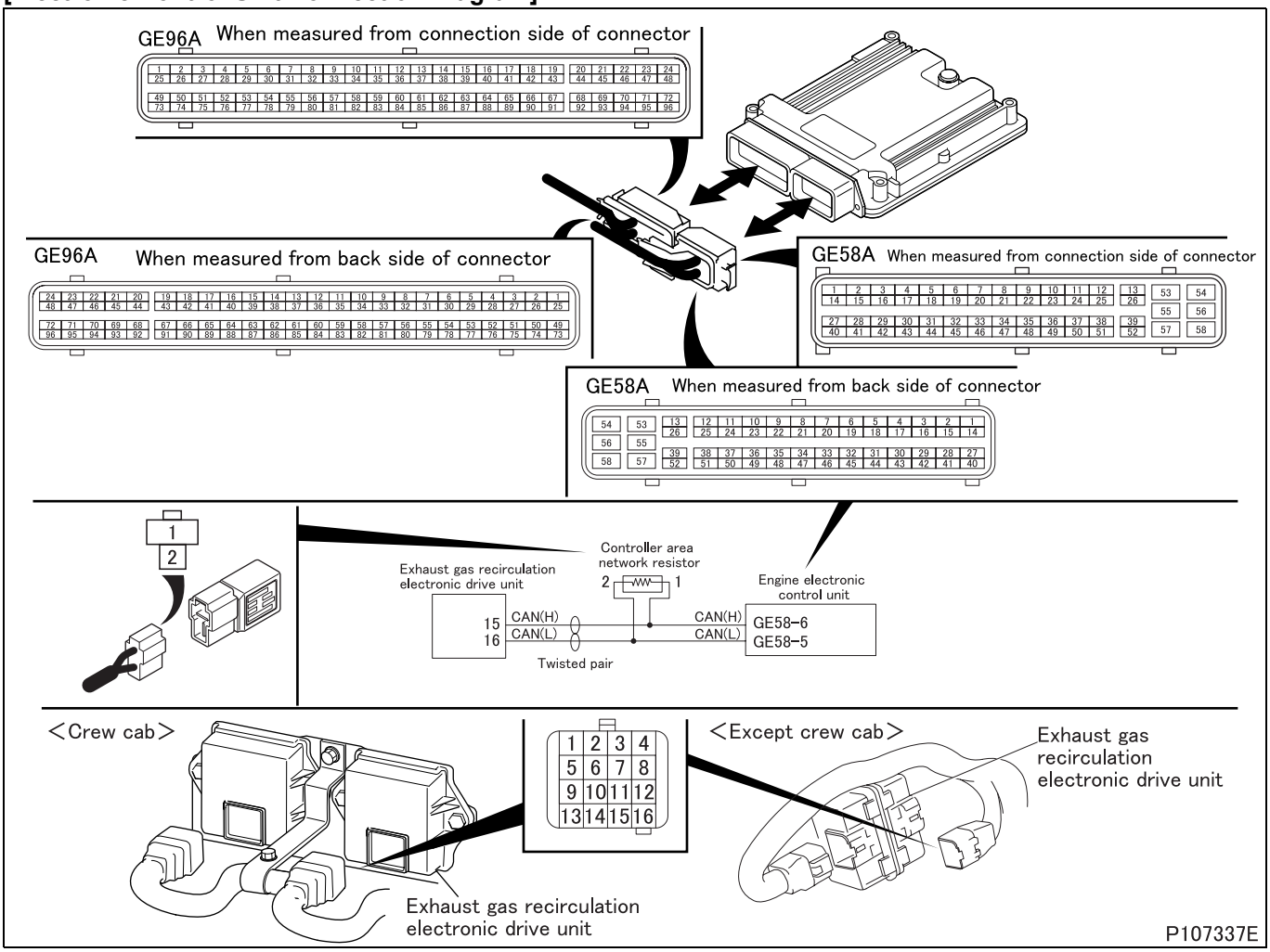

[Parts Identification and Location]

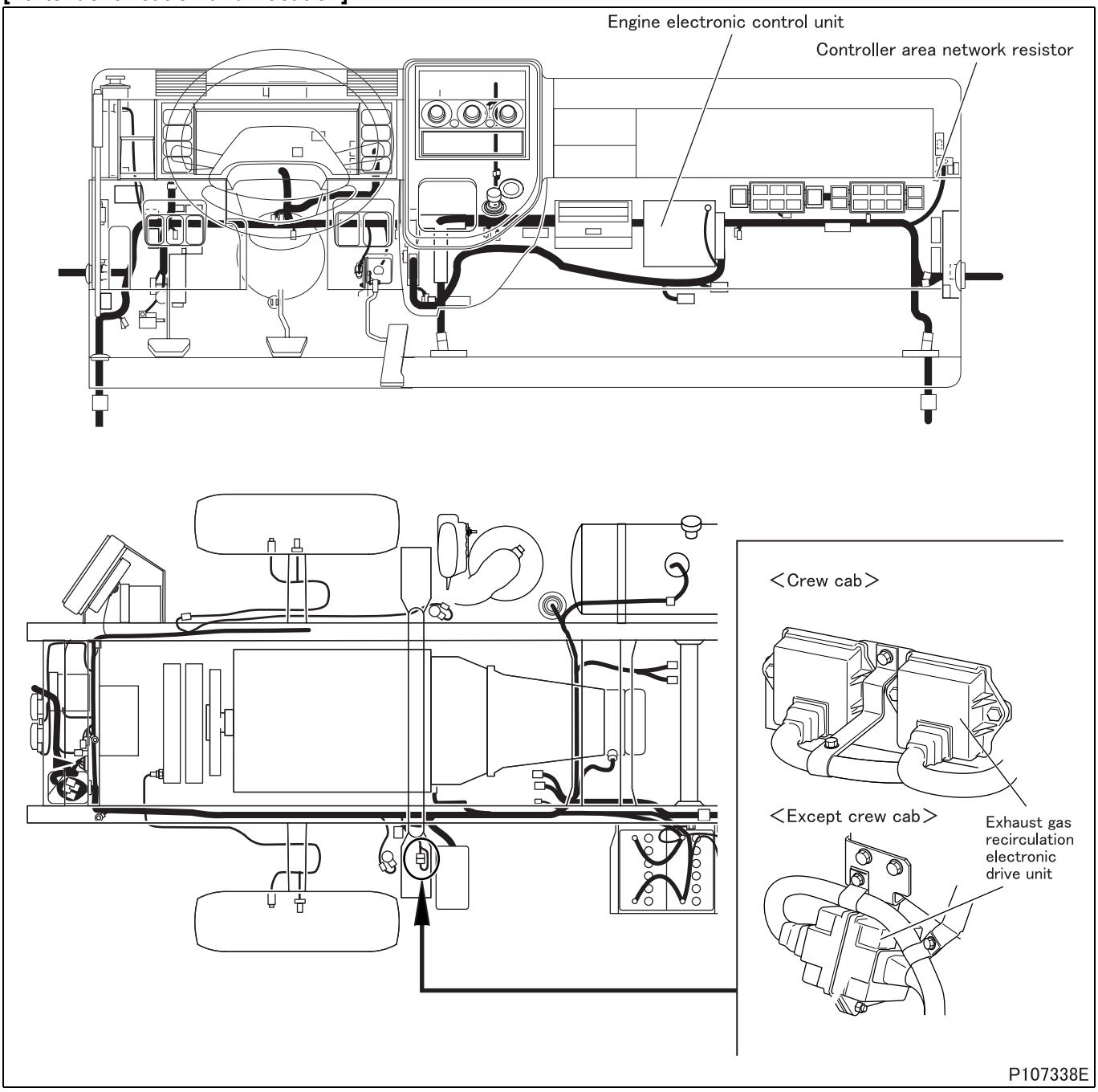

[Fault diagnosis]

- Perform checks in the sequence of the following steps.

Step 1	Inspection items		Inspection by engine electronic control unit connector
	Maintenance item		Measure value of resistance between engine electronic control unit connector (GE58A) terminal No. 5 and 6.
	Inspection condition		Disconnect each device from harness and measure from connection side of harness connector.
	Requirements		120 ± 6 Ω
	Inspection result (Is the judging standard satisfied?)	YES	Go to step 7.
		NO	Go to step 2.

Step 2	Inspection items		Inspection of controller area network resistor connector
	Maintenance item		Inspection of connector
	Inspection condition		–
	Requirements		• Connector is properly connected. • No trace of water entry is found. • No corrosion is found in terminal. • Connection to terminal is appropriate.
	Inspection result (Is the judging standard satisfied?)	YES	Go to step 3.
		NO	Modify connector.

Step 3	Inspection items		Inspection of controller area network resistor unit
	Maintenance item		Measure value of resistance between connector terminal No. 1 and 2.
	Inspection condition		Disconnect connector and measure resistor side.
	Requirements		120 ± 6 Ω
	Inspection result (Is the judging standard satisfied?)	YES	Go to step 4.
		NO	Replacement of controller area network resistor

<Step 3 inspection diagram>

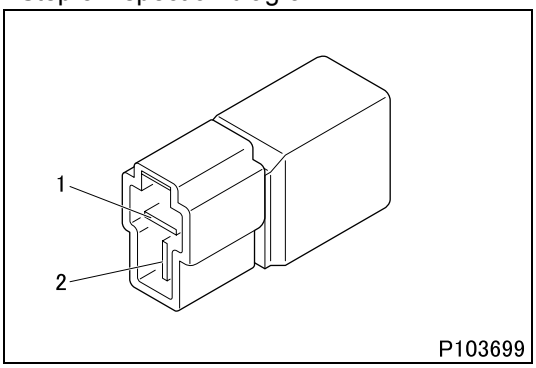

Step 4	Inspection items		Inspection of harness between engine electronic control unit and controller area network resistor (HIGH)
	Maintenance item		Check circuit between controller area network resistor connector terminal No. 1 and engine electronic control unit connector (GE58A) terminal No. 6
	Inspection condition		Disconnect each device from harness and measure from connection side of harness connector.
	Requirements		There is continuity.
	Inspection result (Is the judging standard satisfied?)	YES	Go to step 5.
		NO	Modify harness.

Step 5	Inspection items		Inspection of harness between engine electronic control unit and controller area network resistor (LOW)
	Maintenance item		Check circuit between controller area network resistor connector terminal No. 2 and engine electronic control unit connector (GE58A) terminal No. 5
	Inspection condition		Disconnect each device from harness and measure from connection side of harness connector.
	Requirements		There is continuity.
	Inspection result (Is the judging standard satisfied?)	YES	Go to step 6.
		NO	Modify harness.

Step 6	Inspection items		Inspection of engine electronic control unit connector
	Maintenance item		Inspection of connector
	Inspection condition		–
	Requirements		• Connector is properly connected. • No trace of water entry is found. • No corrosion is found in terminal. • Connection to terminal is appropriate.
	Inspection result (Is the judging standard satisfied?)	YES	Go to step 10.
		NO	Modify connector.

Step 7	Inspection items		Inspection of harness between engine electronic control unit and controller area network resistor (HIGH)
	Maintenance item		Check circuit between controller area network resistor connector terminal No. 1 and electronic drive unit connector terminal No. 15
	Inspection condition		Disconnect each device from harness and measure from connection side of harness connector.
	Requirements		There is continuity.
	Inspection result (Is the judging standard satisfied?)	YES	Go to step 8.
		NO	Modify harness.

Step 8	Inspection items		Inspection of harness between engine electronic drive unit and controller area network resistor (LOW)
	Maintenance item		Check circuit between controller area network resistor connector terminal No. 2 and electronic drive unit connector terminal No. 16
	Inspection condition		Disconnect each device from harness and measure from connection side of harness connector.
	Requirements		There is continuity.
	Inspection result (Is the judging standard satisfied?)	YES	Go to step 9.
		NO	Modify harness.

Step 9	Inspection items		Inspection of electronic drive unit connector
	Maintenance item		Inspection of connector
	Inspection condition		–
	Requirements		• Connector is properly connected. • No trace of water entry is found. • No corrosion is found in terminal. • Connection to terminal is appropriate.
	Inspection result (Is the judging standard satisfied?)	YES	Replace the engine electronic control unit as well if this diagnosis code occurs after the replacement of electronic drive unit.
		NO	Modify connector.

[Fault code]
Diagnosis code: P1635/Flash code: 74
[Monitor]
Abnormality in controller area network 2 communication
[Fault (outline)]
Message timeout
[Diagnosis check]
- Controller area network communication between engine electronic control unit and throttle electronic drive unit is monitored for abnormality.

[Code generation condition]
- Engine electronic control unit fails to receive controller area network signal concerning throttle control from throttle electronic drive unit within specified time (controller area network bus OFF).
  (Warning lamp is lit and diagnosis code is displayed on third establishment of code generation condition.)

[Diagnosis check timing]
- Fault diagnosis is continuously performed during the driving cycle.

[Diagnostic requirement]
–

[Control effected by electronic control unit during fault]
- Exhaust gas recirculation control is stopped.
- Throttle controls disabled
- Diesel particulate filter regeneration is stopped.
- Particulate matter deposit computation is stopped.
- Intake throttle actuator test is inhibited.
- Related fault check is stopped.

[Probable cause of trouble]
- Open-circuit or short-circuit of harness between engine electronic control unit and throttle electronic drive unit
- Malfunction of each connector
- Malfunction of engine electronic control unit
- Malfunction of throttle electronic drive unit
- Malfunction of controller area network resistor

[Recoverability]
- Recovered if signal becomes normal when starter switch is turned OFF to ON (power supply resumed to electronic control unit).
  (Warning lamp is extinguished and diagnosis code is cleared at fourth display of diagnosis code after recovery.)

[Electronic Control Unit Connection Diagram]

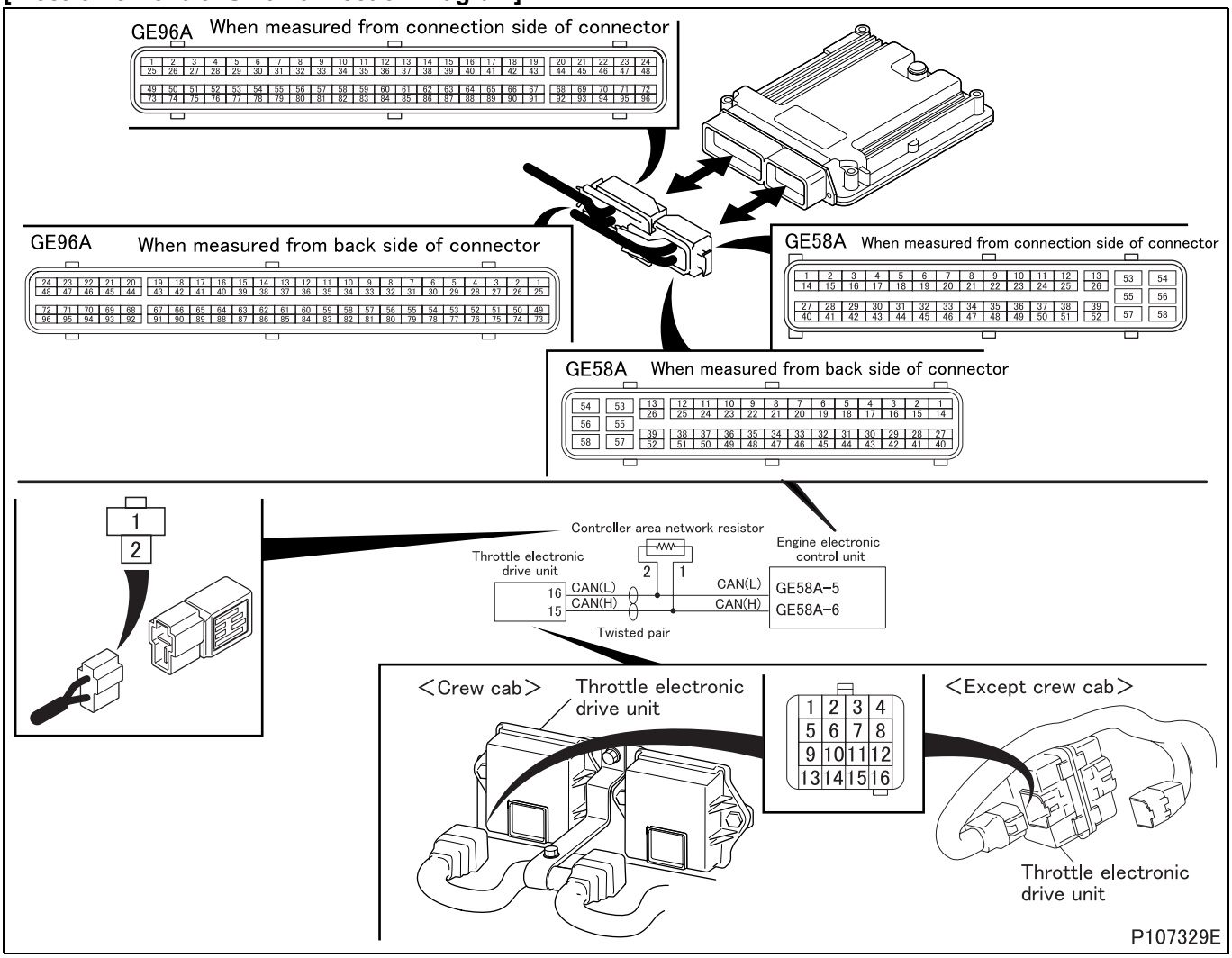

[Parts Identification and Location]

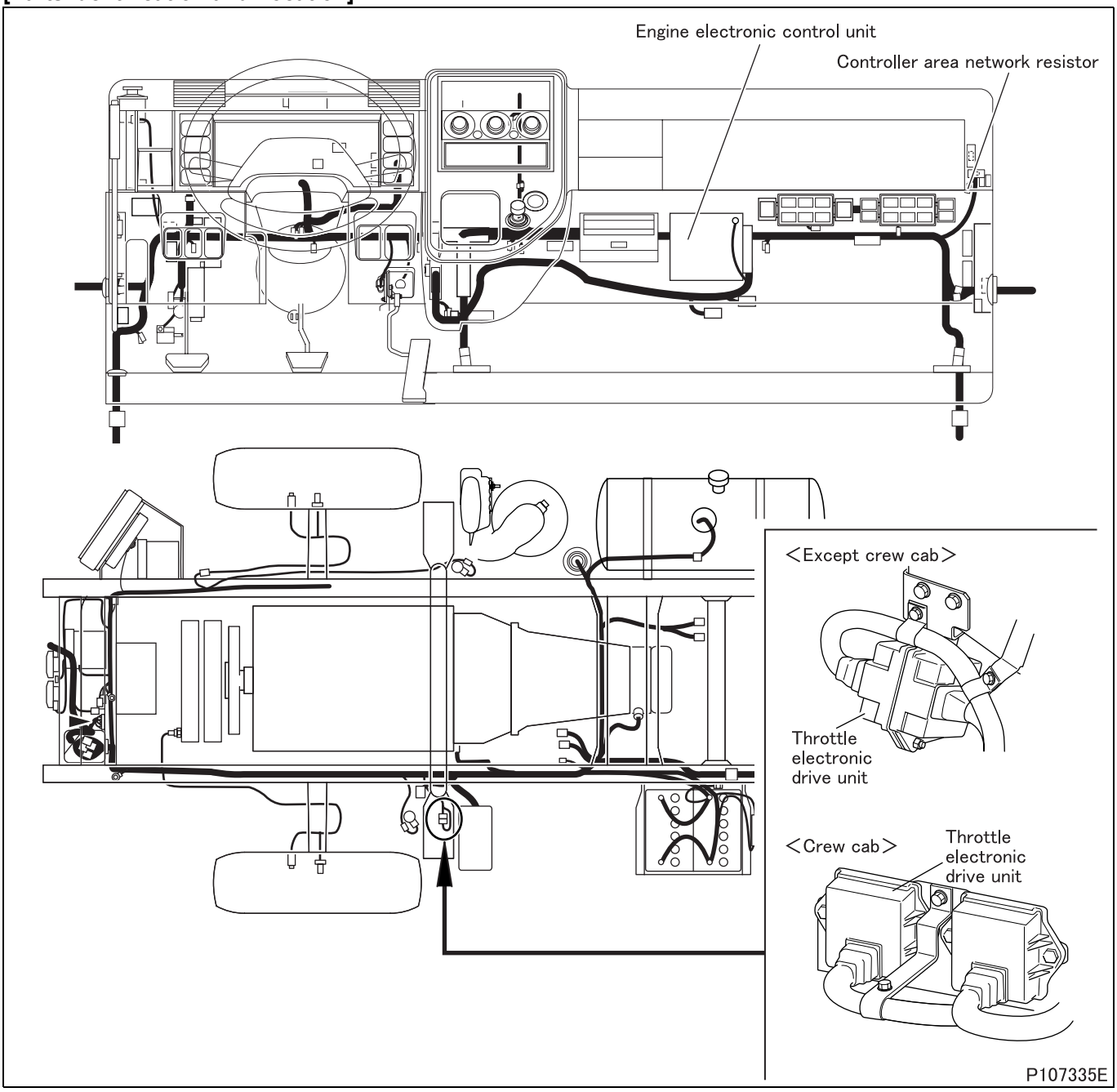

[Fault diagnosis]

- Perform checks in the sequence of the following steps.

Step 1	Inspection items		Inspection by engine electronic control unit connector
	Maintenance item		Measure value of resistance between engine electronic control unit connector (GE58A) terminal No. 5 and 6.
	Inspection condition		Disconnect each device from harness and measure from connection side of harness connector.
	Requirements		120 ± 6 Ω
	Inspection result (Is the judging standard satisfied?)	YES	Go to step 7.
		NO	Go to step 2.

Step 2	Inspection items		Inspection of controller area network resistor connector
	Maintenance item		Inspection of connector
	Inspection condition		–
	Requirements		• Connector is properly connected. • No trace of water entry is found. • No corrosion is found in terminal. • Connection to terminal is appropriate.
	Inspection result (Is the judging standard satisfied?)	YES	Go to step 3.
		NO	Modify connector.

Step 3	Inspection items		Inspection of controller area network resistor unit
	Maintenance item		Measure value of resistance between connector terminal No. 1 and 2.
	Inspection condition		Disconnect connector and measure resistor side.
	Requirements		120 ± 6 Ω
	Inspection result (Is the judging standard satisfied?)	YES	Go to step 4.
		NO	Replacement of controller area network resistor

<Step 3 inspection diagram>

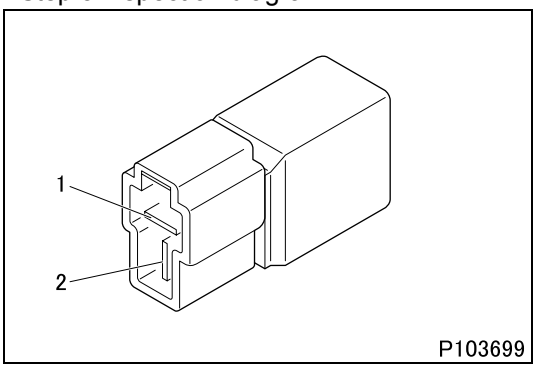

Step 4	Inspection items		Inspection of harness between engine electronic control unit and controller area network resistor (HIGH)
	Maintenance item		Check circuit between controller area network resistor connector terminal No. 1 and engine electronic control unit connector (GE58A) terminal No. 6
	Inspection condition		Disconnect each device from harness and measure from connection side of harness connector.
	Requirements		There is continuity.
	Inspection result (Is the judging standard satisfied?)	YES	Go to step 5.
		NO	Modify harness.

Step 5	Inspection items		Inspection of harness between engine electronic control unit and controller area network resistor (LOW)
	Maintenance item		Check circuit between controller area network resistor connector terminal No. 2 and engine electronic control unit connector (GE58A) terminal No. 5
	Inspection condition		Disconnect each device from harness and measure from connection side of harness connector.
	Requirements		There is continuity.
	Inspection result (Is the judging standard satisfied?)	YES	Go to step 6.
		NO	Modify harness.

Step 6	Inspection items		Inspection of engine electronic control unit connector
	Maintenance item		Inspection of connector
	Inspection condition		–
	Requirements		• Connector is properly connected. • No trace of water entry is found. • No corrosion is found in terminal. • Connection to terminal is appropriate.
	Inspection result (Is the judging standard satisfied?)	YES	Go to step 10.
		NO	Modify connector.

Step 7	Inspection items		Inspection of harness between engine electronic control unit and controller area network resistor (HIGH)
	Maintenance item		Check circuit between controller area network resistor connector terminal No. 1 and electronic drive unit connector terminal No. 15
	Inspection condition		Disconnect each device from harness and measure from connection side of harness connector.
	Requirements		There is continuity.
	Inspection result (Is the judging standard satisfied?)	YES	Go to step 8.
		NO	Modify harness.

Step 8	Inspection items		Inspection of harness between engine electronic drive unit and controller area network resistor (LOW)
	Maintenance item		Check circuit between controller area network resistor connector terminal No. 2 and electronic drive unit connector terminal No. 16
	Inspection condition		Disconnect each device from harness and measure from connection side of harness connector.
	Requirements		There is continuity.
	Inspection result (Is the judging standard satisfied?)	YES	Go to step 9.
		NO	Modify harness.

Step 9	Inspection items		Inspection of electronic drive unit connector
	Maintenance item		Inspection of connector
	Inspection condition		–
	Requirements		• Connector is properly connected. • No trace of water entry is found. • No corrosion is found in terminal. • Connection to terminal is appropriate.
	Inspection result (Is the judging standard satisfied?)	YES	Replace the engine electronic control unit as well if this diagnosis code occurs after the replacement of electronic drive unit.
		NO	Modify connector.

[Fault code]
Diagnosis code: P1640/Flash code: 75
[Monitor]
Abnormality in controller area network 2 communication
[Fault (outline)]
Time out
[Diagnosis check]
- Controller area network communication between engine electronic control unit and turbocharger electronic drive unit is monitored for abnormality.

[Code generation condition]
- Engine electronic control unit fails to receive controller area network signal concerning turbocharger control from turbocharger electronic drive unit within specified time (controller area network bus OFF).
  (Warning lamp is lit and diagnosis code is displayed on third establishment of code generation condition.)

[Diagnosis check timing]
- Fault diagnosis is continuously performed during the driving cycle.

[Diagnostic requirement]
–

[Control effected by electronic control unit during fault]
- Exhaust gas recirculation control is stopped.
- Throttle controls disabled
- Diesel particulate filter regeneration is stopped.
- Related fault check is stopped.

[Probable cause of trouble]
- Open-circuit or short-circuit of harness between engine electronic control unit and turbocharger electronic drive unit
- Malfunction of each connector
- Malfunction of engine electronic control unit
- Malfunction of turbocharger electronic drive unit
- Malfunction of controller area network resistor

[Recoverability]
- Recovered if signal becomes normal when starter switch is turned OFF to ON (power supply resumed to electronic control unit).
  (Warning lamp is extinguished and diagnosis code is cleared at fourth display of diagnosis code after recovery.)

[Electronic Control Unit Connection Diagram]

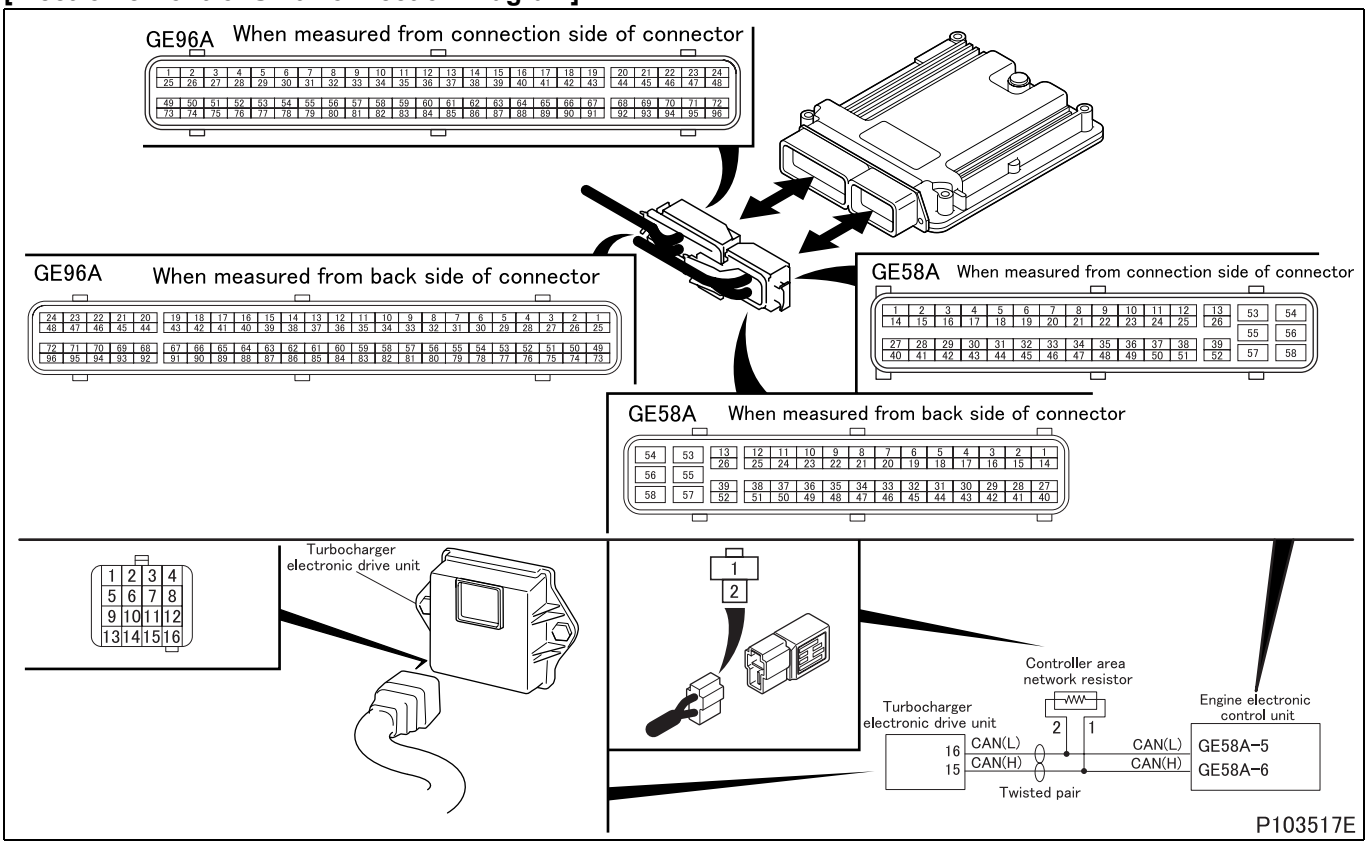

[Parts Identification and Location]

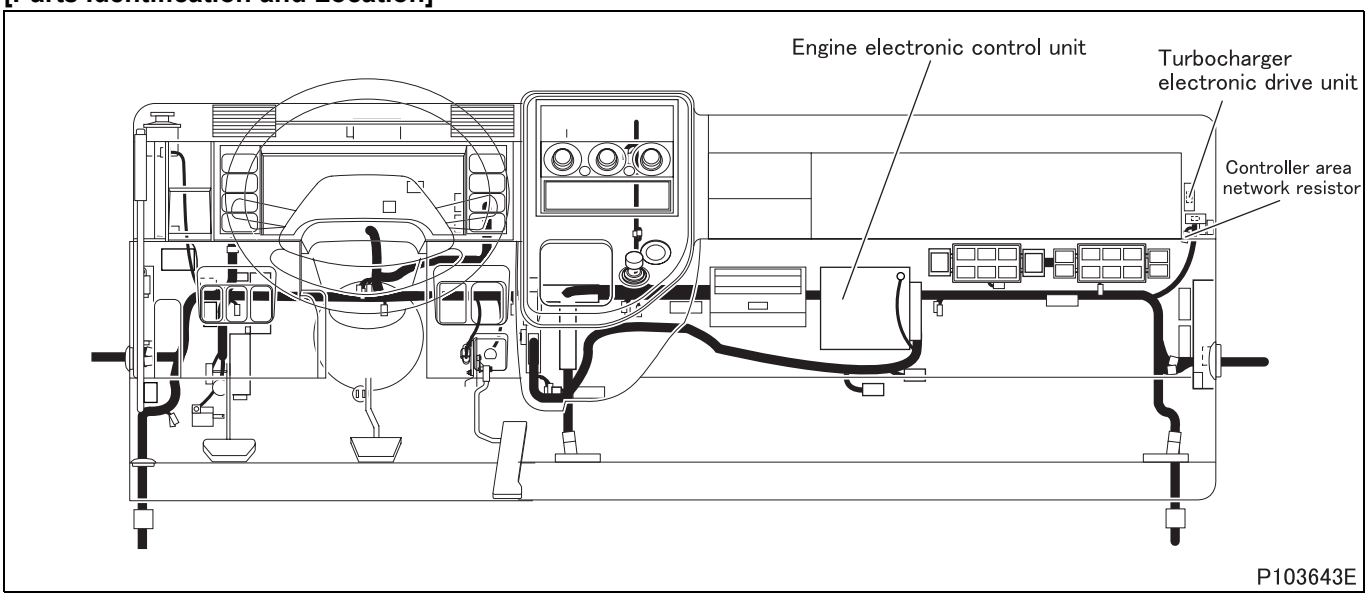

[Fault diagnosis]

- Perform checks in the sequence of the following steps.

Step 1	Inspection items		Inspection by engine electronic control unit connector
	Maintenance item		Measure value of resistance between engine electronic control unit connector (GE58A) terminal No. 5 and 6.
	Inspection condition		Disconnect each device from harness and measure from connection side of harness connector.
	Requirements		120 ± 6 Ω
	Inspection result (Is the judging standard satisfied?)	YES	Go to step 7.
		NO	Go to step 2.

Step 2	Inspection items		Inspection of controller area network resistor connector
	Maintenance item		Inspection of connector
	Inspection condition		–
	Requirements		• Connector is properly connected. • No trace of water entry is found. • No corrosion is found in terminal. • Connection to terminal is appropriate.
	Inspection result (Is the judging standard satisfied?)	YES	Go to step 3.
		NO	Modify connector.

Step 3	Inspection items		Inspection of controller area network resistor unit
	Maintenance item		Measure value of resistance between connector terminal No. 1 and 2.
	Inspection condition		Disconnect connector and measure resistor side.
	Requirements		120 ± 6 Ω
	Inspection result (Is the judging standard satisfied?)	YES	Go to step 4.
		NO	Replacement of controller area network resistor

<Step 3 inspection diagram>

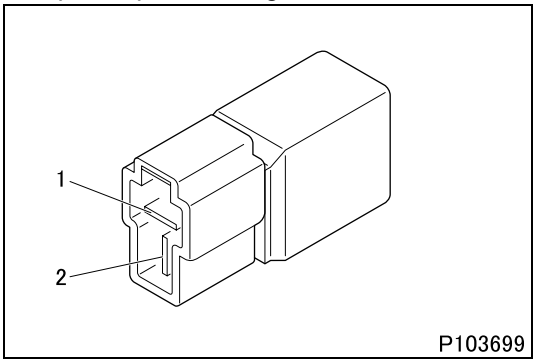

Step 4	Inspection items		Inspection of harness between engine electronic control unit and controller area network resistor (HIGH)
	Maintenance item		Check circuit between controller area network resistor connector terminal No. 1 and engine electronic control unit connector (GE58A) terminal No. 6
	Inspection condition		Disconnect each device from harness and measure from connection side of harness connector.
	Requirements		There is continuity.
	Inspection result (Is the judging standard satisfied?)	YES	Go to step 5.
		NO	Modify harness.

Step 5	Inspection items		Inspection of harness between engine electronic control unit and controller area network resistor (LOW)
	Maintenance item		Check circuit between controller area network resistor connector terminal No. 2 and engine electronic control unit connector (GE58A) terminal No. 5
	Inspection condition		Disconnect each device from harness and measure from connection side of harness connector.
	Requirements		There is continuity.
	Inspection result (Is the judging standard satisfied?)	YES	Go to step 6.
		NO	Modify harness.

Step 6	Inspection items		Inspection of engine electronic control unit connector
	Maintenance item		Inspection of connector
	Inspection condition		–
	Requirements		• Connector is properly connected. • No trace of water entry is found. • No corrosion is found in terminal. • Connection to terminal is appropriate.
	Inspection result (Is the judging standard satisfied?)	YES	Go to step 10.
		NO	Modify connector.

Step 7	Inspection items		Inspection of harness between engine electronic control unit and controller area network resistor (HIGH)
	Maintenance item		Check circuit between controller area network resistor connector terminal No. 1 and electronic drive unit connector terminal No. 15
	Inspection condition		Disconnect each device from harness and measure from connection side of harness connector.
	Requirements		There is continuity.
	Inspection result (Is the judging standard satisfied?)	YES	Go to step 8.
		NO	Modify harness.

Step 8	Inspection items		Inspection of harness between engine electronic drive unit and controller area network resistor (LOW)
	Maintenance item		Check circuit between controller area network resistor connector terminal No. 2 and electronic drive unit connector terminal No. 16
	Inspection condition		Disconnect each device from harness and measure from connection side of harness connector.
	Requirements		There is continuity.
	Inspection result (Is the judging standard satisfied?)	YES	Go to step 9.
		NO	Modify harness.

Step 9	Inspection items		Inspection of electronic drive unit connector
	Maintenance item		Inspection of connector
	Inspection condition		–
	Requirements		• Connector is properly connected. • No trace of water entry is found. • No corrosion is found in terminal. • Connection to terminal is appropriate.
	Inspection result (Is the judging standard satisfied?)	YES	Replace the engine electronic control unit as well if this diagnosis code occurs after the replacement of electronic drive unit.
		NO	Modify connector.

[Fault code]
Diagnosis code: P1660/Flash code: 29
[Monitor]
Failure of diesel particulate filter indicator lamp
[Fault (outline)]
- Short circuit battery
- Short circuit ground
- Open circuit
- Overload

[Diagnosis check]
- Diesel particulate filter indicator lamp circuit is monitored for fault.

[Code generation condition]
- Diesel particulate filter indicator lamp circuit remains open, shorted or overcurrent as detected for 0.2 second. (Warning lamp is lit and diagnosis code is displayed on first establishment of code generation condition.)

[Diagnosis check timing]
- Fault diagnosis is performed each time when the control is initiated.
- Fault diagnosis is performed each time when the control is halted.

[Diagnostic requirement]
–

[Control effected by electronic control unit during fault]
- Effects no special control.

[Probable cause of trouble]
- Open-circuit or short-circuit of harness between electronic control unit and diesel particulate filter indicator lamp
- Malfunction of each connector
- Malfunction of diesel particulate filter indicator lamp
- Malfunction of electronic control unit

[Recoverability]
- Recovered if signal becomes normal with starter switch in ON position. (Warning lamp is extinguished and diagnosis code is cleared at fourth display of diagnosis code after recovery.)

[Electronic Control Unit Connection Diagram]

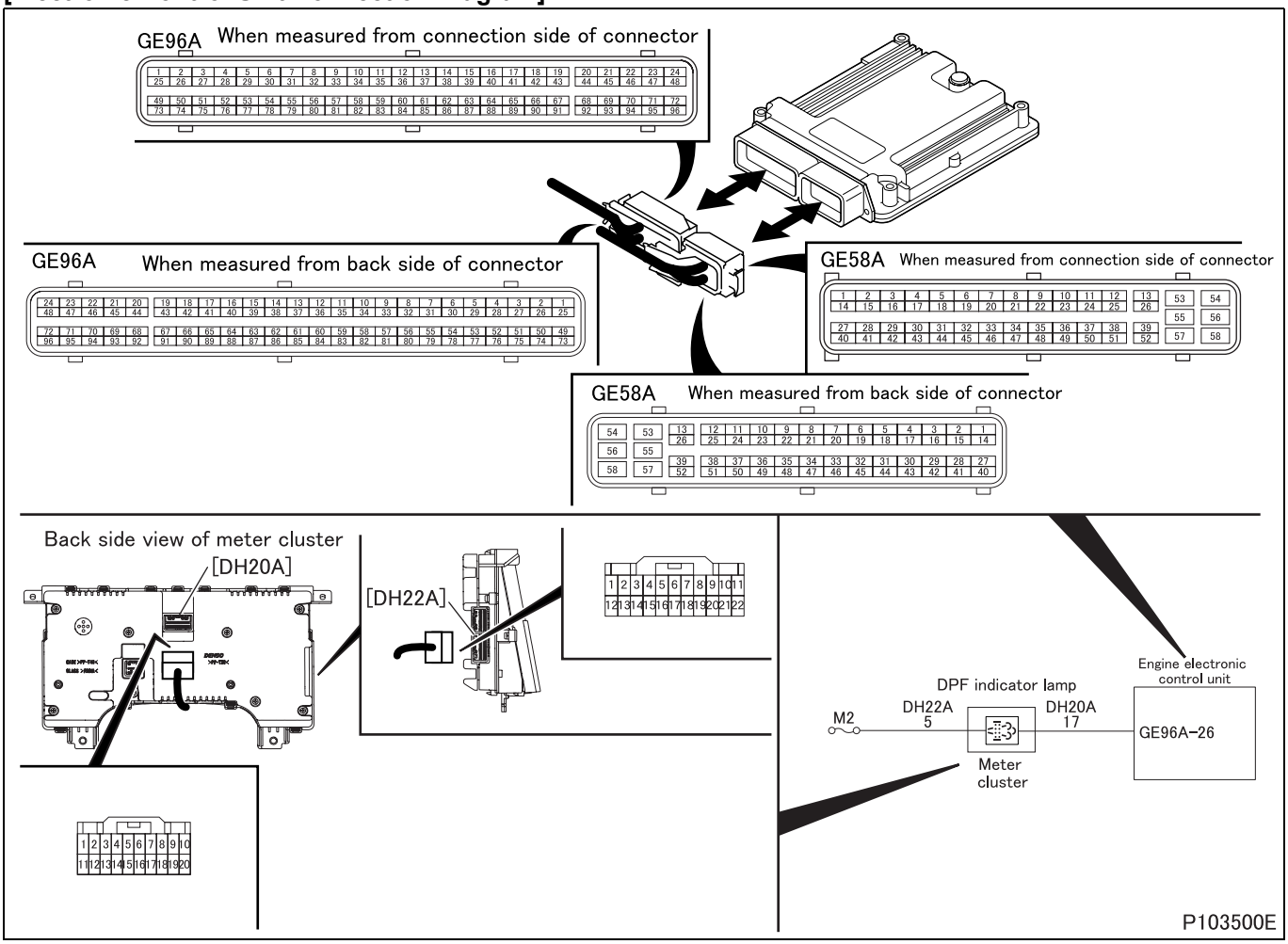

[Parts Identification and Location]

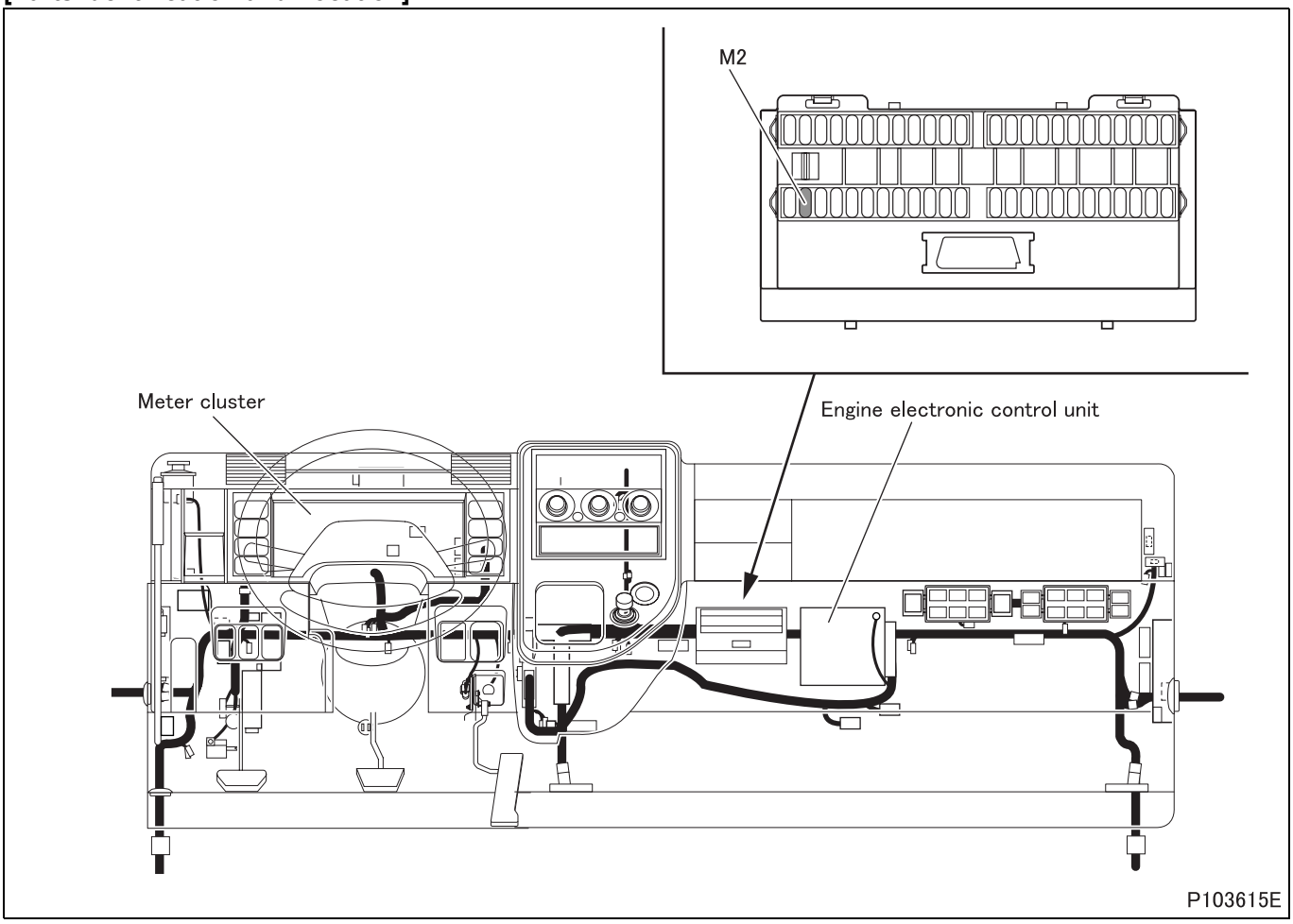

[Fault diagnosis]

- Perform checks in the sequence of the following steps.

Step 1	Inspection items		Inspection by control data
	Maintenance item		Measure item No. B8 “DPF Indicator Lamp” of Service Data.
	Inspection condition		Perform Multi-Use Tester actuator test item No. A6 “DPF Lamp”.
	Requirements		Diesel particulate filter indicator lamp lit (automatic reset after 15 seconds).
	Inspection result (Is the judging standard satisfied?)	YES	Go to transient fault (See Gr00.).
		NO	Go to step 2.

Step 2	Inspection items		Inspection by electronic control unit connector
	Maintenance item		Ground connector (GE96A) terminal No. 26.
	Inspection condition		It wires for the ground harness from the other side of the connector.
	Requirements		Diesel particulate filter indicator lamp illuminates
	Inspection result (Is the judging standard satisfied?)	YES	Go to step 3.
		NO	Go to step 4.

Step 3	Inspection items		Inspection of electronic control unit connector
	Maintenance item		Inspection of connector
	Inspection condition		–
	Requirements		• Connector is properly connected. • No trace of water entry is found. • No corrosion is found in terminal. • Connection to terminal is appropriate.
	Inspection result (Is the judging standard satisfied?)	YES	Go to step 4.
		NO	Modify connector.

Step 4	Inspection items		Inspection of harness between fuse and meter cluster
	Maintenance item		Check circuit between fuse M2 and meter cluster connector (DH22A) terminal No. 5.
	Inspection condition		Disconnect each device from harness and measure from connection side of harness connector.
	Requirements		There is continuity.
	Inspection result (Is the judging standard satisfied?)	YES	Go to step 5.
		NO	Modify harness.

Step 5	Inspection items		Inspection of harness between electronic control unit and meter cluster
	Maintenance item		Check circuit between electronic control unit connector (GE96A) terminal No. 26 and meter cluster connector (DH20A) terminal No. 10.
	Inspection condition		Disconnect each device from harness and measure from connection side of harness connector.
	Requirements		There is continuity.
	Inspection result (Is the judging standard satisfied?)	YES	Go to step 6.
		NO	Modify harness.

Step 6	Inspection items		Inspection of meter cluster
	Maintenance item		Inspection of connector
	Inspection condition		–
	Requirements		• Connector is properly connected. • No trace of water entry is found. • No corrosion is found in terminal. • Connection to terminal is appropriate.
	Inspection result (Is the judging standard satisfied?)	YES	Replacement of meter cluster or lamp
		NO	Modify connector.

[Fault code]
Diagnosis code: P2002/Flash code: 92
[Monitor]
Diesel particulate filter clogged
[Fault (outline)]
Efficiency below threshold (leaking diesel particulate filter)
[Diagnosis check]
- Ceramic filter is monitored for failure through DPF pressure sensor (DIFF) during operation of diesel particulate filter regeneration function.

[Code generation condition]
- Difference between maximum pressure calculated by electronic control unit and actual diesel particulate filter pressure remains out of control map for 10 seconds.
  (Warning lamp is lit and diagnosis code is displayed on third establishment of code generation condition.)

[Diagnosis check timing]
- Fault diagnosis is performed only once during the driving cycle.

[Diagnostic requirement]
- Engine operating mode: normal (engine in operation)
- Pressure adjustment in DPF pressure sensor (DIFF):
  Has been carried out this drive cycle ; for drift correction, the following conditions exist for >5s :
  - Engine speed: less than 875 rpm
  - Fuel injection quantity: below 25 mg/cyc
  - Exhaust flow rate: less than 90 m^3/h
  - Exhaust gas recirculation valve position: more than 8 mm {0.3 in.}
- Exhaust volume-flow rate: 500 to 900 m^3/h
- Diesel particulate filter inlet temperature: 200 to 400°C {392 to 752°F}
- Water temperature: 65 to 110°C {149 to 230°F}
- Atmospheric pressure: more than 750 mbar {10.87 psi}
- Approximate environment atmospheric temperature: –7 to 50°C {19 to 122°F}
- Frequency of diesel particulate filter regeneration control: less than 3 times (discontinued after start of diesel particulate filter regeneration control)
- Soot deposit: 15 to 30 g {0.53 to 1.06 oz}
- Diesel particulate filter regeneration control: not effected
- Controller area network communication of exhaust gas recirculation electronic drive unit: in order
- DPF pressure sensor (DIFF): in order
- Air flow sensor: in order
- Atmospheric pressure sensor: in order
- Water temperature sensor: in order
- Intake air temperature sensor: in order
- Catalytic temperature sensor: in order
- DPF temperature sensor 1: in order
- Sensor 5 V power supply: in order
- Battery voltage: in order
- MPROP (rail pressure control valve): in order

[Control effected by electronic control unit during fault]
Electronic control unit differs in the way of control by the engine model.
<Except FE83>
- Engine torque is limited.
- Exhaust gas recirculation control is stopped.
- Throttle controls disabled
- Diesel particulate filter regeneration is stopped.
- Turbocharger actuator test is inhibited.
- Related fault check is stopped.

<FE83>
- Particulate matter deposit computation is stopped.
- Related fault check is stopped.

[Probable cause of trouble]
- Failure of diesel particulate filter indicator lamp
- Failure of diesel particulate filter cleaning switch
- Manual diesel particulate filter regeneration is not performed.
- Excessive smoke emission (due to malfunction of engine proper, common rail or exhaust gas recirculation system)
- Malfunction of air flow sensor
- Malfunction of DPF absolute pressure sensor and DPF pressure sensor (DIFF)
- Malfunction of diesel particulate filter

[Recoverability]
- Recovered if signal becomes normal when starter switch is turned OFF to ON (power supply resumed to electronic control unit).
  (Warning lamp is extinguished and diagnosis code is cleared at fourth display of diagnosis code after recovery.)

[Electronic Control Unit Connection Diagram]

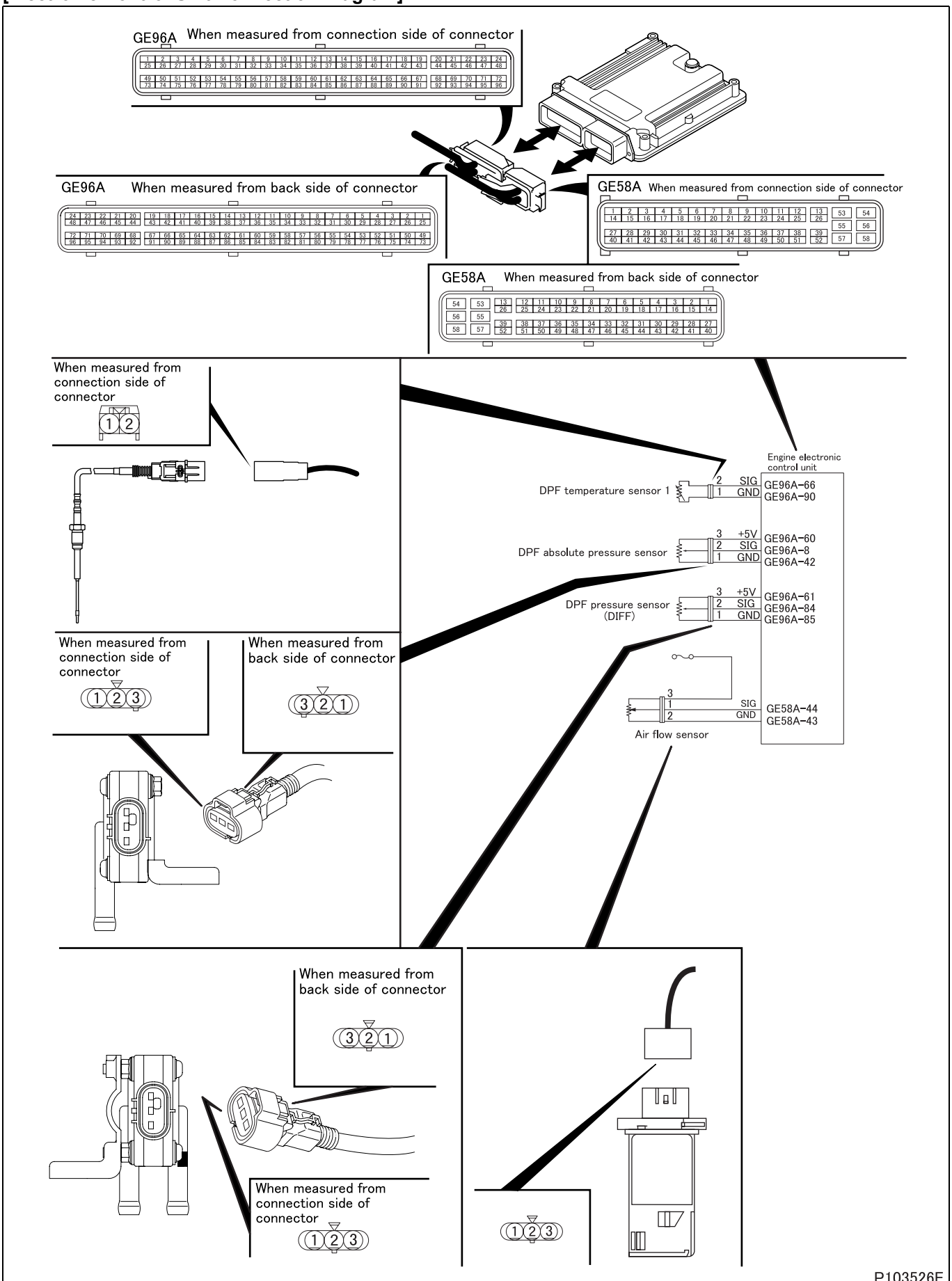

P103526E

[Parts Identification and Location]

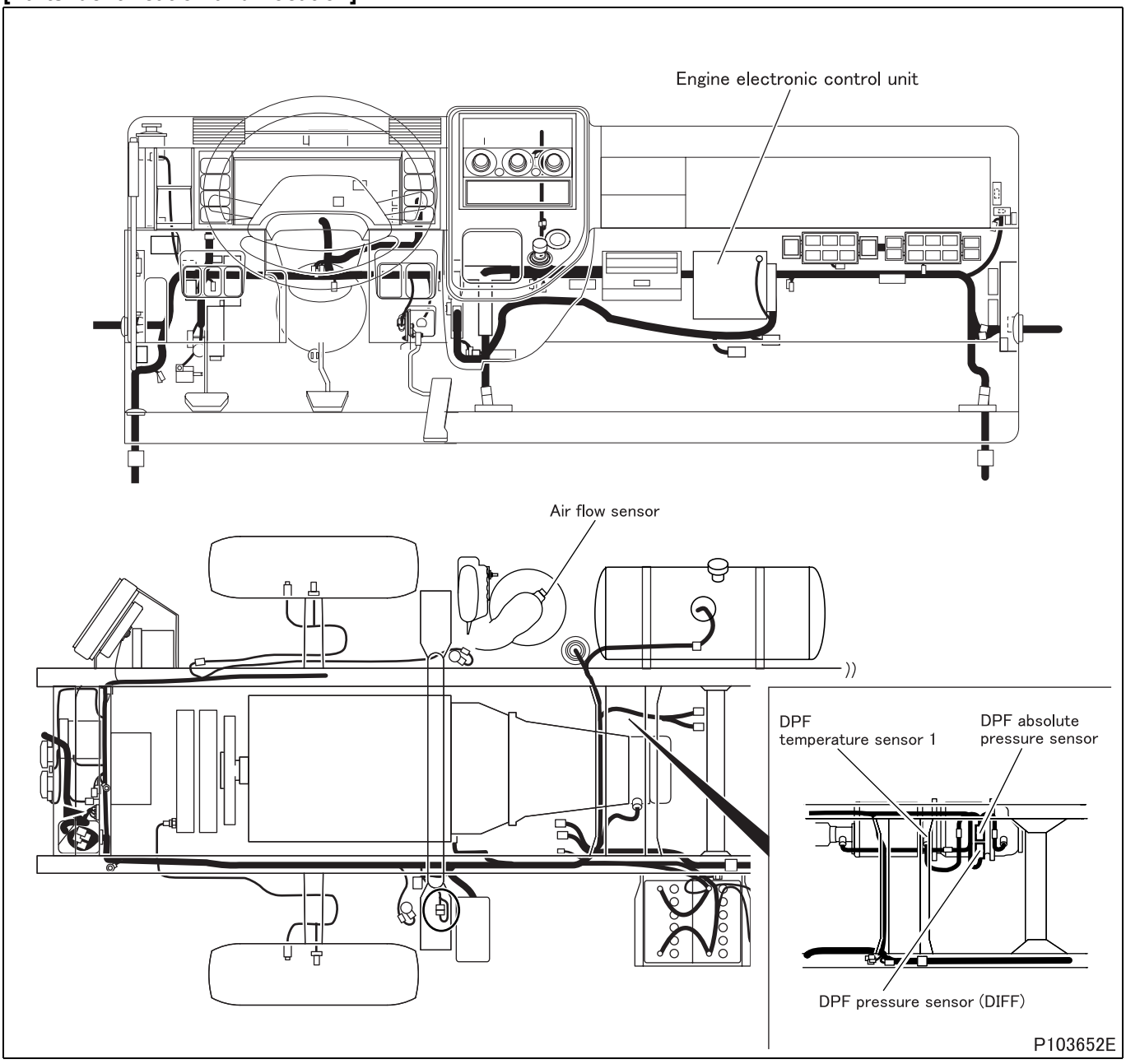

[Fault diagnosis]

- Perform checks in the sequence of the following steps.

Step 1	Inspection items		Inspection of oil level
	Maintenance item		Inspection of engine oil level
	Inspection condition		Engine stopped
	Requirements		Oil level for inspection is not exceeded.
	Inspection result (Is the judging standard satisfied?)	YES	Go to step 2.
		NO	After replacement of oil, go to step 2

<Step 1 inspection diagram>

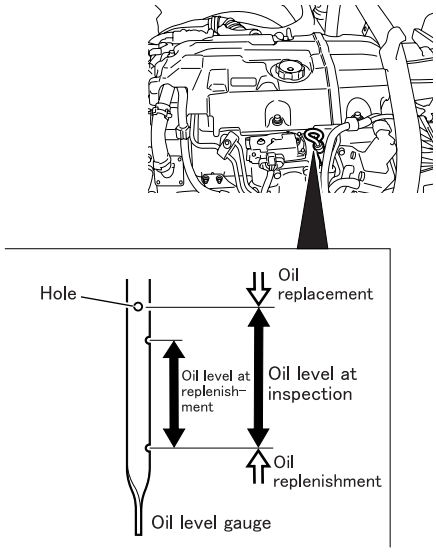

P103677E

Step 2	Inspection items		Inspection by manual diesel particulate filter regeneration
	Maintenance item		Perform Multi-Use Tester actuator test item No. A5 “DPF Regeneration (Manual)”, and clean ceramic diesel particulate filter.
	Inspection condition		• Vehicle: stationary (vehicle speed 0 km/h {0 MPH}) • Starter switch: ON (engine started) • Engine: idling • Place the transmission in neutral. (place the automatic transmission in P range) • Parking brake: vehicle parked (parking brake switch: ON) • After engine warm-up
	Requirements		This diagnosis code does not occur again.
	Inspection result (Is the judging standard satisfied?)	YES	End of inspection
		NO	Go to step 3.

Step 3	Inspection items		Unit inspection of diesel particulate filter
	Maintenance item		Check the exhaust passage inside the diesel particulate filter for adhesion of soot in large quantity.
	Inspection condition		Remove diesel particulate filter.
	Requirements		No soot is deposited.
	Inspection result (Is the judging standard satisfied?)	YES	Go to step 4.
		NO	After replacement of ceramic filter, perform resetting the DPF-related information.

<Step 3 inspection diagram>

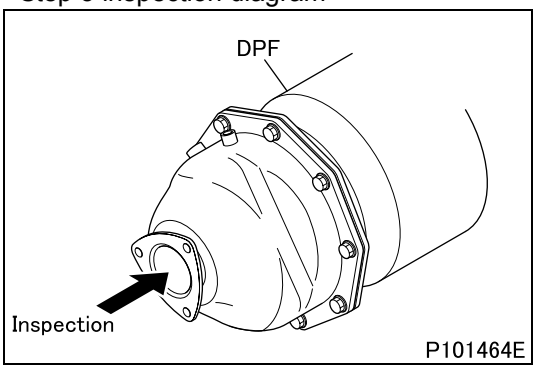

Step 4	Inspection items		Diesel Particulate Filter Unit Inspection for Clogging and Cleaning the Diesel Particulate Filter Unit
	Maintenance item		See Gr15 “Diesel Particulate Filter Unit Inspection for Clogging and Cleaning the Diesel Particulate Filter Unit”
	Inspection condition		Perform the following preparatory works. • Place the transmission in neutral. (place the automatic transmission in P range) • Turn the steering wheel in neutral position and securely apply the parking brake. • Turn off air conditioner not to increase the engine speed. • Check diagnosis code of each electronic control system. If any fault exists, rectify it. • Resetting the DPF-related information (perform “History reset” of Multi-Use Tester) (See Gr15 “Resetting the DPF-related information”.) • Warm up the engine until the engine coolant has been heated to more than 70°C {158°F}. (verify from Service Data “Engine Coolant Temperature” or “31: Water Temperature”)
	Requirements		This diagnosis code does not occur again.
	Inspection result (Is the judging standard satisfied?)	YES	End of inspection
		NO	Go to step 5.

Step 5	Inspection items		Inspection by control data
	Maintenance item		Measure item No. B8 “DPF Indicator Lamp” of Service Data.
	Inspection condition		Perform Multi-Use Tester actuator test item No. A6 “DPF Lamp”.
	Requirements		Diesel particulate filter indicator lamp illuminates (automatic reset after 15 seconds)
	Inspection result (Is the judging standard satisfied?)	YES	Go to step 6.
		NO	Replacement of engine electronic control unit

Step 6	Inspection items		Inspection by control data
	Maintenance item		Measure item No. A4 “DPF SW” of Service Data.
	Inspection condition		–
	Requirements		Press diesel particulate filter cleaning switch and check that “DPF SW” display switches from OFF to ON.
	Inspection result (Is the judging standard satisfied?)	YES	Go to step 7.
		NO	Replacement of diesel particulate filter cleaning switch or engine electronic control unit

Step 7	Inspection items		Inspection of pressure hose
	Maintenance item		Check pressure hose of DPF absolute pressure sensor and DPF pressure sensor (DIFF) for connection and cracks.
	Inspection condition		–
	Requirements		Nothing abnormal detected
	Inspection result (Is the judging standard satisfied?)	YES	Go to step 8.
		NO	After correction and replacement of hose, go to step 8.

Step 8	Inspection items		Inspection of DPF pressure sensor (DIFF)
	Maintenance item		Measure value of voltage between connector terminal No. 2 (+) and 1 (–).
	Inspection condition		• Apply voltage DC 5 V across terminals No. 3 (+) and 1 (–). • Gradually increase applied air pressure.
	Requirements		• 0 ± 3.5 kPa {0 ± 0.5 psi, 0 ± 0.04 kgf/cm^2} : 1 V • 100 ± 3.5 kPa {15 ± 0.5 psi, 1.02 ± 0.04 kgf/cm^2} : 4.5 V
	Inspection result (Is the judging standard satisfied?)	YES	Go to step 9.
		NO	Replacement of DPF pressure sensor (DIFF)

<Step 8 inspection diagram>

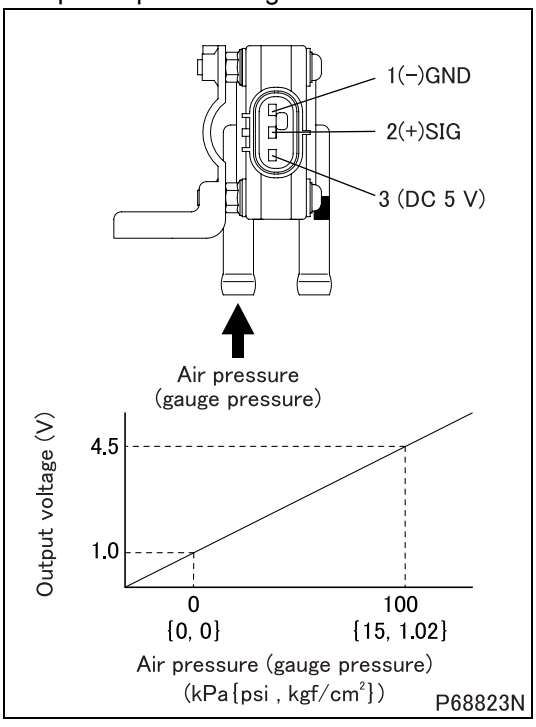

Step 9	Inspection items		Inspection of air flow sensor unit
	Maintenance item		Since inspection of single part is not easy, whether characteristics are deteriorated or not must be checked for the sensor mounted on the current vehicle by measuring and comparing the amount of sensor intake air of the sensor currently mounted on vehicle and that replaced with new one by the service data. **(1) Prepare for inspection** • Clean or replace air cleaner element. • Prepare a new air flow sensor. • Warm up the engine fully. **(2) Measure the intake air of current sensor** • Keep pressing the accelerator pedal until it bottom the stopper bolt from the idling state. (no load maximum rotation) • Measure the following items from among “Service data”. **<General Scanning Tool used>** • Engine speed: “Ne” (rpm) • Intake air flow rate: “Air Flow Rate from MAFS” (g/s) **<Multi-Use Tester used>** • Engine speed: 01 “Engine Revolution” (rpm) • Intake air flow rate: 60 “Air mass flow” (g/s) **(3) Measure the intake air of new sensor** • Replace the currently mounted sensor with a new sensor. • Keep pressing the accelerator pedal until it bottom the stopper bolt from the idling state. (no load maximum rotation) • Measure intake air flow at the same rpm as that of engine revolution in item (2) of “Service data”. **(4) Comparison whether characteristics are deteriorated** • Calculate the characteristics deterioration factor (%) by the following equation. • Characteristics deterioration factor (%) = (intake air of new item – current intake air) × 100/intake air of new item.
	Inspection condition		–
	Requirements		10% or less
	Inspection result (Is the judging standard satisfied?)	YES	Go to step 10.
		NO	Replacement of air flow sensor

Step 10	Inspection items		Inspection by control data
	Maintenance item		Perform actuator test item No. B2 “Fuel Leak Check”.
	Inspection condition		Engine start: At idle
	Requirements		There is no leak from injectors (four).
	Inspection result (Is the judging standard satisfied?)	YES	• Inspection of exhaust gas recirculation system (exhaust gas recirculation pipe, exhaust gas recirculation cooler, exhaust gas recirculation valve) • Inspection of engine
		NO	Replacement of injector

[Fault code]
Diagnosis code: P2031/Flash code: 88
[Monitor]
Characteristic abnormality of DPF temperature sensor 2
[Fault (outline)]
Gain and offset drift
[Diagnosis check]
- Difference in temperature output between DPF temperature sensors (1 and 2) is monitored for clogging of ceramic filter during stop of diesel particulate filter regeneration function (with vehicle in normal condition).

[Code generation condition]
- Difference in temperature output remains excessively high (over 150°C {302°F}) or low (below –150°C {–238°F}) for 10 seconds <Relative check> and 20 seconds <Separate check> .
  (Warning lamp is lit and diagnosis code is displayed on third establishment of code generation condition.)

[Diagnosis check timing]
- Fault diagnosis is performed only once during the driving cycle.

[Diagnostic requirement]
- Diesel particulate filter regeneration control: not effected
- Engine running time: more than 300 seconds
- Time after diesel particulate filter regeneration control was effected: more than 1500 seconds
- Engine speed and load: logical output is 1
- Time till above conditions were met: more than 30 seconds
- Catalytic temperature sensor: normal in output signal
- DPF temperature sensor 1: normal in output signal
- DPF temperature sensor 2: normal in output signal
- Sensor 5 V power supply: in order
- Battery voltage: in order
- MPROP (rail pressure control valve): in order
- Injector: in order

[Control effected by electronic control unit during fault]
- Effects no special control.

[Probable cause of trouble]
- Malfunction of DPF temperature sensor 2

[Recoverability]
- Recovered if signal becomes normal when starter switch is turned OFF to ON (power supply resumed to electronic control unit).
  (Warning lamp is extinguished and diagnosis code is cleared at fourth display of diagnosis code after recovery.)

[Fault code]
Diagnosis code: P2032/Flash code: 88
[Monitor]
Failure of DPF temperature sensor 2
[Fault (outline)]
Low signal range check
[Diagnosis check]
- Output voltage of DPF temperature sensor 2 is monitored.

[Code generation condition]
- Output voltage of DPF temperature sensor 2 remains below 0.36 V for 3 seconds. (sensor temperature: 1000°C {1832°F} or more)
  (Warning lamp is lit and diagnosis code is displayed on third establishment of code generation condition.)

[Diagnosis check timing]
- Fault diagnosis is continuously performed during the driving cycle.

[Diagnostic requirement]
–

[Control effected by electronic control unit during fault]
- Pressure after ceramic diesel particulate filter is fixed at backup value.
- Related fault check is stopped.

[Probable cause of trouble]
- Open-circuit or short-circuit of harness between electronic control unit and sensor
- Malfunction of each connector
- Malfunction of DPF temperature sensor 2
- Malfunction of electronic control unit

[Recoverability]
- Recovered if signal becomes normal with starter switch in ON position.
  (Warning lamp is extinguished and diagnosis code is cleared at fourth display of diagnosis code after recovery.)

[Electronic Control Unit Connection Diagram]

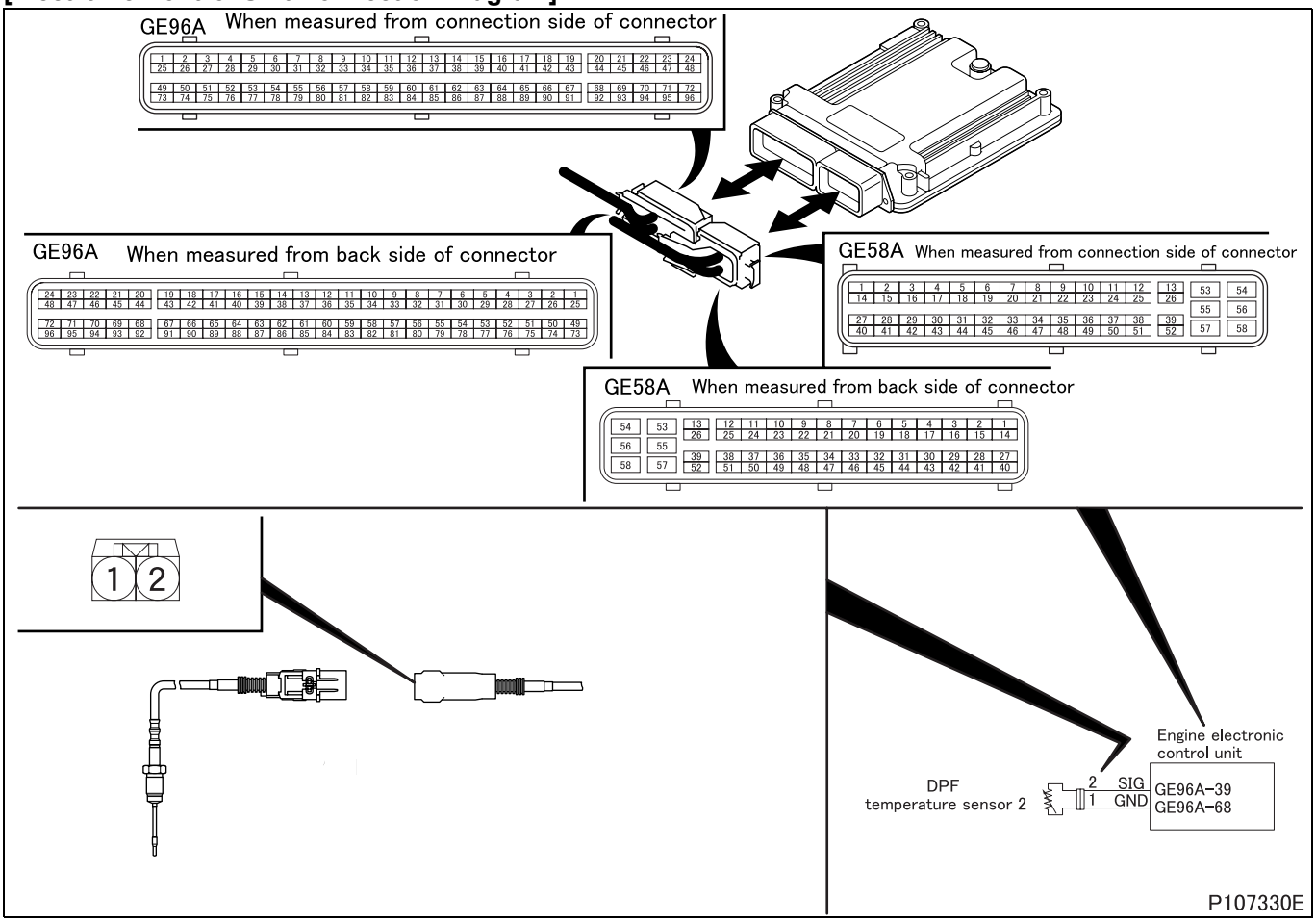

[Parts Identification and Location]

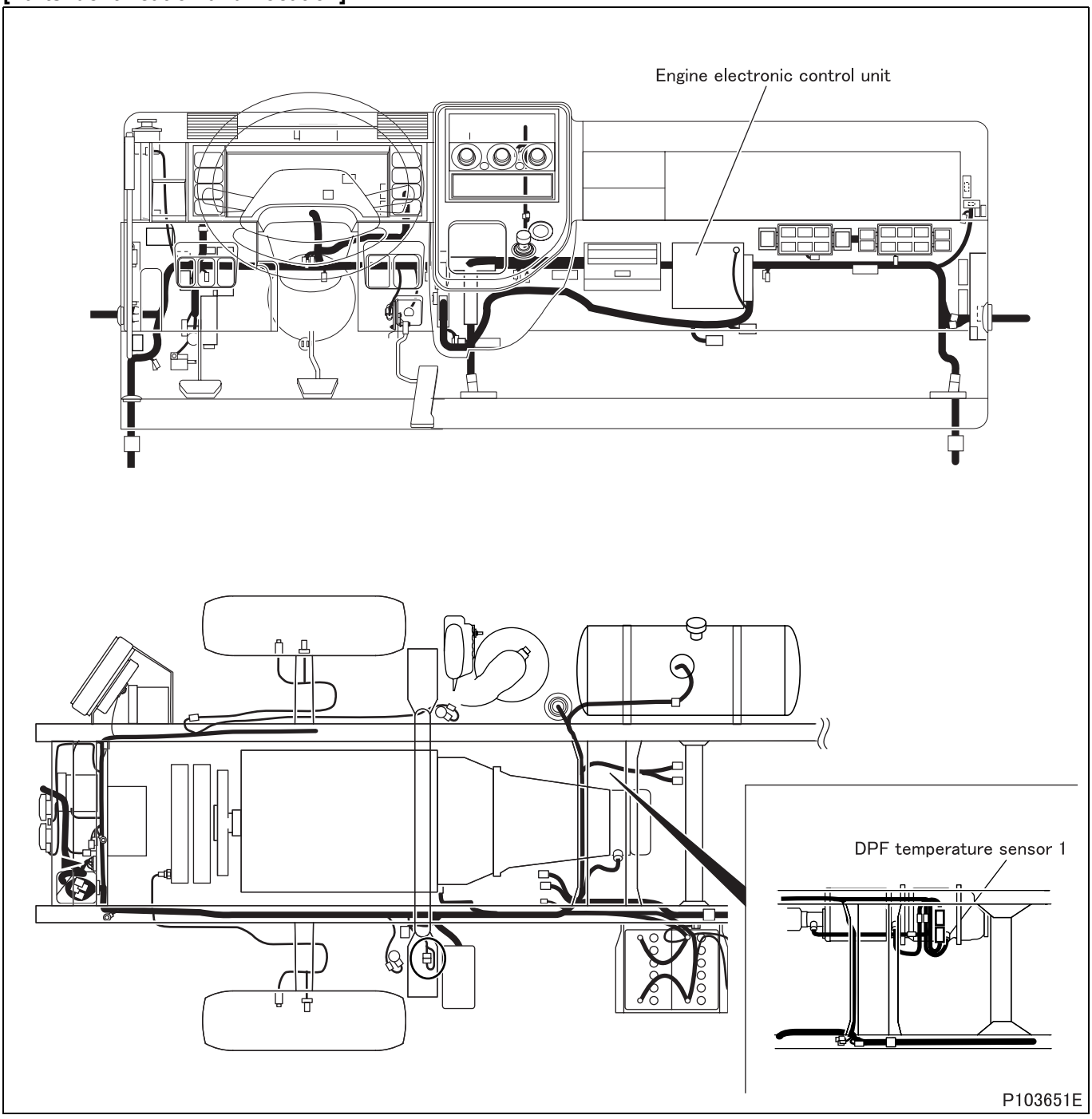

[Fault diagnosis]

- Perform checks in the sequence of the following steps.

Step 1	Inspection items		Inspection by control data
	Maintenance item		Measure item No. 26 “DPF Temperature (DownStream)” of Service Data.
	Inspection condition		During warm-up
	Requirements		Gradually increased
	Inspection result (Is the judging standard satisfied?)	YES	Go to transient fault (See Gr00.).
		NO	Go to step 2.

Step 2	Inspection items		Inspection by electronic control unit connector
	Maintenance item		Measure value of resistance between connector (GE96A) terminal No. 39 and 68.
	Inspection condition		• Starter switch: OFF • Disconnect electronic control unit from harness and measure at vehicle side connector.
	Requirements		• 20°C {68°F} : 241.8 kΩ • 50°C {122°F} : 106.2 $^{+74.3}_{-41.8}$ kΩ • 100°C {212°F} : 33.58 $^{+17.60}_{-10.60}$ kΩ • 150°C {302°F} : 13.90 $^{+5.36}_{-3.60}$ kΩ • 200°C {392°F} : 6.896 $^{+2.064}_{-1.252}$ kΩ
	Inspection result (Is the judging standard satisfied?)	YES	Go to step 3.
		NO	Go to step 4.

Step 3	Inspection items		Inspection of electronic control unit connector
	Maintenance item		Inspection of connector
	Inspection condition		–
	Requirements		• Connector is properly connected. • No trace of water entry is found. • No corrosion is found in terminal. • Connection to terminal is appropriate.
	Inspection result (Is the judging standard satisfied?)	YES	Go to step 8.
		NO	Modify connector.

Step 4	Inspection items		Inspection of sensor connector
	Maintenance item		Inspection of connector
	Inspection condition		–
	Requirements		• Connector is properly connected. • No trace of water entry is found. • No corrosion is found in terminal. • Connection to terminal is appropriate.
	Inspection result (Is the judging standard satisfied?)	YES	Go to step 5.
		NO	Modify connector.

Step 5	Inspection items		Inspection of DPF temperature sensor 2 unit
	Maintenance item		Measure value of resistance between connector terminal No. 1 and 2.
	Inspection condition		• Put DPF temperature sensor 2 in container filled with engine oil. • Heat the oil to each of the specified temperatures. Stir the oil well while doing so.
	Requirements		• 20°C {68°F} : 241.8 kΩ • 50°C {122°F} : 106.2 $^{+74.3}_{-41.8}$ kΩ • 100°C {212°F} : 33.58 $^{+17.60}_{-10.60}$ kΩ • 150°C {302°F} : 13.90 $^{+5.36}_{-3.60}$ kΩ • 200°C {392°F} : 6.896 $^{+2.064}_{-1.252}$ kΩ
	Inspection result (Is the judging standard satisfied?)	YES	Go to step 6
		NO	Replacement of sensor

<Step 5 inspection diagram>

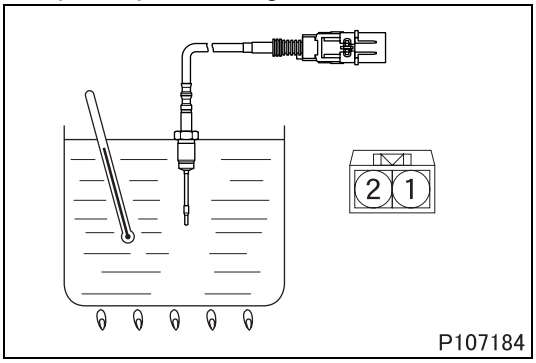

Step 6	Inspection items		Inspection of harness between electronic control unit and sensor (power supply)
	Maintenance item		Check circuit between electronic control unit connector (GE96A) terminal No. 39 and sensor connector terminal No. 2.
	Inspection condition		Disconnect each device from harness and measure from connection side of harness connector.
	Requirements		There is continuity.
	Inspection result (Is the judging standard satisfied?)	YES	Go to step 7.
		NO	Modify harness.

Step 7	Inspection items		Inspection of harness between electronic control unit and sensor (ground)
	Maintenance item		Check circuit between electronic control unit connector (GE96A) terminal No. 68 and sensor connector terminal No. 1.
	Inspection condition		Disconnect each device from harness and measure from connection side of harness connector.
	Requirements		There is continuity.
	Inspection result (Is the judging standard satisfied?)	YES	Go to step 8.
		NO	Modify harness.

Step 8	Inspection items		Inspection by control data
	Maintenance item		Measure item No. 26 “DPF Temperature (DownStream)” of Service Data.
	Inspection condition		During warm-up
	Requirements		Gradually increased
	Inspection result (Is the judging standard satisfied?)	YES	Go to transient fault (See Gr00.).
		NO	Replacement of electronic control unit

[Fault code]
Diagnosis code: P2033/Flash code: 88
[Monitor]
Failure of DPF temperature sensor 2
[Fault (outline)]
High signal range check
[Diagnosis check]
- Output voltage of DPF temperature sensor 2 is monitored.

[Code generation condition]
- Output voltage of DPF temperature sensor 2 remains over 4.93 V for 30 seconds. (sensor temperature: 40°C {118°F} or less).
  (Warning lamp is lit and diagnosis code is displayed on third establishment of code generation condition.)

[Diagnosis check timing]
- Fault diagnosis is performed only once during the driving cycle.

[Diagnostic requirement]
- Engine speed: 1400 to 5000 rpm
- Fuel injection quantity: 35 to 200 mg/cyc
- Water temperature: above 35°C {95°F}

[Control effected by electronic control unit during fault]
- Pressure after ceramic diesel particulate filter is fixed at backup value.
- Related fault check is stopped.

[Probable cause of trouble]
- Open-circuit or short-circuit of harness between electronic control unit and sensor
- Malfunction of each connector
- Malfunction of DPF temperature sensor 2
- Malfunction of electronic control unit

[Recoverability]
- Recovered if signal becomes normal with starter switch in ON position.
  (Warning lamp is extinguished and diagnosis code is cleared at fourth display of diagnosis code after recovery.)

[Electronic Control Unit Connection Diagram]

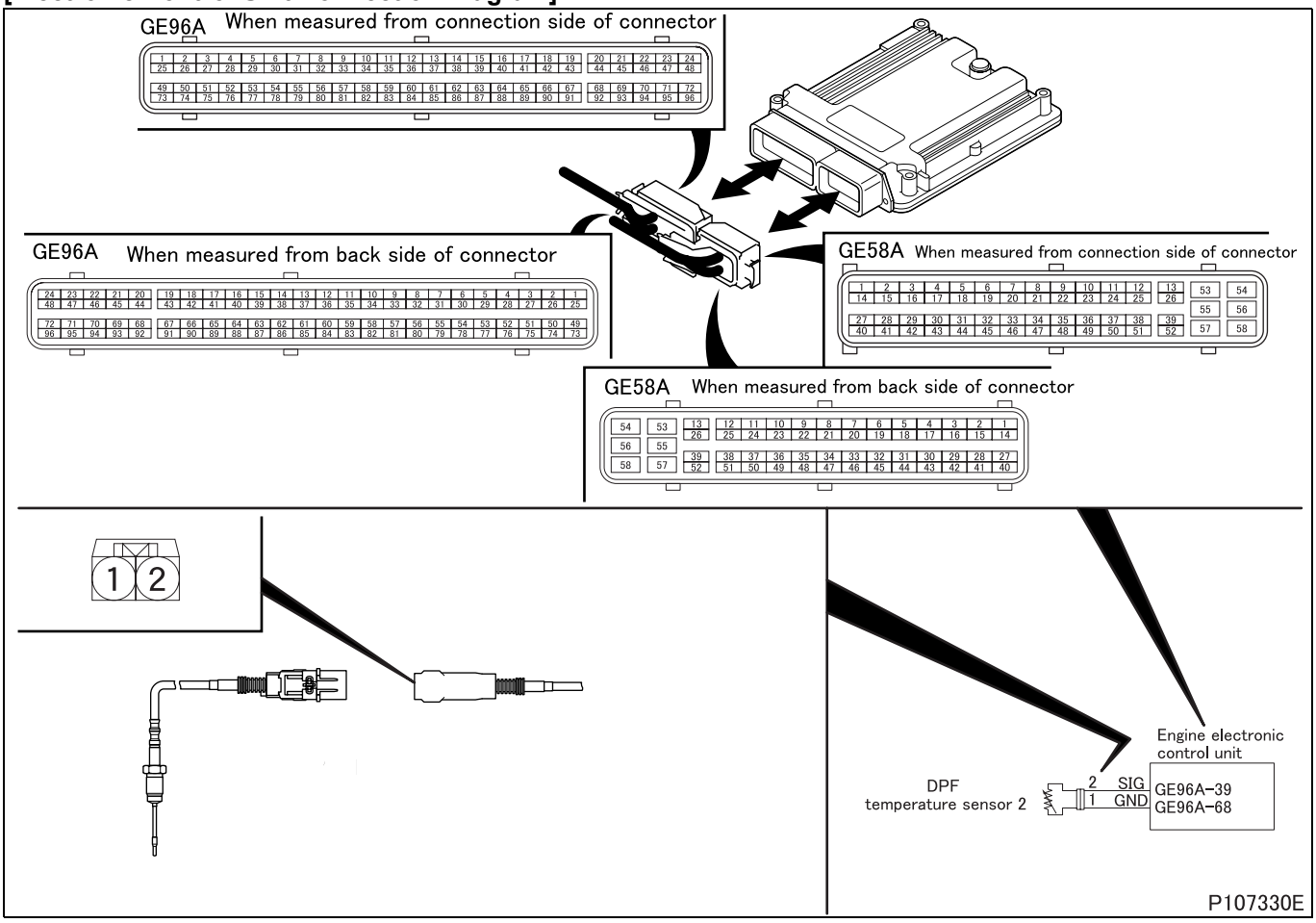

[Parts Identification and Location]

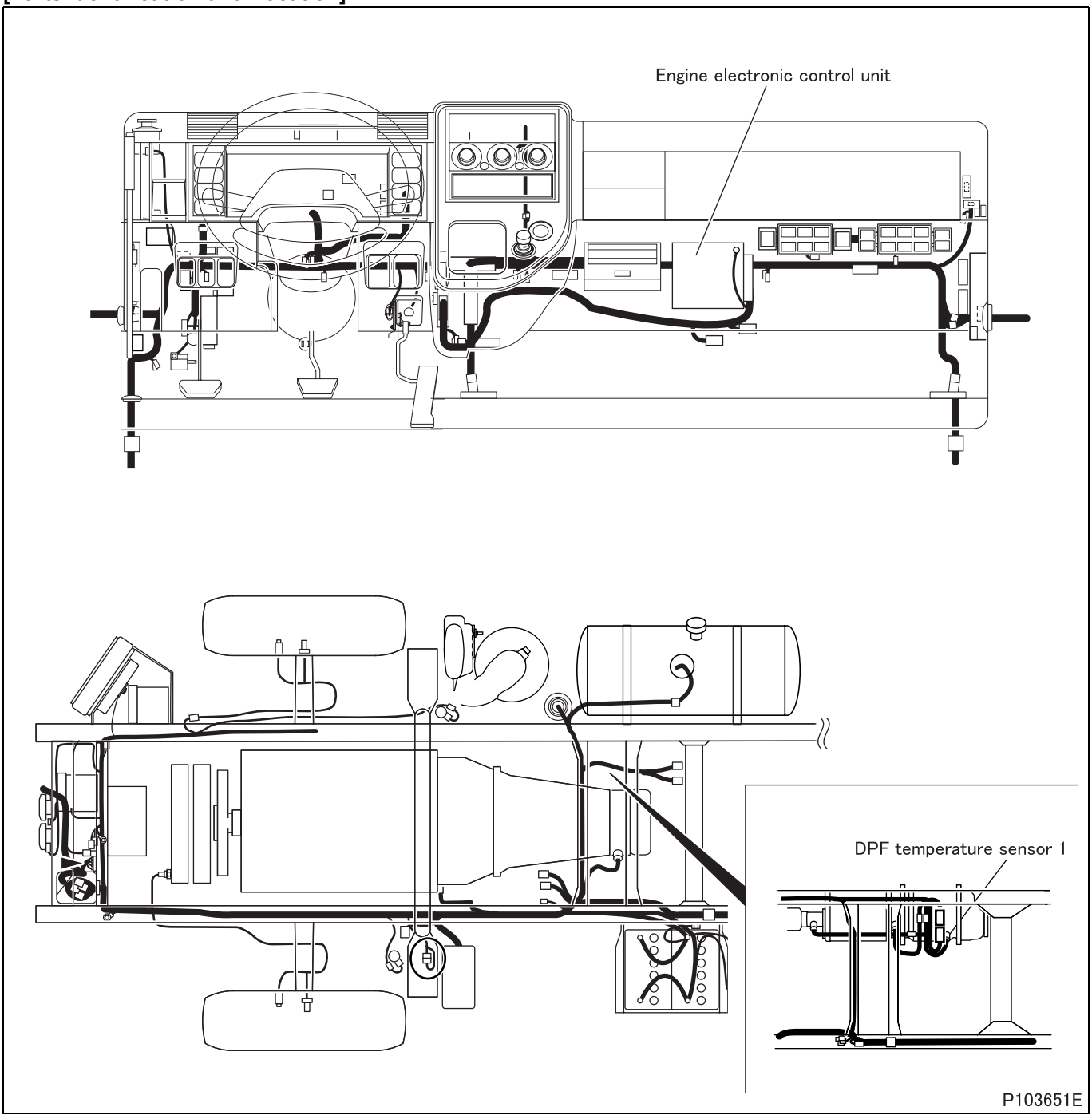

[Fault diagnosis]

- Perform checks in the sequence of the following steps.

Step 1	Inspection items		Inspection by control data
	Maintenance item		Measure item No. 26 “DPF Temperature (DownStream)” of Service Data.
	Inspection condition		During warm-up
	Requirements		Gradually increased
	Inspection result (Is the judging standard satisfied?)	YES	Go to transient fault (See Gr00.).
		NO	Go to step 2.

Step 2	Inspection items		Inspection by electronic control unit connector
	Maintenance item		Measure value of resistance between connector (GE96A) terminal No. 39 and 68.
	Inspection condition		• Starter switch: OFF • Disconnect electronic control unit from harness and measure at vehicle side connector.
	Requirements		• 20°C {68°F} : 241.8 kΩ • 50°C {122°F} : 106.2 $^{+74.3}_{-41.8}$ kΩ • 100°C {212°F} : 33.58 $^{+17.60}_{-10.60}$ kΩ • 150°C {302°F} : 13.90 $^{+5.36}_{-3.60}$ kΩ • 200°C {392°F} : 6.896 $^{+2.064}_{-1.252}$ kΩ
	Inspection result (Is the judging standard satisfied?)	YES	Go to step 3.
		NO	Go to step 4.

Step 3	Inspection items		Inspection of electronic control unit connector
	Maintenance item		Inspection of connector
	Inspection condition		–
	Requirements		• Connector is properly connected. • No trace of water entry is found. • No corrosion is found in terminal. • Connection to terminal is appropriate.
	Inspection result (Is the judging standard satisfied?)	YES	Go to step 8.
		NO	Modify connector.

Step 4	Inspection items		Inspection of sensor connector
	Maintenance item		Inspection of connector
	Inspection condition		–
	Requirements		• Connector is properly connected. • No trace of water entry is found. • No corrosion is found in terminal. • Connection to terminal is appropriate.
	Inspection result (Is the judging standard satisfied?)	YES	Go to step 5.
		NO	Modify connector.

Step 5	Inspection items		Inspection of DPF temperature sensor 2 unit
	Maintenance item		Measure value of resistance between connector terminal No. 1 and 2.
	Inspection condition		• Put DPF temperature sensor 2 in container filled with engine oil. • Heat the oil to each of the specified temperatures. Stir the oil well while doing so.
	Requirements		• 20°C {68°F} : 241.8 kΩ • 50°C {122°F} : 106.2 $^{+74.3}_{-41.8}$ kΩ • 100°C {212°F} : 33.58 $^{+17.60}_{-10.60}$ kΩ • 150°C {302°F} : 13.90 $^{+5.36}_{-3.60}$ kΩ • 200°C {392°F} : 6.896 $^{+2.064}_{-1.252}$ kΩ
	Inspection result (Is the judging standard satisfied?)	YES	Go to step 6
		NO	Replacement of sensor

<Step 5 inspection diagram>

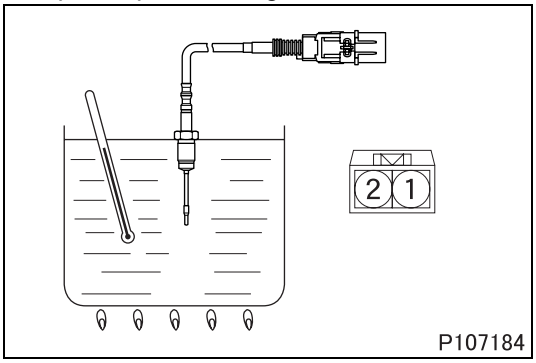

Step 6	Inspection items		Inspection of harness between electronic control unit and sensor (power supply)
	Maintenance item		Check circuit between electronic control unit connector (GE96A) terminal No. 39 and sensor connector terminal No. 2.
	Inspection condition		Disconnect each device from harness and measure from connection side of harness connector.
	Requirements		There is continuity.
	Inspection result (Is the judging standard satisfied?)	YES	Go to step 7.
		NO	Modify harness.

Step 7	Inspection items		Inspection of harness between electronic control unit and sensor (ground)
	Maintenance item		Check circuit between electronic control unit connector (GE96A) terminal No. 68 and sensor connector terminal No. 1.
	Inspection condition		Disconnect each device from harness and measure from connection side of harness connector.
	Requirements		There is continuity.
	Inspection result (Is the judging standard satisfied?)	YES	Go to step 8.
		NO	Modify harness.

Step 8	Inspection items		Inspection by control data
	Maintenance item		Measure item No. 26 “DPF Temperature (DownStream)” of Service Data.
	Inspection condition		During warm-up
	Requirements		Gradually increased
	Inspection result (Is the judging standard satisfied?)	YES	Go to transient fault (See Gr00.).
		NO	Replacement of electronic control unit

[Fault code]
Diagnosis code: P2080/Flash code: 42
[Monitor]
Relative check between catalytic temperature sensor and DPF temperature sensor 1
[Fault (outline)]
Gain and offset drift
[Diagnosis check]
- Relative temperature check is made between catalytic temperature sensor and DPF temperature sensor 1 during stop of diesel particulate filter regeneration function (with vehicle in normal condition).

[Code generation condition]
- Difference in temperature output remains high (over 150°C {302°F}) or low (below –150°C {–238°F}) for 10 seconds.
  (Warning lamp is lit and diagnosis code is displayed on third establishment of code generation condition.)

[Diagnosis check timing]
- Fault diagnosis is performed only once during the driving cycle.

[Diagnostic requirement]
- Diesel particulate filter regeneration control: not effected
- Engine running time: more than 300 seconds
- Time after diesel particulate filter regeneration control was effected: more than 1500 seconds
- Engine speed and load: logical output is 1
- Time till above conditions were met: more than 30 seconds
- Catalytic temperature sensor: normal in output signal
- DPF temperature sensor 1: normal in output signal
- DPF temperature sensor 2: normal in output signal
- Sensor 5 V power supply: in order
- Battery voltage: in order
- MPROP (rail pressure control valve): in order
- Injector: in order
- When catalytic temperature sensor and DPF temperature sensor 2 are the same in output.

[Control effected by electronic control unit during fault]
- Related fault check is stopped.

[Probable cause of trouble]
<If diagnosis code P0284 was not recorded at the same time>
- Malfunction of catalytic temperature sensor

<If diagnosis code P0284 was recorded at the same time>
- Malfunction of DPF temperature sensor 2

[Recoverability]
- Recovered if signal becomes normal when starter switch is turned OFF to ON (power supply resumed to electronic control unit).
  (Warning lamp is extinguished and diagnosis code is cleared at fourth display of diagnosis code after recovery.)

[Fault code]
Diagnosis code: P2084/Flash code: 92
[Monitor]
Relative check between DPF temperature sensors (1 and 2)
[Fault (outline)]
Gain and offset drift
[Diagnosis check]
- Relative temperature check is made between DPF temperature sensors (1 and 2) during stop of diesel particulate filter regeneration function (with vehicle in normal condition).

[Code generation condition]
- Temperature difference remains for 10 seconds.
  (Warning lamp is lit and diagnosis code is displayed on third establishment of code generation condition.)

[Diagnosis check timing]
- Fault diagnosis is performed only once during the driving cycle.

[Diagnostic requirement]
- Diesel particulate filter regeneration control: not effected
- Engine running time: more than 300 seconds
- Time after diesel particulate filter regeneration control was effected: more than 1500 seconds
- Engine speed and load: logical output is 1
- Time till above conditions were met: more than 30 seconds
- Catalytic temperature sensor: normal in output signal
- DPF temperature sensor 1: normal in output signal
- DPF temperature sensor 2: normal in output signal
- Sensor 5 V power supply: in order
- Battery voltage: in order
- MPROP (rail pressure control valve): in order
- Injector: in order
- When catalytic temperature sensor and DPF temperature sensor 2 are the same in output.

[Control effected by electronic control unit during fault]
- Related fault check is stopped.

[Probable cause of trouble]
<If diagnosis code P2080 was not recorded at the same time>
- Malfunction of DPF temperature sensor 1

<If diagnosis code P2080 was recorded at the same time>
- Malfunction of DPF temperature sensor 2

[Recoverability]
- Recovered if signal becomes normal when starter switch is turned OFF to ON (power supply resumed to electronic control unit).
  (Warning lamp is extinguished and diagnosis code is cleared at fourth display of diagnosis code after recovery.)

[Fault code]
Diagnosis code: P2100/Flash code: 28
[Monitor]
Failure of intake throttle system
[Fault (outline)]
Circuit check
[Diagnosis check]
- Throttle electronic drive unit monitors built in motor of intake throttle for circuit fault and sends fault information to engine electronic control unit through controller area network communication.
- Monitoring by throttle electronic drive unit is performed from initial operational status of motor at starter switch ON.

[Code generation condition]
- Motor circuit remains open as detected by electronic drive unit for 2 seconds (Warning lamp is lit and diagnosis code is displayed on third establishment of code generation condition).

[Diagnosis check timing]
- Fault diagnosis is continuously performed during the driving cycle.

[Diagnostic requirement]
- Controller area network communication in order

[Control effected by electronic control unit during fault]
- Exhaust gas recirculation control is stopped.
- Throttle controls disabled
- Diesel particulate filter regeneration is stopped.
- Intake throttle actuator test is inhibited.
- Related fault check is stopped.

[Probable cause of trouble]
- Open-circuit or short-circuit of harness between electronic drive unit and throttle actuator
- Malfunction of each connector
- Malfunction of throttle motor (built in throttle actuator)
- Malfunction of throttle position sensor (built in throttle actuator)
- Malfunction of electronic drive unit
- Malfunction of electronic drive unit relay

[Recoverability]
- Recovered if signal becomes normal when starter switch is turned OFF to ON (power supply resumed to electronic control unit).
  (Warning lamp is extinguished and diagnosis code is cleared at fourth display of diagnosis code after recovery.)

[Electronic Control Unit Connection Diagram]

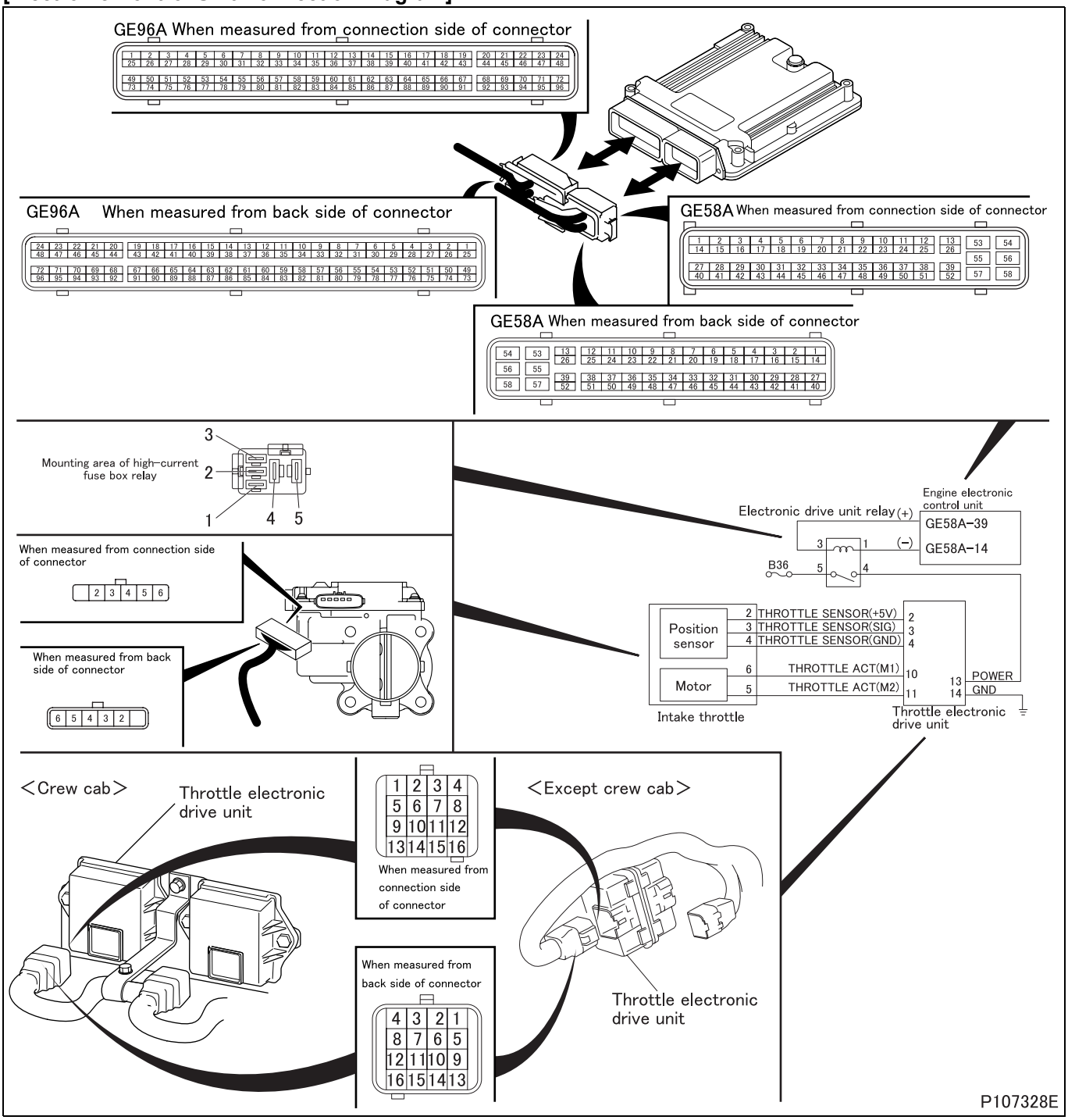

[Parts Identification and Location]

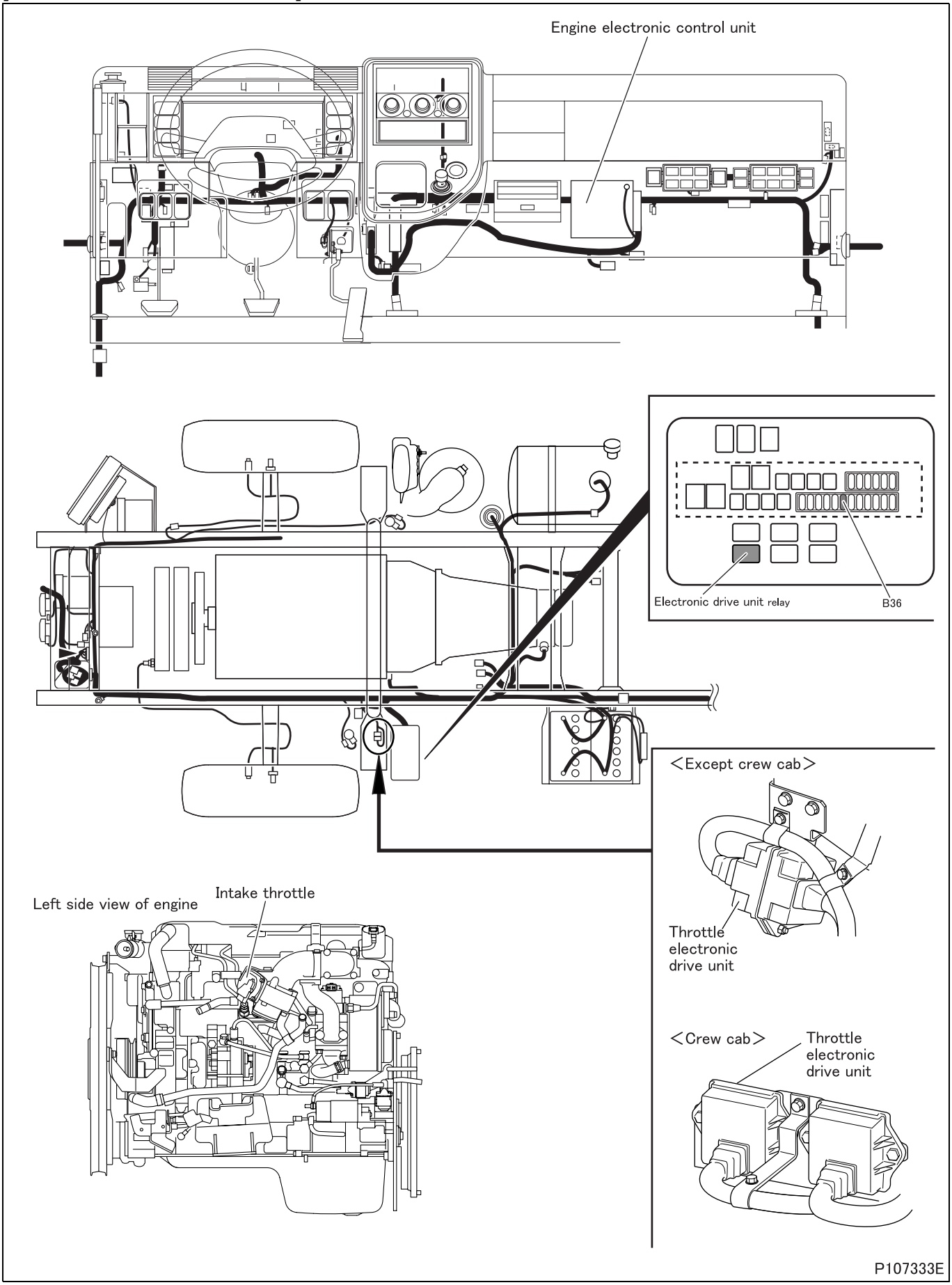

[Fault diagnosis]

- Perform checks in the sequence of the following steps.

Step 1	Inspection items		Inspection by control data
	Maintenance item		Perform actuator test item No. A3 “Intake Throttle 1”.
	Inspection condition		• Vehicle: stationary (vehicle speed 0 km/h {0 MPH}) • Starter switch: ON (engine started) • Transmission: neutral • Diagnosis switch: OFF (fuse removed)
	Requirements		Actual position matches with target value set by Multi-Use Tester (check with service data “53: Actual Intake Throttle Position”).
	Inspection result (Is the judging standard satisfied?)	YES	Go to transient fault (See Gr00.).
		NO	Go to step 2.

Step 2	Inspection items		Inspection of electronic drive unit connector
	Maintenance item		Inspection of connector
	Inspection condition		–
	Requirements		• Connector is properly connected. • No trace of water entry is found. • No corrosion is found in terminal. • Connection to terminal is appropriate.
	Inspection result (Is the judging standard satisfied?)	YES	Go to step 3.
		NO	Modify connector.

Step 3	Inspection items		Inspection of throttle actuator connector
	Maintenance item		Inspection of connector
	Inspection condition		–
	Requirements		• Connector is properly connected. • No trace of water entry is found. • No corrosion is found in terminal. • Connection to terminal is appropriate.
	Inspection result (Is the judging standard satisfied?)	YES	Go to step 4.
		NO	Modify connector.

Step 4	Inspection items		Inspection by control data
	Maintenance item		Check if following diagnosis codes occur simultaneously. • P0685 “EDU Relay (Open)” • P0686 “EDU Relay (Low)” • P0687 “EDU Relay (High)”
	Inspection condition		Starter switch: ON
	Requirements		Codes occur.
	Inspection result (Is the judging standard satisfied?)	YES	Inspect diagnosis code that is occurring.
		NO	Go to step 5.

Step 5	Inspection items		Inspection of electronic drive unit connector (power supply)
	Maintenance item		Measure value of voltage between connector terminal No. 13 (+) and 14 (–).
	Inspection condition		• Disconnect connector and measure from harness side. • Starter switch: ON • Perform actuator test item No. AF “EDU Relay”.
	Requirements		Same as battery voltage.
	Inspection result (Is the judging standard satisfied?)	YES	Go to step 10.
		NO	Go to step 6.

Step 6	Inspection items		Inspection of relay connector
	Maintenance item		Inspection of connector
	Inspection condition		–
	Requirements		• Connector is properly connected. • No trace of water entry is found. • No corrosion is found in terminal. • Connection to terminal is appropriate.
	Inspection result (Is the judging standard satisfied?)	YES	Go to step 7.
		NO	Modify connector.

Step 7	Inspection items		Inspection of harness between fuse and relay
	Maintenance item		Check circuit between fuse No. B35 and relay connector terminal No. 5.
	Inspection condition		Disconnect each device from harness and measure from connection side of harness connector.
	Requirements		There is continuity.
	Inspection result (Is the judging standard satisfied?)	YES	Go to step 8.
		NO	Modify harness.

Step 8	Inspection items		Inspection of harness between relay and electronic drive unit
	Maintenance item		Check circuit between relay connector terminal No. 4 and electronic drive unit connector terminal No. 13.
	Inspection condition		Disconnect each device from harness and measure from connection side of harness connector.
	Requirements		There is continuity.
	Inspection result (Is the judging standard satisfied?)	YES	After replacement of relay, go to step 9
		NO	Modify harness.

Step 9	Inspection items		Inspection of harness between electronic drive unit and ground
	Maintenance item		Check circuit between following electronic drive unit connector terminals. • Electronic drive unit ground: terminal No. 14 - chassis ground • Sensor ground: terminal No. 4 and 14
	Inspection condition		Disconnect each device from harness and measure from connection side of harness connector.
	Requirements		There is continuity.
	Inspection result (Is the judging standard satisfied?)	YES	Go to step 10.
		NO	Modify harness.

Step 10	Inspection items		Inspection of electronic drive unit connector (motor)
	Maintenance item		Measure value of resistance between connector terminal No. 10 and 11.
	Inspection condition		Disconnect connector and measure from harness side.
	Requirements		0.3 to 80 Ω
	Inspection result (Is the judging standard satisfied?)	YES	Go to step 13.
		NO	Go to step 11.

Step 11	Inspection items		Inspection of harness between electronic drive unit and throttle actuator (motor)
	Maintenance item		Check circuit between following connector terminals. • Motor (1): electronic drive unit connector terminal No. 10 - throttle actuator connector terminal No. 6 • Motor (2): electronic drive unit connector terminal No. 11 - throttle actuator connector terminal No. 5
	Inspection condition		Disconnect each device from harness and measure from connection side of harness connector.
	Requirements		There is continuity.
	Inspection result (Is the judging standard satisfied?)	YES	Go to step 12.
		NO	Modify harness.

Step 12	Inspection items		Inspection of throttle actuator unit (motor)
	Maintenance item		Measure value of resistance between connector terminal No. 5 and 6.
	Inspection condition		• Keep throttle actuator installed on vehicle. • Disconnect connector and measure throttle actuator side.
	Requirements		0.3 to 80 Ω
	Inspection result (Is the judging standard satisfied?)	YES	Go to step 13.
		NO	Replacement of throttle actuator

<Step 12 inspection diagram>

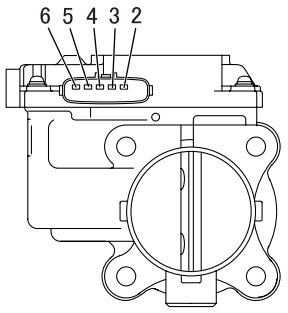

Step 13	Inspection items		Inspection of throttle actuator connector (position sensor: power supply)
	Maintenance item		Measure value of voltage between connector terminal No. 2 (+) and 4 (–).
	Inspection condition		• Measure from back side of harness connector with each device connected to harness. • Starter switch: ON
	Requirements		5 V
	Inspection result (Is the judging standard satisfied?)	YES	Go to step 14.
		NO	Go to step 15.

Step 14	Inspection items		Inspection of electronic drive unit connector (position sensor: signal)
	Maintenance item		Measure value of voltage between connector terminal No. 3 (+) and 4 (–).
	Inspection condition		• Measure from back side of harness connector with each device connected to harness. • Starter switch: ON • Perform actuator test item No. A3 “Intake Throttle 1”.
	Requirements		• Valve fully closed: 0.5 V • Valve fully opened: 4.375 V
	Inspection result (Is the judging standard satisfied?)	YES	Go to step 16.
		NO	Go to step 15.

Step 15	Inspection items		Inspection of harness between electronic drive unit and throttle actuator (position sensor)
	Maintenance item		Check circuit between following connector terminals. • Sensor (power supply): electronic drive unit connector terminal No. 2 - throttle actuator connector terminal No. 2 • Sensor (signal): electronic drive unit connector terminal No. 3 - throttle actuator connector terminal No. 3 • Sensor (ground): electronic drive unit connector terminal No. 4 - throttle actuator connector terminal No. 4
	Inspection condition		Disconnect each device from harness and measure from connection side of harness connector.
	Requirements		There is continuity.
	Inspection result (Is the judging standard satisfied?)	YES	After replacement of throttle actuator, go to step 16
		NO	Modify harness.

Step 16	Inspection items		Inspection by control data
	Maintenance item		Perform actuator test item No. A3 “Intake Throttle 1”.
	Inspection condition		• Vehicle: stationary (vehicle speed 0 km/h {0 MPH}) • Starter switch: ON (engine started) • Transmission: neutral • Diagnosis switch: OFF (fuse removed)
	Requirements		Actual position matches with target value set by Multi-Use Tester (check with service data “53: Actual Intake Throttle Position”).
	Inspection result (Is the judging standard satisfied?)	YES	Go to transient fault (See Gr00.).
		NO	Replacement of electronic drive unit

[Fault code]
Diagnosis code: P2101/Flash code: 28
[Monitor]
Failure of intake throttle system
[Fault (outline)]
- Intake throttle valve slow response/steady state position deviation
- Circuit check

[Diagnosis check]
- Throttle electronic drive unit monitors built in motor of intake throttle for sticking and sends fault information to engine electronic control unit through controller area network communication.
- Throttle electronic drive unit detects valve opening by position sensor output data and calculates target opening from such data.

[Code generation condition]
Diagnosis code is generated under either of the following conditions (Warning lamp is lit and diagnosis code is displayed on third establishment of code generation condition).
- Difference in valve opening between target and actual values remains more than 20 degrees for 2 seconds.
- Motor remains stuck as detected by electronic drive unit for 2 seconds.

[Diagnosis check timing]
- Fault diagnosis is continuously performed during the driving cycle.

[Diagnostic requirement]
- Battery voltage: in order
- Exhaust gas recirculation valve: in order
- Electronic drive unit controller area network: in order

[Control effected by electronic control unit during fault]
- Exhaust gas recirculation control is stopped.
- Throttle controls disabled
- Diesel particulate filter regeneration is stopped.
- Intake throttle actuator test is inhibited.
- Related fault check is stopped.

[Probable cause of trouble]
- Open-circuit or short-circuit of harness between electronic drive unit and throttle actuator
- Malfunction of each connector
- Malfunction of throttle motor (built in throttle actuator)
- Malfunction of throttle position sensor (built in throttle actuator)
- Malfunction of electronic drive unit
- Malfunction of electronic drive unit relay

[Recoverability]
- Recovered if signal becomes normal when starter switch is turned OFF to ON (power supply resumed to electronic control unit).
  (Warning lamp is extinguished and diagnosis code is cleared at fourth display of diagnosis code after recovery.)

[Electronic Control Unit Connection Diagram]

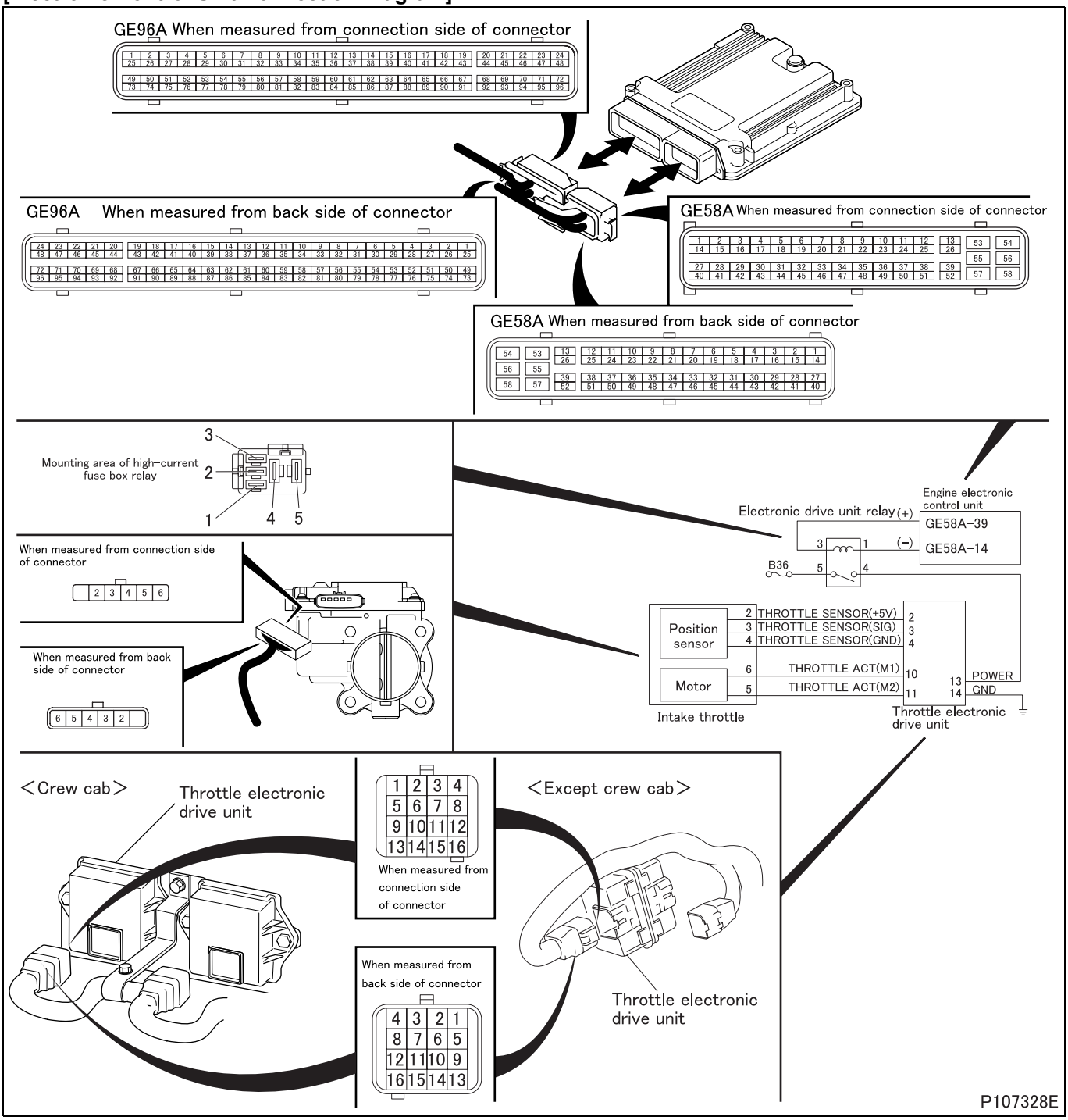

[Parts Identification and Location]

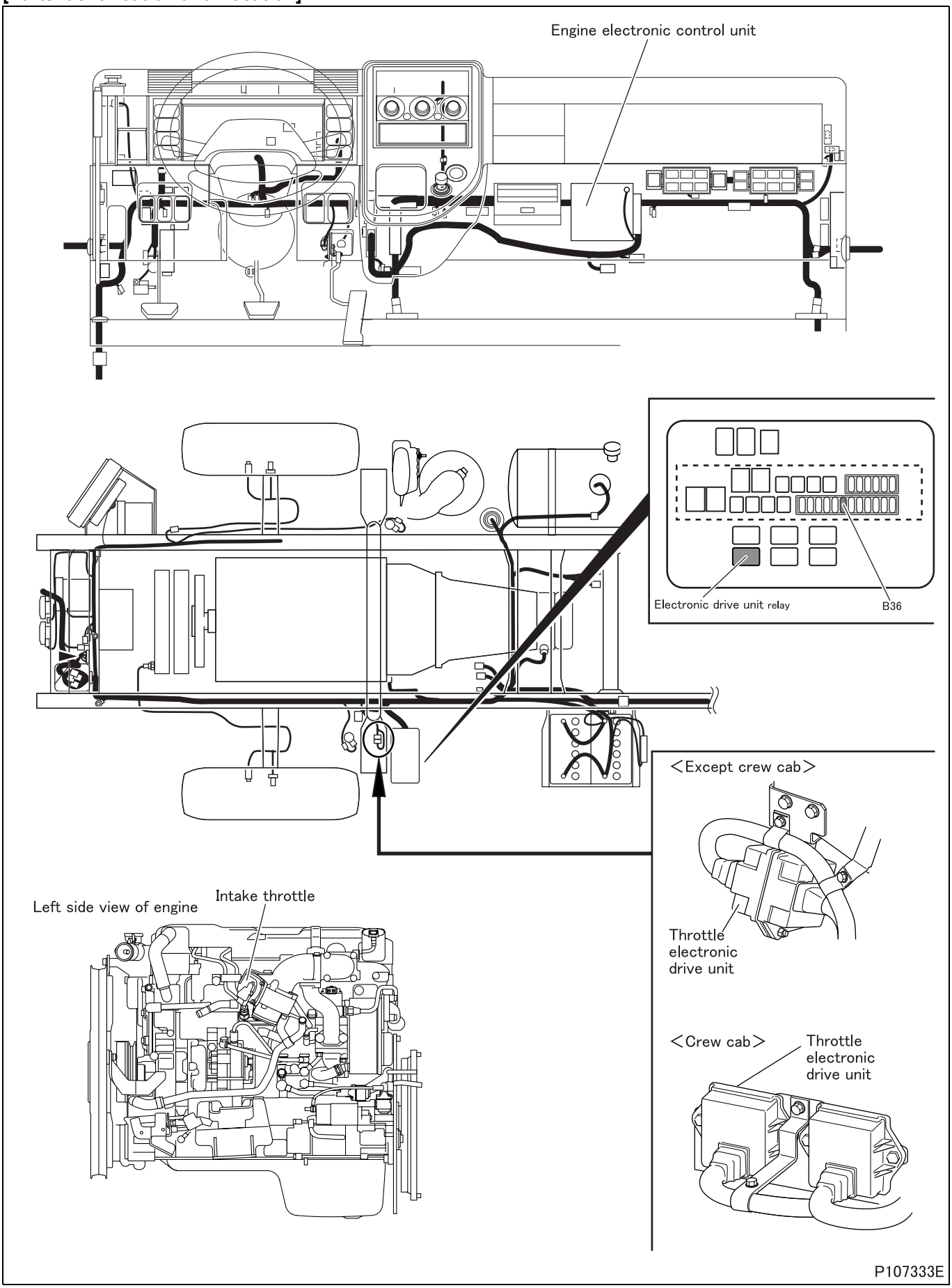

[Fault diagnosis]

- Perform checks in the sequence of the following steps.

Step 1	Inspection items		Inspection by control data
	Maintenance item		Perform actuator test item No. A3 “Intake Throttle 1”.
	Inspection condition		• Vehicle: stationary (vehicle speed 0 km/h {0 MPH}) • Starter switch: ON (engine started) • Transmission: neutral • Diagnosis switch: OFF (fuse removed)
	Requirements		Actual position matches with target value set by Multi-Use Tester (check with service data “53: Actual Intake Throttle Position”).
	Inspection result (Is the judging standard satisfied?)	YES	Go to transient fault (See Gr00.).
		NO	Go to step 2.

Step 2	Inspection items		Inspection of electronic drive unit connector
	Maintenance item		Inspection of connector
	Inspection condition		–
	Requirements		• Connector is properly connected. • No trace of water entry is found. • No corrosion is found in terminal. • Connection to terminal is appropriate.
	Inspection result (Is the judging standard satisfied?)	YES	Go to step 3.
		NO	Modify connector.

Step 3	Inspection items		Inspection of throttle actuator connector
	Maintenance item		Inspection of connector
	Inspection condition		–
	Requirements		• Connector is properly connected. • No trace of water entry is found. • No corrosion is found in terminal. • Connection to terminal is appropriate.
	Inspection result (Is the judging standard satisfied?)	YES	Go to step 4.
		NO	Modify connector.

Step 4	Inspection items		Inspection by control data
	Maintenance item		Check if following diagnosis codes occur simultaneously. • P0685 “EDU Relay (Open)” • P0686 “EDU Relay (Low)” • P0687 “EDU Relay (High)”
	Inspection condition		Starter switch: ON
	Requirements		Codes occur.
	Inspection result (Is the judging standard satisfied?)	YES	Inspect diagnosis code that is occurring.
		NO	Go to step 5.

Step 5	Inspection items		Inspection of electronic drive unit connector (power supply)
	Maintenance item		Measure value of voltage between connector terminal No. 13 (+) and 14 (–).
	Inspection condition		• Disconnect connector and measure from harness side. • Starter switch: ON • Perform actuator test item No. AF “EDU Relay”.
	Requirements		Same as battery voltage.
	Inspection result (Is the judging standard satisfied?)	YES	Go to step 10.
		NO	Go to step 6.

Step 6	Inspection items		Inspection of relay connector
	Maintenance item		Inspection of connector
	Inspection condition		–
	Requirements		• Connector is properly connected. • No trace of water entry is found. • No corrosion is found in terminal. • Connection to terminal is appropriate.
	Inspection result (Is the judging standard satisfied?)	YES	Go to step 7.
		NO	Modify connector.

Step 7	Inspection items		Inspection of harness between fuse and relay
	Maintenance item		Check circuit between fuse No. B35 and relay connector terminal No. 5.
	Inspection condition		Disconnect each device from harness and measure from connection side of harness connector.
	Requirements		There is continuity.
	Inspection result (Is the judging standard satisfied?)	YES	Go to step 8.
		NO	Modify harness.

Step 8	Inspection items		Inspection of harness between relay and electronic drive unit
	Maintenance item		Check circuit between relay connector terminal No. 4 and electronic drive unit connector terminal No. 13.
	Inspection condition		Disconnect each device from harness and measure from connection side of harness connector.
	Requirements		There is continuity.
	Inspection result (Is the judging standard satisfied?)	YES	After replacement of relay, go to step 9
		NO	Modify harness.

Step 9	Inspection items		Inspection of harness between electronic drive unit and ground
	Maintenance item		Check circuit between following electronic drive unit connector terminals. • Electronic drive unit ground: terminal No. 14 - chassis ground • Sensor ground: terminal No. 4 and 14
	Inspection condition		Disconnect each device from harness and measure from connection side of harness connector.
	Requirements		There is continuity.
	Inspection result (Is the judging standard satisfied?)	YES	Go to step 10.
		NO	Modify harness.

Step 10	Inspection items		Inspection of electronic drive unit connector (motor)
	Maintenance item		Measure value of resistance between connector terminal No. 10 and 11.
	Inspection condition		Disconnect connector and measure from harness side.
	Requirements		0.3 to 80 Ω
	Inspection result (Is the judging standard satisfied?)	YES	Go to step 13.
		NO	Go to step 11.

Step 11	Inspection items		Inspection of harness between electronic drive unit and throttle actuator (motor)
	Maintenance item		Check circuit between following connector terminals. • Motor (1): electronic drive unit connector terminal No. 10 - throttle actuator connector terminal No. 6 • Motor (2): electronic drive unit connector terminal No. 11 - throttle actuator connector terminal No. 5
	Inspection condition		Disconnect each device from harness and measure from connection side of harness connector.
	Requirements		There is continuity.
	Inspection result (Is the judging standard satisfied?)	YES	Go to step 12.
		NO	Modify harness.

Step 12	Inspection items		Inspection of throttle actuator unit (motor)
	Maintenance item		Measure value of resistance between connector terminal No. 5 and 6.
	Inspection condition		• Keep throttle actuator installed on vehicle. • Disconnect connector and measure throttle actuator side.
	Requirements		0.3 to 80 Ω
	Inspection result (Is the judging standard satisfied?)	YES	Go to step 13.
		NO	Replacement of throttle actuator

<Step 12 inspection diagram>

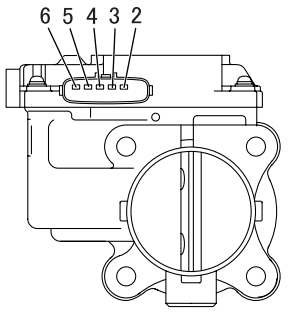

Step 13	Inspection items		Inspection of throttle actuator connector (position sensor: power supply)
	Maintenance item		Measure value of voltage between connector terminal No. 2 (+) and 4 (–).
	Inspection condition		• Measure from back side of harness connector with each device connected to harness. • Starter switch: ON
	Requirements		5 V
	Inspection result (Is the judging standard satisfied?)	YES	Go to step 14.
		NO	Go to step 15.

Step 14	Inspection items		Inspection of electronic drive unit connector (position sensor: signal)
	Maintenance item		Measure value of voltage between connector terminal No. 3 (+) and 4 (–).
	Inspection condition		• Measure from back side of harness connector with each device connected to harness. • Starter switch: ON • Perform actuator test item No. A3 “Intake Throttle 1”.
	Requirements		• Valve fully closed: 0.5 V • Valve fully opened: 4.375 V
	Inspection result (Is the judging standard satisfied?)	YES	Go to step 16.
		NO	Go to step 15.

Step 15	Inspection items		Inspection of harness between electronic drive unit and throttle actuator (position sensor)
	Maintenance item		Check circuit between following connector terminals. • Sensor (power supply): electronic drive unit connector terminal No. 2 - throttle actuator connector terminal No. 2 • Sensor (signal): electronic drive unit connector terminal No. 3 - throttle actuator connector terminal No. 3 • Sensor (ground): electronic drive unit connector terminal No. 4 - throttle actuator connector terminal No. 4
	Inspection condition		Disconnect each device from harness and measure from connection side of harness connector.
	Requirements		There is continuity.
	Inspection result (Is the judging standard satisfied?)	YES	After replacement of throttle actuator, go to step 16
		NO	Modify harness.

Step 16	Inspection items		Inspection by control data
	Maintenance item		Perform actuator test item No. A3 “Intake Throttle 1”.
	Inspection condition		• Vehicle: stationary (vehicle speed 0 km/h {0 MPH}) • Starter switch: ON (engine started) • Transmission: neutral • Diagnosis switch: OFF (fuse removed)
	Requirements		Actual position matches with target value set by Multi-Use Tester (check with service data “53: Actual Intake Throttle Position”).
	Inspection result (Is the judging standard satisfied?)	YES	Go to transient fault (See Gr00.).
		NO	Replacement of electronic drive unit

[Fault code]
Diagnosis code: P2102/Flash code: 28
[Monitor]
Failure of intake throttle system
[Fault (outline)]
Circuit check
[Diagnosis check]
- Throttle electronic drive unit monitors built in motor of intake throttle for circuit fault and sends fault information to engine electronic control unit through controller area network communication.
- Monitoring by throttle electronic drive unit is performed from internal current detection circuit.

[Code generation condition]
- Motor circuit remains short as detected by electronic drive unit for 2 seconds. (Warning lamp is lit and diagnosis code is displayed on third establishment of code generation condition.)

[Diagnosis check timing]
- Fault diagnosis is continuously performed during the driving cycle.

[Diagnostic requirement]
- Controller area network communication in order

[Control effected by electronic control unit during fault]
- Exhaust gas recirculation control is stopped.
- Throttle controls disabled
- Diesel particulate filter regeneration is stopped.
- Intake throttle actuator test is inhibited.
- Related fault check is stopped.

[Probable cause of trouble]
- Open-circuit or short-circuit of harness between electronic drive unit and throttle actuator
- Malfunction of each connector
- Malfunction of throttle motor (built in throttle actuator)
- Malfunction of throttle position sensor (built in throttle actuator)
- Malfunction of electronic drive unit
- Malfunction of electronic drive unit relay

[Recoverability]
- Recovered if signal becomes normal when starter switch is turned OFF to ON (power supply resumed to electronic control unit).
  (Warning lamp is extinguished and diagnosis code is cleared at fourth display of diagnosis code after recovery.)

[Electronic Control Unit Connection Diagram]

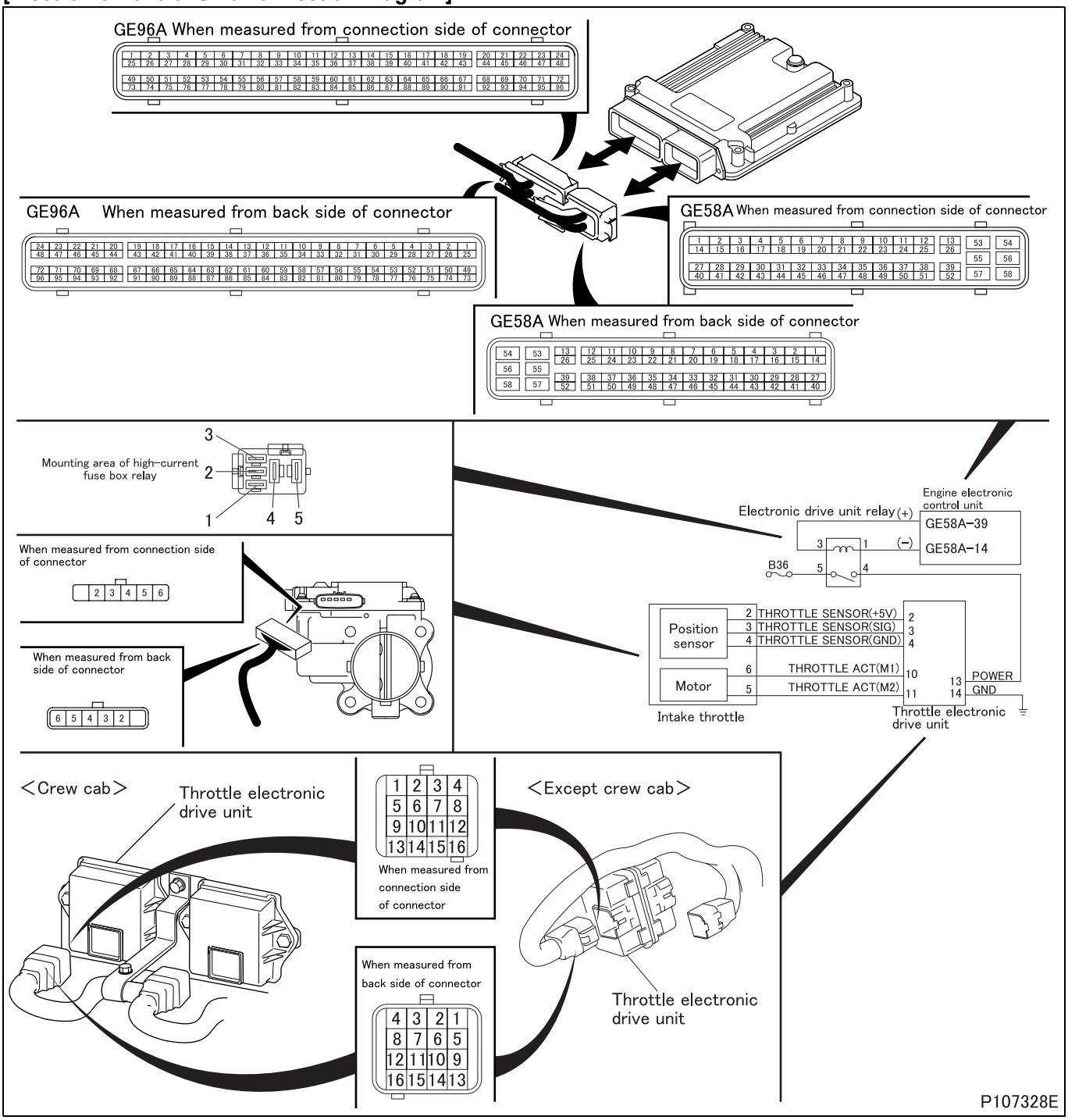

[Parts Identification and Location]

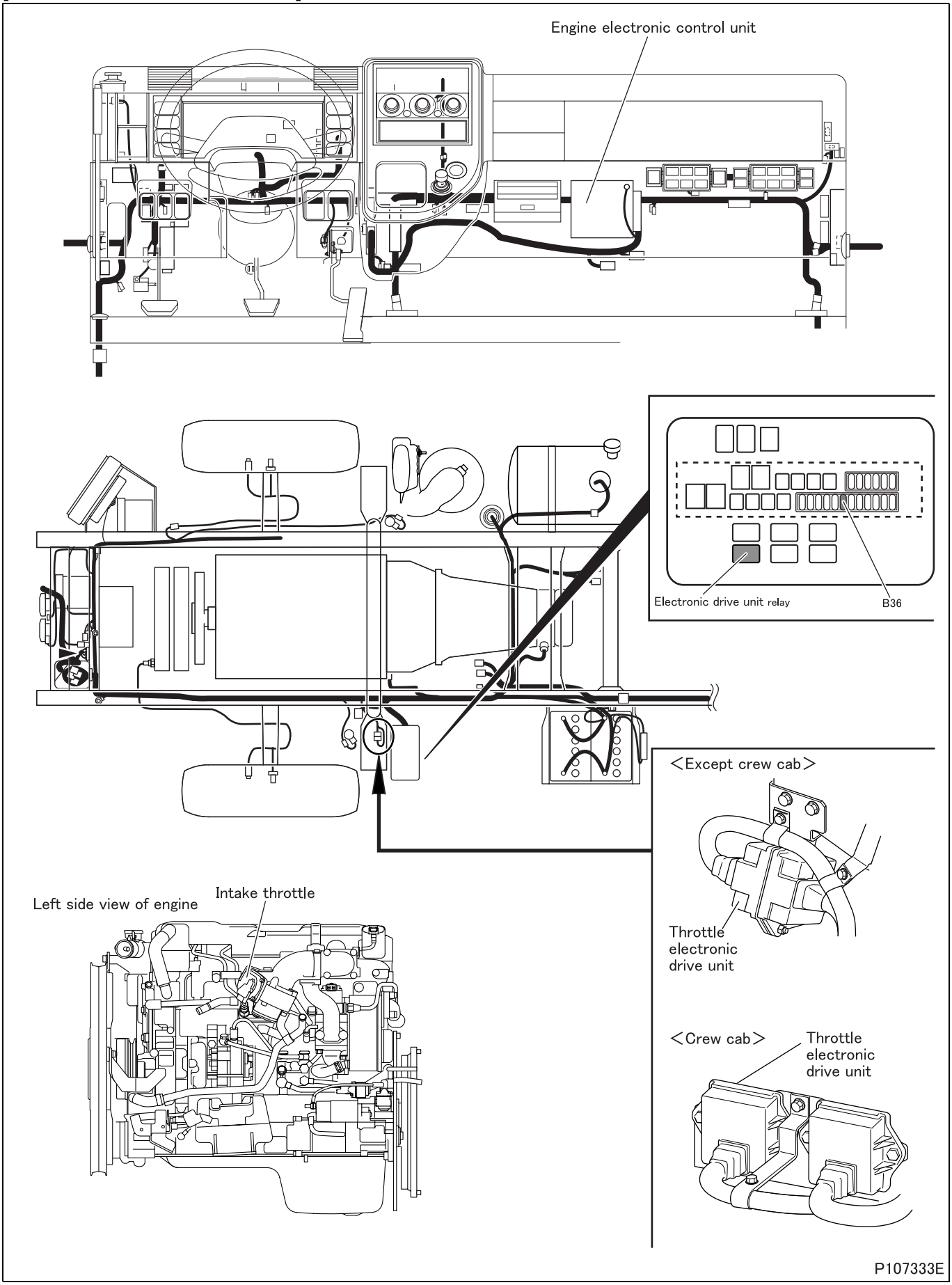

[Fault diagnosis]

- Perform checks in the sequence of the following steps.

Step 1	Inspection items		Inspection by control data
	Maintenance item		Perform actuator test item No. A3 “Intake Throttle 1”.
	Inspection condition		• Vehicle: stationary (vehicle speed 0 km/h {0 MPH}) • Starter switch: ON (engine started) • Transmission: neutral • Diagnosis switch: OFF (fuse removed)
	Requirements		Actual position matches with target value set by Multi-Use Tester (check with service data “53: Actual Intake Throttle Position”).
	Inspection result (Is the judging standard satisfied?)	YES	Go to transient fault (See Gr00.).
		NO	Go to step 2.

Step 2	Inspection items		Inspection of electronic drive unit connector
	Maintenance item		Inspection of connector
	Inspection condition		–
	Requirements		• Connector is properly connected. • No trace of water entry is found. • No corrosion is found in terminal. • Connection to terminal is appropriate.
	Inspection result (Is the judging standard satisfied?)	YES	Go to step 3.
		NO	Modify connector.

Step 3	Inspection items		Inspection of throttle actuator connector
	Maintenance item		Inspection of connector
	Inspection condition		–
	Requirements		• Connector is properly connected. • No trace of water entry is found. • No corrosion is found in terminal. • Connection to terminal is appropriate.
	Inspection result (Is the judging standard satisfied?)	YES	Go to step 4.
		NO	Modify connector.

Step 4	Inspection items		Inspection by control data
	Maintenance item		Check if following diagnosis codes occur simultaneously. • P0685 “EDU Relay (Open)” • P0686 “EDU Relay (Low)” • P0687 “EDU Relay (High)”
	Inspection condition		Starter switch: ON
	Requirements		Codes occur.
	Inspection result (Is the judging standard satisfied?)	YES	Inspect diagnosis code that is occurring.
		NO	Go to step 5.

Step 5	Inspection items		Inspection of electronic drive unit connector (power supply)
	Maintenance item		Measure value of voltage between connector terminal No. 13 (+) and 14 (–).
	Inspection condition		• Disconnect connector and measure from harness side. • Starter switch: ON • Perform actuator test item No. AF “EDU Relay”.
	Requirements		Same as battery voltage.
	Inspection result (Is the judging standard satisfied?)	YES	Go to step 10.
		NO	Go to step 6.

Step 6	Inspection items		Inspection of relay connector
	Maintenance item		Inspection of connector
	Inspection condition		–
	Requirements		• Connector is properly connected. • No trace of water entry is found. • No corrosion is found in terminal. • Connection to terminal is appropriate.
	Inspection result (Is the judging standard satisfied?)	YES	Go to step 7.
		NO	Modify connector.

Step 7	Inspection items		Inspection of harness between fuse and relay
	Maintenance item		Check circuit between fuse No. B35 and relay connector terminal No. 5.
	Inspection condition		Disconnect each device from harness and measure from connection side of harness connector.
	Requirements		There is continuity.
	Inspection result (Is the judging standard satisfied?)	YES	Go to step 8.
		NO	Modify harness.

Step 8	Inspection items		Inspection of harness between relay and electronic drive unit
	Maintenance item		Check circuit between relay connector terminal No. 4 and electronic drive unit connector terminal No. 13.
	Inspection condition		Disconnect each device from harness and measure from connection side of harness connector.
	Requirements		There is continuity.
	Inspection result (Is the judging standard satisfied?)	YES	After replacement of relay, go to step 9
		NO	Modify harness.

Step 9	Inspection items		Inspection of harness between electronic drive unit and ground
	Maintenance item		Check circuit between following electronic drive unit connector terminals. • Electronic drive unit ground: terminal No. 14 - chassis ground • Sensor ground: terminal No. 4 and 14
	Inspection condition		Disconnect each device from harness and measure from connection side of harness connector.
	Requirements		There is continuity.
	Inspection result (Is the judging standard satisfied?)	YES	Go to step 10.
		NO	Modify harness.

Step 10	Inspection items		Inspection of electronic drive unit connector (motor)
	Maintenance item		Measure value of resistance between connector terminal No. 10 and 11.
	Inspection condition		Disconnect connector and measure from harness side.
	Requirements		0.3 to 80 Ω
	Inspection result (Is the judging standard satisfied?)	YES	Go to step 13.
		NO	Go to step 11.

Step 11	Inspection items		Inspection of harness between electronic drive unit and throttle actuator (motor)
	Maintenance item		Check circuit between following connector terminals. • Motor (1): electronic drive unit connector terminal No. 10 - throttle actuator connector terminal No. 6 • Motor (2): electronic drive unit connector terminal No. 11 - throttle actuator connector terminal No. 5
	Inspection condition		Disconnect each device from harness and measure from connection side of harness connector.
	Requirements		There is continuity.
	Inspection result (Is the judging standard satisfied?)	YES	Go to step 12.
		NO	Modify harness.

Step 12	Inspection items		Inspection of throttle actuator unit (motor)
	Maintenance item		Measure value of resistance between connector terminal No. 5 and 6.
	Inspection condition		• Keep throttle actuator installed on vehicle. • Disconnect connector and measure throttle actuator side.
	Requirements		0.3 to 80 Ω
	Inspection result (Is the judging standard satisfied?)	YES	Go to step 13.
		NO	Replacement of throttle actuator

<Step 12 inspection diagram>

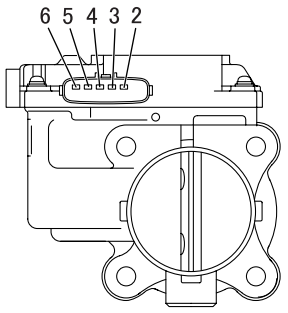

Step 13	Inspection items		Inspection of throttle actuator connector (position sensor: power supply)
	Maintenance item		Measure value of voltage between connector terminal No. 2 (+) and 4 (–).
	Inspection condition		• Measure from back side of harness connector with each device connected to harness. • Starter switch: ON
	Requirements		5 V
	Inspection result (Is the judging standard satisfied?)	YES	Go to step 14.
		NO	Go to step 15.

Step 14	Inspection items		Inspection of electronic drive unit connector (position sensor: signal)
	Maintenance item		Measure value of voltage between connector terminal No. 3 (+) and 4 (–).
	Inspection condition		• Measure from back side of harness connector with each device connected to harness. • Starter switch: ON • Perform actuator test item No. A3 “Intake Throttle 1”.
	Requirements		• Valve fully closed: 0.5 V • Valve fully opened: 4.375 V
	Inspection result (Is the judging standard satisfied?)	YES	Go to step 16.
		NO	Go to step 15.

Step 15	Inspection items		Inspection of harness between electronic drive unit and throttle actuator (position sensor)
	Maintenance item		Check circuit between following connector terminals. • Sensor (power supply): electronic drive unit connector terminal No. 2 - throttle actuator connector terminal No. 2 • Sensor (signal): electronic drive unit connector terminal No. 3 - throttle actuator connector terminal No. 3 • Sensor (ground): electronic drive unit connector terminal No. 4 - throttle actuator connector terminal No. 4
	Inspection condition		Disconnect each device from harness and measure from connection side of harness connector.
	Requirements		There is continuity.
	Inspection result (Is the judging standard satisfied?)	YES	After replacement of throttle actuator, go to step 16
		NO	Modify harness.

Step 16	Inspection items		Inspection by control data
	Maintenance item		Perform actuator test item No. A3 “Intake Throttle 1”.
	Inspection condition		• Vehicle: stationary (vehicle speed 0 km/h {0 MPH}) • Starter switch: ON (engine started) • Transmission: neutral • Diagnosis switch: OFF (fuse removed)
	Requirements		Actual position matches with target value set by Multi-Use Tester (check with service data “53: Actual Intake Throttle Position”).
	Inspection result (Is the judging standard satisfied?)	YES	Go to transient fault (See Gr00.).
		NO	Replacement of electronic drive unit

[Fault code]
Diagnosis code: P2108/Flash code: 28
[Monitor]
Failure of intake throttle system
[Fault (outline)]
Plausibility
[Diagnosis check]
- Degree of intake throttle butterfly valve opening is detected through position sensor as actual stop opening and compared with target opening for control by engine electronic control unit.

[Code generation condition]
- Target valve position calculated by engine electronic control unit remains out of specified limits (upper limit: 90 degrees, lower limit: 6 degrees) for 1 second. (Warning lamp is lit and diagnosis code is displayed on third establishment of code generation condition.)

[Diagnosis check timing]
- Fault diagnosis is continuously performed during the driving cycle.

[Diagnostic requirement]
- Controller area network communication in order

[Control effected by electronic control unit during fault]
- Exhaust gas recirculation control is stopped.
- Throttle controls disabled
- Diesel particulate filter regeneration is stopped.
- Intake throttle actuator test is inhibited.
- Related fault check is stopped.

[Probable cause of trouble]
- Open-circuit or short-circuit of harness between electronic drive unit and throttle actuator
- Malfunction of each connector
- Malfunction of throttle motor (built in throttle actuator)
- Malfunction of throttle position sensor (built in throttle actuator)
- Malfunction of electronic drive unit
- Malfunction of electronic drive unit relay

[Recoverability]
- Recovered if signal becomes normal when starter switch is turned OFF to ON (power supply resumed to electronic control unit).
  (Warning lamp is extinguished and diagnosis code is cleared at fourth display of diagnosis code after recovery.)

[Electronic Control Unit Connection Diagram]

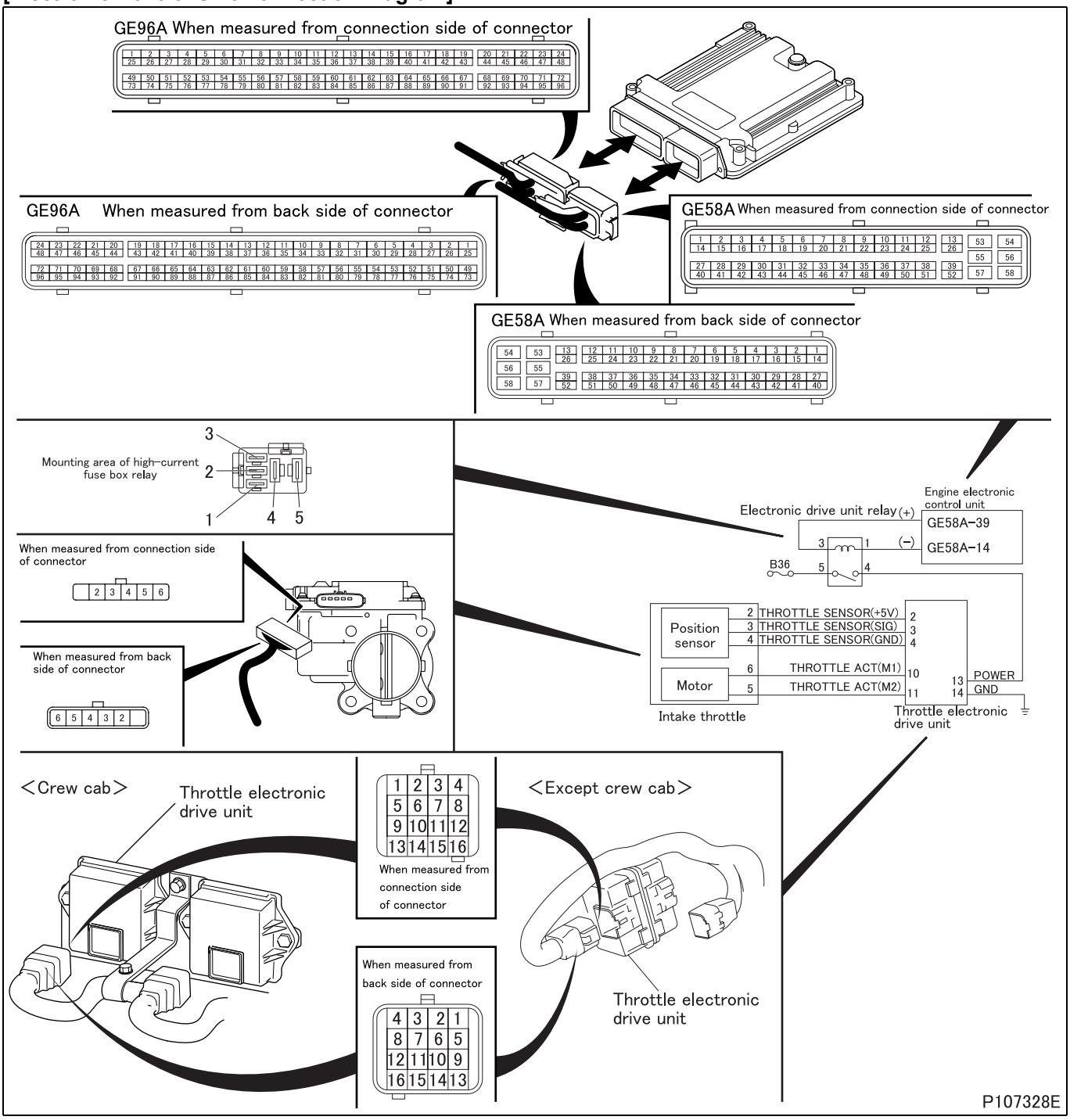

[Parts Identification and Location]

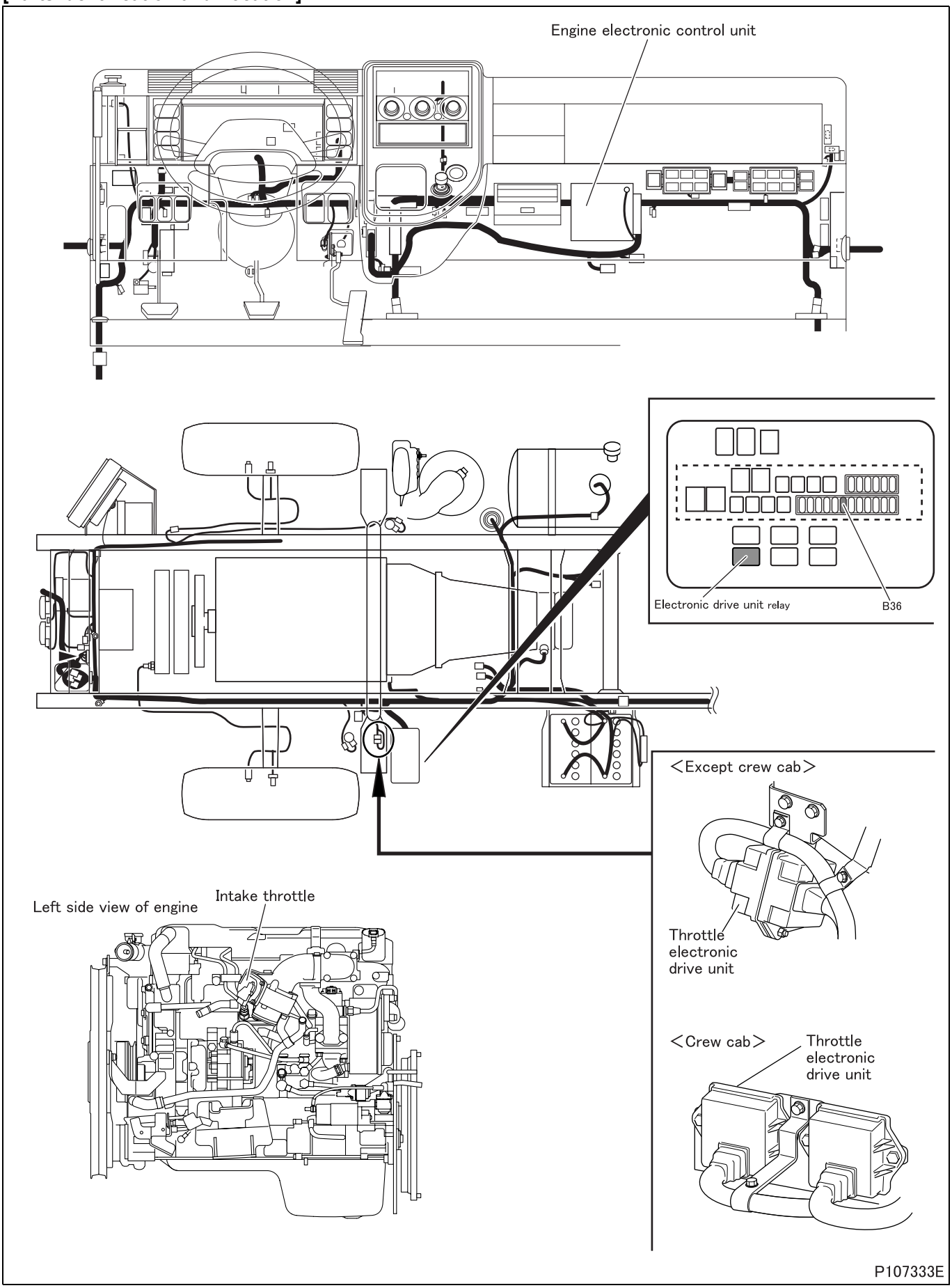

[Fault diagnosis]

- Perform checks in the sequence of the following steps.

Step 1	Inspection items		Inspection by control data
	Maintenance item		Perform actuator test item No. A3 “Intake Throttle 1”.
	Inspection condition		• Vehicle: stationary (vehicle speed 0 km/h {0 MPH}) • Starter switch: ON (engine started) • Transmission: neutral • Diagnosis switch: OFF (fuse removed)
	Requirements		Actual position matches with target value set by Multi-Use Tester (check with service data “53: Actual Intake Throttle Position”).
	Inspection result (Is the judging standard satisfied?)	YES	Go to transient fault (See Gr00.).
		NO	Go to step 2.

Step 2	Inspection items		Inspection of electronic drive unit connector
	Maintenance item		Inspection of connector
	Inspection condition		–
	Requirements		• Connector is properly connected. • No trace of water entry is found. • No corrosion is found in terminal. • Connection to terminal is appropriate.
	Inspection result (Is the judging standard satisfied?)	YES	Go to step 3.
		NO	Modify connector.

Step 3	Inspection items		Inspection of throttle actuator connector
	Maintenance item		Inspection of connector
	Inspection condition		–
	Requirements		• Connector is properly connected. • No trace of water entry is found. • No corrosion is found in terminal. • Connection to terminal is appropriate.
	Inspection result (Is the judging standard satisfied?)	YES	Go to step 4.
		NO	Modify connector.

Step 4	Inspection items		Inspection by control data
	Maintenance item		Check if following diagnosis codes occur simultaneously. • P0685 “EDU Relay (Open)” • P0686 “EDU Relay (Low)” • P0687 “EDU Relay (High)”
	Inspection condition		Starter switch: ON
	Requirements		Codes occur.
	Inspection result (Is the judging standard satisfied?)	YES	Inspect diagnosis code that is occurring.
		NO	Go to step 5.

Step 5	Inspection items		Inspection of electronic drive unit connector (power supply)
	Maintenance item		Measure value of voltage between connector terminal No. 13 (+) and 14 (–).
	Inspection condition		• Disconnect connector and measure from harness side. • Starter switch: ON • Perform actuator test item No. AF “EDU Relay”.
	Requirements		Same as battery voltage.
	Inspection result (Is the judging standard satisfied?)	YES	Go to step 10.
		NO	Go to step 6.

Step 6	Inspection items		Inspection of relay connector
	Maintenance item		Inspection of connector
	Inspection condition		–
	Requirements		• Connector is properly connected. • No trace of water entry is found. • No corrosion is found in terminal. • Connection to terminal is appropriate.
	Inspection result (Is the judging standard satisfied?)	YES	Go to step 7.
		NO	Modify connector.

Step 7	Inspection items		Inspection of harness between fuse and relay
	Maintenance item		Check circuit between fuse No. B35 and relay connector terminal No. 5.
	Inspection condition		Disconnect each device from harness and measure from connection side of harness connector.
	Requirements		There is continuity.
	Inspection result (Is the judging standard satisfied?)	YES	Go to step 8.
		NO	Modify harness.

Step 8	Inspection items		Inspection of harness between relay and electronic drive unit
	Maintenance item		Check circuit between relay connector terminal No. 4 and electronic drive unit connector terminal No. 13.
	Inspection condition		Disconnect each device from harness and measure from connection side of harness connector.
	Requirements		There is continuity.
	Inspection result (Is the judging standard satisfied?)	YES	After replacement of relay, go to step 9
		NO	Modify harness.

Step 9	Inspection items		Inspection of harness between electronic drive unit and ground
	Maintenance item		Check circuit between following electronic drive unit connector terminals. • Electronic drive unit ground: terminal No. 14 - chassis ground • Sensor ground: terminal No. 4 and 14
	Inspection condition		Disconnect each device from harness and measure from connection side of harness connector.
	Requirements		There is continuity.
	Inspection result (Is the judging standard satisfied?)	YES	Go to step 10.
		NO	Modify harness.

Step 10	Inspection items		Inspection of electronic drive unit connector (motor)
	Maintenance item		Measure value of resistance between connector terminal No. 10 and 11.
	Inspection condition		Disconnect connector and measure from harness side.
	Requirements		0.3 to 80 Ω
	Inspection result (Is the judging standard satisfied?)	YES	Go to step 13.
		NO	Go to step 11.

Step 11	Inspection items		Inspection of harness between electronic drive unit and throttle actuator (motor)
	Maintenance item		Check circuit between following connector terminals. • Motor (1): electronic drive unit connector terminal No. 10 - throttle actuator connector terminal No. 6 • Motor (2): electronic drive unit connector terminal No. 11 - throttle actuator connector terminal No. 5
	Inspection condition		Disconnect each device from harness and measure from connection side of harness connector.
	Requirements		There is continuity.
	Inspection result (Is the judging standard satisfied?)	YES	Go to step 12.
		NO	Modify harness.

Step 12	Inspection items		Inspection of throttle actuator unit (motor)
	Maintenance item		Measure value of resistance between connector terminal No. 5 and 6.
	Inspection condition		• Keep throttle actuator installed on vehicle. • Disconnect connector and measure throttle actuator side.
	Requirements		0.3 to 80 Ω
	Inspection result (Is the judging standard satisfied?)	YES	Go to step 13.
		NO	Replacement of throttle actuator

<Step 12 inspection diagram>

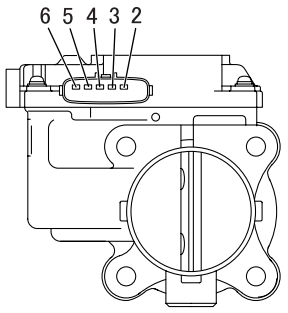

Step 13	Inspection items		Inspection of throttle actuator connector (position sensor: power supply)
	Maintenance item		Measure value of voltage between connector terminal No. 2 (+) and 4 (–).
	Inspection condition		• Measure from back side of harness connector with each device connected to harness. • Starter switch: ON
	Requirements		5 V
	Inspection result (Is the judging standard satisfied?)	YES	Go to step 14.
		NO	Go to step 15.

Step 14	Inspection items		Inspection of electronic drive unit connector (position sensor: signal)
	Maintenance item		Measure value of voltage between connector terminal No. 3 (+) and 4 (–).
	Inspection condition		• Measure from back side of harness connector with each device connected to harness. • Starter switch: ON • Perform actuator test item No. A3 “Intake Throttle 1”.
	Requirements		• Valve fully closed: 0.5 V • Valve fully opened: 4.375 V
	Inspection result (Is the judging standard satisfied?)	YES	Go to step 16.
		NO	Go to step 15.

Step 15	Inspection items		Inspection of harness between electronic drive unit and throttle actuator (position sensor)
	Maintenance item		Check circuit between following connector terminals. • Sensor (power supply): electronic drive unit connector terminal No. 2 - throttle actuator connector terminal No. 2 • Sensor (signal): electronic drive unit connector terminal No. 3 - throttle actuator connector terminal No. 3 • Sensor (ground): electronic drive unit connector terminal No. 4 - throttle actuator connector terminal No. 4
	Inspection condition		Disconnect each device from harness and measure from connection side of harness connector.
	Requirements		There is continuity.
	Inspection result (Is the judging standard satisfied?)	YES	After replacement of throttle actuator, go to step 16
		NO	Modify harness.

Step 16	Inspection items		Inspection by control data
	Maintenance item		Perform actuator test item No. A3 “Intake Throttle 1”.
	Inspection condition		• Vehicle: stationary (vehicle speed 0 km/h {0 MPH}) • Starter switch: ON (engine started) • Transmission: neutral • Diagnosis switch: OFF (fuse removed)
	Requirements		Actual position matches with target value set by Multi-Use Tester (check with service data “53: Actual Intake Throttle Position”).
	Inspection result (Is the judging standard satisfied?)	YES	Go to transient fault (See Gr00.).
		NO	Replacement of electronic drive unit

[Fault code]
Diagnosis code: P2120/Flash code: 65
[Monitor]
Failure of accelerator pedal switch
[Fault (outline)]
Plausibility
[Diagnosis check]
- Pedal depressing angle output from accelerator pedal position sensor is monitored for abnormality in ON/OFF status of accelerator switch.

[Code generation condition]
- Accelerator switch remains OFF for 1 second at 30% depression of accelerator pedal. (Diagnosis code is displayed on first establishment of code generation condition.)

[Diagnosis check timing]
- Fault diagnosis is continuously performed during the driving cycle.

[Diagnostic requirement]
–

[Control effected by electronic control unit during fault]
- Effects no special control.

[Probable cause of trouble]
- Open-circuit or short-circuit of harness between electronic control unit and accelerator pedal position sensor (switch)
- Malfunction of each connector
- Malfunction of accelerator pedal position sensor (switch)
- Malfunction of electronic control unit

[Recoverability]
- Recovered if signal becomes normal with starter switch in ON position.
  (Warning lamp and diagnosis code is cleared simultaneously with recovery.)

[Electronic Control Unit Connection Diagram]

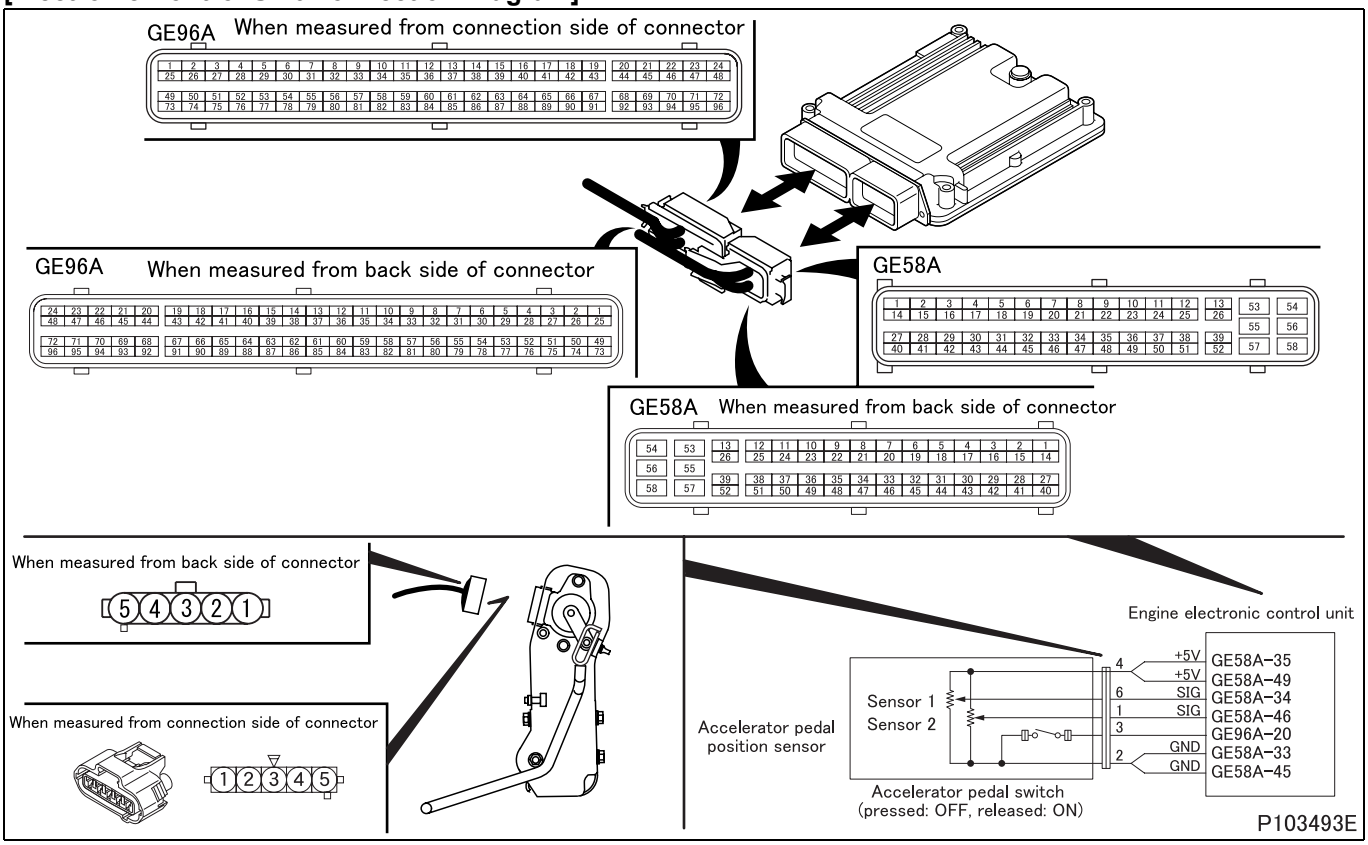

[Parts Identification and Location]

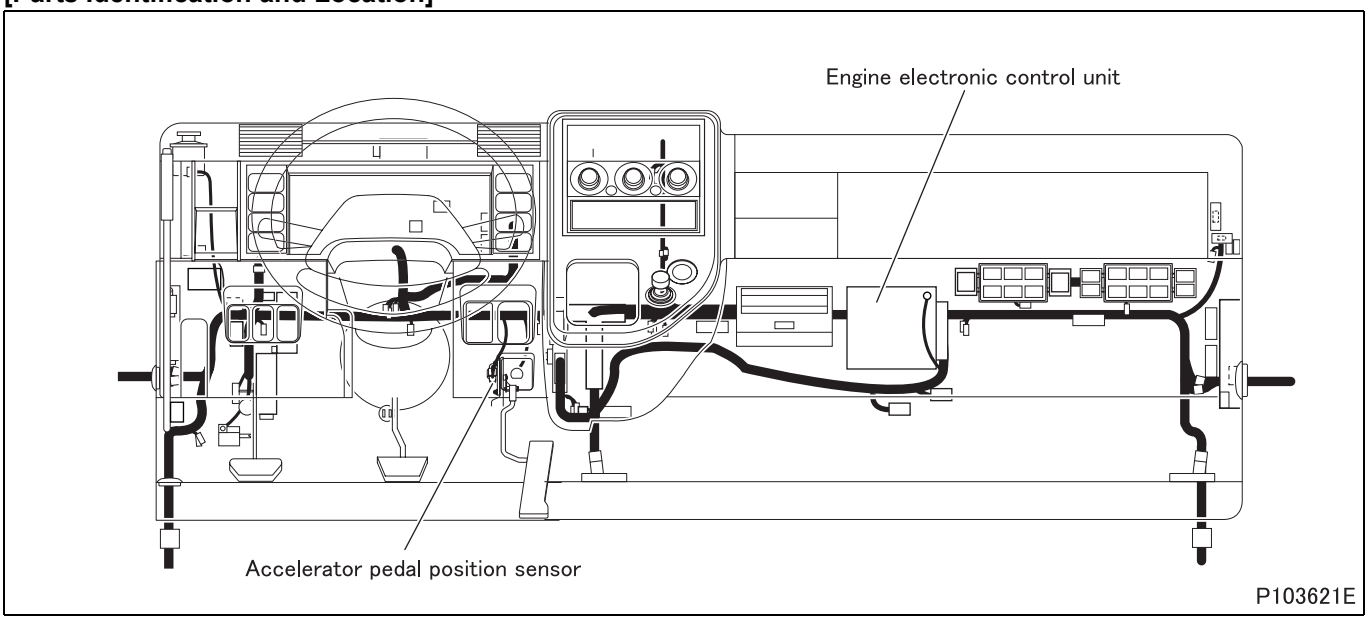

[Fault diagnosis]

- Perform checks in the sequence of the following steps.

Step 1	Inspection items		Inspection by control data
	Maintenance item		Measure item No. A2 “Accel SW” of Service Data.
	Inspection condition		–
	Requirements		• Accelerator pedal released: ON • Accelerator pedal pressed: OFF
	Inspection result (Is the judging standard satisfied?)	YES	Go to transient fault (See Gr00.).
		NO	Go to step 2.

Step 2	Inspection items		Inspection of electronic control unit connector
	Maintenance item		Inspection of connector
	Inspection condition		–
	Requirements		• Connector is properly connected. • No trace of water entry is found. • No corrosion is found in terminal. • Connection to terminal is appropriate.
	Inspection result (Is the judging standard satisfied?)	YES	Go to step 3.
		NO	Modify connector.

Step 3	Inspection items		Inspection of accelerator switch connector
	Maintenance item		Inspection of connector
	Inspection condition		–
	Requirements		• Connector is properly connected. • No trace of water entry is found. • No corrosion is found in terminal. • Connection to terminal is appropriate.
	Inspection result (Is the judging standard satisfied?)	YES	Go to step 4.
		NO	Modify connector.

Step 4	Inspection items		Inspection of accelerator switch unit
	Maintenance item		Check continuity between connector terminal No. 2 and 3.
	Inspection condition		Disconnect connector and measure switch side.
	Requirements		• Accelerator pedal released: There is continuity. • Accelerator pedal pressed: There is no continuity.
	Inspection result (Is the judging standard satisfied?)	YES	Go to step 5.
		NO	Adjustment of accelerator pedal position sensor

<Step 4 inspection diagram>

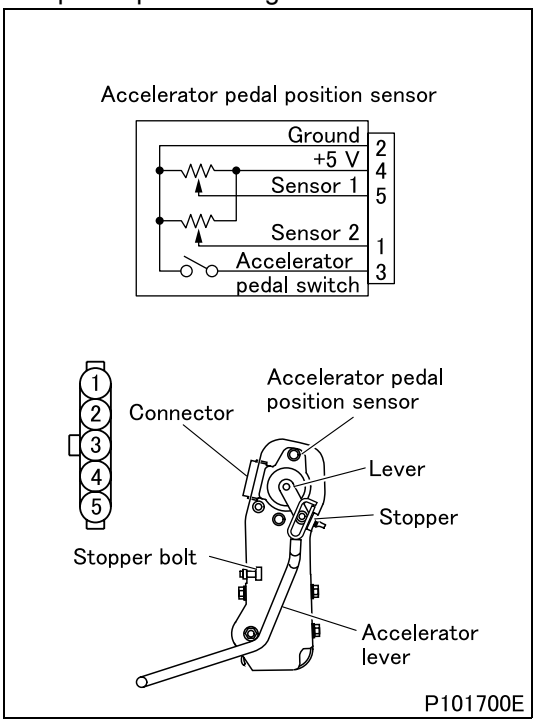

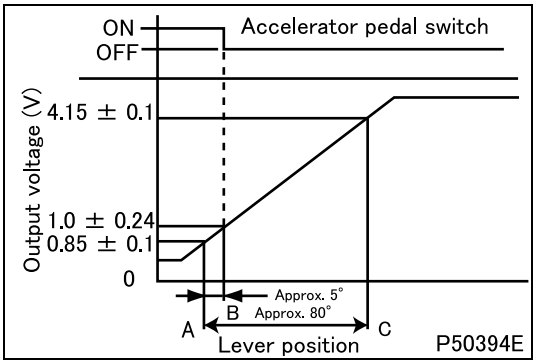

Step 5	Inspection items		Inspection of harness (power supply)
	Maintenance item		Check circuit between accelerator switch connector terminal No. 3 and electronic control unit connector (GE96A) terminal No. 20.
	Inspection condition		Disconnect each device from harness and measure from connection side of harness connector.
	Requirements		There is continuity.
	Inspection result (Is the judging standard satisfied?)	YES	Go to step 6.
		NO	Modify harness.

Step 6	Inspection items		Inspection of harness (ground)
	Maintenance item		Check circuit between accelerator switch connector terminal No. 2 and electronic control unit connector (GE58A) terminal No. 33 or 45.
	Inspection condition		Disconnect each device from harness and measure from connection side of harness connector.
	Requirements		There is continuity.
	Inspection result (Is the judging standard satisfied?)	YES	Go to step 7.
		NO	Modify harness.

Step 7	Inspection items		Inspection by control data
	Maintenance item		Measure item No. A2 “Accel SW” of Service Data.
	Inspection condition		–
	Requirements		• Accelerator pedal released: ON • Accelerator pedal pressed: OFF
	Inspection result (Is the judging standard satisfied?)	YES	Go to transient fault (See Gr00.).
		NO	Replacement of electronic control unit

[Fault code]
Diagnosis code: P2135/Flash code: 16, 24, 58
[Monitor]
Failure of accelerator pedal position sensors (1 and 2)
[Fault (outline)]
Gain and offset drift
[Diagnosis check]
- Difference in output voltage between accelerator pedal position sensors 1 and 2 is monitored for deviation from specified value.

[Code generation condition]
- Difference in output voltage between accelerator pedal position sensors 1 and 2 remains more than 10% out of specification for 6 seconds. (Warning lamp is lit and diagnosis code is displayed on first establishment of code generation condition.)

[Diagnosis check timing]
- Fault diagnosis is continuously performed during the driving cycle.

[Diagnostic requirement]
–

[Control effected by electronic control unit during fault]
Electronic control unit differs in the way of control by the diagnosis check item.
<Accelerator pedal position sensor 1>
- Accelerator pedal position sensor 2 is computed with accelerator pedal position sensor 1 only.
- In-use performance counter is stopped.
- Related fault check is stopped.

<Accelerator pedal position sensor 2>
- Accelerator pedal position sensor 1 is computed with accelerator pedal position sensor 2 only.
- In-use performance counter is stopped.
- Related fault check is stopped.

<Accelerator pedal position sensors 1 and 2>
- Related fault check is stopped.

[Probable cause of trouble]
- Open-circuit or short-circuit of harness between electronic control unit and sensor
- Malfunction of each connector
- Malfunction of sensor
- Malfunction of electronic control unit

[Recoverability]
- Recovered if signal becomes normal when starter switch is turned OFF to ON (power supply resumed to electronic control unit).
  (Warning lamp is extinguished and diagnosis code is cleared at fourth display of diagnosis code after recovery.)

[Electronic Control Unit Connection Diagram]

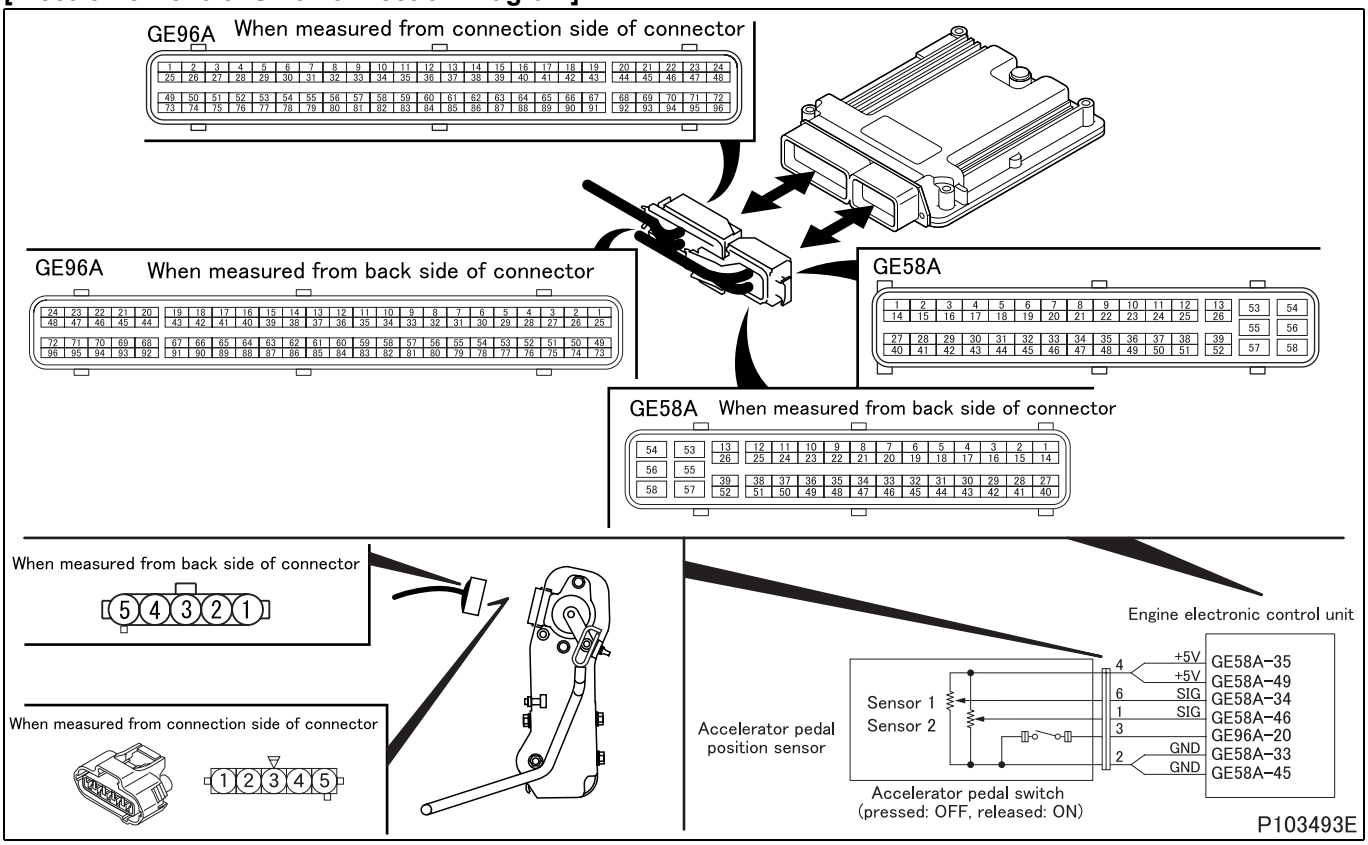

[Parts Identification and Location]

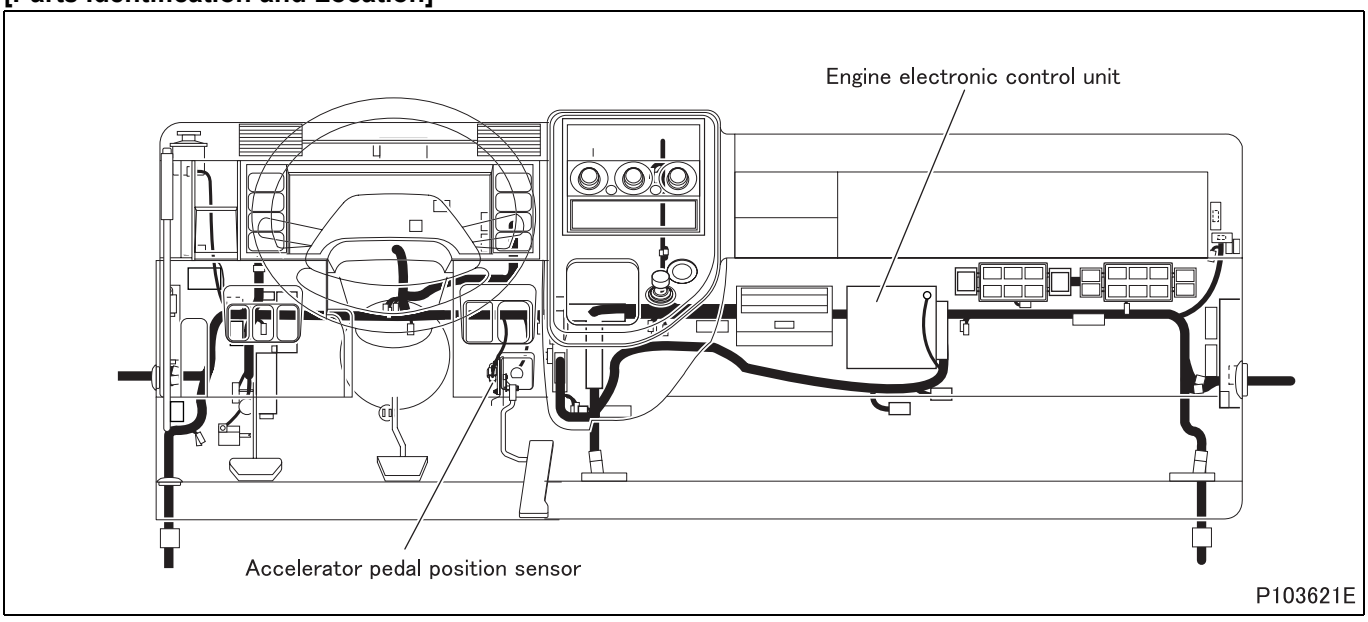

[Fault diagnosis]

- Perform checks in the sequence of the following steps.

Step 1	Inspection items		Inspection by control data
	Maintenance item		**<General Scanning Tool used>** Measurement of following service data • Sensor 1: Item “Accelerator Pedal Position 1” • Sensor 2: Item “Accelerator Pedal Position 2” **<Multi-Use Tester used>** Measurement of following service data • Sensor 1: Item No. 40 “Accelerator sensor voltage 1”. • Sensor 2: Item No. 41 “Accelerator sensor voltage 2”.
	Inspection condition		–
	Requirements		**<General Scanning Tool used>** • Accelerator pedal released: 0% • Accelerator pedal pressed: 100% **<Multi-Use Tester used>** • Accelerator pedal released: 0.85 ± 0.1 V • Accelerator pedal pressed: 4.15 ± 0.1 V
	Inspection result (Is the judging standard satisfied?)	YES	Go to transient fault (See Gr00.).
		NO	Go to step 2.

Step 2	Inspection items		Inspection by electronic control unit connector (signal)
	Maintenance item		Measure values of voltage between following connector (GE58A) terminals • Sensor 1: 34 (+) - 33 (–) • Sensor 2: 46 (+) - 45 (–)
	Inspection condition		• Measure from back side of harness connector with each device connected to harness. • Starter switch: ON
	Requirements		• Accelerator pedal released: 0.85 ± 0.1 V • Accelerator pedal pressed: 4.15 ± 0.1 V
	Inspection result (Is the judging standard satisfied?)	YES	Go to step 5.
		NO	Go to step 3.

Step 3	Inspection items		Inspection by electronic control unit connector (power supply)
	Maintenance item		Measure values of voltage between following connector (GE58A) terminals • Sensor 1: 35 (+) - 33 (–) • Sensor 2: 49 (+) - 45 (–)
	Inspection condition		• Measure from back side of harness connector with each device connected to harness. • Starter switch: ON
	Requirements		5 V
	Inspection result (Is the judging standard satisfied?)	YES	Go to step 4.
		NO	Go to step 5.

Step 4	Inspection items		Inspection by electronic control unit connector (ground)
	Maintenance item		Measure values of voltage between following connector (GE58A) terminals • Sensor 1: 33 (+) - 53 (–) • Sensor 2: 45 (+) - 53 (–)
	Inspection condition		• Measure from back side of harness connector with each device connected to harness. • Starter switch: ON
	Requirements		0 V
	Inspection result (Is the judging standard satisfied?)	YES	Go to step 6.
		NO	Go to step 5.

Step 5	Inspection items		Inspection of electronic control unit connector
	Maintenance item		Inspection of connector
	Inspection condition		–
	Requirements		• Connector is properly connected. • No trace of water entry is found. • No corrosion is found in terminal. • Connection to terminal is appropriate.
	Inspection result (Is the judging standard satisfied?)	YES	Go to step 12.
		NO	Modify connector.

Step 6	Inspection items		Inspection of sensor connector
	Maintenance item		Inspection of connector
	Inspection condition		–
	Requirements		• Connector is properly connected. • No trace of water entry is found. • No corrosion is found in terminal. • Connection to terminal is appropriate.
	Inspection result (Is the judging standard satisfied?)	YES	Go to step 7.
		NO	Modify connector.

Step 7	Inspection items		Inspection of sensor unit
	Maintenance item		Measure values of voltage between the following connector terminals. • Sensor 1: 5 (+) - 2 (–) • Sensor 2: 1 (+) - 2 (–)
	Inspection condition		Apply voltage DC 5 V across terminals No. 4 (+) and 2 (–).
	Requirements		• Idling position A: 0.85 ± 0.1 V • Accelerator switch operating position B: 1.0 ± 0.24 V • Full-load position C: 4.15 ± 0.1 V A: When accelerator lever is in contact with stopper B: When accelerator pedal is pressed until there is no continuity between terminals 2 and 3. C: When accelerator lever is in contact with full load stopper bolt
	Inspection result (Is the judging standard satisfied?)	YES	Go to step 8.
		NO	Adjustment of sensor

<Step 7 inspection diagram>

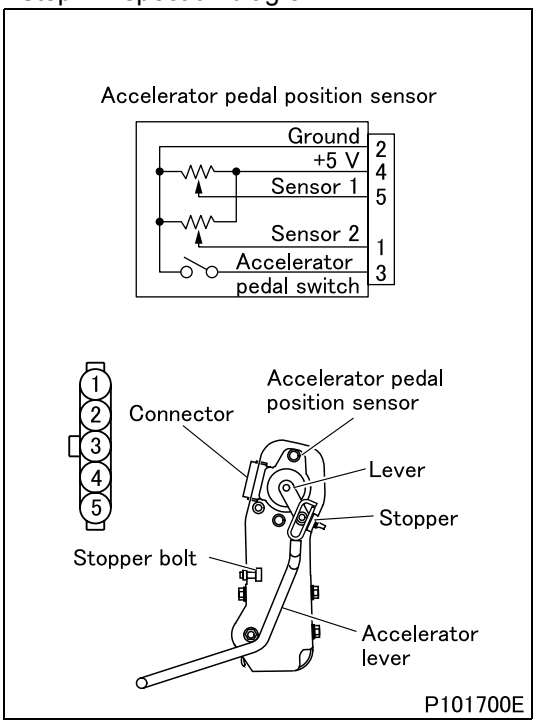

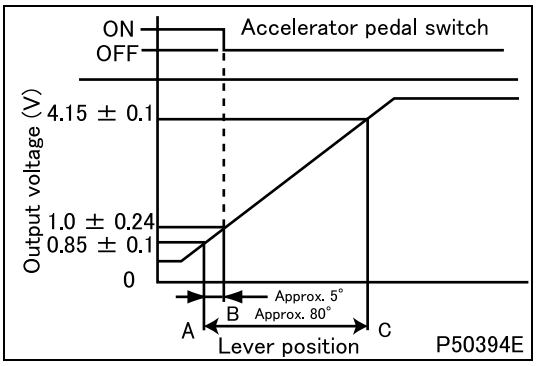

Step 8	Inspection items		Inspection of harness between electronic control unit and sensor (power supply)
	Maintenance item		Measure value of voltage between sensor connector terminal No. 4 (+) and 2 (–).
	Inspection condition		• Measure from back side of harness connector with each device connected to harness. • Starter switch: ON
	Requirements		5 V
	Inspection result (Is the judging standard satisfied?)	YES	Go to step 10.
		NO	Go to step 9.

Step 9	Inspection items		Inspection of harness between electronic control unit and sensor (power supply)
	Maintenance item		Check circuit between following connector terminals. • Sensor 1: sensor connector terminal No. 4 - electronic control unit connector (GE58A) terminal No. 35 • Sensor 2: sensor connector terminal No. 4 - electronic control unit connector (GE58A) terminal No. 49
	Inspection condition		Disconnect each device from harness and measure from connection side of harness connector.
	Requirements		There is continuity.
	Inspection result (Is the judging standard satisfied?)	YES	Go to step 12.
		NO	Modify harness.

Step 10	Inspection items		Inspection of harness between electronic control unit and sensor (ground)
	Maintenance item		Check circuit between following connector terminals. • Sensor 1: sensor connector terminal No. 2 - electronic control unit connector (GE58A) terminal No. 33 • Sensor 2: sensor connector terminal No. 2 - electronic control unit connector (GE58A) terminal No. 45
	Inspection condition		Disconnect each device from harness and measure from connection side of harness connector.
	Requirements		There is continuity.
	Inspection result (Is the judging standard satisfied?)	YES	Go to step 11.
		NO	Modify harness.

Step 11	Inspection items		Inspection of harness between electronic control unit and sensor (signal)
	Maintenance item		Check circuit between following connector terminals. • Sensor 1: sensor connector terminal No. 5 - electronic control unit connector (GE58A) terminal No. 34 • Sensor 2: sensor connector terminal No. 1 - electronic control unit connector (GE58A) terminal No. 46
	Inspection condition		Disconnect each device from harness and measure from connection side of harness connector.
	Requirements		There is continuity.
	Inspection result (Is the judging standard satisfied?)	YES	Go to step 12.
		NO	Modify harness.

Step 12	Inspection items		Inspection by control data
	Maintenance item		**<General Scanning Tool used>** Measurement of following service data • Sensor 1: Item “Accelerator Pedal Position 1” • Sensor 2: Item “Accelerator Pedal Position 2” **<Multi-Use Tester used>** Measurement of following service data • Sensor 1: Item No. 40 “Accelerator sensor voltage 1”. • Sensor 2: Item No. 41 “Accelerator sensor voltage 2”.
	Inspection condition		–
	Requirements		**<General Scanning Tool used>** • Accelerator pedal released: 0% • Accelerator pedal pressed: 100% **<Multi-Use Tester used>** • Accelerator pedal released: 0.85 ± 0.1 V • Accelerator pedal pressed: 4.15 ± 0.1 V
	Inspection result (Is the judging standard satisfied?)	YES	Go to transient fault (See Gr00.).
		NO	Replacement of electronic control unit

[Fault code]
Diagnosis code: P2138/Flash code: 58
[Monitor]
Failure of accelerator pedal position sensors (1 and 2)
[Fault (outline)]
- Low signal range check
- High signal range check
- Plausibility

[Diagnosis check]
- Status of accelerator pedal position sensor 1 and 2 is monitored for simultaneous fault.

[Code generation condition]
Diagnosis code is generated under either of the following conditions. (Warning lamp is lit and diagnosis code is displayed on first establishment of code generation condition.)
- Output signal error (high, low) in accelerator pedal position sensors 1 and 2
- Different errors in accelerator pedal position sensors 1 and 2
- Relative check error between accelerator pedal position sensors 1 and 2

[Diagnosis check timing]
- Fault diagnosis is continuously performed during the driving cycle.

[Diagnostic requirement]
–

[Control effected by electronic control unit during fault]
- Accelerator pedal position is computed with accelerator switch.
- Exhaust gas recirculation control is stopped.
- Throttle controls disabled
- Auto cruise control stopped
- Diesel particulate filter regeneration is stopped.
- Related fault check is stopped.

[Probable cause of trouble]
- Open-circuit or short-circuit of harness between electronic control unit and sensor
- Malfunction of each connector
- Malfunction of sensor
- Malfunction of electronic control unit

[Recoverability]
- Recovered if signal becomes normal when starter switch is turned OFF to ON (power supply resumed to electronic control unit).
  (Warning lamp is extinguished and diagnosis code is cleared simultaneously with recovery.)

[Electronic Control Unit Connection Diagram]

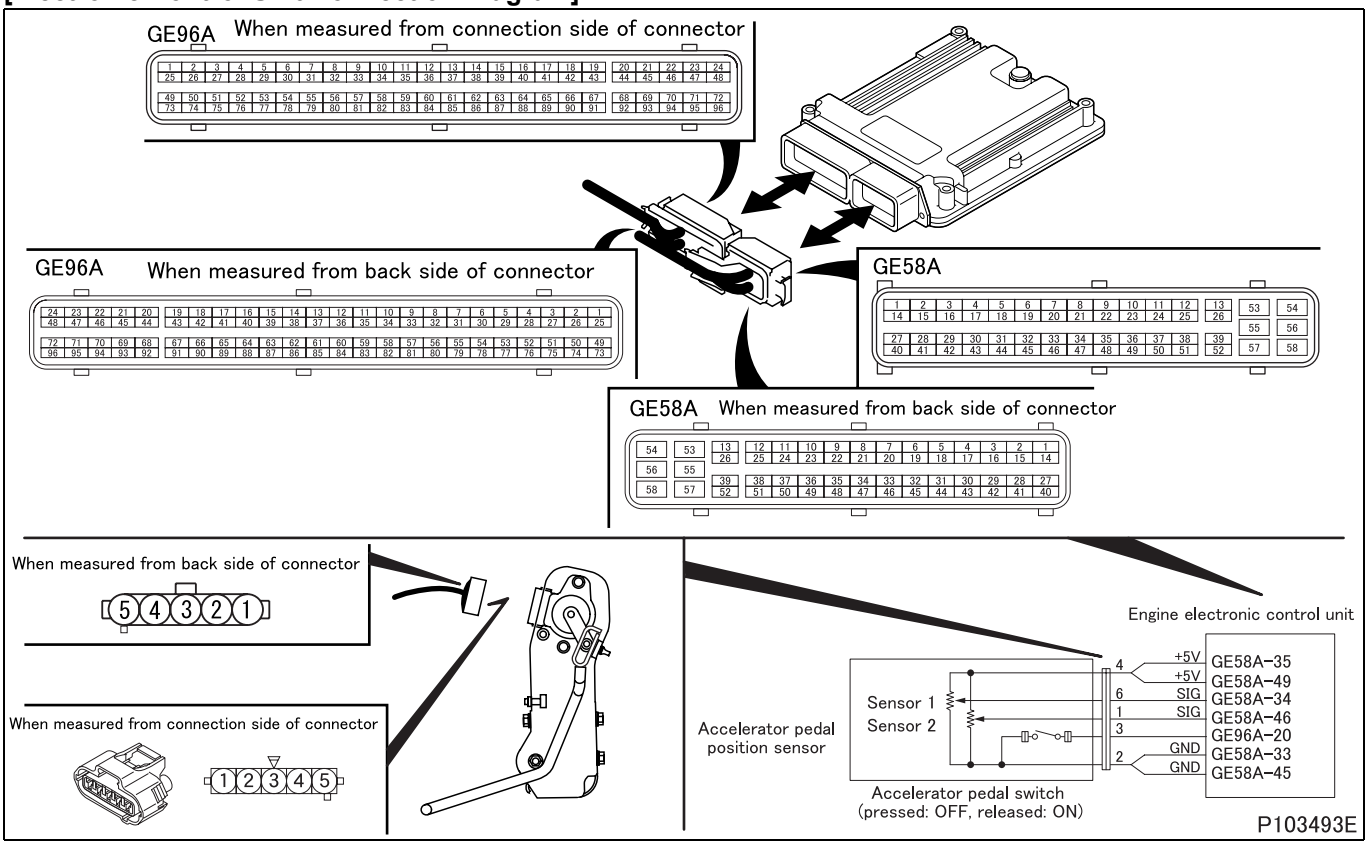

[Parts Identification and Location]

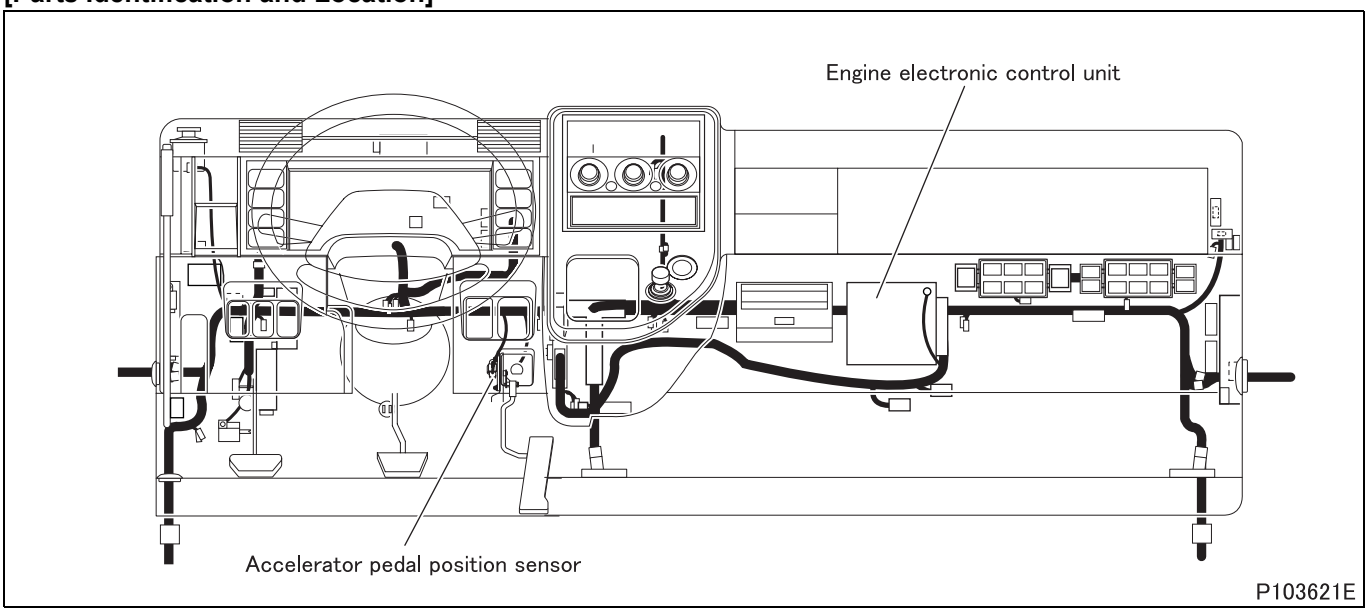

[Fault diagnosis]

- Perform checks in the sequence of the following steps.

Step 1	Inspection items		Inspection by control data
	Maintenance item		**<General Scanning Tool used>** Measurement of following service data • Sensor 1: Item “Accelerator Pedal Position 1” • Sensor 2: Item “Accelerator Pedal Position 2” **<Multi-Use Tester used>** Measurement of following service data • Sensor 1: Item No. 40 “Accelerator sensor voltage 1”. • Sensor 2: Item No. 41 “Accelerator sensor voltage 2”.
	Inspection condition		–
	Requirements		**<General Scanning Tool used>** • Accelerator pedal released: 0% • Accelerator pedal pressed: 100% **<Multi-Use Tester used>** • Accelerator pedal released: 0.85 ± 0.1 V • Accelerator pedal pressed: 4.15 ± 0.1 V
	Inspection result (Is the judging standard satisfied?)	YES	Go to transient fault (See Gr00.).
		NO	Go to step 2.

Step 2	Inspection items		Inspection by electronic control unit connector (signal)
	Maintenance item		Measure values of voltage between following connector (GE58A) terminals • Sensor 1: 34 (+) - 33 (–) • Sensor 2: 46 (+) - 45 (–)
	Inspection condition		• Measure from back side of harness connector with each device connected to harness. • Starter switch: ON
	Requirements		• Accelerator pedal released: 0.85 ± 0.1 V • Accelerator pedal pressed: 4.15 ± 0.1 V
	Inspection result (Is the judging standard satisfied?)	YES	Go to step 5.
		NO	Go to step 3.

Step 3	Inspection items		Inspection by electronic control unit connector (power supply)
	Maintenance item		Measure values of voltage between following connector (GE58A) terminals • Sensor 1: 35 (+) - 33 (–) • Sensor 2: 49 (+) - 45 (–)
	Inspection condition		• Measure from back side of harness connector with each device connected to harness. • Starter switch: ON
	Requirements		5 V
	Inspection result (Is the judging standard satisfied?)	YES	Go to step 4.
		NO	Go to step 5.

Step 4	Inspection items		Inspection by electronic control unit connector (ground)
	Maintenance item		Measure values of voltage between following connector (GE58A) terminals • Sensor 1: 33 (+) - 53 (–) • Sensor 2: 45 (+) - 53 (–)
	Inspection condition		• Measure from back side of harness connector with each device connected to harness. • Starter switch: ON
	Requirements		0 V
	Inspection result (Is the judging standard satisfied?)	YES	Go to step 6.
		NO	Go to step 5.

Step 5	Inspection items		Inspection of electronic control unit connector
	Maintenance item		Inspection of connector
	Inspection condition		–
	Requirements		• Connector is properly connected. • No trace of water entry is found. • No corrosion is found in terminal. • Connection to terminal is appropriate.
	Inspection result (Is the judging standard satisfied?)	YES	Go to step 12.
		NO	Modify connector.

Step 6	Inspection items		Inspection of sensor connector
	Maintenance item		Inspection of connector
	Inspection condition		–
	Requirements		• Connector is properly connected. • No trace of water entry is found. • No corrosion is found in terminal. • Connection to terminal is appropriate.
	Inspection result (Is the judging standard satisfied?)	YES	Go to step 7.
		NO	Modify connector.

Step 7	Inspection items		Inspection of sensor unit
	Maintenance item		Measure values of voltage between the following connector terminals. • Sensor 1: 5 (+) - 2 (–) • Sensor 2: 1 (+) - 2 (–)
	Inspection condition		Apply voltage DC 5 V across terminals No. 4 (+) and 2 (–).
	Requirements		• Idling position A: 0.85 ± 0.1 V • Accelerator switch operating position B: 1.0 ± 0.24 V • Full-load position C: 4.15 ± 0.1 V A: When accelerator lever is in contact with stopper B: When accelerator pedal is pressed until there is no continuity between terminals 2 and 3. C: When accelerator lever is in contact with full load stopper bolt
	Inspection result (Is the judging standard satisfied?)	YES	Go to step 8.
		NO	Adjustment of sensor

<Step 7 inspection diagram>

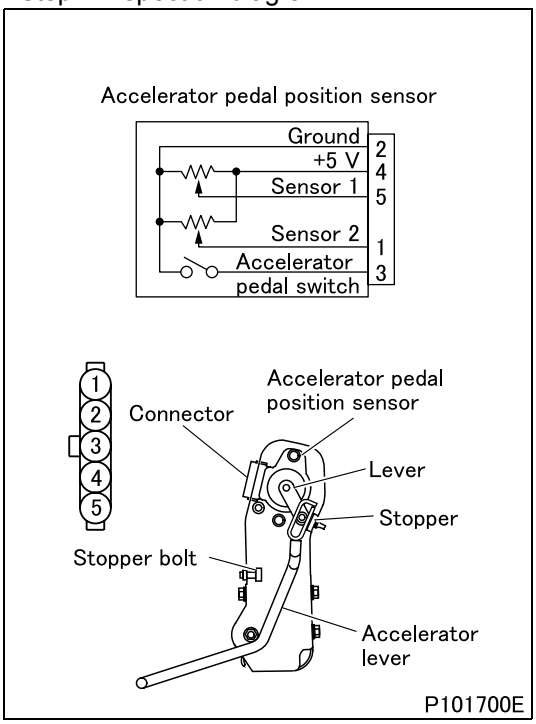

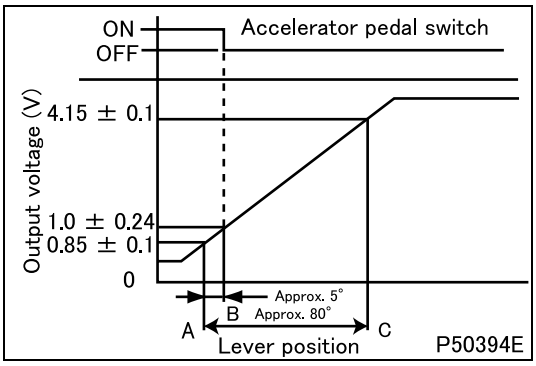

Step 8	Inspection items		Inspection of harness between electronic control unit and sensor (power supply)
	Maintenance item		Measure value of voltage between sensor connector terminal No. 4 (+) and 2 (–).
	Inspection condition		• Measure from back side of harness connector with each device connected to harness. • Starter switch: ON
	Requirements		5 V
	Inspection result (Is the judging standard satisfied?)	YES	Go to step 10.
		NO	Go to step 9.

Step 9	Inspection items		Inspection of harness between electronic control unit and sensor (power supply)
	Maintenance item		Check circuit between following connector terminals. • Sensor 1: sensor connector terminal No. 4 - electronic control unit connector (GE58A) terminal No. 35 • Sensor 2: sensor connector terminal No. 4 - electronic control unit connector (GE58A) terminal No. 49
	Inspection condition		Disconnect each device from harness and measure from connection side of harness connector.
	Requirements		There is continuity.
	Inspection result (Is the judging standard satisfied?)	YES	Go to step 12.
		NO	Modify harness.

Step 10	Inspection items		Inspection of harness between electronic control unit and sensor (ground)
	Maintenance item		Check circuit between following connector terminals. • Sensor 1: sensor connector terminal No. 2 - electronic control unit connector (GE58A) terminal No. 33 • Sensor 2: sensor connector terminal No. 2 - electronic control unit connector (GE58A) terminal No. 45
	Inspection condition		Disconnect each device from harness and measure from connection side of harness connector.
	Requirements		There is continuity.
	Inspection result (Is the judging standard satisfied?)	YES	Go to step 11.
		NO	Modify harness.

Step 11	Inspection items		Inspection of harness between electronic control unit and sensor (signal)
	Maintenance item		Check circuit between following connector terminals. • Sensor 1: sensor connector terminal No. 5 - electronic control unit connector (GE58A) terminal No. 34 • Sensor 2: sensor connector terminal No. 1 - electronic control unit connector (GE58A) terminal No. 46
	Inspection condition		Disconnect each device from harness and measure from connection side of harness connector.
	Requirements		There is continuity.
	Inspection result (Is the judging standard satisfied?)	YES	Go to step 12.
		NO	Modify harness.

Step 12	Inspection items		Inspection by control data
	Maintenance item		**<General Scanning Tool used>** Measurement of following service data • Sensor 1: Item “Accelerator Pedal Position 1” • Sensor 2: Item “Accelerator Pedal Position 2” **<Multi-Use Tester used>** Measurement of following service data • Sensor 1: Item No. 40 “Accelerator sensor voltage 1”. • Sensor 2: Item No. 41 “Accelerator sensor voltage 2”.
	Inspection condition		–
	Requirements		**<General Scanning Tool used>** • Accelerator pedal released: 0% • Accelerator pedal pressed: 100% **<Multi-Use Tester used>** • Accelerator pedal released: 0.85 ± 0.1 V • Accelerator pedal pressed: 4.15 ± 0.1 V
	Inspection result (Is the judging standard satisfied?)	YES	Go to transient fault (See Gr00.).
		NO	Replacement of electronic control unit

[Fault code]
Diagnosis code: P2147/Flash code: 82
[Monitor]
Injector magnetic valve
[Fault (outline)]
Injector short circuit (No.1 and 3 cylinders)
[Diagnosis check]
- Injector magnetic valve (No. 1, 3 cylinders) circuit is monitored for fault.

[Code generation condition]
- Injector magnetic valve (No. 1, 3 cylinders) circuit remains shorted to ground as detected for 3 consecutive cycles (Warning lamp is lit and diagnosis code is displayed on first establishment of code generation condition).

[Diagnosis check timing]
- Fault diagnosis is continuously performed during the driving cycle.

[Diagnostic requirement]
–

[Control effected by electronic control unit during fault]
- Injector magnetic valve (No. 1 and No. 4 cylinder) is stopped.
- Exhaust gas recirculation control is stopped.
- Throttle controls disabled
- Misfire detection is stopped.
- Auto cruise control stopped
- Diesel particulate filter regeneration is stopped.
- Injector actuator test is inhibited.
- Turbocharger actuator test is inhibited.
- Related fault check is stopped.

[Probable cause of trouble]
- Open-circuit or short-circuit of harness between electronic control unit and injector magnetic valve
- Malfunction of each connector
- Malfunction of injector magnetic valve
- Malfunction of electronic control unit

[Recoverability]
- Recovered if signal becomes normal when starter switch is turned OFF to ON (power supply resumed to electronic control unit).
  (Warning lamp is extinguished and diagnosis code is cleared at fourth display of diagnosis code after recovery.)

[Electronic Control Unit Connection Diagram]

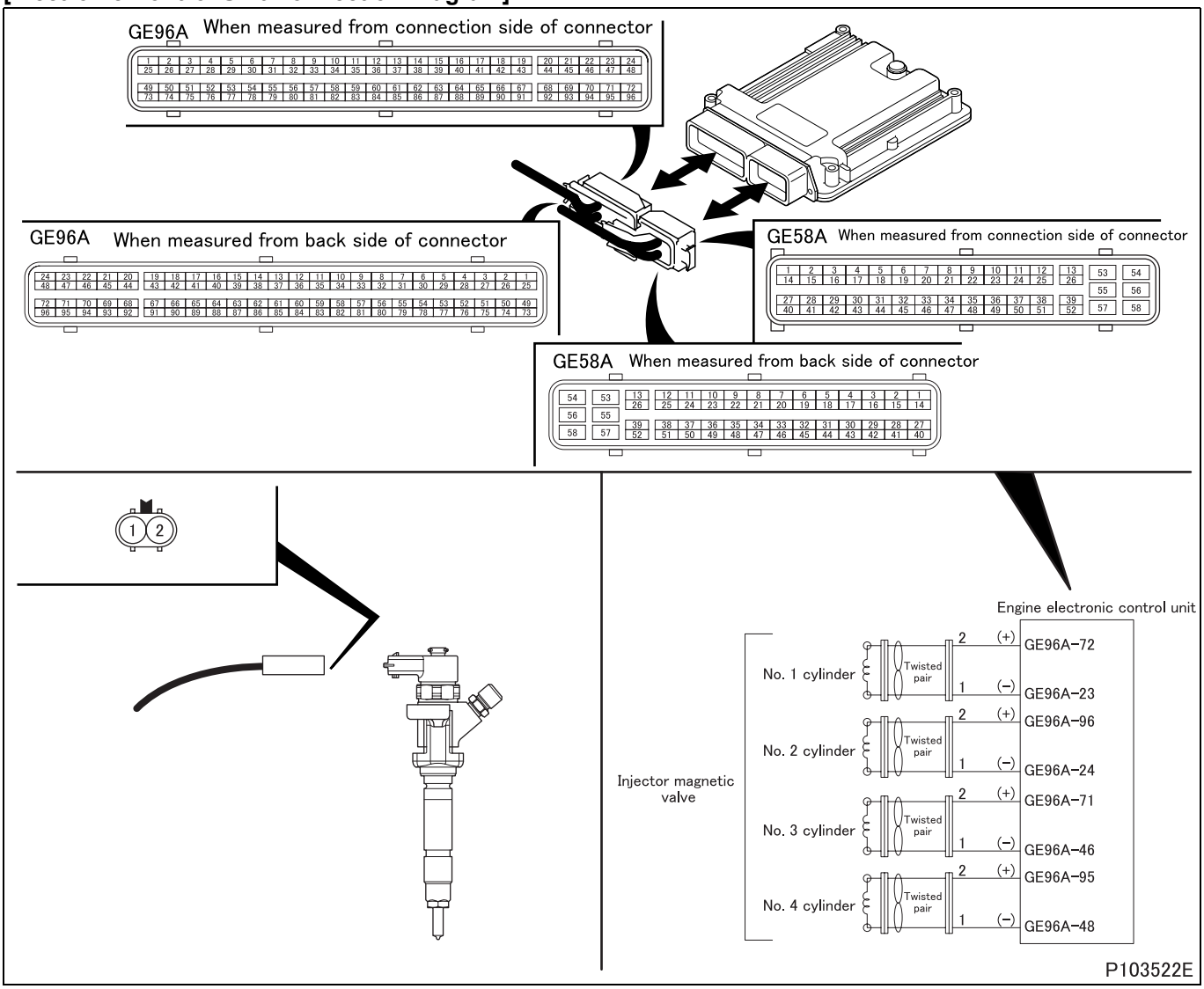

[Parts Identification and Location]

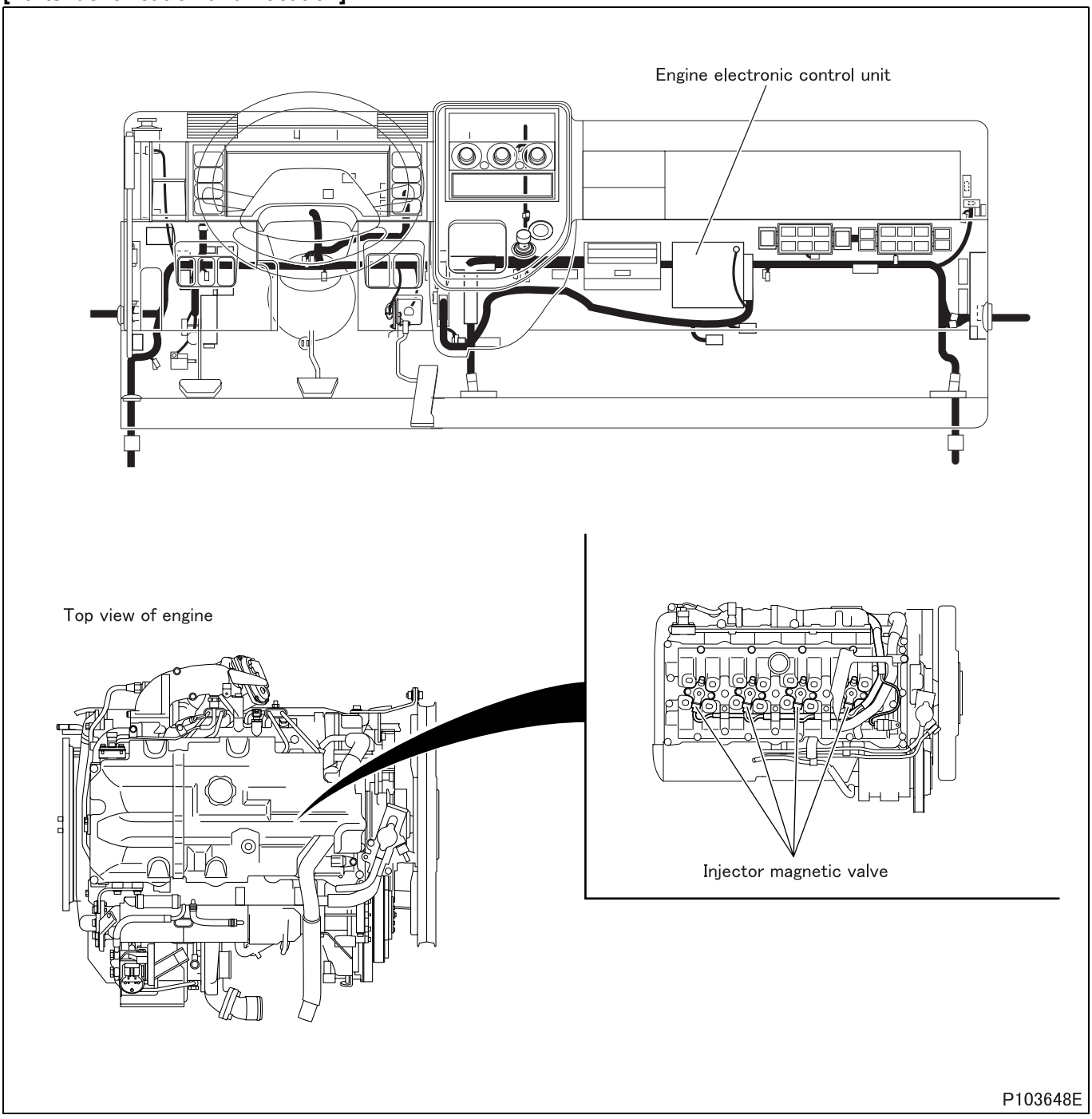

[Fault diagnosis]

- Perform checks in the sequence of the following steps.

Step 1	Inspection items		Inspection by control data
	Maintenance item		Perform following actuator test. • Injector magnetic valve (No. 1 cylinder): Perform item No. BB “Injector Test 1”. • Injector magnetic valve (No. 4 cylinder): Perform item No. BC “Injector Test 2”.
	Inspection condition		• Vehicle: stationary (vehicle speed 0 km/h {0 MPH}) • Engine speed: 1500 rpm or less • Transmission: neutral • The current diagnosis code does not occur.
	Requirements		Injector (No. 1 cylinder) or Injector (No. 3 cylinder) stops injection and engine vibrations become slightly larger.
	Inspection result (Is the judging standard satisfied?)	YES	Go to transient fault (See Gr00.).
		NO	Go to step 2.

Step 2	Inspection items		Inspection by electronic control unit connector
	Maintenance item		Measure values of resistance between following connector (GE96A) terminals • Injector magnetic valve (No. 1 cylinder): 72 (+) - 23 (–) • Injector magnetic valve (No. 3 cylinder): 71 (+) - 46 (–)
	Inspection condition		Disconnect electronic control unit from harness and measure from connection side of harness connector.
	Requirements		0.255 ± 0.04 Ω (20°C {68°F})
	Inspection result (Is the judging standard satisfied?)	YES	Go to step 3.
		NO	Go to step 4.

Step 3	Inspection items		Inspection of electronic control unit connector
	Maintenance item		Inspection of connector
	Inspection condition		–
	Requirements		• Connector is properly connected. • No trace of water entry is found. • No corrosion is found in terminal. • Connection to terminal is appropriate.
	Inspection result (Is the judging standard satisfied?)	YES	Go to step 8.
		NO	Modify connector.

Step 4	Inspection items		Inspection of injector magnetic valve connector
	Maintenance item		Inspection of connector
	Inspection condition		–
	Requirements		• Connector is properly connected. • Connection to terminal is appropriate.
	Inspection result (Is the judging standard satisfied?)	YES	Go to step 5.
		NO	Modify connector.

Step 5	Inspection items		Inspection of injector magnetic valve unit
	Maintenance item		Measure value of resistance between connector terminal No. 1 and 2.
	Inspection condition		–
	Requirements		0.255 ± 0.04 Ω (20°C {68°F})
	Inspection result (Is the judging standard satisfied?)	YES	Go to step 6.
		NO	Replacement of injector

<Step 5 inspection diagram>

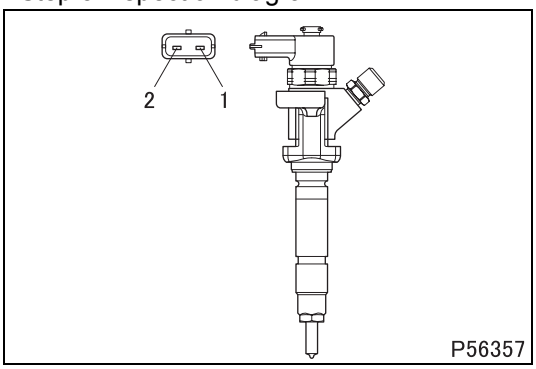

Step 6	Inspection items		Inspection of harness between injector magnetic valve and electronic control unit (power supply)
	Maintenance item		Check circuit between following connector terminals. • Injector magnetic valve (No. 1 cylinder): magnetic valve terminal No. 2 - electronic control unit (GE96A) terminal No. 72 • Injector magnetic valve (No. 3 cylinder): magnetic valve terminal No. 2 - electronic control unit (GE96A) terminal No. 71
	Inspection condition		Disconnect each device from harness and measure from connection side of harness connector.
	Requirements		There is continuity.
	Inspection result (Is the judging standard satisfied?)	YES	Go to step 7.
		NO	Modify harness.

Step 7	Inspection items		Inspection of harness between injector magnetic valve and electronic control unit (ground)
	Maintenance item		Check circuit between following connector terminals. • Injector magnetic valve (No. 1 cylinder): magnetic valve terminal No. 1 - electronic control unit (GE96A) terminal No. 23 • Injector magnetic valve (No. 3 cylinder): magnetic valve terminal No. 1 - electronic control unit (GE96A) terminal No. 46
	Inspection condition		Disconnect each device from harness and measure from connection side of harness connector.
	Requirements		There is continuity.
	Inspection result (Is the judging standard satisfied?)	YES	Go to step 8.
		NO	Modify harness.

Step 8	Inspection items		Inspection by control data
	Maintenance item		Perform following actuator test. • Injector magnetic valve (No. 1 cylinder): Perform item No. BB “Injector Test 1”. • Injector magnetic valve (No. 4 cylinder): Perform item No. BC “Injector Test 2”.
	Inspection condition		• Vehicle: stationary (vehicle speed 0 km/h {0 MPH}) • Engine speed: 1500 rpm or less • Transmission: neutral • The current diagnosis code does not occur.
	Requirements		Injector (No. 1 cylinder) or Injector (No. 3 cylinder) stops injection and engine vibrations become slightly larger.
	Inspection result (Is the judging standard satisfied?)	YES	Go to transient fault (See Gr00.).
		NO	Replacement of electronic control unit

[Fault code]
Diagnosis code: P2148/Flash code: 82
[Monitor]
Injector magnetic valve
[Fault (outline)]
Injector short circuit (No. 1 and 3 cylinders)
[Diagnosis check]
- Injector magnetic valve (No. 1, 3 cylinders) circuit is monitored for fault.

[Code generation condition]
- Injector magnetic valve (No. 1, 3 cylinders) circuit remains shorted to power supply as detected for 3 consecutive cycles (Warning lamp is lit and diagnosis code is displayed on first establishment of code generation condition).

[Diagnosis check timing]
- Fault diagnosis is continuously performed during the driving cycle.

[Diagnostic requirement]
–

[Control effected by electronic control unit during fault]
- Injector magnetic valve (No. 1 and No. 4 cylinder) is stopped.
- Exhaust gas recirculation control is stopped.
- Throttle controls disabled
- Misfire detection is stopped.
- Auto cruise control stopped
- Diesel particulate filter regeneration is stopped.
- Injector actuator test is inhibited.
- Turbocharger actuator test is inhibited.
- Related fault check is stopped.

[Probable cause of trouble]
- Open-circuit or short-circuit of harness between electronic control unit and injector magnetic valve
- Malfunction of each connector
- Malfunction of injector magnetic valve
- Malfunction of electronic control unit

[Recoverability]
- Recovered if signal becomes normal when starter switch is turned OFF to ON (power supply resumed to electronic control unit).
  (Warning lamp is extinguished and diagnosis code is cleared at fourth display of diagnosis code after recovery.)

[Electronic Control Unit Connection Diagram]

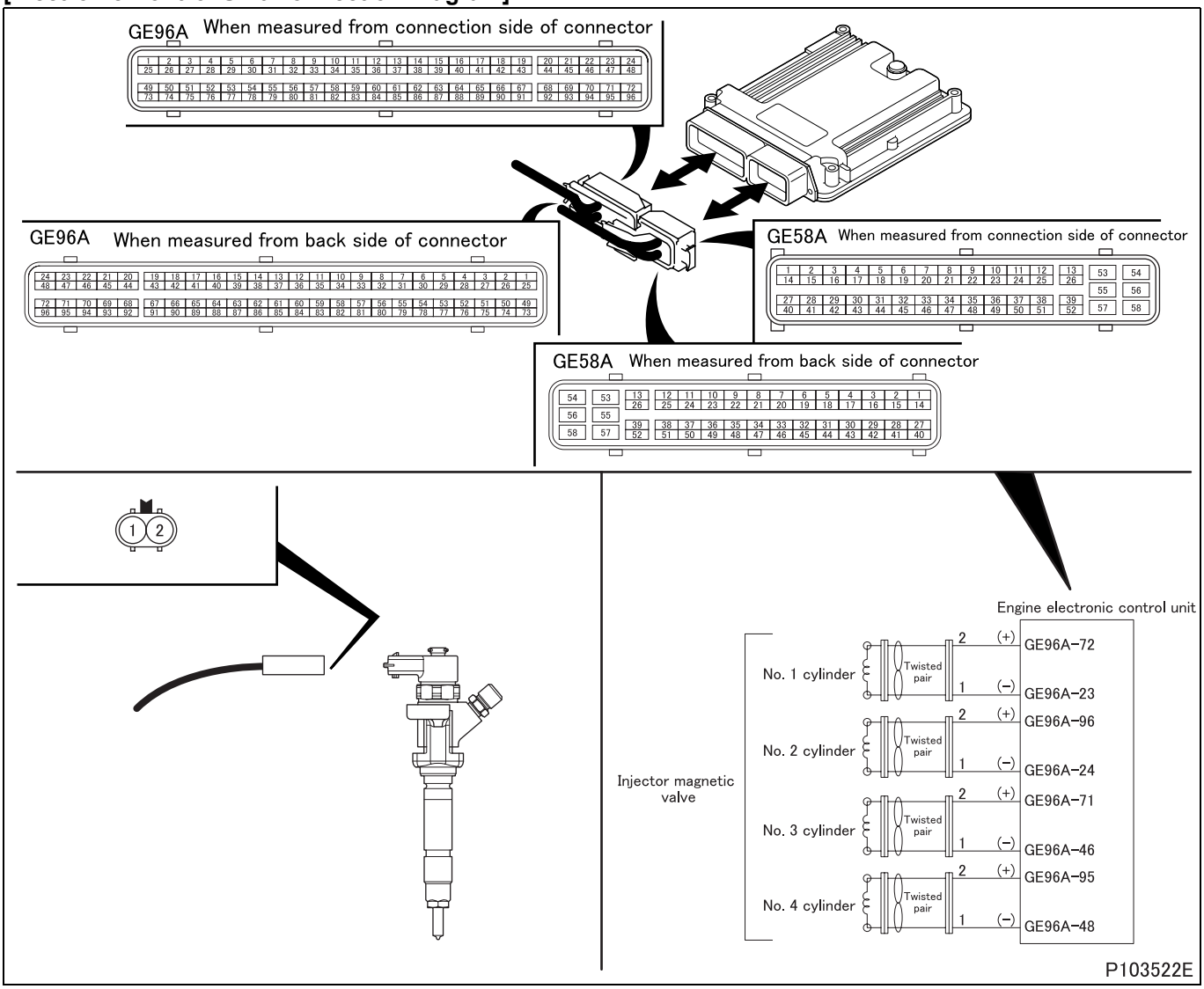

[Parts Identification and Location]

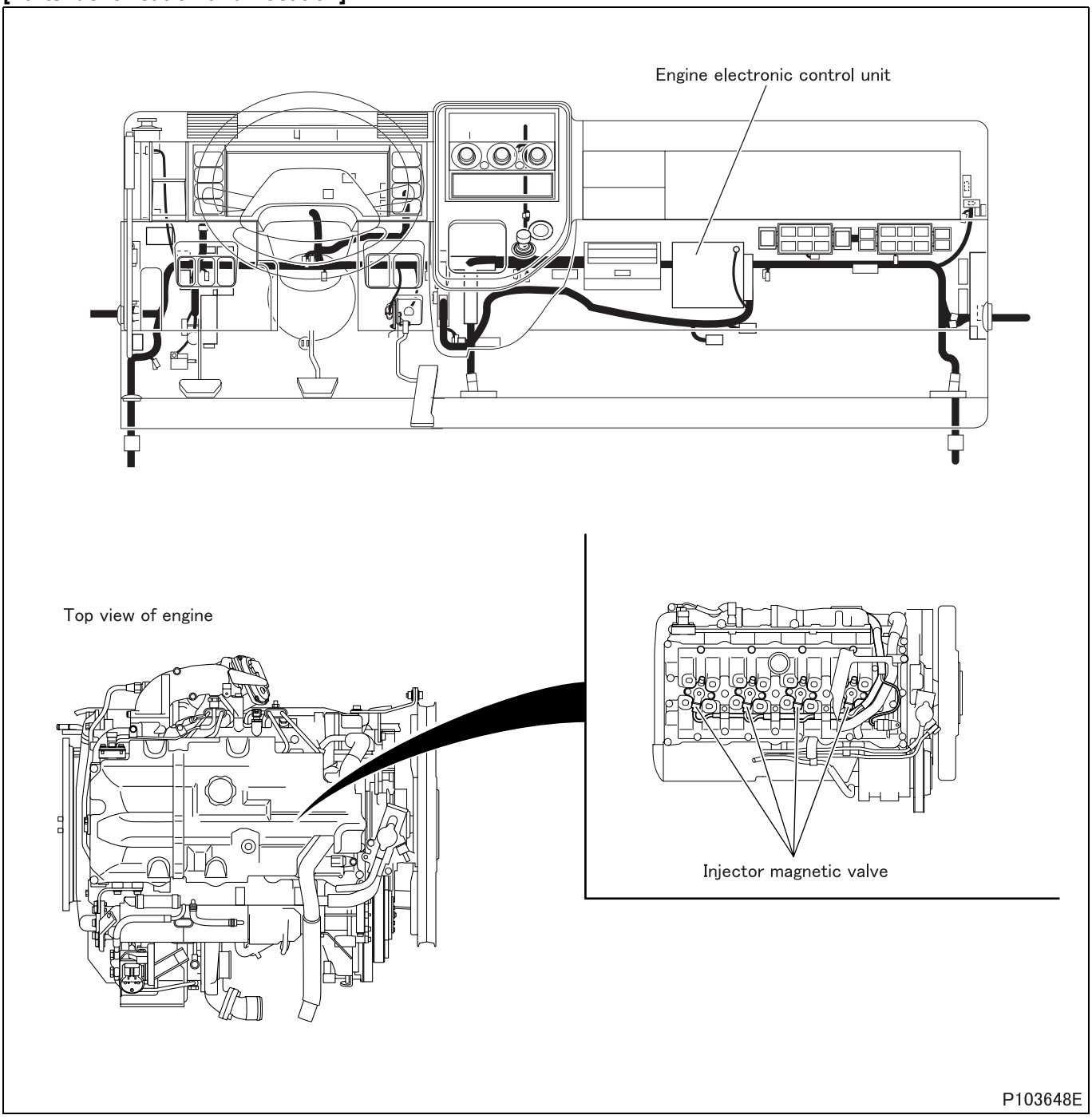

[Fault diagnosis]

- Perform checks in the sequence of the following steps.

Step 1	Inspection items		Inspection by control data
	Maintenance item		Perform following actuator test. • Injector magnetic valve (No. 1 cylinder): Perform item No. BB “Injector Test 1”. • Injector magnetic valve (No. 4 cylinder): Perform item No. BC “Injector Test 2”.
	Inspection condition		• Vehicle: stationary (vehicle speed 0 km/h {0 MPH}) • Engine speed: 1500 rpm or less • Transmission: neutral • The current diagnosis code does not occur.
	Requirements		Injector (No. 1 cylinder) or Injector (No. 3 cylinder) stops injection and engine vibrations become slightly larger.
	Inspection result (Is the judging standard satisfied?)	YES	Go to transient fault (See Gr00.).
		NO	Go to step 2.

Step 2	Inspection items		Inspection by electronic control unit connector
	Maintenance item		Measure values of resistance between following connector (GE96A) terminals • Injector magnetic valve (No. 1 cylinder): 72 (+) - 23 (–) • Injector magnetic valve (No. 3 cylinder): 71 (+) - 46 (–)
	Inspection condition		Disconnect electronic control unit from harness and measure from connection side of harness connector.
	Requirements		0.255 ± 0.04 Ω (20°C {68°F})
	Inspection result (Is the judging standard satisfied?)	YES	Go to step 3.
		NO	Go to step 4.

Step 3	Inspection items		Inspection of electronic control unit connector
	Maintenance item		Inspection of connector
	Inspection condition		–
	Requirements		• Connector is properly connected. • No trace of water entry is found. • No corrosion is found in terminal. • Connection to terminal is appropriate.
	Inspection result (Is the judging standard satisfied?)	YES	Go to step 8.
		NO	Modify connector.

Step 4	Inspection items		Inspection of injector magnetic valve connector
	Maintenance item		Inspection of connector
	Inspection condition		–
	Requirements		• Connector is properly connected. • Connection to terminal is appropriate.
	Inspection result (Is the judging standard satisfied?)	YES	Go to step 5.
		NO	Modify connector.

Step 5	Inspection items		Inspection of injector magnetic valve unit
	Maintenance item		Measure value of resistance between connector terminal No. 1 and 2.
	Inspection condition		–
	Requirements		0.255 ± 0.04 Ω (20°C {68°F})
	Inspection result (Is the judging standard satisfied?)	YES	Go to step 6.
		NO	Replacement of injector

<Step 5 inspection diagram>

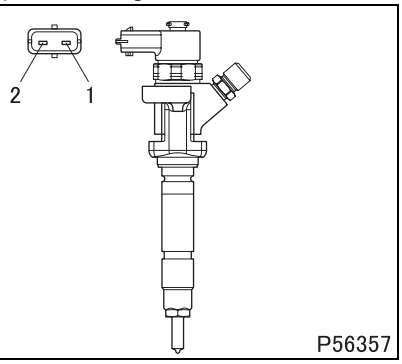

Step 6	Inspection items		Inspection of harness between injector magnetic valve and electronic control unit (power supply)
	Maintenance item		Check circuit between following connector terminals. • Injector magnetic valve (No. 1 cylinder): magnetic valve terminal No. 2 - electronic control unit (GE96A) terminal No. 72 • Injector magnetic valve (No. 3 cylinder): magnetic valve terminal No. 2 - electronic control unit (GE96A) terminal No. 71
	Inspection condition		Disconnect each device from harness and measure from connection side of harness connector.
	Requirements		There is continuity.
	Inspection result (Is the judging standard satisfied?)	YES	Go to step 7.
		NO	Modify harness.

Step 7	Inspection items		Inspection of harness between injector magnetic valve and electronic control unit (ground)
	Maintenance item		Check circuit between following connector terminals. • Injector magnetic valve (No. 1 cylinder): magnetic valve terminal No. 1 - electronic control unit (GE96A) terminal No. 23 • Injector magnetic valve (No. 3 cylinder): magnetic valve terminal No. 1 - electronic control unit (GE96A) terminal No. 46
	Inspection condition		Disconnect each device from harness and measure from connection side of harness connector.
	Requirements		There is continuity.
	Inspection result (Is the judging standard satisfied?)	YES	Go to step 8.
		NO	Modify harness.

Step 8	Inspection items		Inspection by control data
	Maintenance item		Perform following actuator test. • Injector magnetic valve (No. 1 cylinder): Perform item No. BB “Injector Test 1”. • Injector magnetic valve (No. 4 cylinder): Perform item No. BC “Injector Test 2”.
	Inspection condition		• Vehicle: stationary (vehicle speed 0 km/h {0 MPH}) • Engine speed: 1500 rpm or less • Transmission: neutral • The current diagnosis code does not occur.
	Requirements		Injector (No. 1 cylinder) or Injector (No. 3 cylinder) stops injection and engine vibrations become slightly larger.
	Inspection result (Is the judging standard satisfied?)	YES	Go to transient fault (See Gr00.).
		NO	Replacement of electronic control unit

[Fault code]
Diagnosis code: P2150/Flash code: 82
[Monitor]
Injector magnetic valve
[Fault (outline)]
Injector short circuit (No. 2 and 4 cylinders)
[Diagnosis check]
- Injector magnetic valve (No. 2, 4 cylinders) circuit is monitored for fault.

[Code generation condition]
- Injector magnetic valve (No. 2, 4 cylinders) circuit remains shorted to ground as detected for 3 consecutive cycles (Warning lamp is lit and diagnosis code is displayed on first establishment of code generation condition).

[Diagnosis check timing]
- Fault diagnosis is continuously performed during the driving cycle.

[Diagnostic requirement]
–

[Control effected by electronic control unit during fault]
- Injector magnetic valve (No. 2 and No. 3 cylinder) is stopped.
- Exhaust gas recirculation control is stopped.
- Throttle controls disabled
- Misfire detection is stopped.
- Auto cruise control stopped
- Diesel particulate filter regeneration is stopped.
- Injector actuator test is inhibited.
- Turbocharger actuator test is inhibited.
- Related fault check is stopped.

[Probable cause of trouble]
- Open-circuit or short-circuit of harness between electronic control unit and injector magnetic valve
- Malfunction of each connector
- Malfunction of injector magnetic valve
- Malfunction of electronic control unit

[Recoverability]
- Recovered if signal becomes normal with starter switch in ON position.
  (Warning lamp is extinguished and diagnosis code is cleared at fourth display of diagnosis code after recovery.)

[Electronic Control Unit Connection Diagram]

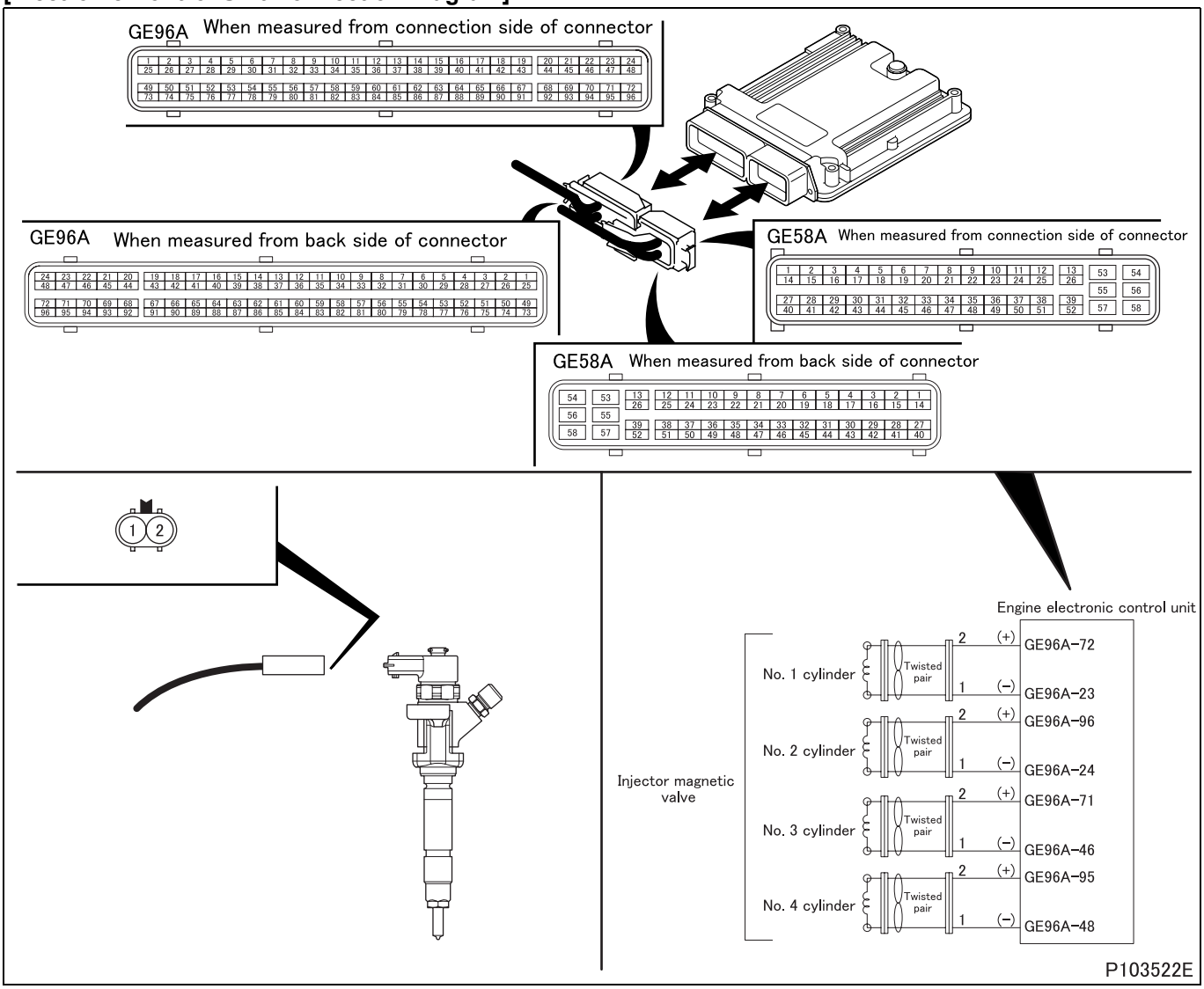

[Parts Identification and Location]

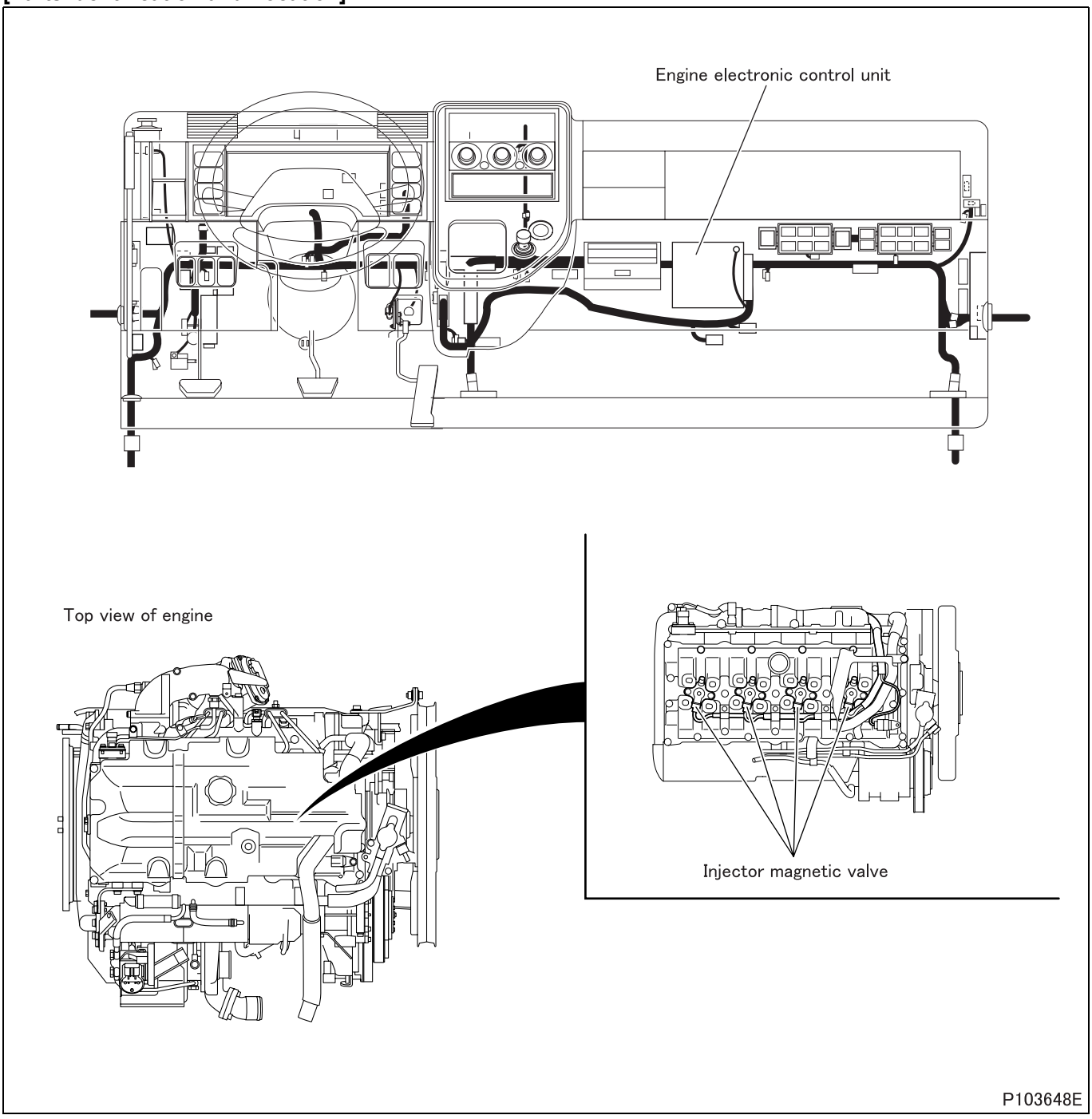

[Fault diagnosis]

- Perform checks in the sequence of the following steps.

Step 1	Inspection items		Inspection by control data
	Maintenance item		Perform following actuator test. • Injector magnetic valve (No. 2 cylinder): Perform item No. BD “Injector Test 3”. • Injector magnetic valve (No. 4 cylinder): Perform item No. BC “Injector Test 2”.
	Inspection condition		• Vehicle: stationary (vehicle speed 0 km/h {0 MPH}) • Engine speed: 1500 rpm or less • Transmission: neutral • The current diagnosis code does not occur.
	Requirements		Injector (No. 2 cylinder) or Injector (No. 4 cylinder) stops injection and engine vibrations become slightly larger.
	Inspection result (Is the judging standard satisfied?)	YES	Go to transient fault (See Gr00.).
		NO	Go to step 2.

Step 2	Inspection items		Inspection by electronic control unit connector
	Maintenance item		Measure values of resistance between following connector (GE96A) terminals • Injector magnetic valve (No. 2 cylinder): 96 (+) - 24 (–) • Injector magnetic valve (No. 4 cylinder): 95 (+) - 48 (–)
	Inspection condition		Disconnect electronic control unit from harness and measure from connection side of harness connector.
	Requirements		0.255 ± 0.04 Ω (20°C {68°F})
	Inspection result (Is the judging standard satisfied?)	YES	Go to step 3.
		NO	Go to step 4.

Step 3	Inspection items		Inspection of electronic control unit connector
	Maintenance item		Inspection of connector
	Inspection condition		–
	Requirements		• Connector is properly connected. • No trace of water entry is found. • No corrosion is found in terminal. • Connection to terminal is appropriate.
	Inspection result (Is the judging standard satisfied?)	YES	Go to step 8.
		NO	Modify connector.

Step 4	Inspection items		Inspection of injector magnetic valve connector
	Maintenance item		Inspection of connector
	Inspection condition		–
	Requirements		• Connector is properly connected. • Connection to terminal is appropriate.
	Inspection result (Is the judging standard satisfied?)	YES	Go to step 5.
		NO	Modify connector.

Step 5	Inspection items		Inspection of injector magnetic valve unit
	Maintenance item		Measure value of resistance between connector terminal No. 1 and 2.
	Inspection condition		–
	Requirements		0.255 ± 0.04 Ω (20°C {68°F})
	Inspection result (Is the judging standard satisfied?)	YES	Go to step 6.
		NO	Replacement of injector

<Step 5 inspection diagram>

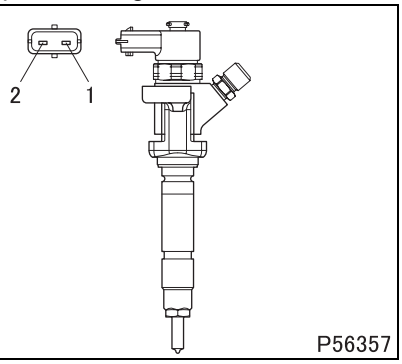

Step 6	Inspection items		Inspection of harness between injector magnetic valve and electronic control unit (power supply)
	Maintenance item		Check circuit between following connector terminals. • Injector magnetic valve (No. 2 cylinder): magnetic valve terminal No. 2 - electronic control unit (GE96A) terminal No. 96 • Injector magnetic valve (No. 4 cylinder): magnetic valve terminal No. 2 - electronic control unit (GE96A) terminal No. 95
	Inspection condition		Disconnect each device from harness and measure from connection side of harness connector.
	Requirements		There is continuity.
	Inspection result (Is the judging standard satisfied?)	YES	Go to step 7.
		NO	Modify harness.

Step 7	Inspection items		Inspection of harness between injector magnetic valve and electronic control unit (ground)
	Maintenance item		Check circuit between following connector terminals. • Injector magnetic valve (No. 2 cylinder): magnetic valve terminal No. 1 - electronic control unit (GE96A) terminal No. 24 • Injector magnetic valve (No. 4 cylinder): magnetic valve terminal No. 1 - electronic control unit (GE96A) terminal No. 48
	Inspection condition		Disconnect each device from harness and measure from connection side of harness connector.
	Requirements		There is continuity.
	Inspection result (Is the judging standard satisfied?)	YES	Go to step 8.
		NO	Modify harness.

Step 8	Inspection items		Inspection by control data
	Maintenance item		Perform following actuator test. • Injector magnetic valve (No. 2 cylinder): Perform item No. BD “Injector Test 3”. • Injector magnetic valve (No. 4 cylinder): Perform item No. BC “Injector Test 2”.
	Inspection condition		• Vehicle: stationary (vehicle speed 0 km/h {0 MPH}) • Engine speed: 1500 rpm or less • Transmission: neutral • The current diagnosis code does not occur.
	Requirements		Injector (No. 2 cylinder) or Injector (No. 4 cylinder) stops injection and engine vibrations become slightly larger.
	Inspection result (Is the judging standard satisfied?)	YES	Go to transient fault (See Gr00.).
		NO	Replacement of electronic control unit

[Fault code]
Diagnosis code: P2151/Flash code: 82
[Monitor]
Injector magnetic valve
[Fault (outline)]
Injector short circuit (No. 2 and 4 cylinders)
[Diagnosis check]
- Injector magnetic valve (No. 2, 4 cylinders) circuit is monitored for fault.

[Code generation condition]
- Injector magnetic valve (No. 2, 4 cylinders) circuit remains shorted to power supply as detected for 3 consecutive cycles (Warning lamp is lit and diagnosis code is displayed on first establishment of code generation condition).

[Diagnosis check timing]
- Fault diagnosis is continuously performed during the driving cycle.

[Diagnostic requirement]
–

[Control effected by electronic control unit during fault]
- Injector magnetic valve (No. 2 and No. 3 cylinder) is stopped.
- Exhaust gas recirculation control is stopped.
- Throttle controls disabled
- Misfire detection is stopped.
- Auto cruise control stopped
- Diesel particulate filter regeneration is stopped.
- Injector actuator test is inhibited.
- Turbocharger actuator test is inhibited.
- Related fault check is stopped.

[Probable cause of trouble]
- Open-circuit or short-circuit of harness between electronic control unit and injector magnetic valve
- Malfunction of each connector
- Malfunction of injector magnetic valve
- Malfunction of electronic control unit

[Recoverability]
- Recovered if signal becomes normal with starter switch in ON position.
  (Warning lamp is extinguished and diagnosis code is cleared at fourth display of diagnosis code after recovery.)

[Electronic Control Unit Connection Diagram]

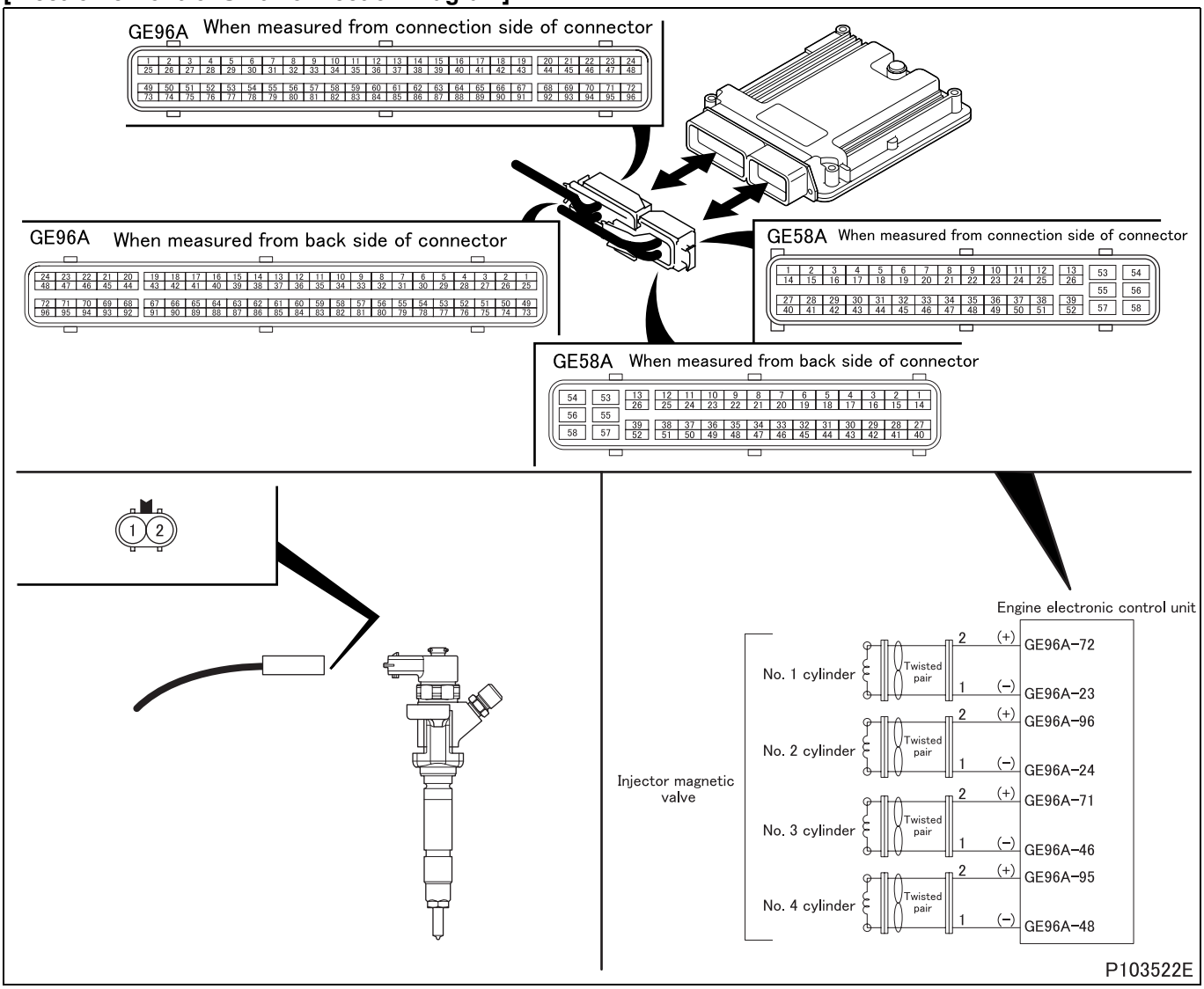

[Parts Identification and Location]

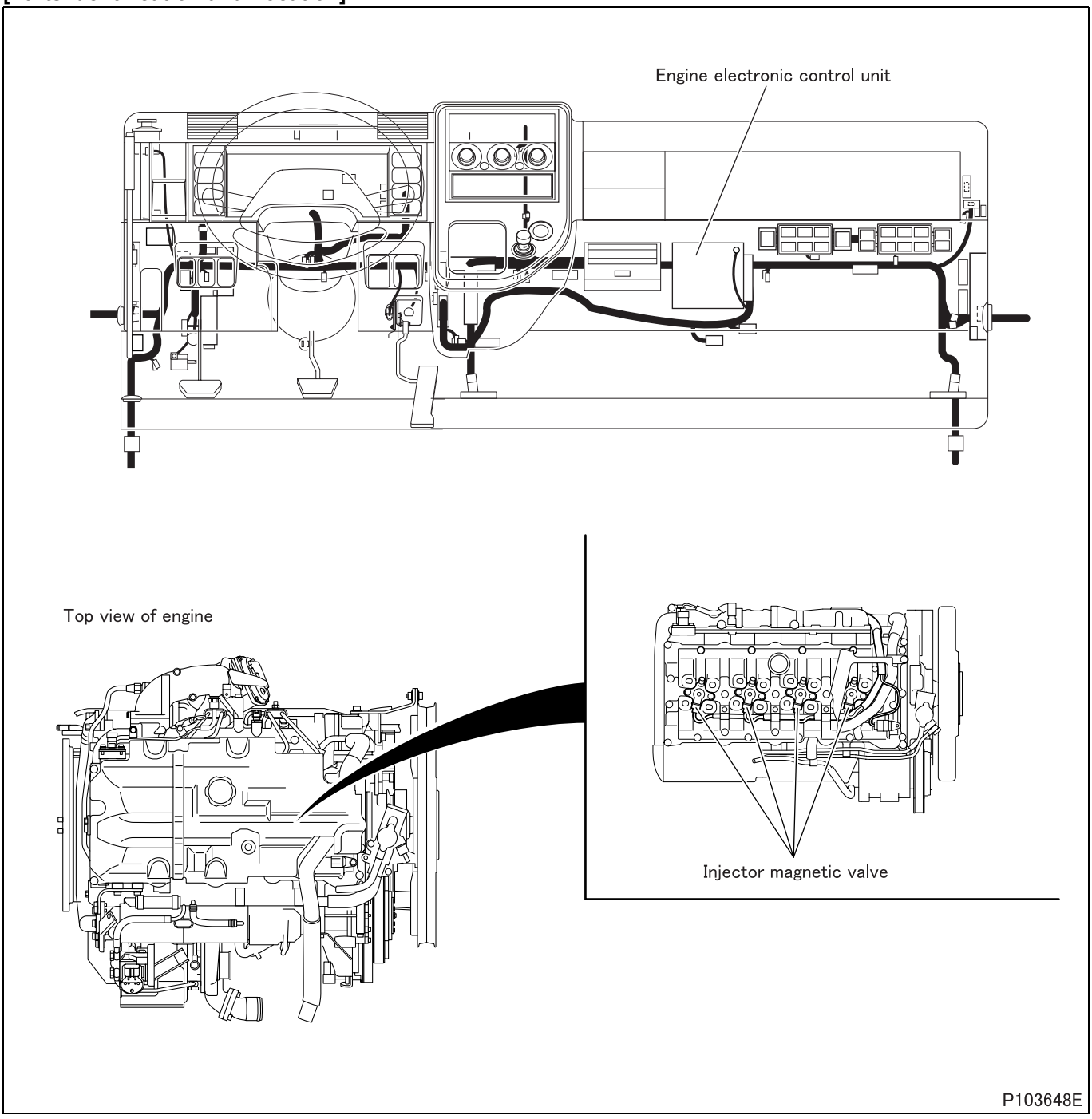

[Fault diagnosis]

- Perform checks in the sequence of the following steps.

Step 1	Inspection items		Inspection by control data
	Maintenance item		Perform following actuator test. • Injector magnetic valve (No. 2 cylinder): Perform item No. BD “Injector Test 3”. • Injector magnetic valve (No. 4 cylinder): Perform item No. BC “Injector Test 2”.
	Inspection condition		• Vehicle: stationary (vehicle speed 0 km/h {0 MPH}) • Engine speed: 1500 rpm or less • Transmission: neutral • The current diagnosis code does not occur.
	Requirements		Injector (No. 2 cylinder) or Injector (No. 4 cylinder) stops injection and engine vibrations become slightly larger.
	Inspection result (Is the judging standard satisfied?)	YES	Go to transient fault (See Gr00.).
		NO	Go to step 2.

Step 2	Inspection items		Inspection by electronic control unit connector
	Maintenance item		Measure values of resistance between following connector (GE96A) terminals • Injector magnetic valve (No. 2 cylinder): 96 (+) - 24 (–) • Injector magnetic valve (No. 4 cylinder): 95 (+) - 48 (–)
	Inspection condition		Disconnect electronic control unit from harness and measure from connection side of harness connector.
	Requirements		0.255 ± 0.04 Ω (20°C {68°F})
	Inspection result (Is the judging standard satisfied?)	YES	Go to step 3.
		NO	Go to step 4.

Step 3	Inspection items		Inspection of electronic control unit connector
	Maintenance item		Inspection of connector
	Inspection condition		–
	Requirements		• Connector is properly connected. • No trace of water entry is found. • No corrosion is found in terminal. • Connection to terminal is appropriate.
	Inspection result (Is the judging standard satisfied?)	YES	Go to step 8.
		NO	Modify connector.

Step 4	Inspection items		Inspection of injector magnetic valve connector
	Maintenance item		Inspection of connector
	Inspection condition		–
	Requirements		• Connector is properly connected. • Connection to terminal is appropriate.
	Inspection result (Is the judging standard satisfied?)	YES	Go to step 5.
		NO	Modify connector.

Step 5	Inspection items		Inspection of injector magnetic valve unit
	Maintenance item		Measure value of resistance between connector terminal No. 1 and 2.
	Inspection condition		–
	Requirements		0.255 ± 0.04 Ω (20°C {68°F})
	Inspection result (Is the judging standard satisfied?)	YES	Go to step 6.
		NO	Replacement of injector

<Step 5 inspection diagram>

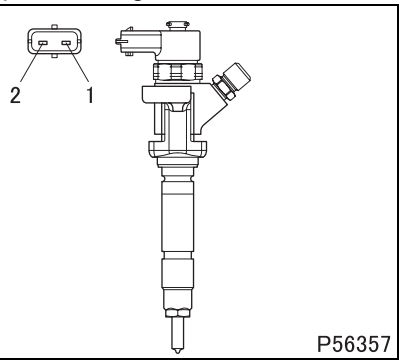

Step 6	Inspection items		Inspection of harness between injector magnetic valve and electronic control unit (power supply)
	Maintenance item		Check circuit between following connector terminals. • Injector magnetic valve (No. 2 cylinder): magnetic valve terminal No. 2 - electronic control unit (GE96A) terminal No. 96 • Injector magnetic valve (No. 4 cylinder): magnetic valve terminal No. 2 - electronic control unit (GE96A) terminal No. 95
	Inspection condition		Disconnect each device from harness and measure from connection side of harness connector.
	Requirements		There is continuity.
	Inspection result (Is the judging standard satisfied?)	YES	Go to step 7.
		NO	Modify harness.

Step 7	Inspection items		Inspection of harness between injector magnetic valve and electronic control unit (ground)
	Maintenance item		Check circuit between following connector terminals. • Injector magnetic valve (No. 2 cylinder): magnetic valve terminal No. 1 - electronic control unit (GE96A) terminal No. 24 • Injector magnetic valve (No. 4 cylinder): magnetic valve terminal No. 1 - electronic control unit (GE96A) terminal No. 48
	Inspection condition		Disconnect each device from harness and measure from connection side of harness connector.
	Requirements		There is continuity.
	Inspection result (Is the judging standard satisfied?)	YES	Go to step 8.
		NO	Modify harness.

Step 8	Inspection items		Inspection by control data
	Maintenance item		Perform following actuator test. • Injector magnetic valve (No. 2 cylinder): Perform item No. BD “Injector Test 3”. • Injector magnetic valve (No. 4 cylinder): Perform item No. BC “Injector Test 2”.
	Inspection condition		• Vehicle: stationary (vehicle speed 0 km/h {0 MPH}) • Engine speed: 1500 rpm or less • Transmission: neutral • The current diagnosis code does not occur.
	Requirements		Injector (No. 2 cylinder) or Injector (No. 4 cylinder) stops injection and engine vibrations become slightly larger.
	Inspection result (Is the judging standard satisfied?)	YES	Go to transient fault (See Gr00.).
		NO	Replacement of electronic control unit

[Fault code]
Diagnosis code: P2169/Flash code: 93
[Monitor]
Failure of exhaust shutter 2-way magnetic valve
[Fault (outline)]
Open circuit
[Diagnosis check]
- Exhaust shutter 2-way magnetic valve circuit is monitored for fault.

[Code generation condition]
- Exhaust shutter 2-way magnetic valve circuit remains open or overloaded as detected for 1 second.
  (Warning lamp is lit and diagnosis code is displayed on third establishment of code generation condition.)

[Diagnosis check timing]
- Fault diagnosis is performed each time when the control is initiated.
- Fault diagnosis is performed each time when the control is halted.

[Diagnostic requirement]
–

[Control effected by electronic control unit during fault]
- Auxiliary brake control is stopped.
- Diesel particulate filter regeneration is stopped.
- Related fault check is stopped.

[Probable cause of trouble]
- Open-circuit of harness between electronic control unit and exhaust shutter 2-way magnetic valve
- Malfunction of each connector
- Malfunction of exhaust shutter 2-way magnetic valve
- Malfunction of electronic control unit

[Recoverability]
- Recovered if signal becomes normal when starter switch is turned OFF to ON (power supply resumed to electronic control unit).
  (Warning lamp is extinguished and diagnosis code is cleared at fourth display of diagnosis code after recovery.)

[Electronic Control Unit Connection Diagram]

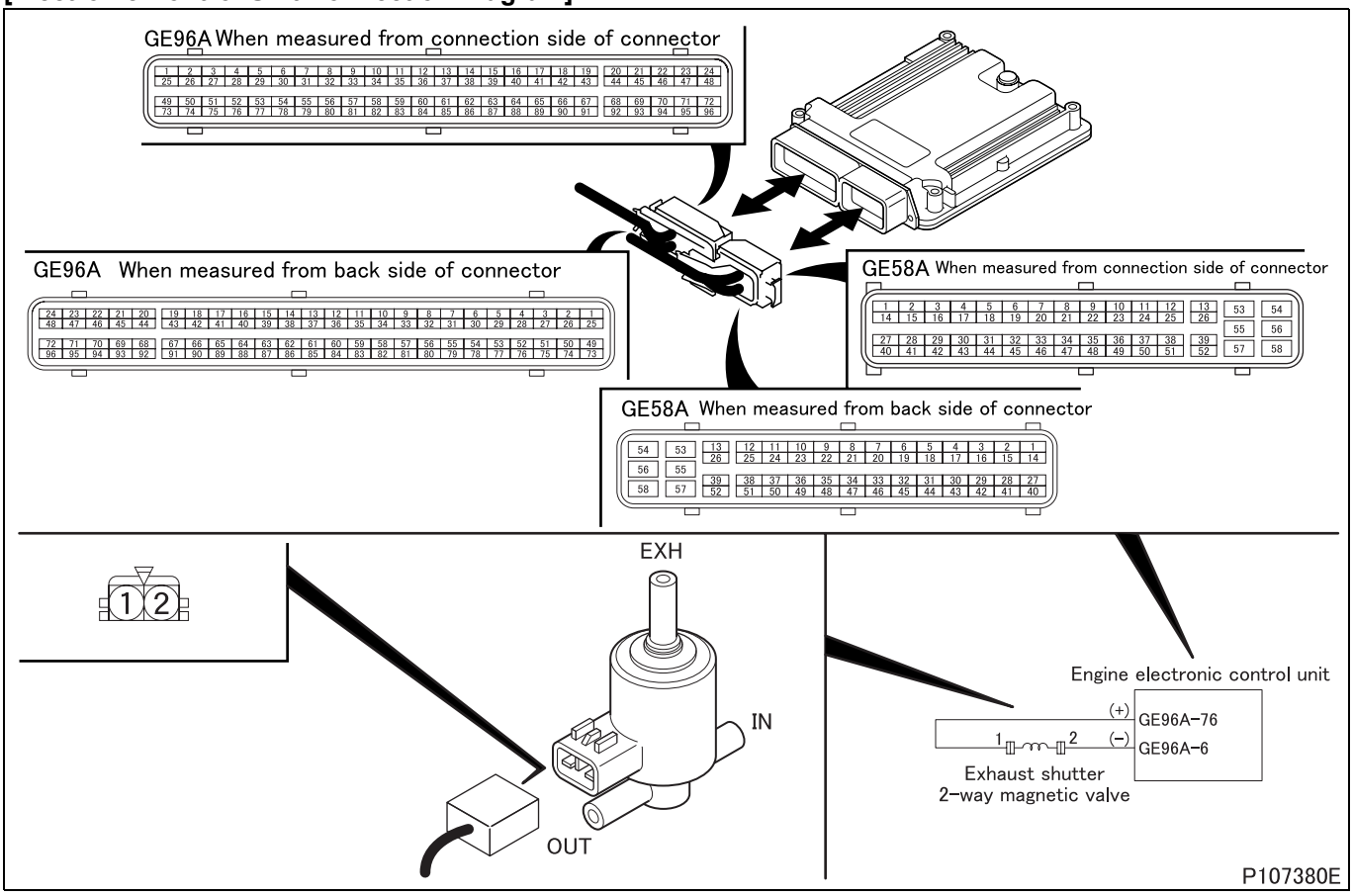

[Parts Identification and Location]

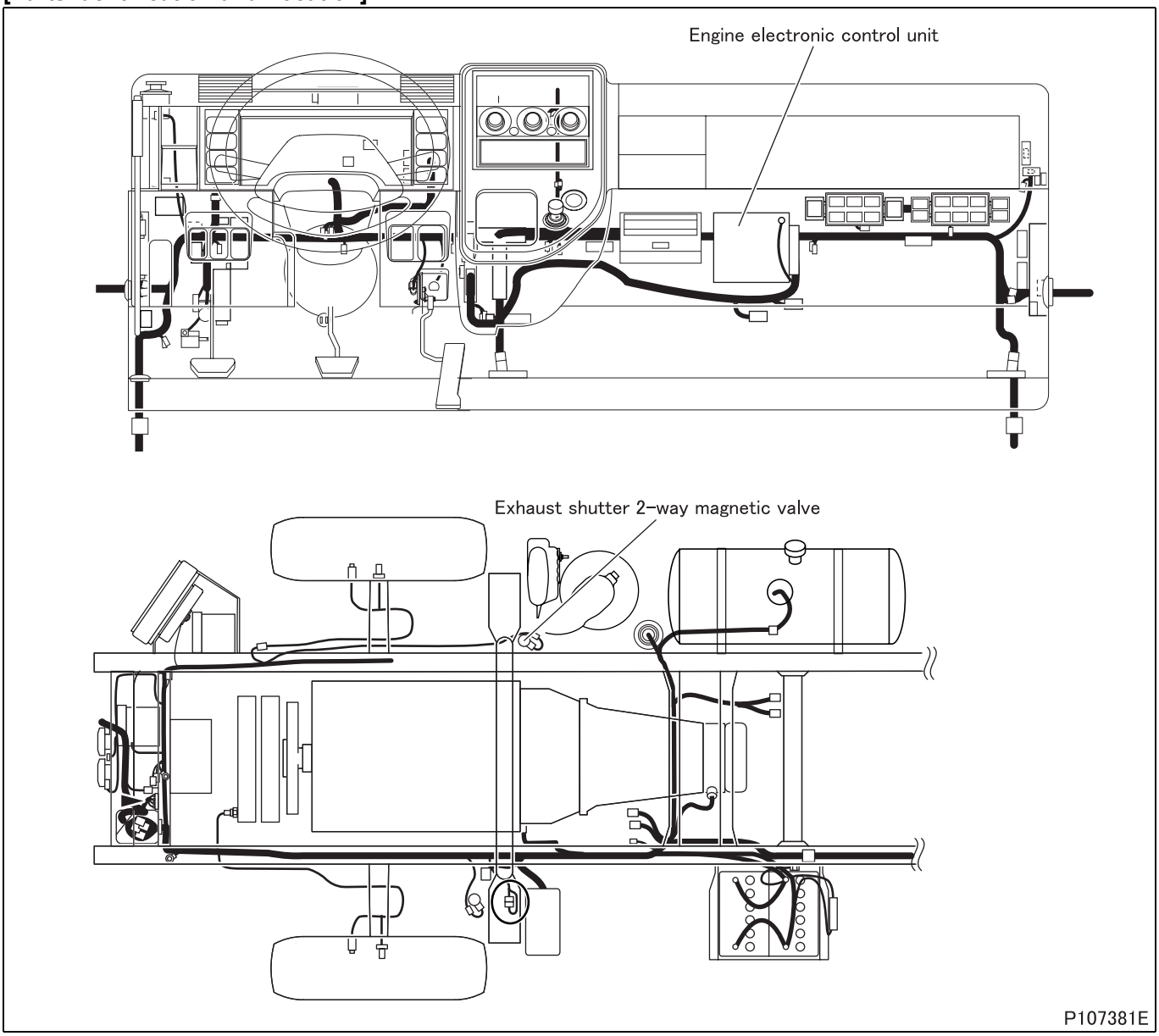

[Fault diagnosis]

- Perform checks in the sequence of the following steps.

Step 1	Inspection items		Inspection by electronic control unit connector
	Maintenance item		Measure value of resistance between connector (GE96A) terminal No. 6 and 76.
	Inspection condition		Disconnect electronic control unit from harness and measure from connection side of harness connector.
	Requirements		48 Ω or more
	Inspection result (Is the judging standard satisfied?)	YES	Go to step 8.
		NO	Go to step 2.

Step 2	Inspection items		Inspection of electronic control unit connector
	Maintenance item		Inspection of connector
	Inspection condition		–
	Requirements		• Connector is properly connected. • No trace of water entry is found. • No corrosion is found in terminal. • Connection to terminal is appropriate.
	Inspection result (Is the judging standard satisfied?)	YES	Go to step 3.
		NO	Modify connector.

Step 3	Inspection items		Inspection of 2-way magnetic valve connector
	Maintenance item		Inspection of connector
	Inspection condition		–
	Requirements		• Connector is properly connected. • No trace of water entry is found. • No corrosion is found in terminal. • Connection to terminal is appropriate.
	Inspection result (Is the judging standard satisfied?)	YES	Go to step 4.
		NO	Modify connector.

Step 4	Inspection items		Inspection of 2-way magnetic valve unit
	Maintenance item		Measure minimum operating voltage when 2-way magnetic valve operates (judge by operation sound).
	Inspection condition		Gradually increase from zero the voltage applied to terminals No. 1 (+) and 2 (–).
	Requirements		11 V or less
	Inspection result (Is the judging standard satisfied?)	YES	Go to step 5.
		NO	Replacement of 2-way magnetic valve

<Step 4 inspection diagram>

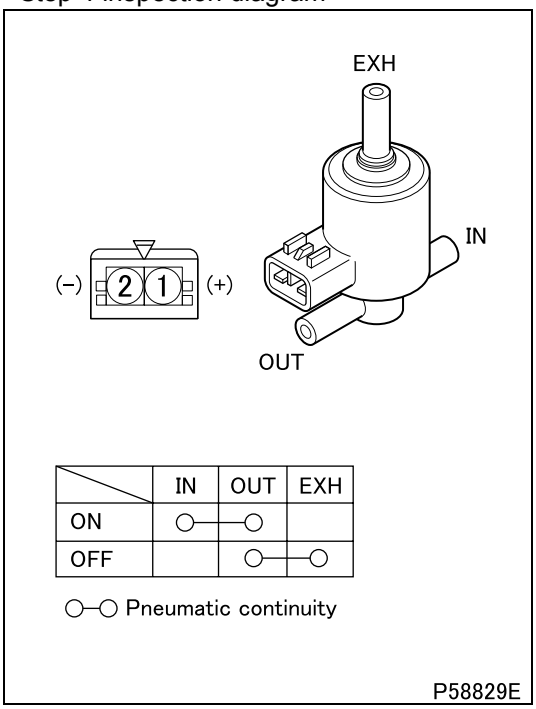

Step 5	Inspection items		Inspection of harness between exhaust shutter 2-way magnetic valve and electronic control unit (power supply)
	Maintenance item		Check circuit between exhaust shutter 2-way magnetic valve connector terminal No. 1 and electronic control unit connector (GE96A) terminal No. 76.
	Inspection condition		Disconnect each device from harness and measure from connection side of harness connector.
	Requirements		There is continuity.
	Inspection result (Is the judging standard satisfied?)	YES	Go to step 6.
		NO	Modify harness.

Step 6	Inspection items		Inspection of harness between exhaust shutter 2-way magnetic valve and electronic control unit (power supply)
	Maintenance item		Check circuit between exhaust shutter 2-way magnetic valve connector terminal No. 1 and chassis ground.
	Inspection condition		Disconnect each device from harness and measure from connection side of harness connector.
	Requirements		There is no continuity.
	Inspection result (Is the judging standard satisfied?)	YES	Go to step 7.
		NO	Modify harness.

Step 7	Inspection items		Inspection of harness between exhaust shutter 2-way magnetic valve and electronic control unit (ground)
	Maintenance item		Check circuit between exhaust shutter 2-way magnetic valve connector terminal No. 2 and electronic control unit connector (GE96A) terminal No. 6.
	Inspection condition		Disconnect each device from harness and measure from connection side of harness connector.
	Requirements		There is continuity.
	Inspection result (Is the judging standard satisfied?)	YES	Go to step 8.
		NO	Modify harness.

Step 8	Inspection items		Inspection by control data
	Maintenance item		Perform actuator test item No. AA “Auxiliary Brake M/V 1”.
	Inspection condition		Starter switch: ON
	Requirements		2-way magnetic valve operation sound is noted
	Inspection result (Is the judging standard satisfied?)	YES	Go to transient fault (See Gr00.).
		NO	Replacement of electronic control unit

[Fault code]
Diagnosis code: P2170/Flash code: 93
[Monitor]
Failure of exhaust shutter 2-way magnetic valve
[Fault (outline)]
Short circuit ground
[Diagnosis check]
- Exhaust shutter 2-way magnetic valve circuit is monitored for fault.

[Code generation condition]
- Exhaust shutter 2-way magnetic valve circuit remains shorted to ground as detected for 1 second. (Warning lamp is lit and diagnosis code is displayed on third establishment of code generation condition.)

[Diagnosis check timing]
- Fault diagnosis is performed each time when the control is halted.

[Diagnostic requirement]
–

[Control effected by electronic control unit during fault]
- Auxiliary brake control is stopped.
- Diesel particulate filter regeneration is stopped.
- Related fault check is stopped.

[Probable cause of trouble]
- Short-circuit of harness between electronic control unit and exhaust shutter 2-way magnetic valve
- Malfunction of each connector
- Malfunction of exhaust shutter 2-way magnetic valve
- Malfunction of electronic control unit

[Recoverability]
- Recovered if signal becomes normal when starter switch is turned OFF to ON (power supply resumed to electronic control unit).
  (Warning lamp is extinguished and diagnosis code is cleared at fourth display of diagnosis code after recovery.)

[Electronic Control Unit Connection Diagram]

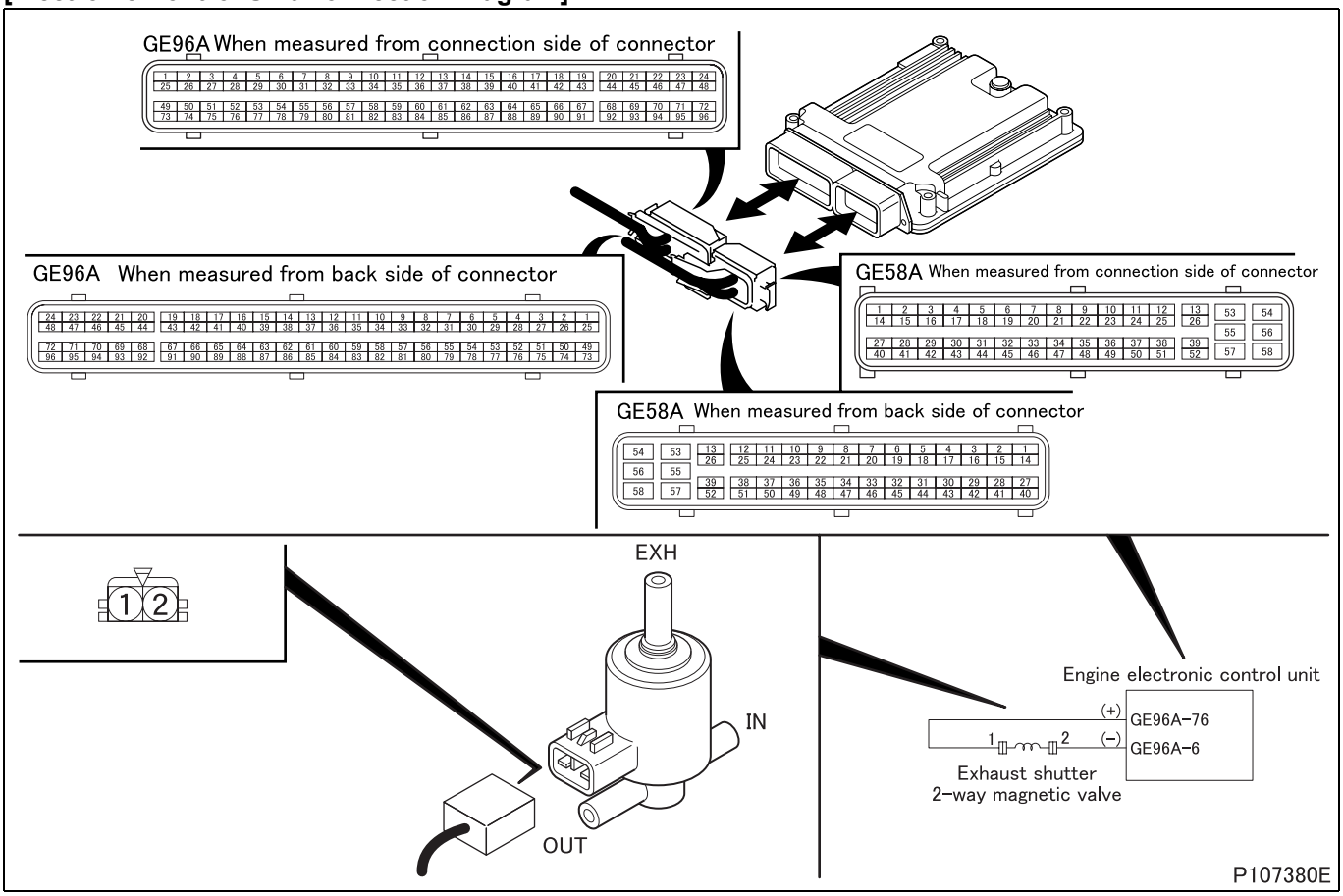

[Parts Identification and Location]

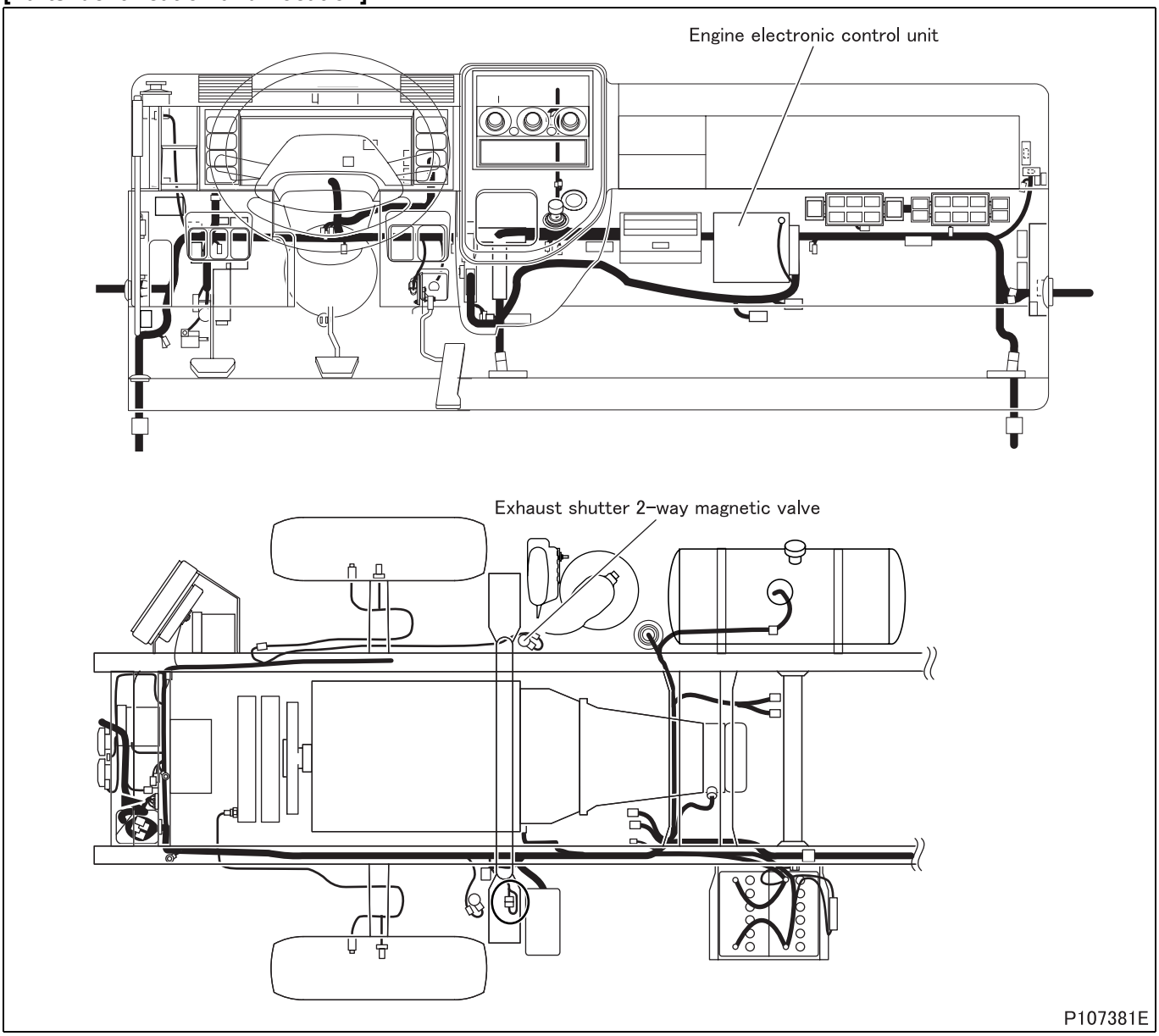

[Fault diagnosis]

- Perform checks in the sequence of the following steps.

Step 1	Inspection items		Inspection by electronic control unit connector
	Maintenance item		Measure value of resistance between connector (GE96A) terminal No. 6 and 76.
	Inspection condition		Disconnect electronic control unit from harness and measure from connection side of harness connector.
	Requirements		48 Ω or more
	Inspection result (Is the judging standard satisfied?)	YES	Go to step 8.
		NO	Go to step 2.

Step 2	Inspection items		Inspection of electronic control unit connector
	Maintenance item		Inspection of connector
	Inspection condition		–
	Requirements		• Connector is properly connected. • No trace of water entry is found. • No corrosion is found in terminal. • Connection to terminal is appropriate.
	Inspection result (Is the judging standard satisfied?)	YES	Go to step 3.
		NO	Modify connector.

Step 3	Inspection items		Inspection of 2-way magnetic valve connector
	Maintenance item		Inspection of connector
	Inspection condition		–
	Requirements		• Connector is properly connected. • No trace of water entry is found. • No corrosion is found in terminal. • Connection to terminal is appropriate.
	Inspection result (Is the judging standard satisfied?)	YES	Go to step 4.
		NO	Modify connector.

Step 4	Inspection items		Inspection of 2-way magnetic valve unit
	Maintenance item		Measure minimum operating voltage when 2-way magnetic valve operates (judge by operation sound).
	Inspection condition		Gradually increase from zero the voltage applied to terminals No. 1 (+) and 2 (–).
	Requirements		11 V or less
	Inspection result (Is the judging standard satisfied?)	YES	Go to step 5.
		NO	Replacement of 2-way magnetic valve

<Step 4 inspection diagram>

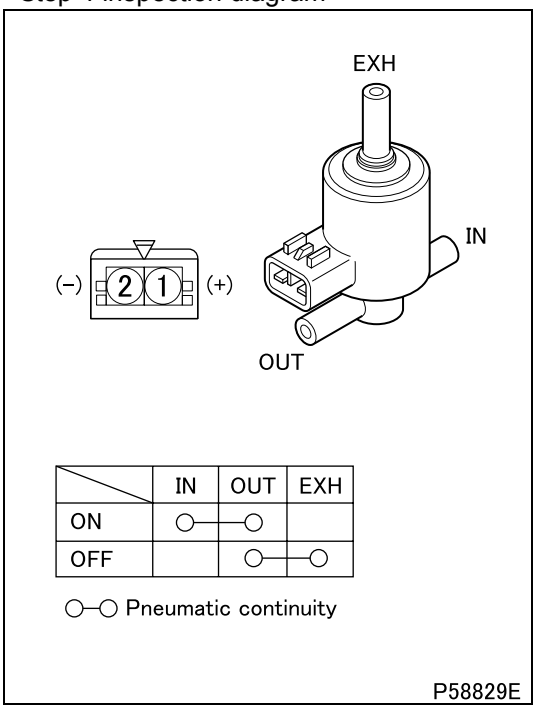

Step 5	Inspection items		Inspection of harness between exhaust shutter 2-way magnetic valve and electronic control unit (power supply)
	Maintenance item		Check circuit between exhaust shutter 2-way magnetic valve connector terminal No. 1 and electronic control unit connector (GE96A) terminal No. 76.
	Inspection condition		Disconnect each device from harness and measure from connection side of harness connector.
	Requirements		There is continuity.
	Inspection result (Is the judging standard satisfied?)	YES	Go to step 6.
		NO	Modify harness.

Step 6	Inspection items		Inspection of harness between exhaust shutter 2-way magnetic valve and electronic control unit (power supply)
	Maintenance item		Check circuit between exhaust shutter 2-way magnetic valve connector terminal No. 1 and chassis ground.
	Inspection condition		Disconnect each device from harness and measure from connection side of harness connector.
	Requirements		There is no continuity.
	Inspection result (Is the judging standard satisfied?)	YES	Go to step 7.
		NO	Modify harness.

Step 7	Inspection items		Inspection of harness between exhaust shutter 2-way magnetic valve and electronic control unit (ground)
	Maintenance item		Check circuit between exhaust shutter 2-way magnetic valve connector terminal No. 2 and electronic control unit connector (GE96A) terminal No. 6.
	Inspection condition		Disconnect each device from harness and measure from connection side of harness connector.
	Requirements		There is continuity.
	Inspection result (Is the judging standard satisfied?)	YES	Go to step 8.
		NO	Modify harness.

Step 8	Inspection items		Inspection by control data
	Maintenance item		Perform actuator test item No. AA “Auxiliary Brake M/V 1”.
	Inspection condition		Starter switch: ON
	Requirements		2-way magnetic valve operation sound is noted
	Inspection result (Is the judging standard satisfied?)	YES	Go to transient fault (See Gr00.).
		NO	Replacement of electronic control unit

[Fault code]
Diagnosis code: P2171/Flash code: 93
[Monitor]
Failure of exhaust shutter 2-way magnetic valve
[Fault (outline)]
Short circuit battery
[Diagnosis check]
- Exhaust shutter 2-way magnetic valve circuit is monitored for fault.

[Code generation condition]
- Exhaust shutter 2-way magnetic valve circuit remains shorted to power supply as detected for 1 second. (Warning lamp is lit and diagnosis code is displayed on third establishment of code generation condition.)

[Diagnosis check timing]
- Fault diagnosis is performed each time when the control is initiated.

[Diagnostic requirement]
–

[Control effected by electronic control unit during fault]
- Auxiliary brake control is stopped.
- Diesel particulate filter regeneration is stopped.
- Related fault check is stopped.

[Probable cause of trouble]
- Short-circuit of harness between electronic control unit and exhaust shutter 2-way magnetic valve
- Malfunction of each connector
- Malfunction of exhaust shutter 2-way magnetic valve
- Malfunction of electronic control unit

[Recoverability]
- Recovered if signal becomes normal when starter switch is turned OFF to ON (power supply resumed to electronic control unit).
  (Warning lamp is extinguished and diagnosis code is cleared at fourth display of diagnosis code after recovery.)

[Electronic Control Unit Connection Diagram]

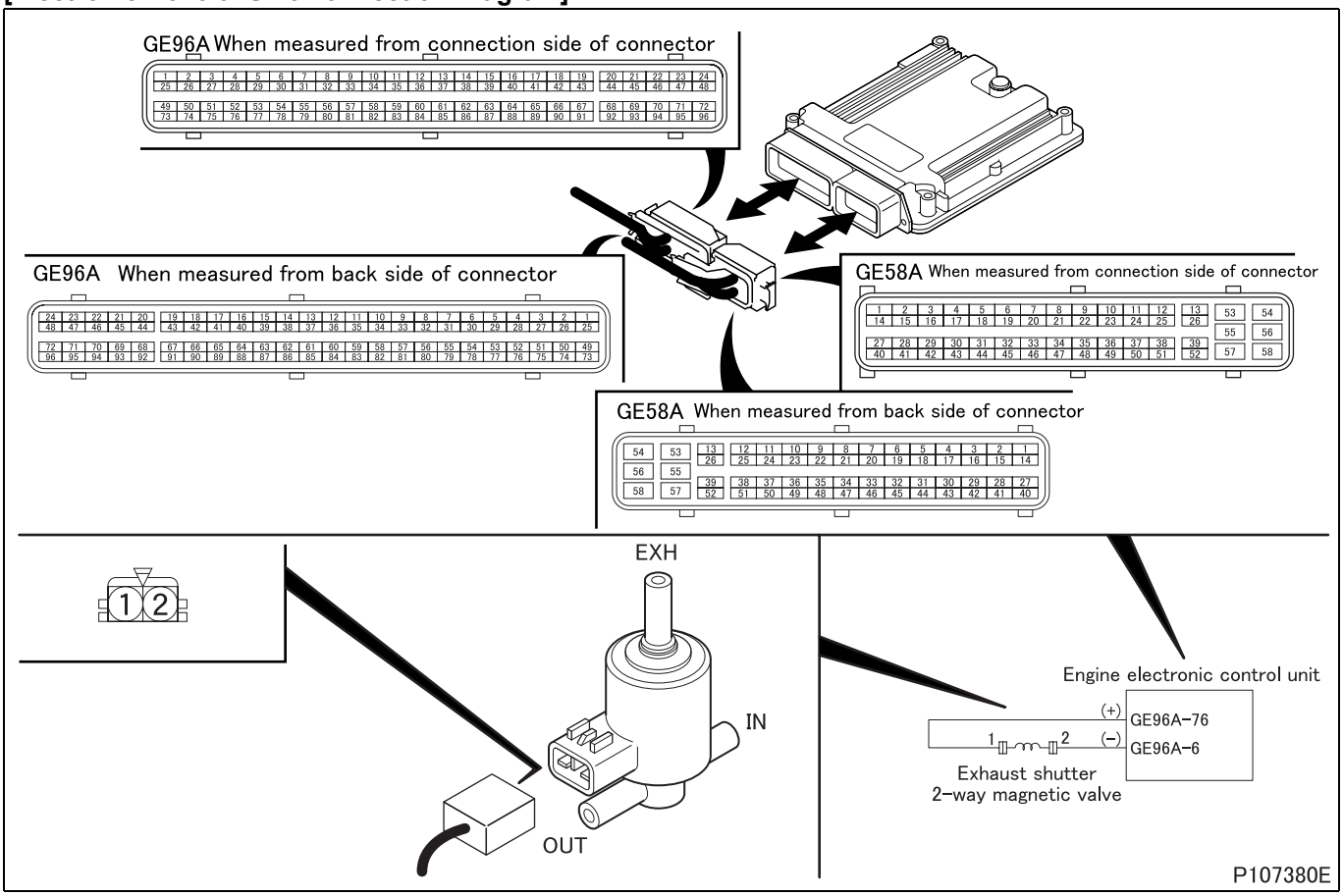

[Parts Identification and Location]

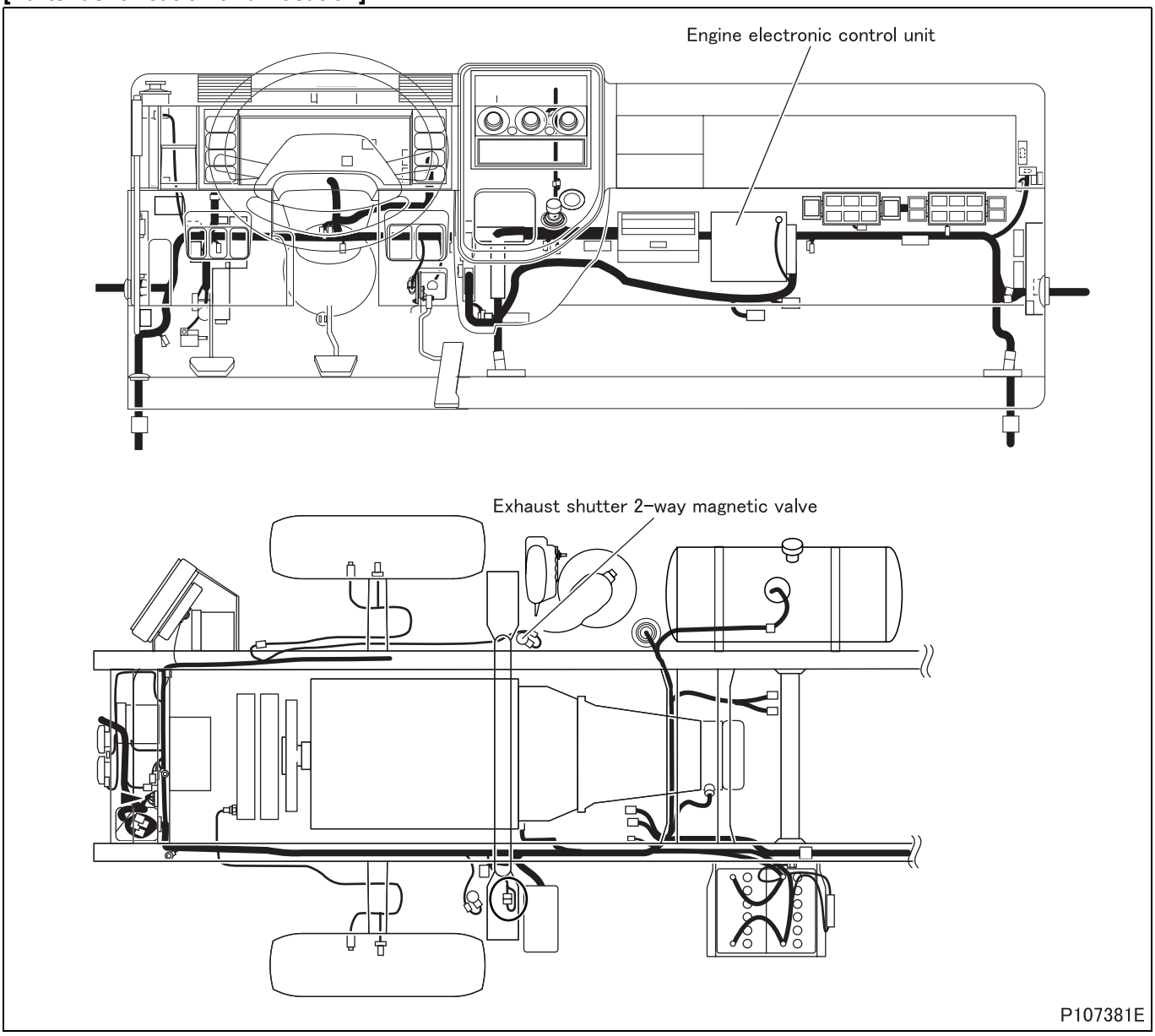

[Fault diagnosis]

- Perform checks in the sequence of the following steps.

Step 1	Inspection items		Inspection by electronic control unit connector
	Maintenance item		Measure value of resistance between connector (GE96A) terminal No. 6 and 76.
	Inspection condition		Disconnect electronic control unit from harness and measure from connection side of harness connector.
	Requirements		48 Ω or more
	Inspection result (Is the judging standard satisfied?)	YES	Go to step 8.
		NO	Go to step 2.

Step 2	Inspection items		Inspection of electronic control unit connector
	Maintenance item		Inspection of connector
	Inspection condition		–
	Requirements		• Connector is properly connected. • No trace of water entry is found. • No corrosion is found in terminal. • Connection to terminal is appropriate.
	Inspection result (Is the judging standard satisfied?)	YES	Go to step 3.
		NO	Modify connector.

Step 3	Inspection items		Inspection of 2-way magnetic valve connector
	Maintenance item		Inspection of connector
	Inspection condition		–
	Requirements		• Connector is properly connected. • No trace of water entry is found. • No corrosion is found in terminal. • Connection to terminal is appropriate.
	Inspection result (Is the judging standard satisfied?)	YES	Go to step 4.
		NO	Modify connector.

Step 4	Inspection items		Inspection of 2-way magnetic valve unit
	Maintenance item		Measure minimum operating voltage when 2-way magnetic valve operates (judge by operation sound).
	Inspection condition		Gradually increase from zero the voltage applied to terminals No. 1 (+) and 2 (–).
	Requirements		11 V or less
	Inspection result (Is the judging standard satisfied?)	YES	Go to step 5.
		NO	Replacement of 2-way magnetic valve

<Step 4 inspection diagram>

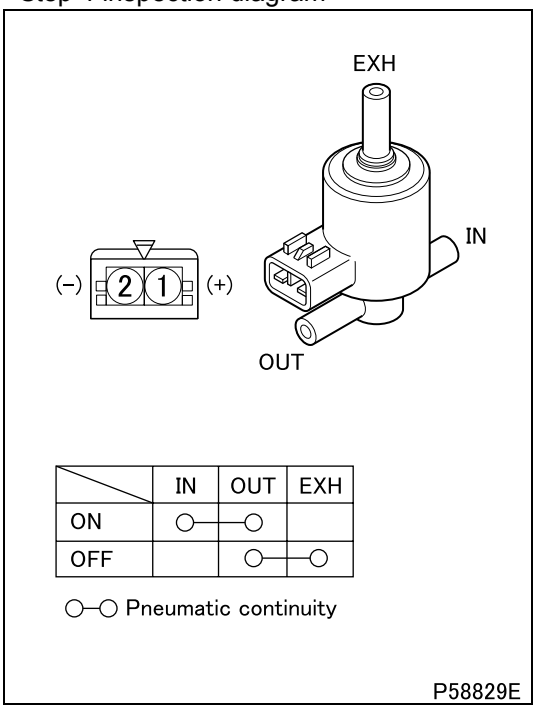

Step 5	Inspection items		Inspection of harness between exhaust shutter 2-way magnetic valve and electronic control unit (power supply)
	Maintenance item		Check circuit between exhaust shutter 2-way magnetic valve connector terminal No. 1 and electronic control unit connector (GE96A) terminal No. 76.
	Inspection condition		Disconnect each device from harness and measure from connection side of harness connector.
	Requirements		There is continuity.
	Inspection result (Is the judging standard satisfied?)	YES	Go to step 6.
		NO	Modify harness.

Step 6	Inspection items		Inspection of harness between exhaust shutter 2-way magnetic valve and electronic control unit (power supply)
	Maintenance item		Check circuit between exhaust shutter 2-way magnetic valve connector terminal No. 1 and chassis ground.
	Inspection condition		Disconnect each device from harness and measure from connection side of harness connector.
	Requirements		There is no continuity.
	Inspection result (Is the judging standard satisfied?)	YES	Go to step 7.
		NO	Modify harness.

Step 7	Inspection items		Inspection of harness between exhaust shutter 2-way magnetic valve and electronic control unit (ground)
	Maintenance item		Check circuit between exhaust shutter 2-way magnetic valve connector terminal No. 2 and electronic control unit connector (GE96A) terminal No. 6.
	Inspection condition		Disconnect each device from harness and measure from connection side of harness connector.
	Requirements		There is continuity.
	Inspection result (Is the judging standard satisfied?)	YES	Go to step 8.
		NO	Modify harness.

Step 8	Inspection items		Inspection by control data
	Maintenance item		Perform actuator test item No. AA “Auxiliary Brake M/V 1”.
	Inspection condition		Starter switch: ON
	Requirements		2-way magnetic valve operation sound is noted
	Inspection result (Is the judging standard satisfied?)	YES	Go to transient fault (See Gr00.).
		NO	Replacement of electronic control unit

[Fault code]
Diagnosis code: P2184/Flash code: 21
[Monitor]
Failure of water temperature sensor 2
[Fault (outline)]
Low signal range check
[Diagnosis check]
- Output voltage of water temperature sensor 2 is monitored.

[Code generation condition]
- Voltage of water temperature sensor 2 remains below 0.1 V for 1 second. (sensor temperature: 150°C {302°F} or more) (Warning lamp is lit and diagnosis code is displayed on third establishment of code generation condition.)

[Diagnosis check timing]
- Fault diagnosis is continuously performed during the driving cycle.

[Diagnostic requirement]
–

[Control effected by electronic control unit during fault]
- Related fault check is stopped.

[Probable cause of trouble]
- Open-circuit or short-circuit of harness between electronic control unit and water temperature sensor 2
- Malfunction of each connector
- Malfunction of sensor
- Malfunction of electronic control unit

[Recoverability]
- Recovered if signal becomes normal with starter switch in ON position.
  (Warning lamp is extinguished and diagnosis code is cleared at fourth display of diagnosis code after recovery.)

[Electronic Control Unit Connection Diagram]

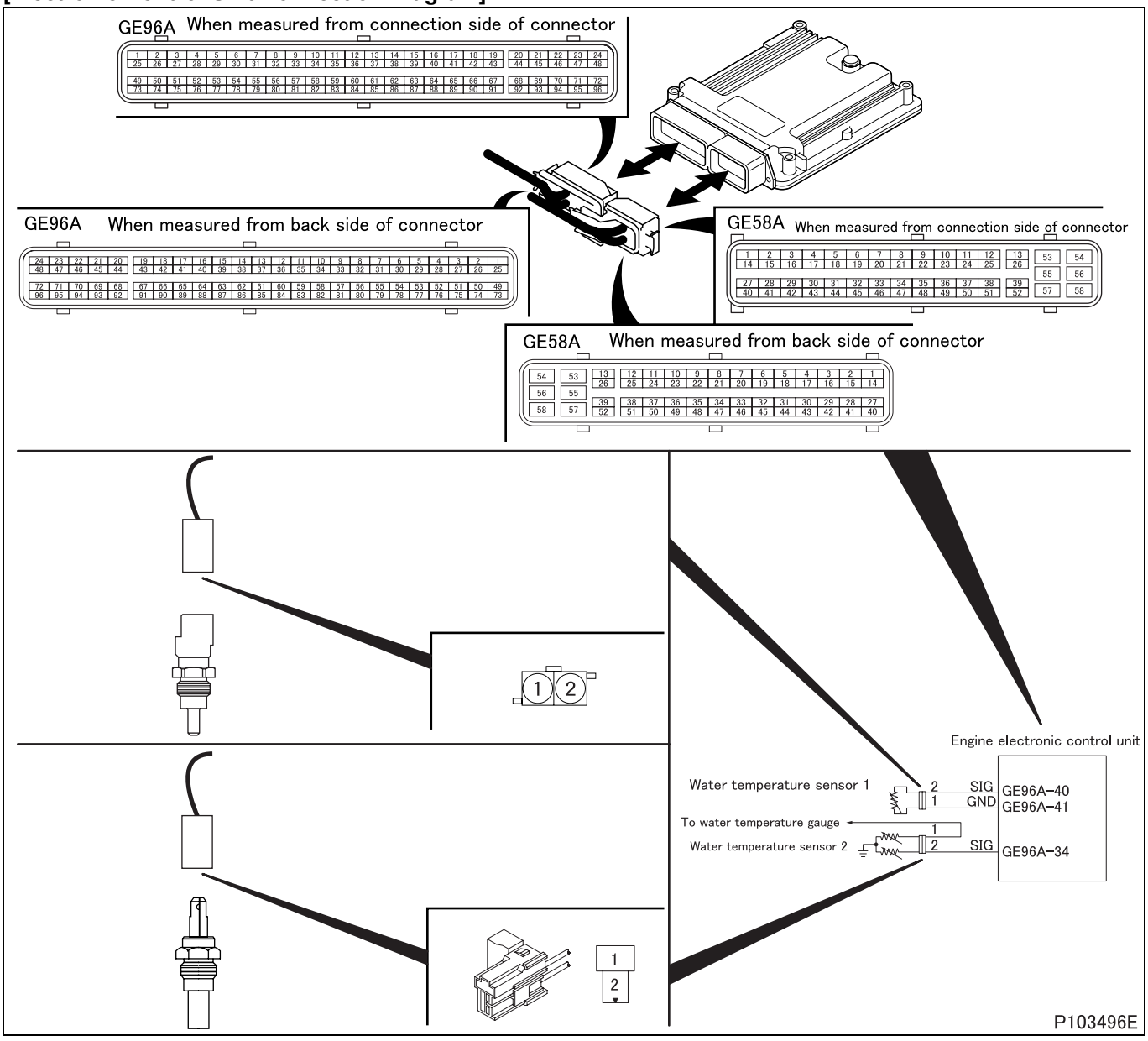

[Parts Identification and Location]

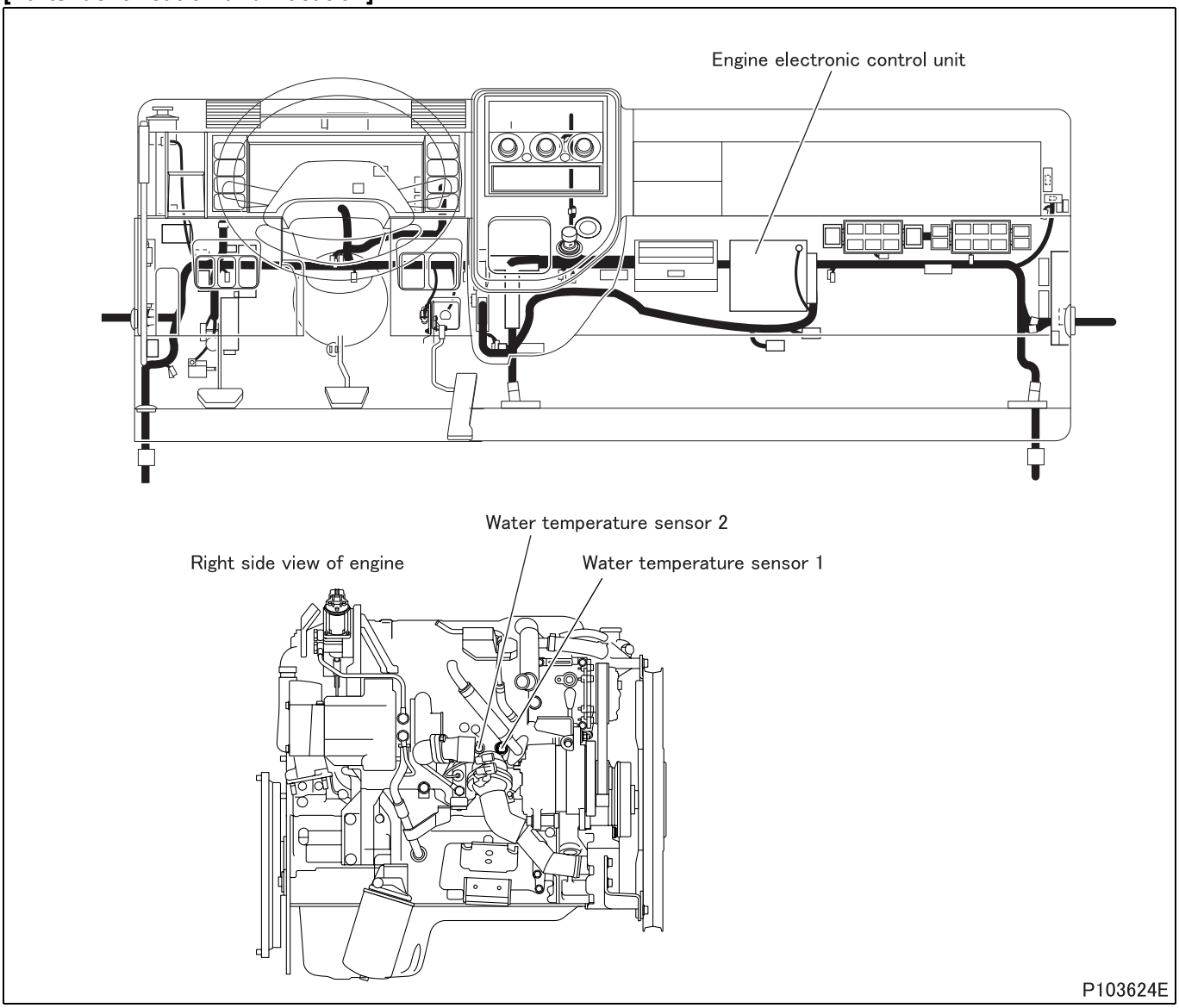

[Fault diagnosis]

- Perform checks in the sequence of the following steps.

Step 1	Inspection items		Inspection by control data
	Maintenance item		**<General Scanning Tool used>** • Measurement of item “Engine Coolant Temperature”. **<Multi-Use Tester used>** • Measure item No. 32 “Water Temperature 2” of Service Data.
	Inspection condition		–
	Requirements		• Cold engine: Equivalent to outside air temperature • During warm-up: Temperature gradually increased. • When engine is stopped after warm-up: Temperature gradually declines.
	Inspection result (Is the judging standard satisfied?)	YES	Go to transient fault (See Gr00.).
		NO	Go to step 2.

Step 2	Inspection items		Inspection by electronic control unit connector
	Maintenance item		Measure value of resistance between connector (GE96A) terminal No. 34 and ground.
	Inspection condition		Disconnect electronic control unit from harness and measure from connection side of harness connector.
	Requirements		• –20°C {–4°F} : 24.8 ± 2.5 kΩ • 0°C {32°F} : 8.62 kΩ (reference value) • 20°C {68°F} : 3.25 ± 0.33 kΩ • 60°C {140°F} : 620 Ω (reference value) • 80°C {176°F} : 300 Ω (reference value)
	Inspection result (Is the judging standard satisfied?)	YES	Go to step 3.
		NO	Go to step 4.

Step 3	Inspection items		Inspection of electronic control unit connector
	Maintenance item		Inspection of connector
	Inspection condition		–
	Requirements		• Connector is properly connected. • No trace of water entry is found. • No corrosion is found in terminal. • Connection to terminal is appropriate.
	Inspection result (Is the judging standard satisfied?)	YES	Go to step 7.
		NO	Modify connector.

Step 4	Inspection items		Inspection of water temperature sensor 2 connector
	Maintenance item		Inspection of connector
	Inspection condition		–
	Requirements		• Connector is properly connected. • No trace of water entry is found. • No corrosion is found in terminal. • Connection to terminal is appropriate.
	Inspection result (Is the judging standard satisfied?)	YES	Go to step 5.
		NO	Modify connector.

Step 5	Inspection items		Inspection of water temperature sensor 2 unit
	Maintenance item		Measure value of resistance between connector terminal No. 2 and body.
	Inspection condition		• Put water temperature sensor 2 in container filled with engine oil. • Heat the oil to each of the specified temperatures. Stir the oil well while doing so.
	Requirements		• –20°C {–4°F} : 24.8 ± 2.5 kΩ • 0°C {32°F} : 8.62 kΩ (reference value) • 20°C {68°F} : 3.25 ± 0.33 kΩ • 60°C {140°F} : 620 Ω (reference value) • 80°C {176°F} : 300 Ω (reference value)
	Inspection result (Is the judging standard satisfied?)	YES	Go to step 6
		NO	Replacement of sensor

<Step 5 inspection diagram>

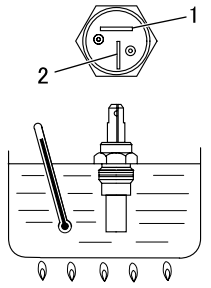

P19463

Step 6	Inspection items		Inspection of harness between electronic control unit and sensor
	Maintenance item		Check circuit between sensor connector terminal No. 2 and electronic control unit connector (GE96A) terminal No. 34.
	Inspection condition		Disconnect each device from harness and measure from connection side of harness connector.
	Requirements		There is continuity.
	Inspection result (Is the judging standard satisfied?)	YES	Go to step 7.
		NO	Modify harness.

Step 7	Inspection items		Inspection by control data
	Maintenance item		**<General Scanning Tool used>** • Measurement of item “Engine Coolant Temperature”. **<Multi-Use Tester used>** • Measure item No. 32 “Water Temperature 2” of Service Data.
	Inspection condition		–
	Requirements		• Cold engine: Equivalent to outside air temperature • During warm-up: Temperature gradually increased. • When engine is stopped after warm-up: Temperature gradually declines.
	Inspection result (Is the judging standard satisfied?)	YES	Go to transient fault (See Gr00.).
		NO	Replacement of electronic control unit

[Fault code]
Diagnosis code: P2185/Flash code: 21
[Monitor]
Failure of water temperature sensor 2
[Fault (outline)]
High signal range check
[Diagnosis check]
- Output voltage of water temperature sensor 2 is monitored.

[Code generation condition]
- Output voltage of water temperature sensor 2 remains over 4.9 V for 1 second. (sensor temperature: –37°C {–34.6°F} or less)
  (Warning lamp is lit and diagnosis code is displayed on third establishment of code generation condition.)

[Diagnosis check timing]
- Fault diagnosis is continuously performed during the driving cycle.

[Diagnostic requirement]
–

[Control effected by electronic control unit during fault]
- Related fault check is stopped.

[Probable cause of trouble]
- Open-circuit or short-circuit of harness between electronic control unit and water temperature sensor 2
- Malfunction of each connector
- Malfunction of sensor
- Malfunction of electronic control unit

[Recoverability]
- Recovered if signal becomes normal with starter switch in ON position.
  (Warning lamp is extinguished and diagnosis code is cleared at fourth display of diagnosis code after recovery.)

[Electronic Control Unit Connection Diagram]

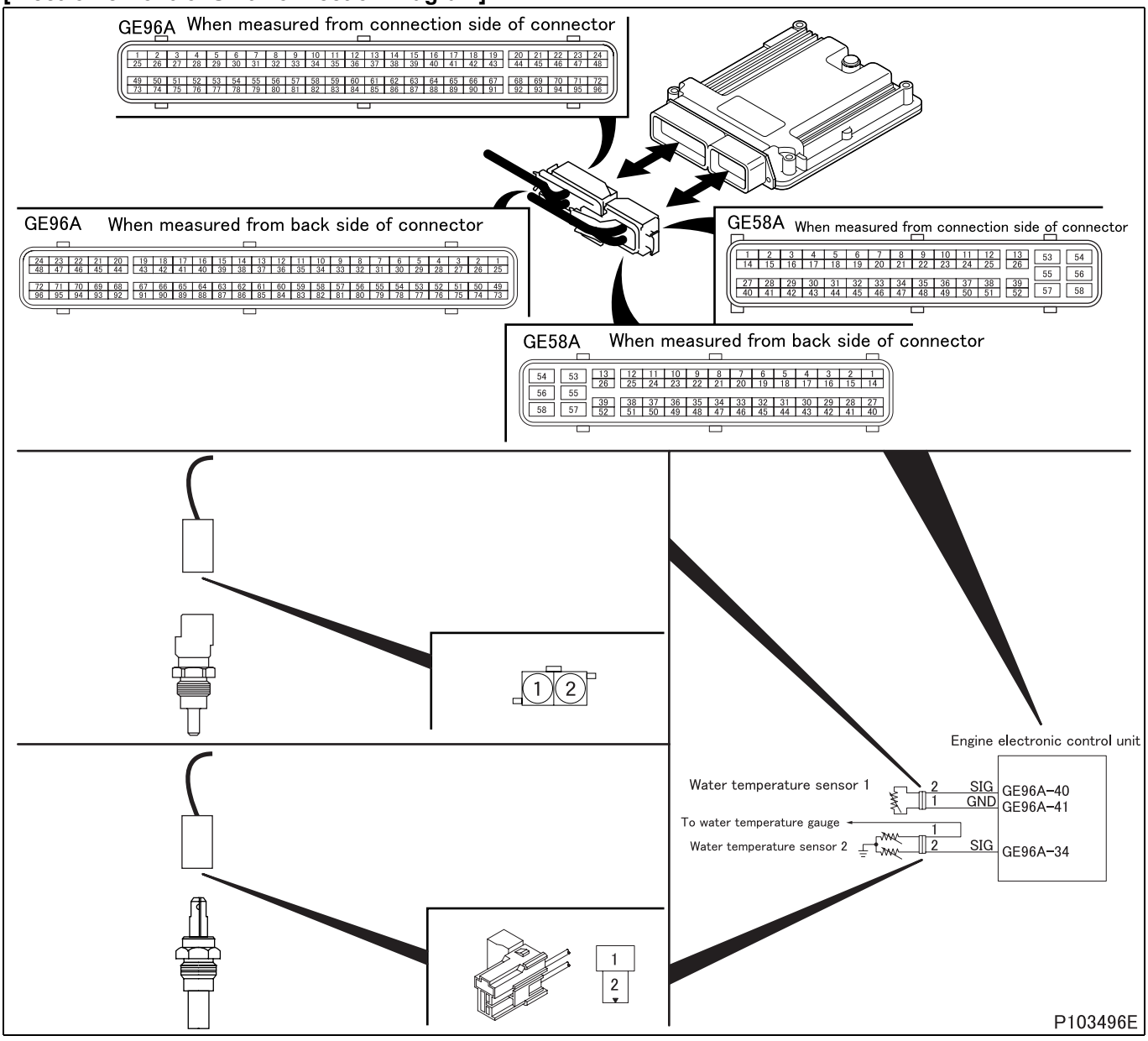

[Parts Identification and Location]

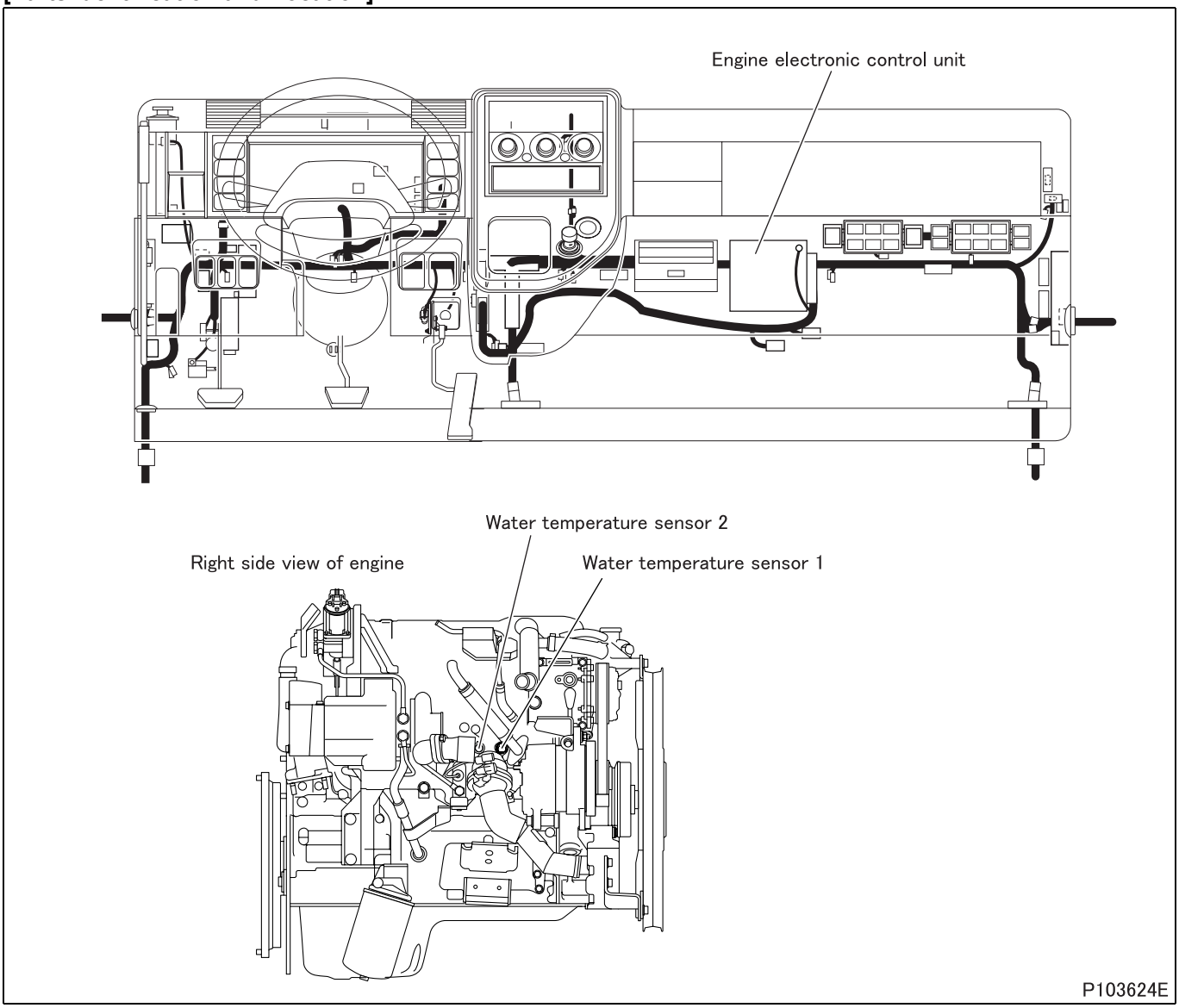

[Fault diagnosis]

- Perform checks in the sequence of the following steps.

Step 1	Inspection items		Inspection by control data
	Maintenance item		**<General Scanning Tool used>** • Measurement of item “Engine Coolant Temperature”. **<Multi-Use Tester used>** • Measure item No. 32 “Water Temperature 2” of Service Data.
	Inspection condition		–
	Requirements		• Cold engine: Equivalent to outside air temperature • During warm-up: Temperature gradually increased. • When engine is stopped after warm-up: Temperature gradually declines.
	Inspection result (Is the judging standard satisfied?)	YES	Go to transient fault (See Gr00.).
		NO	Go to step 2.

Step 2	Inspection items		Inspection by electronic control unit connector
	Maintenance item		Measure value of resistance between connector (GE96A) terminal No. 34 and ground.
	Inspection condition		Disconnect electronic control unit from harness and measure from connection side of harness connector.
	Requirements		• –20°C {–4°F}: 24.8 ± 2.5 kΩ • 0°C {32°F}: 8.62 kΩ (reference value) • 20°C {68°F}: 3.25 ± 0.33 kΩ • 60°C {140°F}: 620 Ω (reference value) • 80°C {176°F}: 300 Ω (reference value)
	Inspection result (Is the judging standard satisfied?)	YES	Go to step 3.
		NO	Go to step 4.

Step 3	Inspection items		Inspection of electronic control unit connector
	Maintenance item		Inspection of connector
	Inspection condition		–
	Requirements		• Connector is properly connected. • No trace of water entry is found. • No corrosion is found in terminal. • Connection to terminal is appropriate.
	Inspection result (Is the judging standard satisfied?)	YES	Go to step 7.
		NO	Modify connector.

Step 4	Inspection items		Inspection of water temperature sensor 2 connector
	Maintenance item		Inspection of connector
	Inspection condition		–
	Requirements		• Connector is properly connected. • No trace of water entry is found. • No corrosion is found in terminal. • Connection to terminal is appropriate.
	Inspection result (Is the judging standard satisfied?)	YES	Go to step 5.
		NO	Modify connector.

Step 5	Inspection items		Inspection of water temperature sensor 2 unit
	Maintenance item		Measure value of resistance between connector terminal No. 2 and body.
	Inspection condition		• Put water temperature sensor 2 in container filled with engine oil. • Heat the oil to each of the specified temperatures. Stir the oil well while doing so.
	Requirements		• –20°C {–4°F}: 24.8 ± 2.5 kΩ • 0°C {32°F}: 8.62 kΩ (reference value) • 20°C {68°F}: 3.25 ± 0.33 kΩ • 60°C {140°F}: 620 Ω (reference value) • 80°C {176°F}: 300 Ω (reference value)
	Inspection result (Is the judging standard satisfied?)	YES	Go to step 6.
		NO	Replacement of sensor

<Step 5 inspection diagram>

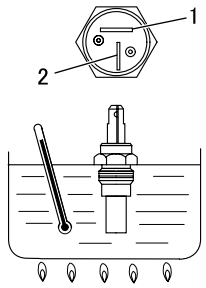

P19463

Step 6	Inspection items		Inspection of harness between electronic control unit and sensor
	Maintenance item		Check circuit between sensor connector terminal No. 2 and electronic control unit connector (GE96A) terminal No. 34.
	Inspection condition		Disconnect each device from harness and measure from connection side of harness connector.
	Requirements		There is continuity.
	Inspection result (Is the judging standard satisfied?)	YES	Go to step 7.
		NO	Modify harness.

Step 7	Inspection items		Inspection by control data
	Maintenance item		**<General Scanning Tool used>** • Measurement of item “Engine Coolant Temperature”. **<Multi-Use Tester used>** • Measure item No. 32 “Water Temperature 2” of Service Data.
	Inspection condition		–
	Requirements		**<General Scanning Tool used>** • During warm-up: Value of resistance gradually declines. • When engine is stopped after warm-up: Value of resistance gradually increased. **<Multi-Use Tester used>** • Cold engine: Equivalent to outside air temperature • During warm-up: Temperature gradually increased. • When engine is stopped after warm-up: Temperature gradually declines.
	Inspection result (Is the judging standard satisfied?)	YES	Go to transient fault (See Gr00.).
		NO	Replacement of electronic control unit

[Fault code]
Diagnosis code: P2187/Flash code: 52
[Monitor]
Abnormality in idling control
[Fault (outline)]
Idle fuelling too low
[Diagnosis check]
- Injection quantity during idling is monitored.

[Code generation condition]
- Actual injection quantity during idling remains below 3 mg/cycle for 10 seconds.
  (Warning lamp is lit and diagnosis code is displayed on third establishment of code generation condition.)

[Diagnosis check timing]
- Fault diagnosis is performed only once during the driving cycle.

[Diagnostic requirement]
- Warming-up control: normal
- PTO SW: OFF
- Water temperature: above 55°C {131°F}
- Diesel particulate filter regeneration control: not effected

[Control effected by electronic control unit during fault]
- Related fault check is stopped.

[Probable cause of trouble]
- Malfunction of injector

[Recoverability]
- Recovered if signal becomes normal when starter switch is turned OFF to ON (power supply resumed to electronic control unit).
  (Warning lamp is extinguished and diagnosis code is cleared at fourth display of diagnosis code after recovery.)

[Fault code]
Diagnosis code: P2188/Flash code: 52
[Monitor]
Abnormality in idling control
[Fault (outline)]
Idle fuelling too high
[Diagnosis check]
- Injection quantity during idling is monitored.

[Code generation condition]
- Actual injection quantity during idling remains excessive for 10 seconds.
  (Warning lamp is lit and diagnosis code is displayed on third establishment of code generation condition.)

[Diagnosis check timing]
- Fault diagnosis is performed only once during the driving cycle.

[Diagnostic requirement]
- Warming-up control: normal
- PTO SW: OFF
- Water temperature: above 55°C {131°F}
- Diesel particulate filter regeneration control: not effected

[Control effected by electronic control unit during fault]
- Related fault check is stopped.

[Probable cause of trouble]
- Malfunction of injector

[Recoverability]
- Recovered if signal becomes normal when starter switch is turned OFF to ON (power supply resumed to electronic control unit).
  (Warning lamp is extinguished and diagnosis code is cleared at fourth display of diagnosis code after recovery.)

[Fault code]
Diagnosis code: P2199/Flash code: 44
[Monitor]
Characteristic abnormality of intake air temperature sensor
[Fault (outline)]
Gain and offset drift
[Diagnosis check]
- Difference in temperature between intake air temperature sensor and boost air temperature sensor is monitored for deviation from specified value.

[Code generation condition]
- Difference in output voltage remains below 0°C {32°F} or over 35°C {95°F} for 10 seconds.
  (Warning lamp is lit and diagnosis code is displayed on third establishment of code generation condition.)

[Diagnosis check timing]
- Fault diagnosis is performed only once during the driving cycle.

[Diagnostic requirement]
- Engine operating mode: normal (engine in operation)
- Engine speed: 400 to 2000 rpm
- Fuel injection quantity: 3 to 50 mg/cyc
- Water temperature: 65 to 110°C {149 to 230°F}
- Time till above conditions were met: more than 5 seconds
- Exhaust gas recirculation valve: in order
- Intake throttle: in order
- Turbocharger actuator: in order
- Controller area network communication of each electronic drive unit (exhaust gas recirculation, intake throttle and turbocharger): in order
- Exhaust gas recirculation flow rate and exhaust gas recirculation valve operation: in order
- Air flow sensor: in order
- Atmospheric pressure sensor: in order
- Boost pressure sensor: in order
- Water temperature sensor: normal in output signal
- Intake air temperature sensor: normal in output signal
- Boost air temperature sensor: in order
- Exhaust gas recirculation system: in order
- Sensor 5 V power supply: in order
- Battery voltage: in order
- Injector: in order
- MPROP (rail pressure control valve): in order
- Fuel feed when engine is idling: in order
- Exhaust shutter 3-way magnetic valve: in order
- Exhaust gas recirculation temperature remains unchanged.

[Control effected by electronic control unit during fault]
- Intake air temperature is fixed at backup value.
- Related fault check is stopped.

[Probable cause of trouble]
- Open-circuit or short-circuit of harness between electronic control unit and boost air temperature sensor and intake air temperature sensor
- Malfunction of each connector
- Malfunction of sensor
- Malfunction of electronic control unit

[Recoverability]

- Recovered if signal becomes normal when starter switch is turned OFF to ON (power supply resumed to electronic control unit).
  (Warning lamp is extinguished and diagnosis code is cleared at fourth display of diagnosis code after recovery.)

[Electronic Control Unit Connection Diagram]

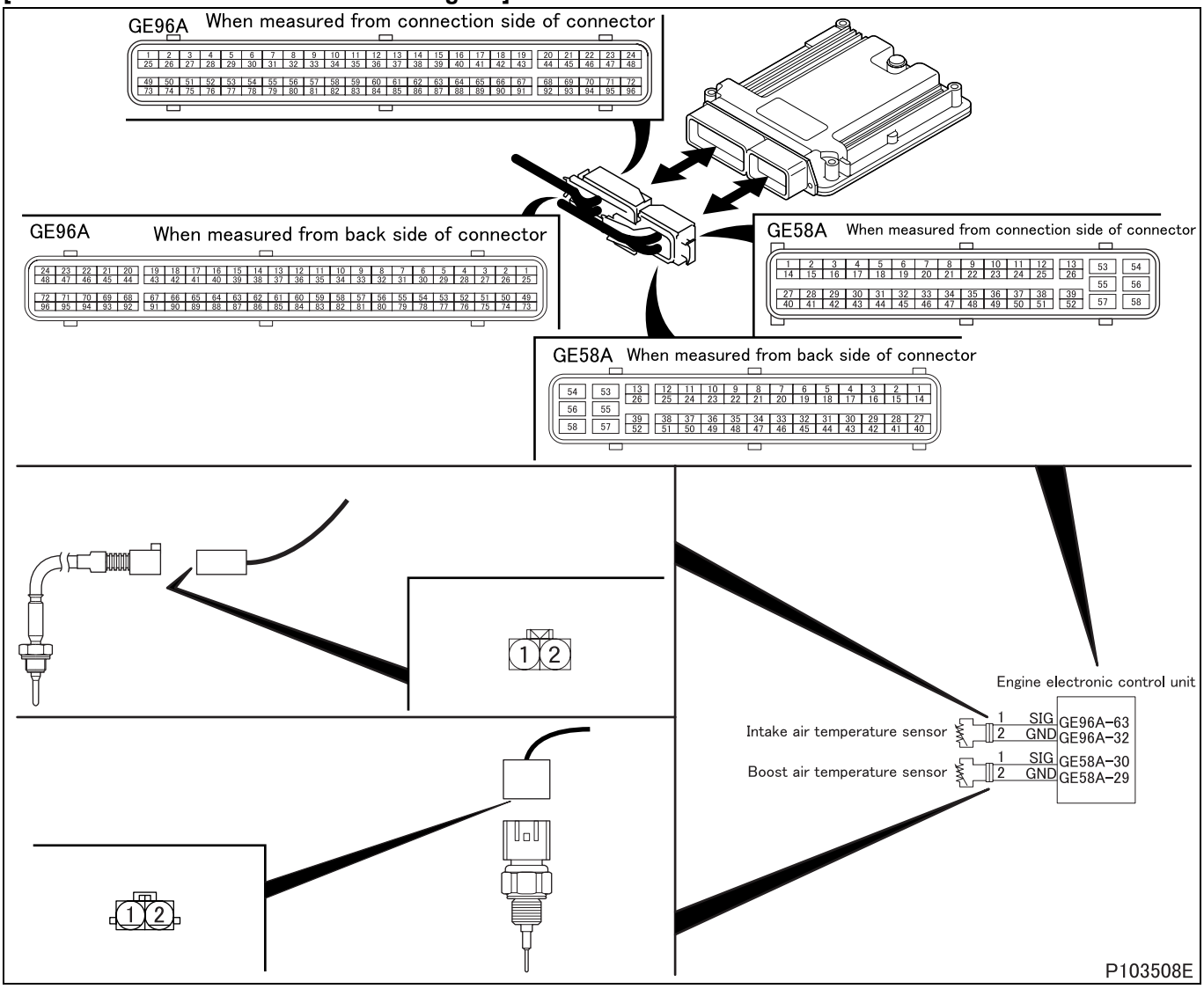

[Parts Identification and Location]

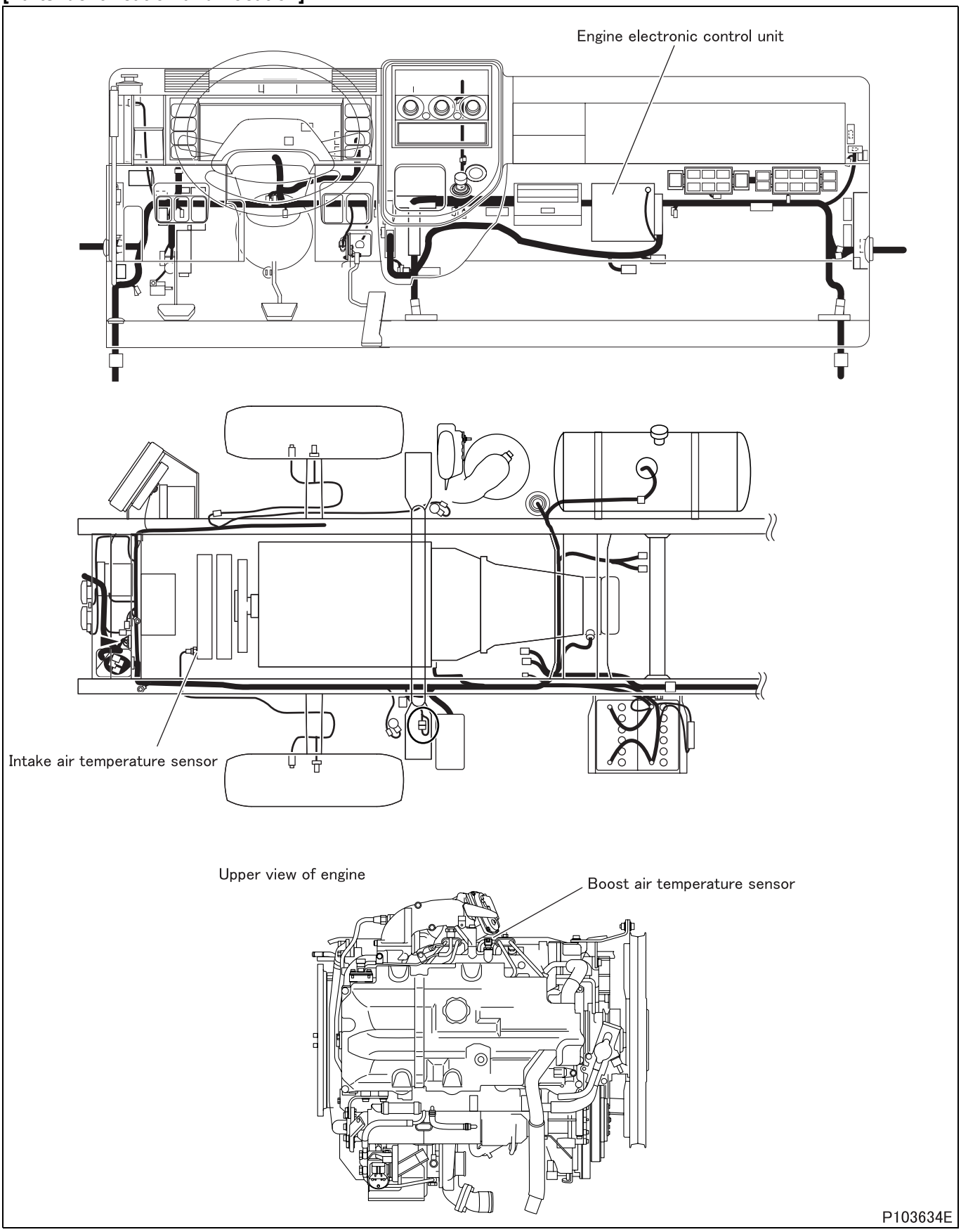

[Fault diagnosis]

- Perform checks in the sequence of the following steps.

Step 1	Inspection items		Inspection by control data
	Maintenance item		**<General Scanning Tool used>** • Measure item “Intake Air Temperature”. **<Multi-Use Tester used>** • Measure item No. 10 “Intake Air Temperature (EGR)” of Service Data.
	Inspection condition		–
	Requirements		Cold engine: Equivalent to outside air temperature
	Inspection result (Is the judging standard satisfied?)	YES	Go to step 5.
		NO	Go to step 2.

Step 2	Inspection items		Inspection by electronic control unit connector
	Maintenance item		Measure value of resistance between connector (GE58A) terminal No. 29 and 30.
	Inspection condition		Disconnect electronic control unit from harness and measure from connection side of harness connector.
	Requirements		• 0°C {32°F}: 162.3 $^{+48.8}_{-36.5}$ kΩ • 20°C {68°F}: 61.47 $^{+15.99}_{-12.35}$ kΩ • 80°C {176°F}: 6.120 $^{+1.095}_{-0.907}$ kΩ
	Inspection result (Is the judging standard satisfied?)	YES	Go to step 3.
		NO	Go to step 4.

Step 3	Inspection items		Inspection of electronic control unit connector
	Maintenance item		Inspection of connector
	Inspection condition		–
	Requirements		• Connector is properly connected. • No trace of water entry is found. • No corrosion is found in terminal. • Connection to terminal is appropriate.
	Inspection result (Is the judging standard satisfied?)	YES	Go to step 8.
		NO	Modify connector.

Step 4	Inspection items		Inspection of boost air temperature sensor
	Maintenance item		Inspection of connector
	Inspection condition		–
	Requirements		• Connector is properly connected. • No trace of water entry is found. • No corrosion is found in terminal. • Connection to terminal is appropriate.
	Inspection result (Is the judging standard satisfied?)	YES	Go to step 5.
		NO	Modify connector.

Step 5	Inspection items		Inspection of boost air temperature sensor unit
	Maintenance item		Measure value of resistance between connector terminal No. 1 and No. 2.
	Inspection condition		• Put boost air temperature sensor in container filled with engine oil. • Heat the oil to each of the specified temperatures. Stir the oil well while doing so.
	Requirements		• 0°C {32°F}: 162.3 $^{+48.8}_{-36.5}$ kΩ • 20°C {68°F}: 61.47 $^{+15.99}_{-12.35}$ kΩ • 80°C {176°F}: 6.120 $^{+1.095}_{-0.907}$ kΩ
	Inspection result (Is the judging standard satisfied?)	YES	Go to step 6.
		NO	Replacement of sensor

<Step 5 inspection diagram>

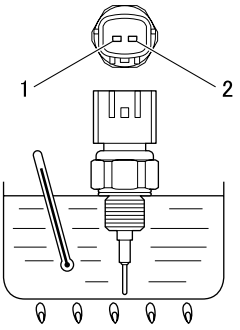

Step 6	Inspection items		Inspection of harness between electronic control unit and sensor (power supply)
	Maintenance item		Check circuit between sensor connector terminal No. 1 and electronic control unit connector (GE58A) terminal No. 30.
	Inspection condition		Disconnect each device from harness and measure from connection side of harness connector.
	Requirements		There is continuity.
	Inspection result (Is the judging standard satisfied?)	YES	Go to step 7.
		NO	Modify harness.

Step 7	Inspection items		Inspection of harness between electronic control unit and sensor (ground)
	Maintenance item		Check circuit between sensor connector terminal No. 2 and electronic control unit connector (GE58A) terminal No. 29.
	Inspection condition		Disconnect each device from harness and measure from connection side of harness connector.
	Requirements		There is continuity.
	Inspection result (Is the judging standard satisfied?)	YES	Go to step 8.
		NO	Modify harness.

Step 8	Inspection items		Inspection by control data
	Maintenance item		**<General Scanning Tool used>** • Measure item “Intake Air Temperature”. **<Multi-Use Tester used>** • Measure item No. 10 “Intake Air Temperature (EGR)” of Service Data.
	Inspection condition		–
	Requirements		Cold engine: Equivalent to outside air temperature
	Inspection result (Is the judging standard satisfied?)	YES	Go to transient fault (See Gr00.).
		NO	Replacement of electronic control unit

[Fault code]
Diagnosis code: P2228/Flash code: 19
[Monitor]
Failure of atmospheric pressure sensor (inside engine electronic control unit)
[Fault (outline)]
Low signal range check
[Diagnosis check]
- Output voltage of atmospheric pressure sensor (built in engine electronic control unit) is monitored.

[Code generation condition]
- Voltage from atmospheric pressure sensor (built in engine electronic control unit) remains below 2 V for 1 second. (sensor pressure: 507 mbar {7.35 psi} or less)
  (Warning lamp is lit and diagnosis code is displayed on third establishment of code generation condition.)

[Diagnosis check timing]
- Fault diagnosis is continuously performed during the driving cycle.

[Diagnostic requirement]
–

[Control effected by electronic control unit during fault]
- Exhaust gas recirculation control is stopped.
- Throttle controls disabled
- In-use performance counter is stopped.
- Related fault check is stopped.

[Probable cause of trouble]
- Malfunction of atmospheric pressure sensor
- Malfunction of electronic control unit

[Recoverability]
- Recovered if signal becomes normal when starter switch is turned OFF to ON (power supply resumed to electronic control unit).
  (Warning lamp is extinguished and diagnosis code is cleared at fourth display of diagnosis code after recovery.)

[Fault diagnosis]
- Perform checks in the sequence of the following steps.

Step 1	Inspection items		Inspection by control data
	Maintenance item		**<General Scanning Tool used>** • Measure item “Barometric Pressure”. **<Multi-Use Tester used>** • Measure item No. 20 “Atmospheric Pressure” of Service Data.
	Inspection condition		–
	Requirements		Standard atmospheric pressure (around 101.3 kPa {15 psi, 1.0 kgf/cm^2})
	Inspection result (Is the judging standard satisfied?)	YES	Go to transient fault (See Gr00.).
		NO	Replacement of electronic control unit

[Fault code]
Diagnosis code: P2229/Flash code: 19
[Monitor]
Failure of atmospheric pressure sensor (inside engine electronic control unit)
[Fault (outline)]
High signal range check
[Diagnosis check]
- Output voltage of atmospheric pressure sensor (built in engine electronic control unit) is monitored.

[Code generation condition]
- Voltage from atmospheric pressure sensor (built in engine electronic control unit) remains over 4.8 V for 1 second. (sensor pressure: 1215 mbar {17.62 psi} or more)
  (Warning lamp is lit and diagnosis code is displayed on third establishment of code generation condition.)

[Diagnosis check timing]
- Fault diagnosis is continuously performed during the driving cycle.

[Diagnostic requirement]
–

[Control effected by electronic control unit during fault]
- Exhaust gas recirculation control is stopped.
- Throttle controls disabled
- In-use performance counter is stopped.
- Related fault check is stopped.

[Probable cause of trouble]
- Malfunction of atmospheric pressure sensor
- Malfunction of electronic control unit

[Recoverability]
- Recovered if signal becomes normal when starter switch is turned OFF to ON (power supply resumed to electronic control unit).
  (Warning lamp is extinguished and diagnosis code is cleared at fourth display of diagnosis code after recovery.)

[Fault diagnosis]
- Perform checks in the sequence of the following steps.

Step 1	Inspection items		Inspection by control data
	Maintenance item		**<General Scanning Tool used>** • Measure item “Barometric Pressure”. **<Multi-Use Tester used>** • Measure item No. 20 “Atmospheric Pressure” of Service Data.
	Inspection condition		–
	Requirements		Standard atmospheric pressure (around 101.3 kPa {15 psi, 1.0 kgf/cm^2})
	Inspection result (Is the judging standard satisfied?)	YES	Go to transient fault (See Gr00.).
		NO	Replacement of electronic control unit

[Fault code]
Diagnosis code: P2263/Flash code: 51
[Monitor]
Turbocharger actuator system
[Fault (outline)]
- Turbocharger actuator slow response/steady state position deviation
- Plausibility
- Motor lock

[Diagnosis check]
- Turbocharger actuator shaft position is detected as actual position through position sensor and compared with target position for control by engine electronic control unit.

[Code generation condition]
Diagnosis code is generated under either of the following conditions. (Warning lamp is lit and diagnosis code is displayed on third establishment of code generation condition.)
- Actual position remains larger than target position by 15% or more for 5 seconds.
- Difference between actual position and target position remains less than 0 {0 in.} mm and more than 23 {0.9 in.} mm for 1 second.
- Initialization error remains for 1 second.

[Diagnosis check timing]
- Fault diagnosis is continuously performed during the driving cycle.

[Diagnostic requirement]
- Battery voltage: in order
- Turbocharger actuator: in order
- Controller area network communication of turbocharger electronic drive unit: in order

[Control effected by electronic control unit during fault]
Electronic control unit differs in the way of control by the diagnosis check item.
<Deviation in position, wiping (sliding)>
- Exhaust gas recirculation control is stopped.
- Throttle controls disabled
- Turbocharger control is stopped.
- Diesel particulate filter regeneration is stopped.
- Turbocharger actuator test is inhibited.
- Related fault check is stopped.

<Target value>
- Exhaust gas recirculation control is stopped.
- Throttle controls disabled
- Diesel particulate filter regeneration is stopped.
- Related fault check is stopped.

[Probable cause of trouble]
- Open-circuit or short-circuit of harness between electronic drive unit and turbocharger actuator
- Malfunction of each connector
- Malfunction of turbocharger motor (built in turbocharger actuator)
- Malfunction of turbocharger position sensor (built in turbocharger actuator)
- Malfunction of electronic drive unit
- Malfunction of electronic drive unit relay

[Recoverability]
- Recovered if signal becomes normal when starter switch is turned OFF to ON (power supply resumed to electronic control unit).
  (Warning lamp is extinguished and diagnosis code is cleared at fourth display of diagnosis code after recovery.)

[Electronic Control Unit Connection Diagram]

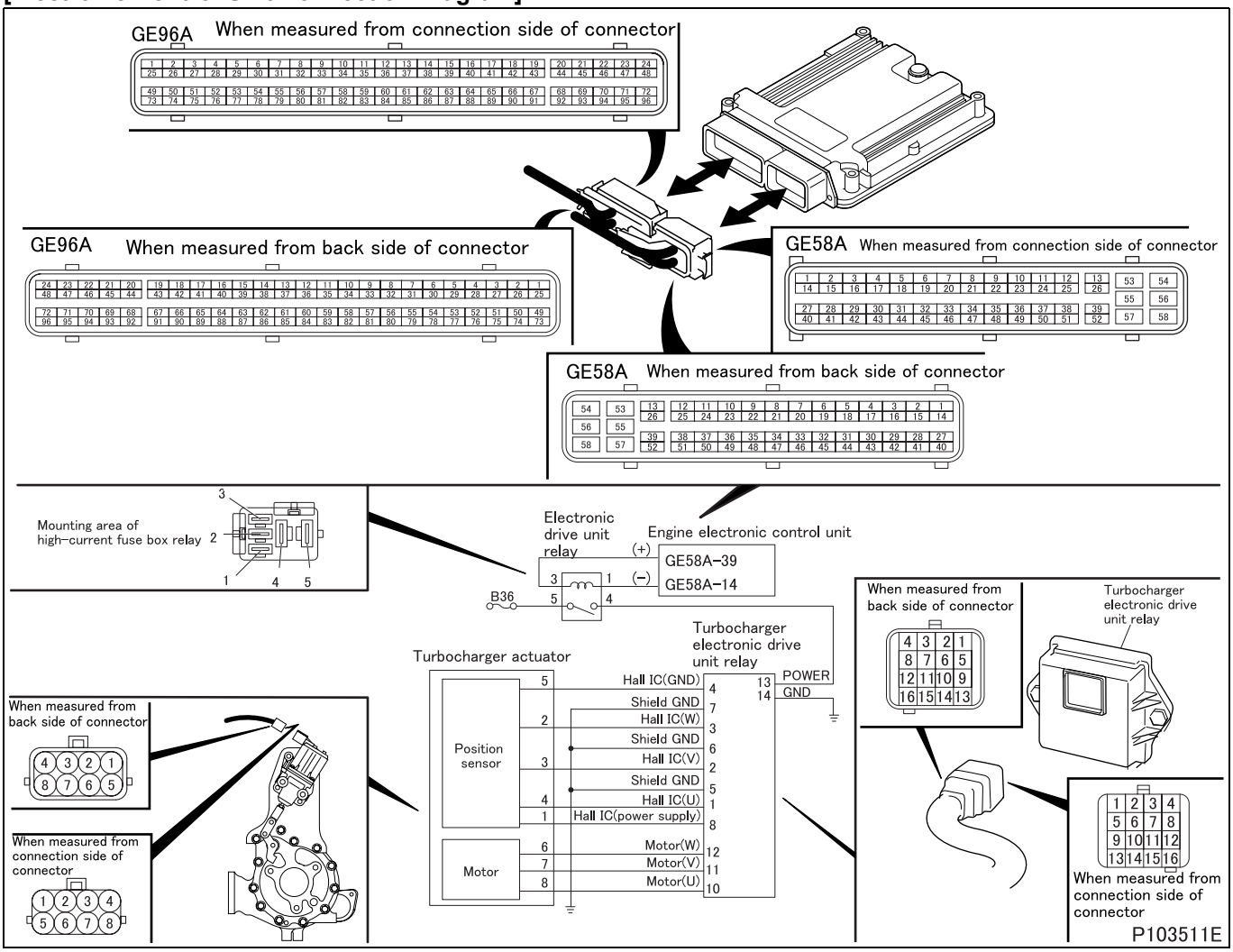

[Parts Identification and Location]

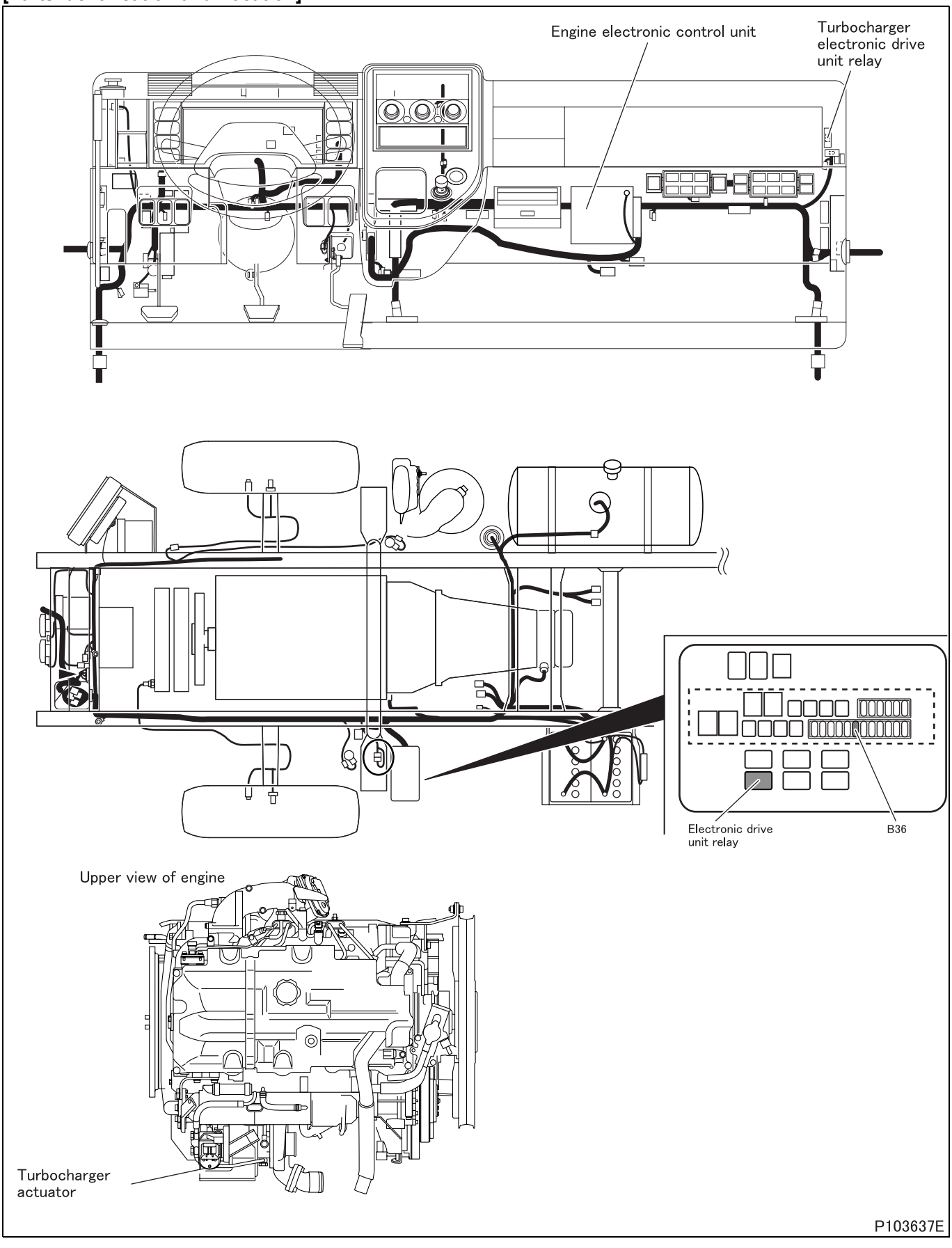

[Fault diagnosis]

- Perform checks in the sequence of the following steps.

Step 1	Inspection items		Inspection by control data
	Maintenance item		Perform actuator test item No. A4 “VGT 1”.
	Inspection condition		• Vehicle: stationary (vehicle speed 0 km/h {0 MPH}) • Starter switch: ON (engine started) • Transmission: neutral (parking satisfactory for automatic transmission) • Diagnosis switch: OFF (fuse removed)
	Requirements		Actual position matches with target value set by Multi-Use Tester (check with service data “54: Target VGT Position, 55: Actual VGT Position”). **NOTE** • **Set turbocharger opening to the range of 20 to 80%.** • **As initial operational check of turbocharger actuator is automatically effected immediately after starter switch is ON, perform actuator test by Multi-Use Tester after that check (approximately 5 seconds later).**
	Inspection result (Is the judging standard satisfied?)	YES	Go to transient fault (See Gr00.).
		NO	Go to step 2.

Step 2	Inspection items		Inspection of electronic drive unit connector
	Maintenance item		Inspection of connector
	Inspection condition		–
	Requirements		• Connector is properly connected. • No trace of water entry is found. • No corrosion is found in terminal. • Connection to terminal is appropriate.
	Inspection result (Is the judging standard satisfied?)	YES	Go to step 3.
		NO	Modify connector.

Step 3	Inspection items		Inspection of turbocharger actuator connector
	Maintenance item		Inspection of connector
	Inspection condition		–
	Requirements		• Connector is properly connected. • No trace of water entry is found. • No corrosion is found in terminal. • Connection to terminal is appropriate.
	Inspection result (Is the judging standard satisfied?)	YES	Go to step 4.
		NO	Modify connector.

Step 4	Inspection items		Inspection by control data
	Maintenance item		Check if following diagnosis codes occur simultaneously. • P0685 “EDU Relay (Open)” • P0686 “EDU Relay (Low)” • P0687 “EDU Relay (High)”
	Inspection condition		Starter switch: ON
	Requirements		No codes occur.
	Inspection result (Is the judging standard satisfied?)	YES	Go to step 5.
		NO	Inspect diagnosis code that is occurring.

Step 5	Inspection items		Inspection of electronic drive unit connector (power supply)
	Maintenance item		Measure value of voltage between connector terminal No. 13 (+) and 14 (–).
	Inspection condition		• Disconnect connector and measure from harness side. • Starter switch: ON • Perform actuator test item No. AF “EDU Relay”.
	Requirements		Same as battery voltage.
	Inspection result (Is the judging standard satisfied?)	YES	Go to step 10.
		NO	Go to step 6.

Step 6	Inspection items		Inspection of relay connector
	Maintenance item		Inspection of connector
	Inspection condition		–
	Requirements		• Connector is properly connected. • No trace of water entry is found. • No corrosion is found in terminal. • Connection to terminal is appropriate.
	Inspection result (Is the judging standard satisfied?)	YES	Go to step 7.
		NO	Modify connector.

Step 7	Inspection items		Inspection of harness between fuse and relay
	Maintenance item		Check circuit between fuse No. B35 and relay connector terminal No. 5.
	Inspection condition		Disconnect each device from harness and measure from connection side of harness connector.
	Requirements		There is continuity.
	Inspection result (Is the judging standard satisfied?)	YES	Go to step 8.
		NO	Modify harness.

Step 8	Inspection items		Inspection of harness between relay and electronic drive unit
	Maintenance item		Check circuit between relay connector terminal No. 4 and electronic drive unit connector terminal No. 13.
	Inspection condition		Disconnect each device from harness and measure from connection side of harness connector.
	Requirements		There is continuity.
	Inspection result (Is the judging standard satisfied?)	YES	After replacement of electronic drive unit relay, go to step 9.
		NO	Modify harness.

Step 9	Inspection items		Inspection of harness between electronic drive unit and ground
	Maintenance item		Check circuit between following electronic drive unit connector terminals. • Electronic drive unit ground: terminal No. 14 - chassis ground • Sensor shield ground (U): terminal No. 5 - 14 • Sensor shield ground (V): terminal No. 6 - 14 • Sensor shield ground (W): terminal No. 7 - 14 • Sensor ground: terminal No. 4 - 14
	Inspection condition		Disconnect each device from harness and measure from connection side of harness connector.
	Requirements		There is continuity.
	Inspection result (Is the judging standard satisfied?)	YES	Go to step 10.
		NO	Modify harness.

Step 10	Inspection items		Inspection of electronic drive unit connector (motor)
	Maintenance item		Measure value of resistance between following connector terminals • Between U - V: 10 - 11 • Between U - W: 10 - 12 • Between V - W: 11 - 12
	Inspection condition		–
	Requirements		2.1 ± 0.3 Ω
	Inspection result (Is the judging standard satisfied?)	YES	Go to step 13.
		NO	Go to step 11.

Step 11	Inspection items		Inspection of harness between electronic drive unit and turbocharger actuator (motor)
	Maintenance item		Check circuit between following connector terminals. • Motor (U): electronic drive unit connector terminal No. 10 - turbocharger actuator connector No. 8 • Motor (V): electronic drive unit connector terminal No. 11 - turbocharger actuator connector No. 7 • Motor (W): electronic drive unit connector terminal No. 12 - turbocharger actuator connector No. 6
	Inspection condition		Disconnect each device from harness and measure from connection side of harness connector.
	Requirements		There is continuity.
	Inspection result (Is the judging standard satisfied?)	YES	Go to step 12.
		NO	Modify harness.

Step 12	Inspection items		Inspection of turbocharger actuator unit (motor)
	Maintenance item		Measure value of resistance between following turbocharger actuator connector terminals • Between U - V: 8 - 7 • Between U - W: 8 - 6 • Between V - W: 7 - 6
	Inspection condition		• Keep turbocharger actuator installed on vehicle. • Remove harness connector and measure turbocharger actuator side.
	Requirements		2.1 ± 0.3 Ω
	Inspection result (Is the judging standard satisfied?)	YES	Go to step 13.
		NO	Replacement of turbocharger actuator

<Step 12 inspection diagram>

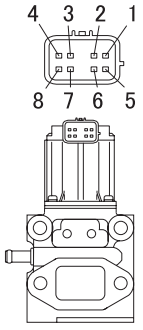

P68994

Step 13	Inspection items		Inspection of turbocharger actuator connector (position sensor: power supply)
	Maintenance item		Measure value of voltage between connector terminal No. 1 (+) and 5 (–).
	Inspection condition		• Measure from back side of harness connector with each device connected to harness. • Starter switch: ON
	Requirements		10 V
	Inspection result (Is the judging standard satisfied?)	YES	Go to step 14.
		NO	Go to step 15.

Step 14	Inspection items		Inspection of electronic drive unit connector (position sensor: signal)
	Maintenance item		Measure values of voltage between the following electronic drive unit connector terminals. • U signal output: terminal 1 (+) - 4 (–) • V signal output: terminal 2 (+) - 4 (–) • W signal output: terminal 3 (+) - 4 (–)
	Inspection condition		• Measure from back side of harness connector with each device connected to harness. • Starter switch: ON • Perform actuator test item No. A4 “VGT 1”.
	Requirements		8 to 11 V
	Inspection result (Is the judging standard satisfied?)	YES	Go to step 16.
		NO	Go to step 15.

Step 15	Inspection items		Inspection of harness between electronic drive unit and turbocharger actuator (position sensor)
	Maintenance item		Check circuit between following connector terminals. • Sensor (power supply): electronic drive unit connector terminal No. 8 - turbocharger actuator connector No. 1 • Sensor (U): electronic drive unit connector terminal No. 1 - turbocharger actuator connector No. 4 • Sensor (V): electronic drive unit connector terminal No. 2 - turbocharger actuator connector No. 3 • Sensor (W): electronic drive unit connector terminal No. 3 - turbocharger actuator connector No. 2 • Sensor (ground): electronic drive unit connector terminal No. 4 - turbocharger actuator connector No. 5
	Inspection condition		Disconnect each device from harness and measure from connection side of harness connector.
	Requirements		There is continuity.
	Inspection result (Is the judging standard satisfied?)	YES	After replacement of turbocharger, go to step 16.
		NO	Modify harness.

Step 16	Inspection items		Inspection by control data
	Maintenance item		Perform actuator test item No. A4 “VGT 1”.
	Inspection condition		• Vehicle: stationary (vehicle speed 0 km/h {0 MPH}) • Starter switch: ON (engine started) • Transmission: neutral (parking satisfactory for automatic transmission) • Diagnosis switch: OFF (fuse removed)
	Requirements		Actual position matches with target value set by Multi-Use Tester (check with service data “54: Target VGT Position, 55: Actual VGT Position”). **NOTE** • **Set turbocharger opening to the range of 20 to 80%.** • **As initial operational check of turbocharger actuator is automatically effected immediately after starter switch is ON, perform actuator test by Multi-Use Tester after that check (approximately 5 seconds later).**
	Inspection result (Is the judging standard satisfied?)	YES	Go to transient fault (See Gr00.).
		NO	Replacement of electronic drive unit

[Fault code]
Diagnosis code: P2413/Flash code: 67, 95
[Monitor]
Abnormality in exhaust gas recirculation valve position
[Fault (outline)]
- Exhaust gas recirculation valve slow response/steady state position deviation
- Plausibility

[Diagnosis check]
- Exhaust gas recirculation valve position is detected as actual position through position sensor and compared with target position for control by engine electronic control unit.

[Code generation condition]
Diagnosis code is generated under either of the following conditions. (Warning lamp is lit and diagnosis code is displayed on third establishment of code generation condition.)
- Difference between actual valve position and target valve position remains more than 2 mm {0.08 in.} for 5 seconds.
- Target valve position calculated by engine electronic control unit remains out of specified limits (upper limit: 10 mm {0.39 in.}; lower limit: 0 mm {0 in.}) for 1 second.

[Diagnosis check timing]
- Fault diagnosis is continuously performed during the driving cycle.

[Diagnostic requirement]
- Battery voltage: in order
- Exhaust gas recirculation valve: in order
- Controller area network of electronic drive unit: in order

[Control effected by electronic control unit during fault]
Electronic control unit differs in the way of control by the diagnosis check item.
<Deviation in position>
- Exhaust gas recirculation control is stopped.
- Throttle controls disabled
- Turbocharger control is stopped.
- Diesel particulate filter regeneration is stopped (manual regeneration is feasible).
- Related fault check is stopped.

<Target value>
- Exhaust gas recirculation control is stopped.
- Throttle controls disabled
- Diesel particulate filter regeneration is stopped (manual regeneration is feasible).
- Related fault check is stopped.

[Probable cause of trouble]
- Open-circuit or short-circuit of harness between electronic drive unit and exhaust gas recirculation valve
- Malfunction of each connector
- Malfunction of exhaust gas recirculation motor (built in exhaust gas recirculation valve)
- Malfunction of exhaust gas recirculation position sensor (built in exhaust gas recirculation valve)
- Malfunction of electronic drive unit
- Malfunction of electronic drive unit relay

[Recoverability]
- Recovered if signal becomes normal when starter switch is turned OFF to ON (power supply resumed to electronic control unit).
  (Warning lamp is extinguished and diagnosis code is cleared at fourth display of diagnosis code after recovery.)

[Electronic Control Unit Connection Diagram]

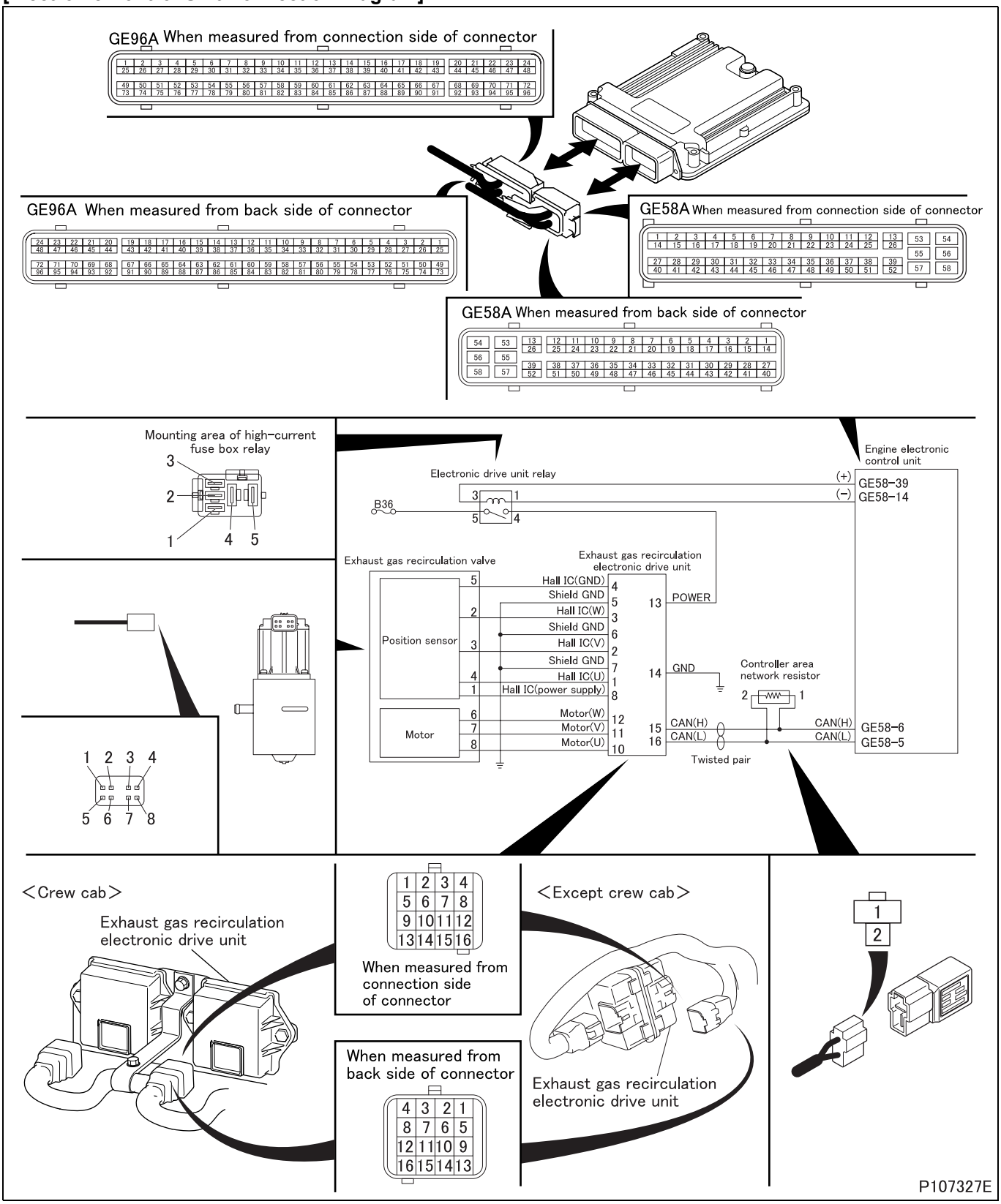

[Parts Identification and Location]

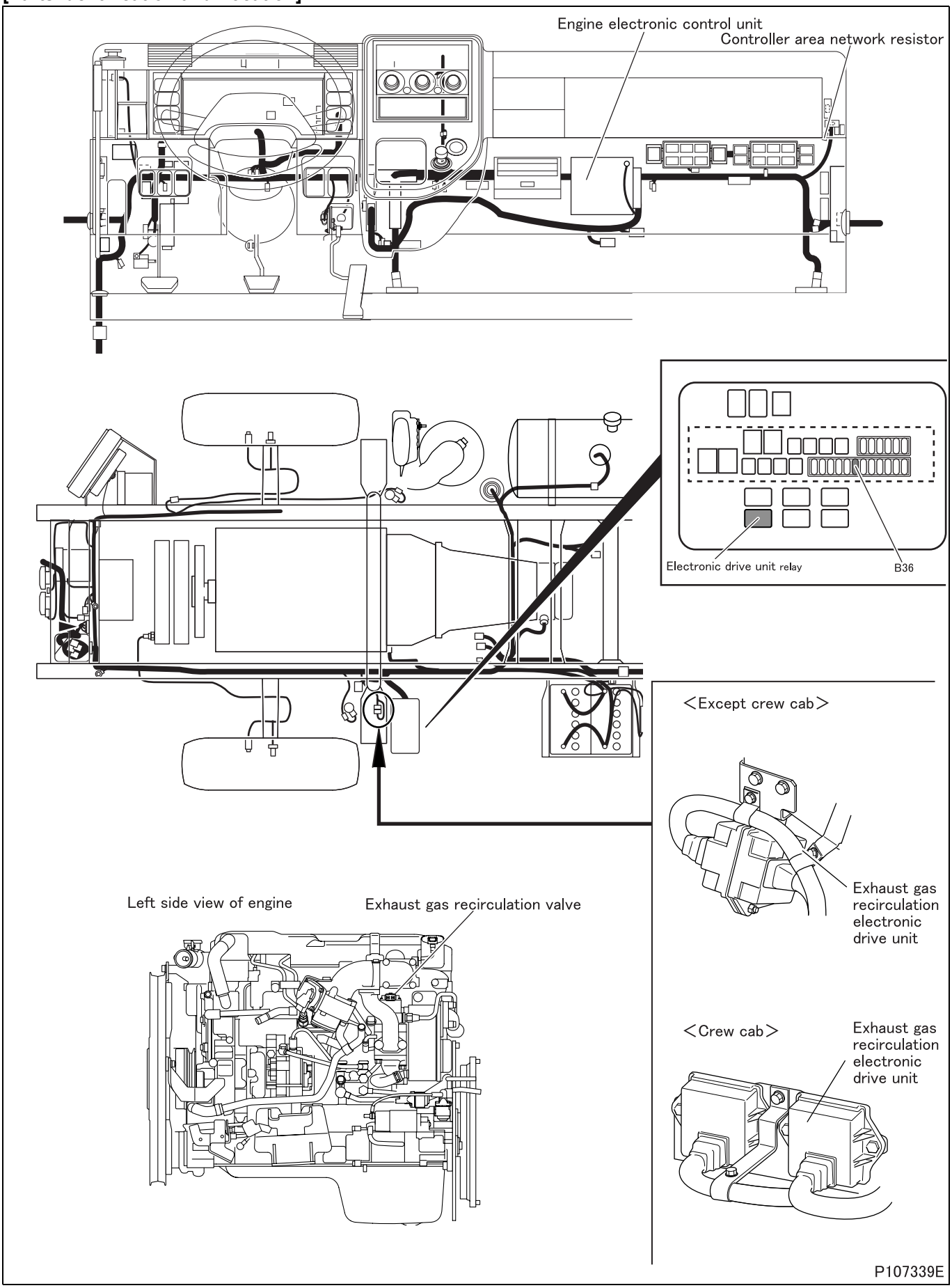

[Fault diagnosis]

- Perform checks in the sequence of the following steps.

Step 1	Inspection items		Inspection by control data
	Maintenance item		Perform actuator test item No. A0 “EGR 1”.
	Inspection condition		• Vehicle: stationary (vehicle speed 0 km/h {0 MPH}) • Starter switch: ON (engine started) • Transmission: neutral (parking satisfactory for automatic transmission) • Diagnosis switch: OFF (fuse removed)
	Requirements		Actual position matches with target value set by Multi-Use Tester (check with service data “51: Actual EGR Valve Position”). **NOTE** • **As initial operational check of exhaust gas recirculation valve is automatically effected immediately after starter switch is ON, perform actuator test by Multi-Use Tester after that check (approximately 5 seconds later).**
	Inspection result (Is the judging standard satisfied?)	YES	Go to transient fault (See Gr00.).
		NO	Go to step 2.

Step 2	Inspection items		Inspection of electronic drive unit connector
	Maintenance item		Inspection of connector
	Inspection condition		–
	Requirements		• Connector is properly connected. • No trace of water entry is found. • No corrosion is found in terminal. • Connection to terminal is appropriate.
	Inspection result (Is the judging standard satisfied?)	YES	Go to step 3.
		NO	Modify connector.

Step 3	Inspection items		Inspection of exhaust gas recirculation valve connector
	Maintenance item		Inspection of connector
	Inspection condition		–
	Requirements		• Connector is properly connected. • No trace of water entry is found. • No corrosion is found in terminal. • Connection to terminal is appropriate.
	Inspection result (Is the judging standard satisfied?)	YES	Go to step 4.
		NO	Modify connector.

Step 4	Inspection items		Inspection by control data
	Maintenance item		Check if following diagnosis codes occur simultaneously. • P0685 “EDU Relay (Open)” • P0686 “EDU Relay (Low)” • P0687 “EDU Relay (High)”
	Inspection condition		Starter switch: ON
	Requirements		No codes occur.
	Inspection result (Is the judging standard satisfied?)	YES	Go to step 5.
		NO	Inspect diagnosis code that is occurring.

Step 5	Inspection items		Inspection of electronic drive unit connector (power supply)
	Maintenance item		Measure value of voltage between connector terminal No. 13 (+) and 14 (–).
	Inspection condition		• Disconnect connector and measure from harness side. • Starter switch: ON • Perform actuator test item No. AF “EDU Relay”.
	Requirements		Same as battery voltage.
	Inspection result (Is the judging standard satisfied?)	YES	Go to step 10.
		NO	Go to step 6.

Step 6	Inspection items		Inspection of relay connector
	Maintenance item		Inspection of connector
	Inspection condition		–
	Requirements		• Connector is properly connected. • No trace of water entry is found. • No corrosion is found in terminal. • Connection to terminal is appropriate.
	Inspection result (Is the judging standard satisfied?)	YES	Go to step 7.
		NO	Modify connector.

Step 7	Inspection items		Inspection of harness between fuse and relay
	Maintenance item		Check circuit between fuse No. B35 and relay connector terminal No. 5.
	Inspection condition		Disconnect each device from harness and measure from connection side of harness connector.
	Requirements		There is continuity.
	Inspection result (Is the judging standard satisfied?)	YES	Go to step 8.
		NO	Modify harness.

Step 8	Inspection items		Inspection of harness between relay and electronic drive unit
	Maintenance item		Check circuit between relay connector terminal No. 4 and electronic drive unit connector terminal No. 13.
	Inspection condition		Disconnect each device from harness and measure from connection side of harness connector.
	Requirements		There is continuity.
	Inspection result (Is the judging standard satisfied?)	YES	After replacement of electronic drive unit relay, go to step 9.
		NO	Modify harness.

Step 9	Inspection items		Inspection of harness between electronic drive unit and ground
	Maintenance item		Check circuit between following electronic drive unit connector terminals. • Electronic drive unit ground: terminal No. 14 - chassis ground • Sensor shield ground (U): terminal No. 5 - 14 • Sensor shield ground (V): terminal No. 6 - 14 • Sensor shield ground (W): terminal No. 7 - 14 • Sensor ground: terminal No. 4 - 14
	Inspection condition		Disconnect each device from harness and measure from connection side of harness connector.
	Requirements		There is continuity.
	Inspection result (Is the judging standard satisfied?)	YES	Go to step 10.
		NO	Modify harness.

Step 10	Inspection items		Inspection of electronic drive unit connector (motor)
	Maintenance item		Measure value of resistance between following connector terminals • Between U - V: 10 - 11 • Between U - W: 10 - 12 • Between V - W: 11 - 12
	Inspection condition		–
	Requirements		2.1 ± 0.3 Ω
	Inspection result (Is the judging standard satisfied?)	YES	Go to step 13.
		NO	Go to step 11.

Step 11	Inspection items		Inspection of harness between electronic drive unit and turbocharger actuator (motor)
	Maintenance item		Check circuit between following connector terminals. • Motor (U): electronic drive unit connector terminal No. 10 - turbocharger actuator connector No. 8 • Motor (V): electronic drive unit connector terminal No. 11 - turbocharger actuator connector No. 7 • Motor (W): electronic drive unit connector terminal No. 12 - turbocharger actuator connector No. 6
	Inspection condition		Disconnect each device from harness and measure from connection side of harness connector.
	Requirements		There is continuity.
	Inspection result (Is the judging standard satisfied?)	YES	Go to step 12.
		NO	Modify harness.

Step 12	Inspection items		Inspection of exhaust gas recirculation valve unit (motor)
	Maintenance item		Measure value of resistance between following exhaust gas recirculation valve connector terminals • Between U - V: 8 - 7 • Between U - W: 8 - 6 • Between V - W: 7 - 6
	Inspection condition		• Keep exhaust gas recirculation valve installed on vehicle. • Remove harness connector and measure exhaust gas recirculation valve side.
	Requirements		2.1 ± 0.3 Ω
	Inspection result (Is the judging standard satisfied?)	YES	Go to step 13.
		NO	Replacement of turbocharger actuator

<Step 12 inspection diagram>

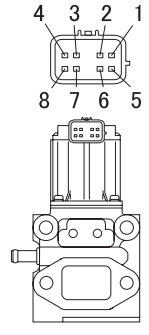

P68994

Step 13	Inspection items		Inspection of exhaust gas recirculation valve connector (position sensor: power supply)
	Maintenance item		Measure value of voltage between connector terminal No. 1 (+) and 5 (–).
	Inspection condition		• Measure from back side of harness connector with each device connected to harness. • Starter switch: ON
	Requirements		10 V
	Inspection result (Is the judging standard satisfied?)	YES	Go to step 14.
		NO	Go to step 15.

Step 14	Inspection items		Inspection of electronic drive unit connector (position sensor: signal)
	Maintenance item		Measure values of voltage between the following electronic drive unit connector terminals. • U signal output: terminal 1 (+) - 4 (–) • V signal output: terminal 2 (+) - 4 (–) • W signal output: terminal 3 (+) - 4 (–)
	Inspection condition		• Measure from back side of harness connector with each device connected to harness. • Starter switch: ON • Perform actuator test item No. A0 “EGR 1”.
	Requirements		8 to 11 V
	Inspection result (Is the judging standard satisfied?)	YES	Go to step 16.
		NO	Go to step 15.

Step 15	Inspection items		Inspection of harness between electronic drive unit and exhaust gas recirculation valve (position sensor)
	Maintenance item		Check circuit between following connector terminals. • Sensor (power supply): electronic drive unit connector terminal No. 8 - exhaust gas recirculation valve connector No. 1 • Sensor (U): electronic drive unit connector terminal No. 1 - exhaust gas recirculation valve connector No. 4 • Sensor (V): electronic drive unit connector terminal No. 2 - exhaust gas recirculation valve connector No. 3 • Sensor (W): electronic drive unit connector terminal No. 3 - exhaust gas recirculation valve connector No. 2 • Sensor (ground): electronic drive unit connector terminal No. 4 - exhaust gas recirculation valve connector No. 5
	Inspection condition		Disconnect each device from harness and measure from connection side of harness connector.
	Requirements		There is continuity.
	Inspection result (Is the judging standard satisfied?)	YES	After replacement of exhaust gas recirculation, go to step 16.
		NO	Modify harness.

Step 16	Inspection items		Inspection by control data
	Maintenance item		• Perform actuator test item No. A0 “EGR 1”.
	Inspection condition		• Vehicle: stationary (vehicle speed 0 km/h {0 MPH}) • Starter switch: ON (engine started) • Transmission: neutral (parking satisfactory for automatic transmission) • Diagnosis switch: OFF (fuse removed)
	Requirements		Actual position matches with target value set by Multi-Use Tester (check with service data “51: Actual EGR Valve Position”). **NOTE** • **As initial operational check of exhaust gas recirculation valve is automatically effected immediately after starter switch is ON, perform actuator test by Multi-Use Tester after that check (approximately 5 seconds later).**
	Inspection result (Is the judging standard satisfied?)	YES	Go to transient fault (See Gr00.).
		NO	Replacement of electronic drive unit

[Fault code]
Diagnosis code: P2423/Flash code: 46
[Monitor]
Failure of front oxidation catalyst
[Fault (outline)]
Inactive (unable to generate exotherm for diesel particulate filter regeneration)
[Diagnosis check]
- Heating condition of catalyst is monitored during diesel particulate filter regeneration.
- Actual post injection quantity during diesel particulate filter regeneration and post injection quantity estimated by engine electronic control unit are compared.

[Code generation condition]
Either of the following occurs. (Warning lamp is lit and diagnosis code is displayed on first establishment of code generation condition.)
- Post injection quantity used for diesel particulate filter regeneration exceeds 14.8 g {0.52 oz}.
- Difference in total between actual post injection quantity and estimated post injection quantity is more than specified value.
- When all of the following conditions occur;
  - Diesel particulate filter inlet temperature is below 450°C {842°F}.
  - Diesel particulate filter inlet temperature after start of filter regeneration is below 100°C {212°F}.
  - Difference between diesel particulate filter inlet temperature and catalytic inlet temperature is less than 150°C {302°F}.

[Diagnosis check timing]
- Fault diagnosis is performed each time when the diesel particulate filter regeneration control is activated.

[Diagnostic requirement]
- Diesel particulate filter regeneration control: normal (automatic or manual regeneration)
- Fuel injection quantity: above 2.5 mg/cyc
- Engine speed: 600 to 3000 rpm
- Water temperature: 65 to 110°C {149 to 230°F}
- Post injection quantity: above 0.05 mg/cyc
- Diesel particulate filter inlet temperature: above 250°C {482°F}
- Engine operating mode: normal (engine in operation)
- Time till above conditions were met: more than 3 seconds
- Once monitor has been enabled, monitoring continues unless any above conditions are not met for at time: >3s
- Estimated post injection quantity: more than 40 mg (automatic diesel particulate filter regeneration); more than 30 mg (manual diesel particulate filter regeneration)
- Exhaust gas recirculation valve: in order
- Intake throttle: in order
- Turbocharger actuator: in order
- Controller area network communication of each electronic drive unit (exhaust gas recirculation, intake throttle and turbocharger): in order
- Water temperature sensor: in order
- DPF temperature sensor 1: in order
- Catalytic temperature sensor: in order
- Sensor 5 V power supply: in order
- Battery voltage: in order
- MPROP (rail pressure control valve): in order
- Injector: in order

[Control effected by electronic control unit during fault]
- Diesel particulate filter regeneration is stopped.

[Probable cause of trouble]
- Deterioration of diesel particulate filter (front oxidation catalyst)

[Recoverability]

- Recovered if signal becomes normal when starter switch is turned OFF to ON (power supply resumed to electronic control unit).
  (Warning lamp is extinguished and diagnosis code is cleared at fourth display of diagnosis code after recovery.)

[Electronic Control Unit Connection Diagram]

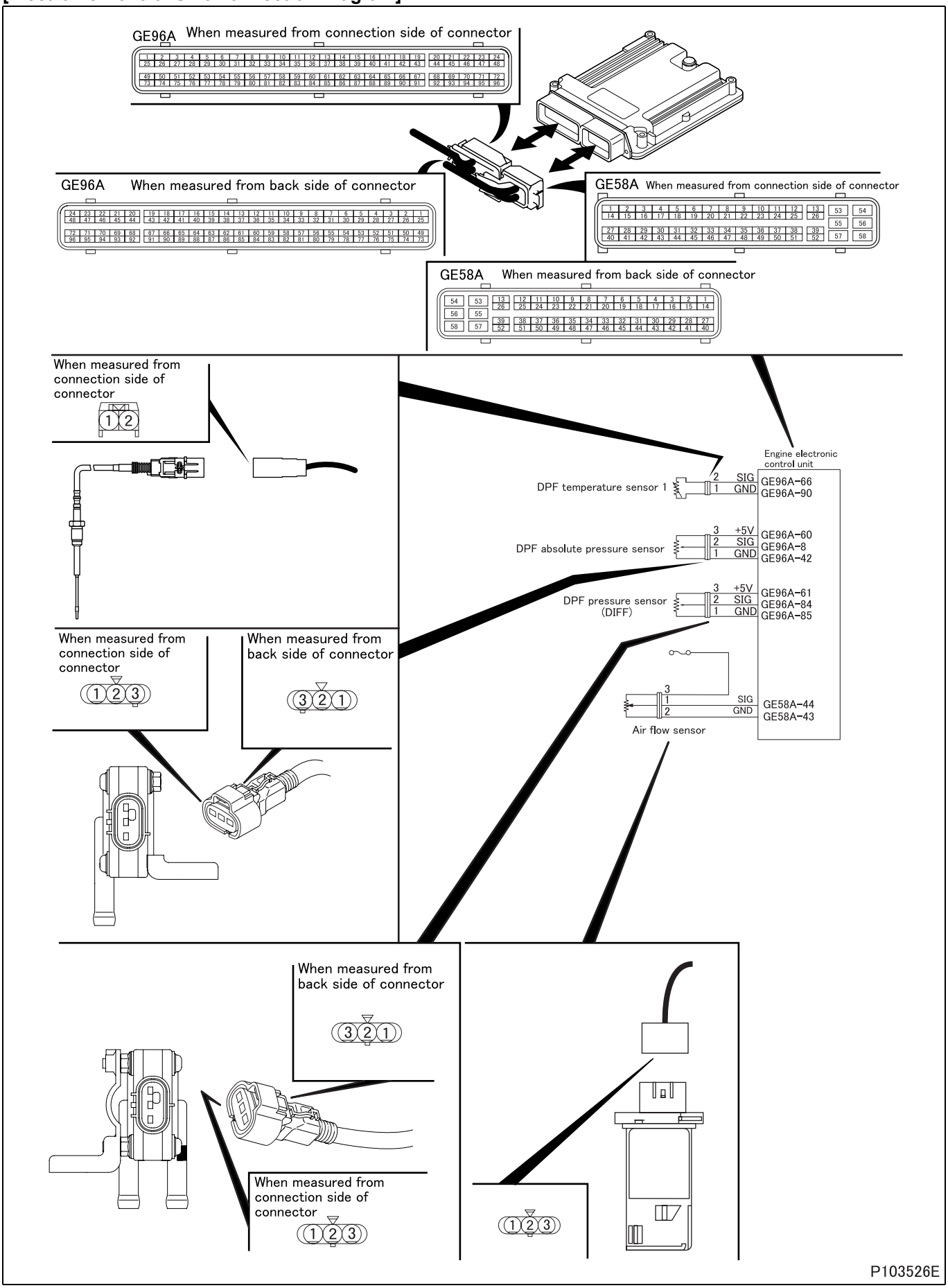

P103526E

[Parts Identification and Location]

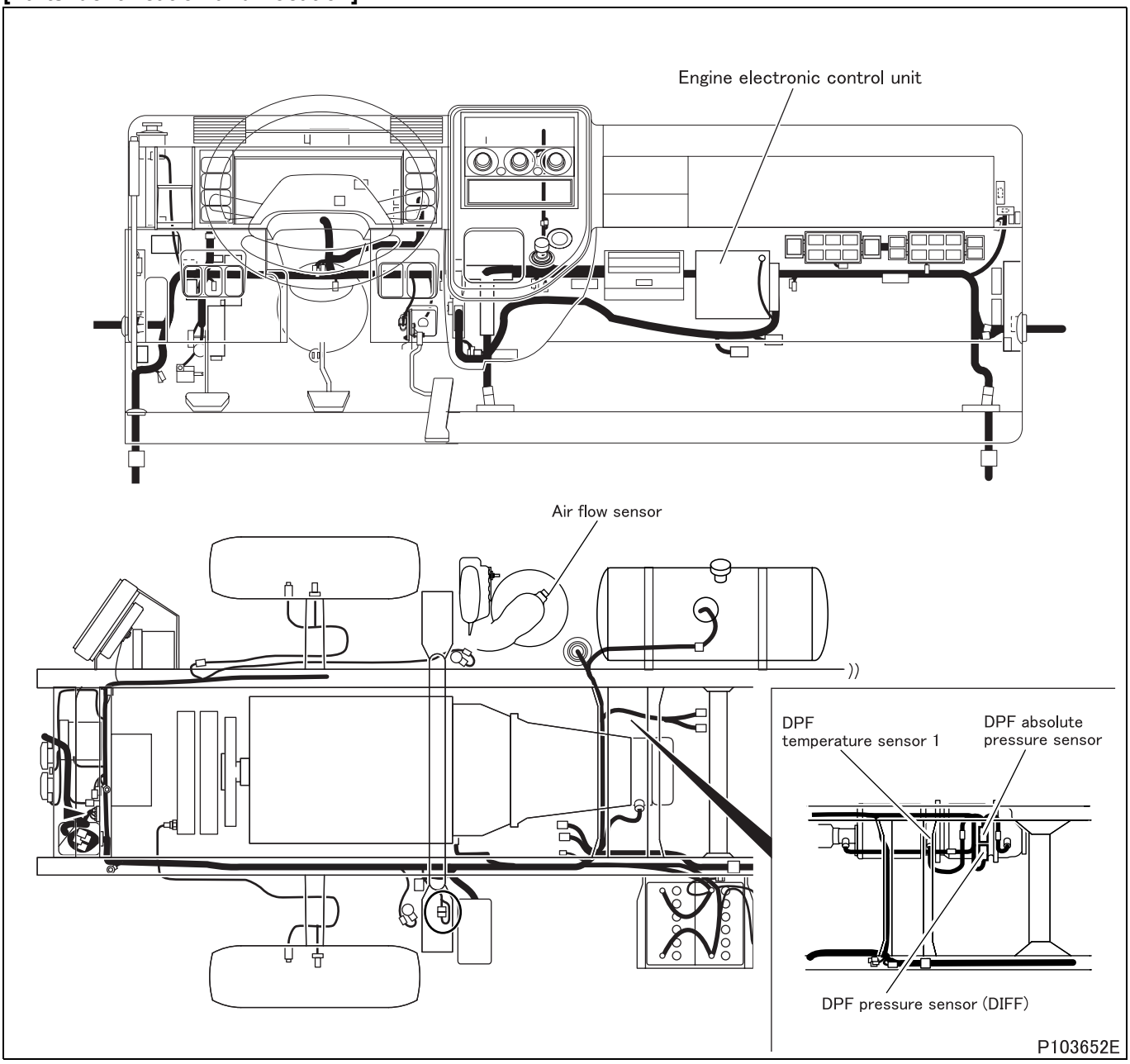

[Fault diagnosis]

- Perform checks in the sequence of the following steps.

Step 1	Inspection items		Inspection by control data
	Maintenance item		Check if following diagnosis codes occur simultaneously. • P0045 “VGT Actuator (Open)” • P0046 “VGT Actuator (Performance)” • P0047 “VGT Actuator (Low)” • P0102 “Airflow Sensor (Low)” • P0103 “Airflow Sensor (High)” • P0426 “EXH Gas Temp SNSR1 (Plausibility)” • P0427 “EXH Gas Temp SNSR1 (Low)” • P0428 “EXH Gas Temp SNSR1 (High)” • P0545 “DPF Temp SNSR (upstream) Low” • P0546 “DPF Temp SNSR (upstream) High” • P1430 “DPF Regeneration Switch” • P1660 “DPF Lamp Control Circuit (Low)” • P2031 “Exhaust Gas Temp” • P2032 “Exhaust Gas Temp (Low)” • P2033 “Exhaust Gas Temp (High)” • P2453 “DPF Diff SNSR (Plausi) & MFF” • P2454 “DPF Diff SNSR (Low) & MFF” • P2455 “DPF Diff SNSR (High) & MFF”
	Inspection condition		Ensure that each sensor mounting condition is free of abnormalities.
	Requirements		Codes occur.
	Inspection result (Is the judging standard satisfied?)	YES	Inspect diagnosis code that is occurring and go to step 2.
		NO	Go to step 2.

Step 2	Inspection items		Inspection of DPF temperature sensor 1 unit
	Maintenance item		Measure value of resistance between connector terminal No. 1 and 2.
	Inspection condition		• Put DPF temperature sensor 1 in container filled with engine oil. • Heat the oil to each of the specified temperatures. Stir the oil well while doing so.
	Requirements		• 20°C {68°F}: 241.8 kΩ • 50°C {122°F}: 106.2 $^{+74.3}_{-41.8}$ kΩ • 100°C {212°F}: 33.56 $^{+17.60}_{-10.60}$ kΩ • 150°C {302°F}: 13.90 $^{+5.36}_{-3.60}$ kΩ • 200°C {392°F}: 6.896 $^{+2.064}_{-1.252}$ kΩ
	Inspection result (Is the judging standard satisfied?)	YES	Go to step 3.
		NO	Cleaning of sensor

<Step 2 inspection diagram>

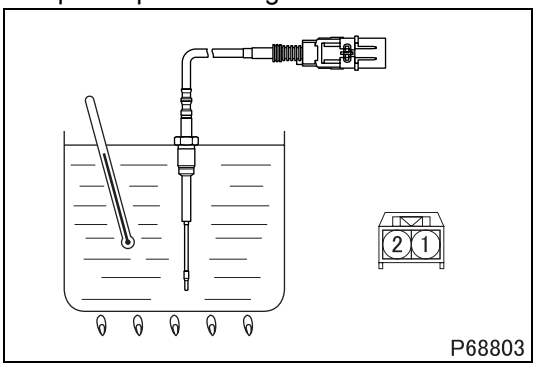

Step 3	Inspection items		Inspection of oil level
	Maintenance item		Inspection of engine oil level
	Inspection condition		Engine stopped
	Requirements		Oil level for inspection is not exceeded.
	Inspection result (Is the judging standard satisfied?)	YES	Go to step 4.
		NO	After replacement of oil, go to step 4.

<Step 3 inspection diagram>

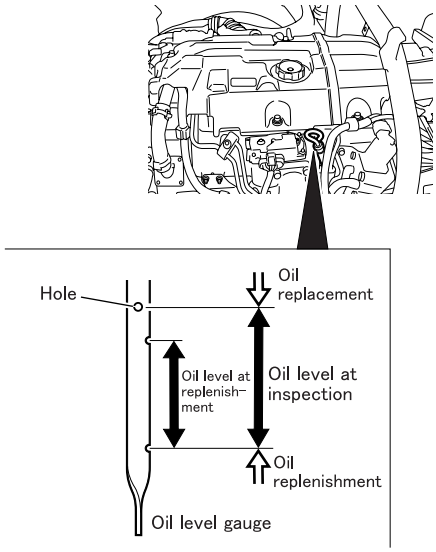

P103677E

Step 4	Inspection items		Inspection of pressure hose
	Maintenance item		Check pressure hose of DPF absolute pressure sensor and DPF pressure sensor (DIFF) for connection and cracks.
	Inspection condition		–
	Requirements		Nothing abnormal detected
	Inspection result (Is the judging standard satisfied?)	YES	Go to step 5.
		NO	After correction and replacement of hose, go to step 5.

Step 5	Inspection items		Inspection of sensor unit
	Maintenance item		Measure value of voltage between connector terminal No. 2 (+) and 1 (–).
	Inspection condition		• Apply voltage DC 5 V across terminals No. 3 (+) and 1 (–). • Gradually increase applied air pressure.
	Requirements		• 0 ± 3.5 kPa {0 ± 0.5 psi, 0 ± 0.04 kgf/cm^2}: 1 V • 100 ± 3.5 kPa {15 ± 0.5 psi, 1.02 ± 0.04 kgf/cm^2}: 4.5 V
	Inspection result (Is the judging standard satisfied?)	YES	Go to step 6.
		NO	Replacement of sensor

<Step 5 inspection diagram>

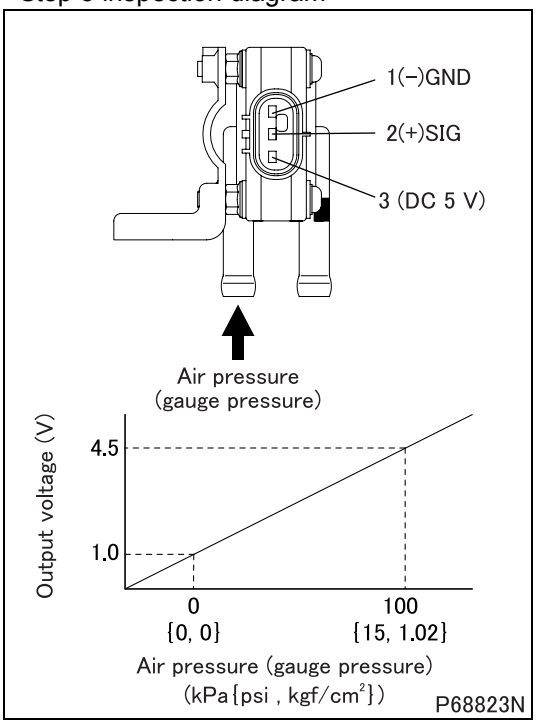

Step 6	Inspection items		Inspection of sensor unit
	Maintenance item		Since inspection of single part is not easy, whether characteristics are deteriorated or not must be checked for the sensor mounted on the current vehicle by measuring and comparing the amount of sensor intake air of the sensor currently mounted on vehicle and that replaced with new one by the service data. **(1) Prepare for inspection** • Clean or replace air cleaner element. • Prepare a new air flow sensor. • Warm up the engine fully. **(2) Measure the intake air of current sensor** • Keep pressing the accelerator pedal until it bottom the stopper bolt from the idling state. (no load maximum rotation) • Measure the following items from among “Service data”. **<General Scanning Tool used>** • Engine speed: “Ne” (rpm) • Intake air flow rate: “Air Flow Rate from MAFS” (g/s) **<Multi-Use Tester used>** • Engine speed: 01 “Engine Revolution” (rpm) • Intake air flow rate: 60 “Air mass flow” (g/s) **(3) Measure the intake air of new sensor** • Replace the currently mounted sensor with a new sensor. • Keep pressing the accelerator pedal until it bottom the stopper bolt from the idling state. (no load maximum rotation) • Measure intake air flow at the same rpm as that of engine revolution in item (2) of “Service data”. **(4) Comparison whether characteristics are deteriorated** • Calculate the characteristics deterioration factor (%) by the following equation. • Characteristics deterioration factor (%) = (intake air of new item – current intake air) × 100/intake air of new item.
	Inspection condition		–
	Requirements		10% or less.
	Inspection result (Is the judging standard satisfied?)	YES	Go to step 7.
		NO	Replacement of sensor

Step 7	Inspection items		Inspection by control data
	Maintenance item		Perform actuator test item No. B2 “Fuel Leak Check”.
	Inspection condition		Engine start: At idle
	Requirements		There is no leak from injectors (four).
	Inspection result (Is the judging standard satisfied?)	YES	Replacement of diesel particulate filter
		NO	Replacement of injector

[Fault code]
Diagnosis code: P2453/Flash code: 97
[Monitor]
Failure of DPF pressure sensor (DIFF)
[Fault (outline)]
- Dynamic check
- Offset check

[Diagnosis check]
Either of the following is monitored.
<Initial>
- Pressure output from DPF pressure sensor (DIFF) is monitored for 0 mbar {0 psi} during engine after run.

<During vehicle operation>
- Diesel particulate filter pressure calculated by engine electronic control unit is monitored for abnormality.

[Code generation condition]
Diagnosis code is generated under either of the following conditions.
<Initial>
- Pressure output from DPF pressure sensor (DIFF) exceeds 70 mbar {1.015 psi}.
  (Warning lamp (red) is lit and diagnosis code is displayed on third establishment of code generation condition.)

<During vehicle operation>
- Pressure output from DPF pressure sensor (DIFF) remains over –4 mbar {–0.058 psi} and below 3 mbar {0.043 psi} for 1 second.
  (Warning lamp (orange) is lit and diagnosis code is displayed on first establishment of code generation condition.)

[Diagnosis check timing]
- Fault diagnosis is performed only once during the driving cycle.

[Diagnostic requirement]
<Initial>
- Engine status: after-run

<During vehicle operation>
- Variation of exhaust volume-flow rate: more than 150 m^3/h/s or less than –200 m^3/h/s
- Air flow sensor: in order
- Atmospheric pressure sensor: in order
- Boost air temperature sensor: in order
- Intake air temperature sensor: in order
- DPF absolute pressure sensor: normal in output signal
- DPF pressure sensor (DIFF): normal in output signal
- DPF temperature sensor 1: in order
- Sensor 5 V power supply: in order
- Battery voltage: in order
- MPROP (rail pressure control valve): in order
- Diesel particulate filter regeneration control: in order

[Control effected by electronic control unit during fault]
- Diesel particulate filter regeneration is stopped.
- Particulate matter deposit computation is stopped.
- Related fault check is stopped.

[Probable cause of trouble]
- Open-circuit or short-circuit of harness between electronic control unit and sensor
- Malfunction of each connector
- Malfunction of sensor
- Malfunction of electronic control unit
- Dissolution, blockage, and damage of diesel particulate filter

[Recoverability]

- Recovered if signal becomes normal when starter switch is turned OFF to ON (power supply resumed to electronic control unit).
  (Timing of warning lamp/diagnosis code OFF depends on condition.)

<Initial>

- Lamp is extinguished and code is cleared at fourth diagnosis code display after recovery.

<During vehicle operation>

- Lamp is extinguished and code is cleared simultaneously with recovery.

[Electronic Control Unit Connection Diagram]

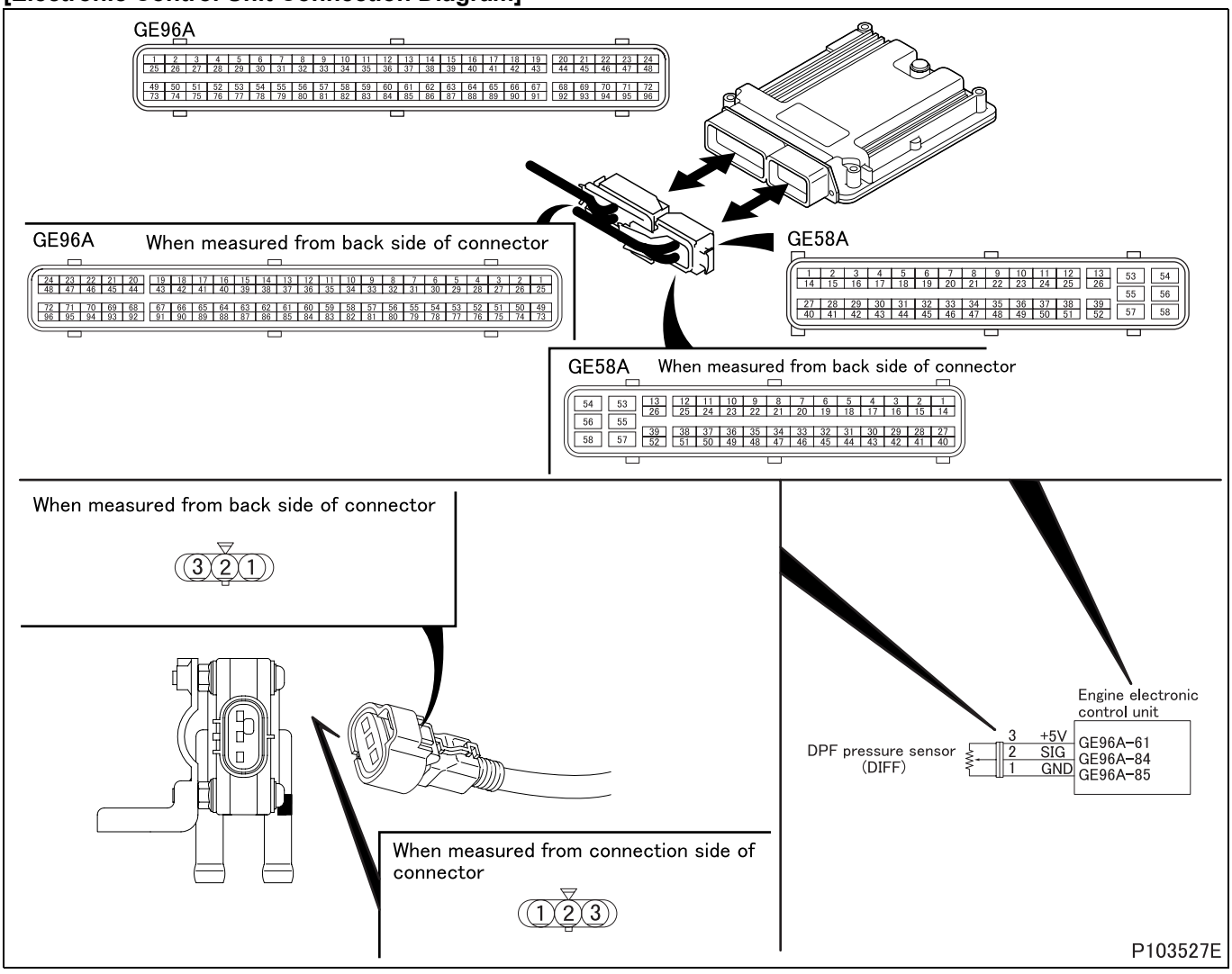

[Parts Identification and Location]

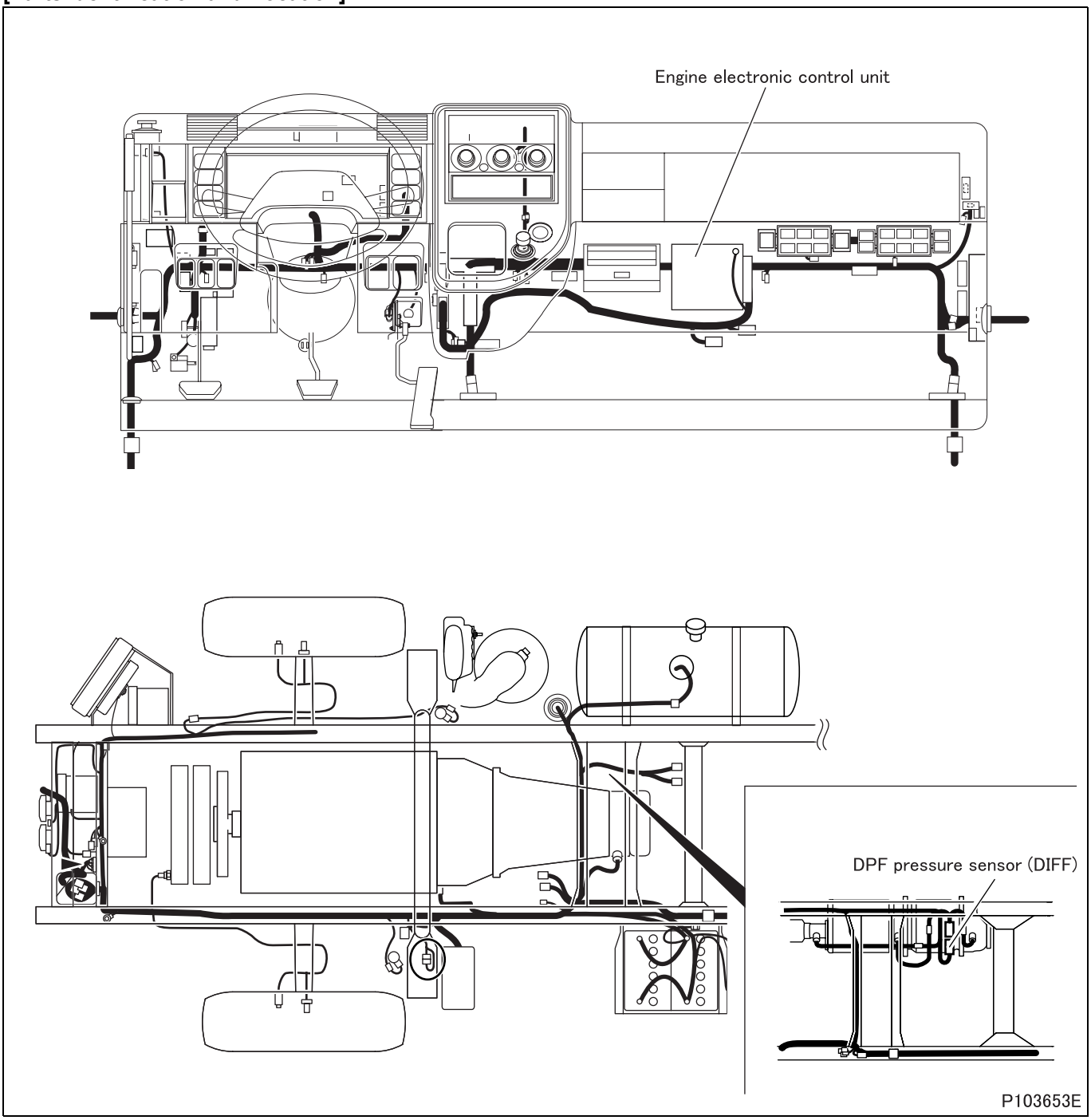

[Fault diagnosis]

- Perform checks in the sequence of the following steps.

Step 1	Inspection items		Inspection by control data
	Maintenance item		Measurement of item No. 22 “Difference pressure across DPF” of Service Data.
	Inspection condition		Past failures include diesel particulate filter pressure sensor, while the current failures do not include diesel particulate filter pressure sensor.
	Requirements		When engine is stationary: 0 kPa {0 psi, 0 kgf/cm^2}
	Inspection result (Is the judging standard satisfied?)	YES	Go to transient fault (See Gr00.).
		NO	Go to step 2.

Step 2	Inspection items		Inspection by electronic control unit connector (signal)
	Maintenance item		Measure value of voltage between connector (GE96A) terminal No. 84 (+) and 85 (–).
	Inspection condition		• Measure from back side of harness connector with each device connected to harness. • Starter switch: ON
	Requirements		1 to 4.5 V
	Inspection result (Is the judging standard satisfied?)	YES	Go to step 5.
		NO	Go to step 3.

Step 3	Inspection items		Inspection by electronic control unit connector (power supply)
	Maintenance item		Measure value of voltage between connector (GE96A) terminal No. 61 (+) and 85 (–).
	Inspection condition		• Measure from back side of harness connector with each device connected to harness. • Starter switch: ON
	Requirements		5 V
	Inspection result (Is the judging standard satisfied?)	YES	Go to step 4.
		NO	Go to step 5.

Step 4	Inspection items		Inspection by electronic control unit connector (ground)
	Maintenance item		Measure value of voltage between connector (GE96A) terminal No. 85 (+) and (GE58A) terminal No. 53 (–).
	Inspection condition		• Measure from back side of harness connector with each device connected to harness. • Starter switch: ON
	Requirements		0 V
	Inspection result (Is the judging standard satisfied?)	YES	Go to step 6.
		NO	Go to step 5.

Step 5	Inspection items		Inspection of electronic control unit connector
	Maintenance item		Inspection of connector
	Inspection condition		–
	Requirements		• Connector is properly connected. • No trace of water entry is found. • No corrosion is found in terminal. • Connection to terminal is appropriate.
	Inspection result (Is the judging standard satisfied?)	YES	Go to step 12.
		NO	Modify connector.

Step 6	Inspection items		Inspection of sensor connector
	Maintenance item		Inspection of connector
	Inspection condition		–
	Requirements		• Connector is properly connected. • No trace of water entry is found. • No corrosion is found in terminal. • Connection to terminal is appropriate.
	Inspection result (Is the judging standard satisfied?)	YES	Go to step 7.
		NO	Modify connector.

Step 7	Inspection items		Inspection of sensor unit
	Maintenance item		Measure value of voltage between connector terminal No. 2 (+) and 1 (–).
	Inspection condition		• Apply voltage DC 5 V across terminals No. 3 (+) and 1 (–). • Gradually increase applied air pressure.
	Requirements		• 0 ± 3.5 kPa {0 ± 0.5 psi, 0 ± 0.04 kgf/cm^2}: 1 V • 100 ± 3.5 kPa {15 ± 0.5 psi, 1.02 ± 0.04 kgf/cm^2}: 4.5 V
	Inspection result (Is the judging standard satisfied?)	YES	Go to step 8.
		NO	Replacement of sensor

<Step 7 inspection diagram>

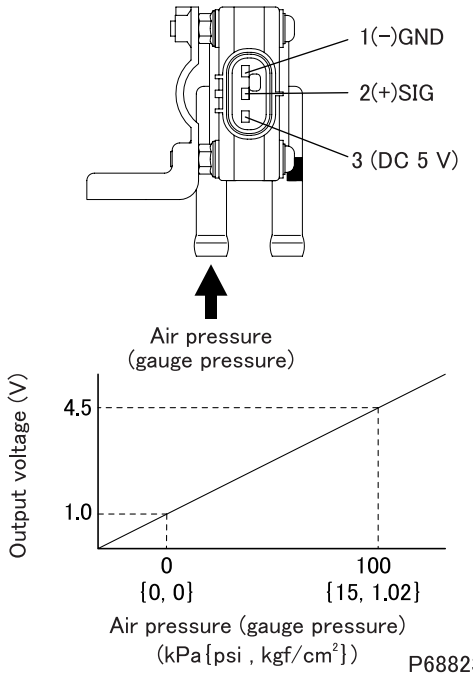

Step 8	Inspection items		Inspection of harness between electronic control unit and sensor (power supply)
	Maintenance item		Measure value of voltage between connector terminal No. 3 (+) and 1 (–).
	Inspection condition		• Measure from back side of harness connector with each device connected to harness. • Starter switch: ON
	Requirements		5 V
	Inspection result (Is the judging standard satisfied?)	YES	Go to step 10.
		NO	Go to step 9.

Step 9	Inspection items		Inspection of harness between electronic control unit and sensor (power supply)
	Maintenance item		Check circuit between sensor connector terminal No. 3 and electronic control unit connector (GE96A) terminal No. 61.
	Inspection condition		Disconnect each device from harness and measure from connection side of harness connector.
	Requirements		There is continuity.
	Inspection result (Is the judging standard satisfied?)	YES	Go to step 12.
		NO	Modify harness.

Step 10	Inspection items		Inspection of harness between electronic control unit and sensor (ground)
	Maintenance item		Check circuit between sensor connector terminal No. 1 and electronic control unit connector (GE96A) terminal No. 85.
	Inspection condition		Disconnect each device from harness and measure from connection side of harness connector.
	Requirements		There is continuity.
	Inspection result (Is the judging standard satisfied?)	YES	Go to step 11.
		NO	Modify harness.

Step 11	Inspection items		Inspection of harness between electronic control unit and sensor (signal)
	Maintenance item		Check circuit between sensor connector terminal No. 2 and electronic control unit connector (GE96A) terminal No. 84.
	Inspection condition		Disconnect each device from harness and measure from connection side of harness connector.
	Requirements		There is continuity.
	Inspection result (Is the judging standard satisfied?)	YES	Go to step 12.
		NO	Modify harness.

Step 12	Inspection items		Inspection by control data
	Maintenance item		Measurement of item No. 22 “Difference pressure across DPF”
	Inspection condition		Past failures include diesel particulate filter pressure sensor, while the current failures do not include diesel particulate filter pressure sensor.
	Requirements		When engine is stationary: 0 kPa {0 psi, 0 kgf/cm^2}
	Inspection result (Is the judging standard satisfied?)	YES	Go to transient fault (See Gr00.).
		NO	Replacement of electronic control unit

[Fault code]
Diagnosis code: P2454/Flash code: 97
[Monitor]
Failure of DPF pressure sensor (DIFF)
[Fault (outline)]
Low signal range check
[Diagnosis check]
- Output voltage of DPF pressure sensor (DIFF) is monitored.

[Code generation condition]
- Pressure output from DPF pressure sensor (DIFF) remains below –179 hpa for 1 second.
  (Warning lamp is lit and diagnosis code is displayed on third establishment of code generation condition.)

[Diagnosis check timing]
- Fault diagnosis is continuously performed during the driving cycle.

[Diagnostic requirement]
–

[Control effected by electronic control unit during fault]
- Diesel particulate filter differential pressure is fixed at backup value.
- Particulate matter deposit computation is stopped.
- Related fault check is stopped.

[Probable cause of trouble]
- Open-circuit or short-circuit of harness between electronic control unit and sensor
- Malfunction of each connector
- Malfunction of sensor
- Malfunction of electronic control unit

[Recoverability]
- Recovered if signal becomes normal when starter switch is turned OFF to ON (power supply resumed to electronic control unit).
  (Warning lamp is extinguished and diagnosis code is cleared at fourth display of diagnosis code after recovery.)

[Electronic Control Unit Connection Diagram]

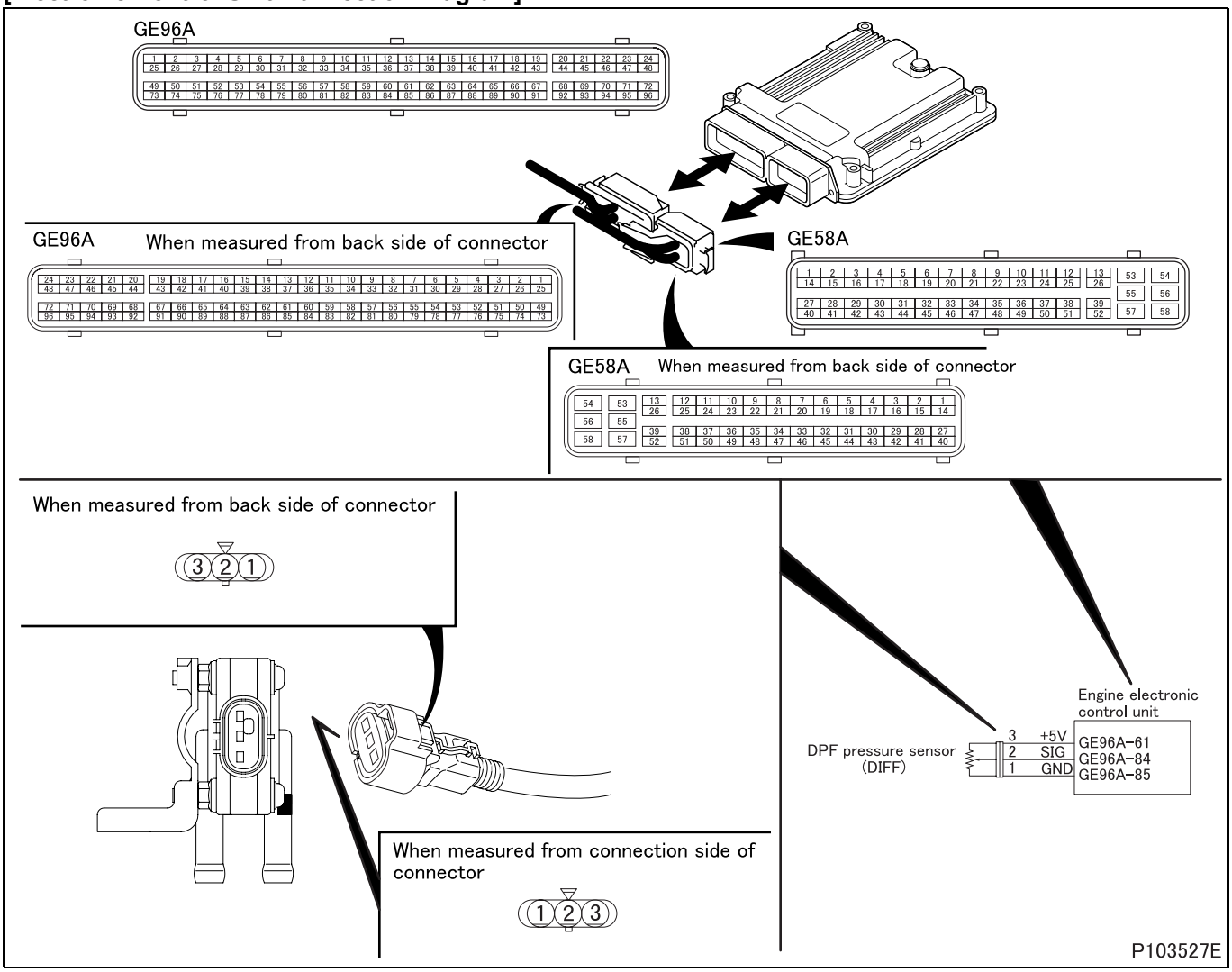

[Parts Identification and Location]

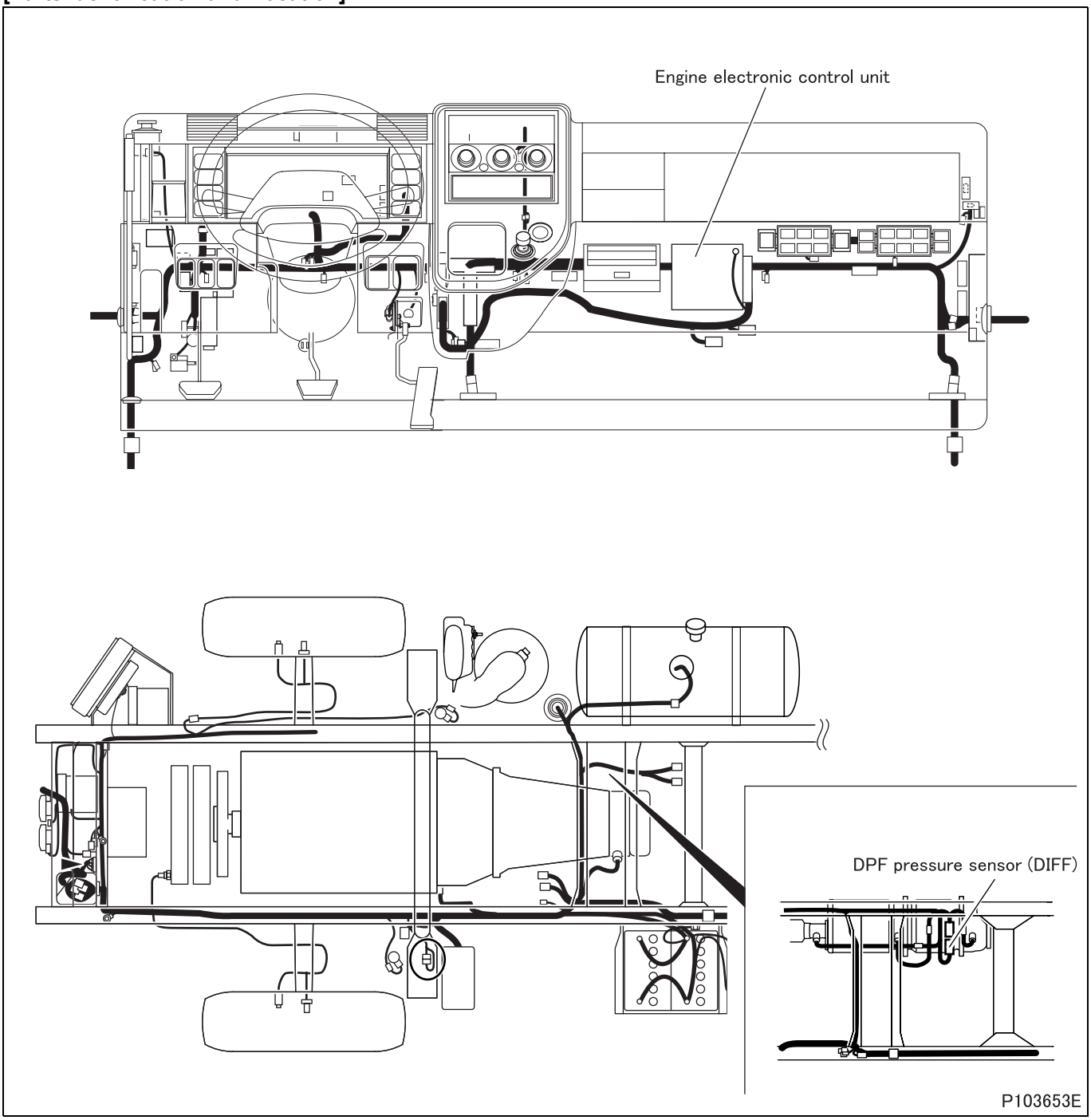

[Fault diagnosis]

- Perform checks in the sequence of the following steps.

Step 1	Inspection items		Inspection by control data
	Maintenance item		Measurement of item No. 22 “Difference pressure across DPF” of Service Data.
	Inspection condition		Past failures include diesel particulate filter pressure sensor, while the current failures do not include diesel particulate filter pressure sensor.
	Requirements		When engine is stationary: 0 kPa {0 psi, 0 kgf/cm^2}
	Inspection result (Is the judging standard satisfied?)	YES	Go to transient fault (See Gr00.).
		NO	Go to step 2.

Step 2	Inspection items		Inspection by electronic control unit connector (signal)
	Maintenance item		Measure value of voltage between connector (GE96A) terminal No. 84 (+) and 85 (–).
	Inspection condition		• Measure from back side of harness connector with each device connected to harness. • Starter switch: ON
	Requirements		1 to 4.5 V
	Inspection result (Is the judging standard satisfied?)	YES	Go to step 5.
		NO	Go to step 3.

Step 3	Inspection items		Inspection by electronic control unit connector (power supply)
	Maintenance item		Measure value of voltage between connector (GE96A) terminal No. 61 (+) and 85 (–).
	Inspection condition		• Measure from back side of harness connector with each device connected to harness. • Starter switch: ON
	Requirements		5 V
	Inspection result (Is the judging standard satisfied?)	YES	Go to step 4.
		NO	Go to step 5.

Step 4	Inspection items		Inspection by electronic control unit connector (ground)
	Maintenance item		Measure value of voltage between connector (GE96A) terminal No. 85 (+) and (GE58A) terminal No. 53 (–).
	Inspection condition		• Measure from back side of harness connector with each device connected to harness. • Starter switch: ON
	Requirements		0 V
	Inspection result (Is the judging standard satisfied?)	YES	Go to step 6.
		NO	Go to step 5.

Step 5	Inspection items		Inspection of electronic control unit connector
	Maintenance item		Inspection of connector
	Inspection condition		–
	Requirements		• Connector is properly connected. • No trace of water entry is found. • No corrosion is found in terminal. • Connection to terminal is appropriate.
	Inspection result (Is the judging standard satisfied?)	YES	Go to step 12.
		NO	Modify connector.

Step 6	Inspection items		Inspection of sensor connector
	Maintenance item		Inspection of connector
	Inspection condition		–
	Requirements		• Connector is properly connected. • No trace of water entry is found. • No corrosion is found in terminal. • Connection to terminal is appropriate.
	Inspection result (Is the judging standard satisfied?)	YES	Go to step 7.
		NO	Modify connector.

Step 7	Inspection items		Inspection of sensor unit
	Maintenance item		Measure value of voltage between connector terminal No. 2 (+) and 1 (–).
	Inspection condition		• Apply voltage DC 5 V across terminals No. 3 (+) and 1 (–). • Gradually increase applied air pressure.
	Requirements		• 0 ± 3.5 kPa {0 ± 0.5 psi, 0 ± 0.04 kgf/cm^2}: 1 V • 100 ± 3.5 kPa {15 ± 0.5 psi, 1.02 ± 0.04 kgf/cm^2}: 4.5 V
	Inspection result (Is the judging standard satisfied?)	YES	Go to step 8.
		NO	Replacement of sensor

<Step 7 inspection diagram>

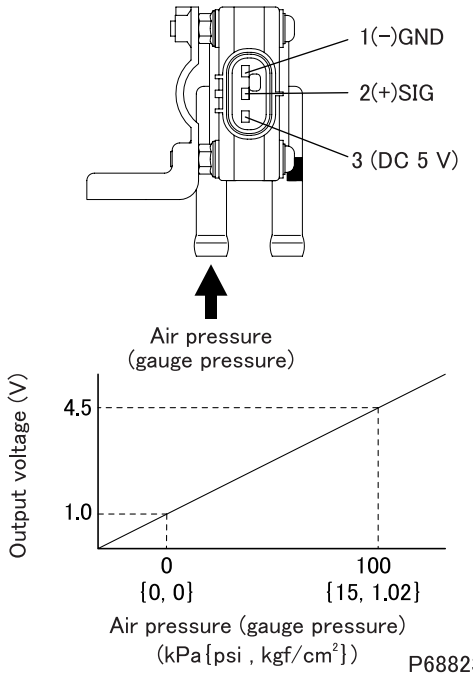

Step 8	Inspection items		Inspection of harness between electronic control unit and sensor (power supply)
	Maintenance item		Measure value of voltage between connector terminal No. 3 (+) and 1 (–).
	Inspection condition		• Measure from back side of harness connector with each device connected to harness. • Starter switch: ON
	Requirements		5 V
	Inspection result (Is the judging standard satisfied?)	YES	Go to step 10.
		NO	Go to step 9.

Step 9	Inspection items		Inspection of harness between electronic control unit and sensor (power supply)
	Maintenance item		Check circuit between sensor connector terminal No. 3 and electronic control unit connector (GE96A) terminal No. 61.
	Inspection condition		Disconnect each device from harness and measure from connection side of harness connector.
	Requirements		There is continuity.
	Inspection result (Is the judging standard satisfied?)	YES	Go to step 12.
		NO	Modify harness.

Step 10	Inspection items		Inspection of harness between electronic control unit and sensor (ground)
	Maintenance item		Check circuit between sensor connector terminal No. 1 and electronic control unit connector (GE96A) terminal No. 85.
	Inspection condition		Disconnect each device from harness and measure from connection side of harness connector.
	Requirements		There is continuity.
	Inspection result (Is the judging standard satisfied?)	YES	Go to step 11.
		NO	Modify harness.

Step 11	Inspection items		Inspection of harness between electronic control unit and sensor (signal)
	Maintenance item		Check circuit between sensor connector terminal No. 2 and electronic control unit connector (GE96A) terminal No. 84.
	Inspection condition		Disconnect each device from harness and measure from connection side of harness connector.
	Requirements		There is continuity.
	Inspection result (Is the judging standard satisfied?)	YES	Go to step 12.
		NO	Modify harness.

Step 12	Inspection items		Inspection by control data
	Maintenance item		Measurement of item No. 22 “Difference pressure across DPF”
	Inspection condition		Past failures include diesel particulate filter pressure sensor, while the current failures do not include diesel particulate filter pressure sensor.
	Requirements		When engine is stationary: 0 kPa {0 psi, 0 kgf/cm^2}
	Inspection result (Is the judging standard satisfied?)	YES	Go to transient fault (See Gr00.).
		NO	Replacement of electronic control unit

[Fault code]
Diagnosis code: P2455/Flash code: 97
[Monitor]
Failure of DPF pressure sensor (DIFF)
[Fault (outline)]
High signal range check
[Diagnosis check]
- Output voltage of DPF pressure sensor (DIFF) is monitored.

[Code generation condition]
- Pressure output from DPF pressure sensor (DIFF) remains below 1108 hpa for 1 second.
  (Warning lamp is lit and diagnosis code is displayed on third establishment of code generation condition.)

[Diagnosis check timing]
- Fault diagnosis is continuously performed during the driving cycle.

[Diagnostic requirement]
–

[Control effected by electronic control unit during fault]
- Diesel particulate filter differential pressure is fixed at backup value.
- Particulate matter deposit computation is stopped.
- Related fault check is stopped.

[Probable cause of trouble]
- Open-circuit or short-circuit of harness between electronic control unit and sensor
- Malfunction of each connector
- Malfunction of sensor
- Malfunction of electronic control unit

[Recoverability]
- Recovered if signal becomes normal when starter switch is turned OFF to ON (power supply resumed to electronic control unit).
  (Warning lamp is extinguished and diagnosis code is cleared at fourth display of diagnosis code after recovery.)

[Electronic Control Unit Connection Diagram]

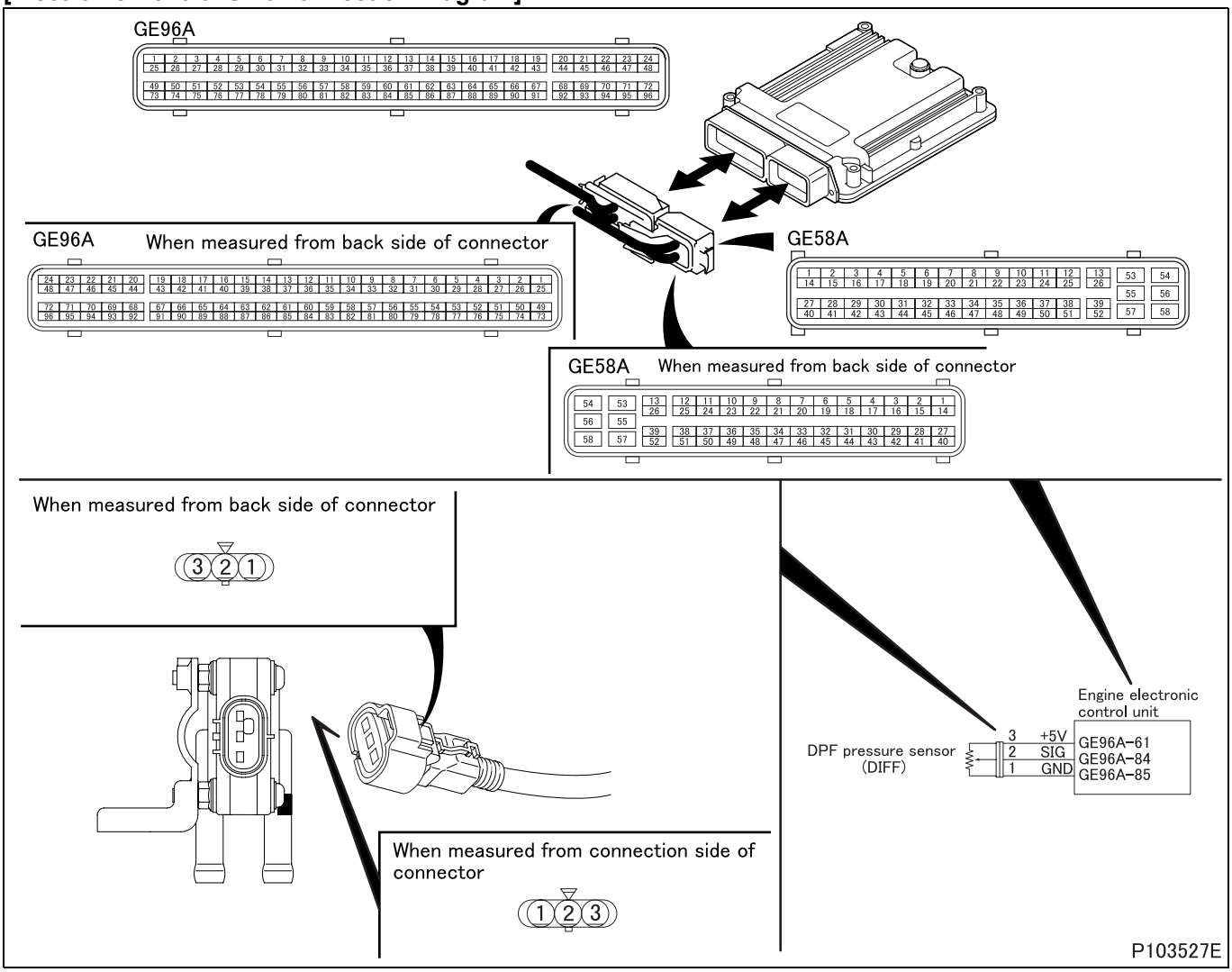

[Parts Identification and Location]

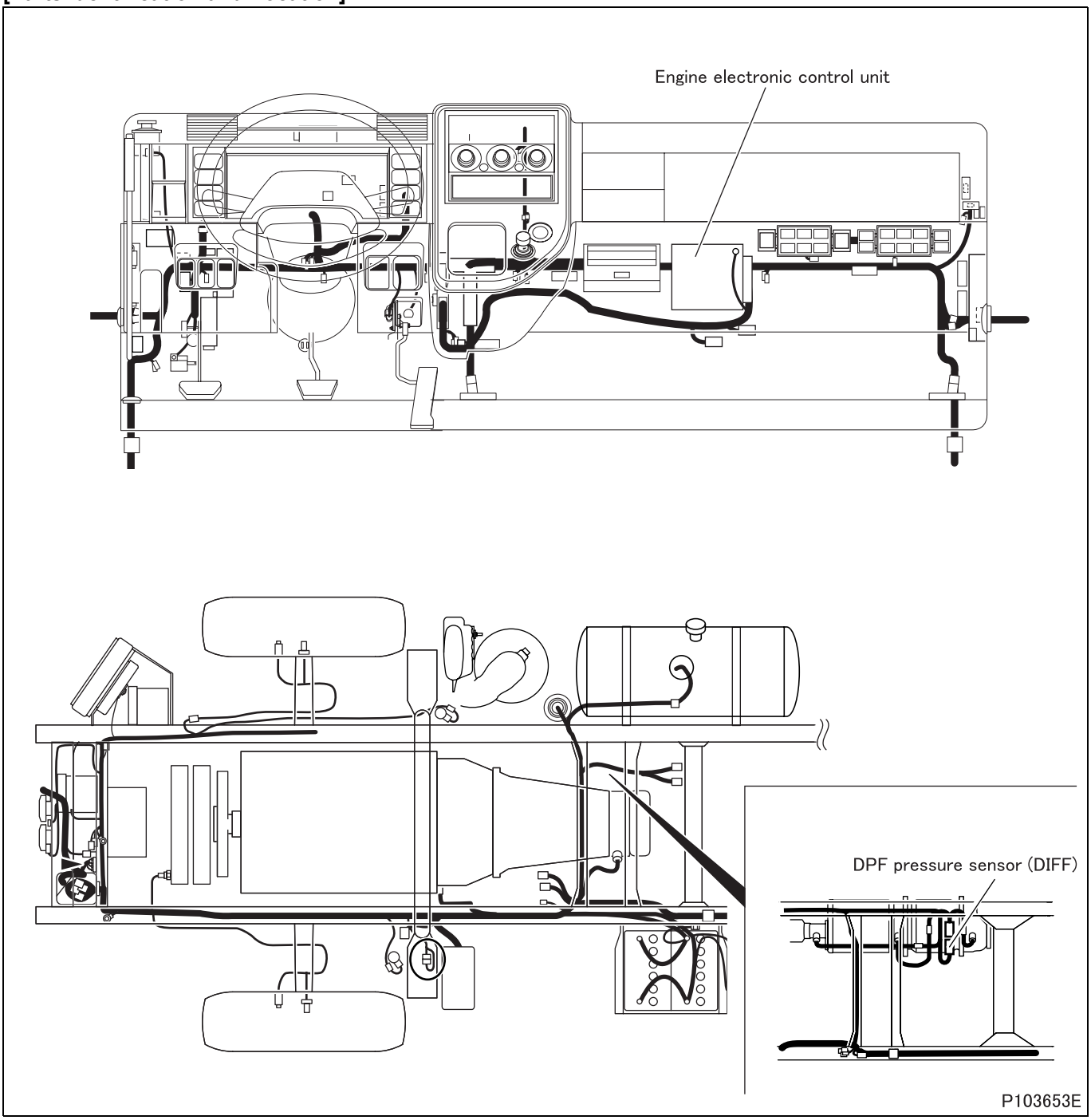

[Fault diagnosis]

- Perform checks in the sequence of the following steps.

Step 1	Inspection items		Inspection by control data
	Maintenance item		Measurement of item No. 22 “Difference pressure across DPF” of Service Data.
	Inspection condition		Past failures include diesel particulate filter pressure sensor, while the current failures do not include diesel particulate filter pressure sensor.
	Requirements		When engine is stationary: 0 kPa {0 psi, 0 kgf/cm^2}
	Inspection result (Is the judging standard satisfied?)	YES	Go to transient fault (See Gr00.).
		NO	Go to step 2.

Step 2	Inspection items		Inspection by electronic control unit connector (signal)
	Maintenance item		Measure value of voltage between connector (GE96A) terminal No. 84 (+) and 85 (–).
	Inspection condition		• Measure from back side of harness connector with each device connected to harness. • Starter switch: ON
	Requirements		1 to 4.5 V
	Inspection result (Is the judging standard satisfied?)	YES	Go to step 5.
		NO	Go to step 3.

Step 3	Inspection items		Inspection by electronic control unit connector (power supply)
	Maintenance item		Measure value of voltage between connector (GE96A) terminal No. 61 (+) and 85 (–).
	Inspection condition		• Measure from back side of harness connector with each device connected to harness. • Starter switch: ON
	Requirements		5 V
	Inspection result (Is the judging standard satisfied?)	YES	Go to step 4.
		NO	Go to step 5.

Step 4	Inspection items		Inspection by electronic control unit connector (ground)
	Maintenance item		Measure value of voltage between connector (GE96A) terminal No. 85 (+) and (GE58A) terminal No. 53 (–).
	Inspection condition		• Measure from back side of harness connector with each device connected to harness. • Starter switch: ON
	Requirements		0 V
	Inspection result (Is the judging standard satisfied?)	YES	Go to step 6.
		NO	Go to step 5.

Step 5	Inspection items		Inspection of electronic control unit connector
	Maintenance item		Inspection of connector
	Inspection condition		–
	Requirements		• Connector is properly connected. • No trace of water entry is found. • No corrosion is found in terminal. • Connection to terminal is appropriate.
	Inspection result (Is the judging standard satisfied?)	YES	Go to step 12.
		NO	Modify connector.

Step 6	Inspection items		Inspection of sensor connector
	Maintenance item		Inspection of connector
	Inspection condition		–
	Requirements		• Connector is properly connected. • No trace of water entry is found. • No corrosion is found in terminal. • Connection to terminal is appropriate.
	Inspection result (Is the judging standard satisfied?)	YES	Go to step 7.
		NO	Modify connector.

Step 7	Inspection items		Inspection of sensor unit
	Maintenance item		Measure value of voltage between connector terminal No. 2 (+) and 1 (–).
	Inspection condition		• Apply voltage DC 5 V across terminals No. 3 (+) and 1 (–). • Gradually increase applied air pressure.
	Requirements		• 0 ± 3.5 kPa {0 ± 0.5 psi, 0 ± 0.04 kgf/cm^2}: 1 V • 100 ± 3.5 kPa {15 ± 0.5 psi, 1.02 ± 0.04 kgf/cm^2}: 4.5 V
	Inspection result (Is the judging standard satisfied?)	YES	Go to step 8.
		NO	Replacement of sensor

<Step 7 inspection diagram>

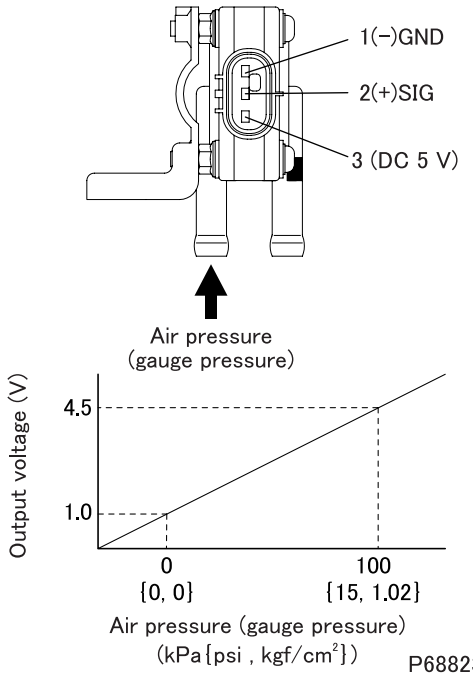

Step 8	Inspection items		Inspection of harness between electronic control unit and sensor (power supply)
	Maintenance item		Measure value of voltage between connector terminal No. 3 (+) and 1 (–).
	Inspection condition		• Measure from back side of harness connector with each device connected to harness. • Starter switch: ON
	Requirements		5 V
	Inspection result (Is the judging standard satisfied?)	YES	Go to step 10.
		NO	Go to step 9.

Step 9	Inspection items		Inspection of harness between electronic control unit and sensor (power supply)
	Maintenance item		Check circuit between sensor connector terminal No. 3 and electronic control unit connector (GE96A) terminal No. 61.
	Inspection condition		Disconnect each device from harness and measure from connection side of harness connector.
	Requirements		There is continuity.
	Inspection result (Is the judging standard satisfied?)	YES	Go to step 12.
		NO	Modify harness.

Step 10	Inspection items		Inspection of harness between electronic control unit and sensor (ground)
	Maintenance item		Check circuit between sensor connector terminal No. 1 and electronic control unit connector (GE96A) terminal No. 85.
	Inspection condition		Disconnect each device from harness and measure from connection side of harness connector.
	Requirements		There is continuity.
	Inspection result (Is the judging standard satisfied?)	YES	Go to step 11.
		NO	Modify harness.

Step 11	Inspection items		Inspection of harness between electronic control unit and sensor (signal)
	Maintenance item		Check circuit between sensor connector terminal No. 2 and electronic control unit connector (GE96A) terminal No. 84.
	Inspection condition		Disconnect each device from harness and measure from connection side of harness connector.
	Requirements		There is continuity.
	Inspection result (Is the judging standard satisfied?)	YES	Go to step 12.
		NO	Modify harness.

Step 12	Inspection items		Inspection by control data
	Maintenance item		Measurement of item No. 22 “Difference pressure across DPF”
	Inspection condition		Past failures include diesel particulate filter pressure sensor, while the current failures do not include diesel particulate filter pressure sensor.
	Requirements		When engine is stationary: 0 kPa {0 psi, 0 kgf/cm^2}
	Inspection result (Is the judging standard satisfied?)	YES	Go to transient fault (See Gr00.).
		NO	Replacement of electronic control unit

[Fault code]
Diagnosis code: P2457/Flash code: 2
[Monitor]
Failure of exhaust gas recirculation cooler
[Fault (outline)]
Exhaust gas recirculation cooler failure
[Diagnosis check]
Cooling performance of exhaust gas recirculation cooler is monitored, with exhaust gas recirculation system temperature detected through boost air temperature sensor under the following conditions and compared with target temperature for control by engine electronic control unit.
- Engine: started
- Exhaust brake: OFF

[Code generation condition]
- Temperature output from boost air temperature sensor remains over maximum target temperature for 10 seconds. (Warning lamp is lit and diagnosis code is displayed on third establishment of code generation condition.)

[Diagnosis check timing]
- Fault diagnosis is performed only once during the driving cycle.

[Diagnostic requirement]
- Engine speed: 500 to 2700 rpm
- Variation in engine speed: less than 300 rpm/s
- Exhaust shutter: open
- Time till above conditions were met: more than 15 seconds

<Conditions after above conditions are met>
- Water temperature: below 95°C {203°F}
- Exhaust gas recirculation cooler temperature: –7 to 60°C {19 to 140°F}
- Engine running time: more than 60 seconds
- Exhaust gas recirculation valve: in order
- Intake throttle: in order
- Turbocharger actuator: in order
- Controller area network communication of each electronic drive unit (exhaust gas recirculation, intake throttle and turbocharger): in order
- Exhaust gas recirculation flow rate and exhaust gas recirculation valve operation: in order
- Atmospheric pressure sensor: in order
- Boost pressure sensor: in order
- Water temperature sensor: in order
- Boost air temperature sensor: in order
- Sensor 5 V power supply: in order
- Battery voltage: in order
- MPROP (rail pressure control valve): in order
- Injector: in order
- Intercooler: in order
- Starter switch circuit: in order

[Control effected by electronic control unit during fault]
- Exhaust gas recirculation control is stopped.
- Throttle controls disabled
- Diesel particulate filter regeneration is stopped.
- Related fault check is stopped.

[Probable cause of trouble]
- Malfunction of exhaust gas recirculation cooler (breakage, clogging)
- Malfunction of exhaust gas recirculation pipe and hose (breakage, clogging)

[Recoverability]

- Recovered if signal becomes normal when starter switch is turned OFF to ON (power supply resumed to electronic control unit).
  (Warning lamp is extinguished and diagnosis code is cleared at fourth display of diagnosis code after recovery.)

[Fault diagnosis]

- Perform checks in the sequence of the following steps.

Step 1	Inspection items		Inspection by control data
	Maintenance item		Check if following diagnosis codes occur simultaneously. • P0403 “EGR1 (Actuator Circuit)” • P0409 “EGR1 (Position Sensor)” • P0562 “Power Supply Voltage (Low)” • P0563 “Power Supply Voltage (High)” • P0600 “CAN Communication” • P0607 “ECU System” • P060B “A/D Converter” • P061B “ECU Performance (Calc)” • P061C “ECU Performance (Ne)” • P0685 “EDU Relay (Open)” • P0686 “EDU Relay (Low)” • P0687 “EDU Relay (High)” • P2413 “EGR System”
	Inspection condition		• Starter switch: ON • Do not start engine
	Requirements		Codes occur.
	Inspection result (Is the judging standard satisfied?)	YES	Inspect diagnosis code that is occurring.
		NO	Inspection of exhaust gas recirculation system (exhaust gas recirculation pipe, exhaust gas recirculation cooler, exhaust gas recirculation valve)

[Fault code]
Diagnosis code: P2459/Flash code: 92
[Monitor]
Frequent diesel particulate filter regeneration
[Fault (outline)]
Excessive diesel particulate filter regeneration frequency (diesel particulate filter clogged up)
[Diagnosis check]
- Diesel particulate filter is monitored for early clogging through measurement of traveled time and distance from last diesel particulate filter regeneration.

[Code generation condition]
- If regenerative control was effected 2 consecutive times within 90 minutes in traveled time and 80 km {49.7 miles} in traveled distance.
  (Warning lamp is lit and diagnosis code is displayed on first establishment of code generation condition.)

[Diagnosis check timing]
- Fault diagnosis is performed each time when the diesel particulate filter regeneration control is activated.

[Diagnostic requirement]
- Diesel particulate filter regeneration control: active

[Control effected by electronic control unit during fault]
- Engine torque is limited.
- Auto cruise control stopped
- Traction control is stopped. <Automatic transmission>
- Diesel particulate filter regeneration is stopped.
- Related fault check is stopped.

[Probable cause of trouble]
- Failure of diesel particulate filter indicator lamp
- Failure of diesel particulate filter cleaning switch
- Manual diesel particulate filter regeneration is not performed.
- Excessive smoke emission (due to malfunction of engine proper, common rail or exhaust gas recirculation system)
- Malfunction of air flow sensor
- Malfunction of DPF absolute pressure sensor and DPF pressure sensor (DIFF)
- Malfunction of diesel particulate filter

[Recoverability]
- Recovered if signal becomes normal when starter switch is turned OFF to ON (power supply resumed to electronic control unit).
  (Warning lamp is extinguished and diagnosis code is cleared at fourth display of diagnosis code after recovery.)

[Electronic Control Unit Connection Diagram]

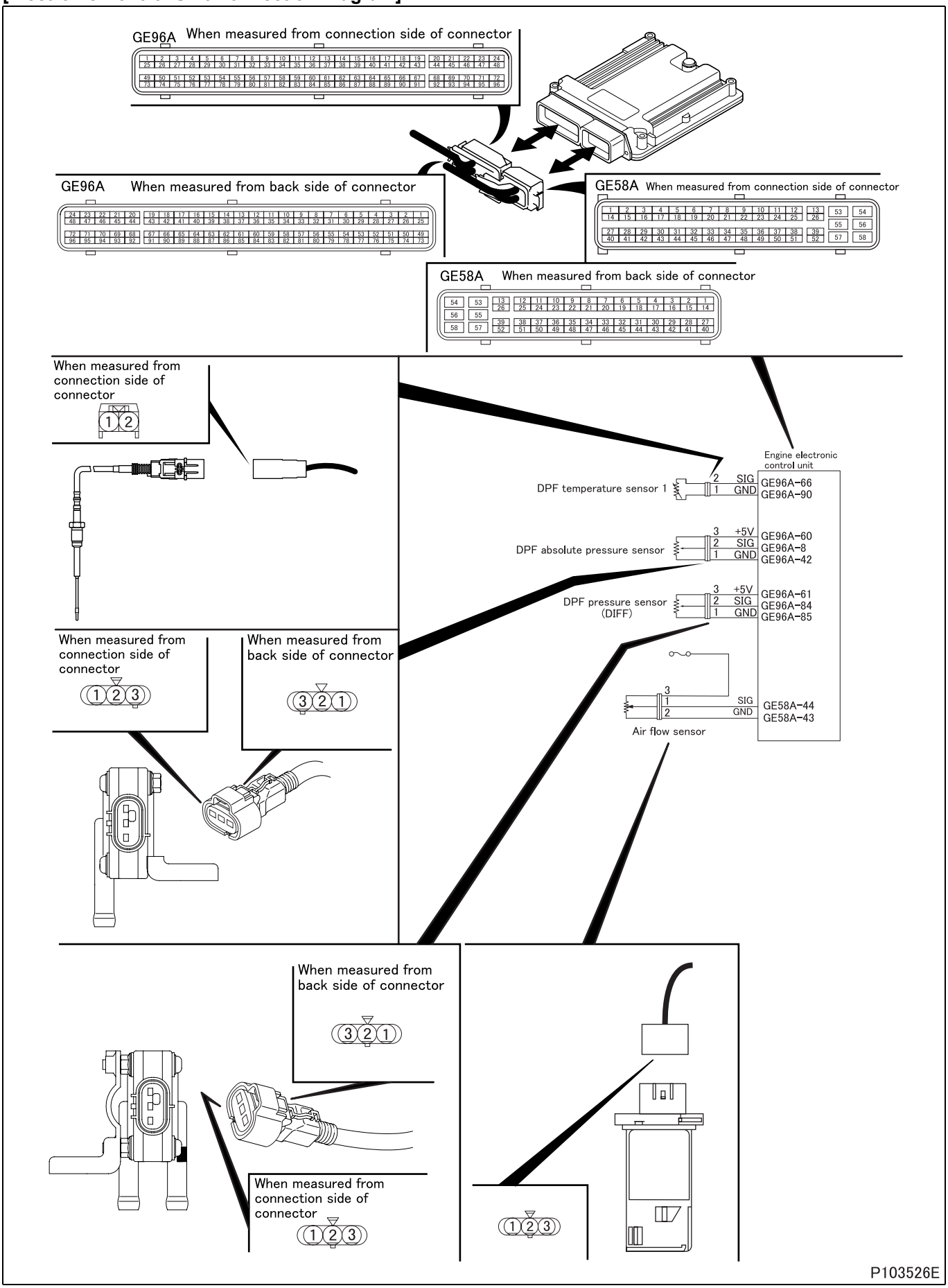

[Parts Identification and Location]

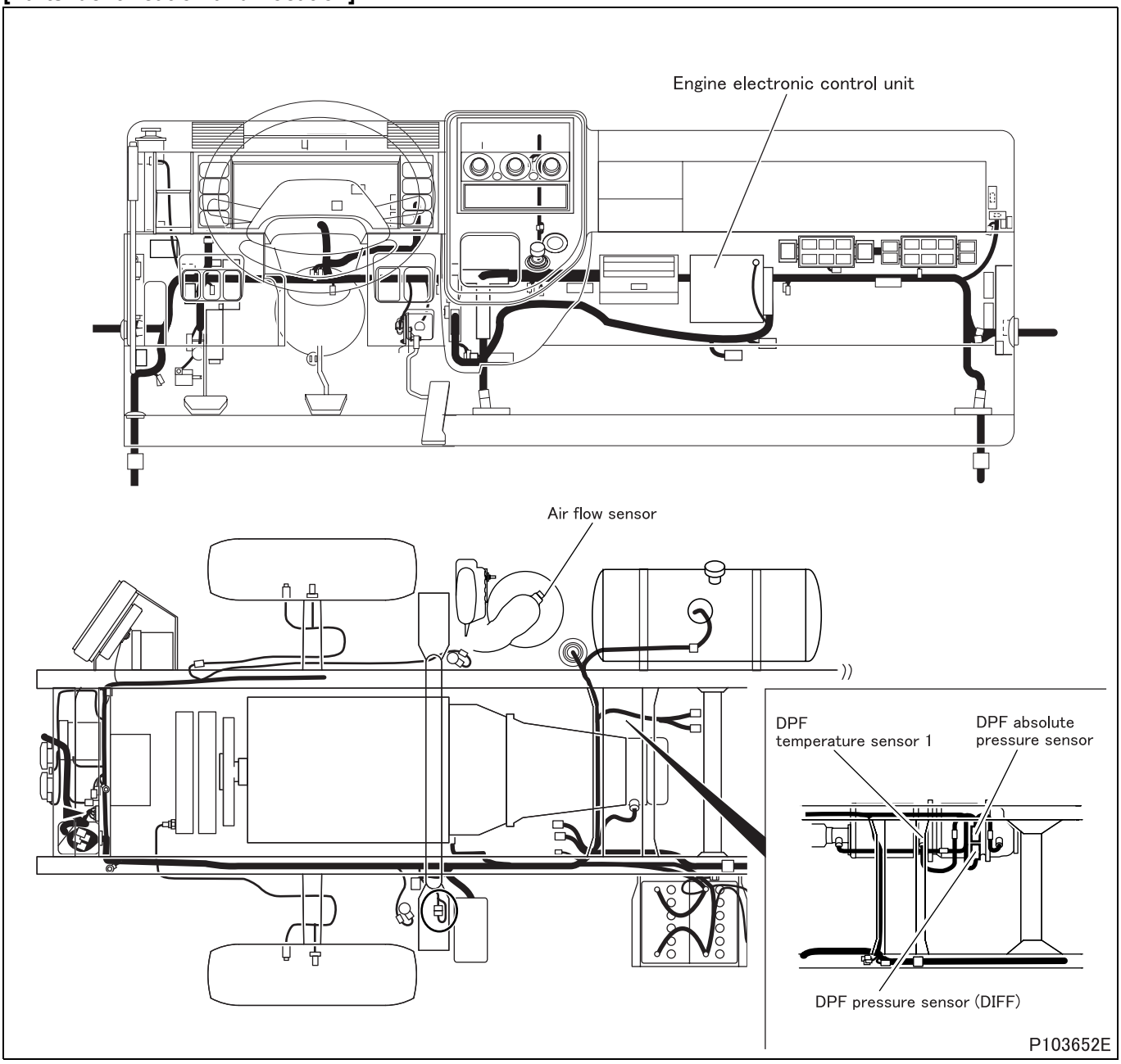

[Fault diagnosis]

- Perform checks in the sequence of the following steps.

Step 1	Inspection items		Inspection of oil level
	Maintenance item		Inspection of engine oil level
	Inspection condition		Engine stopped
	Requirements		Oil level for inspection is not exceeded.
	Inspection result (Is the judging standard satisfied?)	YES	Go to step 2.
		NO	After replacement of oil, go to step 2.

<Step 1 inspection diagram>

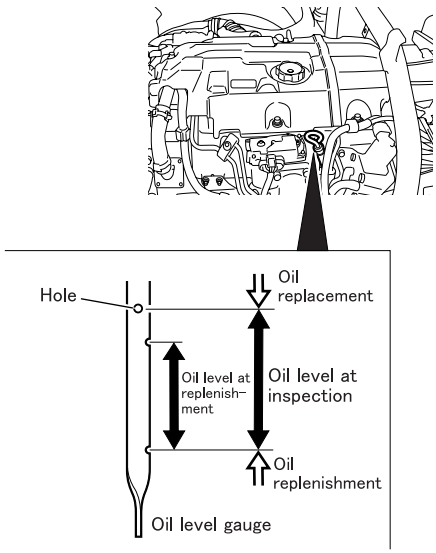

P103677E

Step 2	Inspection items		Inspection by manual diesel particulate filter regeneration
	Maintenance item		Perform Multi-Use Tester actuator test item No. A5 “DPF Regeneration (Manual)”, and clean ceramic diesel particulate filter.
	Inspection condition		• Vehicle: stationary (vehicle speed 0 km/h {0 MPH}) • Starter switch: ON (engine started) • Engine: Idling • Place the transmission in neutral. (place the automatic transmission in P range) • Parking brake: vehicle parked (parking brake switch: ON) • After engine warm-up
	Requirements		This diagnosis code does not occur again.
	Inspection result (Is the judging standard satisfied?)	YES	End of inspection
		NO	Go to step 3.

Step 3	Inspection items		Unit inspection of diesel particulate filter
	Maintenance item		Check the exhaust passage inside the diesel particulate filter for adhesion of soot in large quantity.
	Inspection condition		Remove diesel particulate filter.
	Requirements		No soot is deposited.
	Inspection result (Is the judging standard satisfied?)	YES	Go to step 4.
		NO	After replacement of ceramic filter, perform resetting the DPF-related information.

<Step 3 inspection diagram>

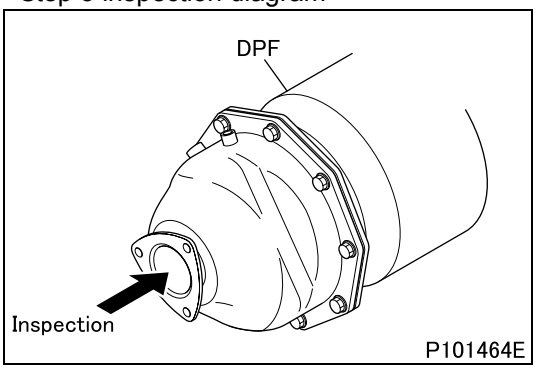

Step 4	Inspection items		Diesel Particulate Filter Unit Inspection for Clogging and Cleaning the Diesel Particulate Filter Unit
	Maintenance item		See Gr15 “Diesel Particulate Filter Unit Inspection for Clogging and Cleaning the Diesel Particulate Filter Unit”.
	Inspection condition		Perform the following preparatory works. • Place the transmission in neutral. (place the automatic transmission in P range) • Turn the steering wheel in neutral position and securely apply the parking brake. • Turn off air conditioner not to increase the engine speed. • Check diagnosis code of each electronic control system. If any fault exists, rectify it. • Resetting the DPF-related information (perform “History reset” of Multi-Use Tester) (See Gr15 “Resetting the DPF-related information”.) • Warm up the engine until the engine coolant has been heated to more than 70°C {158°F}. (verify from Service Data “Engine Coolant Temperature” or “31: Water Temperature”)
	Requirements		This diagnosis code does not occur again.
	Inspection result (Is the judging standard satisfied?)	YES	End of inspection
		NO	Go to step 5.

Step 5	Inspection items		Inspection by control data
	Maintenance item		Measure item No. B8 “DPF Indicator Lamp” of Service Data.
	Inspection condition		Perform Multi-Use Tester actuator test item No. A6 “DPF Lamp”.
	Requirements		Diesel particulate filter indicator lamp illuminates (automatic reset after 15 seconds)
	Inspection result (Is the judging standard satisfied?)	YES	Go to step 6.
		NO	Replacement of engine electronic control unit

Step 6	Inspection items		Inspection by control data
	Maintenance item		Measure item No. A4 “DPF SW” of Service Data.
	Inspection condition		–
	Requirements		Press diesel particulate filter cleaning switch and check that “DPF SW” display switches from OFF to ON.
	Inspection result (Is the judging standard satisfied?)	YES	Go to step 7.
		NO	Replacement of diesel particulate filter cleaning switch or engine electronic control unit

Step 7	Inspection items		Inspection of pressure hose
	Maintenance item		Check pressure hose of DPF absolute pressure sensor and DPF pressure sensor (DIFF) for connection and cracks.
	Inspection condition		–
	Requirements		Nothing abnormal detected
	Inspection result (Is the judging standard satisfied?)	YES	Go to step 8.
		NO	After correction and replacement of hose, go to step 8.

Step 8	Inspection items		Inspection of DPF pressure sensor (DIFF)
	Maintenance item		Measure value of voltage between connector terminal No.2 (+) and 1 (–).
	Inspection condition		• Apply voltage DC 5 V across terminals No. 3 (+) and 1 (–). • Gradually increase applied air pressure.
	Requirements		• 0 ± 3.5 kPa {0 ± 0.5 psi, 0 ± 0.04 kgf/cm^2}: 1 V • 100 ± 3.5 kPa {15 ± 0.5 psi, 1.02 ± 0.04 kgf/cm^2}: 4.5 V
	Inspection result (Is the judging standard satisfied?)	YES	Go to step 9.
		NO	Replacement of DPF pressure sensor (DIFF)

<Step 8 inspection diagram>

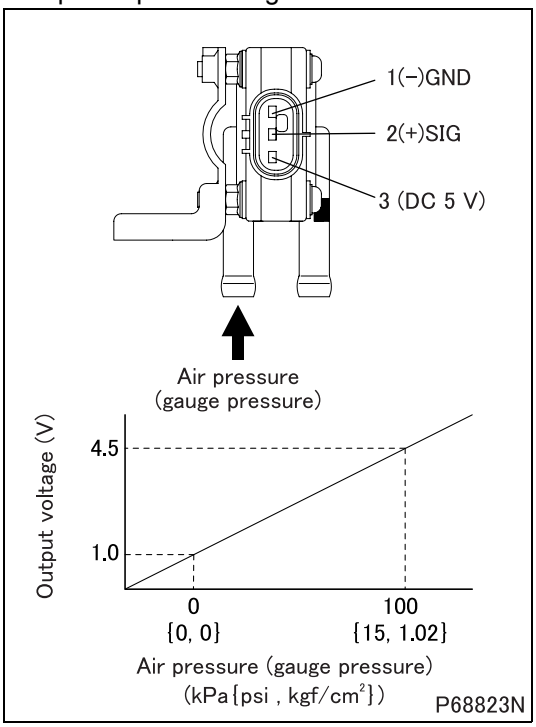

Step 9	Inspection items		Inspection of air flow sensor unit
	Maintenance item		Since inspection of single part is not easy, whether characteristics are deteriorated or not must be checked for the sensor mounted on the current vehicle by measuring and comparing the amount of sensor intake air of the sensor currently mounted on vehicle and that replaced with new one by the service data. **(1) Prepare for inspection** • Clean or replace air cleaner element. • Prepare a new air flow sensor. • Warm up the engine fully. **(2) Measure the intake air of current sensor** • Keep pressing the accelerator pedal until it bottom the stopper bolt from the idling state. (no load maximum rotation) • Measure the following items from among “Service data”. **<General Scanning Tool used>** • Engine speed: “Ne” (rpm) • Intake air flow rate: “Air Flow Rate from MAFS” (g/s) **<Multi-Use Tester used>** • Engine speed: 01 “Engine Revolution” (rpm) • Intake air flow rate: 60 “Air mass flow” (g/s) **(3) Measure the intake air of new sensor** • Replace the currently mounted sensor with a new sensor. • Keep pressing the accelerator pedal until it bottom the stopper bolt from the idling state. (no load maximum rotation) • Measure intake air flow at the same rpm as that of engine revolution in item (2) of “Service data”. **(4) Comparison whether characteristics are deteriorated** • Calculate the characteristics deterioration factor (%) by the following equation. • Characteristics deterioration factor (%) = (intake air of new item – current intake air) × 100/intake air of new item.
	Inspection condition		–
	Requirements		10% or less
	Inspection result (Is the judging standard satisfied?)	YES	Go to step 10.
		NO	Replacement of air flow sensor

Step 10	Inspection items		Inspection by control data
	Maintenance item		Perform actuator test item No. B2 “Fuel Leak Check”.
	Inspection condition		Engine start: At idle
	Requirements		There is no leak from injectors (four).
	Inspection result (Is the judging standard satisfied?)	YES	• Inspection of exhaust gas recirculation system (exhaust gas recirculation pipe, exhaust gas recirculation cooler, exhaust gas recirculation valve) • Inspection of engine
		NO	Replacement of injector

[Fault code]
Diagnosis code: P2533/Flash code: 66
[Monitor]
Failure of starter switch
[Fault (outline)]
Open circuit at electronic control unit inout
[Diagnosis check]
- Operational relation between starter switch and engine start is monitored.

[Code generation condition]
- Engine starts (engine revolutions are counted) without start signal from starter switch.
  (Warning lamp is lit and diagnosis code is displayed on third establishment of code generation condition.)

[Diagnosis check timing]
- Fault diagnosis is performed only once during the driving cycle.

[Diagnostic requirement]
- Engine operating mode: starting
- Previous engine operation mode: OFF
- Speed increase from engine speed sensor: more than 100 rpm
- Speed increase from cylinder recognition sensor: more than 100 rpm
- Vehicle speed: less than 1 km/h {0.62 MPH}
- Vehicle speed sensor: in order

[Control effected by electronic control unit during fault]
- Related fault check is stopped.

[Probable cause of trouble]
- Open-circuit or short-circuit of harness between electronic control unit and starter switch
- Malfunction of each connector
- Malfunction of starter switch
- Malfunction of engine start relay <Manual transmission>
- Malfunction of neutral start relay <Automatic transmission>
- Malfunction of electronic control unit

[Recoverability]
- Recovered if signal becomes normal when starter switch is turned OFF to ON (power supply resumed to electronic control unit).
  (Warning lamp is extinguished and diagnosis code is cleared at fourth display of diagnosis code after recovery.)

[Electronic Control Unit Connection Diagram]

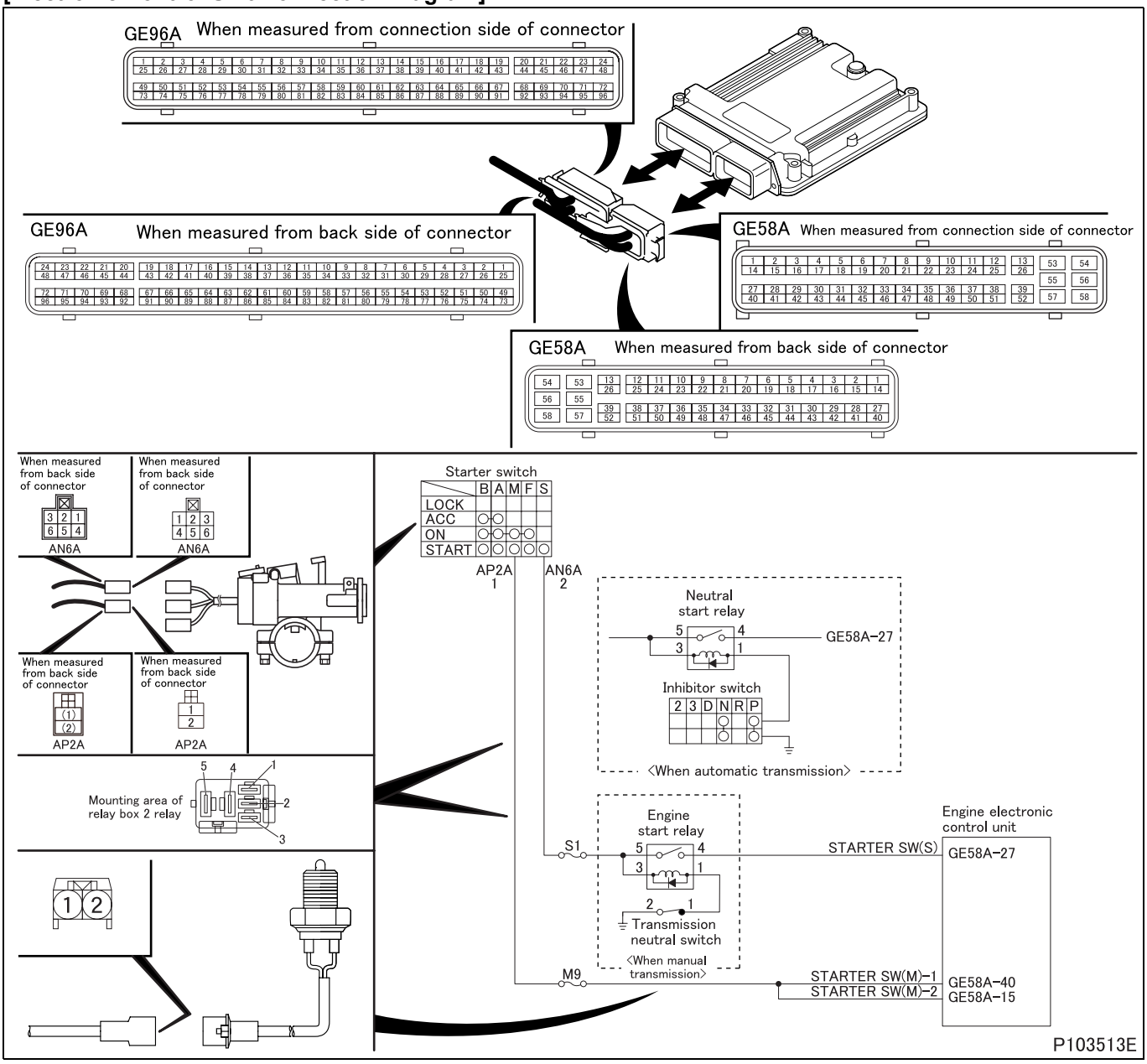

[Parts Identification and Location]

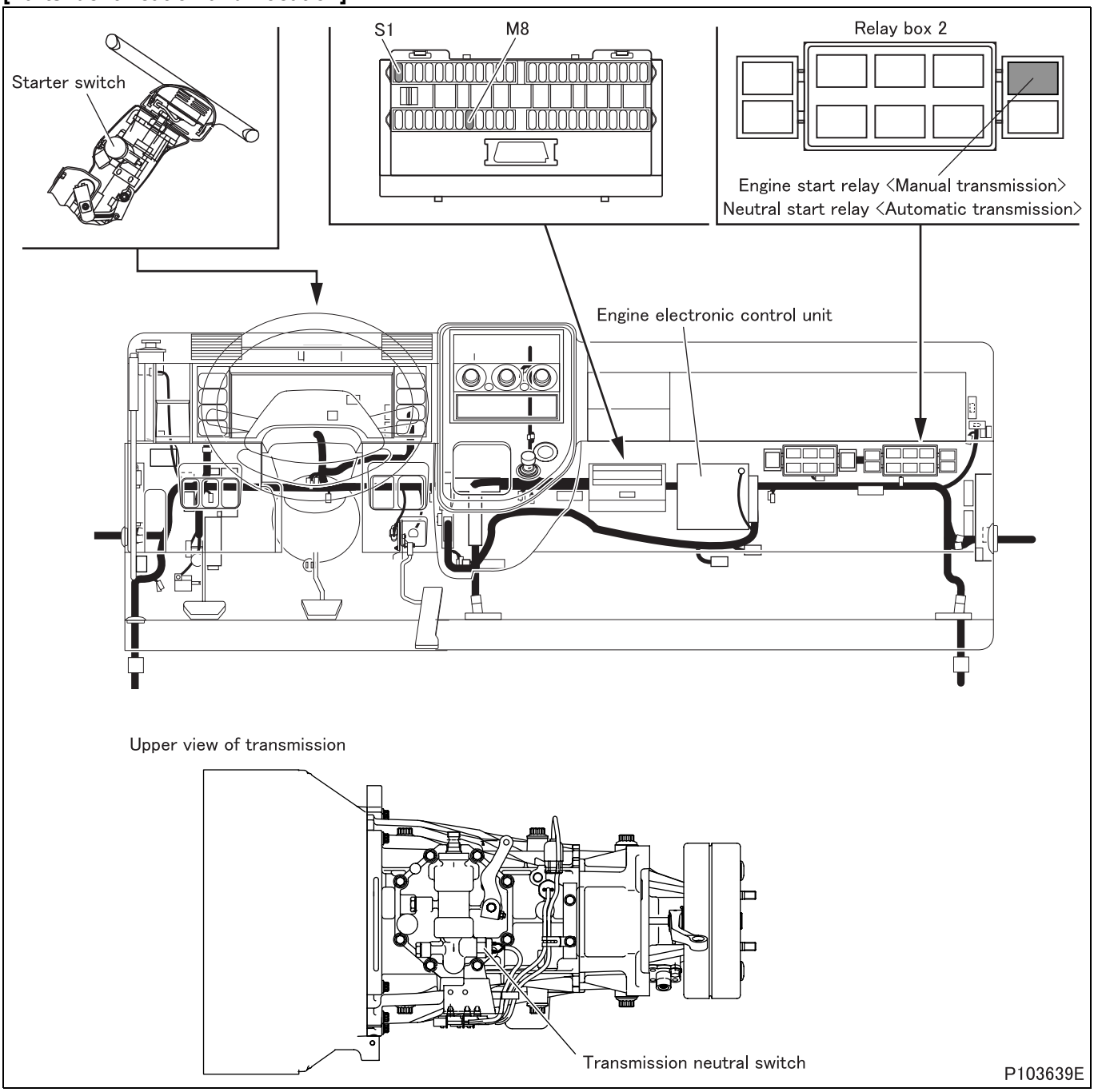

[Fault diagnosis]

- Perform checks in the sequence of the following steps.

Step 1	Inspection items		Inspection by control data
	Maintenance item		**<General Scanning Tool used>** • Measure value of voltage between electronic control unit connector (GE58A) terminal No. 27 (+) and ground (–). **<Multi-Use Tester used>** • Measure item No. A0 “Starter SW (S)” of Service Data.
	Inspection condition		• Transmission: neutral or P range • Starter switch: start
	Requirements		**<General Scanning Tool used>** • Same as battery voltage. **<Multi-Use Tester used>** • Displayed as “ON”.
	Inspection result (Is the judging standard satisfied?)	YES	Go to transient fault (See Gr00.).
		NO	Go to step 2.

Step 2	Inspection items		Inspection of electronic control unit connector
	Maintenance item		Inspection of connector
	Inspection condition		–
	Requirements		• Connector is properly connected. • No trace of water entry is found. • No corrosion is found in terminal. • Connection to terminal is appropriate.
	Inspection result (Is the judging standard satisfied?)	YES	Go to step 3.
		NO	Modify connector.

Step 3	Inspection items		Inspection of relay connector (power supply)
	Maintenance item		Measure value of voltage between connector terminal No. 4 (+) and ground (–).
	Inspection condition		• Transmission: neutral or P range • Starter switch: start
	Requirements		Same as battery voltage.
	Inspection result (Is the judging standard satisfied?)	YES	Go to step 9.
		NO	Go to step 4.

Step 4	Inspection items		Inspection of relay connector (signal)
	Maintenance item		Check transmission signal between connector terminal No. 1 (+) and ground (–).
	Inspection condition		Transmission: neutral or P range
	Requirements		There is continuity.
	Inspection result (Is the judging standard satisfied?)	YES	Go to step 5.
		NO	• Replacement of transmission neutral switch <Manual transmission> • Replacement of inhibitor switch <Automatic transmission>

Step 5	Inspection items		Inspection of relay unit
	Maintenance item		Measure continuity between terminals No. 4 and 5 when relay operates.
	Inspection condition		Apply battery voltage across connector terminals No. 3 (+) and 1 (–).
	Requirements		There is continuity.
	Inspection result (Is the judging standard satisfied?)	YES	Go to step 6.
		NO	Replacement of relay

<Step 5 inspection diagram>

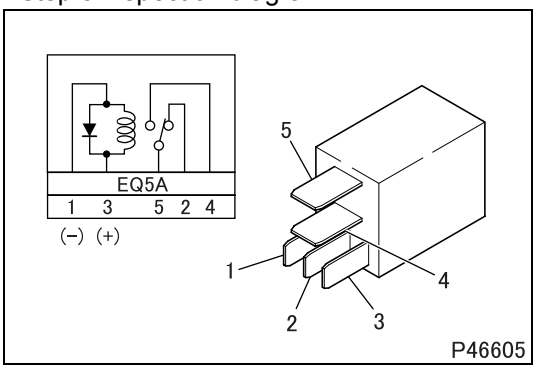

Step 6	Inspection items		Inspection of harness between starter switch and relay
	Maintenance item		Check circuit between starter switch connector (AN6A) terminal No. 2 and relay connector terminal No. 5 and 3.
	Inspection condition		Disconnect each device from harness and measure from connection side of harness connector.
	Requirements		There is continuity.
	Inspection result (Is the judging standard satisfied?)	YES	Go to step 8.
		NO	Go to step 7.

Step 7	Inspection items		Inspection of fuse (S1)
	Maintenance item		Check open-circuit of fuse (S1)
	Inspection condition		–
	Requirements		There is continuity.
	Inspection result (Is the judging standard satisfied?)	YES	Go to step 8.
		NO	Replacement of fuse

Step 8	Inspection items		Inspection of starter switch unit
	Maintenance item		Check continuity between connector terminals.
	Inspection condition		Check presence of continuity in each switch position.
	Requirements		• LOCK: There is no continuity. • ACC: There is continuity between [2] and (3) • ON: There is continuity between [1], [2], (3) and (4) • START: There is continuity between [1], [2], (2), (3) and (4) • Terminal No. with [ ] shows connector terminal of AP2A and Terminal No. with ( ) shows connector terminal of AN6A.
	Inspection result (Is the judging standard satisfied?)	YES	Go to step 9.
		NO	Replacement of starter switch

<Step 8 inspection diagram>

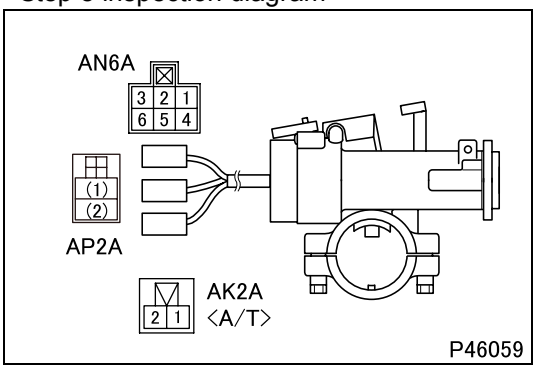

Step 9	Inspection items		Inspection of harness between electronic control unit and relay
	Maintenance item		Check circuit between electronic control unit connector (GE58A) terminal No. 27 and connector terminal No. 4.
	Inspection condition		Disconnect each device from harness and measure from connection side of harness connector.
	Requirements		There is continuity.
	Inspection result (Is the judging standard satisfied?)	YES	Replacement of electronic control unit
		NO	Modify harness.

[Fault code]
Diagnosis code: P253C/Flash code: 61
[Monitor]
Failure of auxiliary equipment sensor
[Fault (outline)]
Low signal range check
[Diagnosis check]
- Accelerator pedal position during cab back control is monitored through auxiliary equipment sensor for acceleration opening within specified value.

[Code generation condition]
- Voltage from auxiliary equipment sensor remains below 0.49 V for 1 second.
  (Diagnosis code is displayed on first establishment of code generation condition.)

[Diagnosis check timing]
- Fault diagnosis is performed each time when the power takeoff control is activated.

[Diagnostic requirement]
–

[Control effected by electronic control unit during fault]
- Power take-off accelerator pedal position is fixed at backup value.

[Probable cause of trouble]
- Open-circuit or short-circuit of harness between electronic control unit and auxiliary equipment sensor
- Malfunction of each connector
- Malfunction of auxiliary equipment sensor
- Malfunction of electronic control unit

[Recoverability]
- Recovered if signal becomes normal when starter switch is ON position.
  (Warning lamp and diagnosis code is cleared simultaneously with recovery.)

[Electronic Control Unit Connection Diagram]

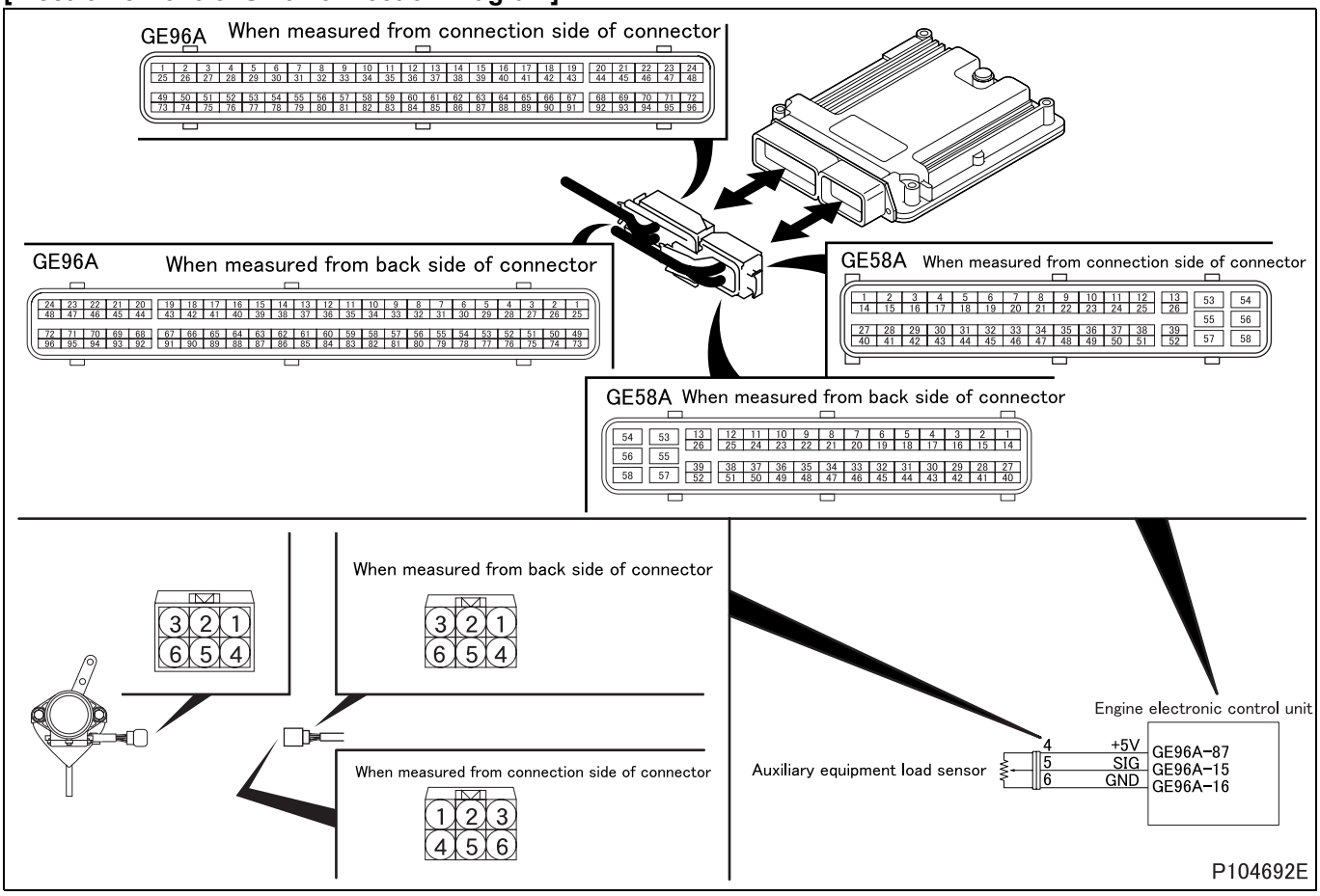

[Parts Identification and Location]

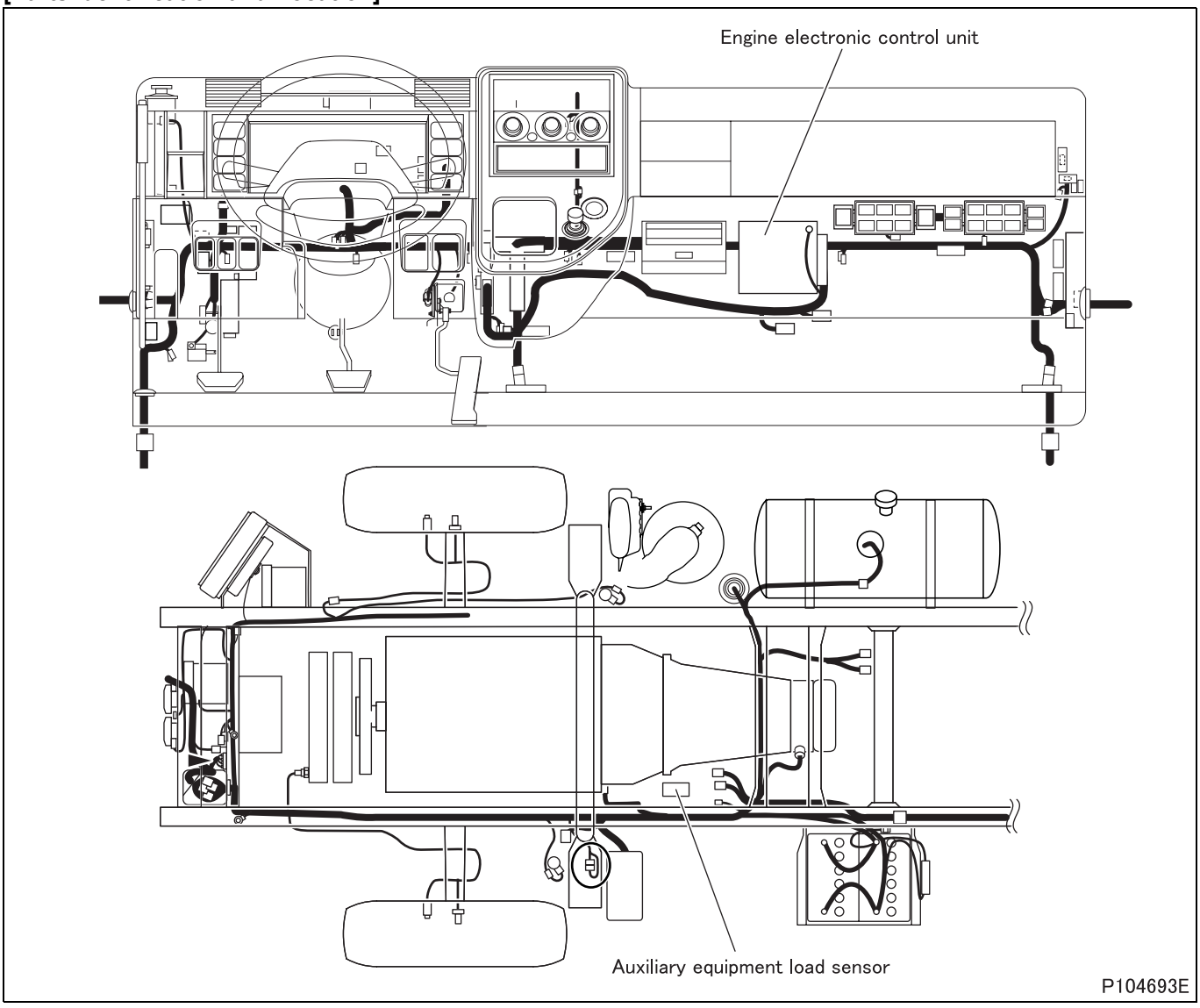

[Fault diagnosis]

- Perform checks in the sequence of the following steps.

Step 1	Inspection items		Inspection by control data
	Maintenance item		Measurement of item No. 84 “PTO Accel Sensor Voltage” of Service Data.
	Inspection condition		–
	Requirements		• Idling position: 0.85 ± 0.1 V • Full-load position: 3.0 ± 0.1 V
	Inspection result (Is the judging standard satisfied?)	YES	Go to transient fault (See Gr00.).
		NO	Go to step 2.

Step 2	Inspection items		Inspection by electronic control unit connector (signal)
	Maintenance item		Measure value of voltage between connector (GE96A) terminal No. 15 (+) and 16 (–).
	Inspection condition		• Starter switch: ON (Do not start engine) • Measure from back side of harness connector with each device connected to harness.
	Requirements		• Idling position: 0.85 ± 0.1 V • Full-load position: 3.0 ± 0.1 V
	Inspection result (Is the judging standard satisfied?)	YES	Go to step 5.
		NO	Go to step 3.

Step 3	Inspection items		Inspection by electronic control unit connector (power supply)
	Maintenance item		Measure value of voltage between connector (GE96A) terminal No. 87 (+) and 16 (–).
	Inspection condition		• Starter switch: ON (Do not start engine) • Measure from back side of harness connector with each device connected to harness.
	Requirements		5 V
	Inspection result (Is the judging standard satisfied?)	YES	Go to step 4.
		NO	Go to step 5.

Step 4	Inspection items		Inspection by electronic control unit connector (ground)
	Maintenance item		Measure value of voltage between connector (GE96A) terminal No. 16 (+) and (GE58A) terminal No. 53 (–).
	Inspection condition		• Starter switch: ON (Do not start engine) • Measure from back side of harness connector with each device connected to harness.
	Requirements		0 V
	Inspection result (Is the judging standard satisfied?)	YES	Go to step 6.
		NO	Go to step 5.

Step 5	Inspection items		Inspection of electronic control unit connector
	Maintenance item		Inspection of connector
	Inspection condition		–
	Requirements		• Connector is properly connected. • No trace of water entry is found. • No corrosion is found in terminal. • Connection to terminal is appropriate.
	Inspection result (Is the judging standard satisfied?)	YES	Go to step 12.
		NO	Modify connector.

Step 6	Inspection items		Inspection of sensor connector
	Maintenance item		Inspection of connector
	Inspection condition		–
	Requirements		• Connector is properly connected. • No trace of water entry is found. • No corrosion is found in terminal. • Connection to terminal is appropriate.
	Inspection result (Is the judging standard satisfied?)	YES	Go to step 7.
		NO	Modify connector.

Step 7	Inspection items		Inspection of auxiliary equipment sensor unit
	Maintenance item		Measure value of voltage between connector terminal No. 5 (+) and 6 (–).
	Inspection condition		Apply voltage DC 5 V across connector terminals No.4 (+) and 6 (–).
	Requirements		• Idling position: 0.85 ± 0.1 V • Full-load position: 3.0 ± 0.1 V
	Inspection result (Is the judging standard satisfied?)	YES	Go to step 8.
		NO	Replacement of sensor

<Step 7 inspection diagram>

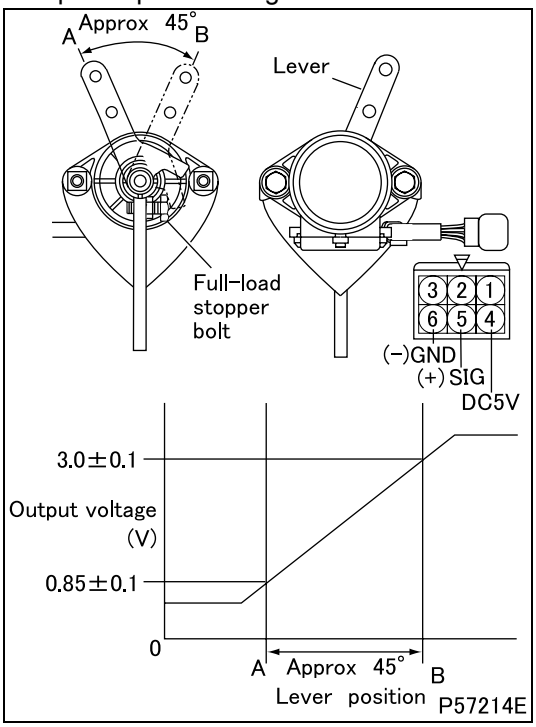

Step 8	Inspection items		Inspection by sensor connector
	Maintenance item		Measure value of voltage between connector terminal No. 4 (+) and 6 (–).
	Inspection condition		• Starter switch: ON (Do not start engine) • Measure from back side of harness connector with each device connected to harness.
	Requirements		5 V
	Inspection result (Is the judging standard satisfied?)	YES	Go to step 10.
		NO	Go to step 9.

Step 9	Inspection items		Inspection of harness between electronic control unit and sensor (power supply)
	Maintenance item		Check circuit between electronic control unit connector (GE96A) terminal No. 87 and sensor connector terminal No. 4.
	Inspection condition		Disconnect each device from harness and measure from connection side of harness connector.
	Requirements		There is continuity.
	Inspection result (Is the judging standard satisfied?)	YES	Go to step 12.
		NO	Modify harness.

Step 10	Inspection items		Inspection of harness between electronic control unit and sensor (ground)
	Maintenance item		Check circuit between sensor connector terminal No. 6 and electronic control unit connector (GE96A) terminal No. 16.
	Inspection condition		Disconnect each device from harness and measure from connection side of harness connector.
	Requirements		There is continuity.
	Inspection result (Is the judging standard satisfied?)	YES	Go to step 11.
		NO	Modify harness.

Step 11	Inspection items		Inspection of harness between electronic control unit and sensor (signal)
	Maintenance item		Check circuit between sensor connector terminal No. 5 and electronic control unit connector (GE96A) terminal No. 15.
	Inspection condition		Disconnect each device from harness and measure from connection side of harness connector.
	Requirements		There is continuity.
	Inspection result (Is the judging standard satisfied?)	YES	Go to step 12.
		NO	Modify harness.

Step 12	Inspection items		Inspection by control data
	Maintenance item		Measurement of item No. 84 “PTO Accel Sensor Voltage” of Service Data.
	Inspection condition		–
	Requirements		• Idling position: 0.85 ± 0.1 V • Full-load position: 3.0 ± 0.1 V
	Inspection result (Is the judging standard satisfied?)	YES	Go to transient fault (See Gr00.).
		NO	Replacement of electronic control unit

[Fault code]
Diagnosis code: P253D/Flash code: 61
[Monitor]
Failure of auxiliary equipment sensor
[Fault (outline)]
High signal range check
[Diagnosis check]
- Accelerator pedal position during cab back control is monitored through auxiliary equipment sensor for acceleration opening within specified value.

[Code generation condition]
- Voltage from auxiliary equipment sensor remains over 3.49 V for 1 second.
  (Diagnosis code is displayed on first establishment of code generation condition.)

[Diagnosis check timing]
- Fault diagnosis is performed each time when the power takeoff control is activated.

[Diagnostic requirement]
–

[Control effected by electronic control unit during fault]
- Power take-off accelerator pedal position is fixed at backup value.

[Probable cause of trouble]
- Open-circuit or short-circuit of harness between electronic control unit and auxiliary equipment sensor
- Malfunction of each connector
- Malfunction of auxiliary equipment sensor
- Malfunction of electronic control unit

[Recoverability]
- Recovered if signal becomes normal when starter switch is ON position.
  (Warning lamp and diagnosis code is cleared simultaneously with recovery.)

[Electronic Control Unit Connection Diagram]

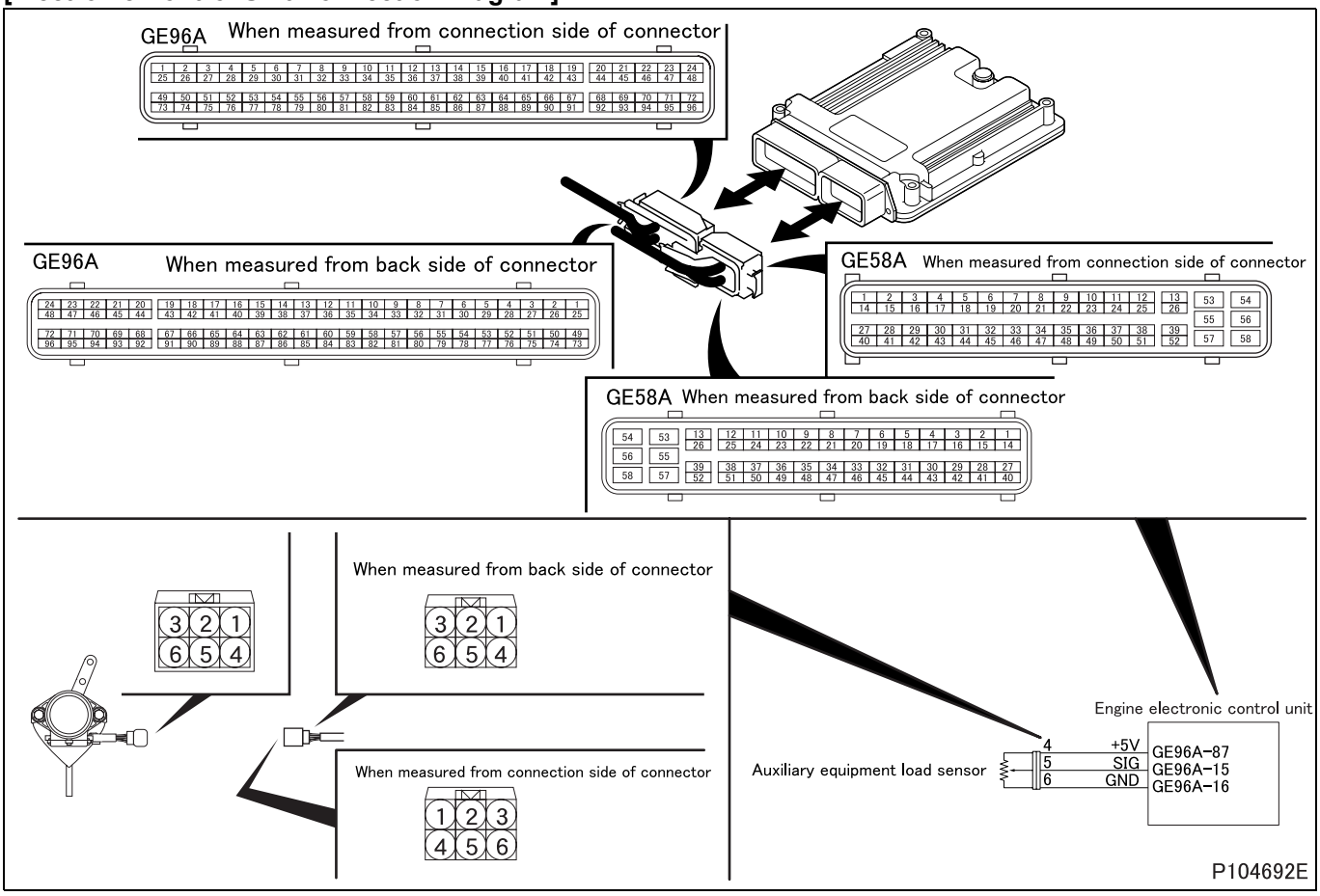

[Parts Identification and Location]

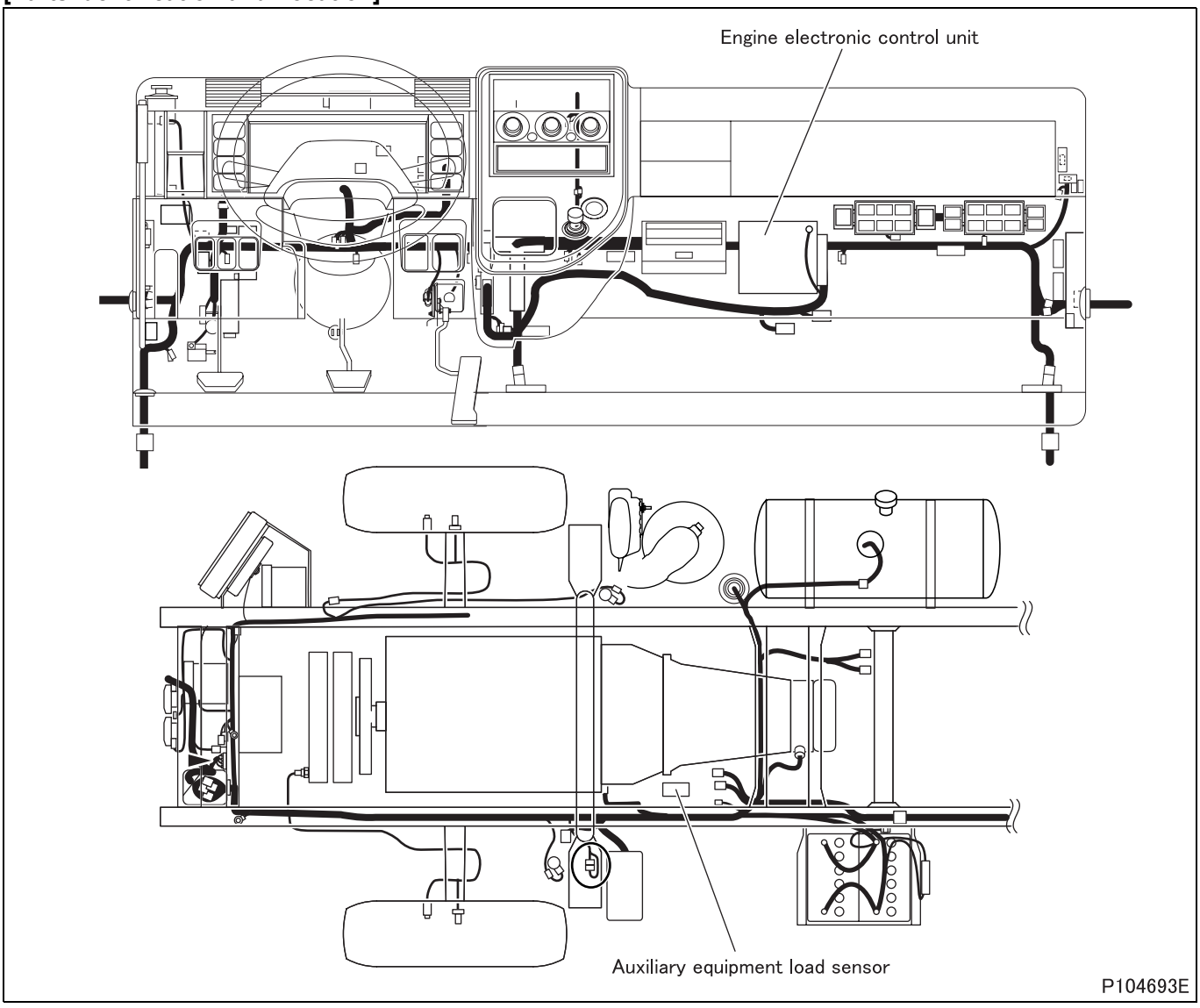

[Fault diagnosis]

- Perform checks in the sequence of the following steps.

Step 1	Inspection items		Inspection by control data
	Maintenance item		Measurement of item No. 84 “PTO Accel Sensor Voltage” of Service Data.
	Inspection condition		–
	Requirements		• Idling position: 0.85 ± 0.1 V • Full-load position: 3.0 ± 0.1 V
	Inspection result (Is the judging standard satisfied?)	YES	Go to transient fault (See Gr00.).
		NO	Go to step 2.

Step 2	Inspection items		Inspection by electronic control unit connector (signal)
	Maintenance item		Measure value of voltage between connector (GE96A) terminal No. 15 (+) and 16 (–).
	Inspection condition		• Starter switch: ON (Do not start engine) • Measure from back side of harness connector with each device connected to harness.
	Requirements		• Idling position: 0.85 ± 0.1 V • Full-load position: 3.0 ± 0.1 V
	Inspection result (Is the judging standard satisfied?)	YES	Go to step 5.
		NO	Go to step 3.

Step 3	Inspection items		Inspection by electronic control unit connector (power supply)
	Maintenance item		Measure value of voltage between connector (GE96A) terminal No. 87 (+) and 16 (–).
	Inspection condition		• Starter switch: ON (Do not start engine) • Measure from back side of harness connector with each device connected to harness.
	Requirements		5 V
	Inspection result (Is the judging standard satisfied?)	YES	Go to step 4.
		NO	Go to step 5.

Step 4	Inspection items		Inspection by electronic control unit connector (ground)
	Maintenance item		Measure value of voltage between connector (GE96A) terminal No. 16 (+) and (GE58A) terminal No. 53 (–).
	Inspection condition		• Starter switch: ON (Do not start engine) • Measure from back side of harness connector with each device connected to harness.
	Requirements		0 V
	Inspection result (Is the judging standard satisfied?)	YES	Go to step 6.
		NO	Go to step 5.

Step 5	Inspection items		Inspection of electronic control unit connector
	Maintenance item		Inspection of connector
	Inspection condition		–
	Requirements		• Connector is properly connected. • No trace of water entry is found. • No corrosion is found in terminal. • Connection to terminal is appropriate.
	Inspection result (Is the judging standard satisfied?)	YES	Go to step 12.
		NO	Modify connector.

Step 6	Inspection items		Inspection of sensor connector
	Maintenance item		Inspection of connector
	Inspection condition		–
	Requirements		• Connector is properly connected. • No trace of water entry is found. • No corrosion is found in terminal. • Connection to terminal is appropriate.
	Inspection result (Is the judging standard satisfied?)	YES	Go to step 7.
		NO	Modify connector.

Step 7	Inspection items		Inspection of auxiliary equipment sensor unit
	Maintenance item		Measure value of voltage between connector terminal No. 5 (+) and 6 (–).
	Inspection condition		Apply voltage DC 5 V across connector terminals No. 4 (+) and 6 (–).
	Requirements		• Idling position: 0.85 ± 0.1 V • Full-load position: 3.0 ± 0.1 V
	Inspection result (Is the judging standard satisfied?)	YES	Go to step 8.
		NO	Replacement of sensor

<Step 7 inspection diagram>

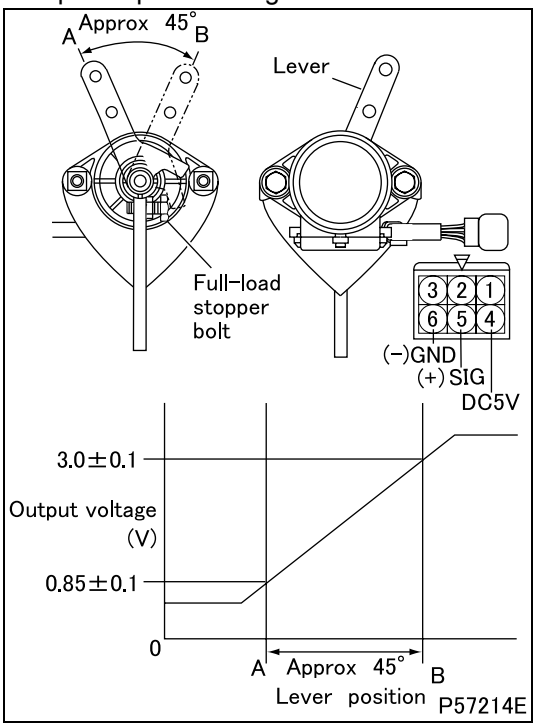

Step 8	Inspection items		Inspection by sensor connector
	Maintenance item		Measure value of voltage between connector terminal No. 4 (+) and 6 (–).
	Inspection condition		• Starter switch: ON (Do not start engine) • Measure from back side of harness connector with each device connected to harness.
	Requirements		5 V
	Inspection result (Is the judging standard satisfied?)	YES	Go to step 10.
		NO	Go to step 9.

Step 9	Inspection items		Inspection of harness between electronic control unit and sensor (power supply)
	Maintenance item		Check circuit between electronic control unit connector (GE96A) terminal No. 87 and sensor connector terminal No. 4.
	Inspection condition		Disconnect each device from harness and measure from connection side of harness connector.
	Requirements		There is continuity.
	Inspection result (Is the judging standard satisfied?)	YES	Go to step 12.
		NO	Modify harness.

Step 10	Inspection items		Inspection of harness between electronic control unit and sensor (ground)
	Maintenance item		Check circuit between sensor connector terminal No. 6 and electronic control unit connector (GE96A) terminal No. 16.
	Inspection condition		Disconnect each device from harness and measure from connection side of harness connector.
	Requirements		There is continuity.
	Inspection result (Is the judging standard satisfied?)	YES	Go to step 11.
		NO	Modify harness.

Step 11	Inspection items		Inspection of harness between electronic control unit and sensor (signal)
	Maintenance item		Check circuit between sensor connector terminal No. 5 and electronic control unit connector (GE96A) terminal No. 15.
	Inspection condition		Disconnect each device from harness and measure from connection side of harness connector.
	Requirements		There is continuity.
	Inspection result (Is the judging standard satisfied?)	YES	Go to step 12.
		NO	Modify harness.

Step 12	Inspection items		Inspection by control data
	Maintenance item		Measurement of item No. 84 “PTO Accel Sensor Voltage” of Service Data.
	Inspection condition		–
	Requirements		• Idling position: 0.85 ± 0.1 V • Full-load position: 3.0 ± 0.1 V
	Inspection result (Is the judging standard satisfied?)	YES	Go to transient fault (See Gr00.).
		NO	Replacement of electronic control unit

[Fault code]
Diagnosis code: P2563/Flash code: 51
[Monitor]
Turbocharger actuator system
[Fault (outline)]
- Low signal range check
- High signal range check

[Diagnosis check]
- Turbocharger electronic drive unit monitors turbocharger actuator internal circuit for fault (through throttle position sensor).

[Code generation condition]
- Position sensor output voltage remains 0 V (low pulse) or 8 to 11 V (high pulse) for 2 seconds.
  (Warning lamp is lit and diagnosis code is displayed on third establishment of code generation condition.)

[Diagnosis check timing]
- Fault diagnosis is continuously performed during the driving cycle.

[Diagnostic requirement]
- Controller area network communication in order

[Control effected by electronic control unit during fault]
- Exhaust gas recirculation control is stopped.
- Throttle controls disabled
- Diesel particulate filter regeneration is stopped.
- Related fault check is stopped.

[Probable cause of trouble]
- Open-circuit or short-circuit of harness between electronic drive unit and turbocharger actuator
- Malfunction of each connector
- Malfunction of turbocharger motor (built in turbocharger actuator)
- Malfunction of turbocharger position sensor (built in turbocharger actuator)
- Malfunction of electronic drive unit
- Malfunction of electronic drive unit relay

[Recoverability]
- Recovered if signal becomes normal when starter switch is turned OFF to ON (power supply resumed to electronic control unit).
  (Warning lamp is extinguished and diagnosis code is cleared at fourth display of diagnosis code after recovery.)

[Electronic Control Unit Connection Diagram]

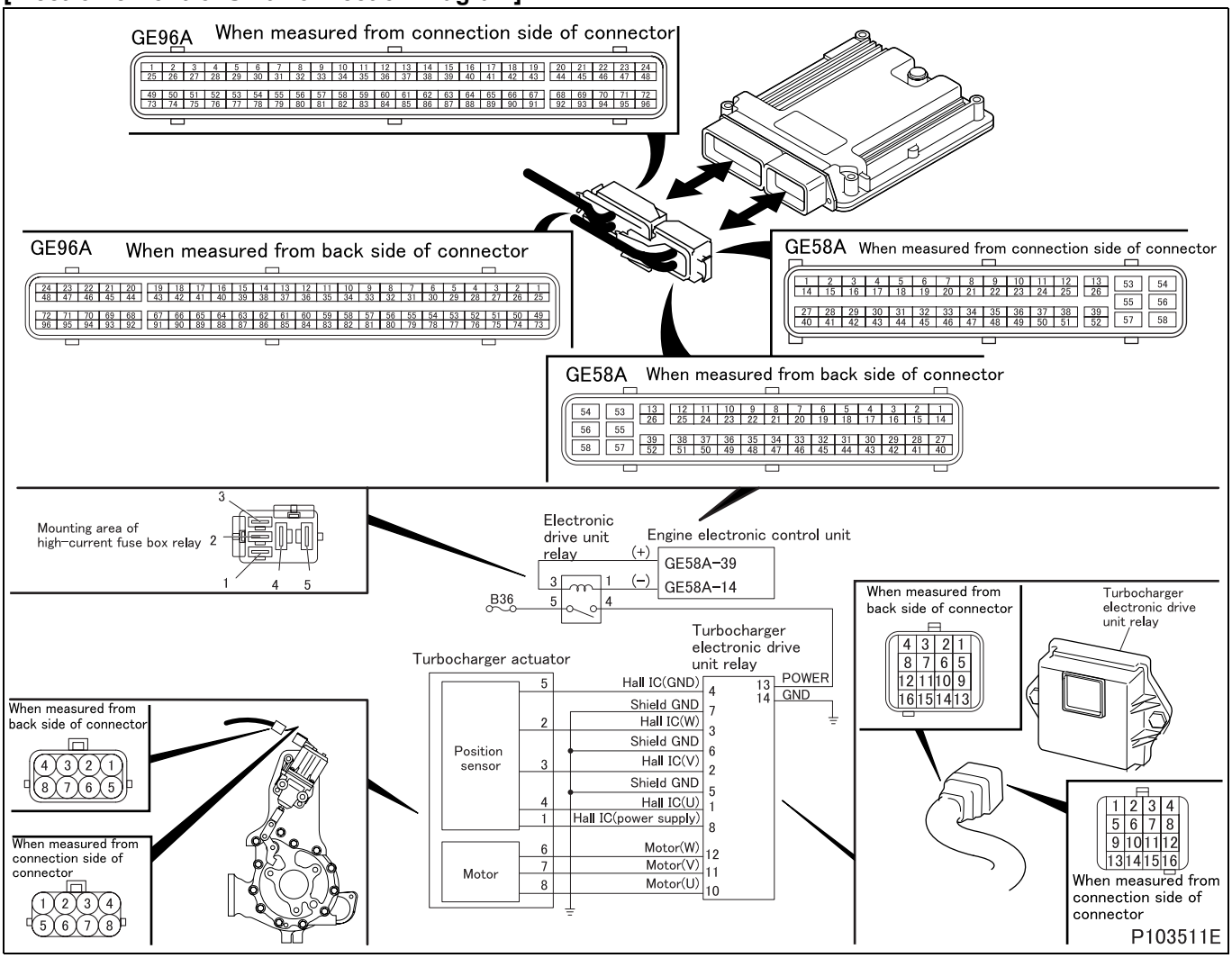

[Parts Identification and Location]

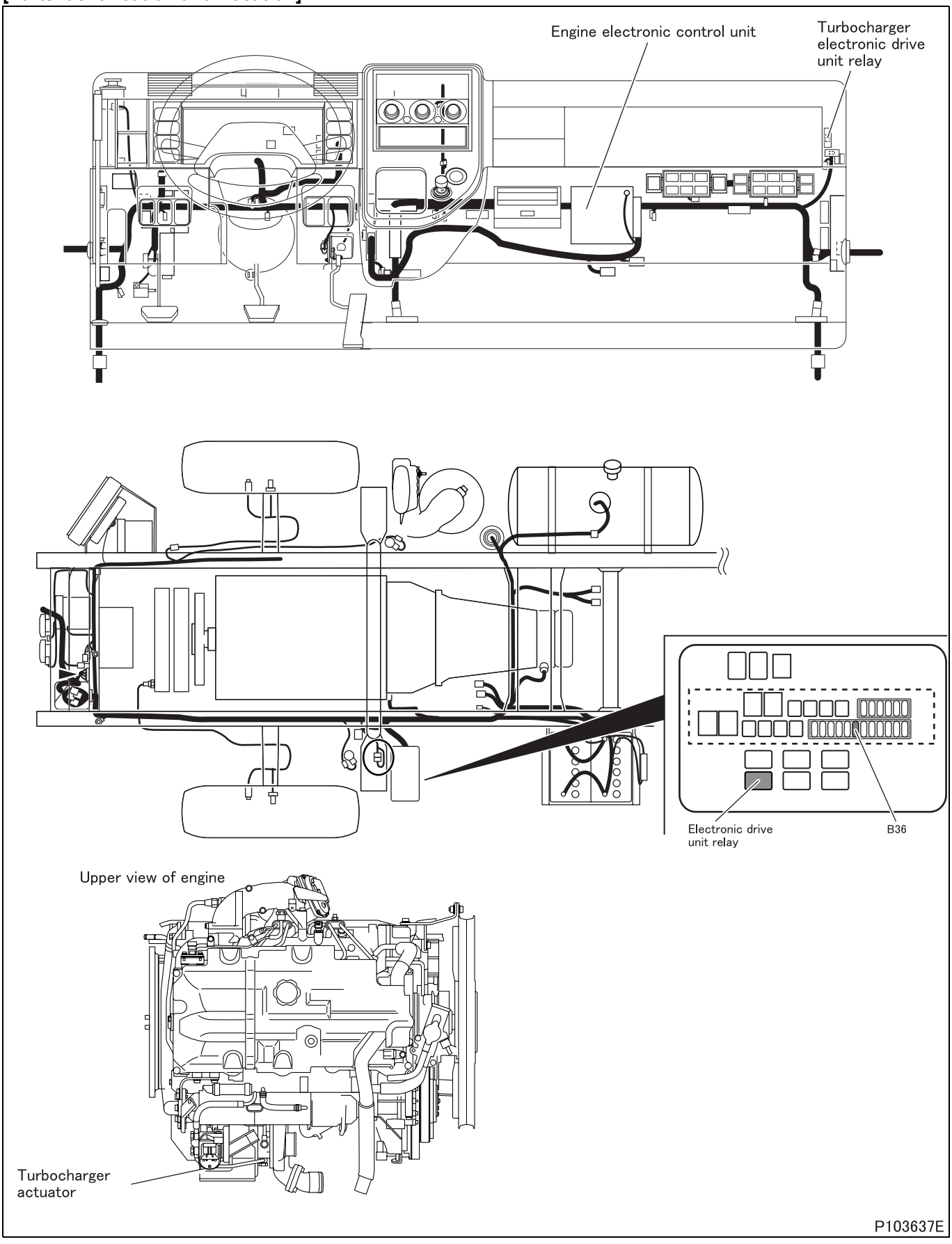

[Fault diagnosis]

- Perform checks in the sequence of the following steps.

Step 1	Inspection items		Inspection by control data
	Maintenance item		Check if following diagnosis codes occur simultaneously. • P0685 “EDU Relay (Open)” • P0686 “EDU Relay (Low)” • P0687 “EDU Relay (High)” • P0688 “EDU Relay (Over Load)”
	Inspection condition		• Starter switch: ON • Engine: stopped
	Requirements		Codes occur.
	Inspection result (Is the judging standard satisfied?)	YES	Inspect diagnosis code that is occurring.
		NO	Go to step 2.

Step 2	Inspection items		Inspection of electronic drive unit connector
	Maintenance item		Inspection of connector
	Inspection condition		–
	Requirements		• Connector is properly connected. • No trace of water entry is found. • No corrosion is found in terminal. • Connection to terminal is appropriate.
	Inspection result (Is the judging standard satisfied?)	YES	Go to step 3.
		NO	Modify connector.

Step 3	Inspection items		Inspection of electronic drive unit connector (power supply)
	Maintenance item		Measure value of voltage between connector terminal No. 13 (+) and 14 (–).
	Inspection condition		• Starter switch: ON • Engine: stopped • Disconnect connector and measure from harness side. • Perform actuator test item No. AF “EDU Relay”.
	Requirements		Same as battery voltage.
	Inspection result (Is the judging standard satisfied?)	YES	Go to transient fault (See Gr00.).
		NO	Go to step 4.

Step 4	Inspection items		Inspection of relay connector
	Maintenance item		Inspection of connector
	Inspection condition		–
	Requirements		• Connector is properly connected. • No trace of water entry is found. • No corrosion is found in terminal. • Connection to terminal is appropriate.
	Inspection result (Is the judging standard satisfied?)	YES	Go to step 5.
		NO	Modify connector.

Step 5	Inspection items		Inspection of harness between fuse and relay
	Maintenance item		Check circuit between fuse No. B36 and relay connector terminal No. 5.
	Inspection condition		Disconnect each device from harness and measure from connection side of harness connector.
	Requirements		There is continuity.
	Inspection result (Is the judging standard satisfied?)	YES	Go to step 6.
		NO	Modify harness.

Step 6	Inspection items		Inspection of harness between relay and electronic drive unit
	Maintenance item		Check circuit between relay connector terminal No. 4 and electronic drive unit connector terminal No. 13.
	Inspection condition		Disconnect each device from harness and measure from connection side of harness connector.
	Requirements		There is continuity.
	Inspection result (Is the judging standard satisfied?)	YES	After replacement of electronic drive unit relay, go to step 7.
		NO	Modify harness.

Step 7	Inspection items		Inspection of harness between electronic drive unit and ground
	Maintenance item		Check circuit between electronic drive unit connector terminal No. 14 and chassis ground.
	Inspection condition		Disconnect each device from harness and measure from connection side of harness connector.
	Requirements		There is continuity.
	Inspection result (Is the judging standard satisfied?)	YES	Replacement of electronic drive unit
		NO	Modify harness.

[Fault code]
Diagnosis code: P2670/Flash code: 36
[Monitor]
Abnormality of common rail pressure (comparison)
[Fault (outline)]
Short circuit ground
[Diagnosis check]
- MPROP (rail pressure control valve) power of engine electronic control unit is monitored for fault.

[Code generation condition]
- Power OFF (shorted to ground) remains as detected for 1 second.
  (Warning lamp is lit and diagnosis code is displayed on first establishment of code generation condition.)

[Diagnosis check timing]
- Fault diagnosis is continuously performed during the driving cycle.

[Diagnostic requirement]
–

[Control effected by electronic control unit during fault]
- Exhaust gas recirculation control is stopped.
- Throttle controls disabled
- Vapor smoke emission control during long-time idling is stopped.
- Diesel particulate filter regeneration is stopped.

[Probable cause of trouble]
- Malfunction of supply pump
- Malfunction of pressure limiter
- Airtight malfunction of injector
- Plugged fuel system

[Recoverability]
- Recovered if signal becomes normal when starter switch is turned OFF to ON (power supply resumed to electronic control unit).
  (Warning lamp is extinguished and diagnosis code is cleared simultaneously with recovery.)

[Fault diagnosis]

- Perform checks in the sequence of the following steps.

Step 1	Inspection items		Inspection by control data
	Maintenance item		Check if following diagnosis codes occur simultaneously. • P0093 “CRS (Fuel Leak)” • P0148 “CRS (Fuel Delivery)” • P0191 “CRS Pressure SNSR (Plausibility)” • P0192 “CRS Pressure SNSR (Low)” • P0193 “CRS Pressure SNSR (High)” • P0201 “Injector M/V-Cylinder 1 (Load)” • P0202 “Injector M/V-Cylinder 2 (Load)” • P0203 “Injector M/V-Cylinder 3 (Load)” • P0204 “Injector M/V-Cylinder 4 (Load)” • P0261 “Injector #1-A (Low)” • P0262 “Injector #1-A (High)” • P0263 “Injector #1-A (Plausibility)” • P0264 “Injector #2-A (Low)” • P0265 “Injector #2-A (High)” • P0266 “Injector #2-A (Plausibility)” • P0267 “Injector #3-A (Low)” • P0268 “Injector #3-A (High)” • P0269 “Injector #3-A (Plausibility)” • P0270 “Injector #4-A (Low)” • P0271 “Injector #4-A (High)” • P0272 “Injector #4-A (Plausibility)” • P0562 “Power Supply Voltage (Low)” • P0563 “Power Supply Voltage (High)” • P0607 “ECU System” • P060B “A/D Converter” • P061B “ECU Performance (Calc)” • P061C “ECU Performance (Ne)”
	Inspection condition		• Starter switch: ON • Do not start engine
	Requirements		No codes occur.
	Inspection result (Is the judging standard satisfied?)	YES	Go to step 2.
		NO	Inspect diagnosis code that is occurring.

Step 2	Inspection items		Checking of engine appearance
	Maintenance item		Check fuel system for fuel leak.
	Inspection condition		Starter switch: OFF
	Requirements		There is no fuel leak.
	Inspection result (Is the judging standard satisfied?)	YES	Go to step 3.
		NO	Go to step 6.

Step 3	Inspection items		Inspection of low pressure piping (fuel tank – supply pump)
	Maintenance item		Check suction pipe or hose for bend.
	Inspection condition		Starter switch: OFF
	Requirements		There is no bend on pipe or hose.
	Inspection result (Is the judging standard satisfied?)	YES	Go to step 4.
		NO	Correct and replace suction pipe or hose.

Step 4	Inspection items		Checking of air bleeding
	Maintenance item		Bleed air from fuel filter.
	Inspection condition		Starter switch: OFF
	Requirements		Problem is solved by bleeding air.
	Inspection result (Is the judging standard satisfied?)	YES	–
		NO	Go to step 5.

Step 5	Inspection items		Inspection of low pressure piping
	Maintenance item		Fuel filter
	Inspection condition		Starter switch: OFF
	Requirements		Problem is solved by replacing fuel filter.
	Inspection result (Is the judging standard satisfied?)	YES	–
		NO	Go to step 6.

Step 6	Inspection items		Inspection by control data
	Maintenance item		Perform actuator test item No. B2 “Fuel Leak Check”.
	Inspection condition		Engine start: At idle
	Requirements		There is no leak from supply pump.
	Inspection result (Is the judging standard satisfied?)	YES	Go to step 7.
		NO	Replacement of supply pump

Step 7	Inspection items		Inspection by control data
	Maintenance item		Perform actuator test item No. B2 “Fuel Leak Check”.
	Inspection condition		Engine start: At idle
	Requirements		There is no leak from fuel pipe between supply pump and rail.
	Inspection result (Is the judging standard satisfied?)	YES	Go to step 8.
		NO	Replacement of fuel pipe

Step 8	Inspection items		Inspection by control data
	Maintenance item		Perform actuator test item No. B2 “Fuel Leak Check”.
	Inspection condition		Engine start: At idle
	Requirements		There is no leak from rail.
	Inspection result (Is the judging standard satisfied?)	YES	Go to step 9.
		NO	Replacement of rail

Step 9	Inspection items		Inspection by control data
	Maintenance item		Perform actuator test item No. B2 “Fuel Leak Check”.
	Inspection condition		Engine start: At idle
	Requirements		There is no leak from fuel injection pipes (four) between injector and rail.
	Inspection result (Is the judging standard satisfied?)	YES	Go to step 10.
		NO	Replacement of injection pipe

Step 10	Inspection items		Inspection by control data
	Maintenance item		Perform actuator test item No. B2 “Fuel Leak Check”.
	Inspection condition		Engine start: At idle
	Requirements		There is no leak from injectors (four).
	Inspection result (Is the judging standard satisfied?)	YES	Go to step 11.
		NO	Replacement of injector

Step 11	Inspection items		Inside inspection of combustion chamber
	Maintenance item		Check for fuel leak.
	Inspection condition		• After performing actuator test item No. B2 “Fuel Leak Check”, stop engine. • Remove glow plug, and check from glow plug mounting hole using bore scope.
	Requirements		Inside of combustion chamber is not wet.
	Inspection result (Is the judging standard satisfied?)	YES	Go to step 12.
		NO	Replacement of injector of object cylinder

Step 12	Inspection items		Replacement of rail (flow damper and pressure limiter abnormal)
	Maintenance item		–
	Inspection condition		–
	Requirements		Problem is solved by replacing rail.
	Inspection result (Is the judging standard satisfied?)	YES	–
		NO	Go to step 13.

Step 13	Inspection items		Replacement of supply pump
	Maintenance item		–
	Inspection condition		–
	Requirements		Problem is solved by replacing supply pump.
	Inspection result (Is the judging standard satisfied?)	YES	–
		NO	Replacement of injectors (four)

[Fault code]
Diagnosis code: U0001/Flash code: 73
[Monitor]
Abnormality in controller area network 2 communication
[Fault (outline)]
Message timeout
[Diagnosis check]
- Controller area network communication between engine electronic control unit and each electronic drive unit (turbocharger, exhaust gas recirculation, throttle) is monitored for abnormality.

[Code generation condition]
- No controller area network signal is sent from each electronic drive unit within specified time after engine start (time out).
  (Warning lamp is lit and diagnosis code is displayed on third establishment of code generation condition.)

[Diagnosis check timing]
- Fault diagnosis is continuously performed during the driving cycle.

[Diagnostic requirement]
- When engine is in normal condition during period from after-run to start.

[Control effected by electronic control unit during fault]
- Related fault check is stopped.

[Probable cause of trouble]
- Open-circuit or short-circuit of harness between engine electronic control unit and each electronic drive unit (turbocharger, exhaust gas recirculation, throttle)
- Malfunction of each connector
- Malfunction of engine electronic control unit
- Malfunction of each electronic drive unit

[Recoverability]
- Recovered if signal becomes normal when starter switch is turned OFF to ON (power supply resumed to electronic control unit).
  (Warning lamp is extinguished and diagnosis code is cleared at fourth display of diagnosis code after recovery.)

[Electronic Control Unit Connection Diagram]

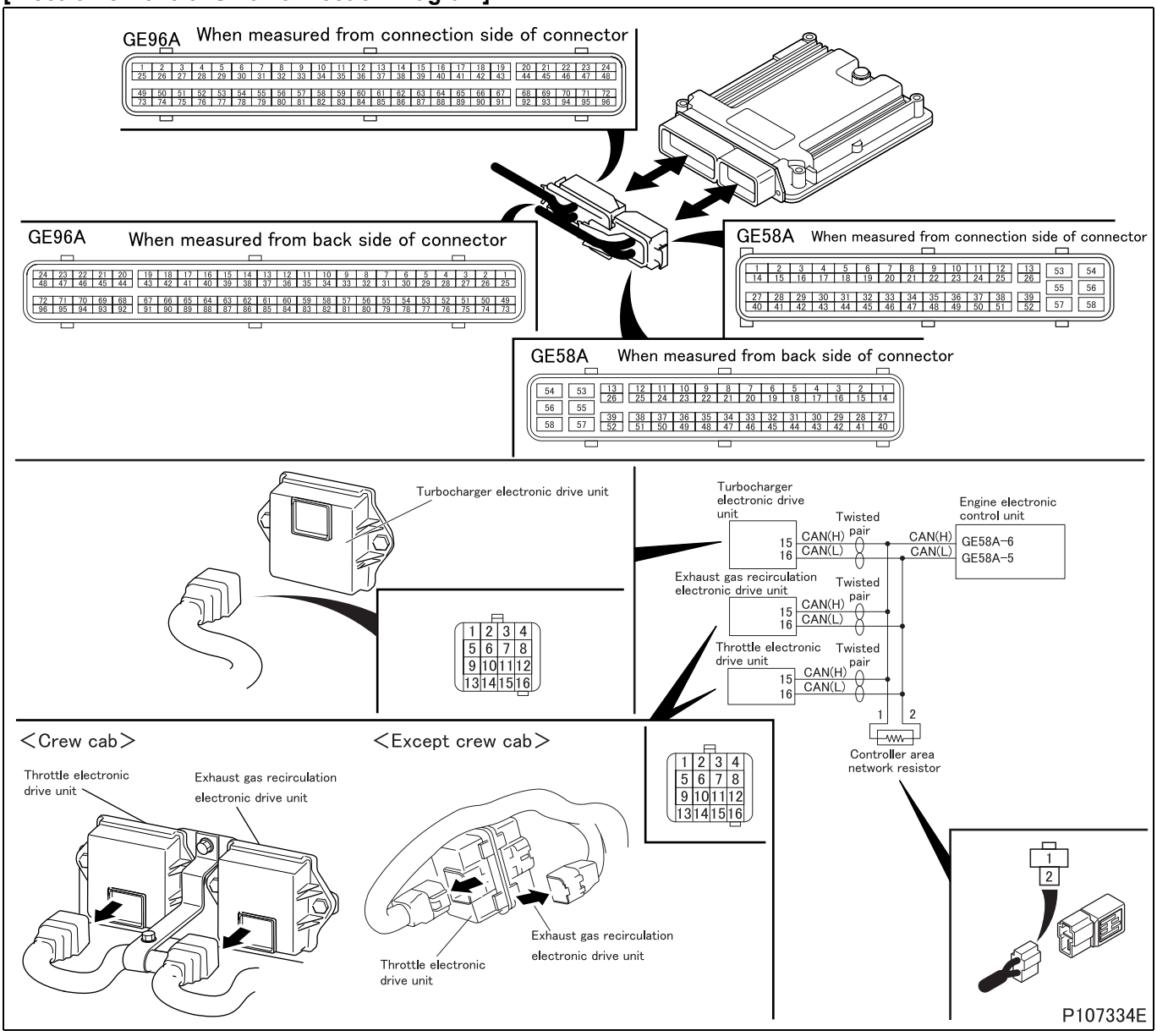

[Parts Identification and Location]

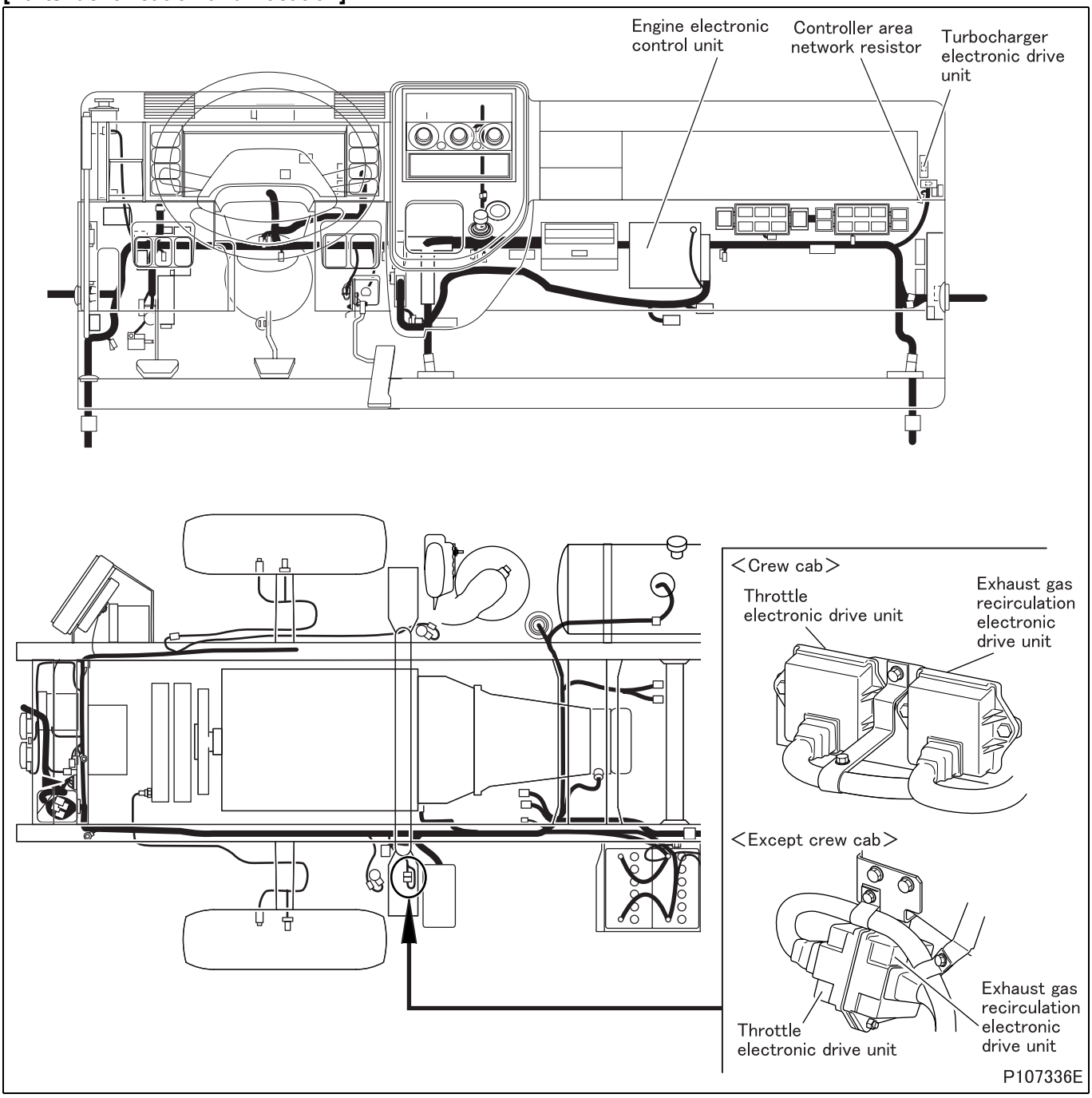

[Fault diagnosis]

- Perform checks in the sequence of the following steps.

Step 1	Inspection items		Inspection by engine electronic control unit connector
	Maintenance item		Measure value of resistance between engine electronic control unit connector (GE58A) terminal No. 5 and 6.
	Inspection condition		Disconnect each device from harness and measure from connection side of harness connector.
	Requirements		120 ± 6 Ω
	Inspection result (Is the judging standard satisfied?)	YES	Go to step 7.
		NO	Go to step 2.

Step 2	Inspection items		Inspection of controller area network resistor connector
	Maintenance item		Inspection of connector
	Inspection condition		–
	Requirements		• Connector is properly connected. • No trace of water entry is found. • No corrosion is found in terminal. • Connection to terminal is appropriate.
	Inspection result (Is the judging standard satisfied?)	YES	Go to step 3.
		NO	Modify connector.

Step 3	Inspection items		Inspection of controller area network resistor unit
	Maintenance item		Measure value of resistance between connector terminal No. 1 and No. 2.
	Inspection condition		Disconnect connector and measure resistor side.
	Requirements		120 ± 6 Ω
	Inspection result (Is the judging standard satisfied?)	YES	Go to step 4.
		NO	Replacement of controller area network resistor

<Step 3 inspection diagram>

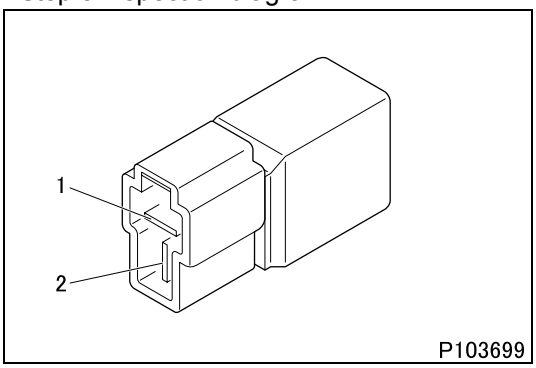

Step 4	Inspection items		Inspection of harness between engine electronic control unit and controller area network resistor (HIGH)
	Maintenance item		Check circuit between controller area network resistor connector terminal No. 1 and engine electronic control unit connector (GE58A) terminal No. 6
	Inspection condition		Disconnect each device from harness and measure from connection side of harness connector.
	Requirements		There is continuity.
	Inspection result (Is the judging standard satisfied?)	YES	Go to step 5.
		NO	Modify harness.

Step 5	Inspection items		Inspection of harness between engine electronic control unit and controller area network resistor (LOW)
	Maintenance item		Check circuit between controller area network resistor connector terminal No. 2 and engine electronic control unit connector (GE58A) terminal No. 5.
	Inspection condition		Disconnect each device from harness and measure from connection side of harness connector.
	Requirements		There is continuity.
	Inspection result (Is the judging standard satisfied?)	YES	Go to step 6.
		NO	Modify harness.

Step 6	Inspection items		Inspection of engine electronic control unit connector
	Maintenance item		Inspection of connector
	Inspection condition		–
	Requirements		• Connector is properly connected. • No trace of water entry is found. • No corrosion is found in terminal. • Connection to terminal is appropriate.
	Inspection result (Is the judging standard satisfied?)	YES	Go to step 10.
		NO	Modify connector.

Step 7	Inspection items		Inspection of harness between exhaust gas recirculation electronic drive unit and controller area network resistor (HIGH)
	Maintenance item		Check circuit between controller area network resistor connector terminal No. 1 and exhaust gas recirculation electronic drive unit connector terminal No. 15.
	Inspection condition		Disconnect each device from harness and measure from connection side of harness connector.
	Requirements		There is continuity.
	Inspection result (Is the judging standard satisfied?)	YES	Go to step 8.
		NO	Modify harness.

Step 8	Inspection items		Inspection of harness between exhaust gas recirculation electronic drive unit and controller area network resistor (LOW)
	Maintenance item		Check circuit between controller area network resistor connector terminal No. 2 and exhaust gas recirculation electronic drive unit connector terminal No. 16.
	Inspection condition		Disconnect each device from harness and measure from connection side of harness connector.
	Requirements		There is continuity.
	Inspection result (Is the judging standard satisfied?)	YES	Go to step 9.
		NO	Modify harness.

Step 9	Inspection items		Inspection of exhaust gas recirculation electronic drive unit connector
	Maintenance item		Inspection of connector
	Inspection condition		–
	Requirements		• Connector is properly connected. • No trace of water entry is found. • No corrosion is found in terminal. • Connection to terminal is appropriate.
	Inspection result (Is the judging standard satisfied?)	YES	Go to step 10.
		NO	Modify connector.

Step 10	Inspection items		Inspection of harness between throttle electronic drive unit and controller area network resistor (HIGH)
	Maintenance item		Check circuit between controller area network resistor connector terminal No. 1 and throttle electronic drive unit connector terminal No. 15.
	Inspection condition		Disconnect each device from harness and measure from connection side of harness connector.
	Requirements		There is continuity.
	Inspection result (Is the judging standard satisfied?)	YES	Go to step 11.
		NO	Modify harness.

Step 11	Inspection items		Inspection of harness between throttle electronic drive unit and controller area network resistor (LOW)
	Maintenance item		Check circuit between controller area network resistor connector terminal No. 2 and throttle electronic drive unit connector terminal No. 16.
	Inspection condition		Disconnect each device from harness and measure from connection side of harness connector.
	Requirements		There is continuity.
	Inspection result (Is the judging standard satisfied?)	YES	Go to step 12.
		NO	Modify harness.

Step 12	Inspection items		Inspection of throttle electronic drive unit connector
	Maintenance item		Inspection of connector
	Inspection condition		–
	Requirements		• Connector is properly connected. • No trace of water entry is found. • No corrosion is found in terminal. • Connection to terminal is appropriate.
	Inspection result (Is the judging standard satisfied?)	YES	Go to step 13.
		NO	Modify connector.

Step 13	Inspection items		Inspection of harness between turbocharger electronic drive unit and controller area network resistor (HIGH)
	Maintenance item		Check circuit between controller area network resistor connector terminal No. 1 and turbocharger electronic drive unit connector terminal No. 15.
	Inspection condition		Disconnect each device from harness and measure from connection side of harness connector.
	Requirements		There is continuity.
	Inspection result (Is the judging standard satisfied?)	YES	Go to step 14.
		NO	Modify harness.

Step 14	Inspection items		Inspection of harness between turbocharger electronic drive unit and controller area network resistor (LOW)
	Maintenance item		Check circuit between controller area network resistor connector terminal No. 2 and turbocharger electronic drive unit connector terminal No. 16.
	Inspection condition		Disconnect each device from harness and measure from connection side of harness connector.
	Requirements		There is continuity.
	Inspection result (Is the judging standard satisfied?)	YES	Go to step 15.
		NO	Modify harness.

Step 15	Inspection items		Inspection of turbocharger electronic drive unit connector
	Maintenance item		Inspection of connector
	Inspection condition		–
	Requirements		• Connector is properly connected. • No trace of water entry is found. • No corrosion is found in terminal. • Connection to terminal is appropriate.
	Inspection result (Is the judging standard satisfied?)	YES	Replace the engine electronic control unit as well if this diagnosis code occurs after the replacement of one of electronic drive units.
		NO	Modify connector.

[Fault code]
Diagnosis code: U0002/Flash code: 73
[Monitor]
Abnormality in controller area network 2 communication
[Fault (outline)]
Controller area network B bus off
[Diagnosis check]
- Controller area network communication between engine electronic control unit and each electronic drive unit (turbocharger, exhaust gas recirculation, throttle) is monitored for abnormality.

[Code generation condition]
- No controller area network signal is received from each electronic drive unit after engine start (controller area network bus OFF).
  (Warning lamp is lit and diagnosis code is displayed on third establishment of code generation condition.)

[Diagnosis check timing]
- Fault diagnosis is continuously performed during the driving cycle.

[Diagnostic requirement]
–

[Control effected by electronic control unit during fault]
- Exhaust gas recirculation control is stopped.
- Throttle controls disabled
- Post injection is inhibited.
- Diesel particulate filter regeneration is stopped.
- Particulate matter deposit computation is stopped.
- Related fault check is stopped.

[Probable cause of trouble]
- Open-circuit or short-circuit of harness between engine electronic control unit and each electronic drive unit (turbocharger, exhaust gas recirculation, throttle)
- Malfunction of each connector
- Malfunction of engine electronic control unit
- Malfunction of each electronic drive unit

[Recoverability]
- Recovered if signal becomes normal when starter switch is turned OFF to ON (power supply resumed to electronic control unit).
  (Warning lamp is extinguished and diagnosis code is cleared at fourth display of diagnosis code after recovery.)

[Electronic Control Unit Connection Diagram]

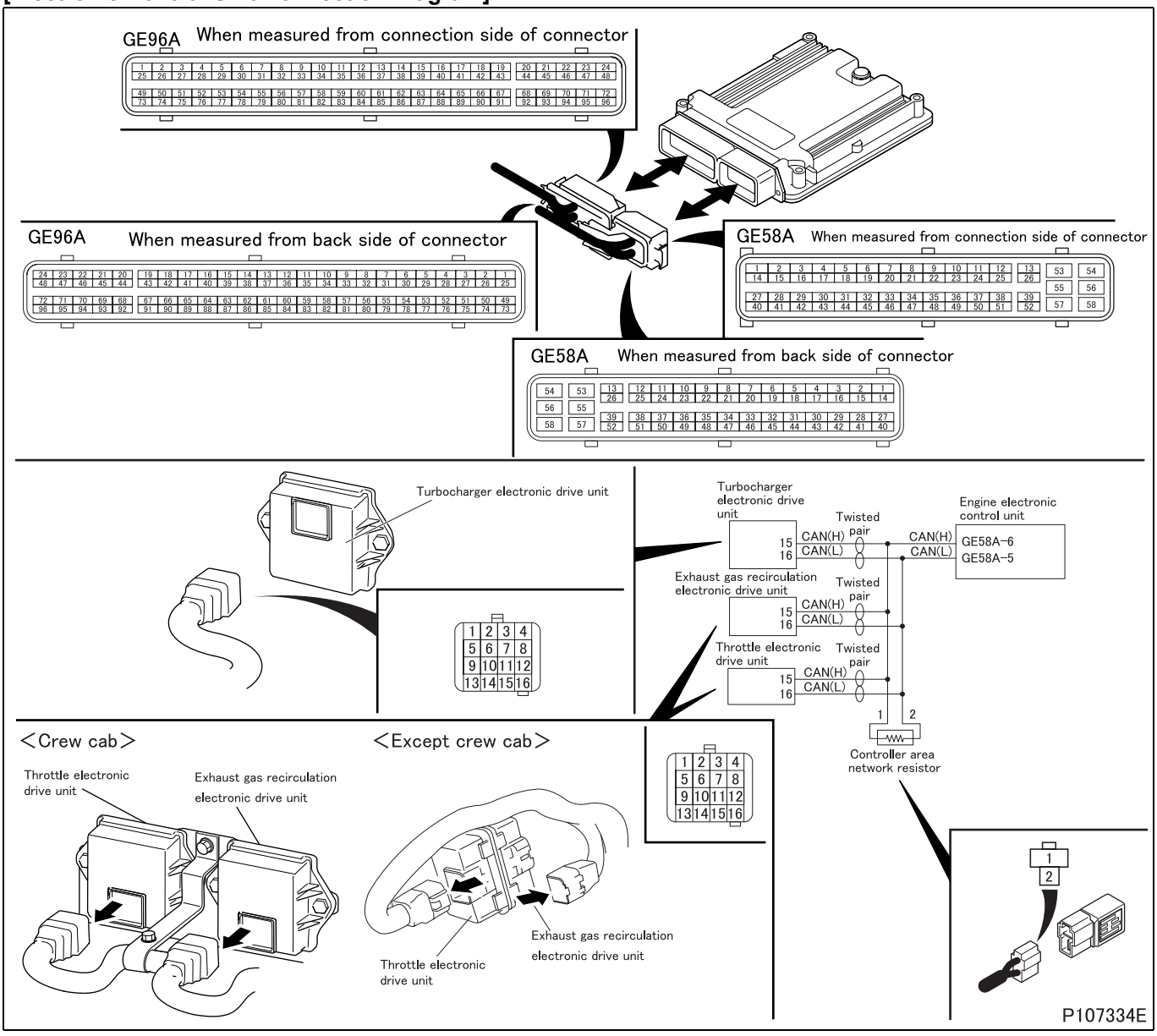

[Parts Identification and Location]

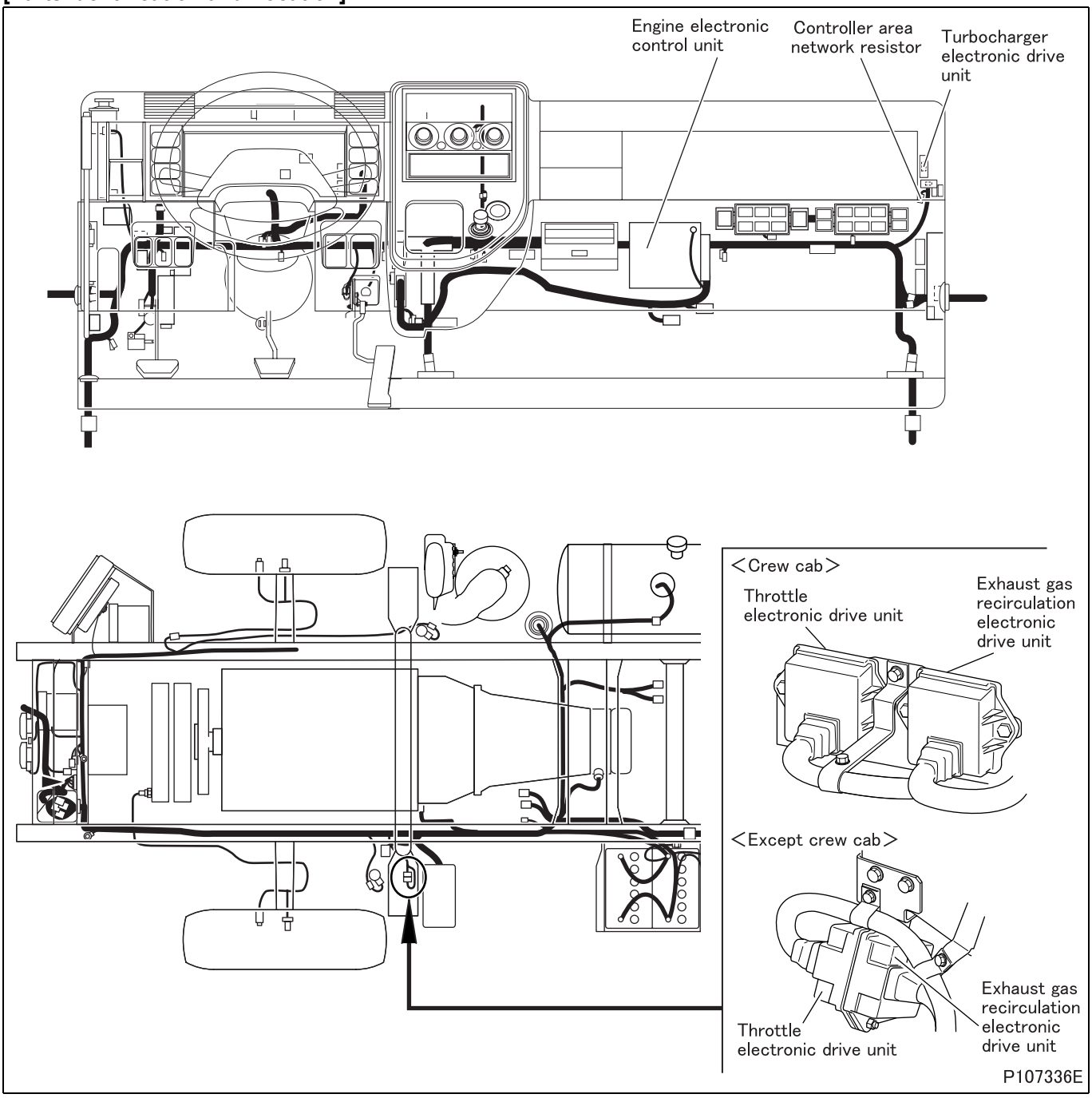

[Fault diagnosis]

- Perform checks in the sequence of the following steps.

Step 1	Inspection items		Inspection by engine electronic control unit connector
	Maintenance item		Measure value of resistance between engine electronic control unit connector (GE58A) terminal No. 5 and 6.
	Inspection condition		Disconnect each device from harness and measure from connection side of harness connector.
	Requirements		120 ± 6 Ω
	Inspection result (Is the judging standard satisfied?)	YES	Go to step 7.
		NO	Go to step 2.

Step 2	Inspection items		Inspection of controller area network resistor connector
	Maintenance item		Inspection of connector
	Inspection condition		–
	Requirements		• Connector is properly connected. • No trace of water entry is found. • No corrosion is found in terminal. • Connection to terminal is appropriate.
	Inspection result (Is the judging standard satisfied?)	YES	Go to step 3.
		NO	Modify connector.

Step 3	Inspection items		Inspection of controller area network resistor unit
	Maintenance item		Measure value of resistance between connector terminal No. 1 and No. 2.
	Inspection condition		Disconnect connector and measure resistor side.
	Requirements		120 ± 6 Ω
	Inspection result (Is the judging standard satisfied?)	YES	Go to step 4.
		NO	Replacement of controller area network resistor

<Step 3 inspection diagram>

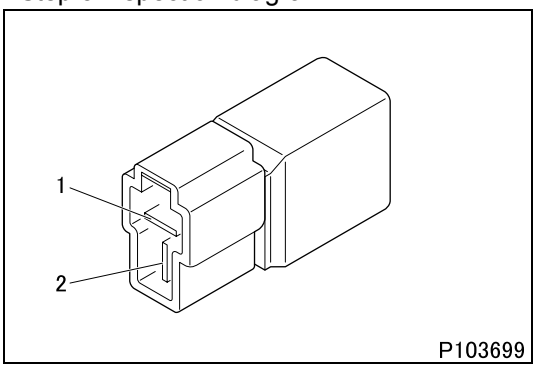

Step 4	Inspection items		Inspection of harness between engine electronic control unit and controller area network resistor (HIGH)
	Maintenance item		Check circuit between controller area network resistor connector terminal No. 1 and engine electronic control unit connector (GE58A) terminal No. 6.
	Inspection condition		Disconnect each device from harness and measure from connection side of harness connector.
	Requirements		There is continuity.
	Inspection result (Is the judging standard satisfied?)	YES	Go to step 5.
		NO	Modify harness.

Step 5	Inspection items		Inspection of harness between engine electronic control unit and controller area network resistor (LOW)
	Maintenance item		Check circuit between controller area network resistor connector terminal No. 2 and engine electronic control unit connector (GE58A) terminal No. 5.
	Inspection condition		Disconnect each device from harness and measure from connection side of harness connector.
	Requirements		There is continuity.
	Inspection result (Is the judging standard satisfied?)	YES	Go to step 6.
		NO	Modify harness.

Step 6	Inspection items		Inspection of engine electronic control unit connector
	Maintenance item		Inspection of connector
	Inspection condition		–
	Requirements		• Connector is properly connected. • No trace of water entry is found. • No corrosion is found in terminal. • Connection to terminal is appropriate.
	Inspection result (Is the judging standard satisfied?)	YES	Go to step 10.
		NO	Modify connector.

Step 7	Inspection items		Inspection of harness between exhaust gas recirculation electronic drive unit and controller area network resistor (HIGH)
	Maintenance item		Check circuit between controller area network resistor connector terminal No. 1 and exhaust gas recirculation electronic drive unit connector terminal No. 15.
	Inspection condition		Disconnect each device from harness and measure from connection side of harness connector.
	Requirements		There is continuity.
	Inspection result (Is the judging standard satisfied?)	YES	Go to step 8.
		NO	Modify harness.

Step 8	Inspection items		Inspection of harness between exhaust gas recirculation electronic drive unit and controller area network resistor (LOW)
	Maintenance item		Check circuit between controller area network resistor connector terminal No. 2 and exhaust gas recirculation electronic drive unit connector terminal No. 16.
	Inspection condition		Disconnect each device from harness and measure from connection side of harness connector.
	Requirements		There is continuity.
	Inspection result (Is the judging standard satisfied?)	YES	Go to step 9.
		NO	Modify harness.

Step 9	Inspection items		Inspection of exhaust gas recirculation electronic drive unit connector
	Maintenance item		Inspection of connector
	Inspection condition		–
	Requirements		• Connector is properly connected. • No trace of water entry is found. • No corrosion is found in terminal. • Connection to terminal is appropriate.
	Inspection result (Is the judging standard satisfied?)	YES	Go to step 10.
		NO	Modify connector.

Step 10	Inspection items		Inspection of harness between throttle electronic drive unit and controller area network resistor (HIGH)
	Maintenance item		Check circuit between controller area network resistor connector terminal No. 1 and throttle electronic drive unit connector terminal No. 15.
	Inspection condition		Disconnect each device from harness and measure from connection side of harness connector.
	Requirements		There is continuity.
	Inspection result (Is the judging standard satisfied?)	YES	Go to step 11.
		NO	Modify harness.

Step 11	Inspection items		Inspection of harness between throttle electronic drive unit and controller area network resistor (LOW)
	Maintenance item		Check circuit between controller area network resistor connector terminal No. 2 and throttle electronic drive unit connector terminal No. 16.
	Inspection condition		Disconnect each device from harness and measure from connection side of harness connector.
	Requirements		There is continuity.
	Inspection result (Is the judging standard satisfied?)	YES	Go to step 12.
		NO	Modify harness.

Step 12	Inspection items		Inspection of throttle electronic drive unit connector
	Maintenance item		Inspection of connector
	Inspection condition		–
	Requirements		• Connector is properly connected. • No trace of water entry is found. • No corrosion is found in terminal. • Connection to terminal is appropriate.
	Inspection result (Is the judging standard satisfied?)	YES	Go to step 13.
		NO	Modify connector.

Step 13	Inspection items		Inspection of harness between turbocharger electronic drive unit and controller area network resistor (HIGH)
	Maintenance item		Check circuit between controller area network resistor connector terminal No. 1 and turbocharger electronic drive unit connector terminal No. 15.
	Inspection condition		Disconnect each device from harness and measure from connection side of harness connector.
	Requirements		There is continuity.
	Inspection result (Is the judging standard satisfied?)	YES	Go to step 14.
		NO	Modify harness.

Step 14	Inspection items		Inspection of harness between turbocharger electronic drive unit and controller area network resistor (LOW)
	Maintenance item		Check circuit between controller area network resistor connector terminal No. 2 and turbocharger electronic drive unit connector terminal No. 16.
	Inspection condition		Disconnect each device from harness and measure from connection side of harness connector.
	Requirements		There is continuity.
	Inspection result (Is the judging standard satisfied?)	YES	Go to step 15.
		NO	Modify harness.

Step 15	Inspection items		Inspection of turbocharger electronic drive unit connector
	Maintenance item		Inspection of connector
	Inspection condition		–
	Requirements		• Connector is properly connected. • No trace of water entry is found. • No corrosion is found in terminal. • Connection to terminal is appropriate.
	Inspection result (Is the judging standard satisfied?)	YES	Replace the engine electronic control unit as well if this diagnosis code occurs after the replacement of one of electronic drive units.
		NO	Modify connector.

[Fault code]
Diagnosis code: U0028/Flash code: 72
[Monitor]
Abnormality in controller area network 1 communication
[Fault (outline)]
Message timeout
[Diagnosis check]
- Controller area network communication between engine electronic control unit and each electronic control unit (automatic transmission, multifunction vehicle control unit) is monitored for abnormality.

[Code generation condition]
- No controller area network signal is sent from each electronic control unit within specified time after engine start (time out).
  (Warning lamp is lit and diagnosis code is displayed on third establishment of code generation condition.)

[Diagnosis check timing]
- Fault diagnosis is continuously performed during the driving cycle.

[Diagnostic requirement]
- When engine is in normal condition during period from after-run to start.

[Control effected by electronic control unit during fault]
- Effects no special control.

[Probable cause of trouble]
- Open-circuit or short-circuit of harness between engine electronic control unit and each electronic control unit (automatic transmission, multifunction vehicle control unit)
- Malfunction of each connector
- Malfunction of engine electronic control unit
- Malfunction of each electronic control unit

[Recoverability]
- Recovered if signal becomes normal when starter switch is turned OFF to ON (power supply resumed to electronic control unit).
  (Warning lamp is extinguished and diagnosis code is cleared at fourth display of diagnosis code after recovery.)

[Electronic Control Unit Connection Diagram]

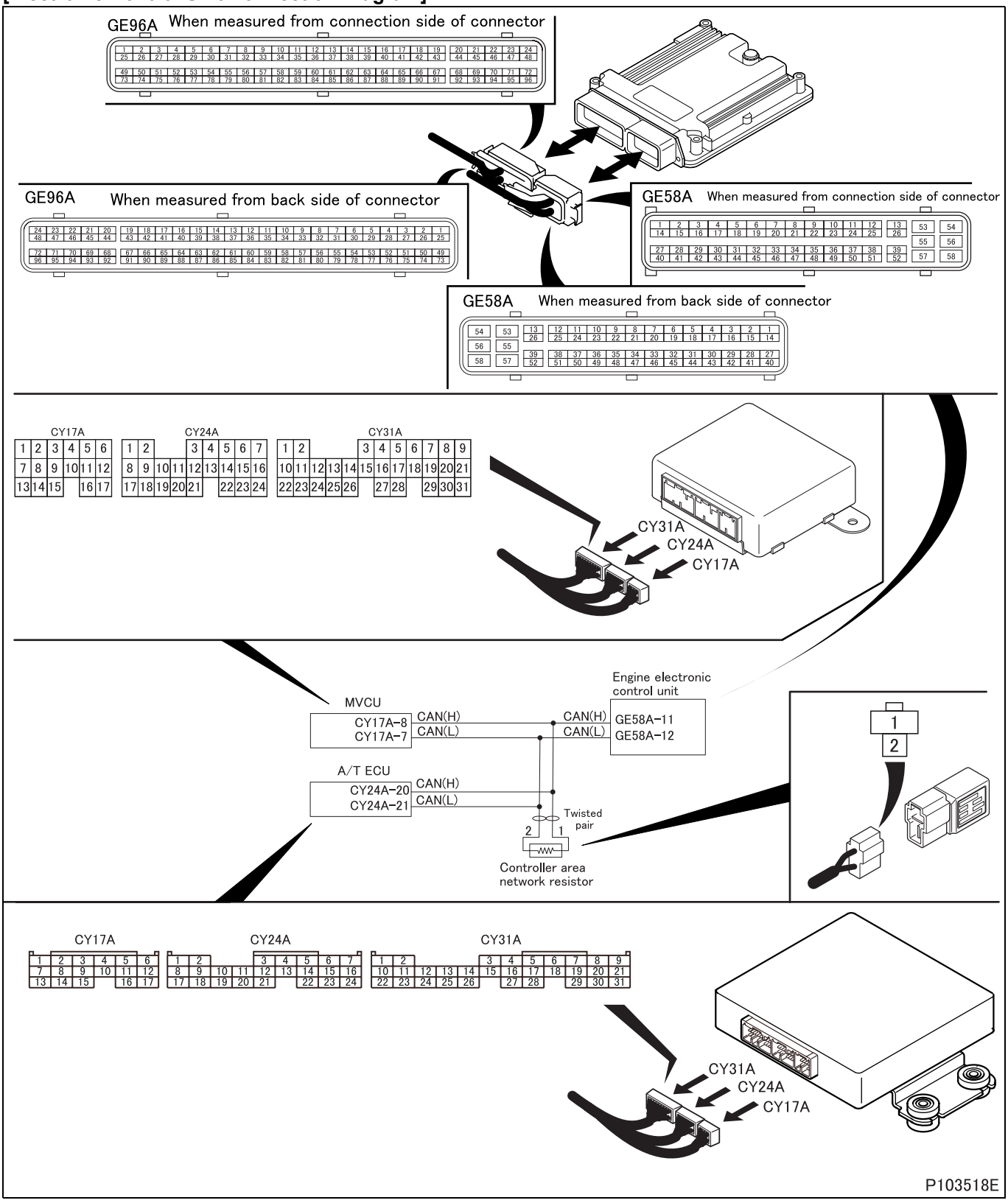

[Parts Identification and Location]

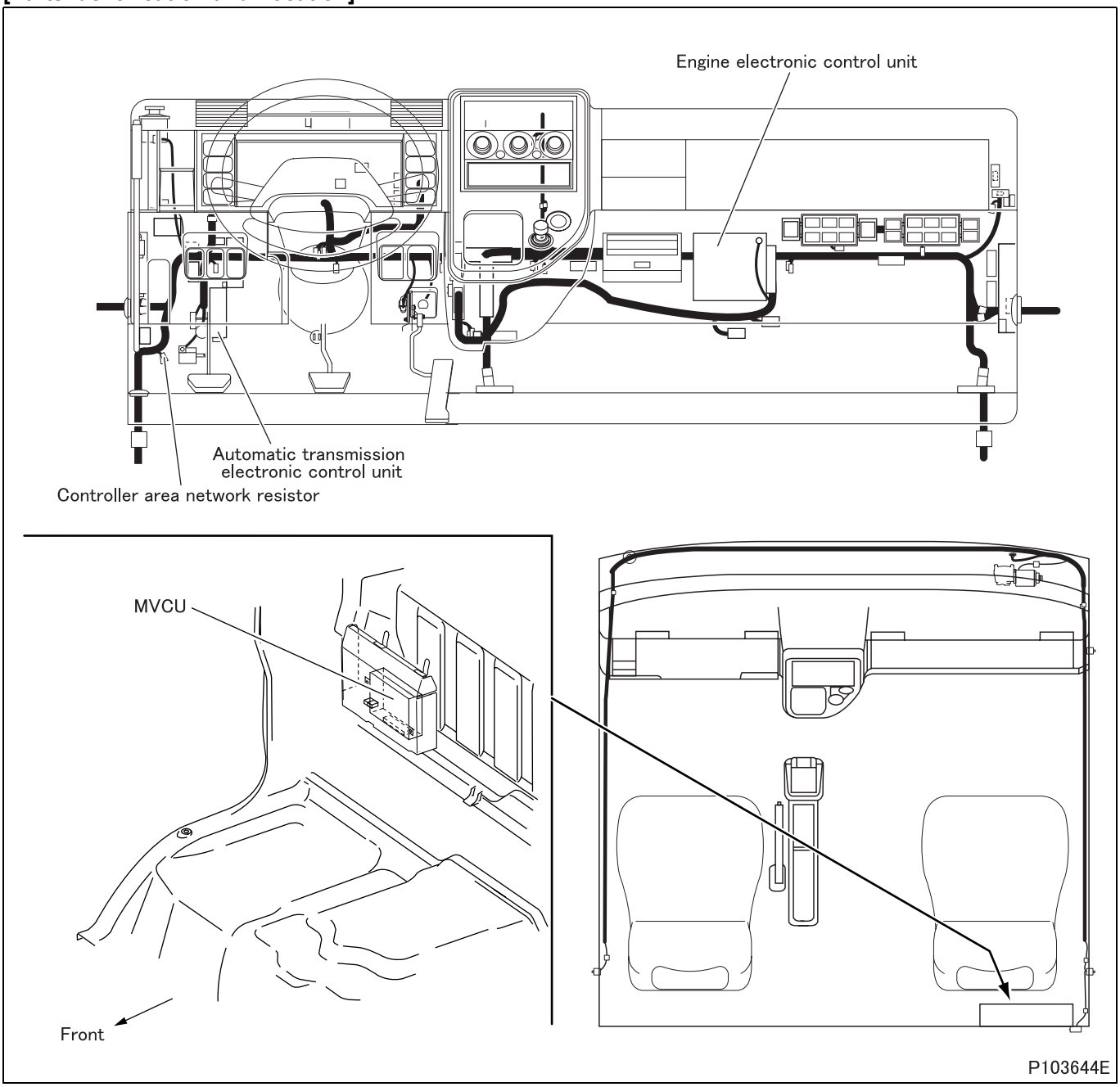

[Fault diagnosis]

- Perform checks in the sequence of the following steps.

Step 1	Inspection items		Inspection by engine electronic control unit connector
	Maintenance item		Measure value of resistance between engine electronic control unit connector (GE58A) terminal No. 11 and 12.
	Inspection condition		Disconnect each device from harness and measure from connection side of harness connector.
	Requirements		120 ± 6 Ω
	Inspection result (Is the judging standard satisfied?)	YES	Go to step 7.
		NO	Go to step 2.

Step 2	Inspection items		Inspection of controller area network resistor connector
	Maintenance item		Inspection of connector
	Inspection condition		–
	Requirements		• Connector is properly connected. • No trace of water entry is found. • No corrosion is found in terminal. • Connection to terminal is appropriate.
	Inspection result (Is the judging standard satisfied?)	YES	Go to step 3.
		NO	Modify connector.

Step 3	Inspection items		Inspection of controller area network resistor unit
	Maintenance item		Measure value of resistance between connector terminal No. 1 and No. 2.
	Inspection condition		Disconnect connector and measure resistor side.
	Requirements		120 ± 6 Ω
	Inspection result (Is the judging standard satisfied?)	YES	Go to step 4.
		NO	Replacement of controller area network resistor

<Step 3 inspection diagram>

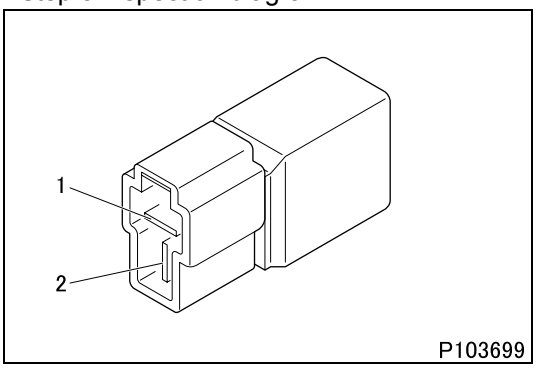

Step 4	Inspection items		Inspection of harness between engine electronic control unit and controller area network resistor (HIGH)
	Maintenance item		Check circuit between controller area network resistor connector terminal No. 1 and engine electronic control unit connector (GE58A) terminal No. 11.
	Inspection condition		Disconnect each device from harness and measure from connection side of harness connector.
	Requirements		There is continuity.
	Inspection result (Is the judging standard satisfied?)	YES	Go to step 5.
		NO	Modify harness.

Step 5	Inspection items		Inspection of harness between engine electronic control unit and controller area network resistor (LOW)
	Maintenance item		Check circuit between controller area network resistor connector terminal No. 2 and engine electronic control unit connector (GE58A) terminal No. 12.
	Inspection condition		Disconnect each device from harness and measure from connection side of harness connector.
	Requirements		There is continuity.
	Inspection result (Is the judging standard satisfied?)	YES	Go to step 6.
		NO	Modify harness.

Step 6	Inspection items		Inspection of engine electronic control unit connector
	Maintenance item		Inspection of connector
	Inspection condition		–
	Requirements		• Connector is properly connected. • No trace of water entry is found. • No corrosion is found in terminal. • Connection to terminal is appropriate.
	Inspection result (Is the judging standard satisfied?)	YES	Go to step 10.
		NO	Modify connector.

Step 7	Inspection items		Inspection of harness between multifunction vehicle control unit and controller area network resistor (HIGH)
	Maintenance item		Check circuit between controller area network resistor connector terminal No. 1 and multifunction vehicle control unit connector (CY17A) terminal No. 8.
	Inspection condition		Disconnect each device from harness and measure from connection side of harness connector.
	Requirements		There is continuity.
	Inspection result (Is the judging standard satisfied?)	YES	Go to step 8.
		NO	Modify harness.

Step 8	Inspection items		Inspection of harness between multifunction vehicle control unit and controller area network resistor (LOW)
	Maintenance item		Check circuit between controller area network resistor connector terminal No. 2 and multifunction vehicle control unit connector (CY17A) terminal No. 7.
	Inspection condition		Disconnect each device from harness and measure from connection side of harness connector.
	Requirements		There is continuity.
	Inspection result (Is the judging standard satisfied?)	YES	Go to step 9.
		NO	Modify harness.

Step 9	Inspection items		Inspection of multifunction vehicle control unit connector
	Maintenance item		Inspection of connector
	Inspection condition		–
	Requirements		• Connector is properly connected. • No trace of water entry is found. • No corrosion is found in terminal. • Connection to terminal is appropriate.
	Inspection result (Is the judging standard satisfied?)	YES	Go to step 10.
		NO	Modify connector.

Step 10	Inspection items		Inspection of harness between automatic transmission electronic control unit and controller area network resistor (HIGH)
	Maintenance item		Check circuit between controller area network resistor connector terminal No. 1 and automatic transmission electronic control unit connector (CY24A) terminal No. 20.
	Inspection condition		Disconnect each device from harness and measure from connection side of harness connector.
	Requirements		There is continuity.
	Inspection result (Is the judging standard satisfied?)	YES	Go to step 11.
		NO	Modify harness.

Step 11	Inspection items		Inspection of harness between throttle electronic drive unit and controller area network resistor (LOW)
	Maintenance item		Check circuit between controller area network resistor connector terminal No. 2 and automatic transmission electronic control unit connector (CY24A) terminal No. 21.
	Inspection condition		Disconnect each device from harness and measure from connection side of harness connector.
	Requirements		There is continuity.
	Inspection result (Is the judging standard satisfied?)	YES	Go to step 12.
		NO	Modify harness.

Step 12	Inspection items		Inspection of automatic transmission electronic control unit connector
	Maintenance item		Inspection of connector
	Inspection condition		–
	Requirements		• Connector is properly connected. • No trace of water entry is found. • No corrosion is found in terminal. • Connection to terminal is appropriate.
	Inspection result (Is the judging standard satisfied?)	YES	Replace the engine electronic control unit as well if this diagnosis code occurs after the replacement of either multifunction vehicle control unit or automatic transmission electronic control unit.
		NO	Modify connector.

[Fault code]
Diagnosis code: U0029/Flash code: 76
[Monitor]
Abnormality in controller area network 1 communication
[Fault (outline)]
Controller area network A bus off
[Diagnosis check]
- Controller area network communication between engine electronic control unit and each electronic control unit (automatic transmission, multifunction vehicle control unit) is monitored for abnormality.

[Code generation condition]
- No controller area network signal is received from each electronic control unit after engine start (controller area network bus OFF).
  (Warning lamp is lit and diagnosis code is displayed on third establishment of code generation condition.)

[Diagnosis check timing]
- Fault diagnosis is continuously performed during the driving cycle.

[Diagnostic requirement]
–

[Control effected by electronic control unit during fault]
- Auto cruise control stopped
- Speed limitation device control is stopped.
- Traction control is stopped. <Automatic transmission>

[Probable cause of trouble]
- Open-circuit or short-circuit of harness between engine electronic control unit and each electronic control unit (automatic transmission, multifunction vehicle control unit)
- Malfunction of each connector
- Malfunction of engine electronic control unit
- Malfunction of each electronic control unit

[Recoverability]
- Recovered if signal becomes normal when starter switch is turned OFF to ON (power supply resumed to electronic control unit).
  (Warning lamp is extinguished and diagnosis code is cleared at fourth display of diagnosis code after recovery.)

[Electronic Control Unit Connection Diagram]

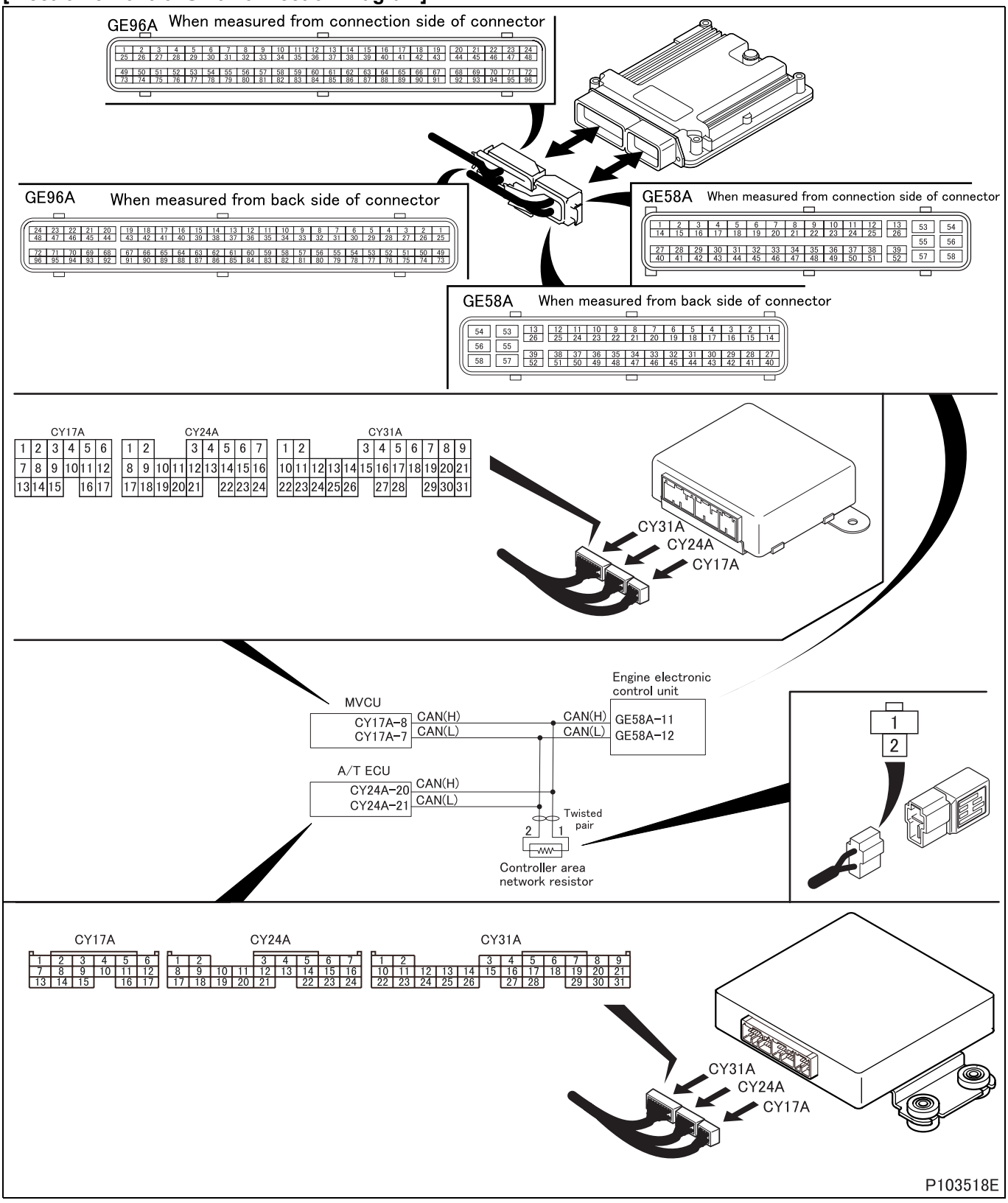

[Parts Identification and Location]

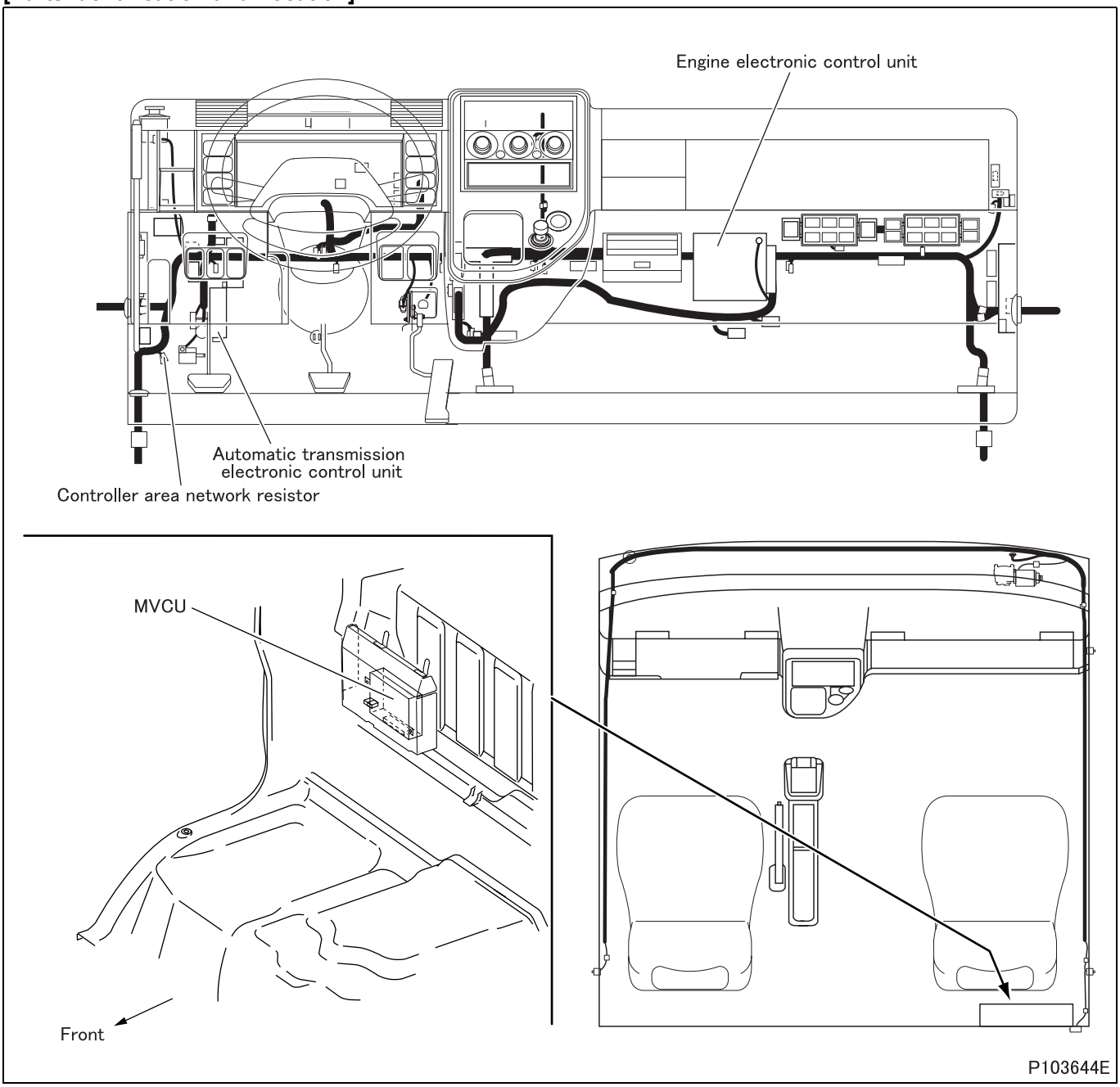

[Fault diagnosis]

- Perform checks in the sequence of the following steps.

Step 1	Inspection items		Inspection by engine electronic control unit connector
	Maintenance item		Measure value of resistance between engine electronic control unit connector (GE58A) terminal No. 11 and 12.
	Inspection condition		Disconnect each device from harness and measure from connection side of harness connector.
	Requirements		120 ± 6 Ω
	Inspection result (Is the judging standard satisfied?)	YES	Go to step 7.
		NO	Go to step 2.

Step 2	Inspection items		Inspection of controller area network resistor connector
	Maintenance item		Inspection of connector
	Inspection condition		–
	Requirements		• Connector is properly connected. • No trace of water entry is found. • No corrosion is found in terminal. • Connection to terminal is appropriate.
	Inspection result (Is the judging standard satisfied?)	YES	Go to step 3.
		NO	Modify connector.

Step 3	Inspection items		Inspection of controller area network resistor unit
	Maintenance item		Measure value of resistance between connector terminal No. 1 and No. 2.
	Inspection condition		Disconnect connector and measure resistor side.
	Requirements		120 ± 6 Ω
	Inspection result (Is the judging standard satisfied?)	YES	Go to step 4.
		NO	Replacement of controller area network resistor

<Step 3 inspection diagram>

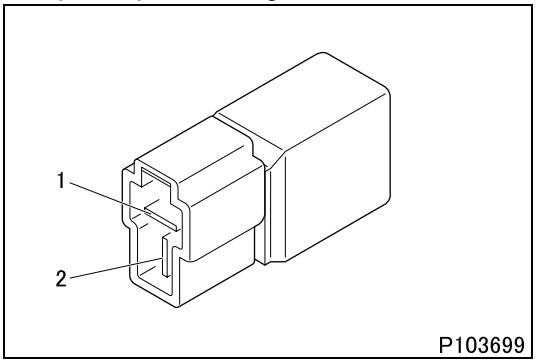

Step 4	Inspection items		Inspection of harness between engine electronic control unit and controller area network resistor (HIGH)
	Maintenance item		Check circuit between controller area network resistor connector terminal No. 1 and engine electronic control unit connector (GE58A) terminal No. 11.
	Inspection condition		Disconnect each device from harness and measure from connection side of harness connector.
	Requirements		There is continuity.
	Inspection result (Is the judging standard satisfied?)	YES	Go to step 5.
		NO	Modify harness.

Step 5	Inspection items		Inspection of harness between engine electronic control unit and controller area network resistor (LOW)
	Maintenance item		Check circuit between controller area network resistor connector terminal No. 2 and engine electronic control unit connector (GE58A) terminal No. 12.
	Inspection condition		Disconnect each device from harness and measure from connection side of harness connector.
	Requirements		There is continuity.
	Inspection result (Is the judging standard satisfied?)	YES	Go to step 6.
		NO	Modify harness.

Step 6	Inspection items		Inspection of engine electronic control unit connector
	Maintenance item		Inspection of connector
	Inspection condition		–
	Requirements		• Connector is properly connected. • No trace of water entry is found. • No corrosion is found in terminal. • Connection to terminal is appropriate.
	Inspection result (Is the judging standard satisfied?)	YES	Go to step 10.
		NO	Modify connector.

Step 7	Inspection items		Inspection of harness between multifunction vehicle control unit and controller area network resistor (HIGH)
	Maintenance item		Check circuit between controller area network resistor connector terminal No. 1 and multifunction vehicle control unit connector (CY17A) terminal No. 8.
	Inspection condition		Disconnect each device from harness and measure from connection side of harness connector.
	Requirements		There is continuity.
	Inspection result (Is the judging standard satisfied?)	YES	Go to step 8.
		NO	Modify harness.

Step 8	Inspection items		Inspection of harness between multifunction vehicle control unit and controller area network resistor (LOW)
	Maintenance item		Check circuit between controller area network resistor connector terminal No. 2 and multifunction vehicle control unit connector (CY17A) terminal No. 7.
	Inspection condition		Disconnect each device from harness and measure from connection side of harness connector.
	Requirements		There is continuity.
	Inspection result (Is the judging standard satisfied?)	YES	Go to step 9.
		NO	Modify harness.

Step 9	Inspection items		Inspection of multifunction vehicle control unit connector
	Maintenance item		Inspection of connector
	Inspection condition		–
	Requirements		• Connector is properly connected. • No trace of water entry is found. • No corrosion is found in terminal. • Connection to terminal is appropriate.
	Inspection result (Is the judging standard satisfied?)	YES	Go to step 10.
		NO	Modify connector.

Step 10	Inspection items		Inspection of harness between automatic transmission electronic control unit and controller area network resistor (HIGH)
	Maintenance item		Check circuit between controller area network resistor connector terminal No. 1 and automatic transmission electronic control unit connector (CY24A) terminal No. 20.
	Inspection condition		Disconnect each device from harness and measure from connection side of harness connector.
	Requirements		There is continuity.
	Inspection result (Is the judging standard satisfied?)	YES	Go to step 11.
		NO	Modify harness.

Step 11	Inspection items		Inspection of harness between throttle electronic drive unit and controller area network resistor (LOW)
	Maintenance item		Check circuit between controller area network resistor connector terminal No. 2 and automatic transmission electronic control unit connector (CY24A) terminal No. 21.
	Inspection condition		Disconnect each device from harness and measure from connection side of harness connector.
	Requirements		There is continuity.
	Inspection result (Is the judging standard satisfied?)	YES	Go to step 12.
		NO	Modify harness.

Step 12	Inspection items		Inspection of automatic transmission electronic control unit connector
	Maintenance item		Inspection of connector
	Inspection condition		–
	Requirements		• Connector is properly connected. • No trace of water entry is found. • No corrosion is found in terminal. • Connection to terminal is appropriate.
	Inspection result (Is the judging standard satisfied?)	YES	Replace the engine electronic control unit as well if this diagnosis code occurs after the replacement of either multifunction vehicle control unit or automatic transmission electronic control unit.
		NO	Modify connector.

[Fault code]
Diagnosis code: U0101/Flash code: 76
[Monitor]
Abnormality in controller area network (automatic transmission) communication
[Fault (outline)]
Engine warning lamp (orange) request message timeout
[Diagnosis check]
- Controller area network communication between engine electronic control unit and automatic transmission electronic control unit is monitored for abnormality.

[Code generation condition]
Diagnosis code is generated under either of the following conditions.
<Condition (1)>
- Engine electronic control unit fails to receive controller area network signal containing automatic transmission warning information from automatic transmission electronic control unit within specified time.
  (Diagnosis code is displayed on first establishment of code generation condition.)

<Condition (2)>
- Abnormality in controller area network communication in other cases than condition (1) above
  (Warning lamp (red) is lit and diagnosis code is displayed on third establishment of code generation condition.)

[Diagnosis check timing]
- Fault diagnosis is continuously performed during the driving cycle.

[Diagnostic requirement]
–

[Control effected by electronic control unit during fault]
Electronic control unit differs in the way of control by the diagnosis check item.
<Transmission gear position>
- Engine torque is limited.

<Engine speed>
- Traction control is stopped. <Automatic transmission>

<Automatic transmission warning lamp>
- Effects no special control.

[Probable cause of trouble]
- Open-circuit or short-circuit of harness between engine electronic control unit and automatic transmission electronic control unit
- Malfunction of each connector
- Malfunction of engine electronic control unit
- Malfunction of automatic transmission electronic control unit

[Recoverability]
- Recovered if signal becomes normal when starter switch is turned OFF to ON (power supply resumed to electronic control unit).
  (Timing of warning lamp/diagnosis code OFF depends on condition.)

<Condition (1)>
- Code is cleared simultaneously with recovery.

<Condition (2)>
- Lamp is extinguished and code is cleared at fourth diagnosis code display after recovery.

[Electronic Control Unit Connection Diagram]

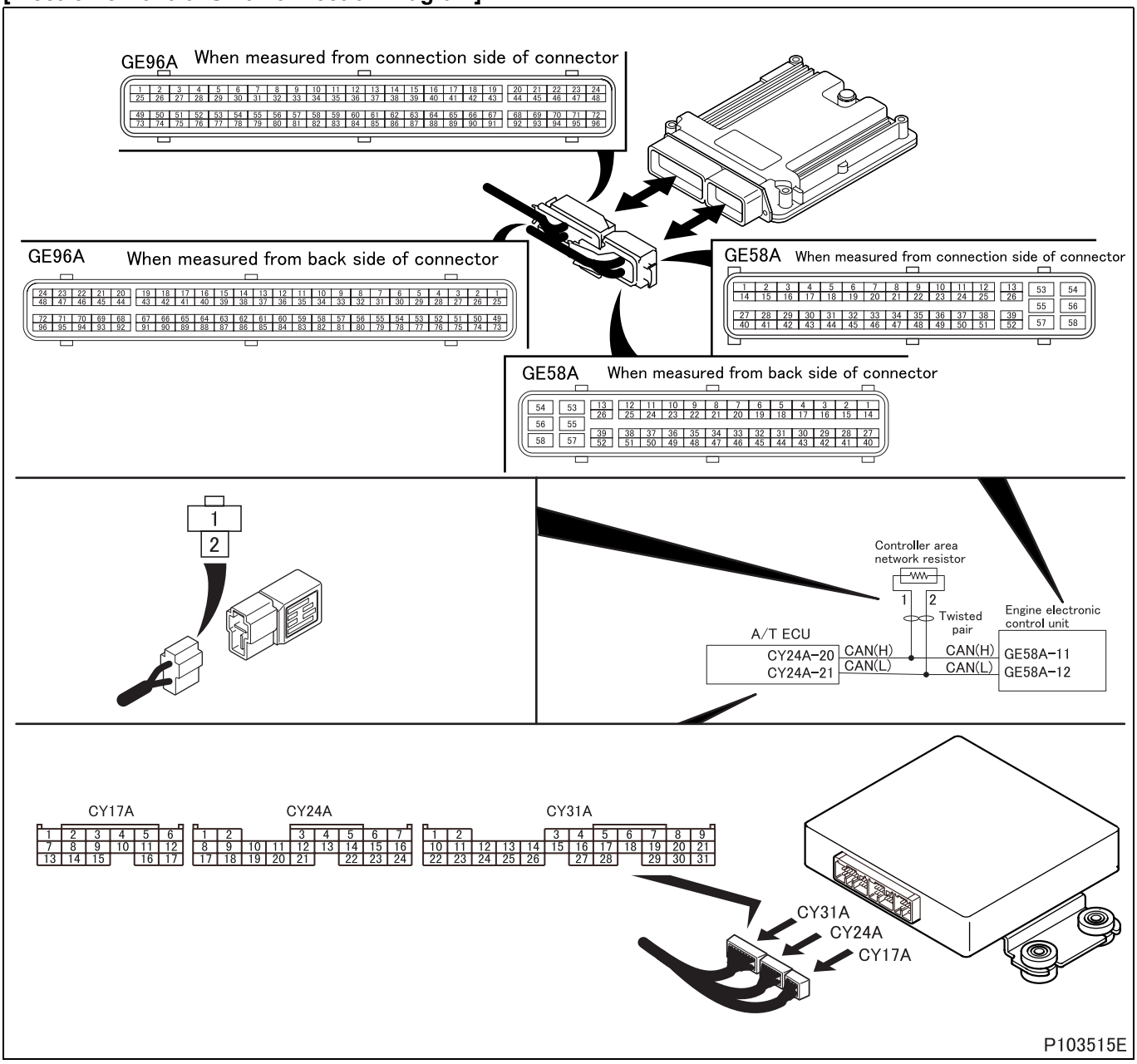

[Parts Identification and Location]

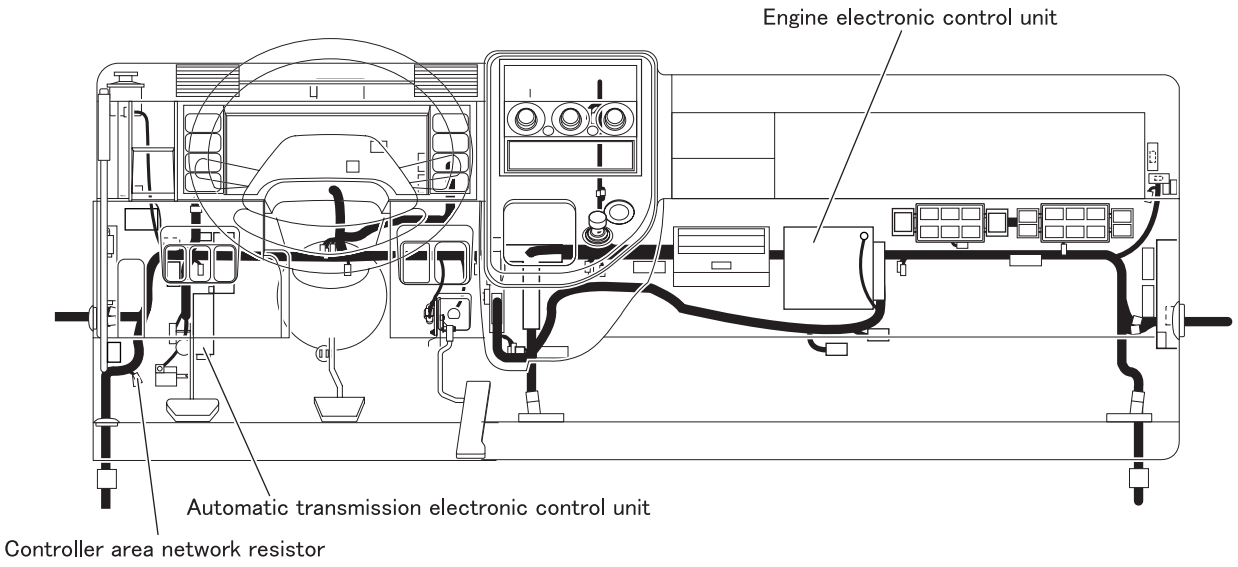

[Fault diagnosis]

- Perform checks in the sequence of the following steps.

Step 1	Inspection items		Inspection by engine electronic control unit connector
	Maintenance item		Measure value of resistance between engine electronic control unit connector (GE58A) terminal No. 11 and 12.
	Inspection condition		Disconnect each device from harness and measure from connection side of harness connector.
	Requirements		120 ± 6 Ω
	Inspection result (Is the judging standard satisfied?)	YES	Go to step 7.
		NO	Go to step 2.

Step 2	Inspection items		Inspection of controller area network resistor connector
	Maintenance item		Inspection of connector
	Inspection condition		–
	Requirements		• Connector is properly connected. • No trace of water entry is found. • No corrosion is found in terminal. • Connection to terminal is appropriate.
	Inspection result (Is the judging standard satisfied?)	YES	Go to step 3.
		NO	Modify connector.

Step 3	Inspection items		Inspection of controller area network resistor unit
	Maintenance item		Measure value of resistance between connector terminal No. 1 and No. 2.
	Inspection condition		Disconnect connector and measure resistor side.
	Requirements		120 ± 6 Ω
	Inspection result (Is the judging standard satisfied?)	YES	Go to step 4.
		NO	Replacement of controller area network resistor

<Step 3 inspection diagram>

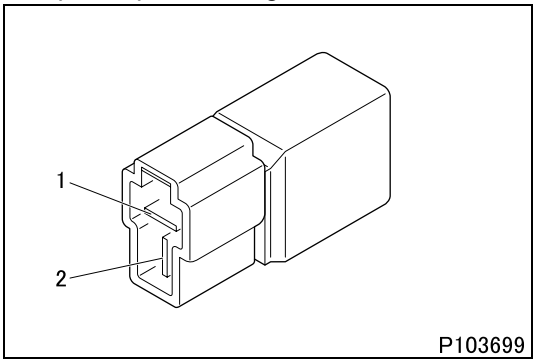

Step 4	Inspection items		Inspection of harness between engine electronic control unit and controller area network resistor (HIGH)
	Maintenance item		Check circuit between controller area network resistor connector terminal No. 1 and engine electronic control unit connector (GE58A) terminal No. 11.
	Inspection condition		Disconnect each device from harness and measure from connection side of harness connector.
	Requirements		There is continuity.
	Inspection result (Is the judging standard satisfied?)	YES	Go to step 5.
		NO	Modify harness.

Step 5	Inspection items		Inspection of harness between engine electronic control unit and controller area network resistor (LOW)
	Maintenance item		Check circuit between controller area network resistor connector terminal No. 2 and engine electronic control unit connector (GE58A) terminal No. 12.
	Inspection condition		Disconnect each device from harness and measure from connection side of harness connector.
	Requirements		There is continuity.
	Inspection result (Is the judging standard satisfied?)	YES	Go to step 6.
		NO	Modify harness.

Step 6	Inspection items		Inspection of engine electronic control unit connector
	Maintenance item		Inspection of connector
	Inspection condition		–
	Requirements		• Connector is properly connected. • No trace of water entry is found. • No corrosion is found in terminal. • Connection to terminal is appropriate.
	Inspection result (Is the judging standard satisfied?)	YES	Go to step 10.
		NO	Modify connector.

Step 7	Inspection items		Inspection of harness between automatic transmission electronic control unit and controller area network resistor (HIGH)
	Maintenance item		Check circuit between controller area network resistor connector terminal No. 1 and automatic transmission electronic control unit connector (CY24A) terminal No. 20.
	Inspection condition		Disconnect each device from harness and measure from connection side of harness connector.
	Requirements		There is continuity.
	Inspection result (Is the judging standard satisfied?)	YES	Go to step 8.
		NO	Modify harness.

Step 8	Inspection items		Inspection of harness between automatic transmission electronic control unit and controller area network resistor (LOW)
	Maintenance item		Check circuit between controller area network resistor connector terminal No. 2 and automatic transmission electronic control unit connector (CY24A) terminal No. 21.
	Inspection condition		Disconnect each device from harness and measure from connection side of harness connector.
	Requirements		There is continuity.
	Inspection result (Is the judging standard satisfied?)	YES	Go to step 9.
		NO	Modify harness.

Step 9	Inspection items		Inspection of automatic transmission electronic control unit connector
	Maintenance item		Inspection of connector
	Inspection condition		–
	Requirements		• Connector is properly connected. • No trace of water entry is found. • No corrosion is found in terminal. • Connection to terminal is appropriate.
	Inspection result (Is the judging standard satisfied?)	YES	Replace the engine electronic control unit as well if this diagnosis code occurs after the replacement of automatic transmission electronic control unit.
		NO	Modify connector.

4. Multi-Use Tester Service Data

• Both service data and actuator test results are indicated at the same time.

No.	Item	Data	Inspection condition	Criterion for normality
01	Engine Revolution	■■■■.r/min	Racing (engine in operation)	Synchronous with tachometer
02	LOAD Value	■■■■.%	Starter switch ON	0%
0A	Reference Injection Quantity	■■■■.%	Idling	0% or lower
10	Intake Air Temperature (EGR)	■■■. ■°F	Engine cold	Value corresponds to ambient temperature
14	Fuel Temperature (leak)	■■■. ■°F	Engine cold	Value corresponds to ambient temperature
16	PTO Adjustment Resistor No.	1/2/3/4/5/6/7/8/9/10/11/NON	–	–
17	Exhaust Gas Flow	■■■■.m3/h	During warm-up	Gradually increased
19	Reference Common Rail Pressure 2	■■■. ■%	Idling	0% or lower
1B	Actual Common Rail Pressure 2	■■■. ■%	Idling	0% or lower
1C	Difference Common Rail Pressure 2	■■■. ■%	Idling	0% or lower
1F	Auto Cruise Reference Speed	■■■■.mph	Vehicle in auto cruise mode	Same vehicle speed in auto cruise mode
20	Atmospheric Pressure	■■■■.psi	Altitude: 0 m {0 ft.}	14.6 psi
			Altitude: 600 m {1970 ft.}	13.8 psi
21	Boost Pressure	■■■■.psi	Starter switch ON (engine stationary)	Coincides with atmospheric pressure
			After engine has started, press accelerator pedal	Gradually increased
22	Difference pressure across DPF	■■■■.psi	Accelerator pedal pressed	Gradually increased
23	Exhaust gas pressure	■■■■.psi	Accelerator pedal pressed	Gradually increased
24	OXI CAT Temperature	■■■■.°F	During warm-up	Gradually increased
25	DPF Temperature (UpStream)	■■■■.°F	During warm-up	Gradually increased
26	DPF Temperature (DownStream)	■■■■.°F	During warm-up	Gradually increased
27	Downstream OXI CAT Temperature	■■■■.°F	During warm-up	Gradually increased
28	DPF Related Information	Memory/No memory	Before electronic control unit reset	Memory
			After electronic control unit reset	No memory
30	Intake Air Temp. (upstream)	■■■■.°F	Engine cold	Value corresponds to ambient temperature
31	Water Temperature	■■■■.°F	Engine cold	Value corresponds to ambient temperature
			During warm-up	Gradually increased
			When engine is stopped after warm-up	Gradually declines
32	Water Temperature 2	■■■■.°F	Engine cold	Value corresponds to ambient temperature
			During warm-up	Gradually increased
			When engine is stopped after warm-up	Gradually declines

No.	Item	Data	Inspection condition	Criterion for normality
33	Fuel Temperature (inlet)	■■■■.°F	Engine cold	Value corresponds to ambient temperature
			During warm-up	Gradually increased
			When engine is stopped after warm-up	Gradually declines
40	Accelerator sensor voltage 1	■■. ■■V	Accelerator pedal gradually pressed from released position.	0.85 to 4.15 V
41	Accelerator sensor voltage 2	■■. ■■V	Accelerator pedal gradually pressed from released position.	0.85 to 4.15 V
42	Accel Pedal Position (unfiltered)	■■■■.%	Accelerator pedal released	0%
			Gradually press.	Gradually increased
			Accelerator pedal fully pressed	100%
43	Accel Pedal Position (filtered)	■■■■.%	Accelerator pedal released	0%
			Gradually press.	Gradually increased
			Accelerator pedal fully pressed	100%
50	Target EGR Valve Position	■■■■.%	Idling	100%
51	Actual EGR Valve Position	■■■■.%	Idling	100%
			[Actuator test] A0: EGR 1	
52	Target Intake Throttle Position	■■■■.%	Idling	10 to 20%
53	Actual Intake Throttle Position	■■■■.%	Idling	10 to 20%
			[Actuator test] A3: Intake Throttle 1	
54	Target VGT Position	■■■■.%	Starter switch ON	10%
55	Actual VGT Position	■■■■.%	Starter switch ON	10%
			[Actuator test] A4: VGT 1	
56	EGR Temperature	■■■■.°F	During warm-up	Gradually increased
60	Air mass flow	■■■■.g/h	Gradually press accelerator pedal.	Gradually increased
80	Power Supply Voltage	■■■. ■V	Starter switch ON	Value matches battery voltage.
82	Q Adjustment Resistor No.	1/2/3/4/5/6/7/8/9/ 10/11/NON	–	–
83	PTO Accel Position	■■■■.%	Power take-off is operated (MIN-MAX)	0 to 100%
84	PTO Accel Sensor Voltage	■■. ■■V	Power take-off is operated (MIN-MAX)	1.0 to 3.0 V
85	PTO Engine Revolution	■■■■.rpm	PTO in operation	Value matches preset PTO idling speed
90	Vehicle Speed	■■■■.mph	During vehicle operation	Synchronous with speedometer
91	Speed Limiter Reference Speed	■■■■.mph	Vehicle speed being limited	Same vehicle speed as that of speed limit
A0	Starter SW (S)	ON/OFF	Engine cranked by means of starter switch	ON
			Starter switch except START position	OFF
A1	Starter SW (M)	ON/OFF	Starter switch ON position	ON
			Starter switch except ON position	OFF
A2	Accel SW	ON/OFF	Accelerator pedal released	ON
			Accelerator pedal released	OFF
A3	Break SW	ON/OFF	Combination switch ON	ON
			Combination switch OFF	OFF

No.	Item	Data	Inspection condition	Criterion for normality
A4	DPF SW	ON/OFF	Diesel particulate filter cleaning switch ON	ON
			Diesel particulate filter cleaning switch OFF	OFF
			[Actuator test] A5: DPF Regeneration (Manual)	
A5	Parking Break SW	ON/OFF	Vehicle parked	ON
			Vehicle in motion	OFF
A6	Auxiliary Brake SW 1	ON/OFF	Exhaust brake operating	ON
			Exhaust brake not operating	OFF
A7	Clutch SW	ON/OFF	Clutch pedal pressed	ON
			Clutch pedal released	OFF
A8	Neutral SW	ON/OFF	Transmission neutral position	ON
			Transmission except neutral position	OFF
A9	Idle Up Cancel SW	ON/OFF	Change lever in D position	ON
			<Manual transmission> Normally <Automatic transmission> Change lever in N position	OFF
			[Actuator test] B4: Idle Up Canel SW	
AA	AC SW	ON/OFF	Air conditioner compressor running	ON
			Air conditioner compressor not running	OFF
			[Actuator test] B3: Air Conditioner SW	
AC	Torque Cut SW	ON/OFF	Transmission in 1st or reverse	ON
			Except above	OFF
AD	PTO SW	ON/OFF	Switch ON	ON
			Switch OFF	OFF
AE	Diagnosis SW	ON/OFF	Diagnosis switch (fuse connected)	ON
			Diagnosis switch (fuse disconnected)	OFF
AF	Auxiliary Brake Cut SW	ON/OFF	Operated under following conditions • Accelerator and clutch pedals are pressed • Transmission in neutral position • Anti-lock brake system in operation	ON
			Except above conditions	OFF
B0	Auxiliary Brake M/V 1	ON/OFF	Exhaust brake operating	ON
			Exhaust brake not operating	OFF
			[Actuator test] AA: Auxiliary Brake M/V 1	
B1	Auxiliary Brake Indicator Lamp	ON/OFF	Exhaust brake operating	ON
			Exhaust brake not operating	OFF
			[Actuator test] AB: Auxiliary Brake Indicator Lamp	
B2	Glow Relay	ON/OFF	Perform actuator test	ON
			Actuator test not performed	OFF
			[Actuator test] AC: Relay for Glow Relay	

No.	Item	Data	Inspection condition	Criterion for normality
B3	Glow Indicator Lamp	ON/OFF	Preheater in operation	ON
			Preheater not in operation	OFF
			[Actuator test] AD: Glow Indicator Lamp	
B4	Starter Safety Relay	ON/OFF	Perform actuator test	ON
			Actuator test not performed	OFF
			[Actuator test] AE: Starter Safety Relay	
B5	EDU Power Relay	ON/OFF	Starter switch ON	ON
			Starter switch OFF	OFF
			[Actuator test] AF: EDU Relay	
B6	MIL	ON/OFF	Starter switch ON (Do not start engine)	ON
			No error after engine startup	OFF
			[Actuator test] B0: MIL	
B7	Diagnosis Lamp	ON/OFF	Starter switch ON (Do not start engine)	ON
			No error after engine startup	OFF
			[Actuator test] B1: Diagnosis Lamp	
B8	DPF Indicator Lamp	ON/OFF	During manual diesel particulate filter regeneration	ON
			Except above	OFF
			[Actuator test] A6: DPF Lamp	

5. Mode 06 Data

5.1 General description

- Mode 06 data are used for checking if the system and its components are in order, using not a Multi-Use Tester but a commercial tester.
- Monitor IDs identify individual system components or entire systems under diagnostic test.
- Test IDs indicate specific diagnostic test items of the system components or systems identified by monitor IDs.

5.2 Mode 06 data conversion factor list

- Shown below is a list of conversion factors for commercial tester data of diagnostic test items.

Monitor ID $21: Catalyst

Test ID	Description of test data	Description of test limit	Conversion factor
$A1	Difference temperature between OxiCat inlet and DPF inlet	Malfunction criteria for diesel oxidation catalyst deterioration	0.1°C per bit

Monitor ID $31: EGR

Test ID	Description of test data	Description of test limit	Conversion factor
$91	EGR mass flow	Malfunction criteria for blockage and leaks in pipe work or cooler, or EGR valve stuck shut/open	0.001 kg/h per bit

Monitor ID $81: Fuel system

Test ID	Description of test data	Description of test limit	Conversion factor
$81	Rail pressure voltage in offset test	Malfunction criteria for rail pressure sensor	0.001 V per bit

Monitor ID $A2: Mis-fire Cylinder 1

Test ID	Description of test data	Description of test limit	Conversion factor
$0B	EWMA (Exponential Weighted Moving Average) misfire counts for last 10 driving cycles	Malfunction criteria for misfire of cylinder-1	1 per bit
$0C	Misfire counts for last/current driving cycles		

Monitor ID $A3: Mis-fire Cylinder 2

Test ID	Description of test data	Description of test limit	Conversion factor
$0B	EWMA (Exponential Weighted Moving Average) misfire counts for last 10 driving cycles	Malfunction criteria for misfire of cylinder-2	1 per bit
$0C	Misfire counts for last/current driving cycles		

Monitor ID $A4: Mis-fire Cylinder 3

Test ID	Description of test data	Description of test limit	Conversion factor
$0B	EWMA (Exponential Weighted Moving Average) misfire counts for last 10 driving cycles	Malfunction criteria for misfire of cylinder-3	1 per bit
$0C	Misfire counts for last/current driving cycles		

Monitor ID $A5: Mis-fire Cylinder 4

Test ID	Description of test data	Description of test limit	Conversion factor
$0B	EWMA (Exponential Weighted Moving Average) misfire counts for last 10 driving cycles	Malfunction criteria for misfire of cylinder-4	1 per bit
$0C	Misfire counts for last/current driving cycles		

Monitor ID $85: Boost

Test ID	Description of test data	Description of test limit	Conversion factor
$B1	Boost pressure	Malfunction criteria for turbocharger actuator deviation	0.001 kPa per bit

Monitor ID $B2: DPF

Test ID	Description of test data	Description of test limit	Conversion factor
$B1	Filter pressure drop	Malfunction criteria for soot and ash loadings	0.001 kPa per bit

6. Actuator Tests Performed Using Multi-Use Tester

• Both service data and actuator test results are indicated at the same time.

No.	Item	Description	Check method
A0	EGR 1	Exhaust gas recirculation valve opening maintained as commanded by Multi-Use Tester NOTE: Immediately after the starter switch is turned to ON, the exhaust gas recirculation valve is automatically checked for about 5 seconds. An actuator test using the Multi-Use Tester must be performed after waiting this period. [Can be executed under following conditions] • Vehicle: stationary (vehicle speed 0 km/h {0 MPH}) • Starter switch: ON (engine started) • Transmission: neutral or P range • Diagnosis switch: OFF (fuse removed)	Check that exhaust gas recirculation valve opening changes. [Service data] 51: Actual EGR Valve Position
A3	Intake Throttle 1	Intake throttle valve opening maintained as commanded by Multi-Use Tester [Can be executed under following conditions] • Vehicle: stationary (vehicle speed 0 km/h {0 MPH}) • Starter switch: ON (engine started) • Transmission: neutral or P range • Diagnosis switch: OFF (fuse removed)	Check that throttle valve opening changes. [Service data] 53: Actual Intake Throttle Position
A4	VGT 1	Turbocharger opening maintained as commanded by Multi-Use Tester NOTE: • Set turbocharger opening to the range of 20 to 80%. • Immediately after the starter switch is turned to ON, the turbocharger actuator automatically undergoes an initial operational checkup for about 5 seconds. An actuator test using the Multi-Use Tester must be performed after waiting this period. [Can be executed under following conditions] • Vehicle: stationary (vehicle speed 0 km/h {0 MPH}) • Starter switch: ON (engine started) • Transmission: neutral or P range • Diagnosis switch: OFF (fuse removed)	Check that turbine vane opening changes. Used for boost pressure measurement/adjustment (See Gr15.) [Service data] 54: Target VGT Position 55: Actual VGT Position
A5	DPF Regeneration (Manual)	Request is output for manual diesel particulate filter regeneration [Can be executed under following conditions] • Vehicle: stationary (vehicle speed 0 km/h {0 MPH}) • Starter switch: ON (engine started) • Engine: Idling • Parking brake: Vehicle parked (parking brake switch: ON) • After engine warm-up	• Check that diesel particulate filter indicator lamp flickers • Manual diesel particulate filter regeneration started with diesel particulate filter cleaning switch ON and engine speed increased. [Service data] A4: DPF SW
A6	DPF Lamp	Diesel particulate filter indicator lamp turned ON/OFF [Can be executed under following conditions] • Vehicle: stationary (vehicle speed 0 km/h {0 MPH}) • Starter switch: ON • Engine: Idling • Transmission: neutral or P range	Check that indicator lamp is turned on and off [Service data] B8: DPF Indicator Lamp

No.	Item	Description	Check method
A8	EGR, ETV, VGT	Exhaust gas recirculation, intake throttle and turbocharger opening maintained as commanded by Multi-Use Tester NOTE: • Set turbocharger opening to the range of 20 to 80%. • Immediately after the starter switch is turned to ON, the exhaust gas recirculation valve and turbocharger actuator automatically undergo initial operational checkups for about 5 seconds. An actuator test using the Multi-Use Tester must be performed after waiting this period. [Can be executed under following conditions] • Vehicle: stationary (vehicle speed 0 km/h {0 MPH}) • Starter switch: ON (engine started) • Transmission: neutral or P range • Diagnosis switch: OFF (fuse removed) • Caution!: When actuator test is executed during engine stop, turn starter switch OFF after engine startup and then ON within 15 seconds (Do not start engine).	Check that exhaust gas recirculation, intake throttle and turbine vane valve openings change. Used for boost pressure measurement/adjustment (See Gr15.) [Service data] 51: Actual EGR Valve Position 53: Actual Intake Throttle Position 55: Actual VGT Position
AA	Auxiliary Brake M/V 1	Exhaust shutter 2-way magnetic valve driving signal [Can be executed under following conditions] • Vehicle: stationary (vehicle speed 0 km/h {0 MPH}) • Starter switch: ON • Engine: stopped	Magnetic valve operating sound [Service data] B0: Auxiliary Brake M/V 1
AB	Auxiliary Brake Indicator Lamp	Exhaust brake indicator lamp driving signal [Can be executed under following conditions] • Vehicle: stationary (vehicle speed 0 km/h {0 MPH}) • Starter switch: ON • Engine: stopped	Check that indicator lamp is turned on and off [Service data] B1: Auxiliary Brake Indicator Lamp
AC	Relay for Glow Relay	ON/OFF switchover of glow drive relay [Can be executed under following conditions] • Vehicle: stationary (vehicle speed 0 km/h {0 MPH}) • Starter switch: ON • Engine: stopped	Relay operating sound [Service data] B2: Glow Relay
AD	Glow Indicator Lamp	Preheating indicator lamp driving signal [Can be executed under following conditions] • Vehicle: stationary (vehicle speed 0 km/h {0 MPH}) • Starter switch: ON • Engine: stopped	Check that indicator lamp is turned on and off [Service data] B3: Glow Indicator Lamp
AE	Starter Safety Relay	ON/OFF switchover of starter continuous power-on preventive relay (safety relay) [Can be executed under following conditions] • Vehicle: stationary (vehicle speed 0 km/h {0 MPH}) • Starter switch: ON • Engine: stopped	Relay operating sound [Service data] B4: Starter Safety Relay
AF	EDU Relay	ON/OFF switchover of electronic drive unit relay (errors involving exhaust gas recirculation, intake air throttle and turbocharger may be detected during this actuator test). [Can be executed under following conditions] • Vehicle: stationary (vehicle speed 0 km/h {0 MPH}) • Starter switch: ON • Engine: stopped	Relay operating sound [Service data] B5: EDU Power Relay
B0	MIL	Engine warning lamp (orange) driving signal [Can be executed under following conditions] • Vehicle: stationary (vehicle speed 0 km/h {0 MPH}) • Transmission: neutral or P range • Engine: stopped	Check that warning lamp (orange) is turned on and off [Service data] B6: MIL
B1	Diagnosis Lamp	Engine warning lamp (red) driving signal [Can be executed under following conditions] • Vehicle: stationary (vehicle speed 0 km/h {0 MPH}) • Transmission: neutral or P range • Engine: stopped	Check that warning lamp (red) is turned on and off [Service data] B7: Diagnosis Lamp

No.	Item	Description	Check method
B2	Fuel Leak Check	Rail pressure is increased for a certain period of time (6 seconds). [Can be executed under following conditions] • Vehicle: stationary (vehicle speed 0 km/h {0 MPH}) • Transmission: neutral or P range • Diagnosis switch: OFF (fuse removed)	Check for leakage from fuel system.
B3	Air Conditioner SW	ON/OFF switchover of air conditioner operation (idle up control) is performed. [Can be executed under following conditions] • Vehicle: stationary (vehicle speed 0 km/h {0 MPH}) • Transmission: neutral or P range • Engine: Idling	Check that engine speed increases and decreases. [Service data] AA: AC SW
B4	Idle Up Cancel SW	ON/OFF switchover of idle up inhibited status [Can be executed under following conditions] • Vehicle: stationary (vehicle speed 0 km/h {0 MPH}) • Transmission: neutral or P range	Check that idling speed remains low. [Service data] A9: Idle Up Cancel SW
B5	GCU (GLOW PLUG)	ON/OFF switchover of the glow plugs [Can be executed under following conditions] • Vehicle: stationary (vehicle speed 0 km/h {0 MPH}) • Starter switch: ON • Engine: stopped	Check to see that the glow plugs are energized.
BB	Injector Test 1	Selected injector magnetic valve is forced to stop. [Can be executed under following conditions] • Vehicle: stationary (vehicle speed 0 km/h {0 MPH}) • Engine speed: 1500 rpm or less • Transmission: neutral • The current diagnosis code does not occur.	Check that No. 1 cylinder injector magnetic valve is stopped.
BC	Injector Test 2		Check that No. 4 cylinder injector magnetic valve is stopped.
BD	Injector Test 3		Check that No. 2 cylinder injector magnetic valve is stopped.
BE	Injector Test 4		Check that No. 3 cylinder injector magnetic valve is stopped.

M E M O

REGISTRATION AND ALTERATION OF DATA IN ENGINE ELECTRONIC CONTROL UNIT

1. Operation at Electronic Control Unit Replacement

- Vehicle information and equipment specifications are registered in each engine electronic control unit as coded data (coding data).
- Given in the chart below are the items on which registered data in the engine electronic control unit are necessary to alter or new data are necessary to register with the disposition of equipment.
- If the electronic control unit is left initialized with no necessary data registered, it is not capable of proper engine control.
- For data alteration/registration and data write operation, contact your nearest MITSUBISHI FUSO dealer or MITSUBISHI FUSO TRUCK OF AMERICA, Inc.

Engine electronic control unit data / Disposition of equipment		VIN (Vehicle Identification Number)	Injector correction	Injection quantity correction	Air flow sensor characteristics	PTO idling speed	Ash accumulation data transfer	Remarks
Engine electronic control unit	Replaced with new unit	O	O	O	O	O	O	
	Relocated from other vehicle	O	O	O	O	O	O	
	Erasure of diagnosis codes							No action is required.
Replacement of injector			O					Data code (IQA code) differs from injector to injector and is necessary to change.
Replacement of air flow sensor								Data is not necessary to change if the replacement is identical.
Change of PTO idling speed						O		

○ : Denotes the necessity of data being updated or registered.

IQA: Injection Quantity Adjustment

2. Resetting the Diesel Particulate Filter Related Information (Resetting Electronic Control Unit)

- On the regeneration control type as diesel particulate filter system, the engine electronic control unit stores many diesel particulate filter related information to control the diesel particulate filter regeneration as diesel particulate filter history.
- If the ceramic filter is replaced or cleaned without regeneration, reset the history of diesel particulate filter using Multi-Use Tester. (For reset procedure, see Gr15.)
- In the case of diesel particulate filter regeneration by use of the diesel particulate filter cleaning switch, however, history reset with a Multi-Use Tester is not required because the history is automatically reset by engine electronic control unit.

M E M O

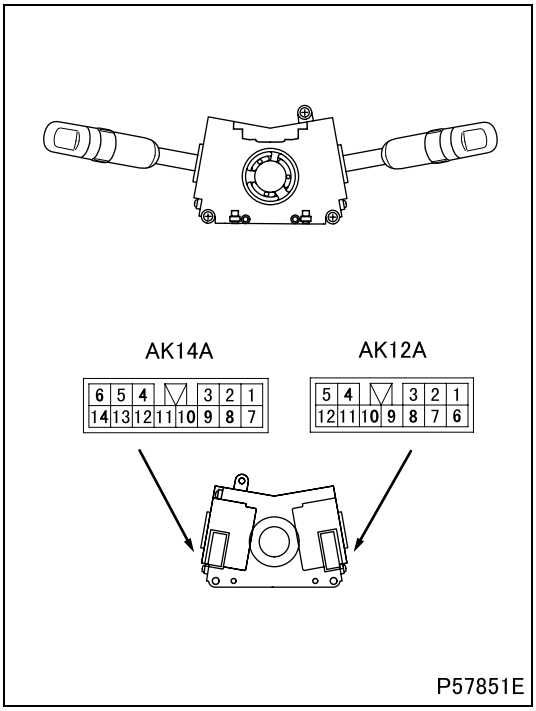

#001 Inspection of combination switch

AK14A connector connection table

Switch position		Terminals with continuity
Exhaust brake switch	OFF	–
	ON	8 - 9

- For other inspections than shown above, see Electrical.
- If there is any abnormality, replace the switch.

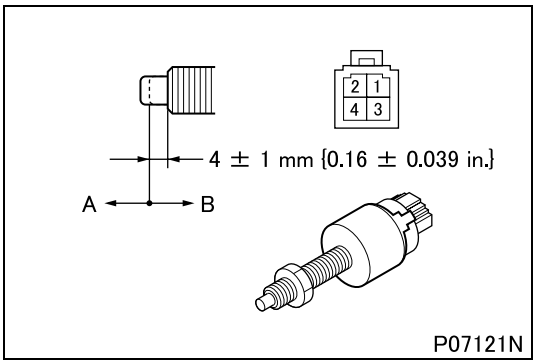

#031 Inspection of clutch switch

Switch position	Terminals with continuity
A	1 - 4
B	2 - 3

- If there is any abnormality, replace the switch.

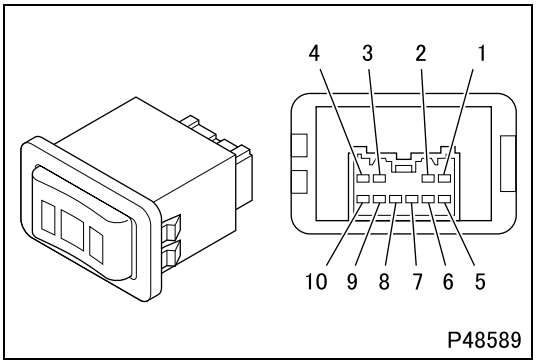

#089 Inspection of DPF cleaning switch

Switch position	Terminals with continuity	Night lighting
–	1 - 8	(+) 6 - 2 (–)
ON	1 - 7	

- If there is any abnormality, replace the switch.

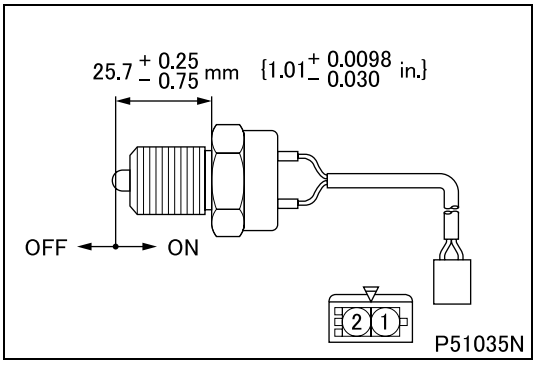

#163 Inspection of torque limit switch

Switch position	Terminals with continuity
OFF	–
ON	1 - 2

- If there is any abnormality, replace the switch.

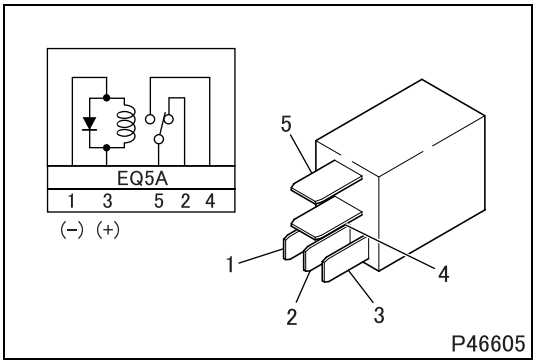

#201 Inspection of relay (normally open 5-pin)

- Check continuity and operating condition of the relay. Replace the relay if necessary.

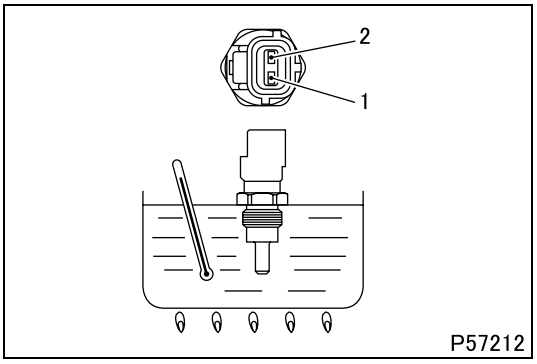

#262 Inspection of water temperature sensor

<Water temperature sensor 1>

- Place the water temperature sensor in a container filled with engine oil.
- Heat the oil to each of the specified temperatures. Stir the oil well while doing so.
- Measure the resistance between terminals 1 and 2.

Standard value	20°C {68°F}	2.45 ± 0.14 kΩ
	80°C {176°F}	0.32 kΩ (reference value)
	110°C {230°F}	147.1 ± 2 Ω

- If the measurement is out of specification, replace the sensor.

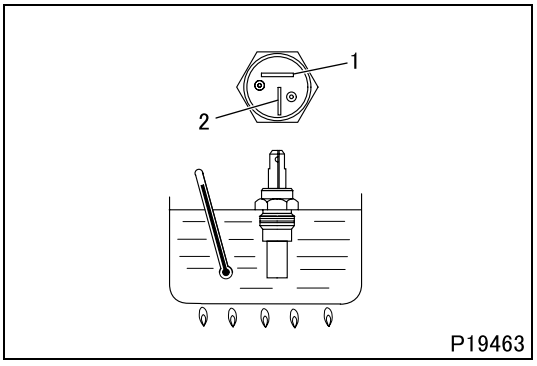

<Water temperature sensor 2>

- Place the water temperature sensor in a container filled with engine oil.
- Heat the oil to each of the specified temperatures. Stir the oil well while doing so.
- Measure the resistance between terminals 2 and the body.

Standard value	–20°C {–4°F}	24.8 ± 2.5 kΩ
	0°C {32°F}	8.62 kΩ
	20°C {68°F}	3.25 ± 0.33 kΩ
	60°C {140°F}	620 Ω
	80°C {176°F}	300 Ω

- If the measurement is out of specification, replace the sensor.

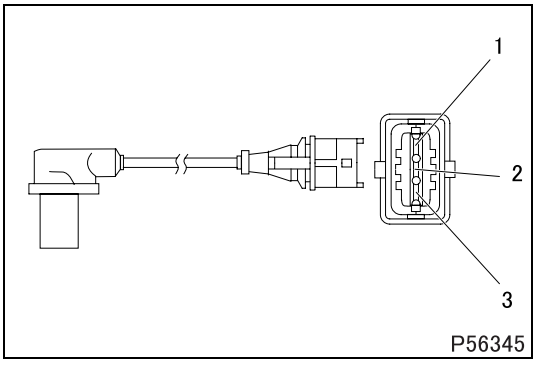

#263 Inspection of engine speed sensor

- Measure the resistance between terminals 1 and 2.

Standard value (at 20°C {68°F})	860 ± 86 Ω

- If the measurement is out of specification, replace the sensor.

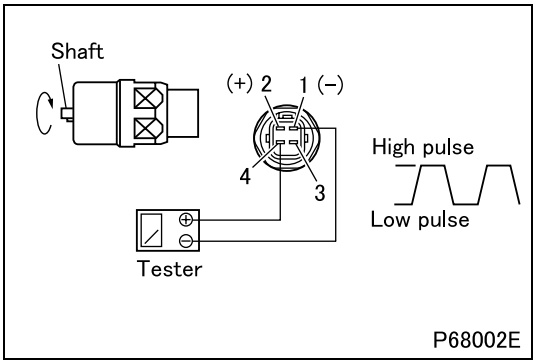

#265 Inspection of vehicle speed sensor

- With the DC 12 V applied to terminals 1 and 2, slowly turn the shaft of the vehicle speed sensor.
- Measure the maximum voltage (high pulse voltage) and minimum voltage (low pulse voltage) occurring at each specified pair of terminals.

Terminals	Inspection condition	Standard value
25-pulse output: terminals 1 and 4	Low pulse voltage	0.5 V or lower
	High pulse voltage	8 ± 1 V

- If any measurement is out of specification, replace the sensor.

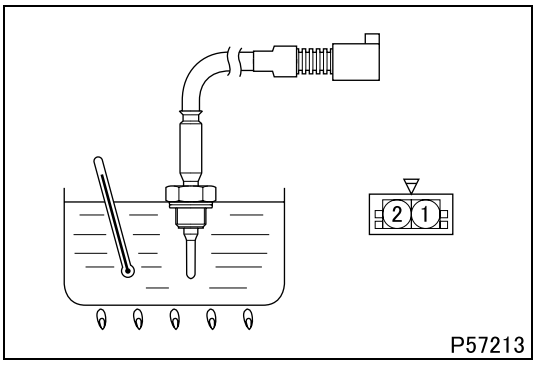

#305 Inspection of air temperature sensor

<Intake air temperature sensor>

- The intake air temperature sensor may output false signals if its tip is contaminated. Clean it if necessary. (See Gr15.)
- Place the sensor in a container filled with engine oil.
- Heat the oil to each of the specified temperatures. Stir the oil well while doing so.
- Measure the resistance between terminals 1 and 2.

Standard value	50°C {122°F}	$2.202\ ^{+0.233}_{-0.208}$ kΩ
	100°C {212°F}	$508.1\ ^{+41.3}_{-37.7}$ Ω
	150°C {302°F}	$160.4\ ^{+10.3}_{-9.6}$ Ω

- If either measurement is out of specification, replace the sensor.

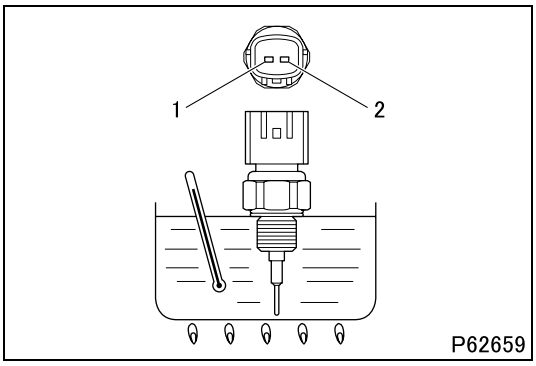

<Boost air temperature sensor>

- The boost air temperature sensor may output false signals if its tip is contaminated. Clean it if necessary. (See Gr15.)
- Place the sensor in a container filled with engine oil.
- Heat the oil to each of the specified temperatures. Stir the oil well while doing so.
- Measure the resistance between terminals 1 and 2.

Standard value	0°C {32°F}	$162.3\ ^{+48.8}_{-36.5}$ kΩ
	20°C {68°F}	$61.47\ ^{+15.99}_{-12.35}$ kΩ
	80°C {176°F}	$6.120\ ^{+1.095}_{-0.907}$ kΩ

- If the measurement is out of specification, replace the sensor.

#306 Inspection of air flow sensor

- The sensor cannot be checked as a single unit. Instead, measure and compare the intake air flow rates of the existing sensor mounted on the vehicle and a new sensor installed in the place of the existing sensor for inspection using corresponding Multi-Use Tester Service Data items to determine characteristics deterioration in the existing sensor mounted on the vehicle.

(1) Preparation for inspection

- Clean or replace the air cleaner element.
- Make a new air flow sensor ready for use.
- Warm up the engine enough.
- Connect a Multi-Use Tester. (See Gr00.)

(2) Measurement of existing sensor intake air flow rate

- Press the accelerator pedal from the idling position all the way down to the stopper bolt. (The engine is running at maximum speed under no load.)
- Measure the following items from “Service Data”.
  <General Scanning Tool used>
  Engine speed: “Ne” (rpm)
  Intake air flow rate: “Air Flow Rate from MAFS” (g/s)
  <Multi-Use Tester used>
  Engine speed: 01 “Engine Revolution” (rpm)
  Intake air flow rate: 60 “Air mass flow” (g/s)

(3) Measurement of new sensor intake air flow rate

- Remove the existing sensor mounted on the vehicle and install a new sensor in its place.
- Press the accelerator pedal from the idling position all the way down to the stopper bolt. (The engine is running at maximum speed under no load.)
- From “Service Data”, measure intake air flow rate at the same speed as the engine speed under (2) above.

(4) Comparison for characteristics deterioration

- Calculate the characteristics deterioration rate (%) as follows.

$$\text{Characteristics deterioration rate} = \frac{\text{New sensor intake air flow rate} - \text{Existing sensor intake air flow rate}}{\text{New sensor intake air flow rate}} \times 100\ (\%)$$

- If the calculated value is 10% or more, the characteristics of the existing sensor can be judged as deteriorated. In this case, replace it with the new sensor.

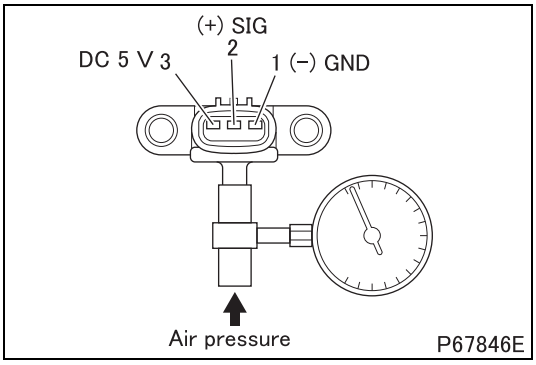

#318 Inspection of boost pressure sensor

- Apply DC 5 V to terminals 3 and 1.
- Apply air pressure. Gradually increase it and, while doing so, measure the output voltage occurring at terminals 2 and 1.

	Air pressure (gauge reading)	Voltage
Standard value	232.2 kPa {34 psi, 2.3 kg/cm^2}	Approx. 3.2 V
	99 kPa {14 psi, 1.0 kg/cm^2}	Approx. 4.5 V

- If any measurement is out of specification, replace the sensor.

#319 Inspection of common rail pressure sensor

- The sensor cannot easily be inspected in isolation, so you must evaluate it indirectly by inspection of system harnesses and related parts.
- If there is no abnormality in any related part but the system is abnormal, replace the common rail.

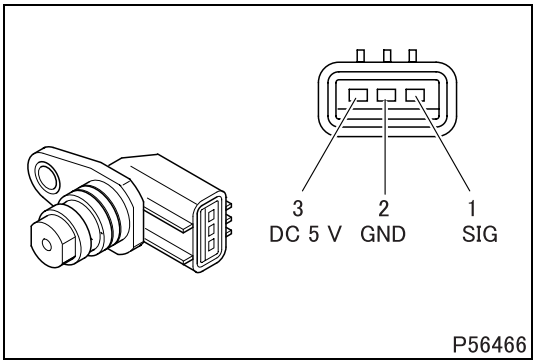

#320 Inspection of cylinder recognition sensor

- Measure the resistance between terminals 2 and 3.

Standard value	200 to 1800 Ω

- If the measurement is out of specification, replace the sensor.

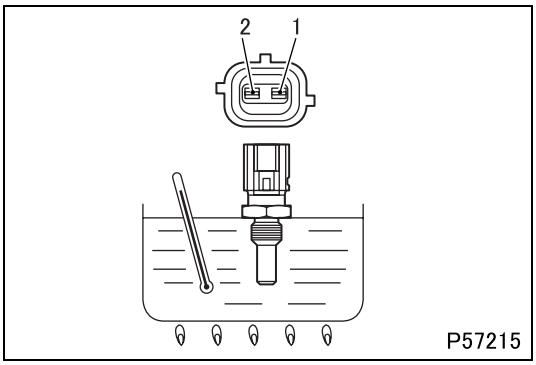

#323 Inspection of fuel temperature sensor

- Measure the resistance between terminals 1 and 2.

Standard value	20°C {68°F}	$2.45\ ^{+0.14}_{-0.13}$ kΩ
	80°C {176°F}	0.318 ± 0.01 kΩ
	110°C {230°F}	0.1417 ± 0.0018 kΩ

- If any measurement is out of specification, replace the sensor.

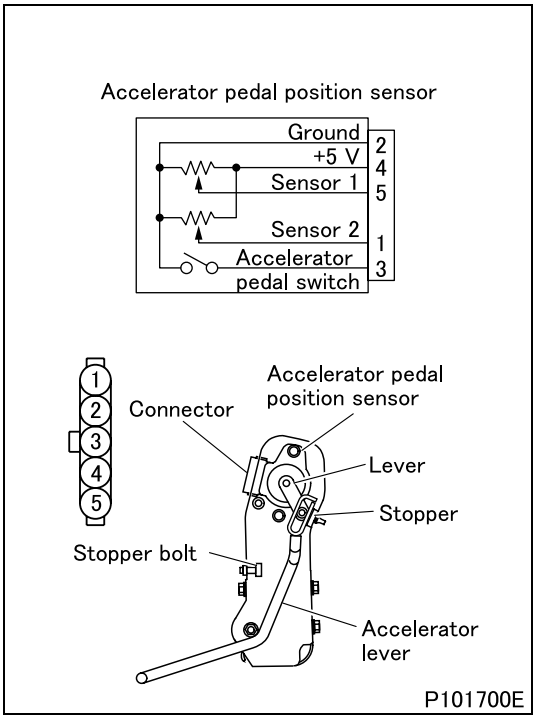

#324 Inspection of accelerator pedal position sensor

[Inspection]

- Apply DC 5 V to terminals 4 and 2 of the accelerator pedal position sensor.
- Measure the output voltage at terminals 2 and 5 (sensor 1) and the output voltage at terminals 1 and 2 (sensor 2) with the accelerator lever in each specified position.

	Accelerator lever position	Output voltage
Standard value	Idling position A	0.85 ± 0.1 V
	Accelerator pedal switch operating position B	1.0 ± 0.24 V
	Full load position C	4.15 ± 0.1 V

A: Position in which accelerator lever is touching stopper
B: Position at which continuity between terminals 2 and 3 disappears as accelerator pedal is pushed downward
C: Position in which accelerator lever is touching stopper bolt

- If any output voltage is out of specification, make an adjustment.
- If any output voltage is still out of specification when you have made an adjustment, replace the sensor.

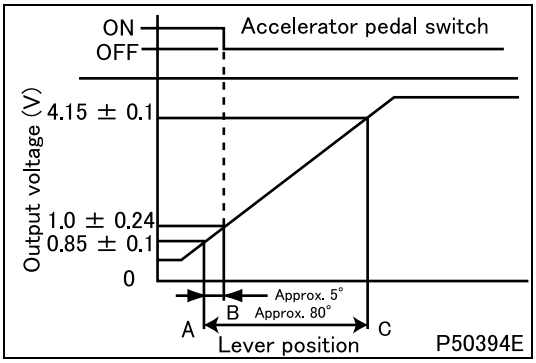

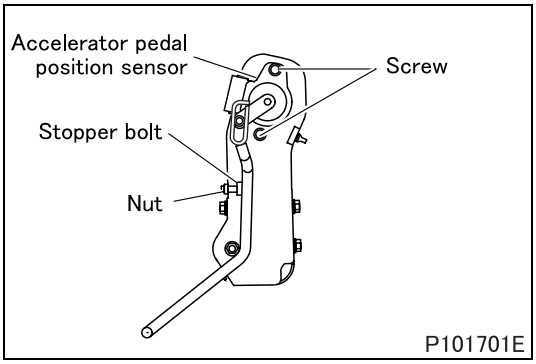

[Adjustment]

- To adjust the output voltage for the idling position A, loosen the screws and move the accelerator pedal position sensor. Tighten the screws after making the adjustment.
- To adjust the output voltage for the full load position C, loosen the nut and make the adjustment using the stopper bolt. After making the adjustment, lock the stopper bolt in position with the nut.

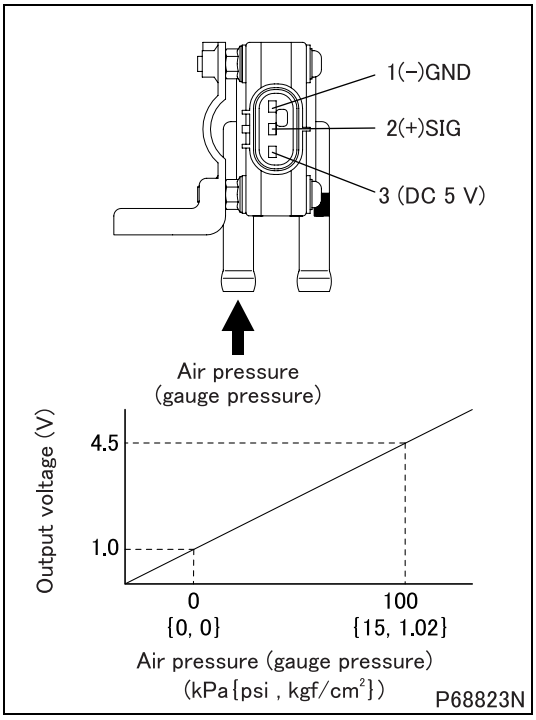

#334 Inspection of DPF pressure sensor

<DPF pressure sensor (DIFF)>

- Apply DC 5 V to terminals 3 and 1.
- Apply air pressure (gauge pressure) and measure the output voltage occurring at terminals 2 and 1 (left figure).

Standard value	0 ± 3.5 kPa {0 ± 0.5 psi, 0 ± 0.04 kgf/cm^2}	1 V
	100 ± 3.5 kPa {15 ± 0.5 psi, 1.02 ± 0.04 kgf/cm^2}	4.5 V

- If the measurement is out of specification, replace the sensor.

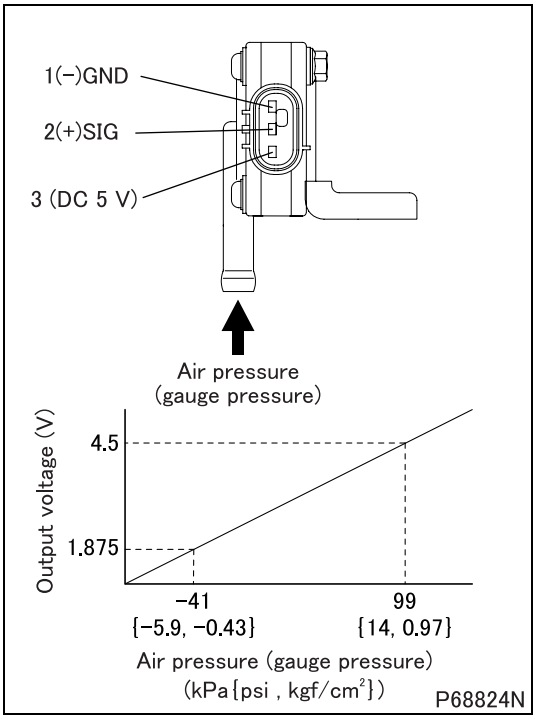

<DPF absolute pressure sensor>

- Apply DC 5 V to terminals 3 and 1.
- Apply air pressure (gauge pressure) and measure the output voltage occurring at terminals 2 and 1 (left figure).

Standard value	–41 ± 3.2 kPa {–5.9 ± 0.5 psi, –0.43 ± 0.03 kgf/cm^2}	1.875 V
	99 ± 3.2 kPa {14 ± 0.5 psi, 1.0 ± 0.03 kgf/cm^2}	4.5 V

- If the measurement is out of specification, replace the sensor.

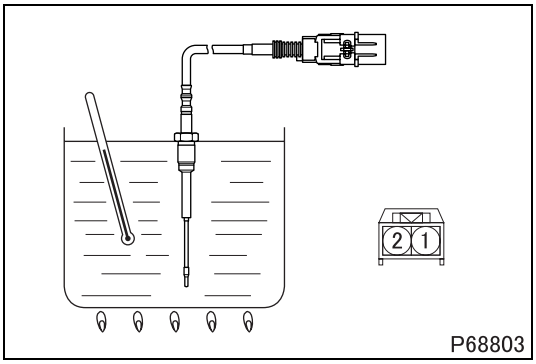

#336 DPF temperature sensor

<DPF temperature sensor 1>

- The DPF temperature sensor 1 may output false signals if its tip is contaminated. Clean it if necessary. (See Gr15.)
- Place the sensor in a container filled with engine oil.
- Heat the oil to each of the specified temperatures. Stir the oil well while doing so.
- Measure the resistance between terminals 1 and 2.

Standard value	20°C {68°F}	241.8 kΩ
	50°C {122°F}	$106.2^{+74.3}_{-41.8}$ kΩ
	100°C {212°F}	$33.56^{+17.60}_{-10.60}$ kΩ
	150°C {302°F}	$13.90^{+5.36}_{-3.60}$ kΩ
	200°C {392°F}	$6.896^{+2.064}_{-1.252}$ kΩ

- If the measurement is out of specification, replace the sensor.

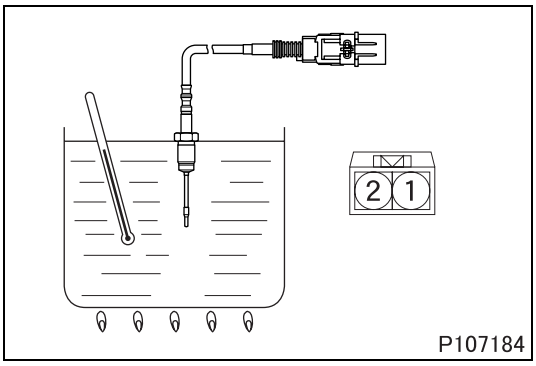

<DPF temperature sensor 2>

- The DPF temperature sensor 2 may output false signals if its tip is contaminated. Clean it if necessary. (See Gr15.)
- Place the sensor in a container filled with engine oil.
- Heat the oil to each of the specified temperatures. Stir the oil well while doing so.
- Measure the resistance between terminals 1 and 2.

Standard value	20°C {68°F}	241.8 kΩ
	50°C {122°F}	$106.2^{+74.3}_{-41.8}$ kΩ
	100°C {212°F}	$33.56^{+17.60}_{-10.60}$ kΩ
	150°C {302°F}	$13.90^{+5.36}_{-3.60}$ kΩ
	200°C {392°F}	$6.896^{+2.064}_{-1.252}$ kΩ

- If the measurement is out of specification, replace the sensor.

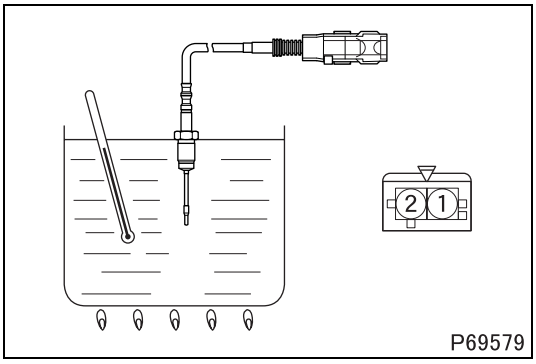

#338 Inspection of catalytic temperature sensor

- The catalytic temperature sensor may output false signals if its tip is contaminated. Clean it if necessary. (See Gr15.)
- Place the sensor in a container filled with engine oil.
- Heat the oil to each of the specified temperatures. Stir the oil well while doing so.
- Measure the resistance between terminals 1 and 2.

Standard value	20°C {68°F}	241.8 kΩ
	50°C {122°F}	$106.2^{+74.3}_{-41.8}$ kΩ
	100°C {212°F}	$33.56^{+17.60}_{-10.60}$ kΩ
	150°C {302°F}	$13.90^{+5.36}_{-3.60}$ kΩ
	200°C {392°F}	$6.896^{+2.064}_{-1.252}$ kΩ

- If the measurement is out of specification, replace the sensor.

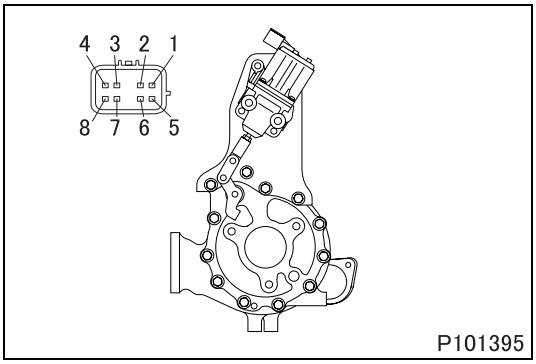

#514 Inspection of turbocharger actuator

- Perform the following checks. If there is any abnormality, replace the turbocharger actuator.

(1) Coil resistance of motor

- Measure the resistance between terminals 8 and 7, 8 and 6, and 7 and 6.

Standard value	2.1 ± 0.3 Ω

(2) Position sensor

- The sensor cannot easily be inspected, so you must evaluate it indirectly by inspection of system harnesses and related parts.
- If there is no abnormality in any related part but the system is abnormal, replace the turbocharger actuator.

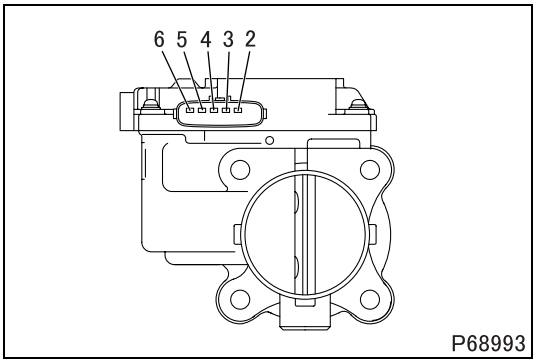

#529 Inspection of intake throttle

- Perform the following checks. If there is any abnormality, replace the intake throttle.

(1) Coil resistance of motor

- Measure the resistance between terminals 5 and 6.

Standard value	0.3 to 80 Ω

CAUTION ⚠

- **If the measurement is out of specification, manually open and close the butterfly valve and measure the resistance again.**

(2) Position sensor

- The sensor cannot easily be inspected, so you must evaluate it indirectly by inspection of system harnesses and related parts.
- If there is no abnormality in any related part but the system is abnormal, replace the intake throttle.

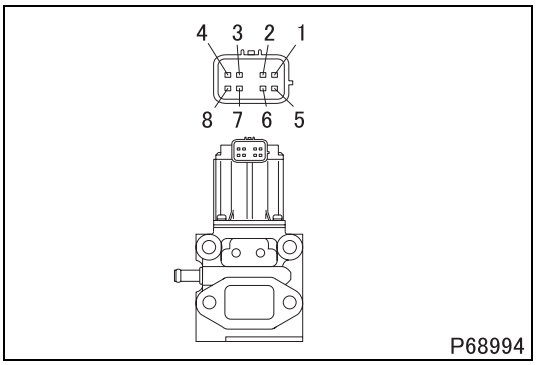

#530 Inspection of EGR valve

- Perform the following checks. If there is any abnormality, replace the EGR valve.

(1) Coil resistance of motor

- Measure the resistance between terminals 8 and 7, 8 and 6, and 7 and 6.

Standard value	2.1 ± 0.3 Ω

(2) Position sensor

- The sensor cannot easily be inspected, so you must evaluate it indirectly by inspection of system harnesses and related parts.
- If there is no abnormality in any related part but the system is abnormal, replace the EGR valve.

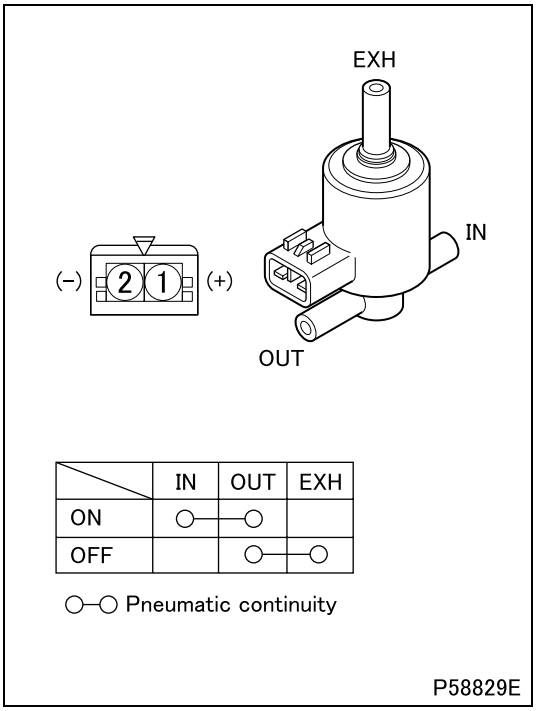

#565 Inspection of exhaust shutter 2-way magnetic valve

- Perform the following checks. If there is any abnormality, replace the exhaust shutter 2-way magnetic valve.

(1) Check of operation

- Gradually increase from zero the voltage applied to terminals 1 and 2.
- Observe the voltage when the exhaust shutter 2-way magenetic valve operates.
  (Determine the magnet valve's OFF-ON operation from the operating sound.)

Standard value (min. operating voltage)	11 V or lower

(2) Check of continuity and airtightness

- Vacuum pressure applied during check:
  –100 kPa {–15 psi, –10 kgf/cm^2}

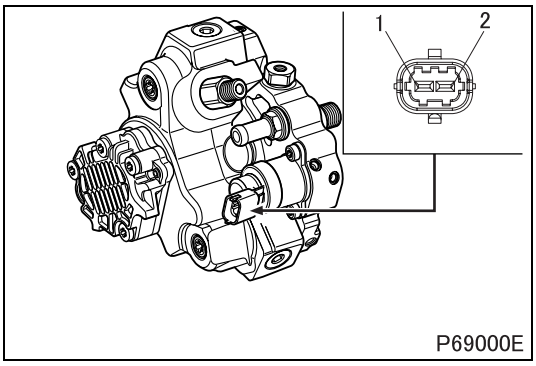

#574 Inspection of MPROP
(rail pressure control valve)

- Measure the resistance between terminals 1 and 2.

Standard value	2.6 to 3.15 Ω

- If the measurement is out of specification, replace the supply pump.

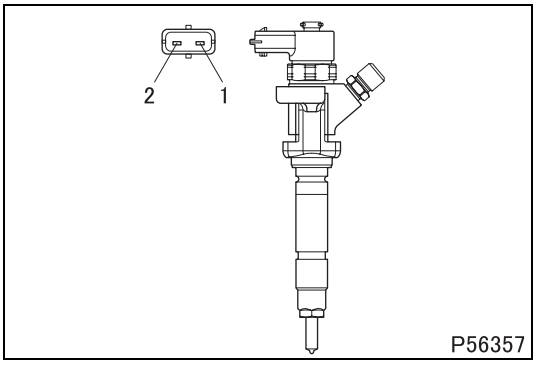

#582 Inspection of injector magnetic valve

- Measure the resistance between terminals 1 and 2.

Standard value (at 20°C {68°F})	0.255 ± 0.04 Ω

- If the measurement is out of specification, replace the injector.
- If an injector is replaced with a new one, the injector correction data must be written in the engine electronic control unit.
- For storing of data in the engine electronic control unit, contact your nearest MITSUBISHI FUSO dealer or MITSUBISHI FUSO TRUCK OF AMERICA, Inc.

M E M O

INSTALLED LOCATIONS OF PARTS

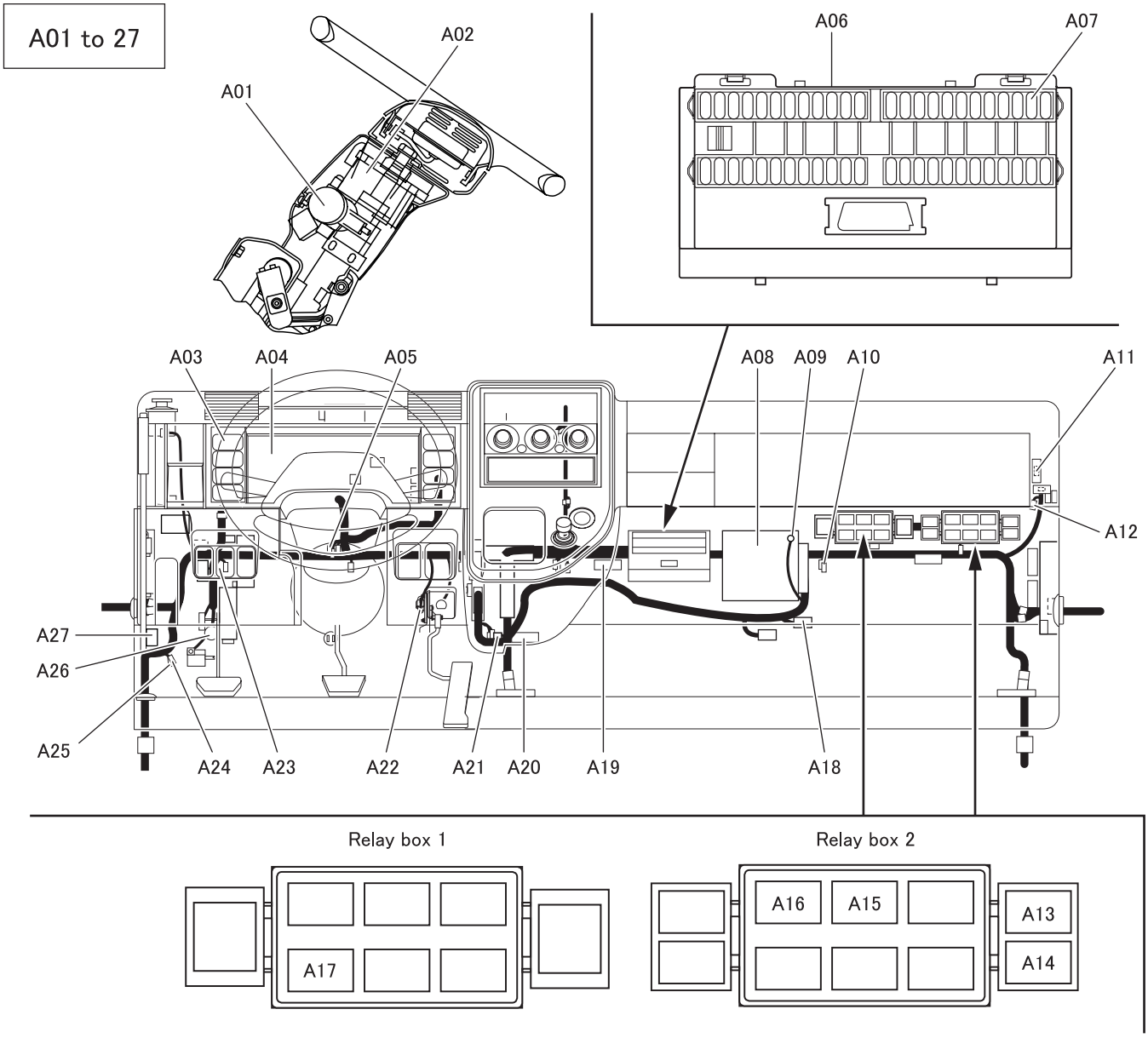

A01	Starter switch
A02	Combination switch
A03	DPF cleaning switch
A04	Meter cluster
A05	Diode
A06	Fuse box
A07	Diagnosis switch
A08	Engine ECU
A09	Ground
A10	Diode
A11	Turbocharger EDU
A12	Controller area network resistor
A13	Engine start relay ＜M/T＞ Neutral start relay ＜A/T＞
A14	T/M neutral relay ＜M/T＞ Exhaust brake cut relay ＜A/T＞
A15	Glow drive relay
A16	ABS exhaust brake cut relay
A17	Safety relay
A18	Joint connector (J/C-2)
A19	Joint connector (J/C-1)
A20	Joint connector (J/C-M1)
A21	Diode
A22	Accelerator pedal position sensor
A23	Joint connector (J/C-040) ＜A/T＞
A24	Controller area network resistor
A25	Joint connector (J/C-040)
A26	Clutch switch ＜M/T＞
A27	Diagnostic connector

ABS : Anti-lock brake system
ECU : Electronic control unit
DPF : Diesel particulate filter
J/C : Joint connector
EDU : Electronic drive unit
M/T : Manual transmission
A/T : Automatic transmission
T/M : Transmission

L03382

A30–31

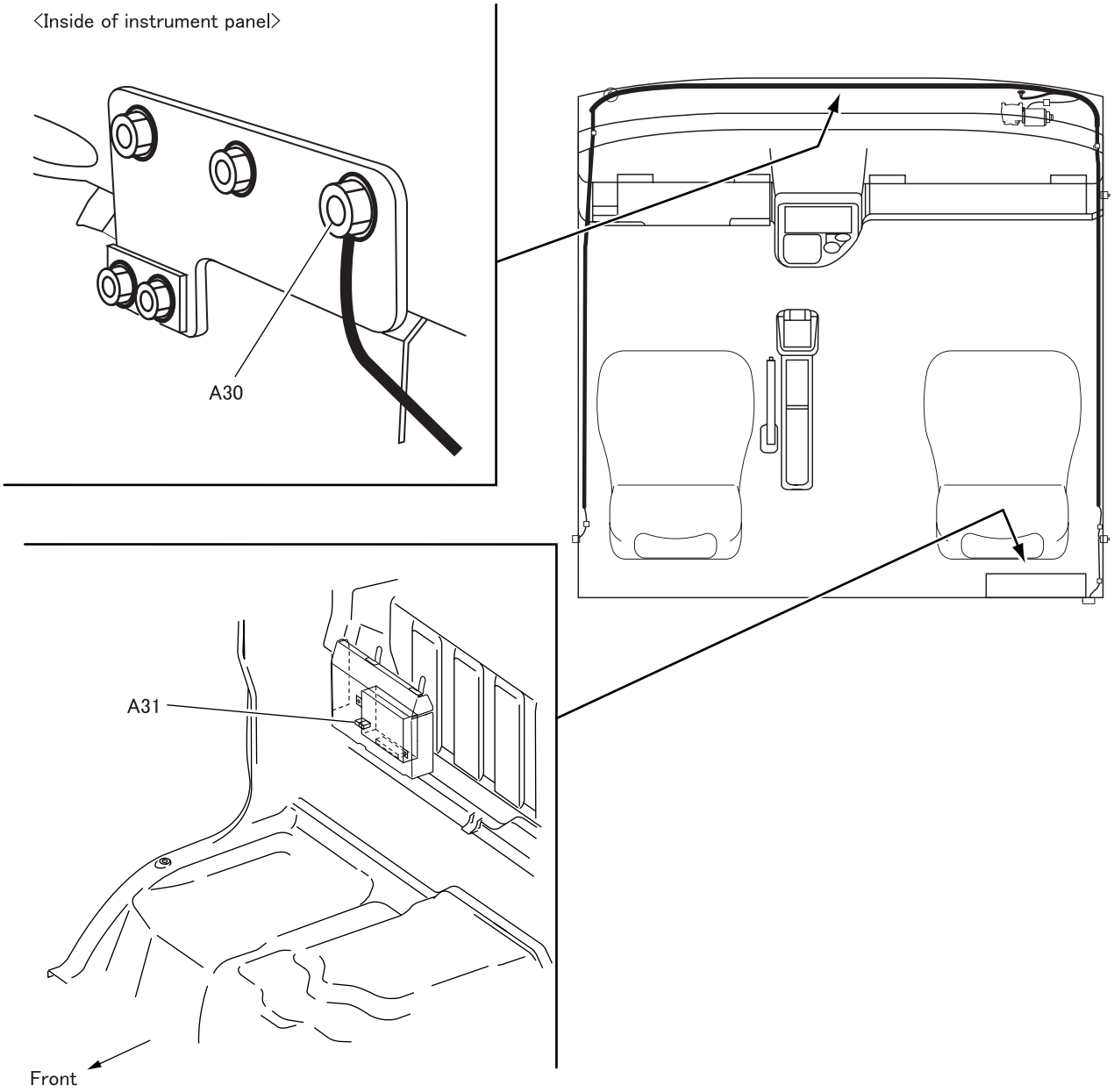

A30 Ground
A31 Controller area network resistor

INSTALLED LOCATIONS OF PARTS

B01 to 27

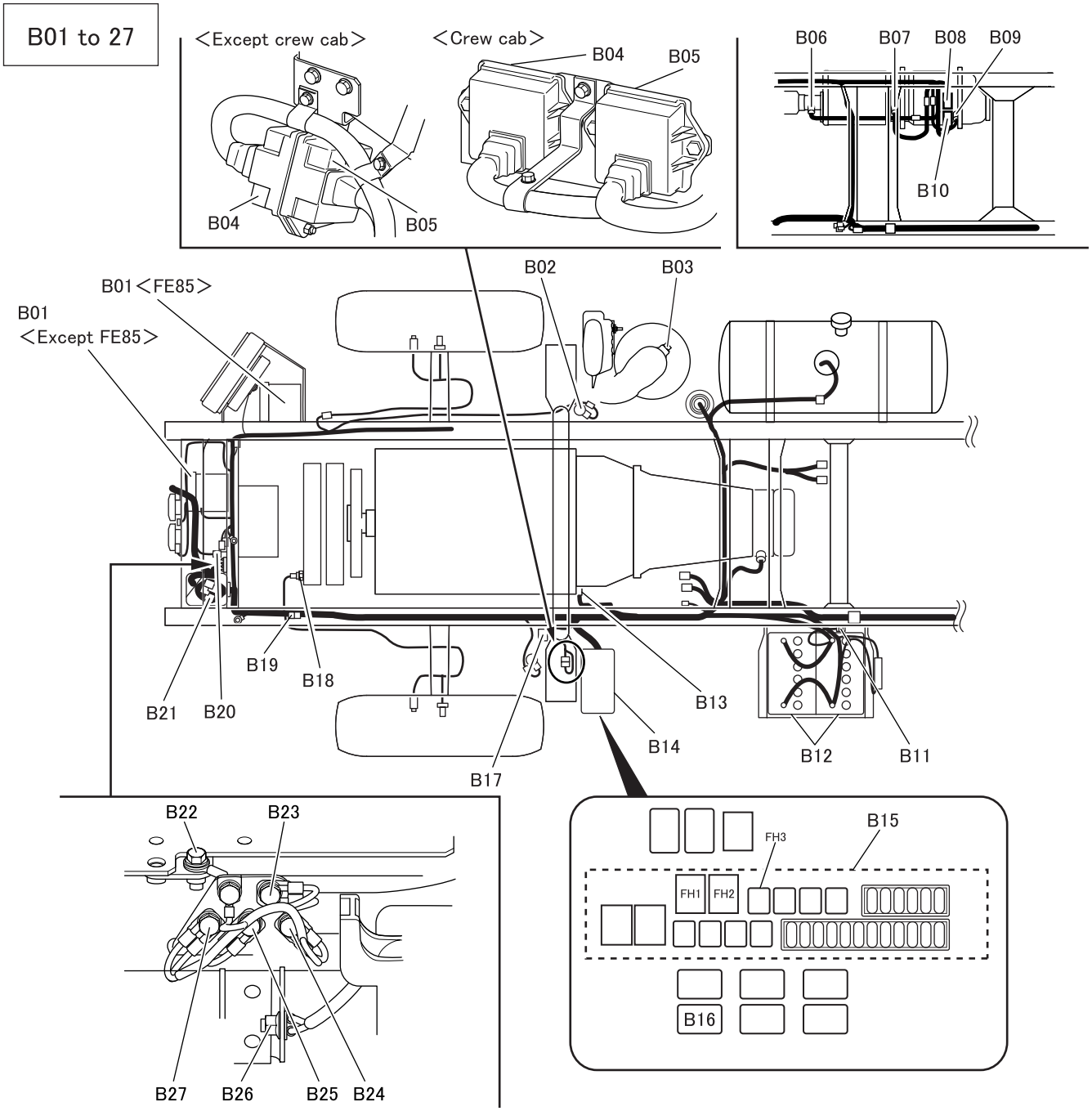

B01 Hydraulic unit (ECU)
B02 Exhaust shutter 2-way magnetic valve
B03 Air flow sensor
B04 Throttle EDU
B05 EGR EDU
B06 Catalytic temperature sensor
B07 DPF temperature sensor 1
B08 DPF absolute pressure sensor
B09 DPF temperature sensor 2
B10 DPF pressure sensor (DIFF)
B11 Ground
B12 Battery
B13 Ground
B14 High-current fuse box
B15 High-current fuse, fuse
B16 EDU relay
B17 Glow ECU ＜FE83＞
B18 Intake air temperature sensor
B19 Connection of chassis harness and engine harness
B20 Connection of cab harness and engine harness
B21 Connection of chassis harness and cab harness ＜In connector box＞
B22 Ground
B23 Ground
B24 Ground
B25 Ground
B26 Ground
B27 Ground

ECU : Electronic control unit
EDU : Electronic drive unit
EGR : Exhaust gas recirculation
DPF : Diesel particulate filter

L03383

C01 to 12

Upper view

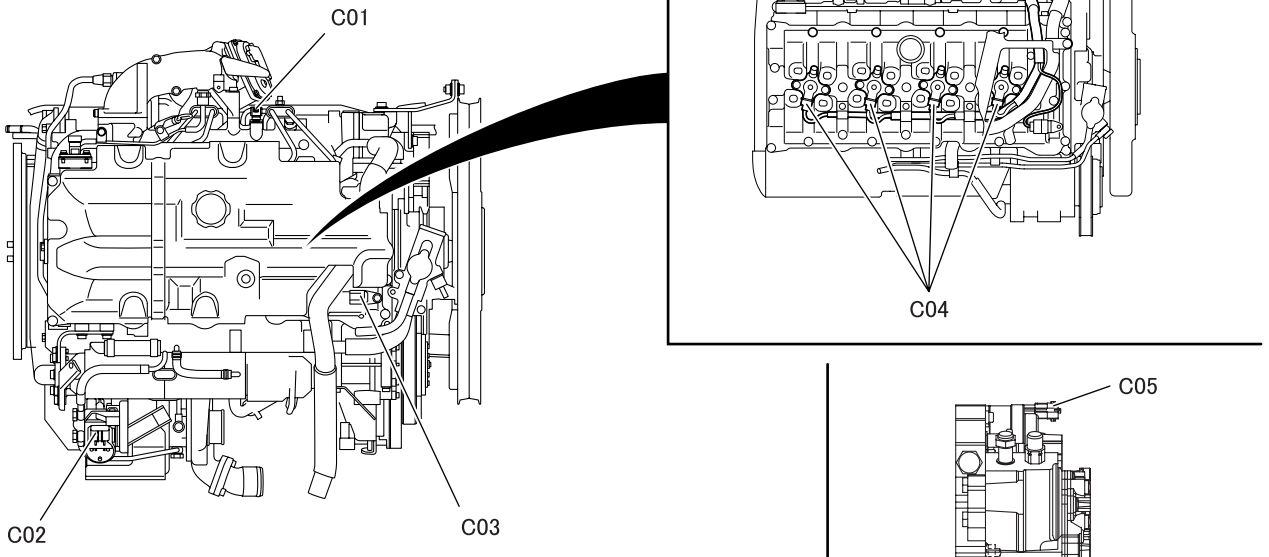

Right side view

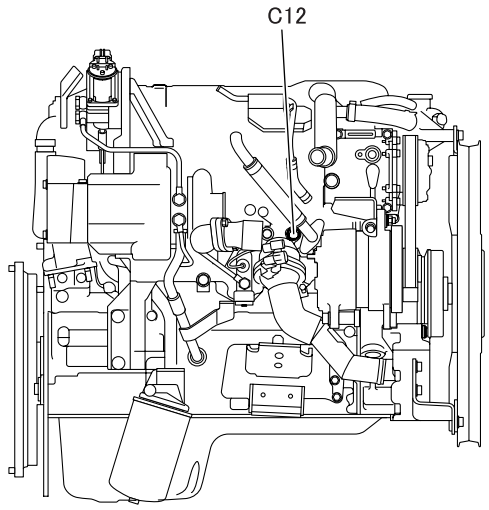

Left side view

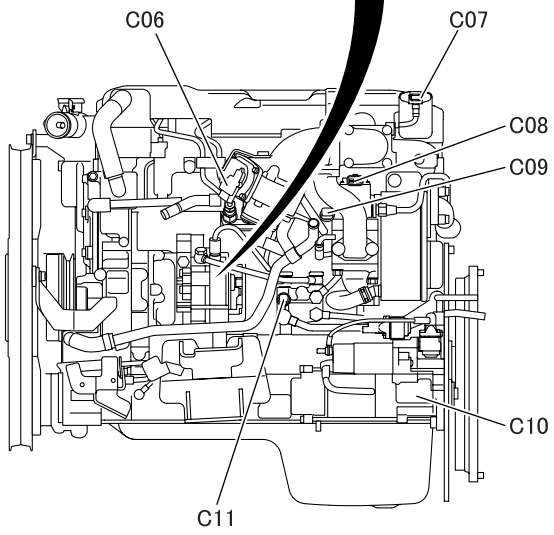

C01	Boost air temperature sensor
C02	Turbocharger actuator
C03	Cylinder recognition sensor
C04	Injector magnetic valve
C05	MPROP (Rail pressure control valve)
C06	Throttle actuator (Building into motor, position sensor)
C07	Boost pressure sensor
C08	EGR valve (Building into motor, position sensor)
C09	Common rail pressure sensor
C10	Starter
C11	Fuel temperature sensor
C12	Water temperature sensor (Connects to engine ECU)

ECU : Electronic control unit
EGR : Exhaust gas recirculation

L03384

INSTALLED LOCATIONS OF PARTS

C21 to 24

< Manual transmission >

Upper view

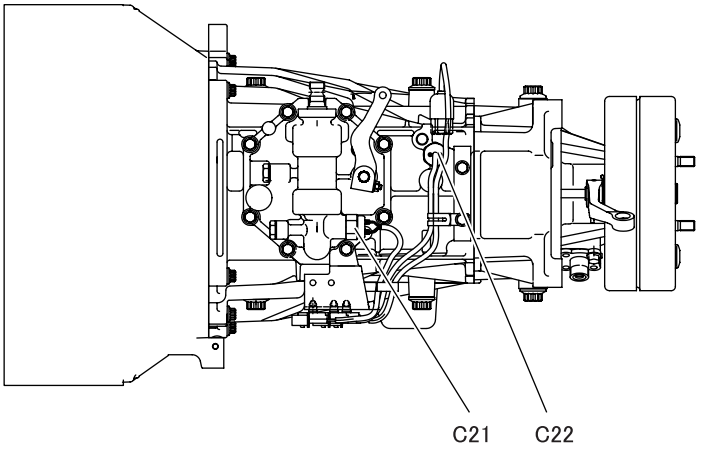

<Transfer (FG)>

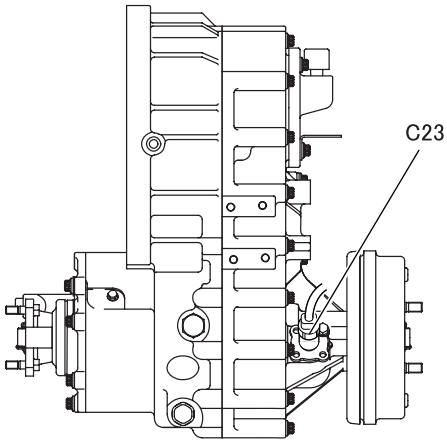

Left side view

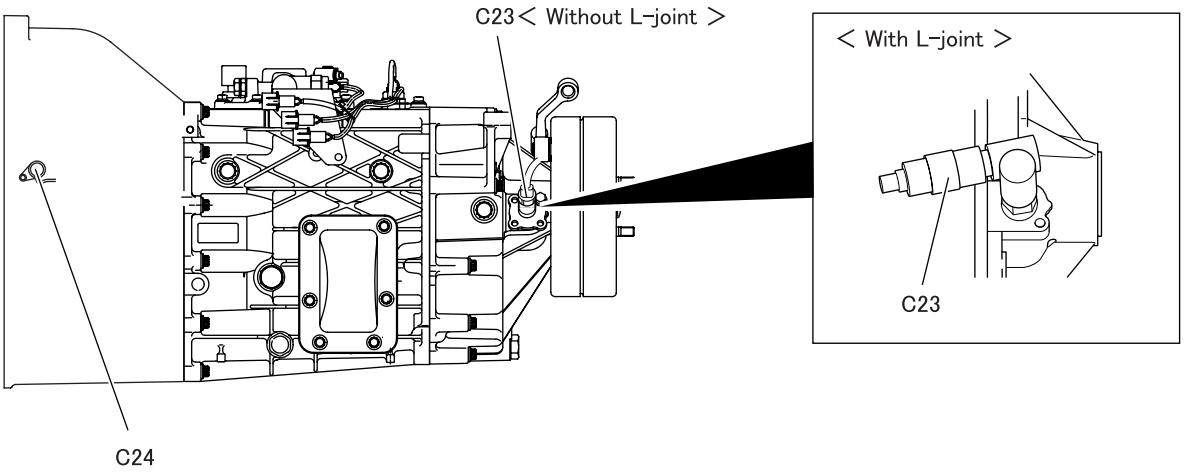

< Automatic transmission >

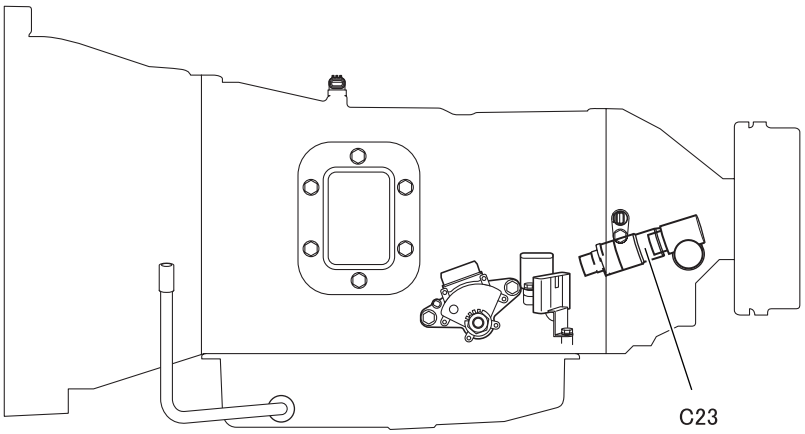

C21 Transmission neutral switch
C22 Torque limit switch
C23 Vehicle speed sensor
C24 Engine speed sensor

L03385

M E M O

ELECTRIC CIRCUIT DIAGRAM

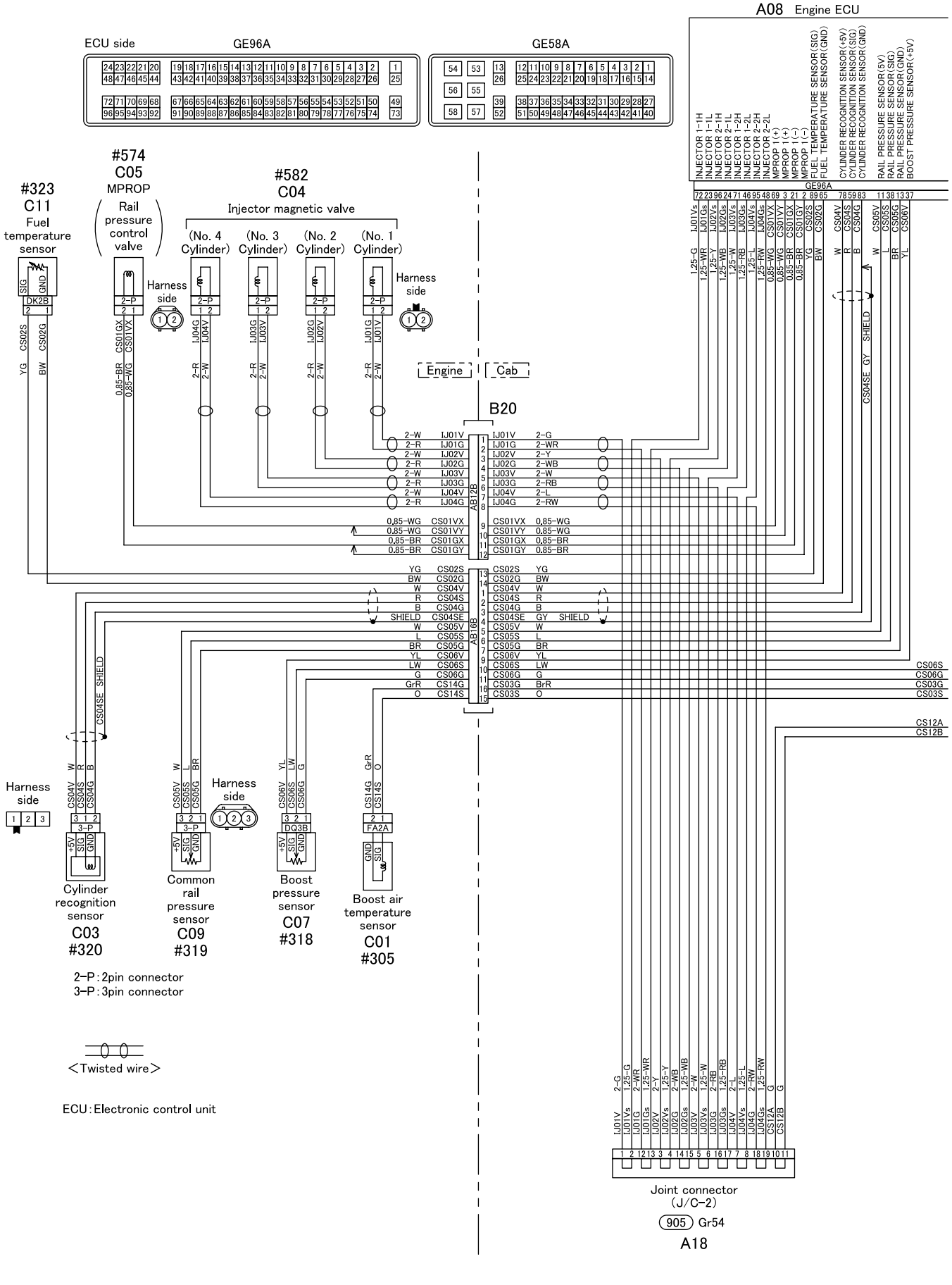

13EA-C04825-1

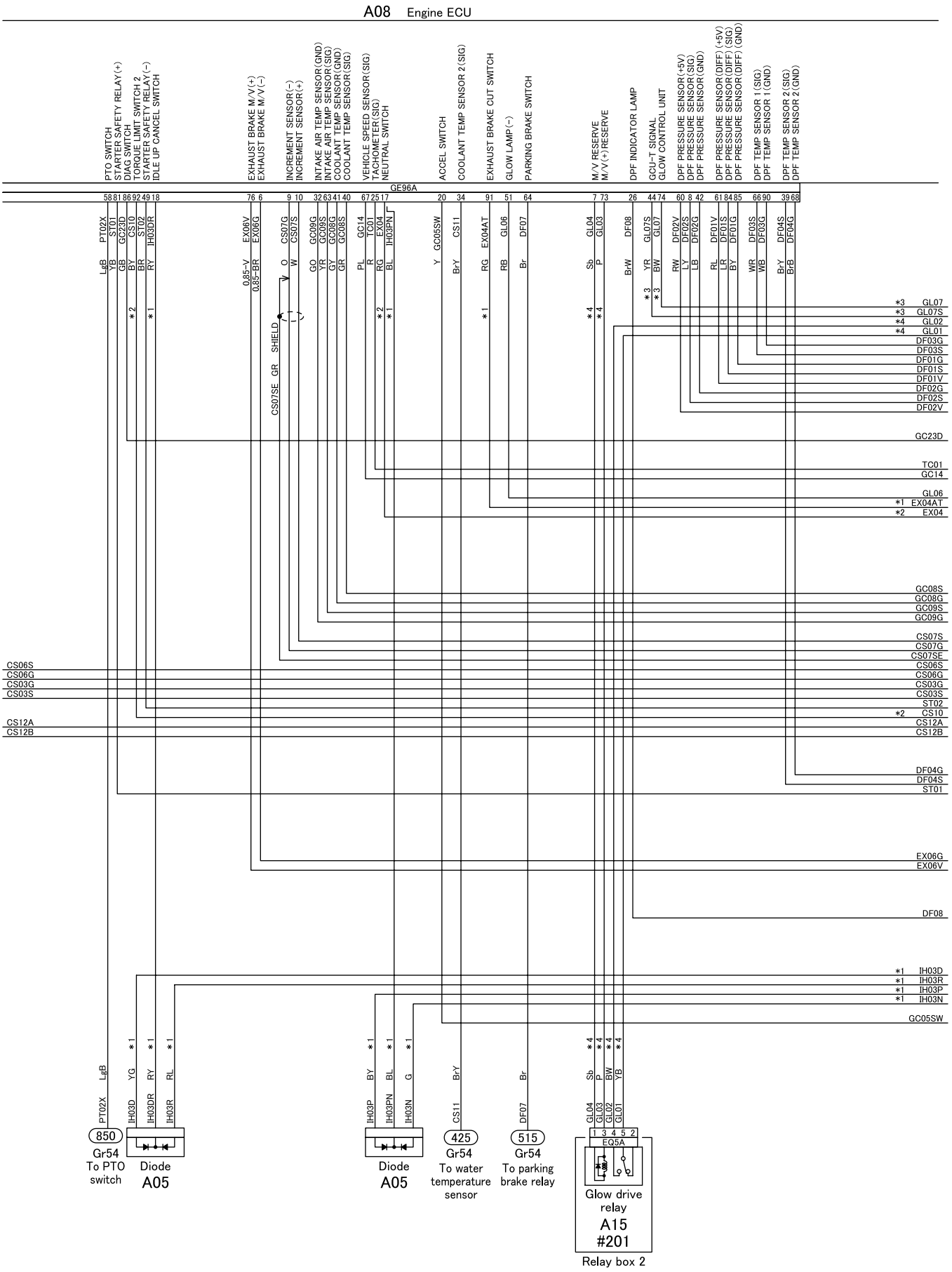
A08 Engine ECU
GE96A
PTO SWITCH
STARTER SAFETY RELAY(+)
DIAG SWITCH
TORQUE LIMIT SWITCH 2
STARTER SAFETY RELAY(-)
IDLE UP CANCEL SWITCH
EXHAUST BRAKE M/V(+)
EXHAUST BRAKE M/V(-)
INCREMENT SENSOR(-)
INCREMENT SENSOR(+)
INTAKE AIR TEMP SENSOR(GND)
INTAKE AIR TEMP SENSOR(SIG)
COOLANT TEMP SENSOR(GND)
COOLANT TEMP SENSOR(SIG)
VEHICLE SPEED SENSOR(SIG)
TACHOMETER(SIG)
NEUTRAL SWITCH
ACCEL SWITCH
COOLANT TEMP SENSOR 2(SIG)
EXHAUST BRAKE CUT SWITCH
GLOW LAMP(-)
PARKING BRAKE SWITCH
M/V RESERVE
M/V(+)RESERVE
DPF INDICATOR LAMP
GCU-T SIGNAL
GLOW CONTROL UNIT
DPF PRESSURE SENSOR(+5V)
DPF PRESSURE SENSOR(SIG)
DPF PRESSURE SENSOR(GND)
DPF PRESSURE SENSOR(DIFF)(+5V)
DPF PRESSURE SENSOR(DIFF)(SIG)
DPF PRESSURE SENSOR(DIFF)(GND)
DPF TEMP SENSOR 1(SIG)
DPF TEMP SENSOR 1(GND)
DPF TEMP SENSOR 2(SIG)
DPF TEMP SENSOR 2(GND)
Diode A05
Diode A05
To water temperature sensor
To parking brake relay
Glow drive relay
A15 #201
Relay box 2
To PTO switch

ELECTRIC CIRCUIT DIAGRAM

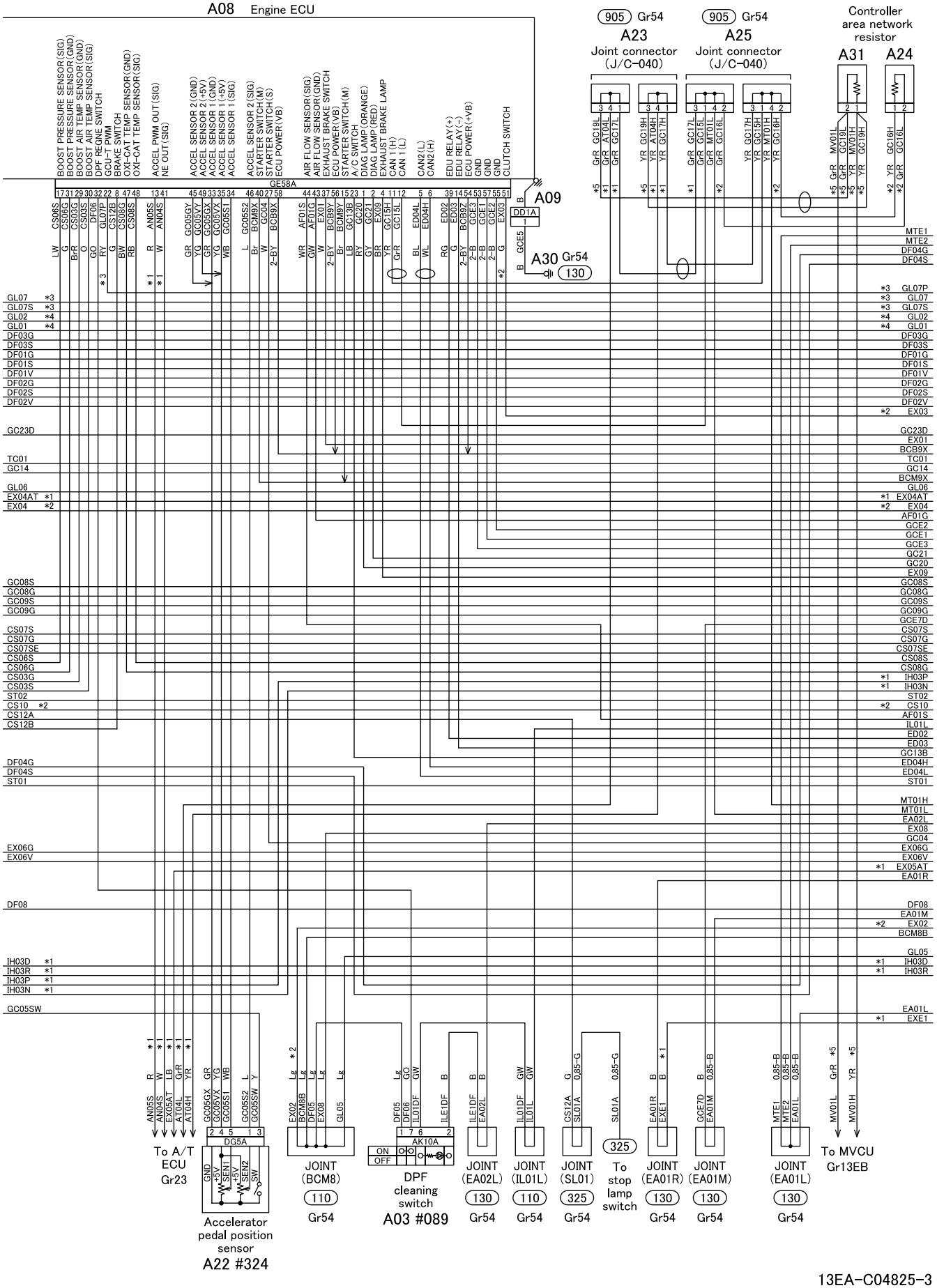

13EA-C04825-3

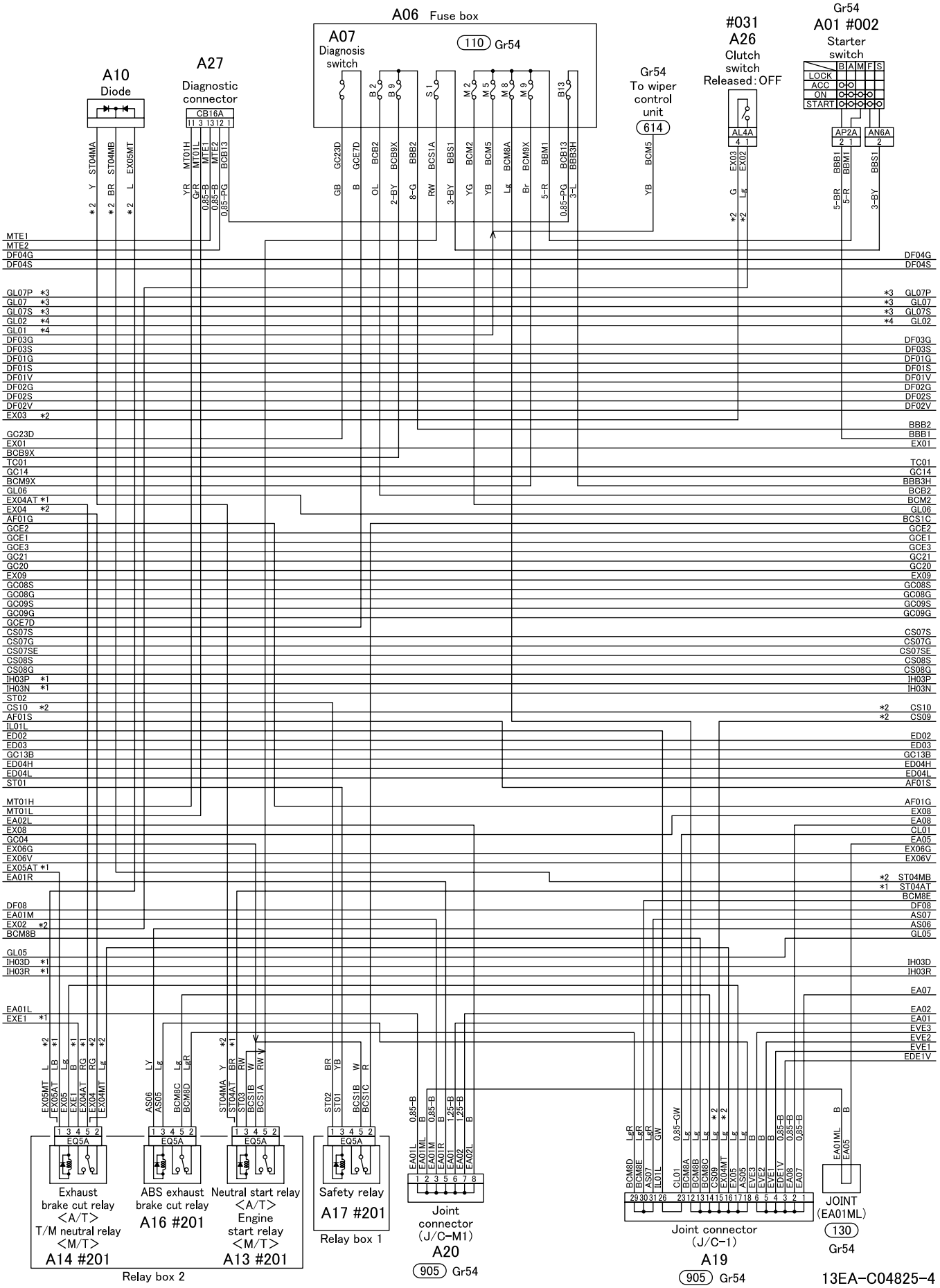
A06 Fuse box
A07 Diagnosis switch
110 Gr54
A10 Diode
A27 Diagnostic connector
CB16A
Gr54 To wiper control unit
614
#031 A26 Clutch switch Released : OFF
AL4A
Gr54 A01 #002 Starter switch
LOCK
ACC
ON
START
AP2A
AN6A
Exhaust brake cut relay <A/T> T/M neutral relay <M/T> A14 #201
ABS exhaust brake cut relay A16 #201
Neutral start relay <A/T> Engine start relay <M/T> A13 #201
Relay box 2
Safety relay A17 #201
Relay box 1
Joint connector (J/C-M1) A20 905 Gr54
Joint connector (J/C-1) A19 905 Gr54
JOINT (EA01ML) 130 Gr54
13EA-C04825-4

ELECTRIC CIRCUIT DIAGRAM

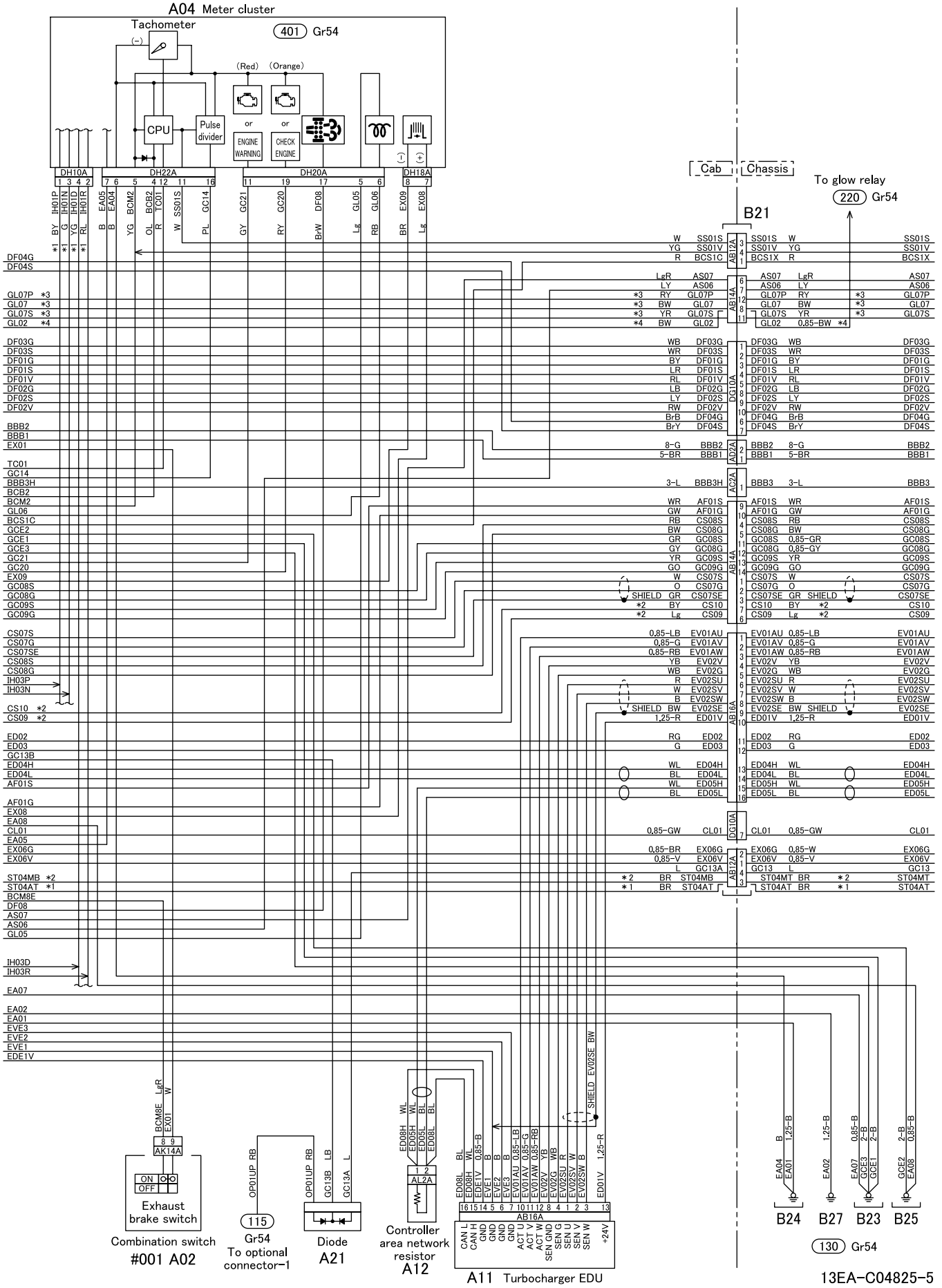

Group 13EB

Auto Cruise and Vehicle Speed Limitation System

Table of Contents

Back

Home

MITSUBISHI FUSO TRUCK OF AMERICA, Inc.

Pub.No.TWSE0805-13EB

INDEX

STRUCTURE AND OPERATION

1. General Description 13EB-2
2. Electronic Control System 13EB-2
3. Electronic Control Unit Connection Diagram 13EB-6

TROUBLESHOOTING

1. Diagnosis Procedure 13EB-8
2. Diagnostic Precautions 13EB-9
3. Inspection Based on Diagnosis Codes 13EB-10
4. Multi-Use Tester Service Data 13EB-14
5. Actuator Tests Performed Using Multi-Use Tester 13EB-15
6. Works Required When Replacing the Multifunction Vehicle Control Unit (MVCU) 13EB-15
7. Inspections Performed at Electronic Control Unit Connectors 13EB-16

INSPECTION OF ELECTRICAL EQUIPMENT 13EB-17

INSTALLED LOCATIONS OF PARTS 13EB-18

ELECTRIC CIRCUIT DIAGRAM 13EB-22

1. General Description

- The MVCU (Multi function Vehicle Control Unit) is an integrated electronic control unit which has the following functions:
  - Auto cruise function
  - Vehicle speed limiting (SLD) function <Configurable for vehicles with automatic transmission (except Crew-cab models)>
- For these functions, MVCU receives the sensor and switch information from other ECUs via CAN communication system.
- In the auto cruise function, the target vehicle speed is set using the main switch, set switch and resume switch, and the MVCU maintains the set speed by controlling the engine.
- The vehicle speed limiting (SLD) function is designed to send output signals to the engine ECU to restrict the maximum vehicle speed to a preset speed limit regardless of the accelerator pedal operation when the vehicle speed reaches the speed limit on flat or uphill road.
  This vehicle speed limiting (SLD) function is inactive in the initial setting of MVCU. To activate this, consult your nearest MITSUBISHI FUSO dealer or MITSUBISHI FUSO TRUCK OF AMERICA, Inc.
- The MVCU also has the self-diagnosis function to diagnose major components and warns the driver if any abnormality is found.

2. Electronic Control System

2.1 System block diagram

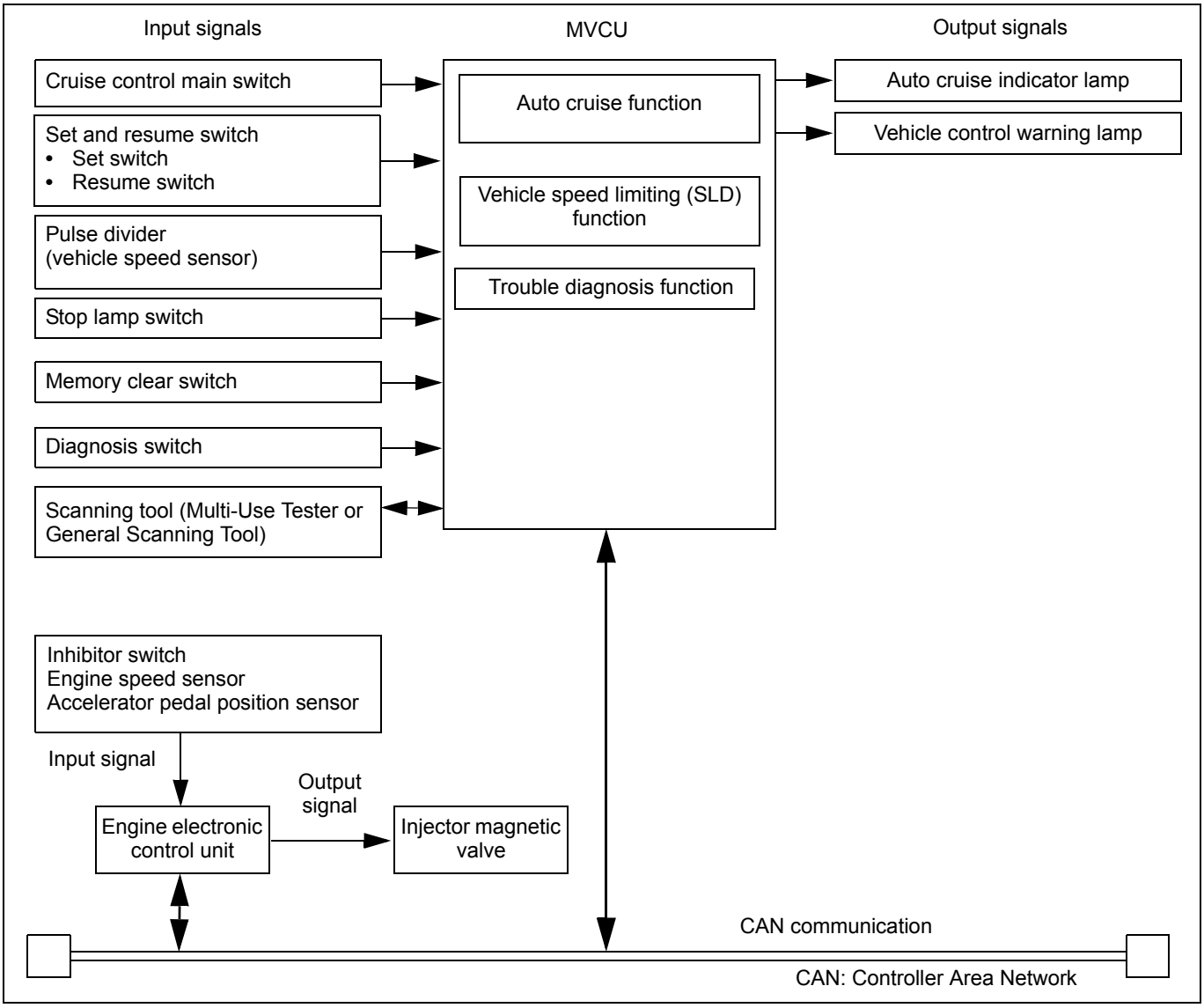

Part name	Function/operation
Cruise control main switch	ON-OFF control of auto cruise system
Set switch	Selection and change of desired cruising speed
Resume switch	Resumption and change of canceled cruising speed
Pulse divider (vehicle speed sensor)	Detection of vehicle speed
Stop lamp switch	Detection of brake pedal depression (lamp lit on pedal being pressed)
Memory clear switch	Clearing of existing diagnosis code, output of earlier diagnosis codes
Diagnosis switch	Output of diagnosis codes
Scanning tool (Multi-Use Tester or General Scanning Tool)	Communication between scanning tool (Multi-Use Tester or General Scanning Tool) and MVCU
Auto cruise indicator lamp	Indication of system in operation
Vehicle control warning lamp	Indication of system failure
CAN communication (engine electronic control unit)	MVCU outputs recognized vehicle data on CAN so that engine electronic control unit receives necessary data for control. Engine electronic control unit outputs necessary signals to MVCU for appropriate control of individual systems.

2.2 Auto cruise function

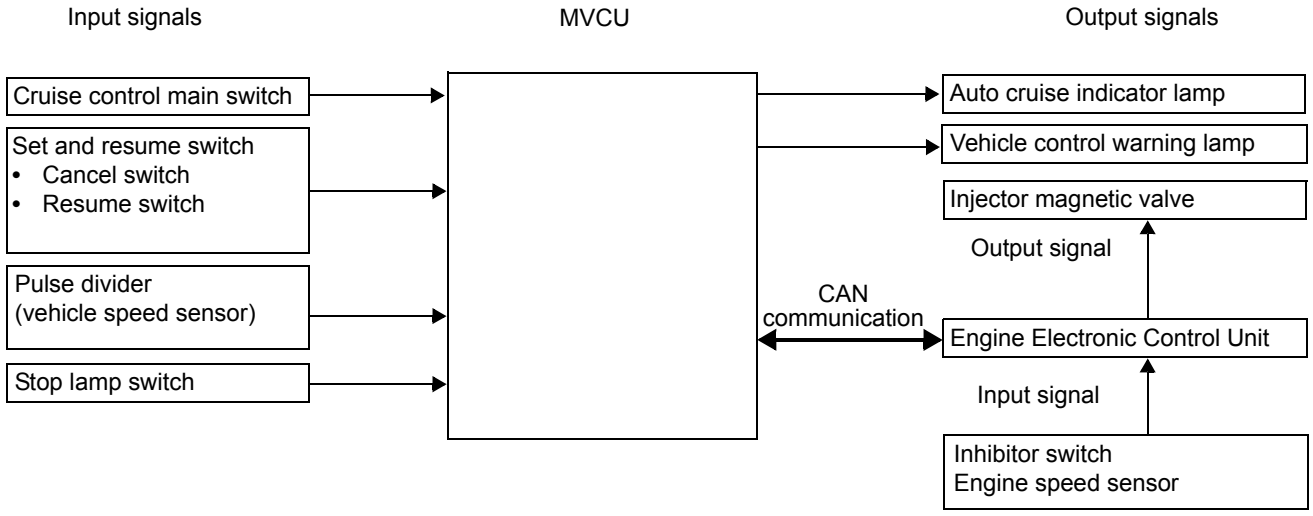

- In the auto cruise function, the target vehicle speed is set using the main switch, set switch and resume switch, and the MVCU maintains the set speed by controlling the engine.

(1) Setting the auto cruise function

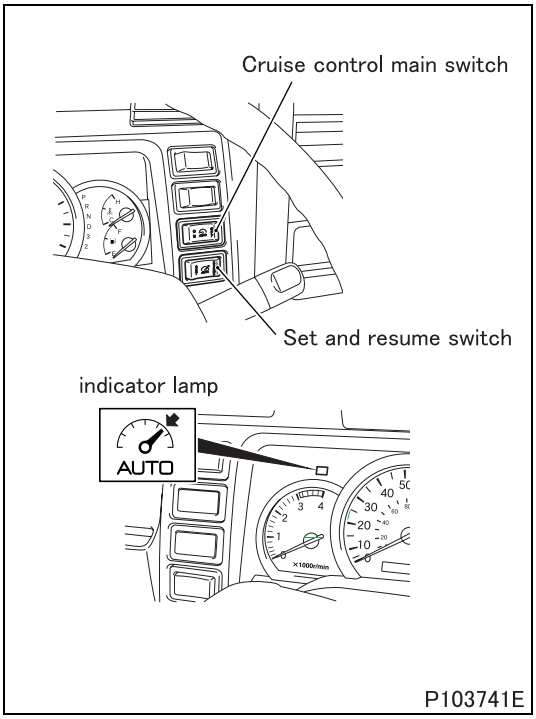

- The operation of the auto cruise function using the set and resume switch is as follows:

(1.1) Setting condition

- To activate the auto cruise function, the following condisitons should be met:
  - Shift lever is in 4th or higher gear position.
  - Vehicle speed is increased to approx. 40 km/h {25 MPH} or higher.
  - The cruise control main switch is in ON position.
  - The brake pedals are released.

(1.2) Set switch ("SET" side of the set and resume switch)

- This switch is used to set or change the target vehicle speed.

Setting the vehicle speed

- Accelerate to a desired speed using the accelerator pedal.
- In this condition, press and release the set switch. The target vehicle speed is set when the switch is released and the auto cruise indicator lamp illuminates.

Lowering the set speed

- During auto cruise driving, pressing the set switch decelerates the vehicle speed. Press the set switch to lower the vehicle speed and, when the speed lowers to a desired speed, release the set switch. A new target vehicle speed is set at that moment.

Raising the set speed

- Press the accelerator pedal and raise the vehicle speed. When the desired speed is reached, press and release the set switch. A new target vehicle speed is set at that moment.

(1.3) Resume switch ("RESUME" side of the set and resume switch)

- This switch is used to resume the auto cruise control when the control is temporarily disengaged or to change the target vehicle speed.

Resuming the auto cruise control (target speed)

- During auto cruise driving when the control has temporarily disengaged due to braking or other reason, press and release the resume switch. The auto cruise control is reengaged and it regulates the vehicle speed to a former target speed.

Raising the set speed

- During auto cruise driving, pressing the resume switch accelerates the vehicle speed. Press the resume switch to raise the vehicle speed and, when the speed rises to a desired speed, release the resume switch. A new target vehicle speed is set at that moment.

(2) Disengaging the auto cruise control

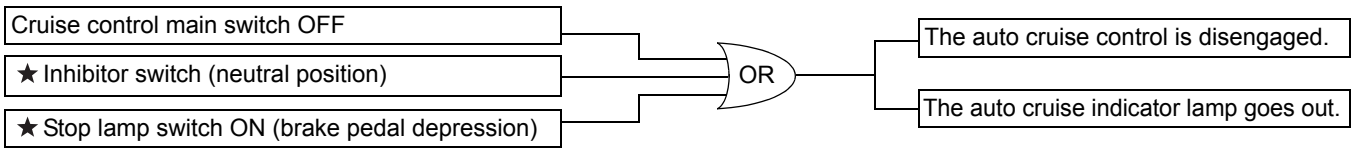

The condition marked ★ disengages the auto cruise control temporarily.

2.3 Vehicle speed limiting (SLD) function

- This vehicle speed limiting (SLD) function is inactive in the initial setting of MVCU.
- To activate this function, ask your nearest MITSUBISHI FUSO dealer or MITSUBISHI FUSO TRUCK OF AMERICA, Inc.

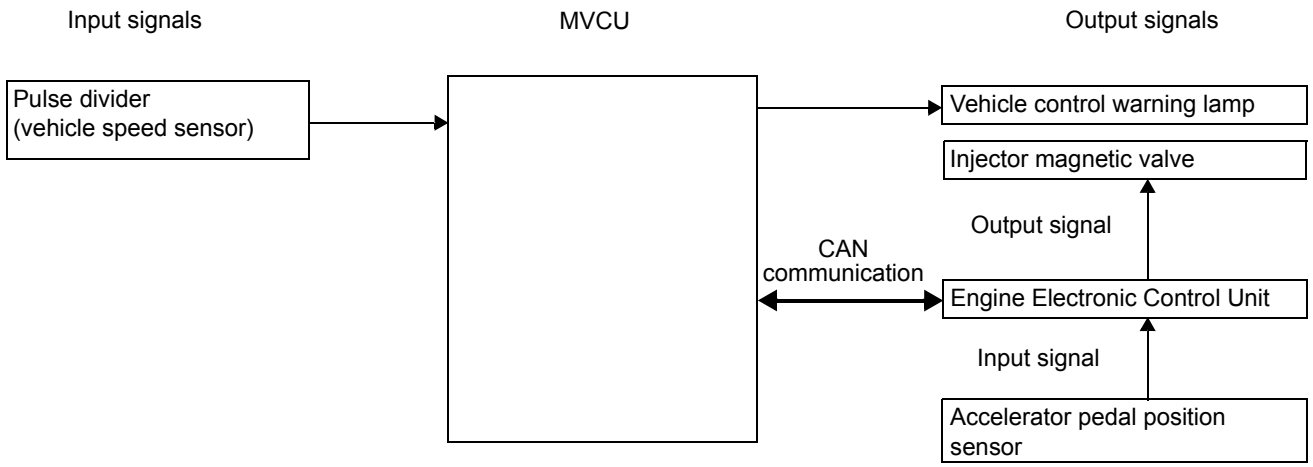

- The vehicle speed limiting (SLD) function is designed to send output signals to the engine ECU to restrict the maximum vehicle speed to a preset speed limit regardless of the accelerator pedal operation when the vehicle speed reaches the speed limit on flat or uphill road.

2.4 Trouble diagnosis function

- The system constantly performs trouble diagnosis to determine if various sensors, etc. malfunction when the starter switch is ON. When a failure is detected, trouble information is indicated on the meter cluster to inform the driver to that effect. At the same time, the location of the trouble is stored in memory as a diagnosis code to start restricted in-trouble control.
- While in trouble, the system's control functions are restricted to ensure safety of the vehicle and its driver. Diagnosis codes stored in memory can be retrieved on the Multi-Use Tester or through blinking warning lamp.
- Diagnosis codes are different in kind between the Multi-Use Tester and blinking warning lamp.

3. Electronic Control Unit Connection Diagram

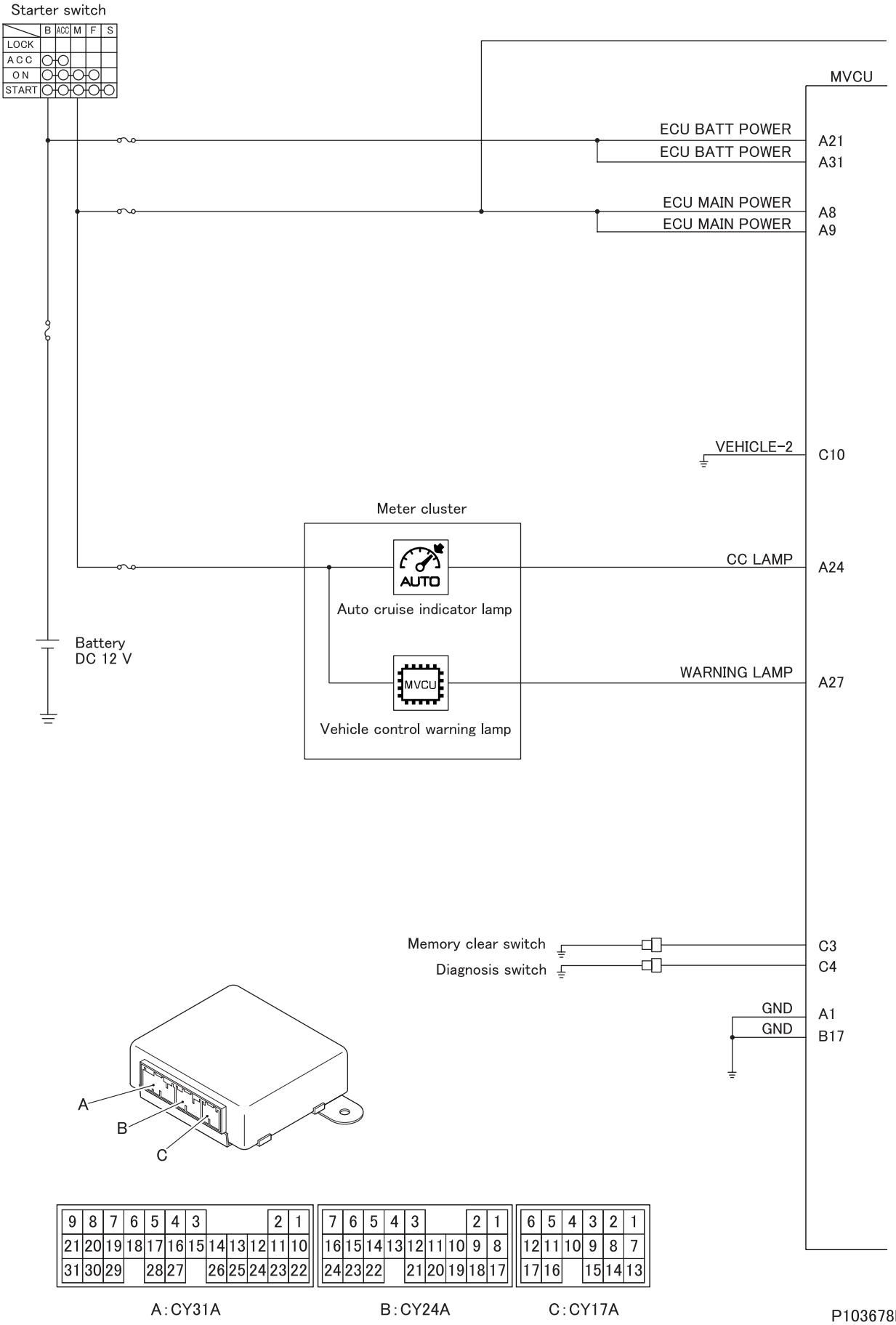

P103678E-1

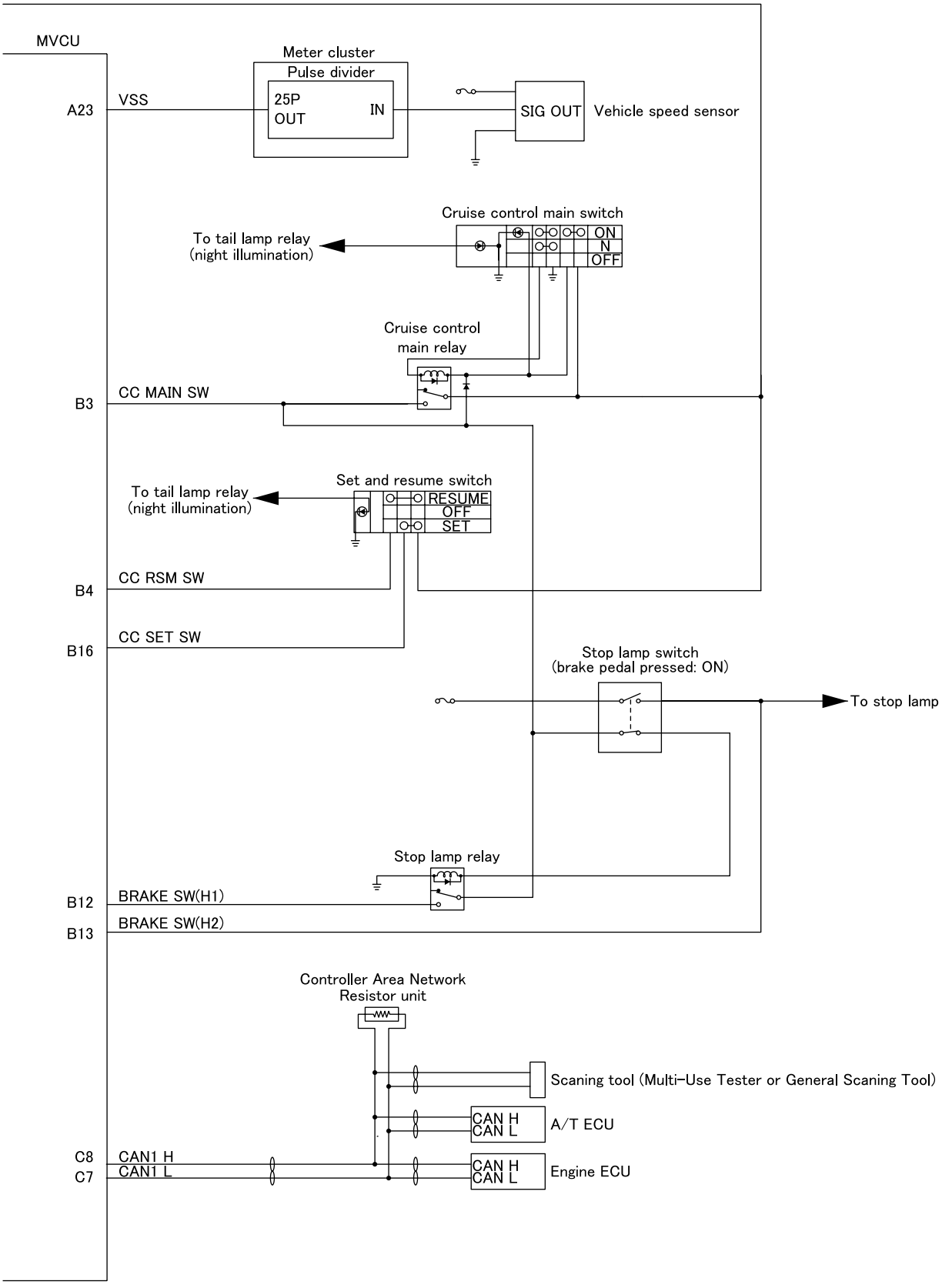
MVCU
Meter cluster
Pulse divider
A23
VSS
25P
OUT
IN
SIG OUT
Vehicle speed sensor
Cruise control main switch
To tail lamp relay
(night illumination)
ON
N
OFF
Cruise control
main relay
B3
CC MAIN SW
Set and resume switch
To tail lamp relay
(night illumination)
RESUME
OFF
SET
B4
CC RSM SW
B16
CC SET SW
Stop lamp switch
(brake pedal pressed: ON)
To stop lamp
Stop lamp relay
B12
BRAKE SW(H1)
B13
BRAKE SW(H2)
Controller Area Network
Resistor unit
Scaning tool (Multi-Use Tester or General Scaning Tool)
CAN H
CAN L
A/T ECU
C8
CAN1 H
C7
CAN1 L
CAN H
CAN L
Engine ECU

P103678E-2

1. Diagnosis Procedure

- Perform the inspection in accordance with the following flowchart.

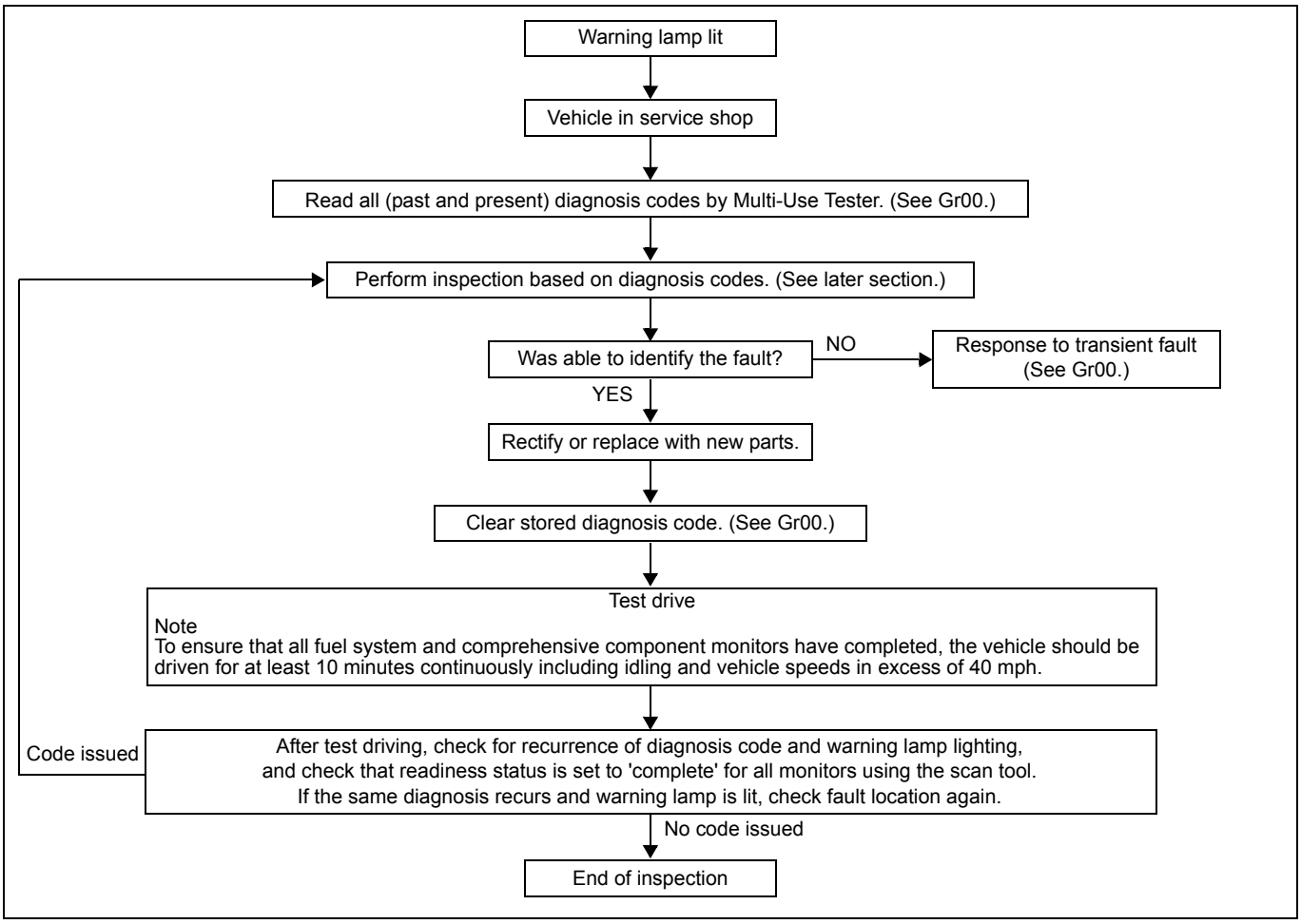

2. Diagnostic Precautions

- Before measuring voltage, check the battery for charged condition and specific gravity. If system inspection is performed with the battery uncharged or reduced in specific gravity, accurate measurements cannot be achieved.
- Before disconnecting battery cables, harnesses and connectors, set the starter switch to LOCK or OFF, then allow at least 20 seconds.
- To avoid having electrical parts damaged, set the starter switch and lighting switch to LOCK or OFF before reconnecting battery cables, harnesses and connectors.
- When performing measurement with the tester, handle the test bar carefully so that it does not damage internal circuit and other electrical parts of the electronic control unit to result in a short-circuit failure between terminals in connector or between connector and car body.
- Resistance is affected by temperature. Determine the necessity of resistance measurement following given temperature specification as a guide. Otherwise, use normal temperature (10 to 35°C {50 to 95°F}) as the measuring condition.
- If the MVCU is replaced with a new one, some data must be registered in the new MVCU for proper multifunction vehicle control. This also applied to the case when replacing the MVCU with the one that has been used in other vehicle. (See “6. Works Required When Replacing the Multifunction Vehicle Control Unit (MVCU)”.)

3. Inspection Based on Diagnosis Codes

3.1 List of diagnosis codes

NOTE

- **Diagnosis codes are different in kind between the Multi-Use Tester and blinking warning lamp.**
- **The Multi-Use Tester issues diagnosis codes that tell more in detail.**

Code	Message	Warning lamp blinking
–	OK	01
P0500	Vehicle Speed Sensor	06
P0504	Brake SW	11
P1002	Battery Voltage	02
P1003	Battery Terminal	03
P1004	Main Voltage	04
P1007	MVCU	07
P1008	Vehicle Identification	08
P1009	Non Coding	09
P1016	Cruise Variation Identify	16
U0100	CAN Communication	05
U1013	Engine ECU Cruise Control	13
U1031	Engine ECU Speed Limiting	31

3.2 Diagnosis code generation conditions and inspection items

P0500: Vehicle Speed Sensor (Warning lamp: 06)

Generation condition		Engine speed at 1000 rpm or higher, clutch pedal released, transmission neutral switch in ON position and the vehicle speed at 0.75 km/h {0.47 MPH} or lower.
Recoverability		System recovers (power is re-supplied to electronic control unit) if signal becomes normal when starter switch is turned OFF → ON.
Control effected by electronic control unit		• Auto cruise control and vehicle speed limiting (SLD) control is suspended. • Occurrence of trouble with vehicle speed limiting function sent through CAN bus.
Inspection	Service data	03: Vehicle Speed
	Electronic control unit connector	01: Vehicle speed sensor
	Electrical equipment	#265: Vehicle speed sensor
	Electric circuit diagram	Vehicle sensor system

P0504: Brake SW (warning lamp: 11)

Generation condition		Stop lamp switch (H1, H2) signals are not identical.
Recoverability		System recovers (power is re-supplied to electronic control unit) if signal becomes normal when starter switch is turned OFF → ON.
Control effected by electronic control unit		• Auto cruise control is suspended. • Vehicle speed limiting (SLD) control is continued.
Inspection	Service data	24: Brake SW 1, 25: Brake SW 2
	Electronic control unit connector	02: Stop lamp switch
	Electrical equipment	#042: Stop lamp switch
	Electric circuit diagram	Stop lamp system

P1002: Battery Voltage (Warning lamp: 02)

Generation condition		MVCU power terminal (direct from battery) voltage is lower than 10 V for approx. 10 seconds.
Control effected by electronic control unit		Auto cruise control and vehicle speed limiting (SLD) control is continued.
Inspection	Service data	01: Power Supply Voltage (BATTERY)
	Electric circuit diagram	Power supply system
	Other	• Battery (See Gr54.) • Alternator (See Gr54.)

P1003: Battery Terminal (Warning lamp: 03)

Generation condition		MVCU power terminal (direct from battery) voltage is lower than 4 V for approx. 5 seconds.
Control effected by electronic control unit		Auto cruise control and vehicle speed limiting (SLD) control is continued.
Inspection	Service data	01: Power Supply Voltage (BATTERY)
	Electric circuit diagram	MVCU connector (CY31A) terminal No. 21 and No. 31 system
	Other	Battery (See Gr54.)

P1004: Main Voltage (Warning lamp: 04)

Generation condition		MVCU power terminal (starter switch ON) voltage is lower than 10 V for approx. 10 seconds.
Control effected by electronic control unit		Auto cruise control and vehicle speed limiting (SLD) control is continued.
Inspection	Service data	02: Power Supply Voltage (MAIN)
	Electric circuit diagram	Starter switch (M terminal) system
	Other	• Battery (See Gr54.) • Alternator (See Gr54.)

P1007: MVCU (Warning lamp: 07)

Generation condition		Faulty CPU (processor) in MVCU
Recoverability		System recovers (power is re-supplied to electronic control unit) if signal becomes normal when starter switch is turned OFF → ON.
Control effected by electronic control unit		• Auto cruise control and vehicle speed limiting (SLD) control is suspended. • Occurrence of trouble with vehicle speed limiting function sent through CAN bus.
Inspection	Other	Malfunction vehicle control unit proper

P1008: Vehicle Identification (Warning lamp: 08)

Generation condition		Identification start condition continued for predetermined time after starting the vehicle identification but the vehicle identification remained unidentified.
Recoverability		System recovers (power is re-supplied to electronic control unit) if signal becomes normal when starter switch is turned OFF → ON.
Control effected by electronic control unit		• Auto cruise control and vehicle speed limiting (SLD) control is suspended. • Occurrence of trouble with vehicle speed limiting function sent through CAN bus.
Inspection	Service data	13: Cruise Variation Number
	Electric circuit diagram	Write data in MVCU. (Refer to “Works Required When Replacing the Multifunction Vehicle Control Unit (MVCU)”.)

P1009: Non Coding (Warning lamp: 09)

Generation condition		Data has not written in MVCU.
Recoverability		System recovers after writing data in MVCU.
Control effected by electronic control unit		• Auto cruise control and vehicle speed limiting (SLD) control is suspended. • Occurrence of trouble with vehicle speed limiting function sent through CAN bus.
Inspection	Other	Write data in MVCU. (Refer to “Works Required When Replacing the Multifunction Vehicle Control Unit (MVCU)”.)

P1016: Cruise Variation Identify (Warning lamp: 16)

Generation condition		The vehicle identification and auto cruise control do not match.
Recoverability		System recovers (power is re-supplied to electronic control unit) if signal becomes normal when starter switch is turned OFF → ON.
Control effected by electronic control unit		• Auto cruise control is suspended. • Vehicle speed limitting (SLD) control is continued.
Inspection	Service data	13: Cruise Variation Number
	Other	Write data in MVCU. (Refer to “Works Required When Replacing the Multifunction Vehicle Control Unit (MVCU)”.)

U0100: CAN Communication (Warning lamp: 05)

Generation condition		No CAN data is received from the engine electronic control unit for approx. 2 seconds.
Recoverability		System recovers (power is re-supplied to electronic control unit) if signal becomes normal when starter switch is turned OFF → ON.
Control effected by electronic control unit		• Auto cruise control and vehicle speed limiting (SLD) control is suspended. • Occurrence of trouble with vehicle speed limiting function sent through CAN bus.
Inspection	Electrical equipment	CAN communication system

U1013: Engine ECU Cruise Control (Warning lamp: 13)

Generation condition		When either condition is met. ① : The vehicle speeds recognized by Multifunction Vehicle Control Unit (MVCU) and by engine electronic control unit do not match for 2 seconds. ② : Faulty auto cruise control function under the engine electronic control unit is noticed through CAN communication.
Recoverability		System recovers (power is re-supplied to electronic control unit) if signal becomes normal when starter switch is turned OFF → ON.
Control effected by electronic control unit		• Auto cruise control is suspended. • Vehicle speed limitting (SLD) control is continued.
Inspection	Electronic control unit connector	01: Vehicle speed sensor
	Electrical equipment	#265: Vehicle speed sensor
	Electric circuit diagram	Engine electronic control unit and Multifunction Vehicle Control Unit (MVCU) CAN communication system
	Other	Engine electronic control unit

U1031: Engine ECU SPEED Limiting (Warning lamp: 31)

Generation condition		When either condition is met. ① : The vehicle speeds recognized by Multifunction Vehicle Control Unit (MVCU) and by engine electronic control unit do not match for 2 seconds. ② : Faulty vehicle speed limiting function under the engine electronic control unit is noticed through CAN communication.
Recoverability		System recovers (power is re-supplied to electronic control unit) if signal becomes normal when starter switch is turned OFF → ON.
Control effected by electronic control unit		• Auto cruise control is continued. • Vehicle speed limiting (SLD) control is suspended. • Occurrence of trouble with vehicle speed limiting function sent through CAN bus.
Inspection	Electronic control unit connector	01: Vehicle speed sensor
	Electrical equipment	#265: Vehicle speed sensor
	Electric circuit diagram	Engine electronic control unit and Multifunction Vehicle Control Unit (MVCU) CAN communication system
	Other	Engine electronic control unit

4. Multi-Use Tester Service Data

NOTE

- **Both service data and actuator test results are indicated at the same time.**

No.	Item	Data	Inspection condition	Criterion for normality
01	Power Supply Voltage (BATTERY)	■■.■■ V	Starter switch in ON position	8 to 16 V
02	Power Supply Voltage (MAIN)	■■.■■ V	Starter switch in ON position	8 to 16 V
03	Vehicle Speed	■■■■.MPH	When driving	Synchronous with speedometer
04	Vehicle Speed (Engine Electronic Control Unit)	■■■■.MPH	When driving	Synchronous with speedometer
05	Accel Pedal Position	■■■.■ %	Released	0%
			Gradually pressed	Gradually rising
			Fully pressed	100%
06	Engine Speed	■■■■.rpm	Racing (with engine running)	Synchronous with tachometer
07	Engine Variation ID	■■■■.	Starter switch in ON position	200: 4M50T7 205: 4M50T8
08	Cruise Control Set Speed	■■■■.MPH	During auto cruise driving on a flat road	Equal to vehicle speed in auto cruise mode
12	Limit Vehicle Speed	■■■■.MPH	Vehicle speed limiting function activates with the accelerator pedal pressed	Around limit speed
13	Cruise Variation Number	1/2/3/4/5/6/7/8/9/10/11/12/NON	Starter switch in ON position	Recongnized as “2” (with auxiliary brake non-linked cruise function) through the information record feature of MVCU
21	Neutral SW	Neutral/shift	Transmission in neutral	Neutral
			Transmission in other gear than neutral	Shift
24	Brake SW 1	ON/OFF	Brake pedal pressed	ON
			Brake pedal released	OFF
25	Brake SW 2	ON/OFF	Brake pedal pressed	ON
			Brake pedal released	OFF
29	Cruise Main SW	ON/OFF	Cruise control main switch ON	ON
			Cruise control main switch OFF	OFF
30	Cruise Set SW	ON/OFF	Set and resume switch SET	ON
			Set and resume switch OFF	OFF
31	Cruise Resume SW	ON/OFF	Set and resume switch RESUME	ON
			Set and resume switch OFF	OFF
34	Diagnosis SW	ON/OFF	Diagnosis switch ON (fuse connected)	ON
			Diagnosis switch OFF (fuse disconnected)	OFF
35	Memory Clear SW	ON/OFF	Memory clear switch ON (fuse connected)	ON
			Memory clear switch OFF (fuse disconnected)	OFF

No.	Item	Data	Inspection condition	Criterion for normality
41	Cruise Lamp	ON/OFF	Auto cruise mode	ON
			Normal driving	OFF
			[Actuator test] 51: Cruise Lamp ON 52: Cruise Lamp OFF	
43	System Warning Lamp	ON/OFF	Starter switch in ON position (engine not started)	ON for some seconds
			[Actuator test] 55: System Warning Lamp ON 56: System Warning Lamp OFF	

5. Actuator Tests Performed Using Multi-Use Tester

NOTE

- **Both service data and actuator test results are indicated at the same time.**

No.	Item	Description	Check method
51	Cruise Lamp ON	Auto cruise indicator lamp drive signal	Lighting status of auto cruise indicator lamp [Service data] 41: Cruise Lamp
52	Cruise Lamp OFF		
55	System Warning Lamp ON	Vehicle control warning lamp drive signal	Lighting status of vehicle control warning lamp [Service data] 43: System Warning Lamp
56	System Warning Lamp OFF		

6. Works Required When Replacing the Multifunction Vehicle Control Unit (MVCU)

- When replacing the MVCU with a new one, it is necessary to write the vehicle specification identification data and necessary control parameters for softwares in the new MVCU. Otherwise the system cannot operate correctly, resulting in faulty system.
- For data writing operation, ask your nearest MITSUBISHI FUSO dealer or MITSUBISHI FUSO TRUCK OF AMERICA, Inc.

7. Inspections Performed at Electronic Control Unit Connectors

- These inspections aid troubleshooting by enabling you to check whether electronic control unit signals are being correctly transmitted via the vehicle harness and connectors.
  The white-on-black numbers (01, 02 and so on) correspond to the similarly printed reference numbers in section "**3. Inspection Based on Diagnosis Codes**".

7.1 Electronic control unit connector terminal arrangement

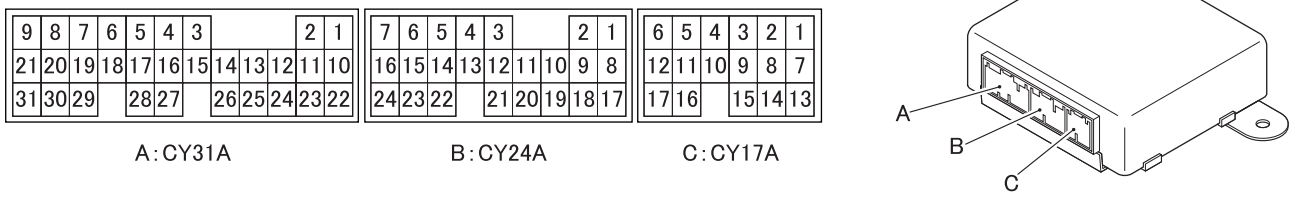

P101774

7.2 Inspection procedure

CAUTION ⚠

- **Depending on check items, checking is performed with connector disconnected or left connected.**
- **Be sure to not touch any other connector terminal than involved in the check. Use extra care so that connector terminals are not shorted by the tester.**

Check item	Check method
01 Vehicle speed sensor signal voltage	[Conditions] • Starter switch is in ON position. • Vehicle-side harness is left connected (checked from behind the connector.) • Wheels are slowly rotated using chassis dynamo or the like. [Criteria] Between terminals (+) - (–): A23-chassis grounding • High pulse voltage: Approx. 8 ± 1 V • Low pulse voltage: 0.5 V or less
02 Stop lamp switch continuity	<Switch (H1)> [Conditions] • Starter switch in ON position. • Cruise control main switch in ON position. • Connector disconnected; check at vehicle-side connector [Criteria] Between terminals: B12-chassis grounding • When brake pedal pressed: Continuity established • When brake pedal released: No continuity <Switch (H2)> [Conditions] • Starter switch in OFF position. • Connector disconnected; check at vehicle-side connector [Criteria] Between terminals: B13-chassis grounding • When brake pedal pressed: Continuity established • When brake pedal released: No continuity

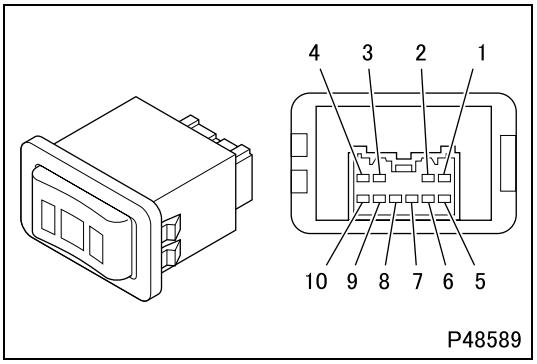

#007 Cruise control main switch inspection

Switch position	Terminal continuity	Operational illumination	Night illumination
ON	1 - 7, 5 - 6	(+) 9 - 3 (–)	(+) 2 - 3 (–)
N (Neutral)	5 - 6	–	
OFF	–	–	

- Replace the switch if found abnormality.

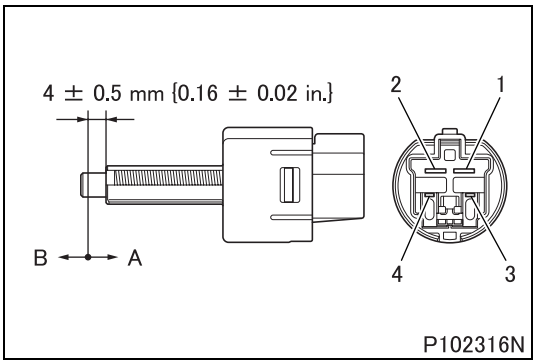

#042 Stop lamp switch

Switch position	Terminal continuity
A	3 - 4
B	1 - 2

- Replace the switch if found abnormality.

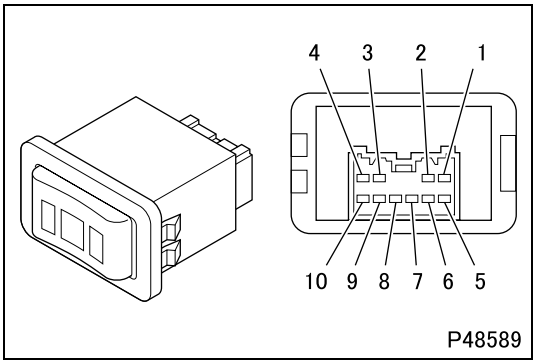

#099 Set and resume switch inspection

Switch position	Terminal continuity	Night illumination
SET	1 - 7	(+) 2 - 3 (–)
N (Neutral)	1 - 8	
RESUME	–	

- Replace the switch if found abnormality.

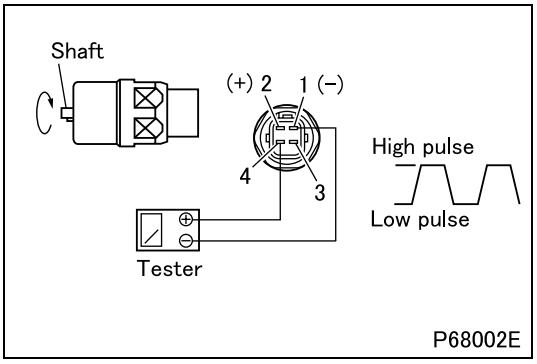

#265 Vehicle speed sensor inspection

- Slowly rotate the shaft of the vehicle speed sensor with battery voltage applied between terminals 1 and 2 of the sensor.
- Measure maximum voltage (high pulse voltage) and minimum voltage (low pulse voltage) appearing between terminals 1 and 4 of the sensor.

Standard value	Low pulse voltage	0.5 V or less
	High pulse voltage	8 ± 1 V

- If the measurements deviate from the specified standard values, replace the sensor.

INSTALLED LOCATIONS OF PARTS

A01 to 16

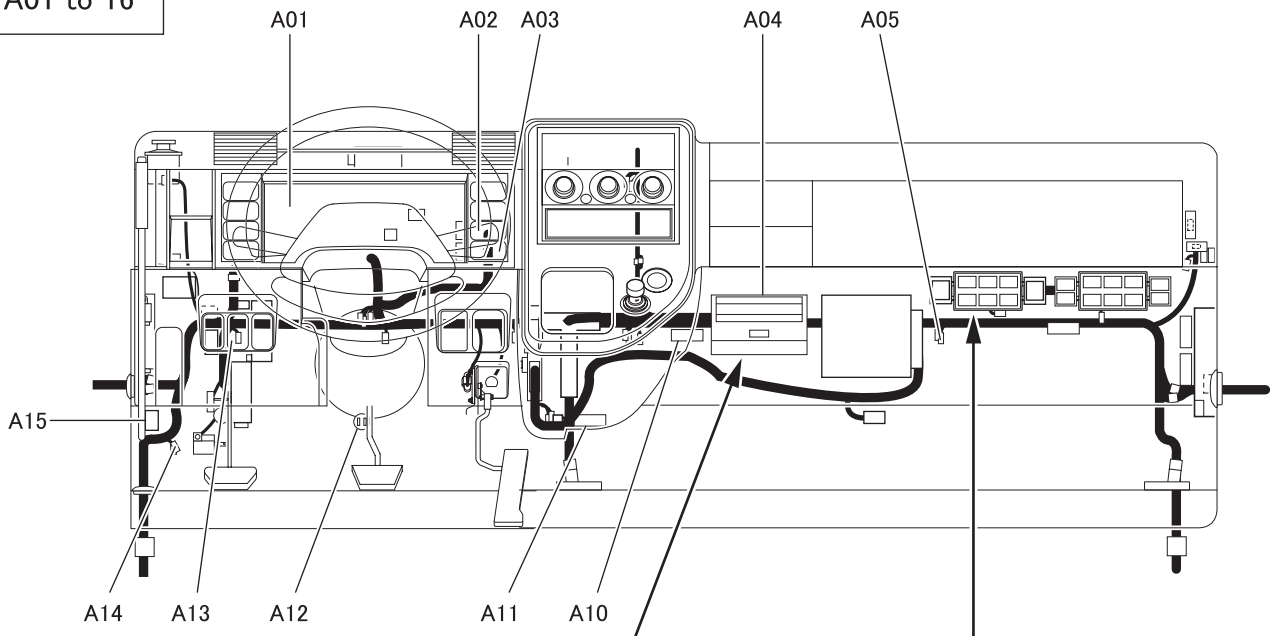

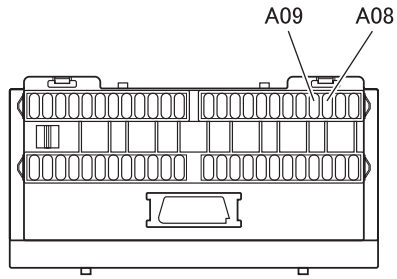

Relay box 1

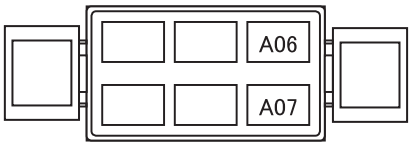

Meter cluster backward view

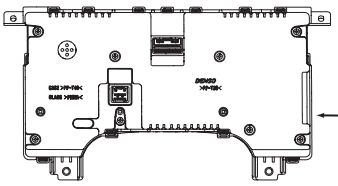

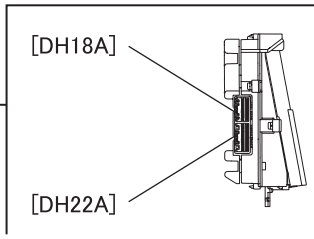

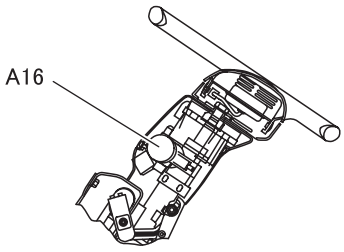

A01 Meter cluster
A02 Cruise control main switch
A03 Set and resume switch
A04 Fuse box
A05 Diode
A06 Stop lamp relay
A07 Cruise control main relay
A08 Memory clear switch
A09 Diagnosis switch
A10 Joint connector (J/C-1)
A11 Joint connector (J/C-M1)
A12 Stop lamp switch
A13 Joint connector (J/C-040)
A14 Joint connector (J/C-040)
A15 Diagnostic connector
A16 Starter switch

J/C : Joint connector
Indicate by connector type [ ].

L03386

A21 to 24

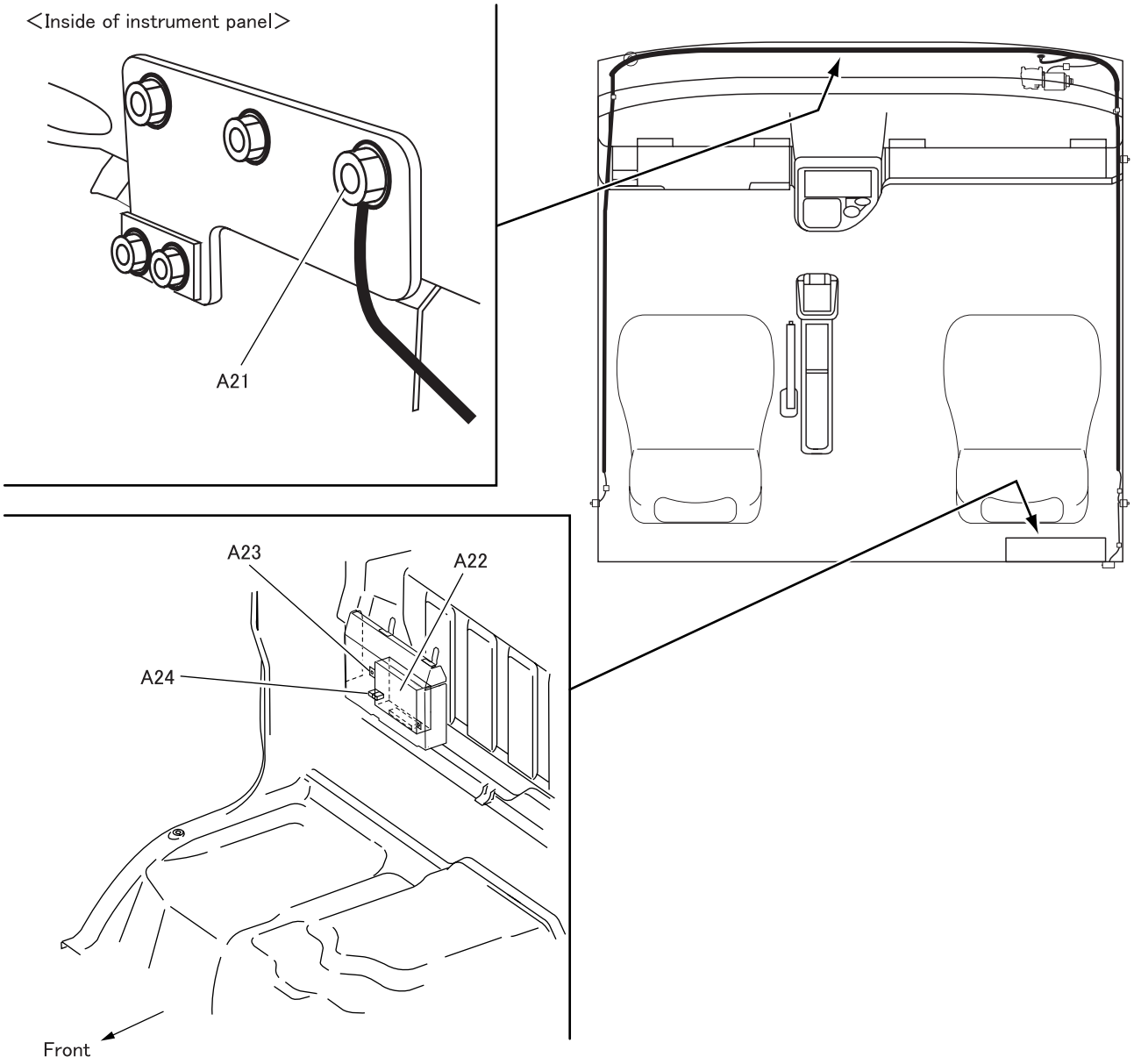

A21 Ground
A22 MVCU
A23 Ground
A24 Resistor unit

MVCU : Multifunction vehicle control unit

B01 to 07

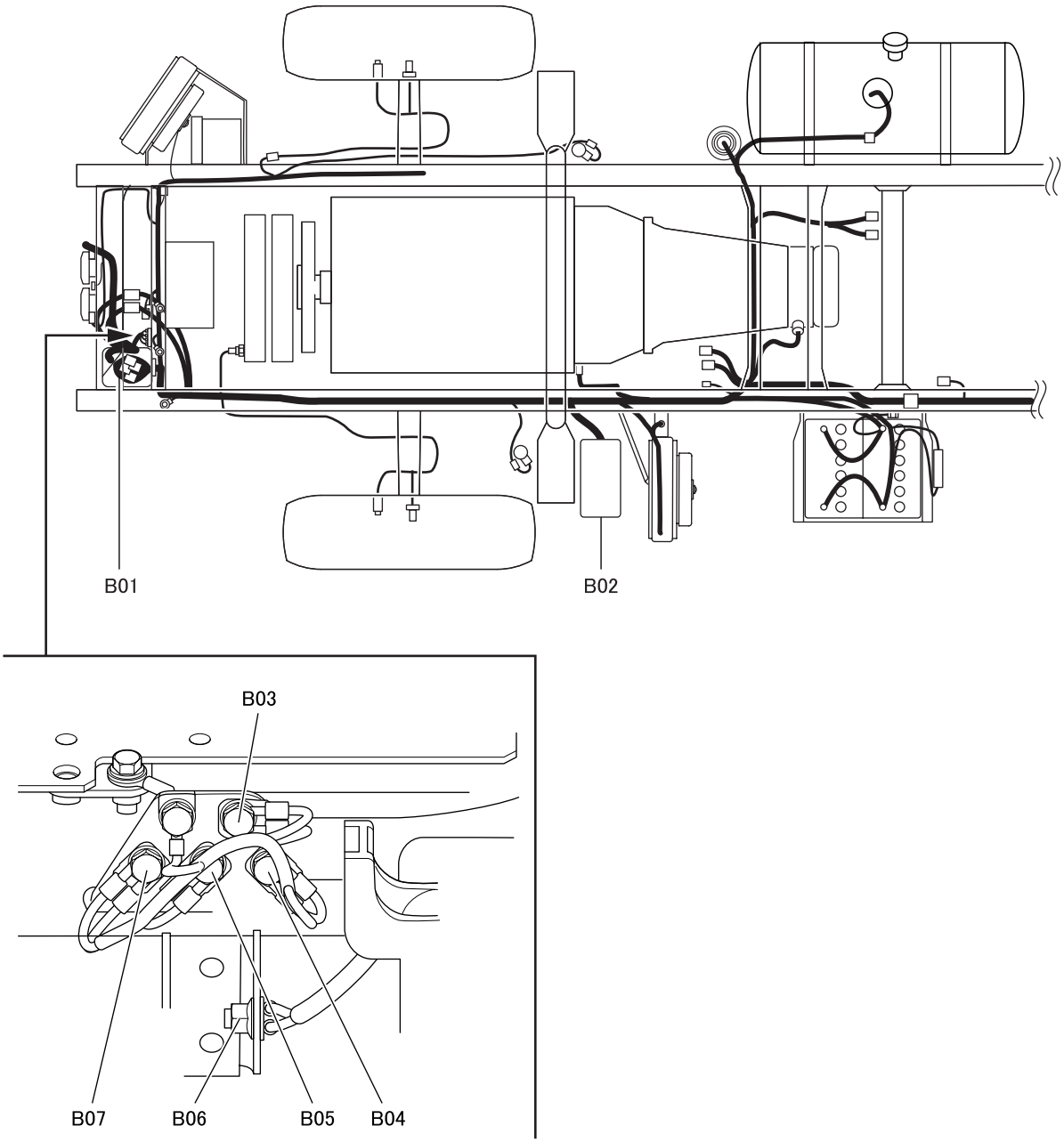

B01 Connection of chassis harness and cab harness <In connector box>
B02 High-current fuse box
B03 Ground
B04 Ground
B05 Ground
B06 Ground
B07 Ground

L03387

C01

< Automatic transmission >

Left side view

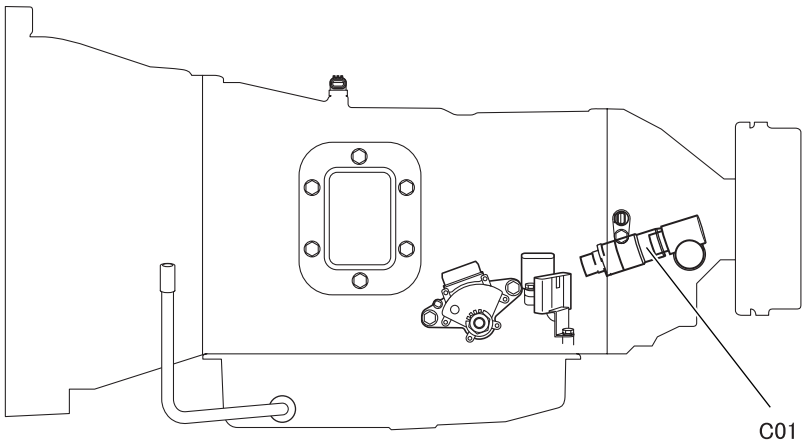

C01 Vehicle speed sensor

ELECTRIC CIRCUIT DIAGRAM

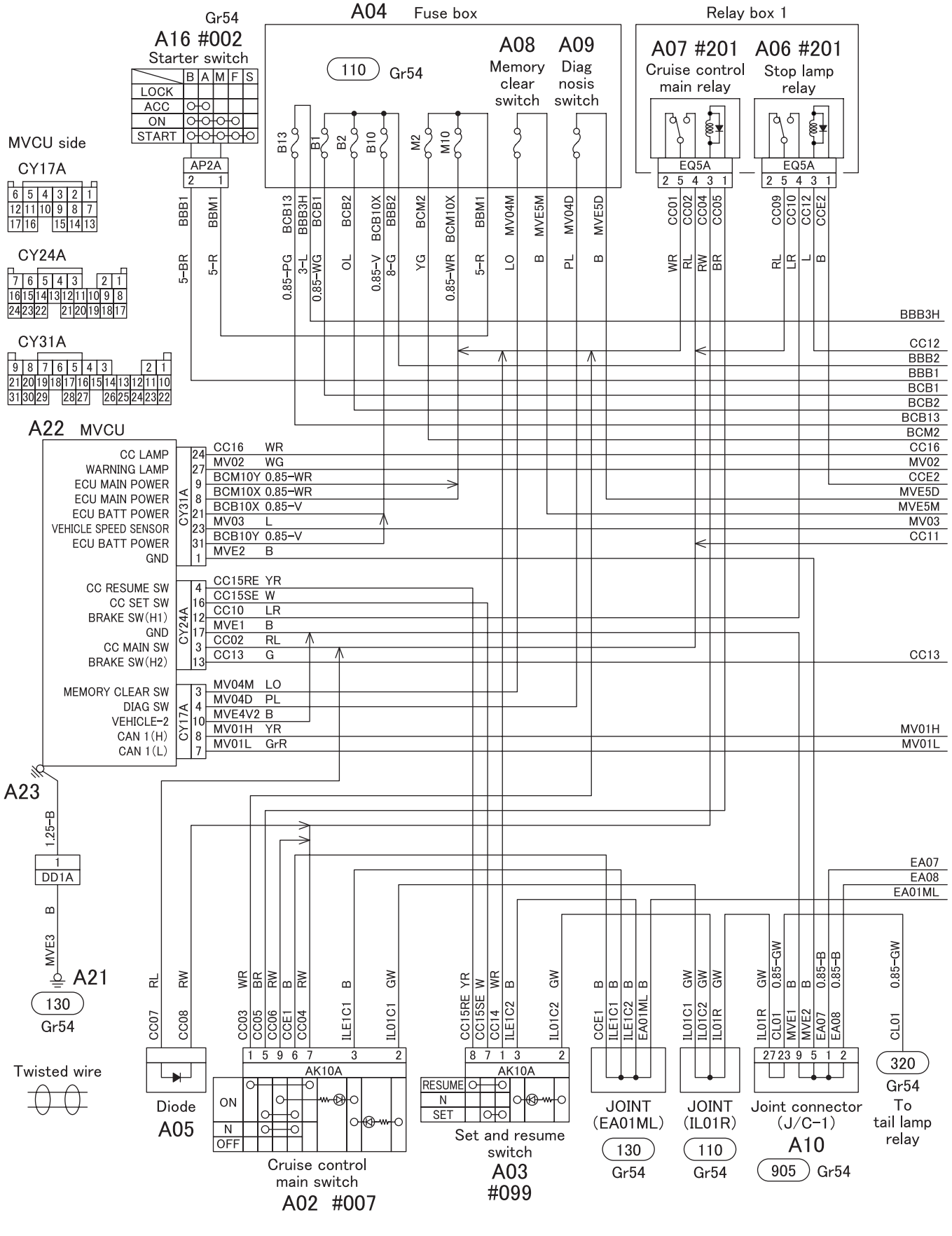

13EB-C04826-1

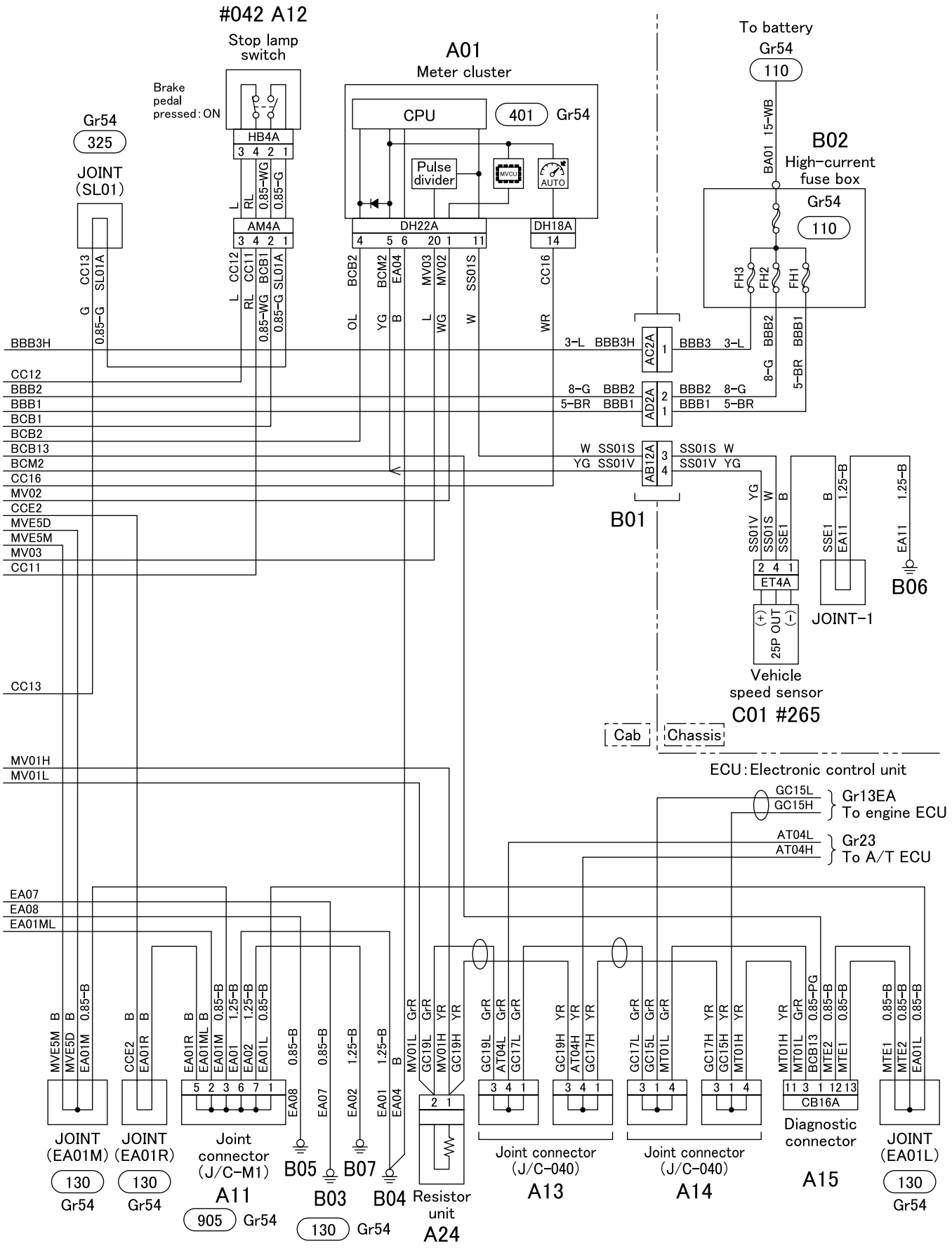
#042 A12
Stop lamp switch
Brake pedal pressed: ON
HB4A
A01
Meter cluster
CPU
401 Gr54
Pulse divider
MVCU
AUTO
DH22A
DH18A
To battery
Gr54
110
B02
High-current fuse box
Gr54
110
Gr54
325
JOINT (SL01)
AM4A
AC2A
AD2A
AB12A
B01
ET4A
25P OUT
Vehicle speed sensor
C01 #265
JOINT-1
B06
Cab
Chassis
ECU: Electronic control unit
GC15L
GC15H
Gr13EA
To engine ECU
AT04L
AT04H
Gr23
To A/T ECU
JOINT (EA01M)
JOINT (EA01R)
Joint connector (J/C-M1)
A11
905 Gr54
B05
B03
130 Gr54
B07
B04
Resistor unit
A24
Joint connector (J/C-040)
A13
Joint connector (J/C-040)
A14
CB16A
Diagnostic connector
A15
JOINT (EA01L)
130 Gr54
BBB3H
CC12
BBB2
BBB1
BCB1
BCB2
BCB13
BCM2
CC16
MV02
CCE2
MVE5D
MVE5M
MV03
CC11
CC13
MV01H
MV01L
EA07
EA08
EA01ML

Group 14

Cooling

Table of Contents

Back

Home

MITSUBISHI FUSO TRUCK OF AMERICA, Inc.

Pub.No.TWSE0805-14

INDEX

SPECIFICATIONS 14-2

STRUCTURE AND OPERATION
1. **Cooling System (Flow of Coolant) 14-4**
2. **Thermostat 14-5**
3. **Water Pump 14-5**

TROUBLESHOOTING 14-6

ON-VEHICLE INSPECTION AND ADJUSTMENT
1. **Inspection and Adjustment of Belt Tension 14-8**
2. **Inspection of Cracks or Damage of the Belt 14-13**
3. **Coolant Replacement and Cleaning of Cooling System 14-14**
4. **Air Bleeding of Cooling System 14-16**
5. **Air/Gas Leakage Test 14-16**

DISCONNECTION AND CONNECTION OF HOSES AND PIPES ... 14-18

RADIATOR, FAN SHROUD 14-22

COOLING FAN, BELT AND WATER PUMP 14-30

TENSION PULLEY 14-33

THERMOSTAT 14-34

PRESSURE CAP AND WATER OUTLET CASE 14-36

SPECIFICATIONS

Item	Specifications
Cooling system	Forced water circulation system
Water pump	Belt-driven involute type
Thermostat	Wax pellet, bottom bypass type (with jiggle valve)
Automatic cooling fan coupling	Continuous control type
Radiator	Tube and corrugated fin type
Coolant capacity L {qts}	16.0 {17}

M E M O

1. Cooling System (Flow of Coolant)

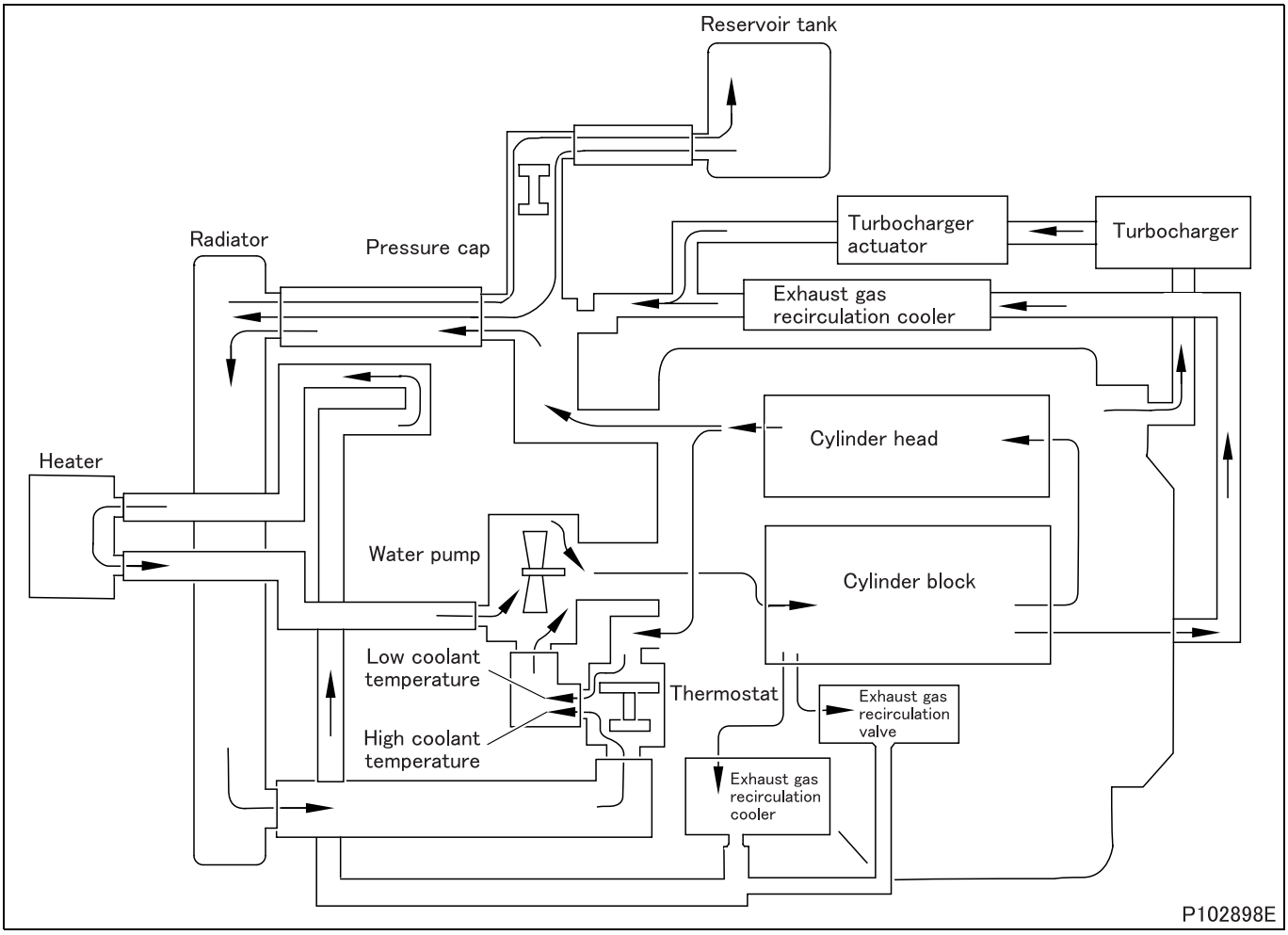

2. Thermostat

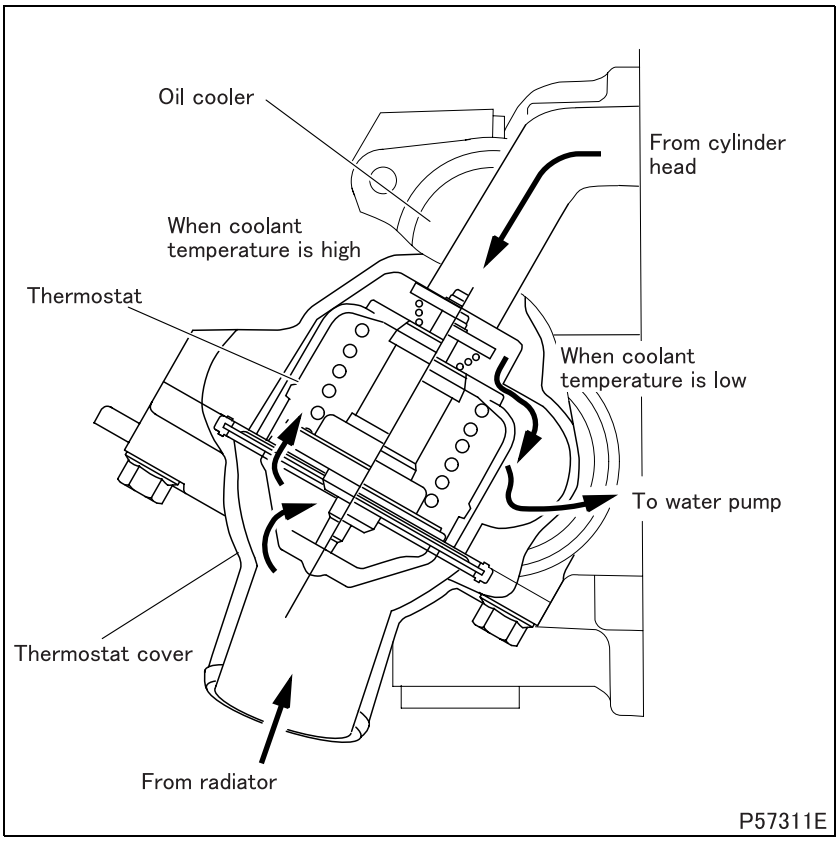

- It is a bottom bypass type that uses a wax-filled pellet as its flow-regulating element. When the wax is heated, it melts from solid to liquid, changing its total volume. This allows the valve to open or close in accordance with the coolant temperature, regulating and adjusting the flow of coolant to the radiator and to the cylinder head (bypassing the radiator).

3. Water Pump

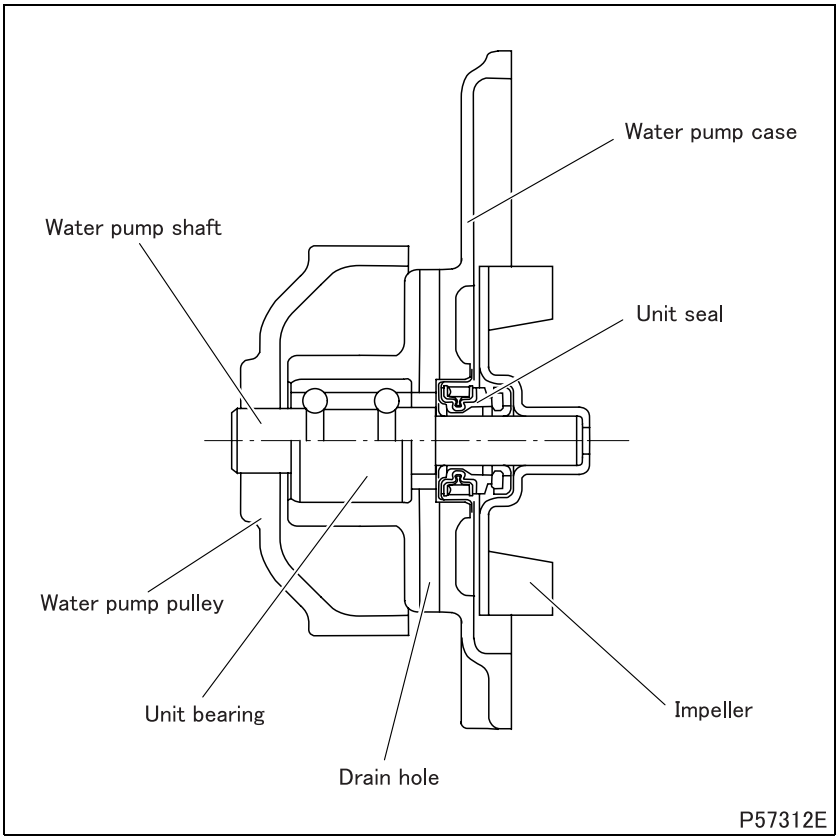

- The water pump has a drain hole to prevent coolant from entering the unit bearing in the case of defect of the unit seal.

Possible causes \ Symptoms		Overheating (poor cooling)	Overcooling	Abnormal noise	Excessive coolant loss	Reference Gr
Belt	Loose or damaged	O		O		
	Excessive tension			O		
	Oil on belt	O				
Water pump	Incorrectly mounted water pump	O			O	
	Defective gasket	O			O	
	Defective unit bearing	O		O		
	Defective impeller	O				
	Defective unit seal	O			O	
	Too loose fit of unit bearing on flange and impeller	O		O		
Thermostat	Incorrectly mounted case	O			O	
	Valve opening temperature too high (valve remains closed)	O				
	Valve opening temperature too low (valve remains open)		O			
Radiator	Clogged core	O				
	Cracked core and/or separation in welds	O			O	
	Cracks in upper tank and/or lower tank	O			O	
	Poor clinching of upper tank and/or lower tank	O			O	
	Defective packing of upper tank and/or lower tank	O			O	
Automatic cooling fan coupling	Defective bearing	O		O		
	Damaged bimetal	O				
	Contaminated bimetal	O	O			
	Silicon oil leakage	O		O		
Cylinder head	Incorrectly mounted cylinder head	O			O	Gr11
	Defective gasket	O			O	
Oil cooler	Incorrectly mounted oil cooler	O			O	Gr12
	Defective gasket	O			O	
	Leakage from coolant temperature sensor	O			O	
Exhaust gas recirculation system	Poor installation of exhaust gas recirculation cooler bracket	O			O	Gr17
	Poor installation of exhaust gas recirculation cooler	O			O	
	Poor installation of connectors	O			O	
	Poor installation of adapter	O			O	
	Damaged O-rings	O			O	

Possible causes \ Symptoms		Overheating (poor cooling)	Overcooling	Abnormal noise	Excessive coolant loss	Reference Gr
Breather cover	Poor installation of breather cover	O			O	Gr17
	Poor installation of gaskets	O			O	
	Damaged O-rings	O			O	
Poorly airtight pressure cap		O				
Insufficient coolant amount		O				
Clogged or scaled coolant passage		O				
Incorrectly connected hoses		O			O	
Poor installation of pipes		O			O	
Excessively low exterior temperature			O			

ON-VEHICLE INSPECTION AND ADJUSTMENT

1. Inspection and Adjustment of Belt Tension

CAUTION ⚠

- **Make sure that there is no oil or grease on the belts. Belts soiled with oil or grease may easily slip, resulting in deteriorated performance of the cooling system.**

Service standards (Unit: mm {in.})

Location	Maintenance item					Standard value	Limit	Remedy
–	Belt tension	40 A, 50 A alternator	When new	When belt tension gauge is used	Deflection	4.5 to 5.5 {0.18 to 0.22}	–	Adjust
				When sonic belt tension gauge is used	Tension	715 to 951 N	–	
			When reused	When belt tension gauge is used	Deflection	6.5 to 7.5 {0.26 to 0.30}	–	
				When sonic belt tension gauge is used	Tension	470 to 580 N	–	
		80 A alternator	When new	When belt tension gauge is used	Deflection	4.5 to 5.5 {0.18 to 0.22}	–	Adjust
				When sonic belt tension gauge is used	Tension	774 to 1029 N	–	
			When reused	When belt tension gauge is used	Deflection	6 to 7 {0.24 to 0.28}	–	
				When sonic belt tension gauge is used	Tension	519 to 666 N	–	

Tightening torque (Unit: N·m {ft.lbs, kgf·m})

Mark	Parts to be tightened	Tightening torque	Remarks
–	Nut (for alternator adjustment)	50 {37, 5.1}	–
–	Bolt (for alternator retention)	90 {66, 9.2}	–

Special tools

Mark	Tool name and shape	Part No.	Application
a	Belt tension gauge P03612	MH062345	Measurement of tension of belt
b	Sonic belt tension gauge 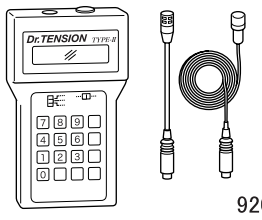 92054	ME357715	

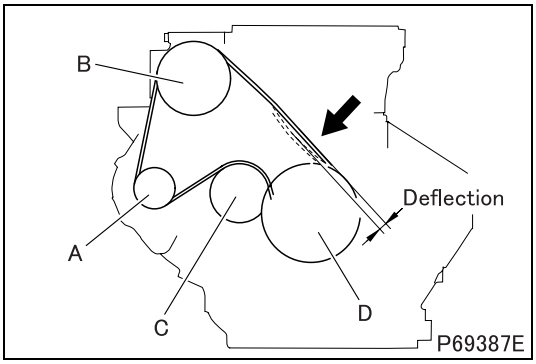

[Inspection]

1.1 Measurement by belt tension gauge

- Press each belt at a central portion between pulleys with a force of approximately 98 N {72 lbs, 10 kgf} as shown in the illustration and measure the amount of deflection of the belt.
  A: Alternator pulley
  B: Air conditioner compressor pulley
  C: Water pump pulley
  D: Fan pulley

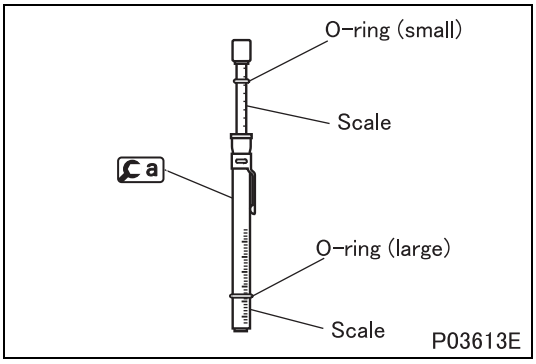

- Place the small O-ring on a at the scale mark corresponding to 98 N {72 lbs, 10 kgf} (press force).
- Place the large O-ring on a at the scale mark corresponding to the maximum permissible deflection value specified for the belt.

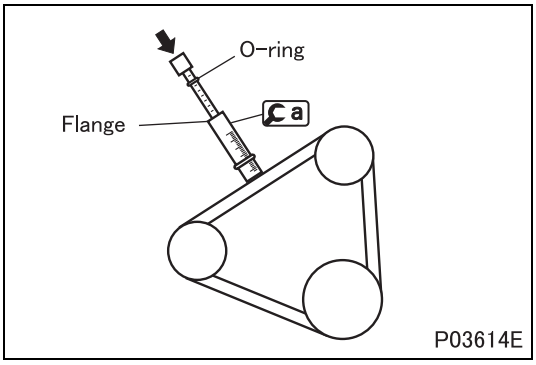

- Place a at a central portion between pulleys of the belt and push the handle (indicated by the arrow in the illustration) until the O-ring touches the flange.

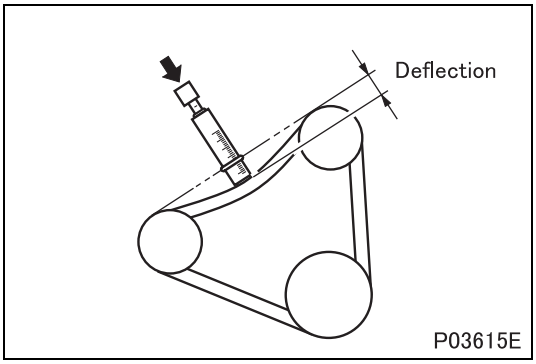

- Measure the amount of deflection of the belt.
- If the measured value deviates from the standard value range, adjust the tension of the belt as follows.

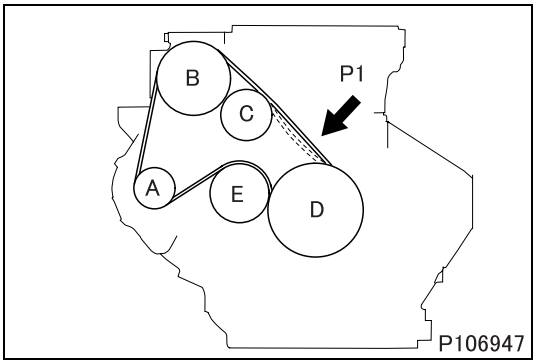

1.2 Measurement using sonic belt tension gauge

- Direct the sensor microphone of [b] to the position shown in the drawing and measure the belt tension.
  - A: Alternator pulley
  - B: Compressor pulley (air conditioner)
  - C: Tension pulley
  - D: Fan pulley
  - E: Water pump pulley
  - P1: Measuring point on the belt

CAUTION ⚠

- **For the operation of the sonic belt tension gauge, refer to the instruction manual of the sonic belt tension gauge.**
- **If the surface temperature of the belt is high, the tension becomes higher. For the correct measurement, measure the tension with the belt surface temperature being similar to the room temperature.**

- Turn on [b] and set the sensitivity of its sensor microphone.
  ON (低: means “low”): Measuring in noisy environment, or outdoors in heavy wind
  ON (高: means “high”): Measuring in silent environment, or measuring a hard-to-vibrate belt

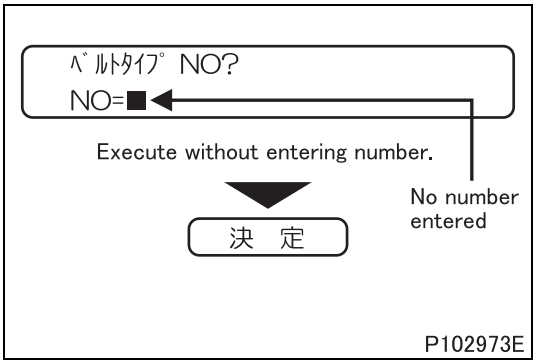

- Press “決定 (means “execute”)” key with no belt type number entered.

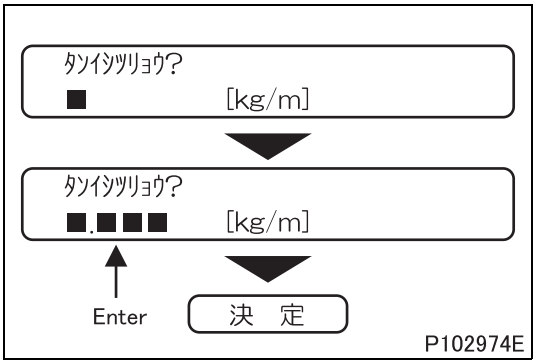

- Enter the unit mass of the belt and push “決定 (means “execute”)”.

Measuring point on the belt	Unit mass of the belt
P1	0.016 kg/m

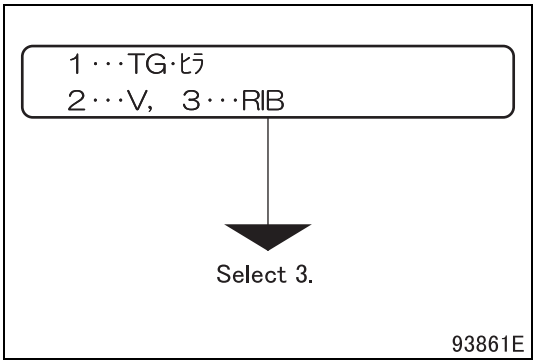

- Select the type of the belt. (Select “3” for ribbed belt.)

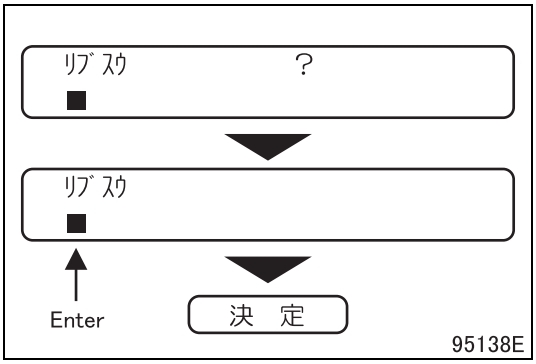

- Enter the number of ribs and push “決定 (means “execute”)”.

Measuring point on the belt	Number of ribs
P1	6

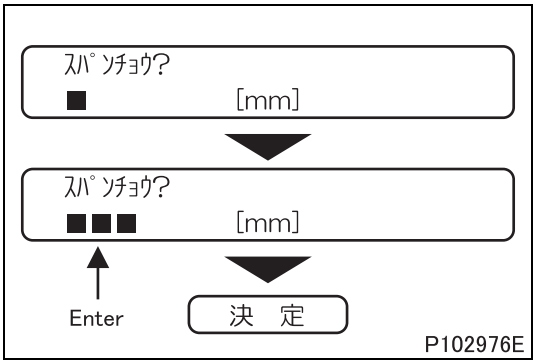

- Enter the length of span and push “決定 (means “execute”)”.

Measuring point on the belt	Length of span
P1	197 mm

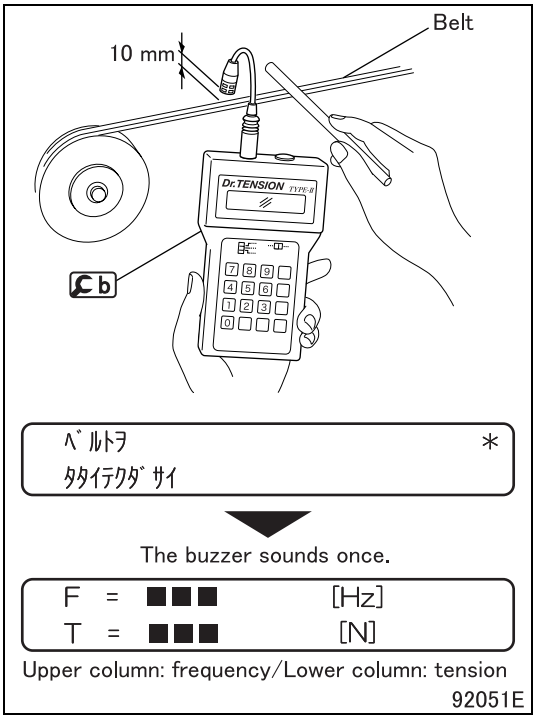

- Set the sensor microphone of b approx. 10 mm above the belt, at the middle position between pulleys.
- Tap the belt lightly with a grip of a screwdriver to vibrate the belt.
- Measure the tension a few times and calculate the average value.
- If the average value is out of the standard value, adjust the belt tension.

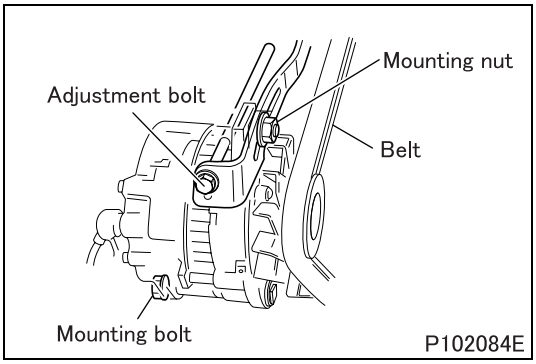

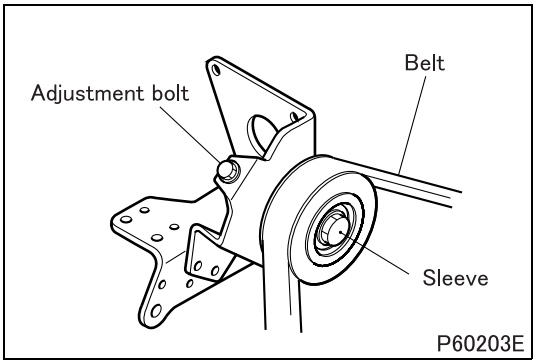

[Adjustment]

(1) Vehicles with air conditioner

- Loosen the alternator mounting nuts (2 locations) and adjust the tension of the belt by tightening or loosening the adjustment bolt.
- After the adjustment is completed, retighten the mounting nuts firmly.

CAUTION ⚠

- **Excessive tension in the belt may damage not only the belt itself but also the bearings of the related components.**

(2) Vehicles without air conditioner

- Loosen the tension pulley mounting sleeve and turn in or out the adjustment bolt to adjust the tension of the belt.
- After the adjustment is completed, retighten the mounting sleeve firmly.

CAUTION ⚠

- **Excessive tension in the belt may damage not only the belt itself but also the bearings of the related components.**

2. Inspection of Cracks or Damage of the Belt

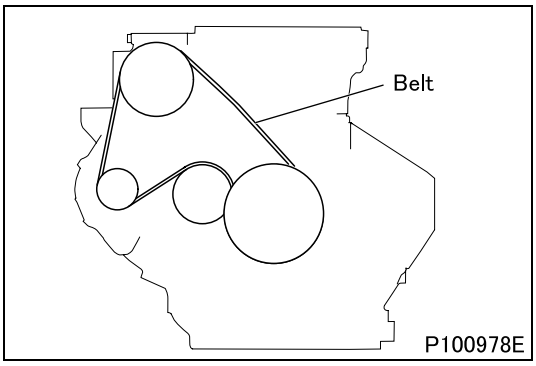

- Visually check the belts for possible cracks and damage.
- If any faults are found, replace the belts.

Belt condition	Remaining service life (reference)
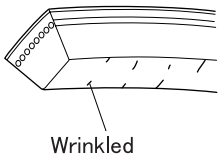 P69698E	• The driving distance over which the belt can still be used is at least as long as that over which the belt has been used since the vehicle was new or since the belt was replaced (whichever is more recent).
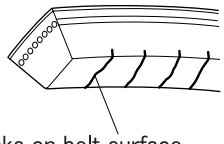 P69699E	• The driving distance over which the belt can still be used is about half of that over which the belt has been used since the vehicle was new or since the belt was replaced (whichever is more recent).
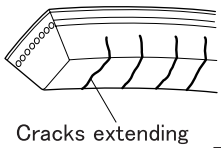 P69700E	• The driving distance over which the belt can still be used is about a quarter of that over which the belt has been used since the vehicle was new or since the belt was replaced (whichever is more recent).
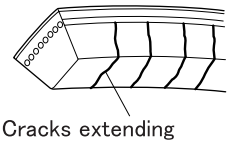 P69701E 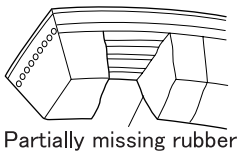 P69702E	• The belt has reached the end of its service life and must be replaced.

3. Coolant Replacement and Cleaning of Cooling System

Tightening torque (Unit: N·m {ft.lbs, kgf·m})

Mark	Parts to be tightened	Tightening torque	Remarks
–	Radiator drain cock	2.5 ± 0.5 {1.8 ± 0.4, 0.25 ± 0.05}	–
–	Water drain plug	24.5 ± 4.9 {18 ± 3.6, 2.5 ± 0.5}	–

- Using the radiator for extended periods of time without cleaning can increase chance of rust and scale formation, which may cause engine overheating. The cooling system must be cleaned periodically.
- Coolants containing FUSO DIESEL LONGLIFE COOLANT require replacement every two years. This replacement interval can be extended to a maximum of six years by adding FUSO DIESEL LONGLIFE COOLANT ADDITIVE to the coolant once every year for the four years following the first two-year limit. For instructions on the use of this product, refer to the Owner's Handbook.

3.1 Draining of coolant

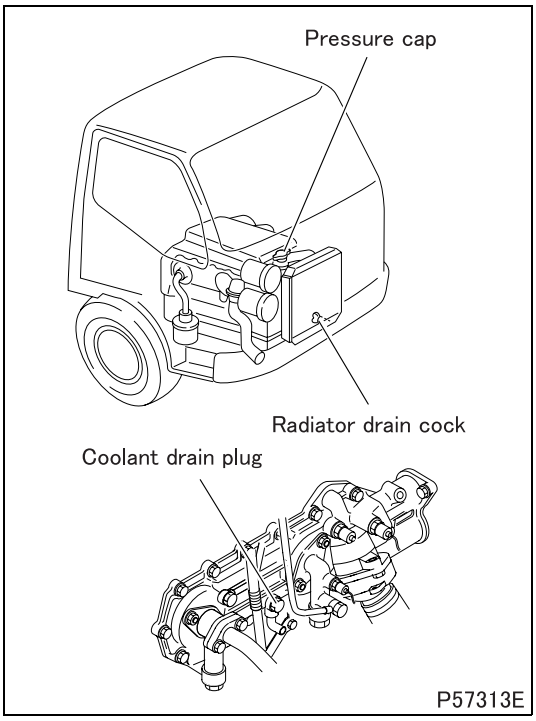

- Before draining the coolant, loosen the pressure cap to reduce the pressure in the cooling system. Remember to drain the coolant out of the reservoir tank as well.

WARNING ⚠

- **Drain the coolant only after it has cooled sufficiently to avoid getting scalded.**
- **Opening the pressure cap while the coolant temperature is still high can cause hot coolant to spray out. Cover the pressure cap with a cloth, and loosen it slowly to let the pressure out before opening it fully.**

3.2 Cleaning procedure

CAUTION ⚠

- **Water used for flushing the cooling system must be soft water that has a property meeting the requirements indicated below. Using hard water will cause scale and rust to form in the system.**
  Total hardness ..... 300 ppm or less
  Sulfate SO_4^- ..... 100 ppm or less
  Chloride Cl^- ..... 100 ppm or less
  Total dissolved solids ..... 500 ppm or less
  pH ..... 6 to 8

- Keep the coolant temperature at approximately 90°C {195°F} so that the thermostat valve remains open and the coolant continues to circulate in the radiator.
- For the sake of convenience you can raise the coolant temperature quickly by covering the front of the radiator with corrugated cardboard or something similar.
- In cases where a great amount of rust has accumulated it often happens that as a result of cleaning the radiator starts leaking. Conduct a thorough check for leakage after cleaning.

- Select an appropriate cleaning method according to the condition of the cooling system as shown below.

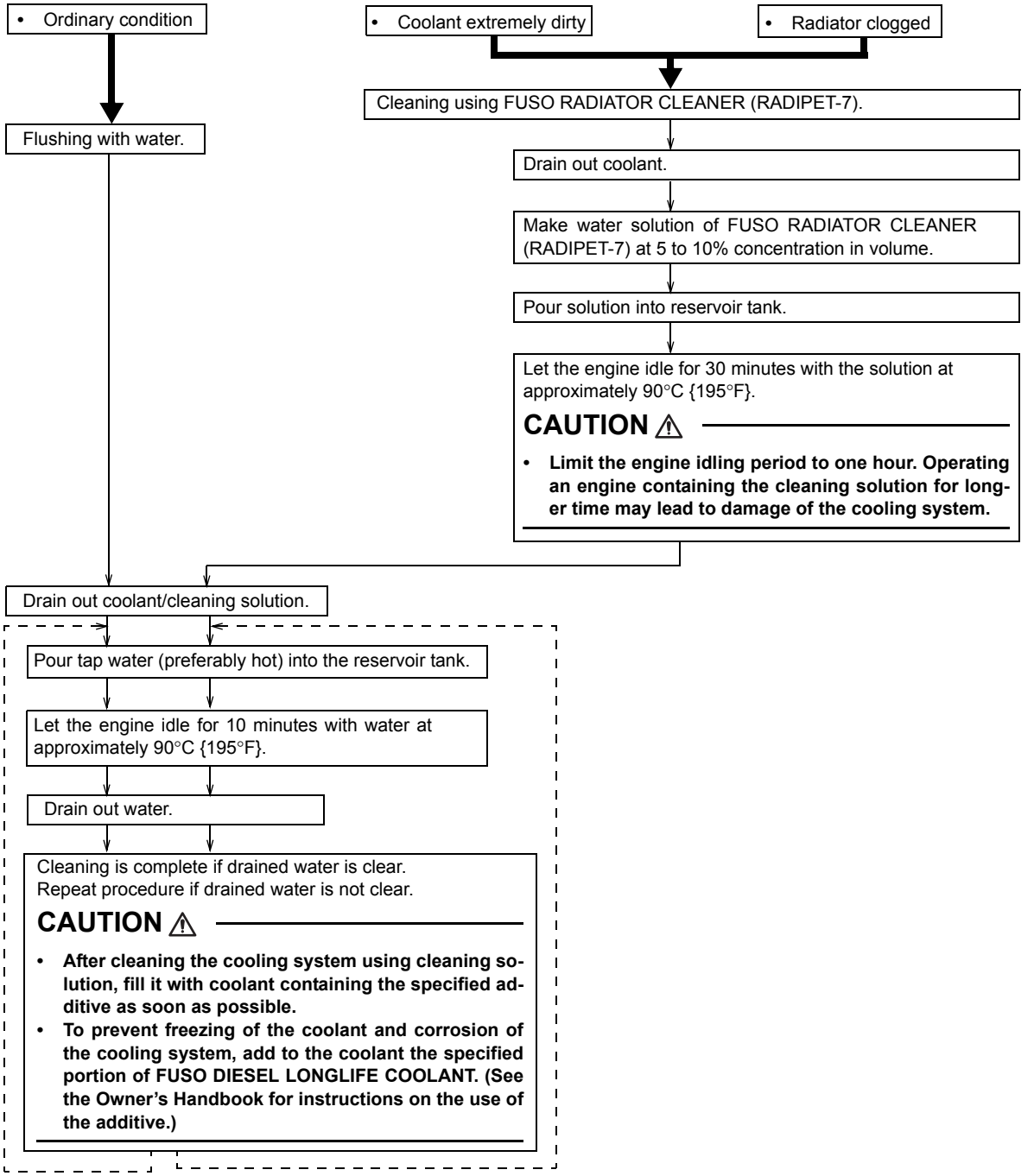

DANGER ⚠

- **If you accidentally splash FUSO DIESEL LONGLIFE COOLANT, FUSO ANTIFREEZE, or RADIATOR ANTIRUST (RADIPET 9) in your eyes, wash it out immediately with water and seek medical attention.**

WARNING ⚠

- **FUSO DIESEL LONGLIFE COOLANT is flammable. Keep them away from heat and flames.**

4. Air Bleeding of Cooling System

- With the pressure cap removed and the coolant temperature at 90°C {195°F}, let the engine idle in order to bleed air completely out of the cooling system.
- After air bleeding is completed, refill the reservoir tank with coolant as needed.

5. Air/Gas Leakage Test

- Presence of air or exhaust gas in coolant accelerates corrosion of the cooling system components. To prevent this, carry out air/gas leakage tests in accordance with the following procedure.
- Remove the pressure cap.

WARNING ⚠

- **If the engine is hot, boiling coolant may spurt out from the filler port when the pressure cap is loosened. To avoid a scold, make sure to remove the pressure cap only when the coolant is cold.**

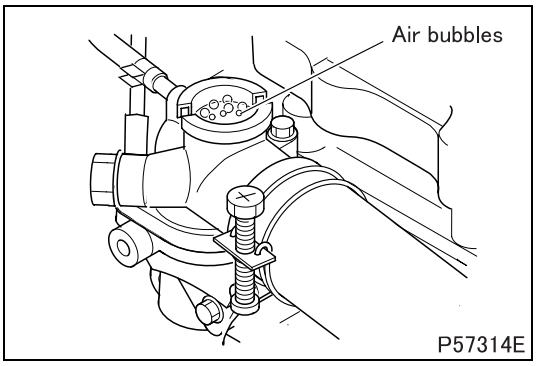

- Run the engine until the coolant temperature rises to approximately 90°C {195°F}.
- If air bubbles appear continuously through the filler port, there is air or exhaust gas penetrating into the cooling system.
- Presence of air in coolant can be an indication of loose cylinder head bolts, loose water pump mounting bolts, loose hose connections, and/or a damaged hose.
- Presence of exhaust gas in coolant can be an indication of a damaged cylinder head gasket and/or cracks in the cylinder head.

M E M O

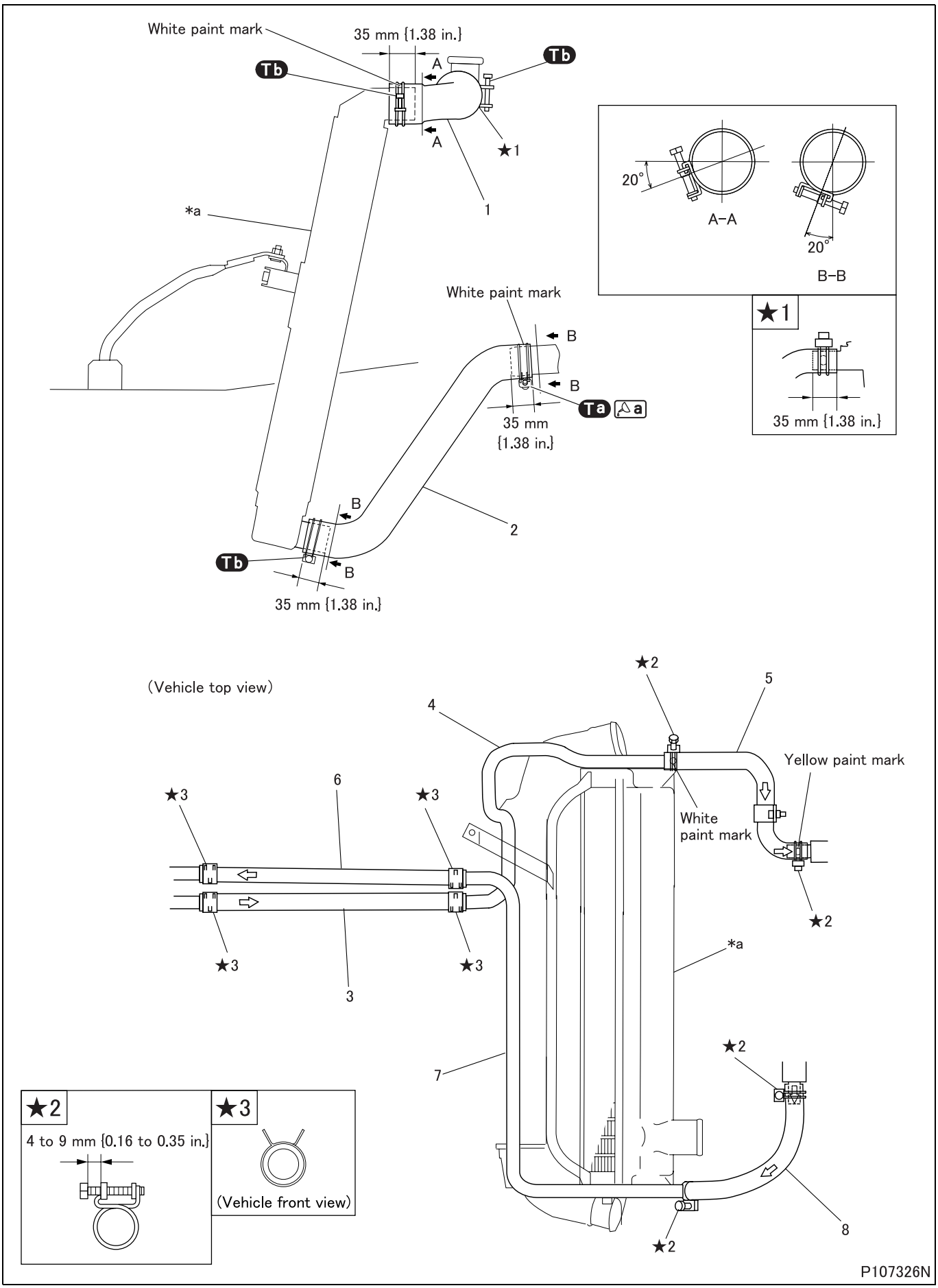
White paint mark
35 mm {1.38 in.}
Tb
A
★1
1
*a
20°
A-A
B-B
White paint mark
B
Ta a
35 mm {1.38 in.}
2
35 mm {1.38 in.}
(Vehicle top view)
★2
5
4
Yellow paint mark
6
★3
White paint mark
3
*a
7
8
4 to 9 mm {0.16 to 0.35 in.}
(Vehicle front view)
P107326N

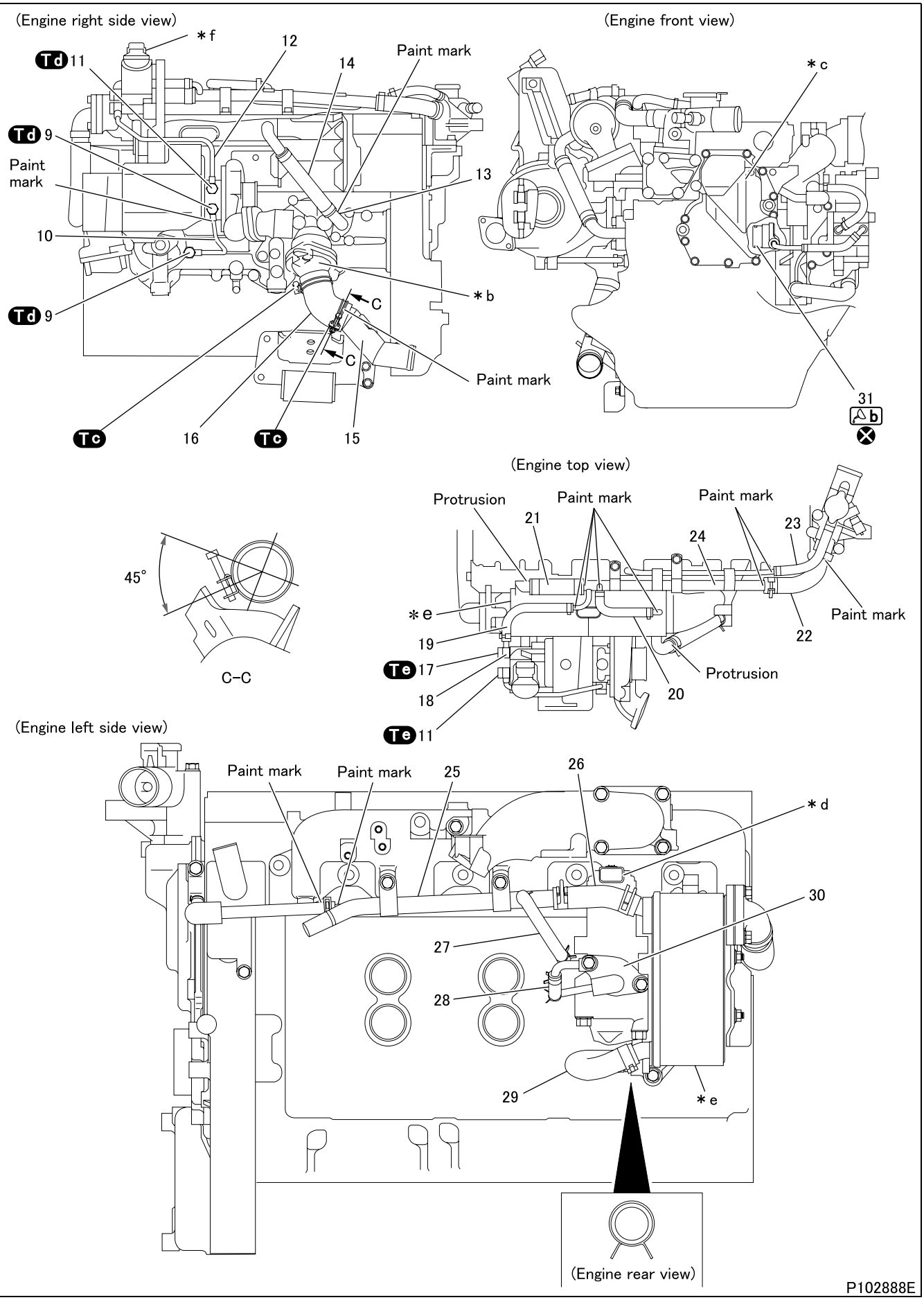
(Engine right side view)
*f
12
14
Paint mark
Td 11
Td 9
Paint mark
13
10
Td 9
*b
C
C
Paint mark
Tc
16
Tc
15
(Engine front view)
*c
31
b
(Engine top view)
Protrusion
Paint mark
Paint mark
21
24
23
*e
19
Te 17
18
Te 11
20
Protrusion
22
Paint mark
45°
C-C
(Engine left side view)
Paint mark
Paint mark
25
26
*d
30
27
28
29
*e
(Engine rear view)
P102888E

DISCONNECTION AND CONNECTION OF HOSES AND PIPES

● Removal sequence

1 Upper radiator hose
2 Lower radiator hose
3 Heater hose
4 Heater pipe
5 Heater hose
6 Heater hose
7 Heater pipe
8 Heater hose
9 Eyebolt
10 Water pipe
11 Eyebolt
12 Water pipe
13 Water exhaust gas recirculation inlet pipe
14 Water hose
15 Water pipe
16 Water hose
17 Eyebolt
18 Joint swivel
19 Water hose
20 Water hose
21 Water hose
22 Water hose
23 Water hose
24 Water exhaust gas recirculation outlet pipe
25 Water pipe
26 Water-out hose
27 Water hose
28 Water hose
29 Water-in hose
30 Adapter
31 O-ring

***a**: Radiator
***b**: Thermostat cover
***c**: Breather cover
***d**: Exhaust gas recirculation valve
***e**: Exhaust gas recirculation cooler
***f**: Turbocharger actuator
⊗: Non-reusable parts

● Installation sequence

Follow the removal sequence in reverse.

CAUTION ⚠

- **Install each hose clamp to the angle indicated in the illustration so that sufficient clearance is assured between the hose clamp and its surrounding parts.**
- **Keep the O-ring free of engine oil. Engine oil will make the O-ring swell, which may cause leakage.**

Tightening torque (Unit: N·m {ft.lbs, kgf·m})

Mark	Parts to be tightened	Tightening torque	Remarks
Ta	Clamp	1.5 to 2.0 {1.1 to 1.5, 0.15 to 0.2}	Wet
Tb	Clamp	3.0 to 4.5 {2.2 to 3.3, 0.3 to 0.5}	–
Tc	Clamp	4 {3.0, 4.0}	–
Td	Eyebolt (water pipe mounting)	26 {19, 2.7}	–
Te	Eyebolt (water pipe mounting)	21 {15, 2.1}	

Lubricant and/or sealant

Mark	Points of application	Specified lubricant and/or sealant	Quantity
a	Clamp screw threads	Engine oil	As required
b	O-ring	Soapy water	As required

◆Installation procedure◆

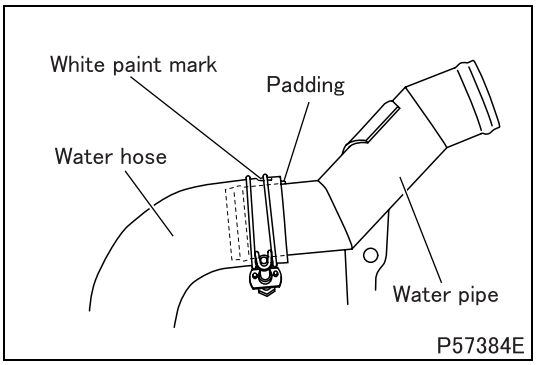

■ Installation: Water hose

- Install the water hose with the white mark on its end aligned with the padding on the water pipe.

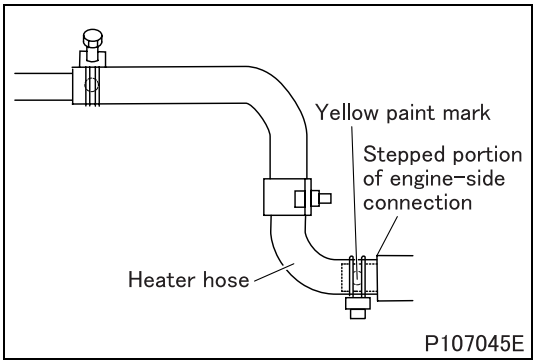

■ **Installation: Heater hose**

- To install the heater hose with a yellow paint mark to the engine-side connection, slide the hose over the connection until it seats to the stepped portion.

RADIATOR, FAN SHROUD

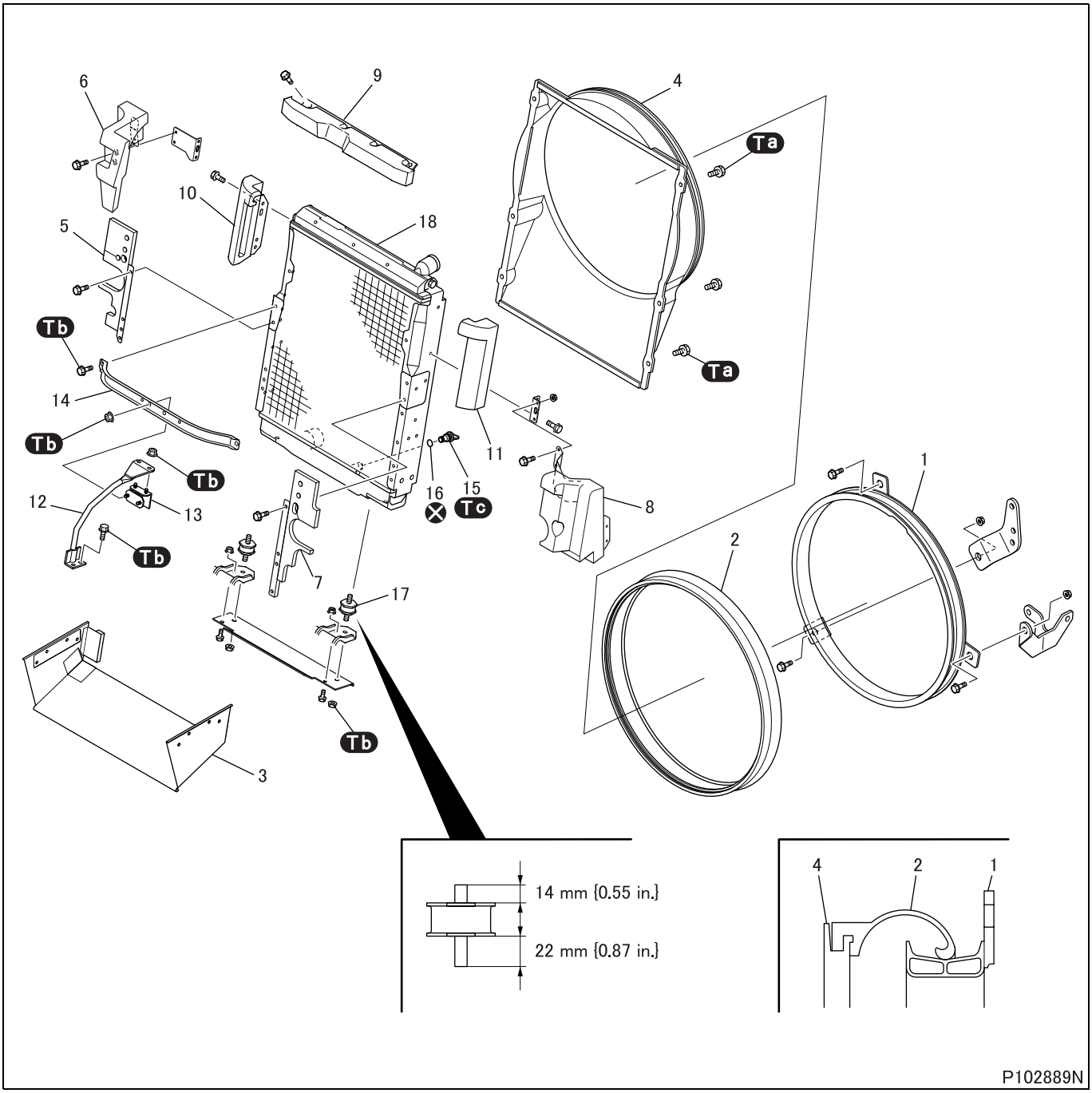

● **Removal sequence**

1 Fan shroud
2 Shroud seal
3 Air scoop
4 Radiator shroud
5 Baffle plate RH
6 Baffle plate RH
7 Baffle plate LH
8 Baffle plate LH
9 Baffle plate upper
10 Baffle plate RH
11 Baffle plate LH
12 Support rod
13 Support cushion
14 Upper support
15 Radiator drain cock
16 O-ring
17 Support cushion
18 Radiator
(See later section.)

⊗: Non-reusable parts

● **Installation sequence**

Follow the removal sequence in reverse.

Tightening torque (Unit: N·m {ft.lbs, kgf·m})

Mark	Parts to be tightened	Tightening torque	Remarks
Ta	Bolt (upper shroud mounting)	5 to 7 {3.7 to 5.2, 0.5 to 0.7}	–
	Bolt (lower shroud mounting)		
Tb	Bolt (support rod mounting)	12 to 15 {8.9 to 11, 1.18 to 1.47}	–
	Nut (support cushion mounting)		
	Bolt (upper support mounting)		
	Nut (support cushion mounting)		
Tc	Radiator drain cock	2.5 ± 0.5 {1.8 ± 0.4, 0.25 ± 0.05}	–

Special tools (Unit: mm {in.})

Mark	Tool name and shape	Part No.	Application
Ca	Tip clearance spacer 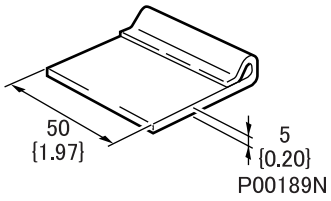	MC019470	Adjusting clearance between fan shroud and cooling fan

◆Installation procedure◆

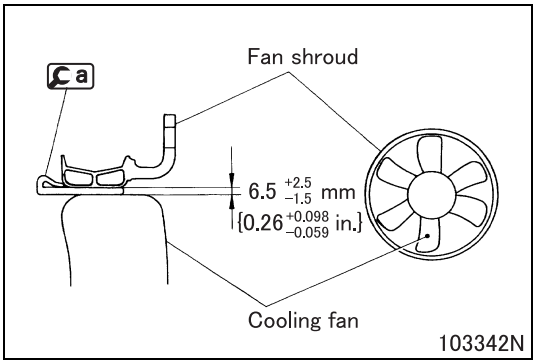

■ Installation: Fan shroud

- Using Ca, adjust the clearance between the fan shroud and cooling fan blades to the dimension shown in the illustration.

RADIATOR, FAN SHROUD

Radiator

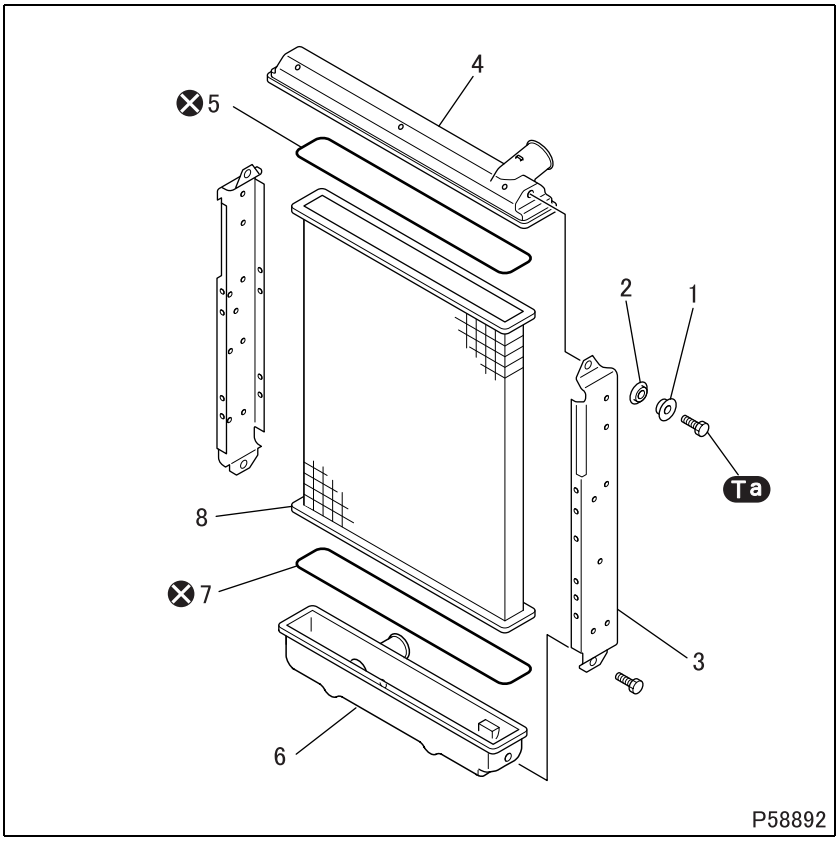

● **Disassembly sequence**

1 Pipe
2 Bush
3 Side member
4 Upper tank
5 Packing
6 Lower tank
7 Packing
8 Core

⊗: Non-reusable parts

CAUTION ⚠

- **Do not disassemble the radiator unless defects are evident.**
- **Handle the upper tank and lower tank carefully, as they are made of plastic and may crack under impact.**
- **Check the number of paint marks put near the upper tank and lower tank mounting tabs. The number of paint marks corresponds to the number of times the tabs have been unbent and re-clinched. If the core has already two paint marks, replace it with a new one.**

● **Assembly sequence**

Follow the disassembly sequence in reverse.

Service standards

Location	Maintenance item	Standard value	Limit	Remedy
–	Air leakage from radiator (air pressure 147 kPa {21 psi, 1.47 kgf/cm^2})	0 cm^3 {0 mL}	–	Repair or replace

Tightening torque (Unit: N·m {ft.lbs, kgf·m})

Mark	Parts to be tightened	Tightening torque	Remarks
Ta	Bolt (side member mounting)	13 {9.6, 1.3}	–

Special tools

Mark	Tool name and shape	Part No.	Application
a	Overhaul handle 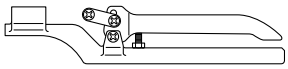 P51240	MH062875	Installation and removal of upper tank and lower tank
b	Claw 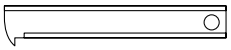 P51241	MH062876	
c	Punch assembly 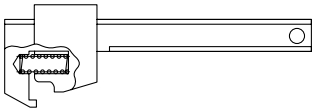 P51242	MH062877	

◆Inspection before removal◆

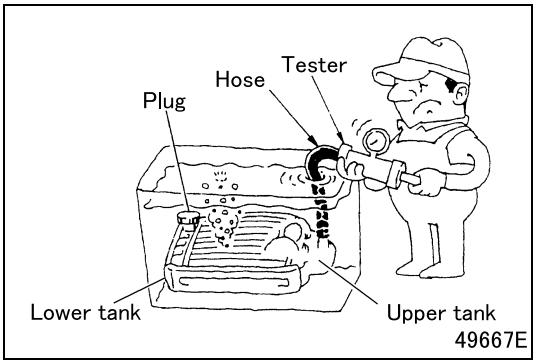

■ **Inspection: Radiator air leakage**

- Connect a hose and radiator cap tester to the upper tank.
- Plug the lower tank and put the entire radiator into a tank filled with water.
- If air leakage is found, repair or replace the radiator.
- Apply a specified air pressure using radiator cap tester, and check for any air leakage.

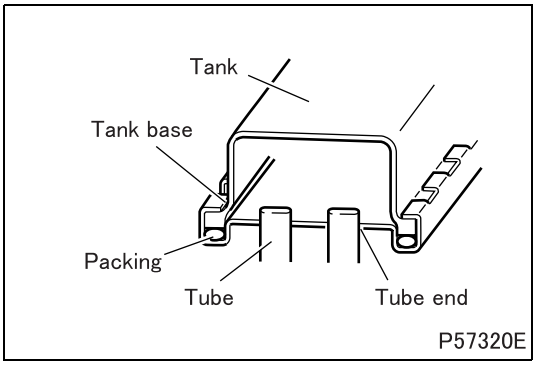

- Replace the following parts according to the area of leakage.

Area of leakage		Cause
Upper tank Lower tank	Tank body	Cracks in tank
	Tank base	Defective tabs Defective packing Cracks in tank
Tube body, tube ends		Cracks in tube

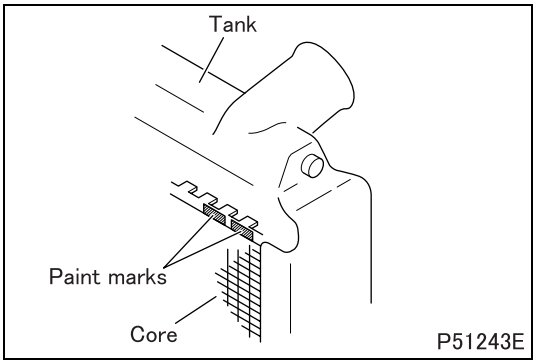

NOTE

- **The core may have paint marks that indicate the number of times the upper tank and lower tank mounting tabs have been unbent and re-clinched. Replace the core if it has already two paint marks.**
- **One paint mark is made every time the tabs are unbent and re-clinched. Upper tank paint marks should be counted separately from lower tank paint marks.**

◆Removal procedure◆

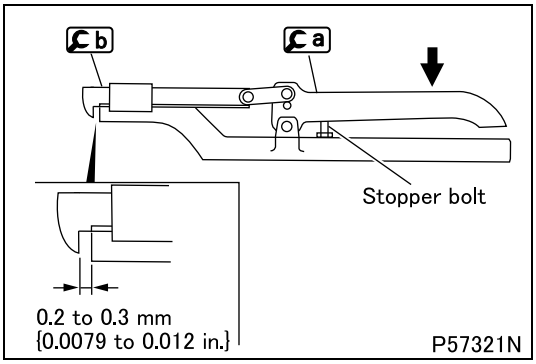

■ Removal: Upper tank and lower tank

- Attach b onto a.
- Using the stopper bolt on a, adjust the jaw span of b to the dimension indicated in the illustration.

CAUTION ⚠

- **Make sure to adjust the stopper bolt before using the tools. Failure to do so may cause damage to b.**

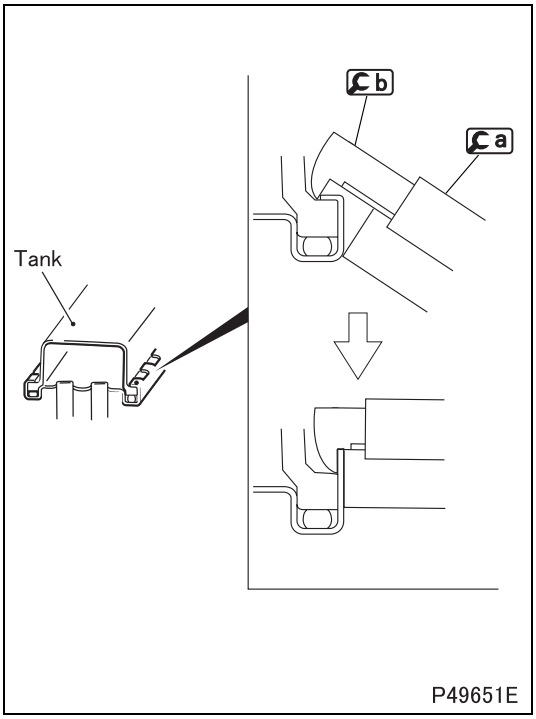

- Using b, undo the tabs that are holding the tank in place.
- Once each tab is unbent, grip a more tightly to straighten it out completely.
- Undo all the tabs on the entire periphery of the tank, then remove the tank using the inlet hose fitting as a grip.

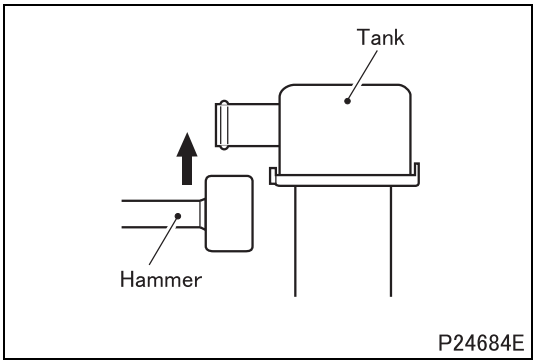

- If the tank does not come off easily, tap it lightly with a soft-face hammer (rubber or plastic hammer) to loosen it.

CAUTION ⚠

- **Handle the tanks carefully, as they are made of plastic and may crack easily under impact.**

◆Inspection procedure◆

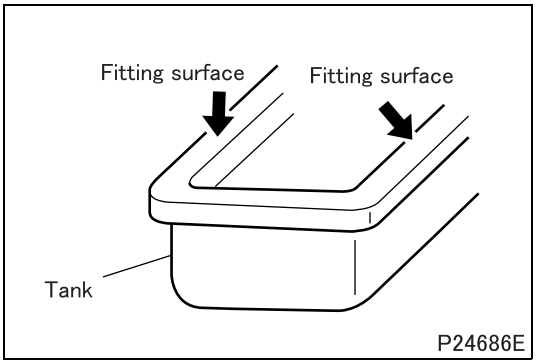

■ Inspection: Core fitting surfaces of tank

- Inspect the core fitting surfaces of the tank for any dirt or damage. If necessary, clean them thoroughly.
- Replace the tank(s) if defective.

CAUTION ⚠

- **Carry out the inspection with your bare hands to avoid putting foreign matter on the fitting surfaces.**

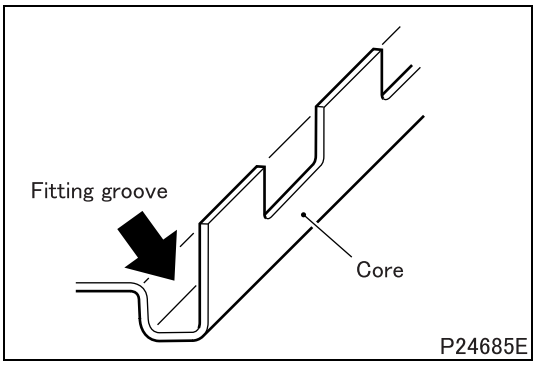

■ Inspection: Tank fitting groove of core

- Check the tank fitting groove of the core for any foreign matter or cracks.
- If foreign matter is found on the groove surfaces, lightly scrub it off with a No.1000 sandpaper taking care not to damage the surfaces, or blow it off with compressed air.
- If a crack is found on the groove surfaces, repair the crack or replace the core.

CAUTION ⚠

- **Installing a packing and tank on the core without removing foreign matter from the groove surfaces can lead to coolant leakage. Make sure to inspect the entire groove surfaces extremely carefully. Even one strand of hair is enough to cause leakage.**

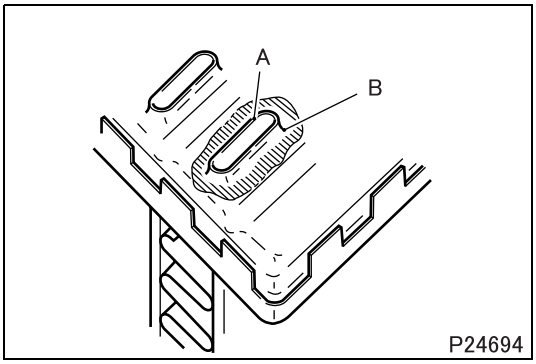

Repair of core

CAUTION ⚠

- **The following core repair procedure involves tungsten inert gas arc welding (TIG arc welding). Only personnel competent for doing this type of welding should carry out the job.**
- **Dry the core completely before performing welding. Welding wet parts could be extremely dangerous.**

- Scrub both ends A of a leaky tube as well as the surrounding areas B of each end with a stainless wire brush. Continue scrubbing until the aluminum layer becomes exposed.

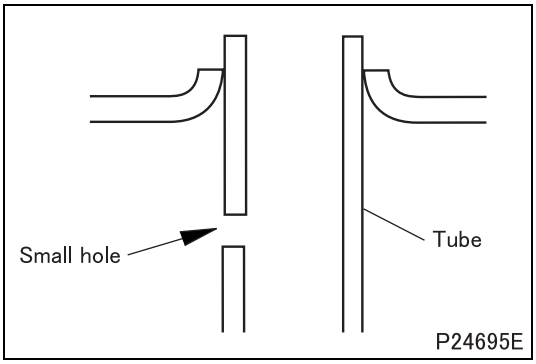

- Drill a small hole in the tube to let the air out when both ends of the tube are welded closed.

CAUTION ⚠

Failure to drill an air release hole in the tube may cause pinholes to form in the welds.

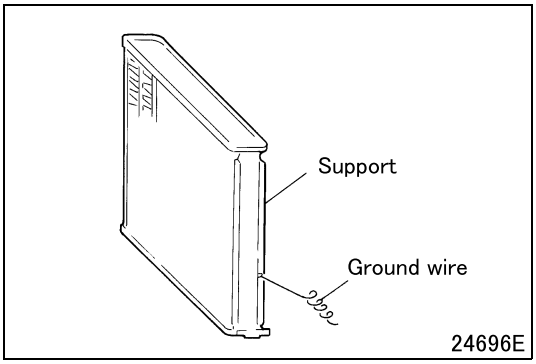

- Connect one of the support edges of the core to ground with a wire.

CAUTION ⚠

- **Inadequate connection of the ground wire can cause a short circuit to a part of the core, which may cause the part to melt.**

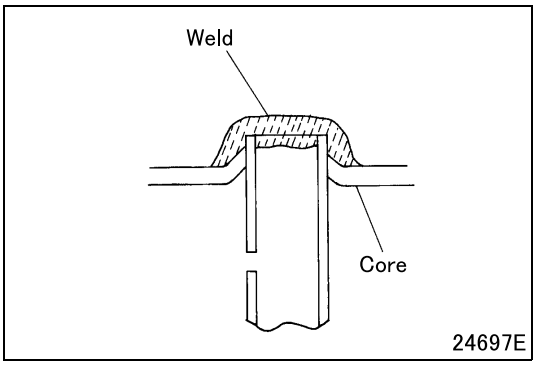

- Close both ends of the tube by TIG arc welding.
  Welding conditions
  - Welding rod: A4043
    (diameter approximately 2 mm {ϕ0.079 in.})
  - Welding current: AC80A
- After the welding is completed, check for the following defects. If any of these defects are spotted, repair the defect or replace the core.
  - Undercuts
  - Cracks in weld bead
  - Cracks in base metal

CAUTION ⚠

- **Make sure that welds are proper. Any defect in welding can lead to recurrence of leakage.**

◆Installation procedure◆

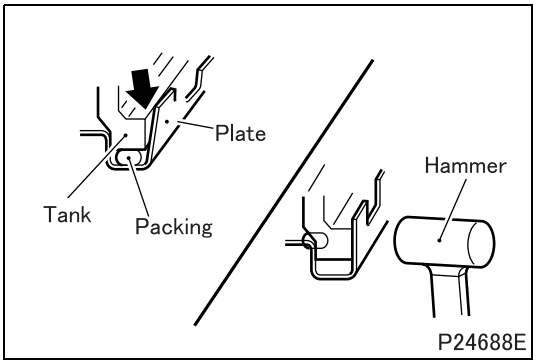

■ Installation: Upper tank and lower tank

- If there is a gap between the tank and core's tank holding plate when the tank is placed in position, lightly tap the plate with a rubber or plastic hammer to eliminate the gap.

CAUTION ⚠

- **When installing the tank and packing, use your bare hands to avoid putting foreign matter on the parts.**

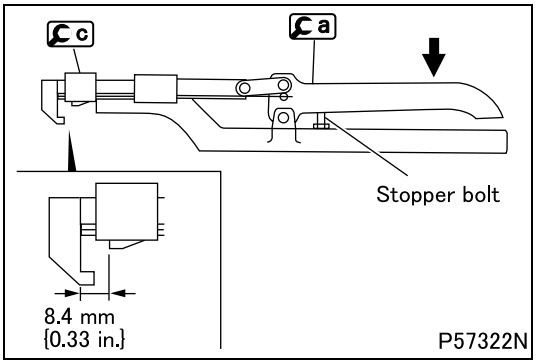

- Attach [c] onto [a].
- Using the stopper bolt on [a], adjust the jaw span of [c] to the dimension indicated in the illustration.

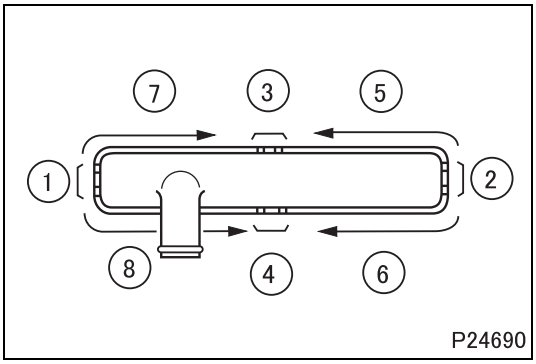

- Bend and clinch the tabs of the core over the brim of the tank in the sequence indicated in the illustration.
  1 to 4: Clinch the two tabs at the center on each side of the tank.
  5 to 8: Clinch the rest of the tabs in the order indicated by the arrows.

CAUTION ⚠

- **The tabs on sides 1 and 2 cannot be clinched using [c]. Use a pair of pliers with the noses wrapped with vinyl tape to clinch these tabs.**

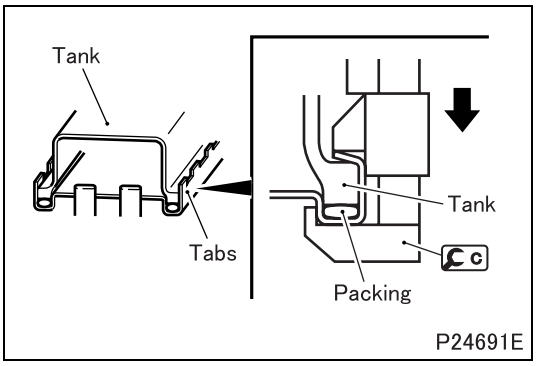

- After clinching all the tabs, check for leakage.

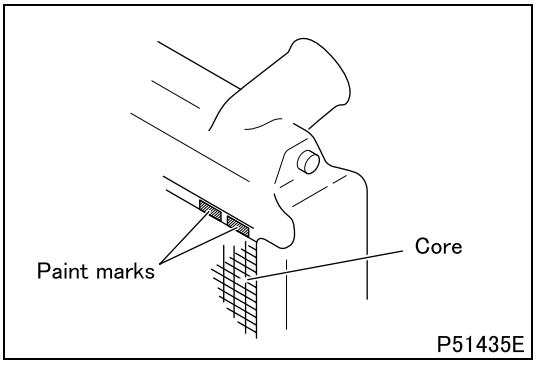

- Put a paint mark on a clearly visible area of the core to indicate the number of times the tabs have been unbent and re-clinched.

CAUTION ⚠

- **One paint mark should be made for each of the upper and lower tanks every time the tabs for it are unbent and re-clinched.**

COOLING FAN, BELT AND WATER PUMP

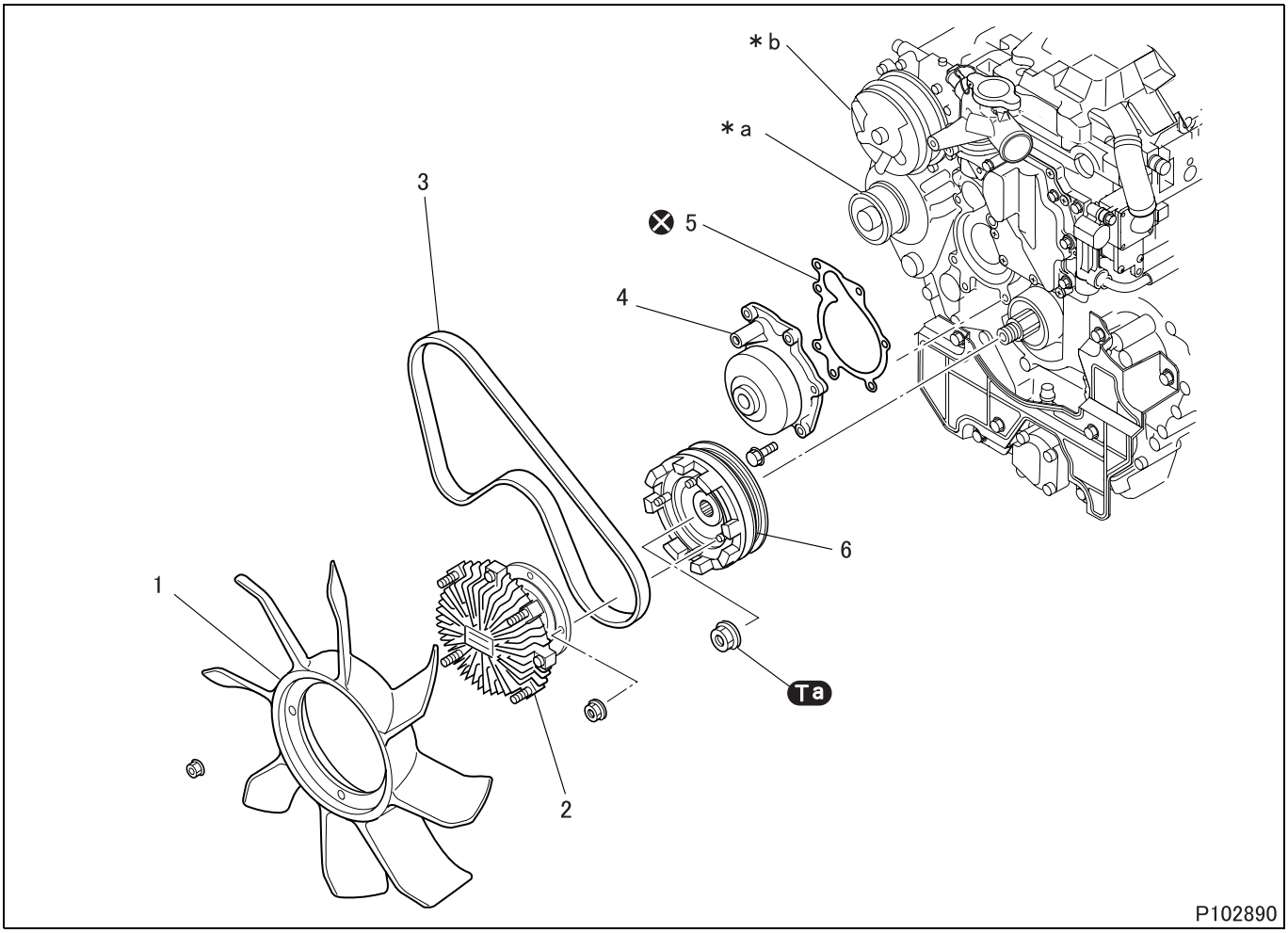

● **Removal sequence**

1 Cooling fan
2 Automatic cooling fan coupling
3 Belt
4 Water pump
5 Gasket
6 Fan pulley

***a**: Alternator
***b**: Compressor
<With air conditioner>
Tension pulley
<Without air conditioner>

⊗: Non-reusable parts

● **Installation sequence**

Follow the removal sequence in reverse.

CAUTION ⚠

- **The automatic cooling fan coupling and the water pump cannot be disassembled. It must be replaced if defective.**
- **Make sure that there is no oil or grease on the belts. Belts soiled with oil or grease may easily slip, resulting in deteriorated performance of the cooling system.**

Tightening torque (Unit: N·m {ft.lbs, kgf·m})

Mark	Parts to be tightened	Tightening torque	Remarks
Ta	Nut (fan pulley mounting)	370 {270, 38}	–

Special tools (Unit: mm {in.})

Mark	Tool name and shape	Part No.	Application
Ⓐa	Holding bar A: 114 {4.49}, B: ϕ9 {ϕ0.35} 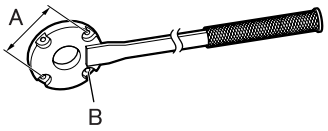 P69433	MH062970	Holding of fan pulley

◆Inspection and cleaning procedure◆

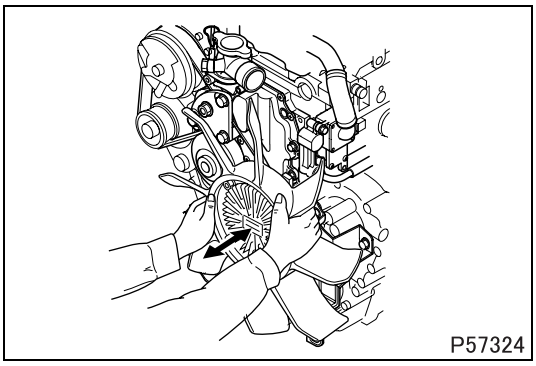

■ Inspection: Automatic cooling fan coupling

- Make an inspection of the following points. Replace the automatic cooling fan coupling if defective.
  Check that:
  - the hydraulic oil sealed inside the coupling is not leaking;
  - the coupling does not make any abnormal noise or rotate unevenly due to defects in the inside bearing when rotated manually; and
  - the automatic cooling fan coupling does not move too much when pushed and pulled in the axial directions when the engine is cold.

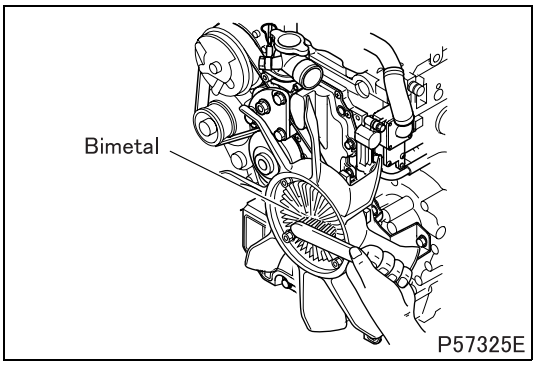

■ Cleaning: Automatic cooling fan coupling

- When removing foreign matter from the bimetal, be careful not to press too hard against the bimetal.

◆Removal procedure◆

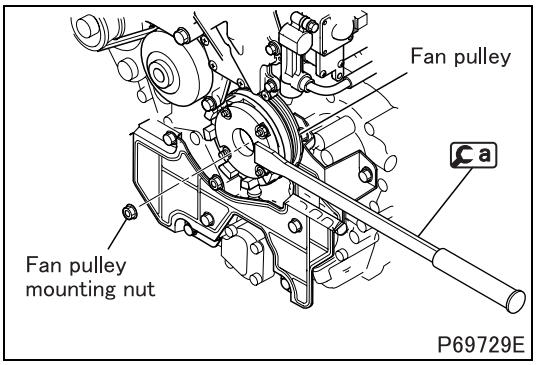

■ Removal: Fan pulley

- Put Ⓐa in position on the studs of the fan pulley and fix the tool by using nuts.
- While holding Ⓐa, loosen the fan pulley mounting nut.

◆Installation procedure◆

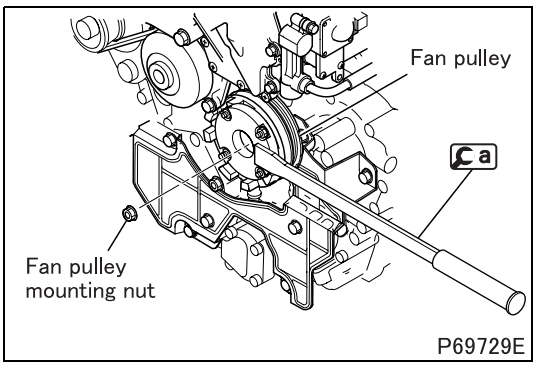

■ **Installation: Fan pulley**

- Put a in position on the studs of the fan pulley and fix the tool by using nuts.
- Tighten the fan pulley mounting nut to the specified torque while holding a.

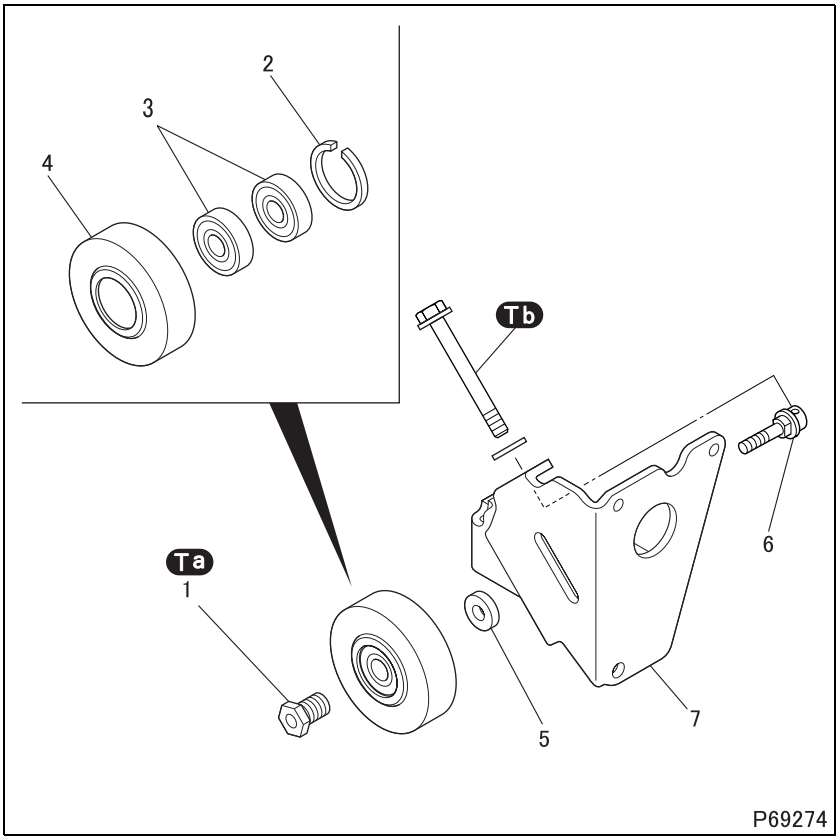

● **Disassembly sequence**

1 Sleeve
2 Snap ring
3 Bearing
4 Tension pulley
5 Spacer
6 Shaft
7 Tension pulley bracket

● **Assembly sequence**

Follow the disassembly sequence in reverse.

Tightening torque (Unit: N·m {ft.lbs, kgf·m})

Mark	Parts to be tightened	Tightening torque	Remarks
Ta	Sleeve	15 {11, 1.5}	–
Tb	Bolt (fixing of shaft)		

THERMOSTAT

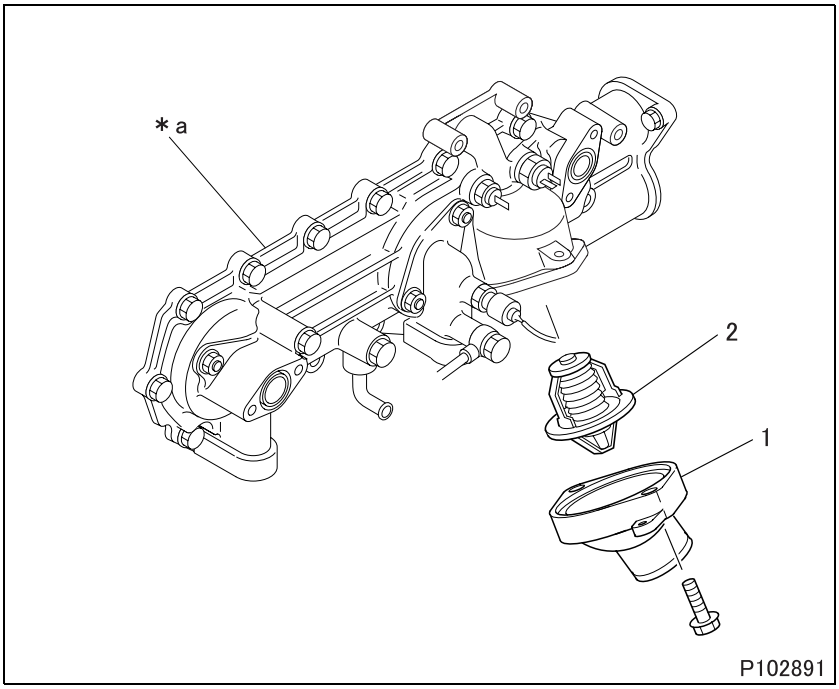

● Disassembly sequence

1 Thermostat cover
2 Thermostat

***a**: Oil cooler

● Assembly sequence

Follow the disassembly sequence in reverse.

Service standards (Unit: mm {in.})

Location	Maintenance item		Standard value	Limit	Remedy
2	Thermostat	Valve opening temperature	82 ± 2°C {180 ± 3.6°F}	–	Replace
		Valve lift / temperature	10 {0.39} or more / 95°C {205°F}		

◆Inspection procedure◆

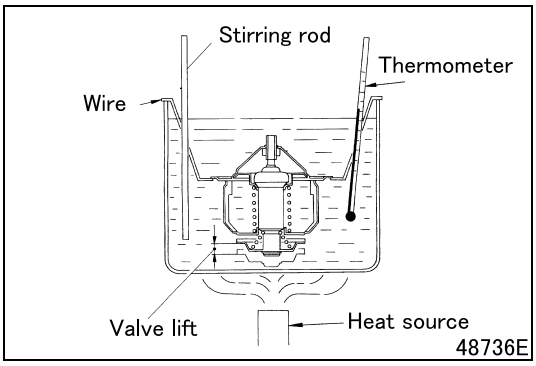

■ Inspection: Thermostat

- Stir the water using a stirring rod to maintain an even water temperature in the container, then conduct the tests indicated below.
- If the measured values deviate from the standard value ranges, replace the thermostat.

(1) Valve opening temperature

- Hold the thermostat with wire to keep it away from the heat source.
- Heat the water gradually to the valve opening temperature.
- Maintain this temperature for five minutes and make sure that the valve is completely open.
- Make sure that the valve closes completely when the water temperature drops below 65°C {150°F}.

(2) Valve lift

- Heat the water to a temperature slightly higher than the valve opening temperature. Maintain this temperature for five minutes and measure the valve lift.

◆Installation procedure◆

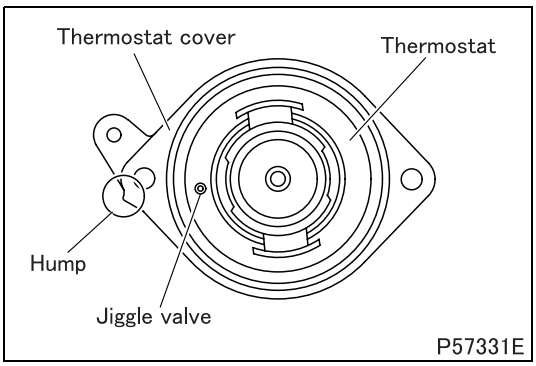

■ **Installation: Thermostat**

- Mount the thermostat on the thermostat cover in the illustrated direction.

PRESSURE CAP AND WATER OUTLET CASE

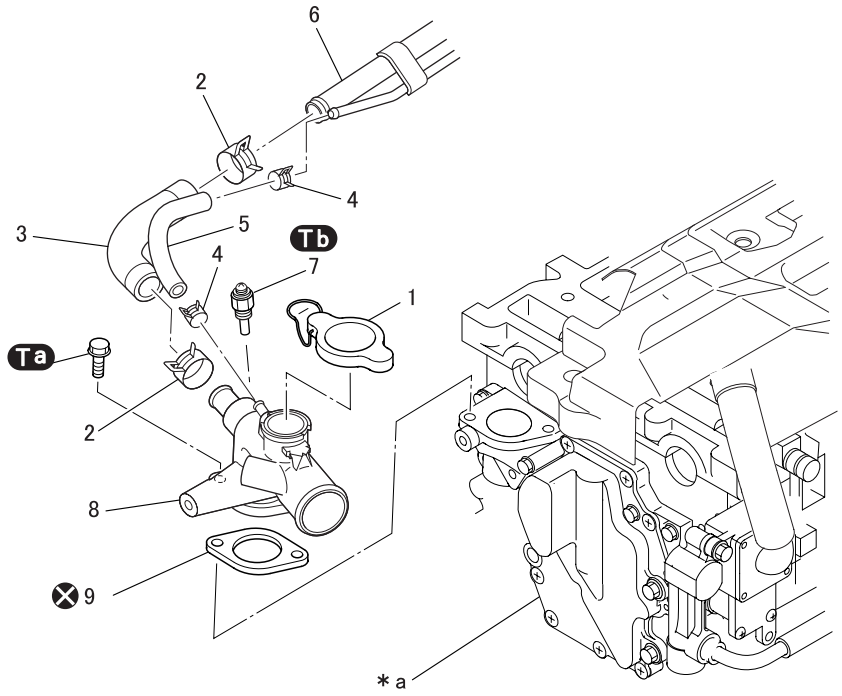

P102892

● **Disassembly sequence**

1 Pressure cap
2 Clip
3 Water hose
4 Clip
5 Water hose
6 Exhaust gas recirculation outlet pipe
7 Overheating switch
8 Water outlet case
9 Gasket

***a**: Breather cover
⊗: Non-reusable parts

● **Assembly sequence**

Follow the disassembly sequence in reverse.

Service standards

Location	Maintenance item	Standard value	Limit	Remedy
1	Pressure cap valve opening pressure	110 ± 15 kPa {16 ± 2.2 psi, 1.1 ± 0.15 kgf/cm^3}	–	Replace

Tightening torque (Unit: N·m {ft.lbs, kgf·m})

Mark	Parts to be tightened	Tightening torque	Remarks
Ta	Bolt (water outlet case mounting)	24 {18, 2.4}	–
Tb	Overheating switch	35 {26, 3.6}	–

◆Inspection procedure◆

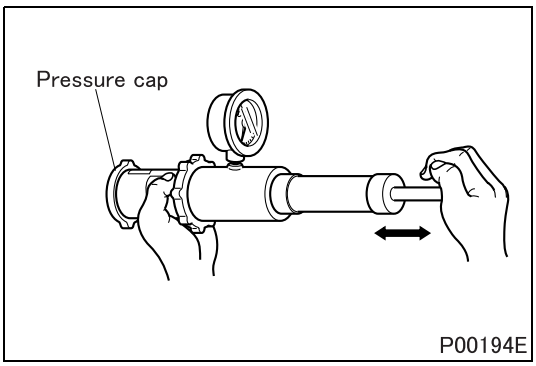

■ **Inspection: Pressure cap**

(1) Pressure valve opening pressure

- Replace the pressure cap if the measured value deviates from the standard value range.

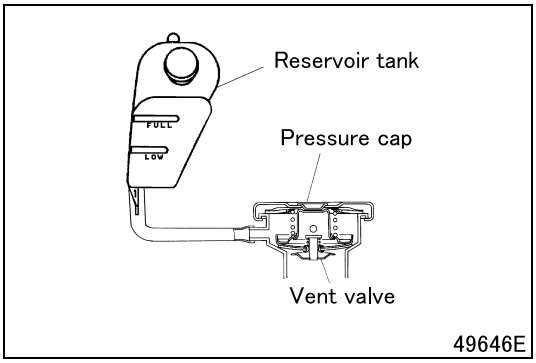

(2) Inspection of vent valve

- Before starting the inspection, check the level of coolant in the reservoir tank.
- Run the engine at full speed. Stop the engine when the level of coolant in the reservoir tank noticeably rises.
- Wait until the coolant temperature drops to the ambient temperature. Then, check if the coolant in the reservoir tank has returned to the same level as that confirmed before the engine was started.
- If the coolant has failed to return to its original level, the vent valve is defective. In this case, replace the pressure cap.

CAUTION ⚠

- **Be aware that removing the pressure cap before the coolant cools down to the ambient temperature will result in loss of vacuum in the radiator, which disables the coolant from being returned to the reservoir tank.**

Group 15

Intake and Exhaust

Table of Contents

Back

Home

MITSUBISHI FUSO TRUCK OF AMERICA, Inc.

Pub.No.TWSE0805-15

INDEX

SPECIFICATIONS 15-2

STRUCTURE AND OPERATION
1. Air Cleaner 15-2
2. Turbocharger 15-3
3. Turbocharger Control System 15-4
4. Diesel Particulate Filter Regeneration Control System 15-8

TROUBLESHOOTING 15-18

ON-VEHICLE INSPECTION AND ADJUSTMENT
1. Measurement of Turbocharger Boost Pressure 15-20
2. Cleaning and Inspection of Air Cleaner Element 15-21
3. Diesel Particulate Filter Unit Inspection for Clogging and Cleaning the Diesel Particulate Filter Unit 15-22
4. Resetting the DPF-related Information (Resetting Electronic Control Unit) 15-26

AIR DUCT AND AIR CLEANER
<EXCEPT CREW CAB> 15-30
<CREW CAB> 15-34

TURBOCHARGER 15-38

INTERCOOLER 15-44

INTAKE MANIFOLD 15-48

EXHAUST MANIFOLD 15-50

EXHAUST PIPE 15-52

DIESEL PARTICULATE FILTER 15-54

SPECIFICATIONS

Item		Specifications
Air cleaner element		Filter paper type
Turbocharger	Model	TD05
	Manufacturer	Mitsubishi Heavy Industries, Ltd.
Intercooler		Tube and corrugated fin type air-to-air heat exchanger
DPF (Diesel Particulate Filter) type		Regeneration control type diesel particulate filter system

STRUCTURE AND OPERATION

1. Air Cleaner

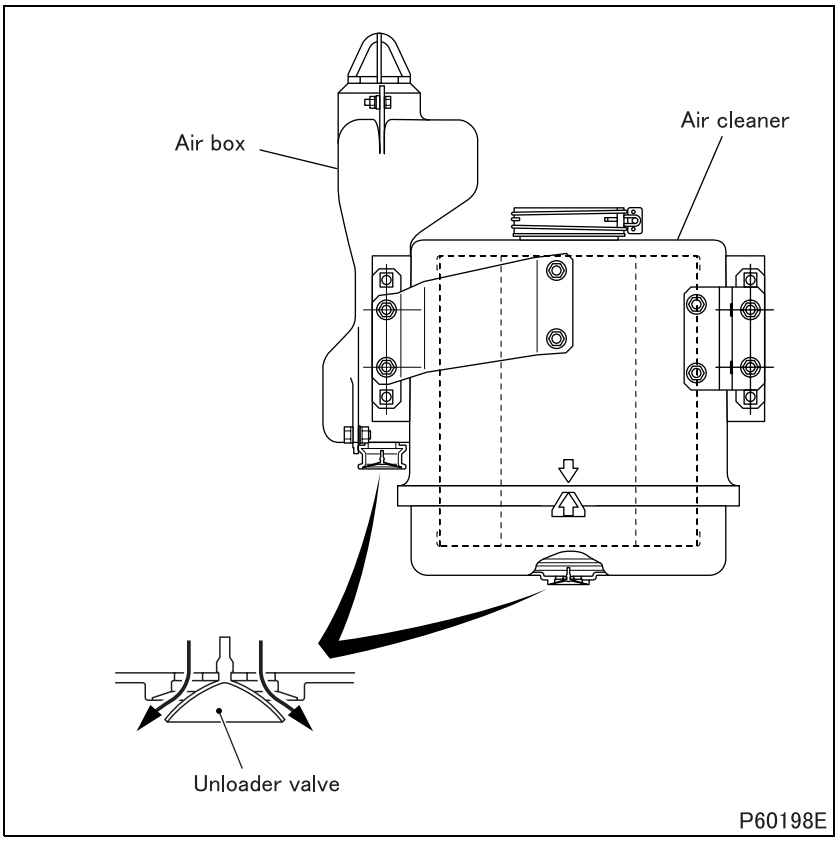

- The air cleaner is a single element type.
- When the engine slows down below the predetermined speed, the level of vacuum changes and causes the unloader valve to vibrate. Vibration of the unloader valve allows the air cleaner to automatically discharge any water and dust that has accumulated in its inside.

2. Turbocharger

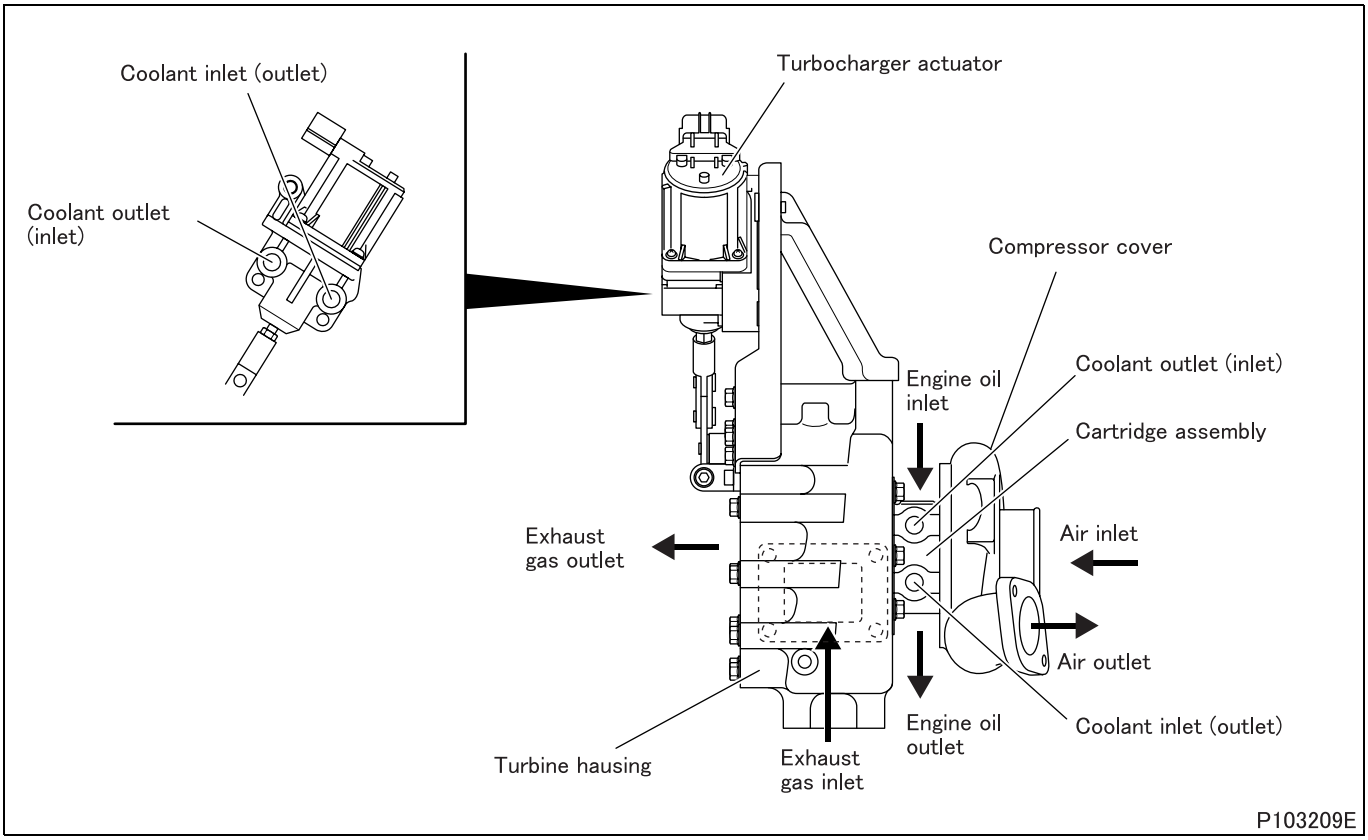

- TD05 model is equipped with turbocharger, which is a variable nozzle vane type turbocharger with adjustable, heat-resistive alloy turbine vanes provided at the turbine exhaust gas inlet port.

3. Turbocharger Control System

3.1 General description

- In the turbocharger control system, various engine-related information (engine speed, coolant temperature, accelerator position) and driving status are collected by the relevant sensors and are sent to the engine electronic control unit and turbocharger electronic drive unit which then control the engine based on the information received.
- The turbocharger actuator controls the opening of turbine vanes according to control signals to ensure low fuel consumption and high torque operation over the entire speed range.

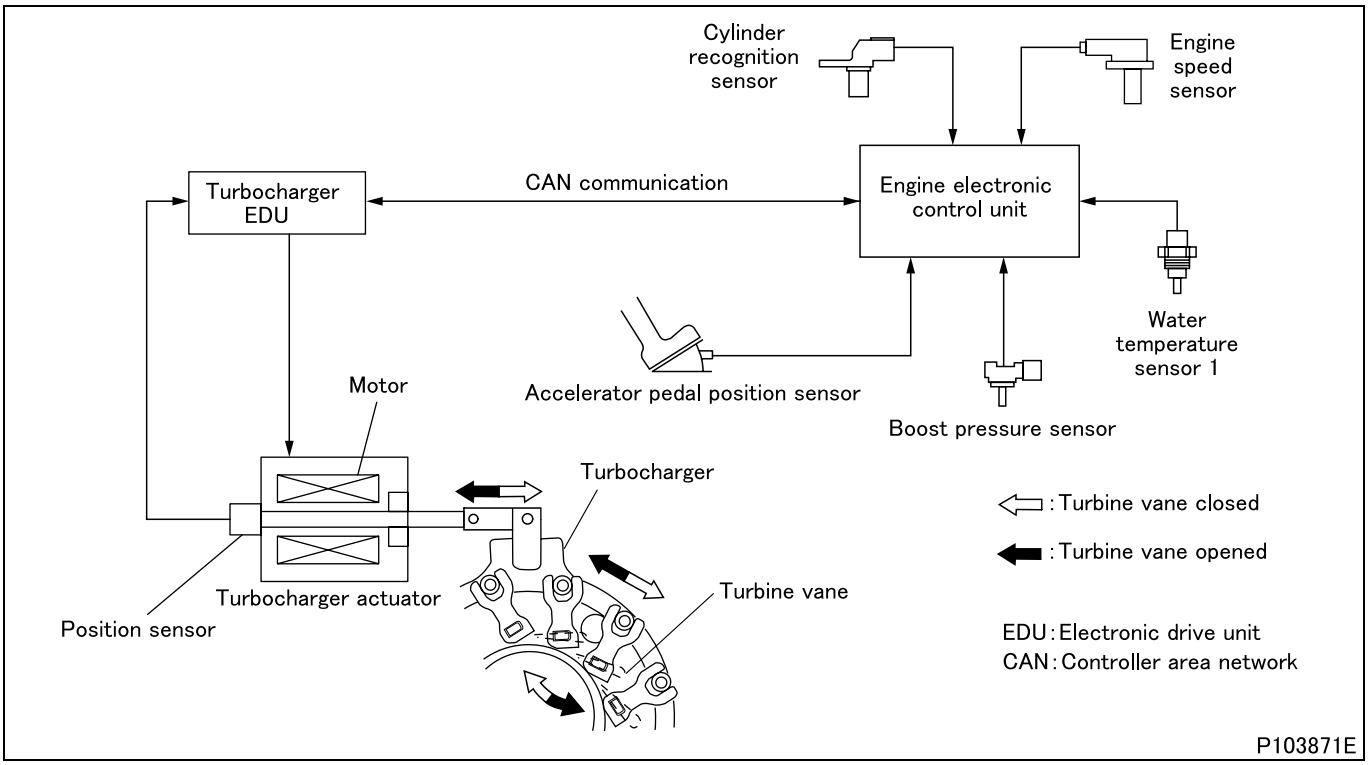

3.2 Electronic control system

(1) System block diagram

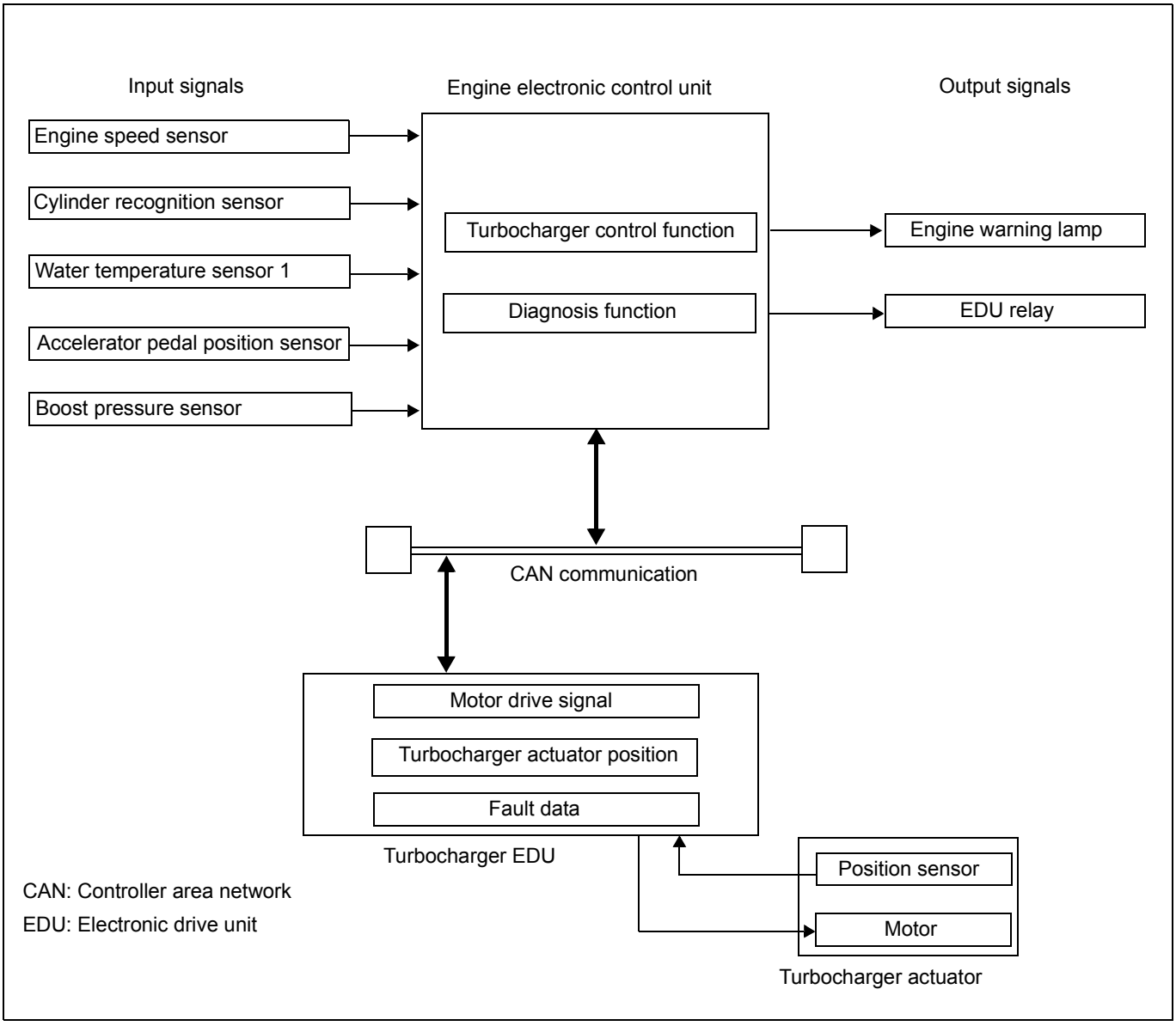

(2) Turbocharger control function

- In response to output data from various sensors, the engine electronic control unit determines the opening of turbine vanes as required by the engine operating status and sends necessary control signals to the turbocharger electronic drive unit. (target opening of turbine vanes)
- The turbocharger electronic drive unit activates the turbocharger actuator motor to detect the amount of resultant shaft position by means of the position sensor and sends it to the engine electronic control unit. (actual opening of turbine vanes)
  Thus, the target opening of turbine vanes can be accurately maintained as commanded by the engine electronic control unit.

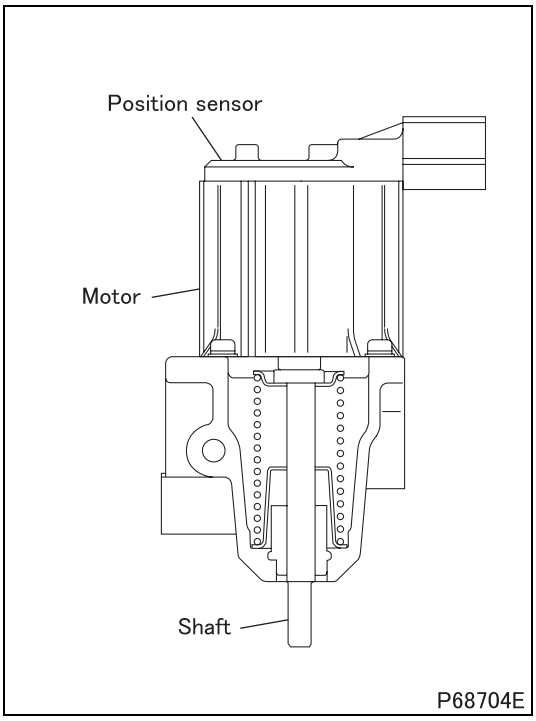

(2.1) Turbocharger actuator

- In response to command signals from the turbocharger electronic drive unit, the turbocharger actuator moves the shaft up and down by means of its DC motor to open and close the turbine vanes.

(3) Fault diagnosis function

- The engine electronic control unit continuously monitors the electronic drive units and sensors for faults. In the event that the engine electronic control unit finds a component faulty, it causes an indication to be made in the meter cluster to alert the driver. At the same time, it memorizes the fault location in the form of a diagnosis code and starts a control during fault.
- While the engine is running, the turbocharger electronic drive unit continuously monitor communication with the position sensor and motor of the turbocharger actuator communication with the engine electronic control unit. In the event that they identify a fault, they send fault data to the engine electronic control unit.
- While control necessitated by a fault is taking place, the system's functionality is limited to ensure vehicle and driver safety. It is possible to read the memorized diagnosis code using a Multi-Use Tester or from flashing of the warning lamp.
- The control during fault recovers by servicing the faults. However, for some diagnosis codes, the warning lamp stays illuminated until the normal signals are input for several times.
- Diagnosis codes shown by the Multi-Use Tester and those indicated by flashing of the warning lamp are different.
- The Multi-Use Tester is capable of showing more detailed diagnosis codes.

3.3 Electronic control unit wiring diagram

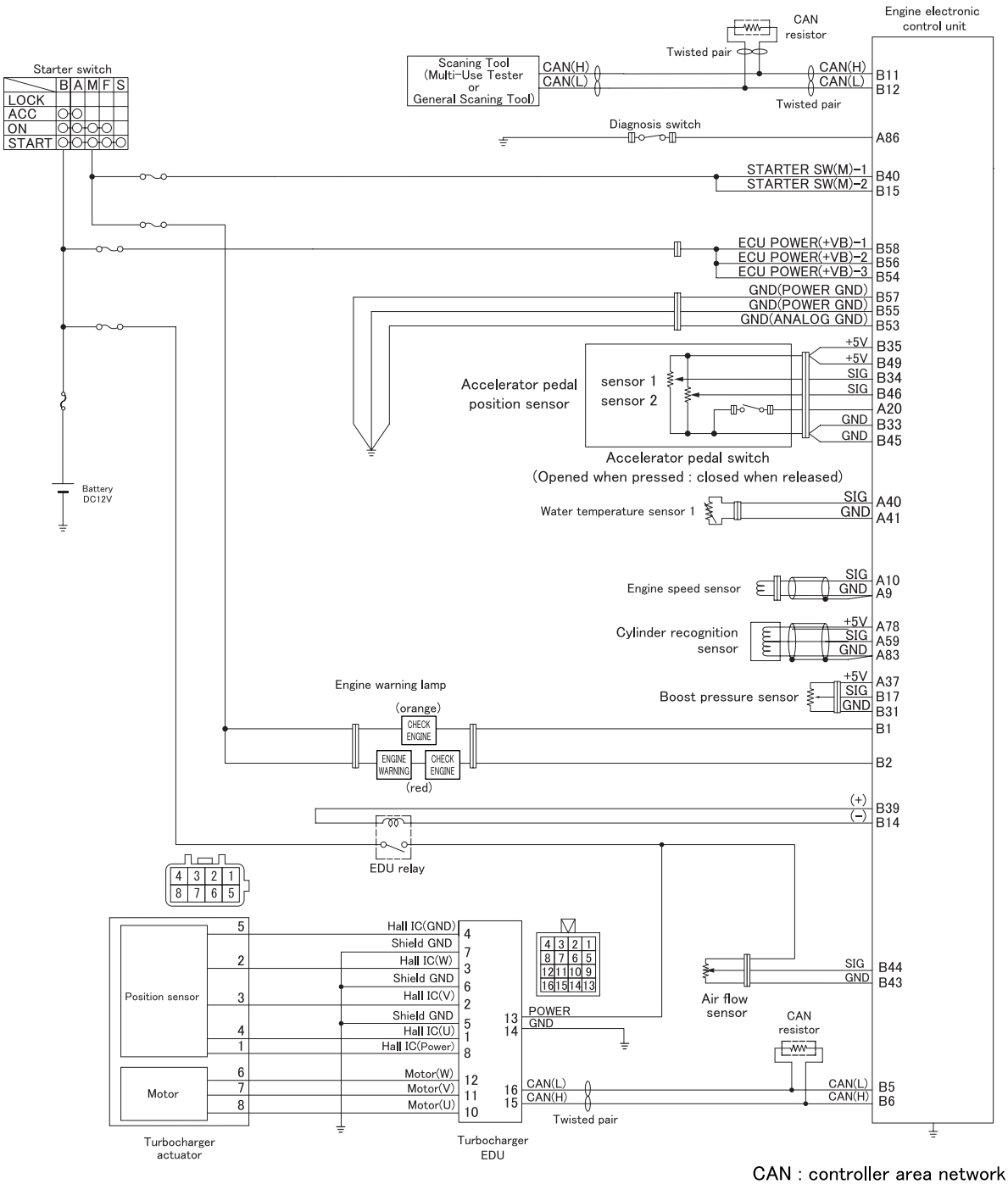

CAN : controller area network
EDU : electronic drive unit

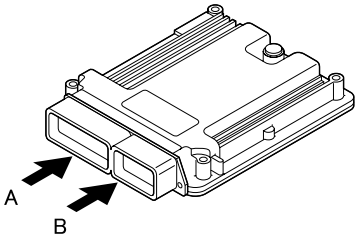

A : GE96A

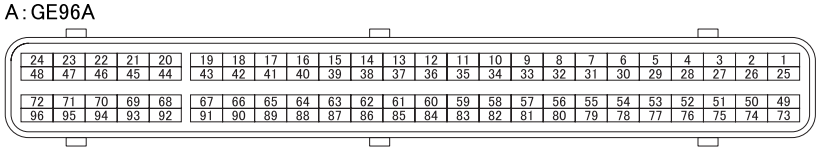

B : GE58A

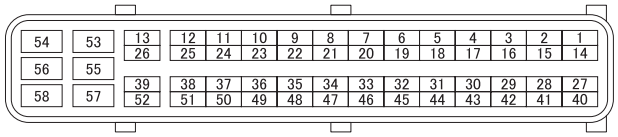

See Gr13EA for control concerning engine electronic control unit.

P107060E

4. Diesel Particulate Filter Regeneration Control System

4.1 General

- The diesel particulate filter regeneration control system burns and removes the particulate matter (PM) in the ceramic filter using high temperature exhaust gas to prevent excessive accumulation of particulate matter in the ceramic filter. Thus the diesel particulate filter is regenerated.
- The regeneration is divided into two types. One is the continuous regeneration utilizing high temperature exhaust gas during high-speed or high-load operations. The other is the automatic or parked regeneration which uses high temperature exhaust gas created by the regeneration control by the engine electronic control unit.
- For automatic or parked regeneration, the engine electronic control unit estimates the accumulated amount of particulate matter from the vehicle operating hours, driving distance and the engine condition during driving, and the regeneration is performed by controlling the fuel injection (amount and timing), turbocharger, exhaust shutter and intake throttle to make high temperature exhaust gas.

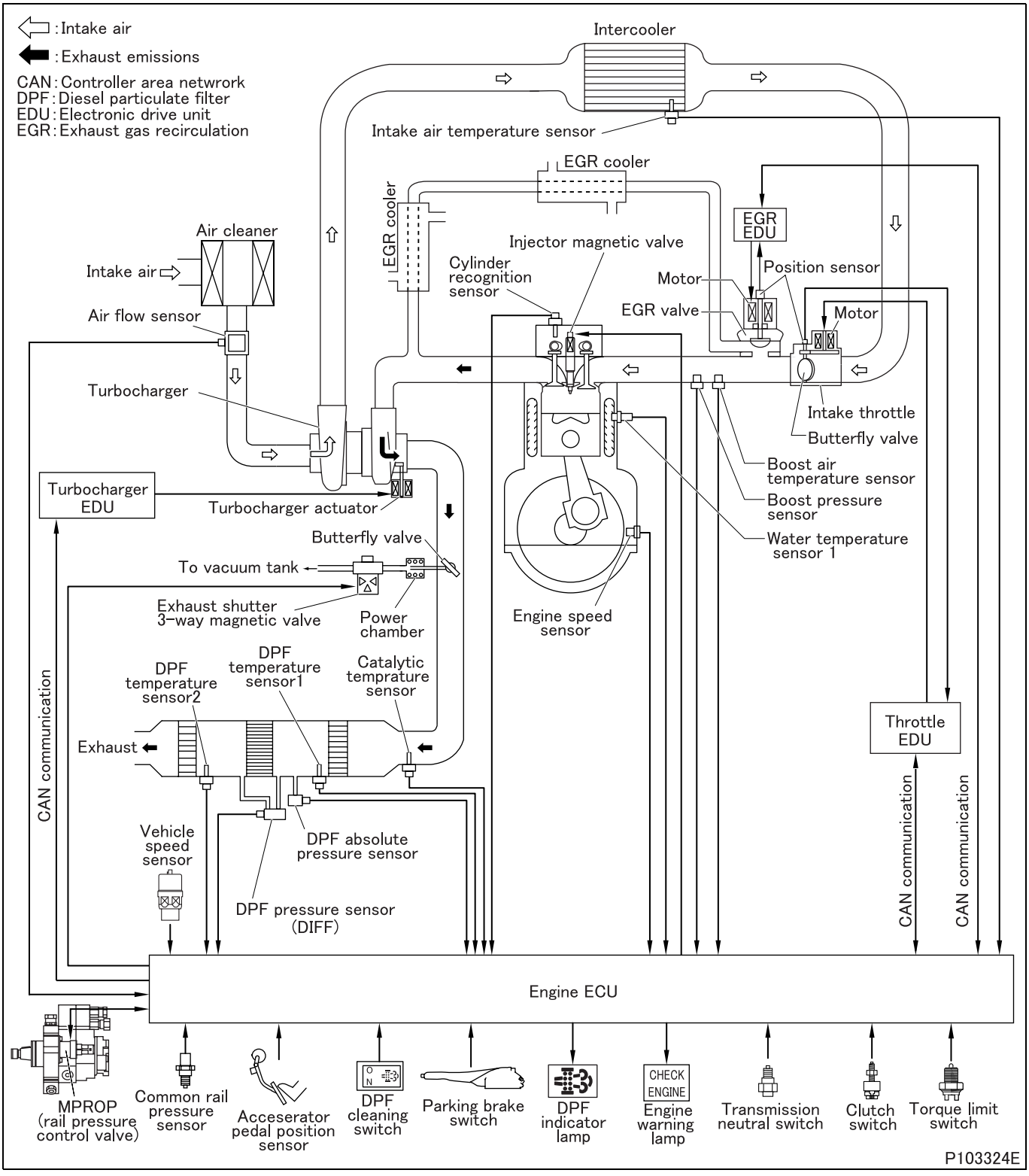
: Intake air
: Exhaust emissions
CAN : Controller area netwrork
DPF : Diesel particulate filter
EDU : Electronic drive unit
EGR : Exhaust gas recirculation
Intercooler
Intake air temperature sensor
EGR cooler
EGR cooler
Air cleaner
Intake air
Air flow sensor
Injector magnetic valve
Cylinder recognition sensor
EGR EDU
Position sensor
Motor
EGR valve
Motor
Turbocharger
Intake throttle
Butterfly valve
Boost air temperature sensor
Boost pressure sensor
Water temperature sensor 1
Turbocharger EDU
Turbocharger actuator
Butterfly valve
To vacuum tank
Exhaust shutter 3-way magnetic valve
Power chamber
Engine speed sensor
DPF temperature sensor2
DPF temperature sensor1
Catalytic temprature sensor
Exhaust
Throttle EDU
CAN communication
Vehicle speed sensor
DPF absolute pressure sensor
DPF pressure sensor (DIFF)
CAN communication
CAN communication
Engine ECU
MPROP (rail pressure control valve)
Common rail pressure sensor
Acceserator pedal position sensor
DPF cleaning switch
Parking brake switch
DPF indicator lamp
CHECK ENGINE
Engine warning lamp
Transmission neutral switch
Clutch switch
Torque limit switch
P103324E

4.2 Continuous regeneration and regeneration control

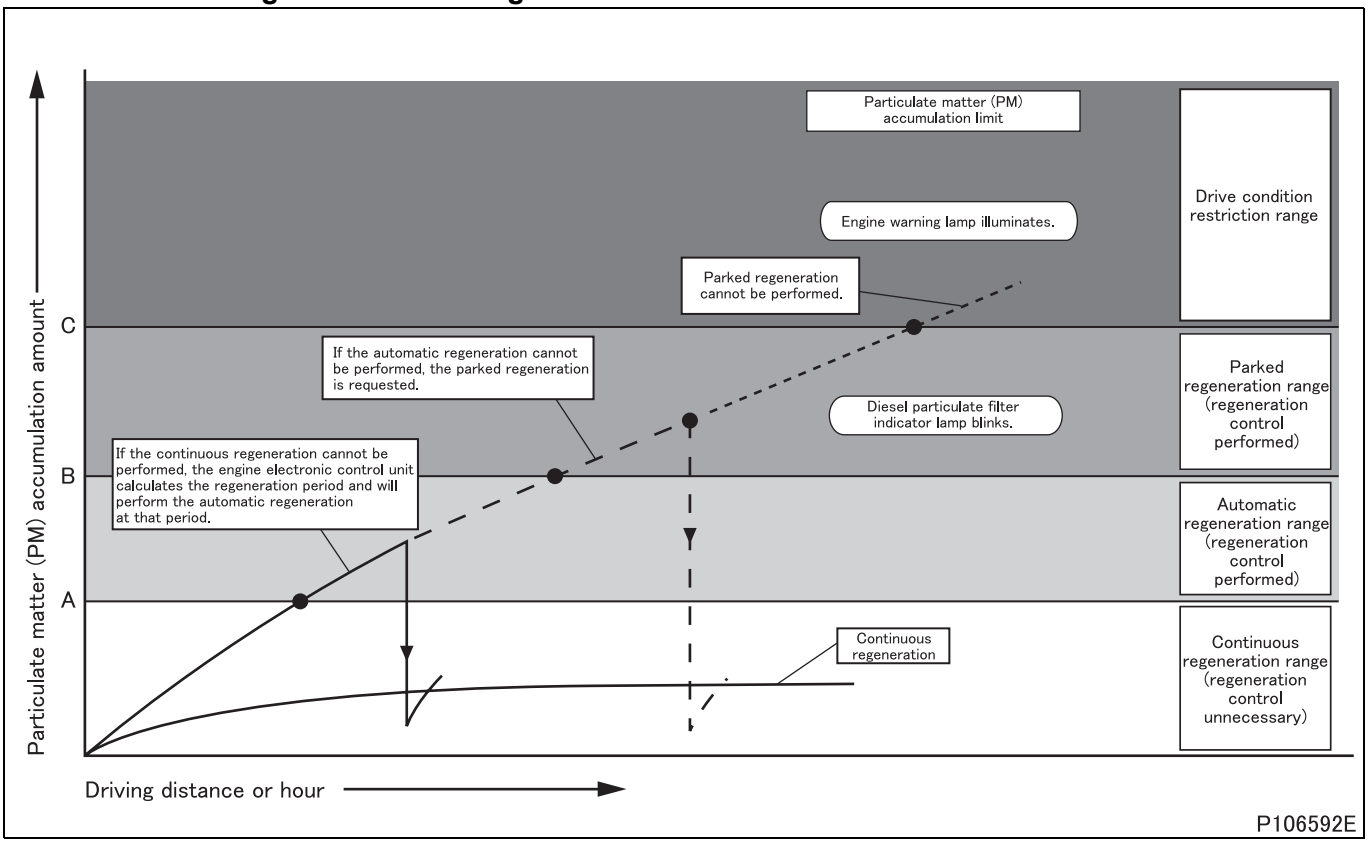

- The above diagram shows the relations between the driving distance or hours and the particulate matter accumulation amount, and the range of each diesel particulate filter regeneration operation.
- The particulate matter accumulation amount increases as the driving distance or hours increase. However, by conducting the regeneration operation that matches the vehicle operating condition and the particulate matter accumulation amount, the particulate matter accumulation amount is reduced to keep the performance of the diesel particulate filter.
- The regeneration is divided into two types – the continuous regeneration utilizing exhaust gas during normal driving operation and the automatic or parked regeneration which uses exhaust gas created by the regeneration control.

(1) Continuous regeneration

- When exhaust gas temperature is high during high-speed or high-load operation, NO_2 created by the action of the front oxidation catalyst continuously burns the particulate matter accumulated in the ceramic filter.

(2) Regeneration control

(2.1) Automatic regeneration

- When the particulate matter accumulation level is between A and B on the diagram, the engine electronic control unit decides the regeneration period and the automatic regeneration will be performed at an appropriate period. During regeneration, the unburnt fuel (HC) supplied by the post injection is oxidized by the front oxidation catalyst, and the oxidation heat from that reaction burns the particulate matter accumulated in the ceramic filter.

(2.2) Parked regeneration

- When the particulate matter accumulation level is between B and C on the diagram, the engine electronic control unit makes the diesel particulate filter indicator lamp blink. If the diesel particulate filter cleaning switch is turned on by the driver when the following conditions are met, the parked regeneration will take place.
  - Engine has warmed up (coolant temperature: 70°C {158°F} or higher)
  - Diesel particulate filter cleaning switch: ON (Press the switch until the diesel particulate filter indicator stays on.)
  - Accelerator pedal released (accelerator pedal position sensor: 0%)
  - Parking brake applied (parking brake switch: ON)
  - Transmission in neutral position (transmission neutral switch: OFF)
  - Clutch pedal released (clutch pedal switch: ON)
  - Power take-off inactive (power take-off switch: OFF)
- During regeneration, the diesel particulate filter indicator lamp blinks in two intervals (slow and fast) in accordance with the particulate matter accumulation amount.
- The exhaust gas temperature increase procedure and the particulate matter burning procedure are the same as that for the automatic regeneration.

(2.3) Restriction on drive conditions

- When the particulate matter accumulation level exceeds C on the diagram, the engine warning lamp illuminates and some restrictions are applied to the driving conditions.
- Under this restriction, parked regeneration will not take place even if the diesel particulate filter cleaning switch is turned on.

4.3 Diesel particulate filter unit

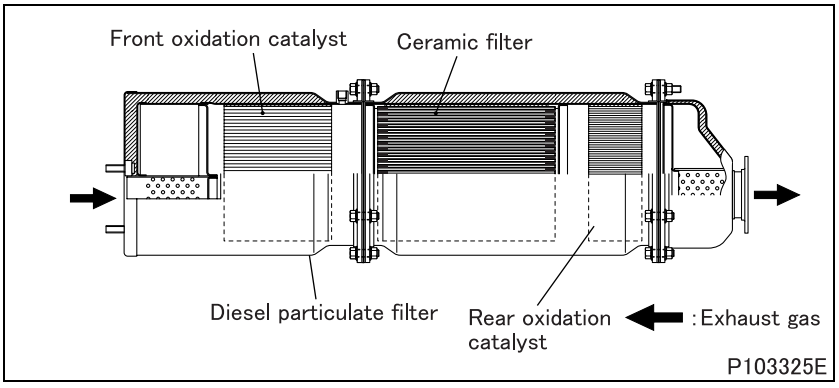

- Diesel particulate filter unit consists of the front oxidation catalyst, ceramic filter and rear oxidation catalyst.

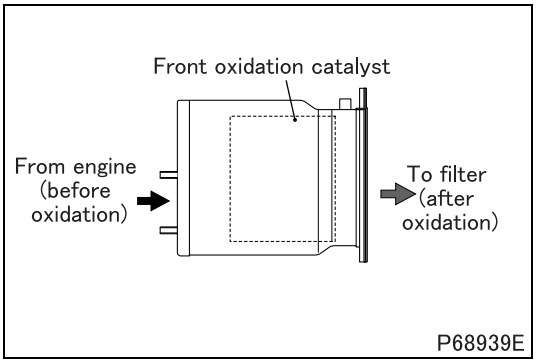

(1) Front oxidation catalyst

- In normal driving condition, unburnt fuel (HC) and part of the particulate matter in the exhaust gas from the engine is purified by this catalyst.
- During filter regeneration, the unburnt fuel (HC) supplied by the post injection is oxidized by the front oxidation catalyst, and the oxidation heat raises exhaust gas temperature.

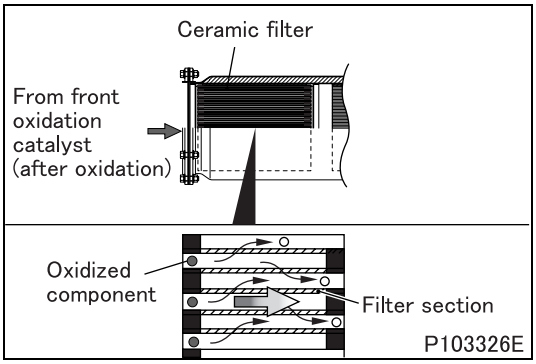

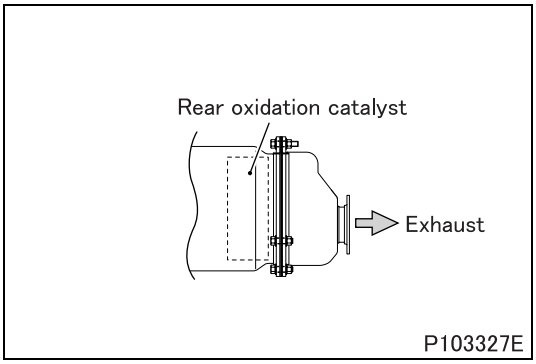

(2) Ceramic filter

- The ceramic filter is an aggregate of thin tubes, and these tubes are closed at either end alternatively. During normal operation, particulate matter is trapped when the exhaust gas enters a tube and passes through the wall of the tube (filter section) to the adjacent tube.
- During regeneration, the particulate matter accumulated in the filter is cleared by burning at high temperature. This, however, cannot remove the calcium (ash) contained in the engine oil and the ash will accumulate in the filter. The excessively accumulated ash may cause early clogging of the ceramic filter. Therefore, the ceramic filter must be cleaned periodically.

(3) Rear oxidation catalyst

- The rear oxidation catalyst oxidize and remove the components (HC and CO) which remain untreated through the diesel particulate filter.

4.4 Electronic control system

(1) System block diagram

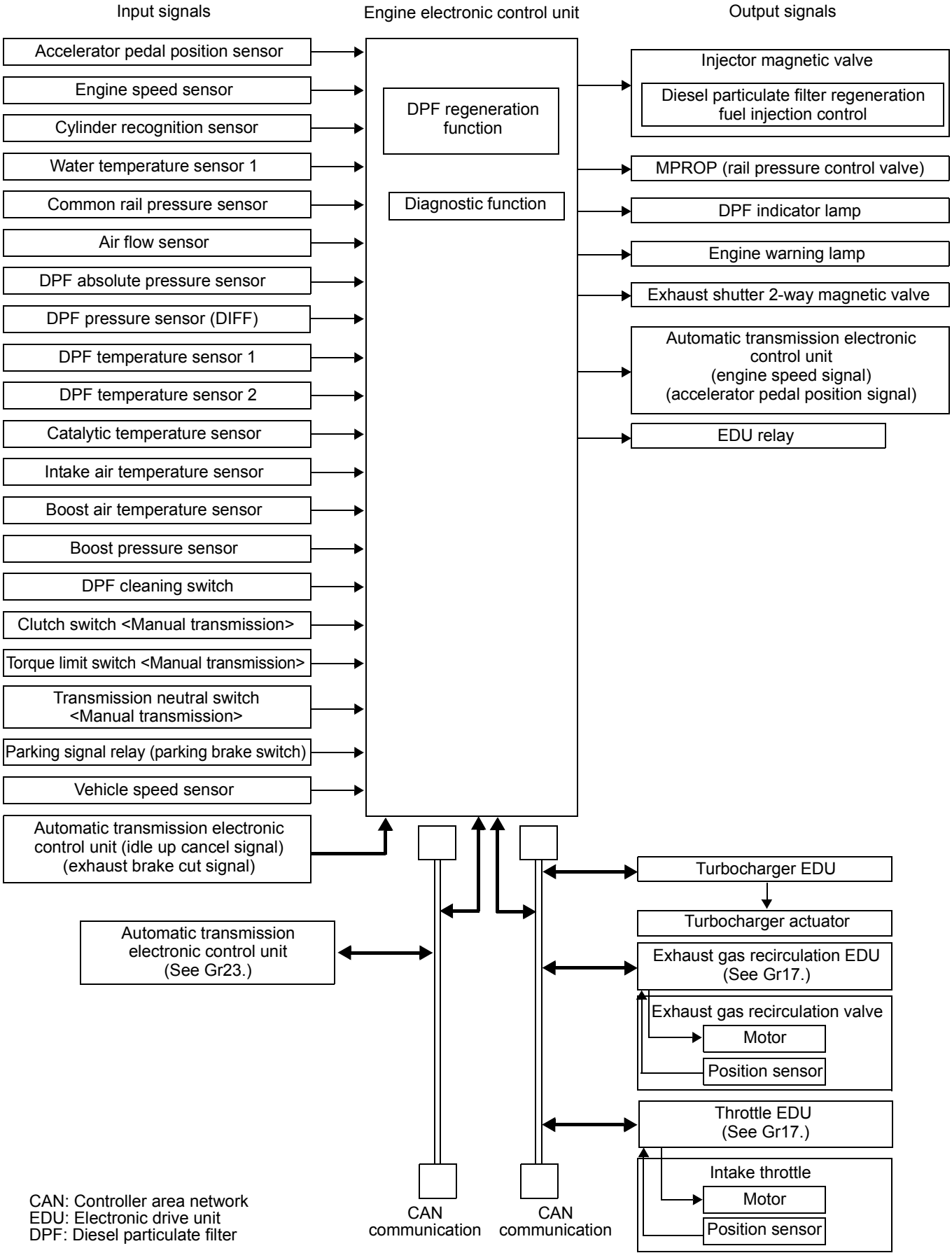

Part	Main function/operation
Accelerator pedal position sensor	Detection of extent of accelerator pedal depression
Engine speed sensor	Detection of engine speed
Cylinder recognition sensor	Cylinder recognition
Water temperature sensor 1	Detection of coolant temperature
Common rail pressure sensor	Sensing of common rail pressure
Air flow sensor	Detection of intake air flow rate
DPF absolute pressure sensor	Detection of DPF absolute pressure
DPF pressure sensor (DIFF)	Detection of DPF differential pressure
DPF temperature sensor 1	Detection of ceramic filter inlet temperature
DPF temperature sensor 2	Detection of ceramic filter outlet temperature
Catalytic temperature sensor	Detection of front catalyst inlet temperature
Intake air temperature sensor	Detection of upper stream side intake air temperature (in the intercooler)
Boost air temperature sensor	Detection of downstream side intake air temperature (after joining the exhaust gas recirculation)
Boost pressure sensor	Sensing of boost pressure
DPF cleaning switch	ON/OFF changeover of DPF parked regeneration
Clutch switch <Manual transmission>	Detection of released/pressed condition of clutch pedal (OFF with pedal released)
Torque limit switch <Manual transmission>	Detection of 1st and reverse positions
Transmission neutral switch <Manual transmission>	Detection of transmission neutral condition (OFF with transmission in neutral)
Parking signal relay (parking brake switch)	Detection of parking condition (turns ON when the parking brake is applied)
Injector magnetic valve	DPF regeneration fuel injection control
MPROP (rail pressure control valve)	Control of fuel injection pressure
DPF indicator lamp	Illuminates when the particulate matter accumulation in the DPF exceeds a certain value.
Engine warning lamp	Indication of system abnormalities Illuminates when the particulate matter accumulation in the DPF is excessive.
Exhaust shutter 2-way magnetic valve	ON/OFF changeover of exhaust shutter
Automatic transmission electronic control unit (engine speed data for automatic transmission control)	Output of engine speed for automatic transmission control
Automatic transmission electronic control unit (accelerator pedal position for automatic transmission control)	Output of extent of accelerator pedal depression for automatic transmission control
EDU relay	Switching ON/OFF supply of power to EGR EDU, turbocharger EDU and throttle EDU
Automatic transmission electronic control unit (idle up cancel signal and exhaust brake cut signal)	• Releasing the idle-up other than N range • Prohibition of the activation of auxiliary brake when the vehicle speed is 10 km/h or lower
Controller area network communication (automatic transmission electronic control unit)	• Engine data recognized by the engine electronic control unit are outputted to the controller area network bus to enable systems to obtain data that they need for control. • Each automatic transmission electronic control unit issues signals to the engine electronic control unit to enable it to effect engine control appropriate for each type of system control. (See Gr23 for control of automatic transmission electronic control unit.)
Controller area network communication (turbocharger EDU, throttle EDU and EGR EDU)	• Engine data recognized by the engine electronic control unit are outputted to the controller area network bus to enable systems to obtain data that they need for control. • Each EDU opens/closes the valves to increase exhaust gas temperature for DPF regeneration. (See Gr17 for control of throttle EDU and EGR EDU.)

(2) Fault diagnosis function

- The engine electronic control unit continuously monitors the electronic drive units and sensors for faults. In the event that the engine electronic control unit finds a component faulty, it causes an indication to be made in the meter cluster to alert the driver. At the same time, it memorizes the fault location in the form of a diagnosis code and starts a control during fault.
- While control necessitated by a fault is taking place, the system's functionality is limited to ensure vehicle and driver safety. It is possible to read the memorized diagnosis code using a Multi-Use Tester or from flashing of the warning lamp.
- Diagnosis codes shown by the Multi-Use Tester and those indicated by flashing of the warning lamp are different.
- The Multi-Use Tester is capable of showing more detailed diagnosis codes.

4.5 Electronic control unit wiring diagram

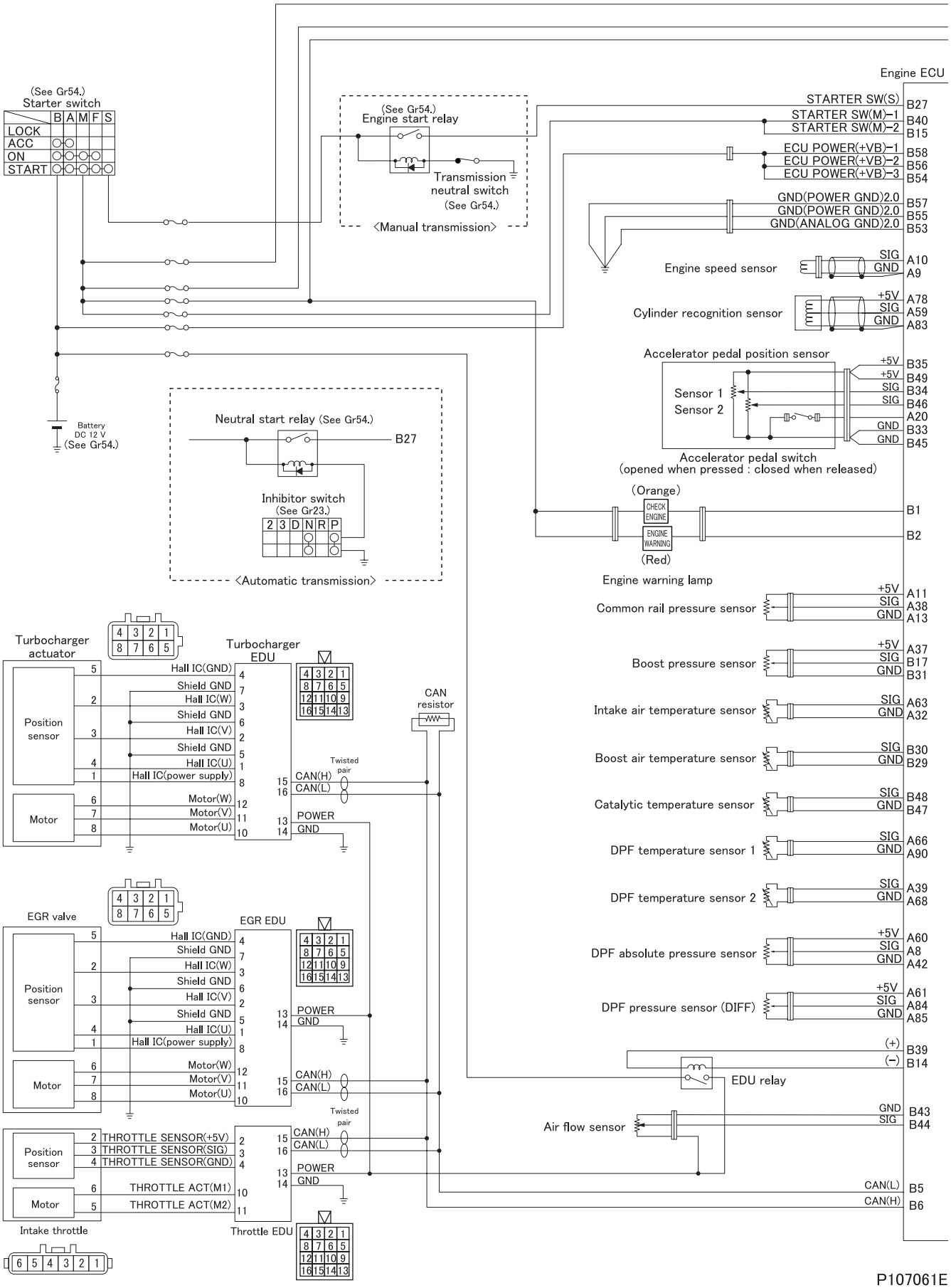

P107061E

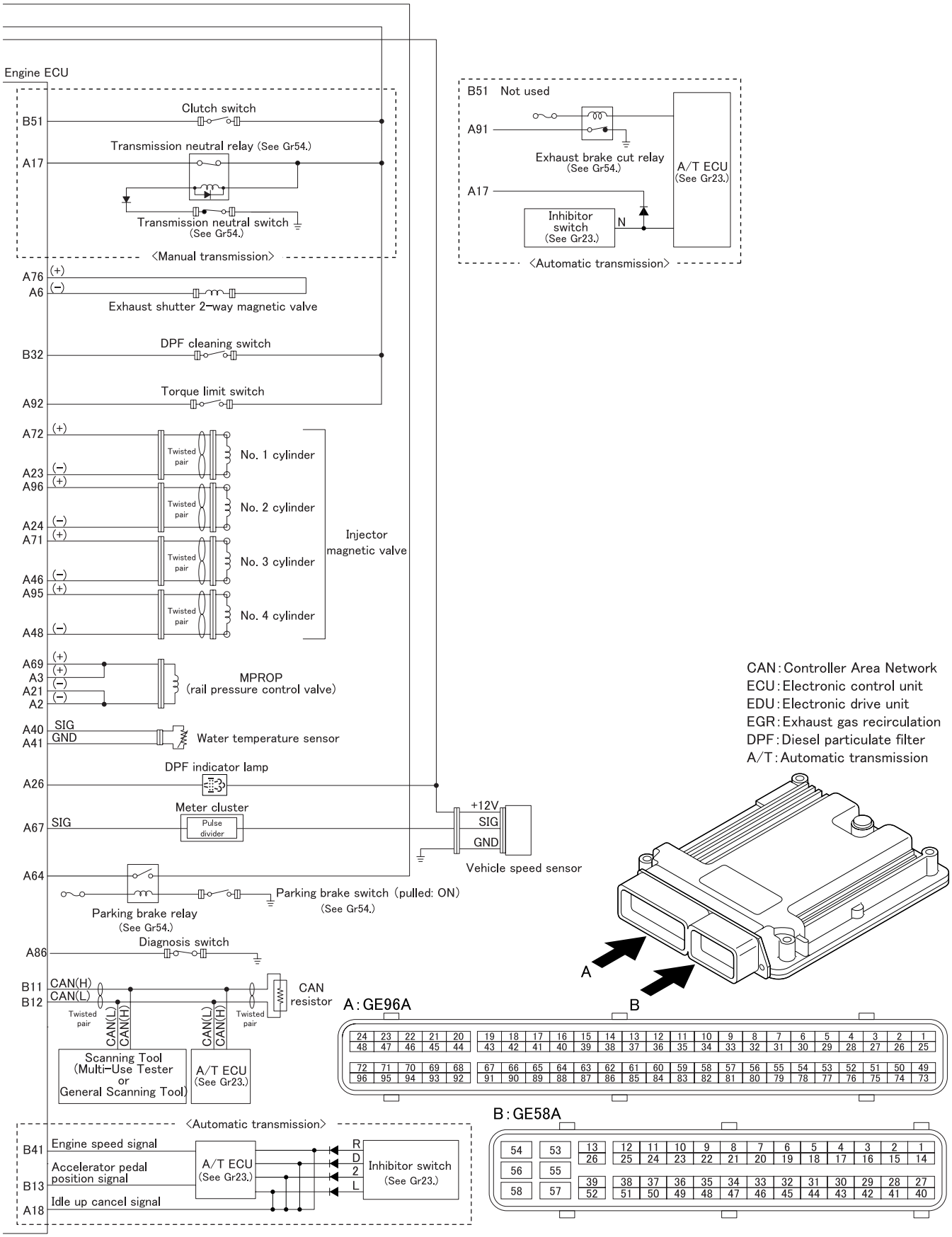

See Gr13EA for control concerning engine electronic control unit.

P103774E-2

Possible causes \ Symptoms			Engine is difficult to start	Exhaust gas is black	Exhaust gas is white	Engine output is insufficient	Fuel consumption is too high	Intake and exhaust system vibrates and/or makes abnormal noises	DPF regeneration is not established.	Reference Gr
Air cleaner		Clogged air cleaner element	O	O		O				
Turbocharger	Cartridge assembly	Defective bearing		O		O		O		
		Carbon deposits on turbine wheel		O		O				
		Interference between turbine wheel and turbine back plate		O		O		O		
		Interference between turbine wheel and turbine housing		O		O		O		
		Bent shaft		O		O		O		
		Damaged turbine wheel		O		O		O		
		Interference between compressor wheel and compressor cover		O		O		O		
		Seizure of thrust sleeve and/or thrust bearing		O		O		O		
		Damaged compressor wheel		O		O		O		
		Oil leakage due to worn piston ring and/or insert		O	O		O			
		Poorly installed piston ring					O			
		Unsmooth sliding of inner parts due to clogged lubricating oil pipe and/or eyebolt		O		O				
		Damaged oil seals due to clogged oil return pipe			O		O			
	Poorly mounted compressor cover			O		O	O	O		
	Poorly mounted turbine housing					O		O		
	Faulty operation of actuator								O	
Intercooler						O				
Throttle actuator		Butterfly valve stuck in closed position		O	O	O				Gr13EA
		Poorly adjusted butterfly valve		O	O	O				
Deformed front pipe and/or tail pipe								O		
Poorly installed front pipe and/or tail pipe								O		
DPF	Clogged filter		O			O				
	Damaged diesel particulate filter			O				O		
Inappropriate valve clearance				O						Gr11
Defective cylinder head gasket				O						
Worn valve and valve seat and/or carbon deposits				O						
Weakened valve springs				O						
Worn and/or damaged piston rings					O		O			
Worn and/or damaged piston ring grooves					O		O			
Malfunctioning cooling system				O						Gr14
Excessive engine oil level					O					Gr12
Seizure of main moving parts				O						Gr11

Symptoms / Possible causes	Engine is difficult to start	Exhaust gas is black	Exhaust gas is white	Engine output is insufficient	Fuel consumption is too high	Intake and exhaust system vibrates and/or makes abnormal noises	DPF regeneration is not established.	Reference Gr
Uneven or excessive fuel injection		O						Gr13EA
DPF temperature sensor 1 open-circuited or intermittent connection							O	

DPF: Diesel particulate filter

ON-VEHICLE INSPECTION AND ADJUSTMENT

1. Measurement of Turbocharger Boost Pressure

Service standards

Location	Maintenance item	Standard value	Limit	Remedy
–	Boost pressure	18 to 23 psi {37.5 to 47.6 in.Hg, 950 to 1210 mmHg}	–	Replace

1.1 Preparation

- Place the transmission in neutral. (in the parking range P for automatic transmissions.)
- Hold the steering wheel in neutral position.
- Turn off lamps and accessory devices not to increase the engine speed.
- Connect the Multi-Use Tester. (See Gr00.)
- If any fault exists (corresponding diagnosis code is issued), rectify it.
- Warm up the engine until the engine coolant has been heated to more than 60°C {140°F}. (Determine coolant temperature from service data [32: Water temperature].)
- Check that the non-load minimum speed (idling speed) is as specified. (See Gr13A.)

1.2 Measurement and correction of boost pressure

- Set the diagnosis switch to OFF (disconnect the fuse). (See Gr00.)
- Select [A4: VGT1] in [Actuator Test] of the Multi-Use Tester. Set [Target Value] to 80% and execute.
- When [A4: VGT1] is executed, the engine speed should be automatically increased to 2500 rpm.
- Maintain the state of [Target Value] having been executed (for 5 to 15 minutes) until boost pressure is stabilized.
- Measure the following items from among [Service Data].
  20: Atmospheric pressure (measured atmospheric pressure)
  21: Boost pressure (measured boost pressure)
  30: Intake Air Temp. (upper stream) (measured air temperature)
  After the measurements, set the diagnosis switch to ON (connect the fuse).
- Obtain boost pressure correction value respectively by calculating above Service Data.

[Calculation of atmospheric pressure correction value]

Atmospheric pressure correction value = Measured atmospheric pressure –100

[Calculation of boost pressure correction value]

- Obtain the boost pressure correction value using the following equation.
  Boost pressure correction value = Measured boost pressure – atmospheric pressure correction value – intake air temperature correction value
- If boost pressure correction value deviates from the standard value, replace the turbocharger.

2. Cleaning and Inspection of Air Cleaner Element

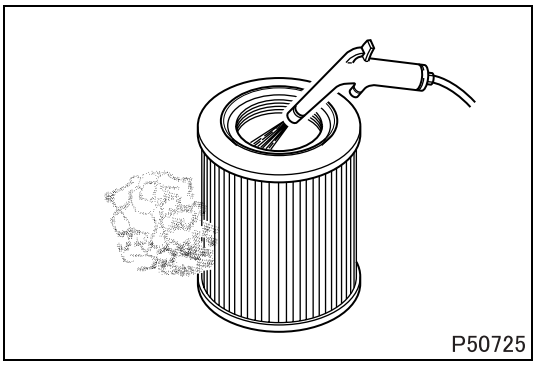
P50725

■ **Cleaning: Filter element**

- Blow a jet of compressed air at a pressure not higher than 685 kPa {100 psi, 7 kgf/cm^2} against the inside surfaces of the element.
- Move the compressed air jet up and down along all pleats of the filter paper element.

CAUTION ⚠

- **For the cleaning interval of the element, refer to the Owner's Handbook. Unnecessarily frequent cleaning may damage the element and can be the cause of dust and foreign objects being trapped in the engine.**
- **Do not strike the element or hit it against another object to remove dust.**
- **Do not blow compressed air against outside surfaces of the element.**

◆Inspection procedure◆

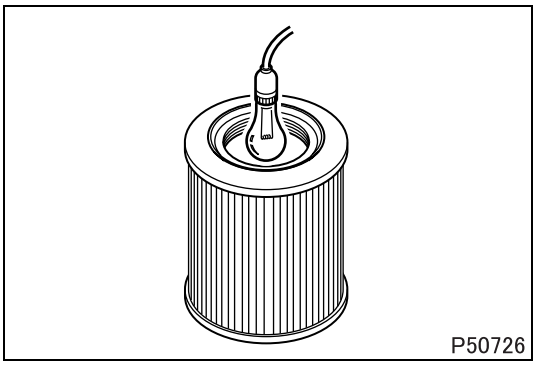
P50726

■ **Inspection: Element**

- Shine some electric light inside the element.
- Replace the element if thin spots or broken parts are evident in the filter paper, or if the packing at the top of the element is damaged.
  Also replace the element if the dust on the element is damp with oily smoke or soot, regardless of the replacement schedule.

◆Installation procedure◆

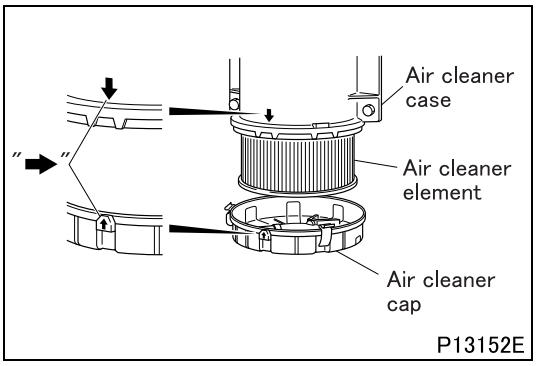

P13152E

■ **Installation: Air cleaner cap**

➡ : Alignment mark

3. Diesel Particulate Filter Unit Inspection for Clogging and Cleaning the Diesel Particulate Filter Unit

CAUTION ⚠

- **Diesel particulate filter has become very hot after the operation of engine. Cool down the diesel particulate filter sufficiently so as not to get burnt.**
- **The ceramic filter must be cleaned at first 176,000 km {110,000 miles} of driving, and then every 104,000 km {65,000 miles} of driving. Otherwise, ash will accumulate in the filter and the filter may be damaged.**

Service standards

Location	Maintenance item	Standard value	Limit	Remedy
–	Diesel particulate filter differential pressure (after regeneration and cleaning, at no-load max. speed)	Less than 15 kPa {2.2 psi, 0.2 kgf/cm^2}	15 kPa or higher {2.2 psi, 0.2 kgf/cm^2}	Replace

Special tools

Mark	Tool name and shape	Part No.	Application
a	*Pulse cleaner	(*X007954)	Washing of ceramic filter
b	Flange nut (M10) (not used by Donaldson)	MF434105	
c	Drain plug (M12 × 1.25)	MF665003	
d	Drain plug (M14 × 1.5)	MF665004	
e	Gasket (M12)	MF665004	
f	Gasket (M14)	MF660065	

*: Recommend Donaldson “Heavy Duty Diesel Engine DPF Pulse Cleaner” to cleaning the DPF filter soot.
( ): reference No.

3.1 Preparation

- Place the transmission to neutral position.
- Turn the steering wheel in neutral position. Apply the parking brake securely.
- Turn off the air conditioner not to increase the engine speed.
- Connect the Multi-Use Tester. (See Gr00.)
- Check if there is any diagnosis code stored in the memories of the electronic control units. Repair if any fault is found.
- Warm up the engine until the coolant temperature becomes 70°C {158°F}. (Check this by Multi-Use Tester service data “35: coolant temperature”.)

3.2 Inspection procedure

- Perform the inspection in accordance with the following flowchart.

CAUTION ⚠

- **The differential pressure of diesel particulate filter, that is, the pressure difference between the inlet and outlet of the diesel particulate filter, may exceed 30 kPa {4.4 psi, 0.3 kgf/cm^2} due to the clogging of the ceramic filter. If the diesel particulate filter regeneration is performed using Multi-Use Tester actuator test "DPF regeneration (park)", the abnormal combustion of the particulate matter may make the diesel particulate filter excessively high temperature, resulting in damage of the diesel particulate filter. Before performing the diesel particulate filter regeneration, therefore, be sure to check that the diesel particulate filter differential pressure is less than 30 kPa {4.4 psi, 0.3 kgf/cm^2}.**
- **When replacing the electronic control unit to a new one, current ash accumulation data must be copied to the new electronic control unit.**
- **For data copying procedure, consult your nearest MITSUBISHI FUSO dealer or MITSUBISHI FUSO TRUCK OF AMERICA, Inc.**

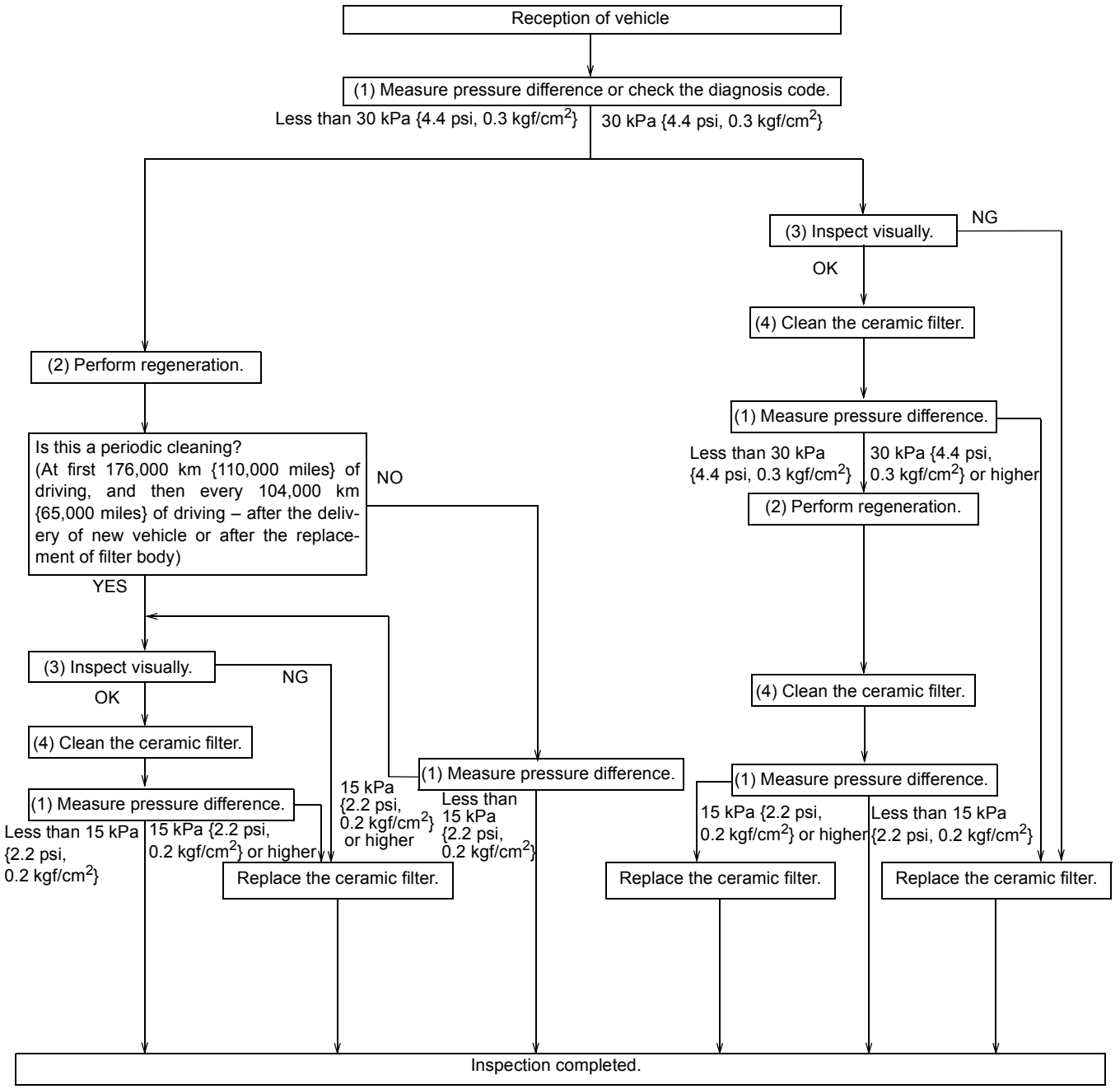

(1) Measurement of pressure difference

- Measure the pressure difference with the accelerator pedal fully pressed.
- Measurement can be performed using Multi-Use Tester service data “32: DPF pressure difference”.

(2) Regeneration

- Perform Multi-Use Tester actuator test “A5: DPF regeneration (parked)”.

CAUTION ⚠

- **The exhaust gas during regeneration is extremely hot. Be sure to confirm that there is no flammables around the rear of the vehicle.**

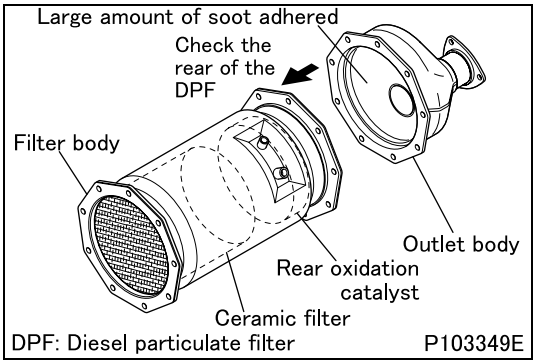

DPF: Diesel particulate filter P103349E

(3) Visual inspection

- Disassemble the diesel particulate filter and check the following.
  - Check if a large amount of soot adheres inside the outlet body.
  - Check the rear oxidation catalyst behind the ceramic filter for damage.
- If a large amount of soot adheres inside the outlet body or if a damage is found on the rear oxidation catalyst, engine-related fault may be suspected. Replace the diesel particulate filter.

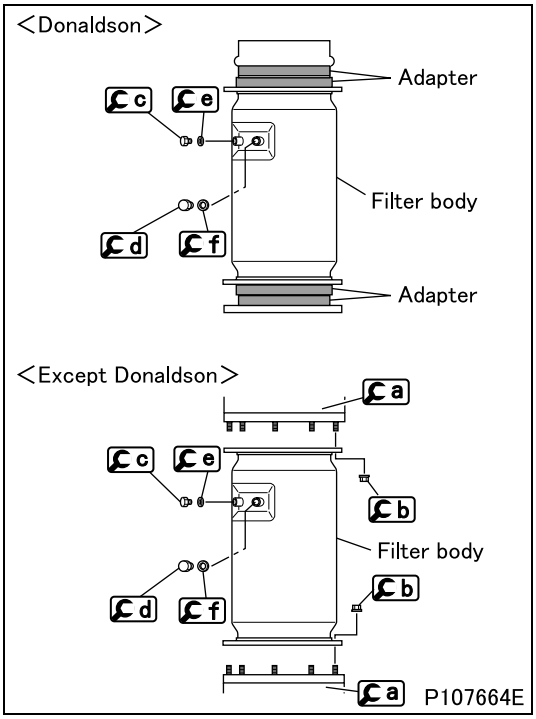

(4) Cleaning

- Fit the adapter to the filter body. <Donaldson>
- Fit a to the filter body with b and tighten b to the specified torque (43 N·m {32 ft.lbs, 4.4 kgf·m}). <Except Donaldson>
- Fit c and e to the sensor mounting hole on the filter body and tighten them to the specified torque (30 N·m {22 ft.lbs, 3.1 kgf·m}).
- Fit d and f to the sensor mounting hole on the filter body and tighten them to the specified torque (40 N·m {30 ft.lbs, 4.1 kgf·m}).

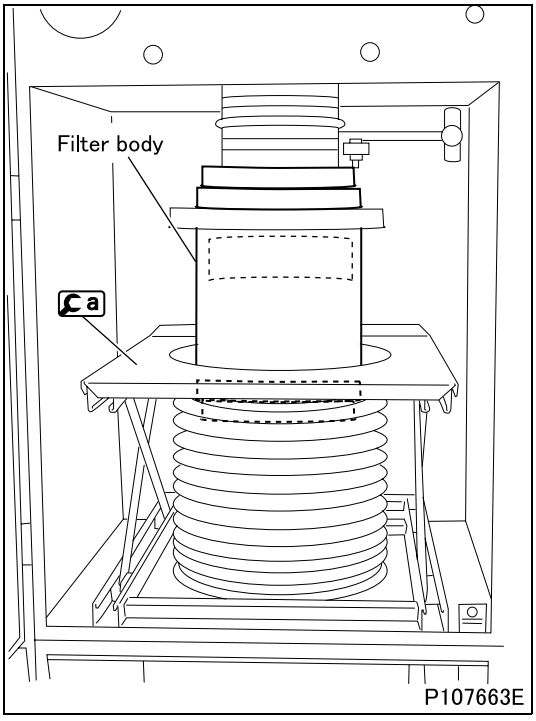

- Set the filter body in a with its rear oxidation catalyst side upward.
- Be sure to fit a and the filter body with no air leaks between them.
- Set the air pressure (refer to its instruction manual).
- Set the timer to about 15 minutes (refer to its instruction manual) and perform cleaning.
- For the handling procedure of a, refer to its instruction manual.

4. Resetting the DPF-related Information (Resetting Electronic Control Unit)

- On the regeneration control type as diesel particulate filter system, the engine electronic control unit stores many DPF-related information to control the diesel particulate filter regeneration as diesel particulate filter history.
- This history is automatically reset by the engine electronic control unit when the diesel particulate filter regeneration is performed.
- If the ceramic filter is replaced or cleaned without regeneration, reset the DPF history using Multi-Use Tester as follows.

4.1 Preparation

- This operation should be performed under the following conditions.
  - Starter switch: ON (but do not start the engine)
  - Vehicle parked
  - Diagnosis switch: ON (fuse installed)
  - Transmission: Neutral (or P position for automatic transmission)

4.2 Resetting procedure

(1) Error while operating the Multi-Use Tester

[Communication error] screen

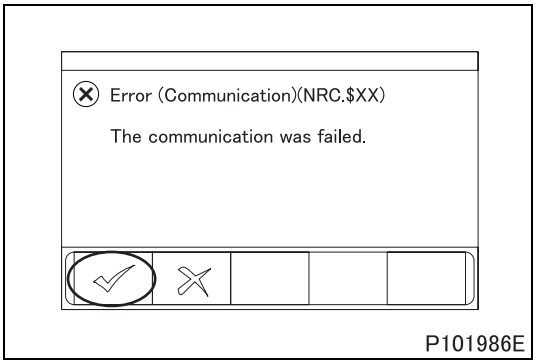

P101986E

- This screen will appear when a reject response signal is sent from the engine electronic control unit to the Multi-Use Tester while performing any operation.
- In this case, check if the conditions for the execution of the procedure are satisfied and retry from the beginning.
- Click “OK”.

(2) System selection

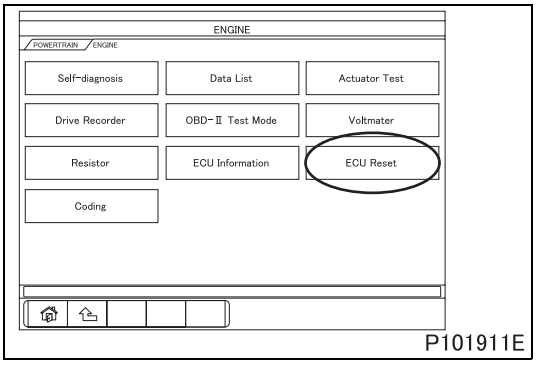

P101911E

- From the System selection menu, select “Engine/Transmission”. The engine control-related menu will appear.
- Select “ECU Reset”.

(3) ECU reset function selection

[ECU reset] screen

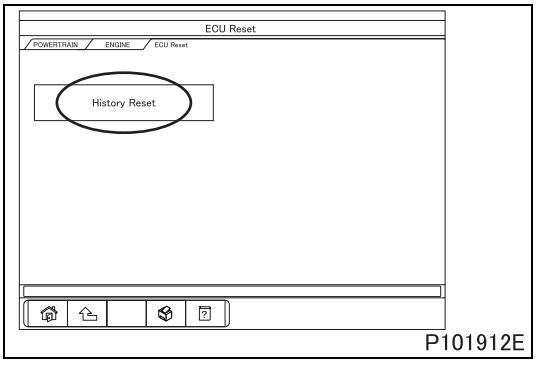

P101912E

- Select “History Reset”.

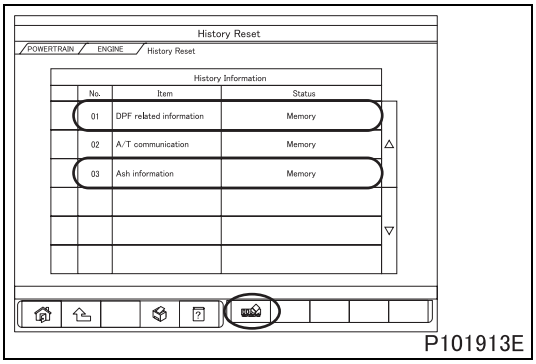

P101913E

(4) History reset

[History reset] screen

- Depending on the action performed on the ceramic filter, the contents of resetting differ.
  Filter replacement: 01 “DPF-related information”
  Filter cleaning: 03 “Ash information”
- Click “Reset” button.
  If the status column shows “No memory stored”, no resetting action required. Finish this procedure.

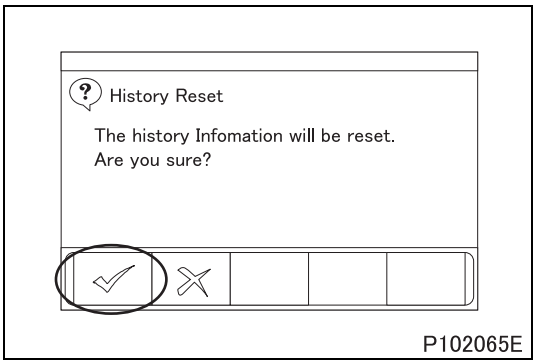

P102065E

[History reset confirmation] screen

- Click “OK” button.

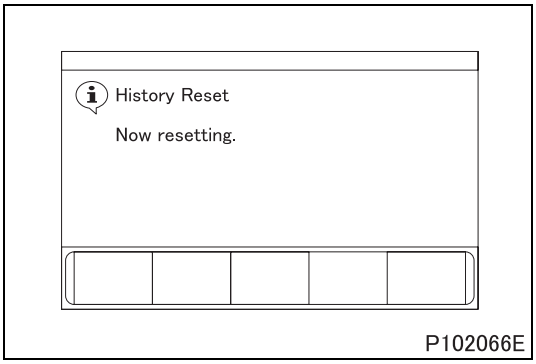

P102066E

[History resetting] screen

- During resetting, do nothing and wait for a while.

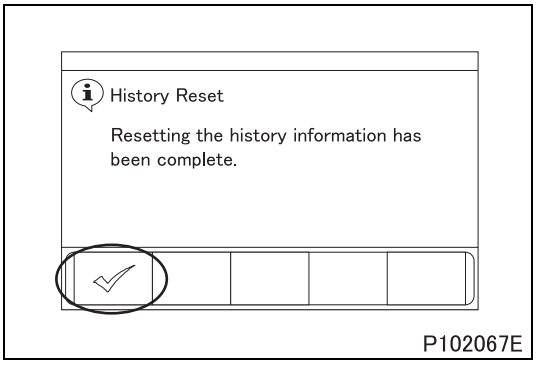

P102067E

[History reset completed] screen

- This screen will appear when resetting of the history has finished. Click “OK” button and return to [History reset] screen.

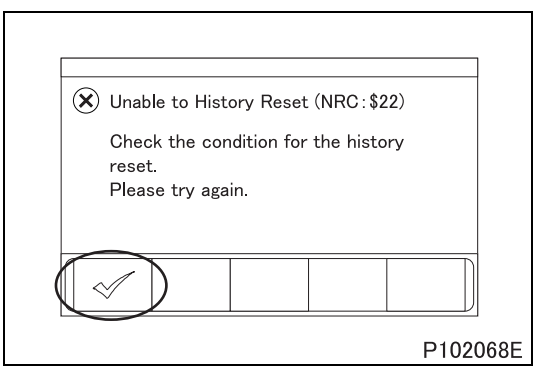

P102068E

[History reset condition error] screen

- This screen will appear when a failure signal is sent from the engine electronic control unit to the Multi-Use Tester during resetting.
- In this case, check if the Multi-Use Tester and the vehicle (engine electronic control unit) is connected correctly and if the conditions for the execution of this procedure are satisfied. Then click “OK” to return to the [History reset] screen.

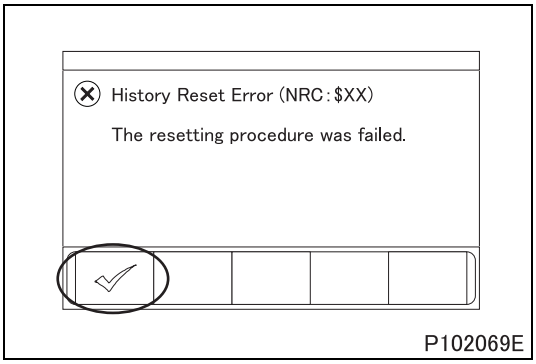

P102069E

[History reset failed] screen

- This screen will appear when the communication error between Multi-Use Tester and the engine electronic control unit or the resetting error occurs.
- In this case, check if the Multi-Use Tester and the vehicle (engine electronic control unit) is connected correctly and if the conditions for the execution of this procedure are satisfied. Then click “OK” to return to the [History reset] screen.

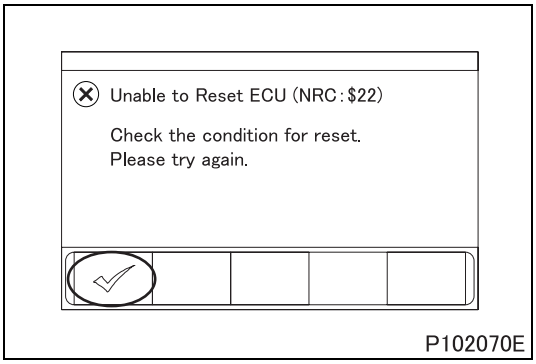

P102070E

[ECU reset condition error] screen

- This screen will appear when a execution failure signal is sent from the engine electronic control unit to the Multi-Use Tester during resetting.
- In this case, recheck the conditions of the vehicle and retry from the beginning.
- Click “OK” to return to the [History reset] screen.

M E M O

AIR DUCT AND AIR CLEANER <EXCEPT CREW CAB>

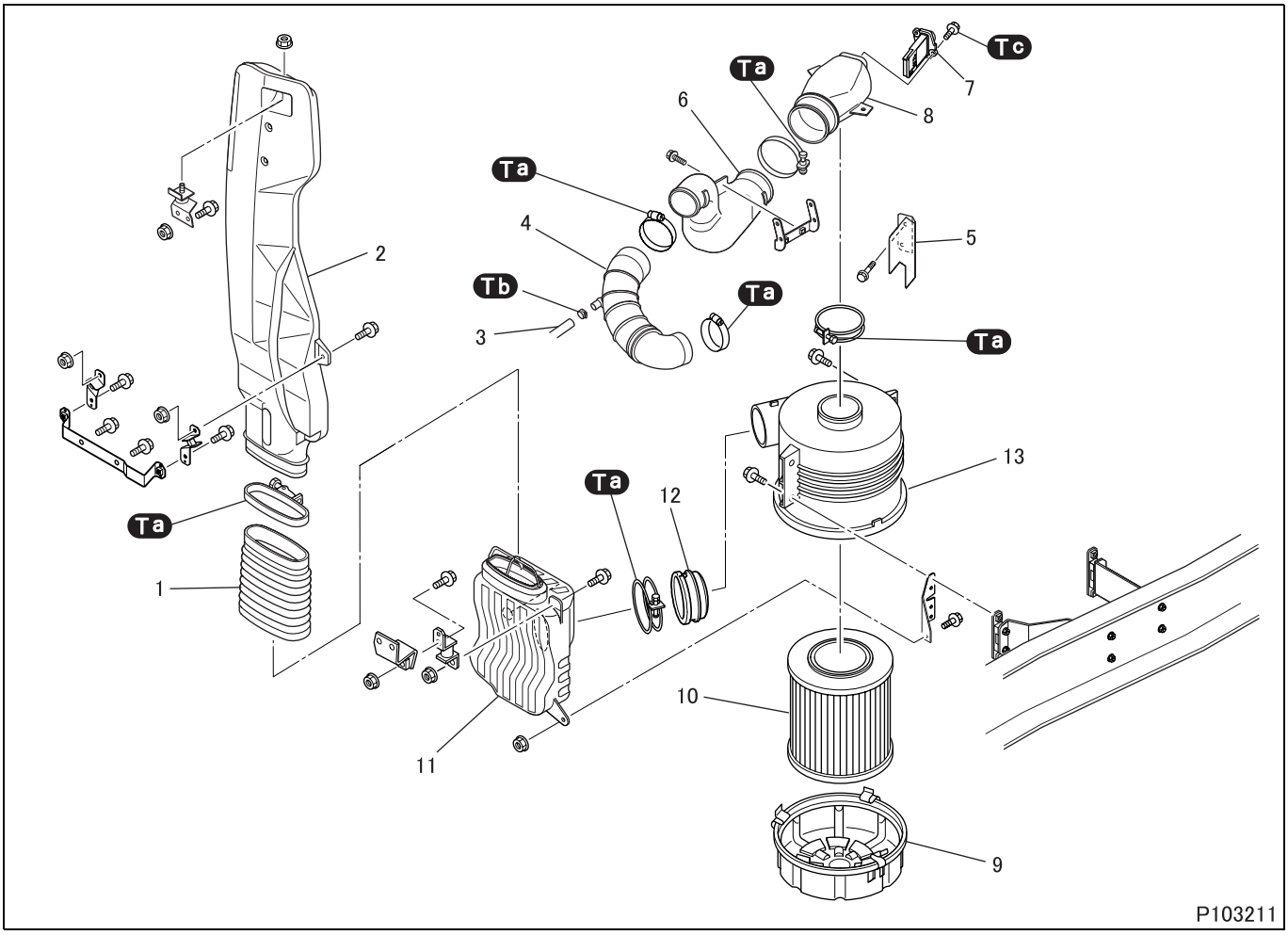

● **Disassembly sequence**

1 Connector
2 Air inlet duct
3 PCV hose
4 Air hose
5 Insulator
6 Air duct
7 Air flow sensor
8 Connector
9 Air cleaner cap
10 Air cleaner element
11 Air box
12 Rubber seal
13 Air cleaner case

⊗: Non-reusable parts
PCV: Positive Crankcase Ventilation

● **Assembly sequence**

Follow the disassembly sequence in reverse.

Tightening torque (Unit: N·m {ft.lbs, kgf·m})

Mark	Parts to be tightened	Tightening torque	Remarks
Ta	Clamp	3.0 to 3.4 {2.2 to 2.5, 0.3 to 0.35}	–
Tb	Clamp	9.0 to 11 {6.6 to 8.1, 0.9 to 1.1}	–
Tc	Bolt (air flow sensor mounting)	1.2 to 1.8 {0.9 to 1.3, 0.1 to 0.2}	–

Special tools

Mark	Tool name and shape	Part No.	Application
a	Pincer 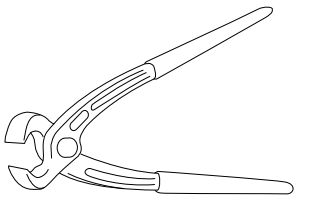 P103715	MH063865	Removal of hose clamp
b	Clamp installation tool 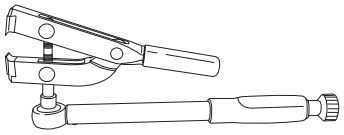 P103716	MH063866	Installation of hose clamp

◆Removal procedure◆

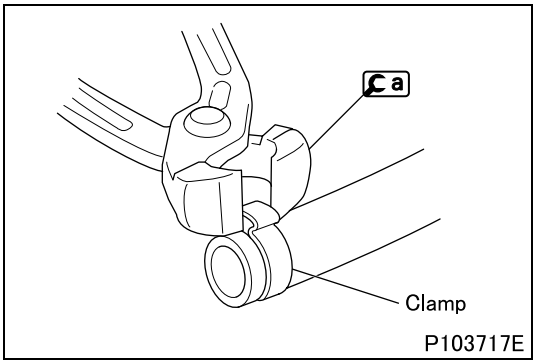

P103717E

■ **Removal: Clamp**

- To remove the clamp, cut the clamp using a.

◆Cleaning procedure◆

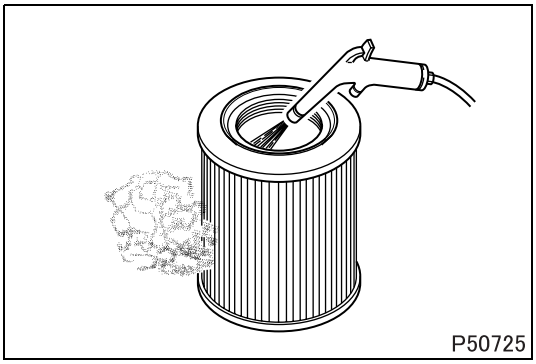
P50725

■ **Cleaning: Filter element**

- Blow a jet of compressed air at a pressure not higher than 685 kPa {100 psi, 7 kgf/cm^2} against the inside surfaces of the element.
- Move the compressed air jet up and down along all pleats of the filter paper element.

CAUTION ⚠

- **For the cleaning interval of the element, refer to the Owner's Handbook. Unnecessarily frequent cleaning may damage the element and can be the cause of dust and foreign objects being trapped in the engine.**
- **Do not strike the element or hit it against another object to remove dust.**
- **Do not blow compressed air against outside surfaces of the element.**

AIR DUCT AND AIR CLEANER <EXCEPT CREW CAB>

◆Inspection procedure◆

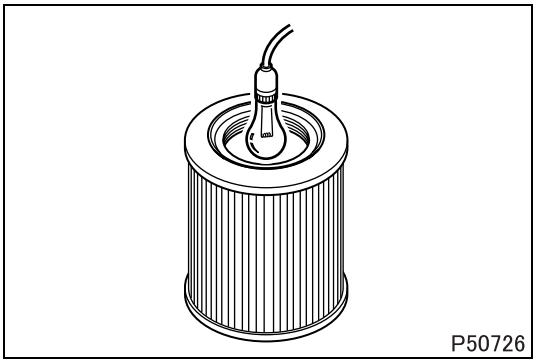

■ **Inspection: Element**

- Shine some electric light inside the element.
- Replace the element if thin spots or broken parts are evident in the filter paper, or if the packing at the top of the element is damaged.
  Also replace the element if the dust on the element is damp with oily smoke or soot, regardless of the replacement schedule.

◆Installation procedure◆

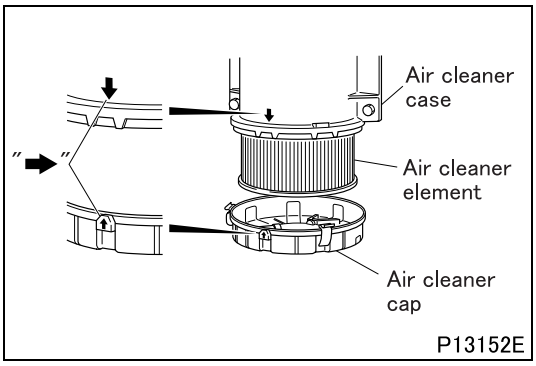

■ **Installation: Air cleaner cap**

➡: Alignment mark

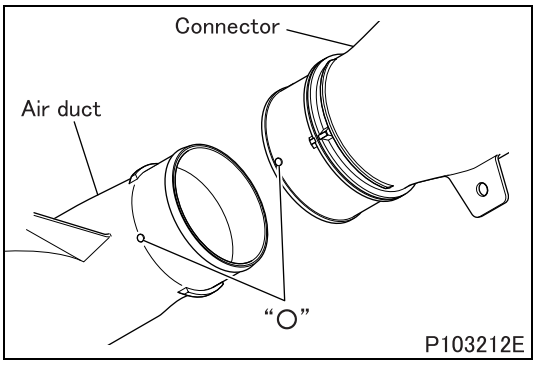

■ **Installation: Air duct**

- Align the marks " ○ " on air duct and push it in until it hits stopper.

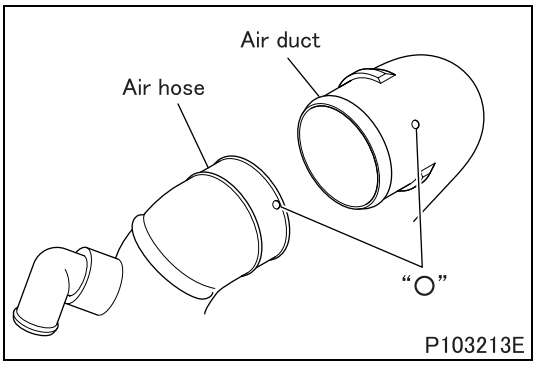

■ **Installation: Air hose**

- Align the marks " ○ " on air hose and push it in until it hits stopper.

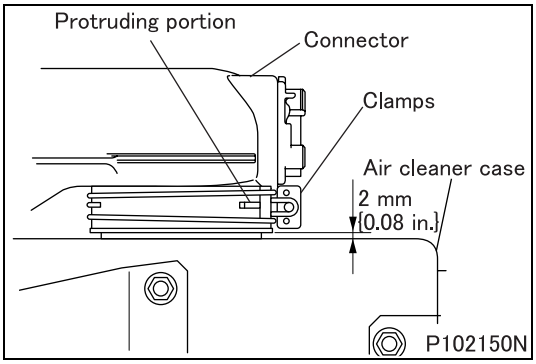

■ **Installation: Connector**

- The protruding portion of the connector is put between clamps.
- Installation is such that the space between the connector and the air cleaner case measures the amount shown in the figure.

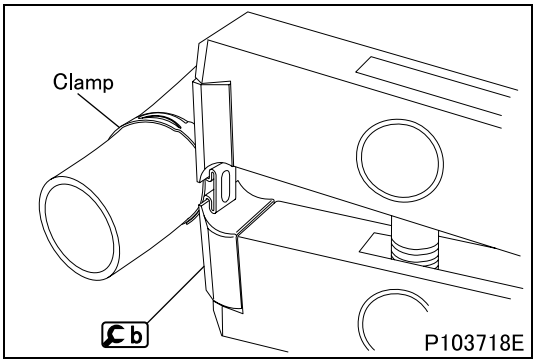

■ **Installation: Clamp**

- Pinch the projecting part of the clamp with b and tighten to the specified torque.

AIR DUCT AND AIR CLEANER <CREW CAB>

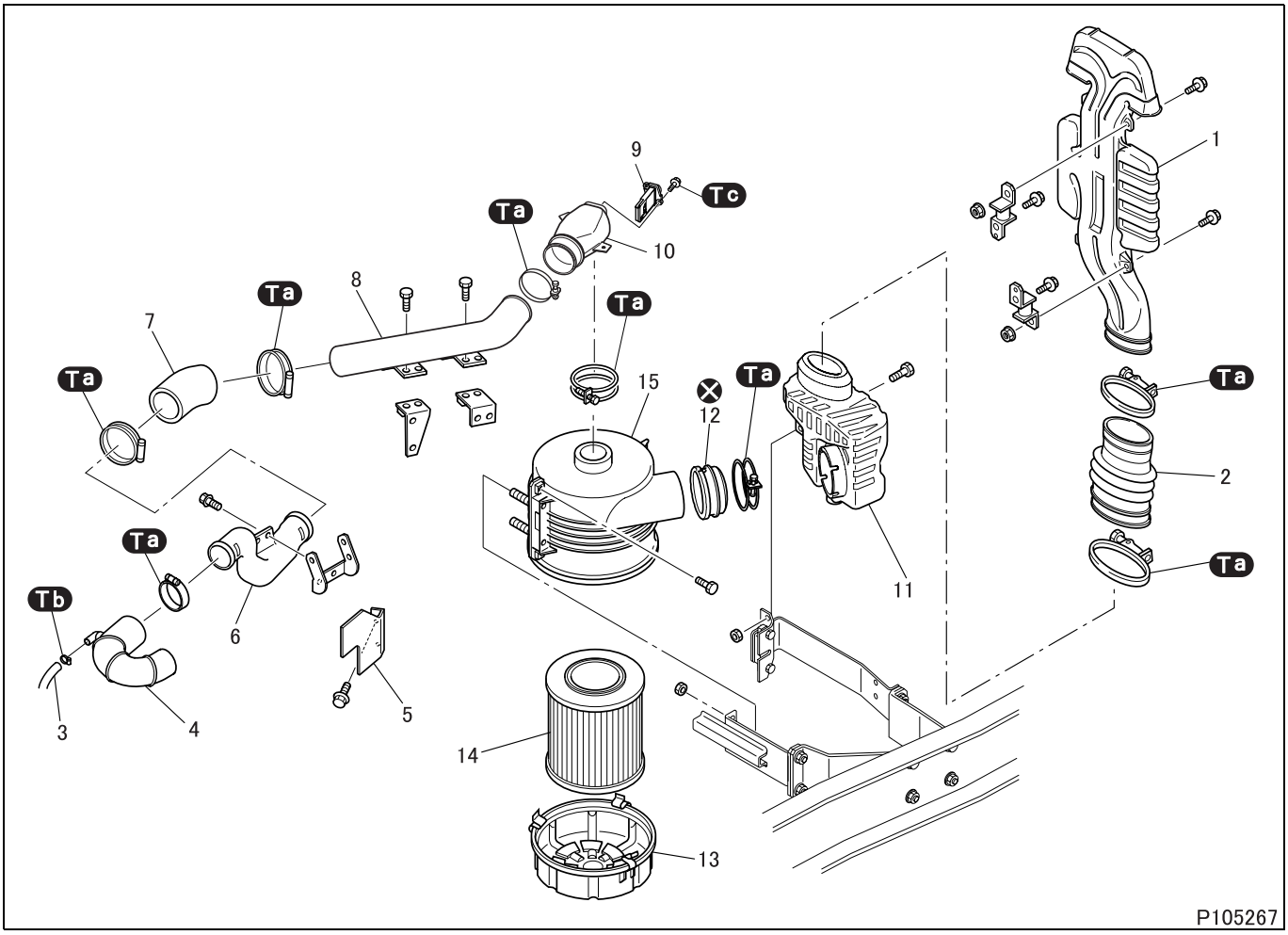

● **Disassembly sequence**

1 Air inlet duct
2 Connector
3 PCV hose
4 Air hose
5 Insulator
6 Air duct
7 Air hose
8 Air pipe
9 Air flow sensor
10 Connector
11 Air box
12 Rubber seal
13 Air cleaner cap
14 Air cleaner element
15 Air cleaner case

⊗: Non-reusable parts
PCV: Positive Crankcase Ventilation

● **Assembly sequence**

Follow the disassembly sequence in reverse.

Tightening torque (Unit: N·m {ft.lbs, kgf·m})

Mark	Parts to be tightened	Tightening torque	Remarks
Ta	Clamp	3.0 to 3.4 {2.2 to 2.5, 0.3 to 0.35}	–
Tb	Clamp	9.0 to 11 {6.6 to 8.1, 0.9 to 1.1}	–
Tc	Bolt (air flow sensor mounting)	1.2 to 1.8 {0.9 to 1.3, 0.12 to 0.18}	–

Special tools

Mark	Tool name and shape	Part No.	Application
a	Pincer 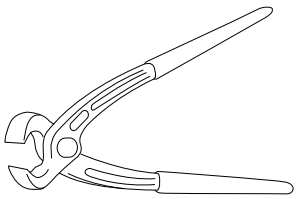 P103715	MH063865	Removal of hose clamp
b	Clamp installation tool 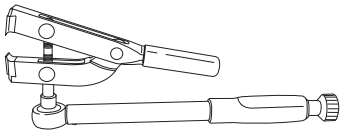 P103716	MH063866	Installation of hose clamp

◆Removal procedure◆

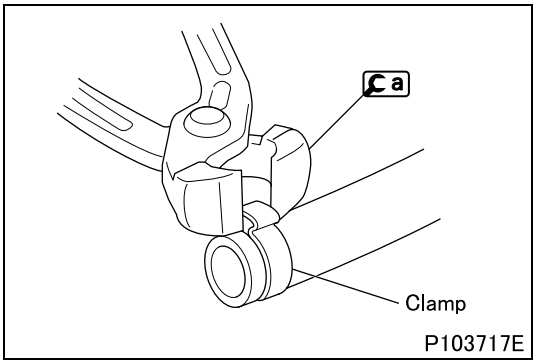

P103717E

■ **Removal: Clamp**

- To remove the clamp, cut the clamp using a.

◆Cleaning procedure◆

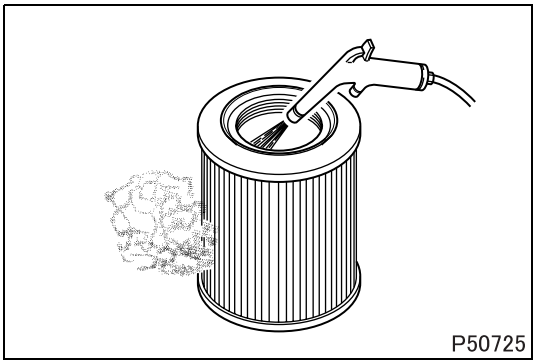
P50725

■ **Cleaning: Filter element**

- Blow a jet of compressed air at a pressure not higher than 685 kPa {100 psi, 7 kgf/cm^2} against the inside surfaces of the element.
- Move the compressed air jet up and down along all pleats of the filter paper element.

CAUTION ⚠

- **For the cleaning interval of the element, refer to the Owner's Handbook. Unnecessarily frequent cleaning may damage the element and can be the cause of dust and foreign objects being trapped in the engine.**
- **Do not strike the element or hit it against another object to remove dust.**
- **Do not blow compressed air against outside surfaces of the element.**

◆Inspection procedure◆

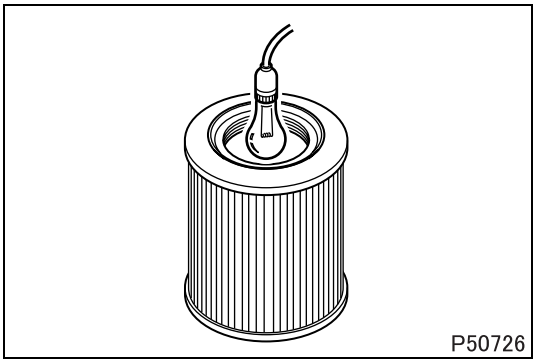

■ **Inspection: Element**

- Shine some electric light inside the element.
- Replace the element if thin spots or broken parts are evident in the filter paper, or if the packing at the top of the element is damaged.
  Also replace the element if the dust on the element is damp with oily smoke or soot, regardless of the replacement schedule.

◆Installation procedure◆

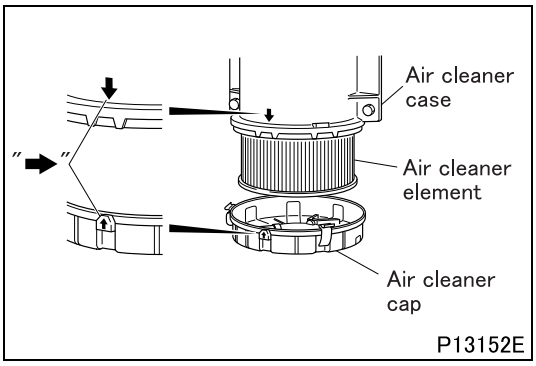

■ **Installation: Air cleaner cap**

➡ : Alignment mark

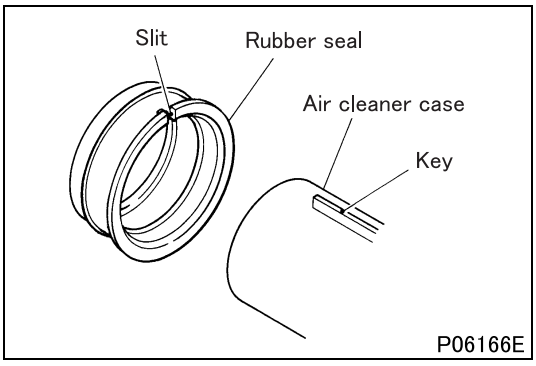

■ **Installation: Rubber seal**

- Align slit of rubber seal with key of air cleaner case.

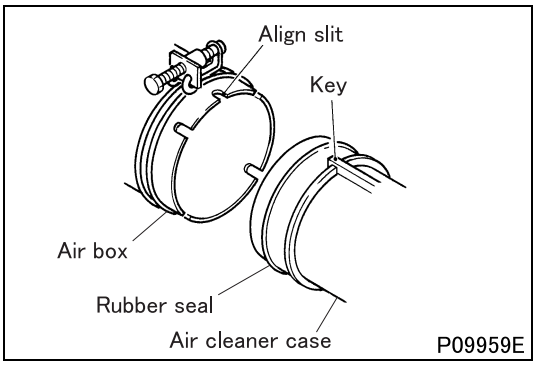

■ **Installation: Air box**

- Align slit of air box with key of air cleaner case.

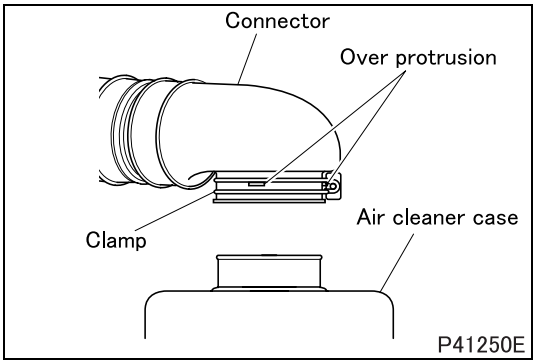

■ **Installation: Connector**

- Fit clamp over protrusions of connector.
- Push air duct in until it hits air cleaner case.

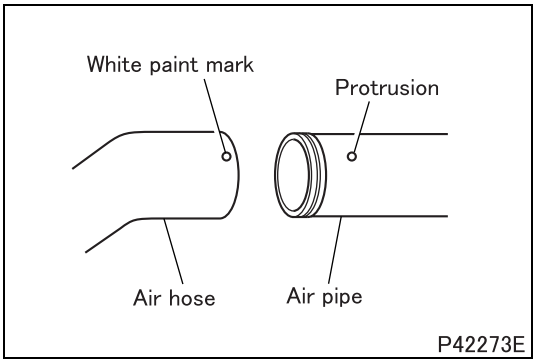

■ **Installation of connector**

- Align paint mark on connector with protrusion on air pipe, and push in the Air hose.

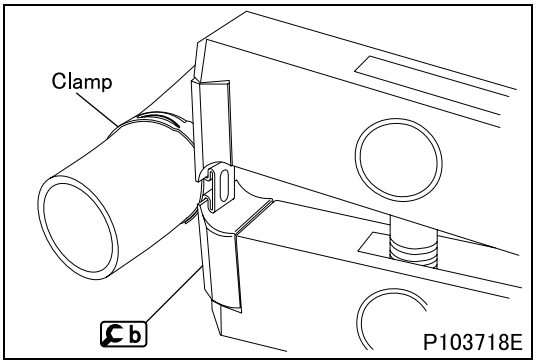

■ **Installation: Clamp**

- Pinch the projecting part of the clamp with b and tighten to the specified torque.

TURBOCHARGER

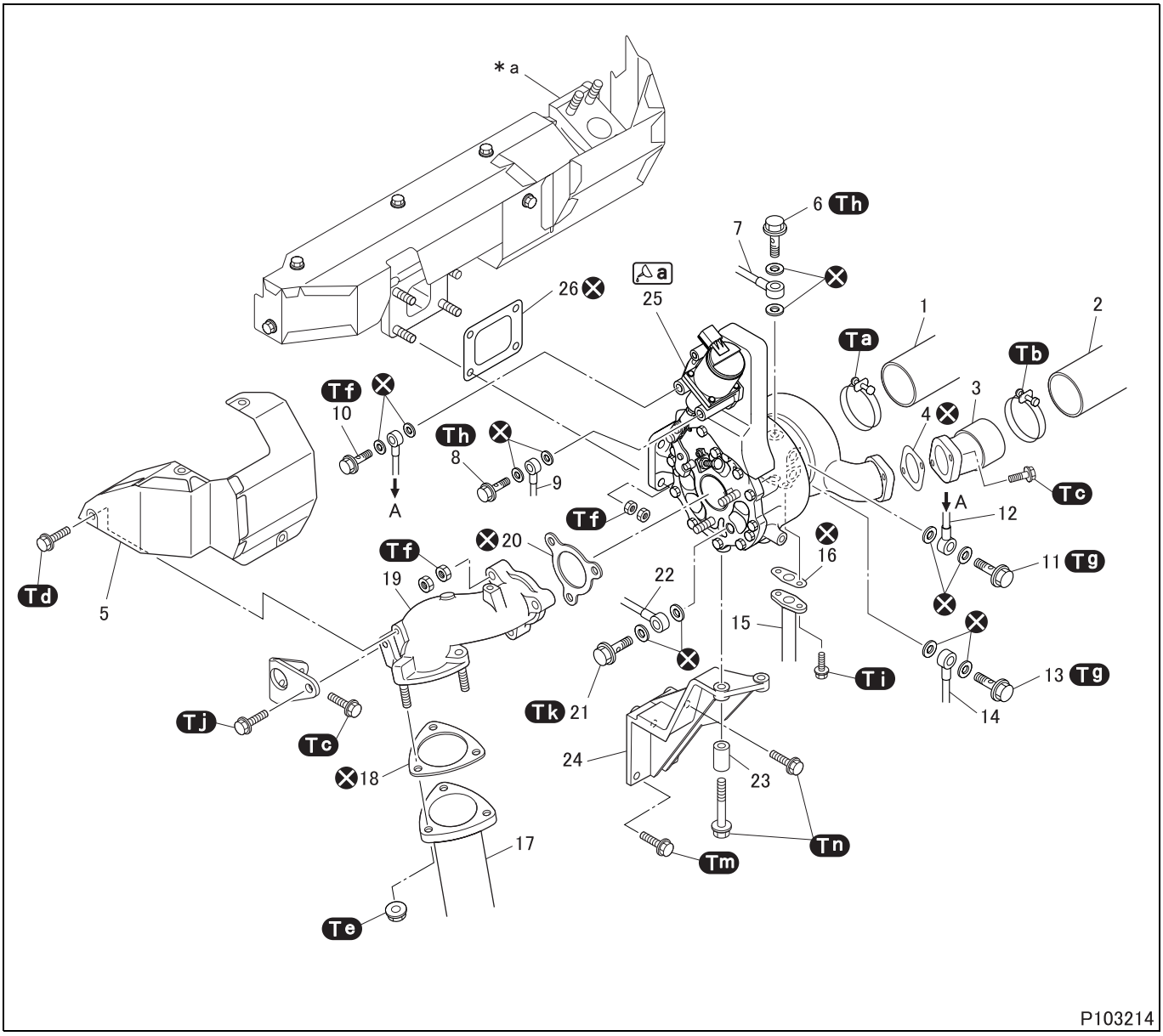

● **Removal sequence**

1 Air duct
2 Air inlet hose
3 Turbocharger coupler
4 Gasket
5 Insulator
6 Eyebolt
7 Oil pipe
8 Eyebolt
9 Water pipe
10 Eyebolt
11 Eyebolt
12 Water pipe
13 Eyebolt
14 Water pipe
15 Oil return pipe
16 Gasket
17 Front pipe
18 Gasket
19 Exhaust coupler
20 Gasket
21 Eyebolt
22 Air pipe
23 Spacer
24 Bracket
25 Turbocharger (See later section.)
26 Gasket

***a**: Exhaust manifold
⊗: Non-reusable parts

● Installation sequence

Follow the removal sequence in reverse.

Tightening torque (Unit: N·m {ft.lbs, kgf·m})

Mark	Parts to be tightened	Tightening torque	Remarks
Ta	Clamp	3 to 3.4 {2.2 to 2.5, 0.3 to 0.35}	–
Tb	Clamp	3.9 to 4.9 {2.9 to 3.6, 0.4 to 0.5}	–
Tc	Bolt (turbocharger coupler mounting)	24 {18, 2.4}	–
	Bolt (exhaust coupler stay mounting)		
Td	Bolt (insulator mounting)	20 {15, 2.0}	–
Te	Nut (front pipe mounting)	45 to 60 {33 to 44, 4.6 to 6.1}	–
Tf	Nut (exhaust coupler mounting)	50 {37, 5.1}	–
	Nut (turbocharger mounting)		
Tg	Eyebolt (water pipe mounting)	26 {19, 2.7}	–
Th	Eyebolt (water pipe mounting)	21 {15, 2.1}	–
	Eyebolt (oil pipe mounting)		
Ti	Bolt (oil pipe mounting)	5 {3.7, 0.5}	–
Tj	Bolt (exhaust coupler stay mounting)	42 {31, 4.3}	–
Tk	Eyebolt (air pipe mounting)	39 {29, 4.0}	–
Tm	Bolt (bracket mounting)	64 {47, 6.5}	–
Tn	Bolt (turbocharger mounting)	33 {24, 3.4}	–
	Bolt (bracket mounting)		

Lubricant and/or sealant

Mark	Points of application	Specified lubricant and/or sealant	Quantity
a	Pouring into turbocharger	Engine oil	As required

Special tools

Mark	Tool name and shape	Part No.	Application
a	Jack 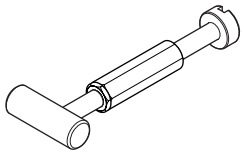 P106941	MH063952	Displacement of engine

◆Work before removal◆

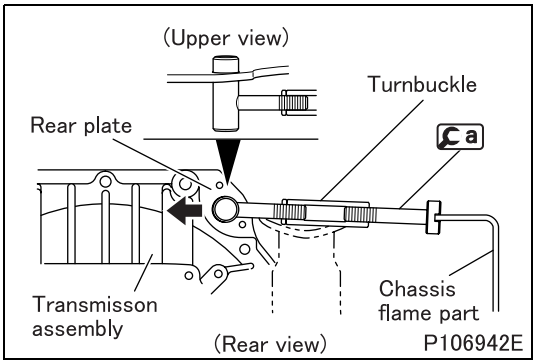

■ Preparing for engine removal: Installation of jack

- This work should be performed only if there isn't sufficient space around the turbocharger for removal and installation of it.
- Fit a between the chassis frame and the rear plate of the engine.
- Turn the turnbuckle of a with a wrench and shift the engine leftward by approximately 5 to 15 mm to make the space sufficient for removing and installing the turbocharger.

◆Installation procedure◆

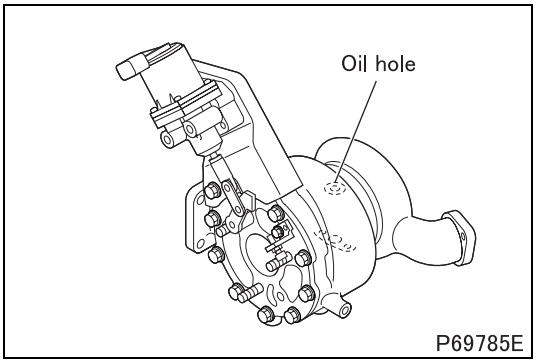

■ **Installation: Turbocharger**

- Before installing the turbocharger assembly, pour engine oil into the oil hole to ensure smooth operation of the internal parts.

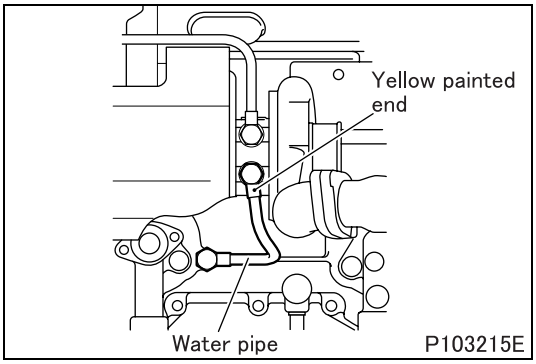

■ **Installation: Water pipe**

- Install the water pipe with its yellow painted end toward the turbocharger.

M E M O

Turbocharger

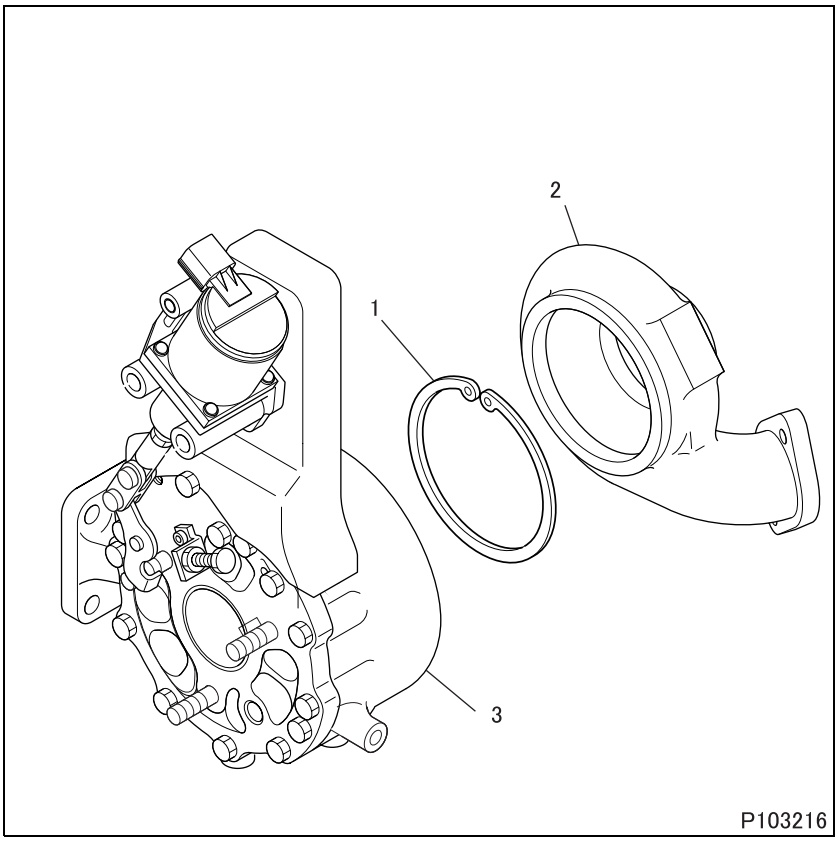

● **Removal sequence**

1 Snap ring
2 Compressor cover
3 Turbine assembly

- Do not attempt to disassemble the turbine assembly because it is of a unit construction.
- Do not unseal and try to adjust the turbine assembly. It should be replaced as an assembly if any failure is found.

CAUTION ⚠

- **The blades on the turbine assembly are easily bent. Make sure that they do not strike the compressor cover.**

● **Installation sequence**

Follow the removal sequence in reverse.

◆Work after disassembly◆

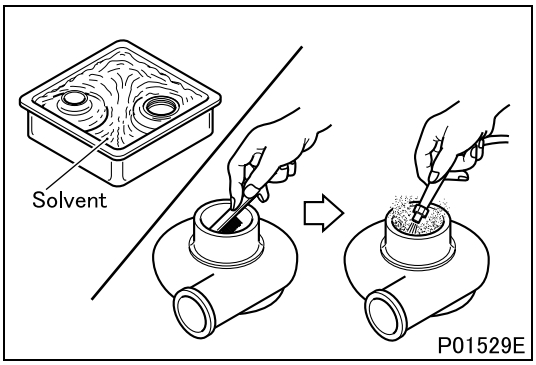

■ **Cleaning**

- Before cleaning, visually check the disassembled parts for scorches, abrasion and other marks that may be difficult to see after cleaning. Replace any part that appears defective.
- Immerse the disassembled parts in a non-flammable solvent (a 5 to 10 aqueous solution of Oil Clean from New Hope Co., Ltd.). Take out the parts and blow them dry with compressed air. Remove any hard deposits with a stiff brush or plastic scraper.

CAUTION ⚠

- **Do not immerse the cartridge assembly in the solvent. Doing so will cause the O-ring inside the cartridge assembly to sell up, which may adversely affect turbocharger operation.**

- Again, immerse the parts in the solvent.
- Blow them dry using compressed air.

◆Inspection procedure◆

■ **Inspection: Visual inspection of turbine assembly**

CAUTION ⚠

- **The turbine assembly is a non-disassemble component. When it becomes unsmooth in rotation or has a damaged compressor wheel, replace the turbocharger.**

M E M O

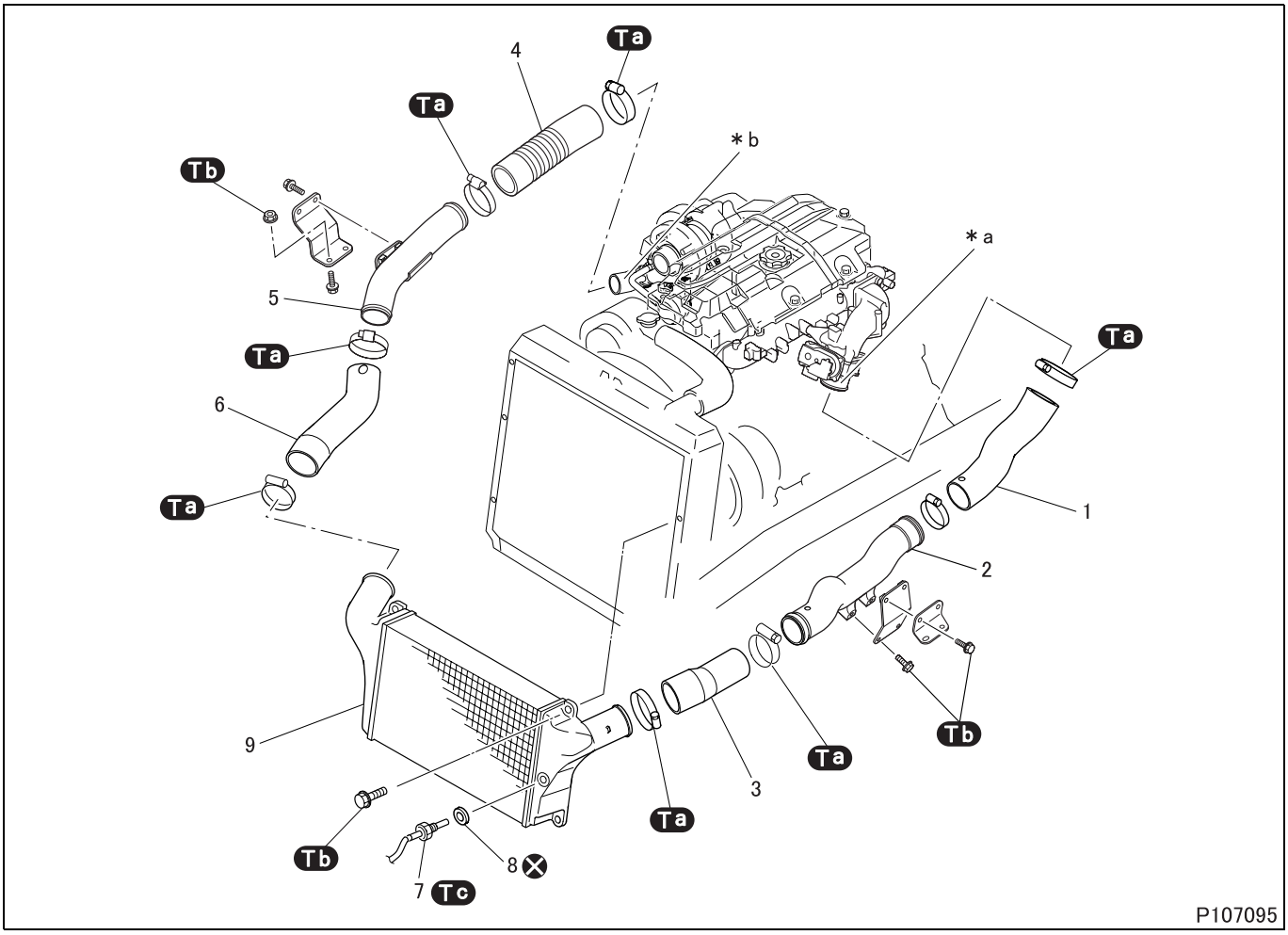

●Disassembly sequence

1 Air inlet hose
2 Air inlet pipe LH
3 Air inlet hose
4 Air inlet hose
5 Air inlet pipe RH
6 Air inlet hose
7 Intake air temperature sensor
8 Gasket
9 Intercooler

***a**: Intake throttle
***b**: Turbocharger coupler

CAUTION ⚠

- **Do not remove forcedly the air inlet hose using a screwdriver or other similar tool. Doing so could damage the fluorine treatment layer on the inside surface of the hose, deteriorating the resistance to oil of the hose.**

●Assembly sequence

Follow the disassembly sequence in reverse.

Service standards

Location	Maintenance item	Standard value	Limit	Remedy
8	Intercooler air leakage (air pressure: 200 kPa {29 psi, 2.0 kgf/cm^2} maintained for 30 seconds)	0 cm^3 {0 cu.in.}	–	Replace

Tightening torque (Unit: N·m {ft.lbs, kgf·m})

Mark	Parts to be tightened	Tightening torque	Remarks
Ta	Clamp	3.9 to 4.9 {2.9 to 3.6, 0.4 to 0.5}	–
Tb	Bolt (bracket mounting)	12 to 15 {8.9 to 11, 1.2 to 1.5}	–
	Nut (bracket mounting)		
	Bolt (intercooler mounting)		
Tc	Intake air temperature sensor	14.7 to 24.5 {11 to 18, 1.5 to 2.5}	–

◆Inspection procedure◆

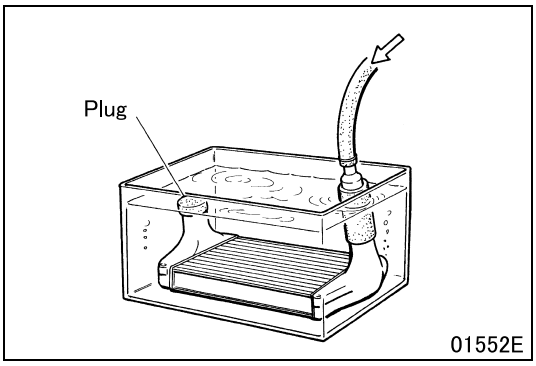

■ **Inspection: Intercooler**

- Plug one of the air ports on the intercooler and connect an air source to the other port. Place the intercooler in a tank of water and apply air pressure of the specified level (200 kPa {29 psi, 2.0 kgf/cm^2}) to the intercooler and retain the pressure for 30 seconds.
- Replace the intercooler if any air leakage is evident.

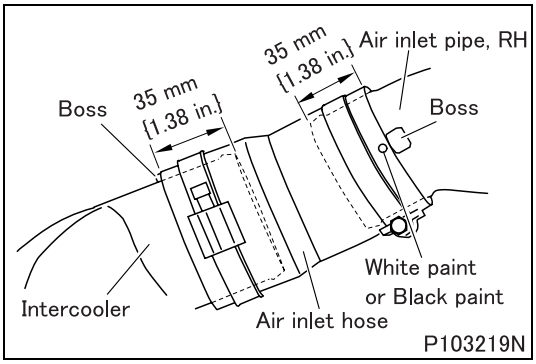

■ **Installation: Air inlet hose**

- Connect the air inlet hose to the RH air inlet pipe with the white paint on the hose aligned with the boss on the pipe.
- Connect the air inlet hoses to the intercooler, RH air inlet pipe and turbocharger coupler to the dimensions indicated in the illustrations.

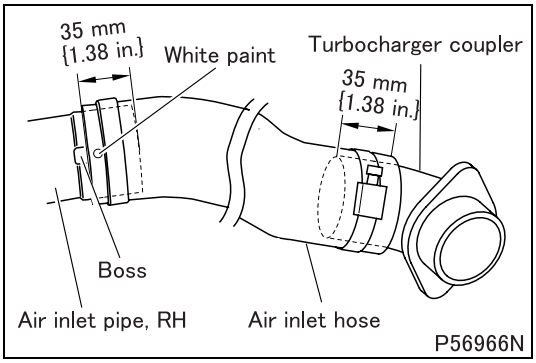

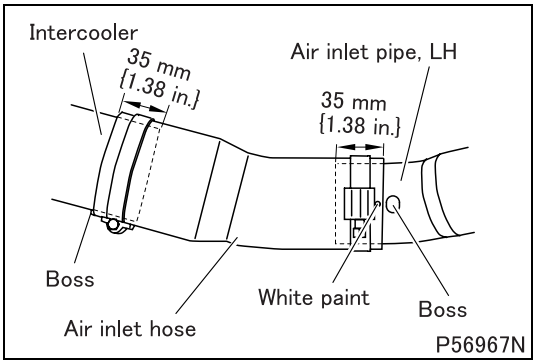

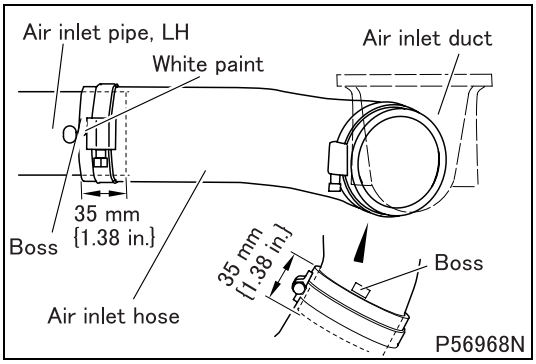

- Connect the air inlet hose to the LH air inlet pipe with the white paint on the hose aligned with the boss on the pipe.
- Connect the air inlet hoses to the intercooler, LH air inlet pipe and air inlet duct to the dimensions indicated in the illustrations.

M E M O

INTAKE MANIFOLD

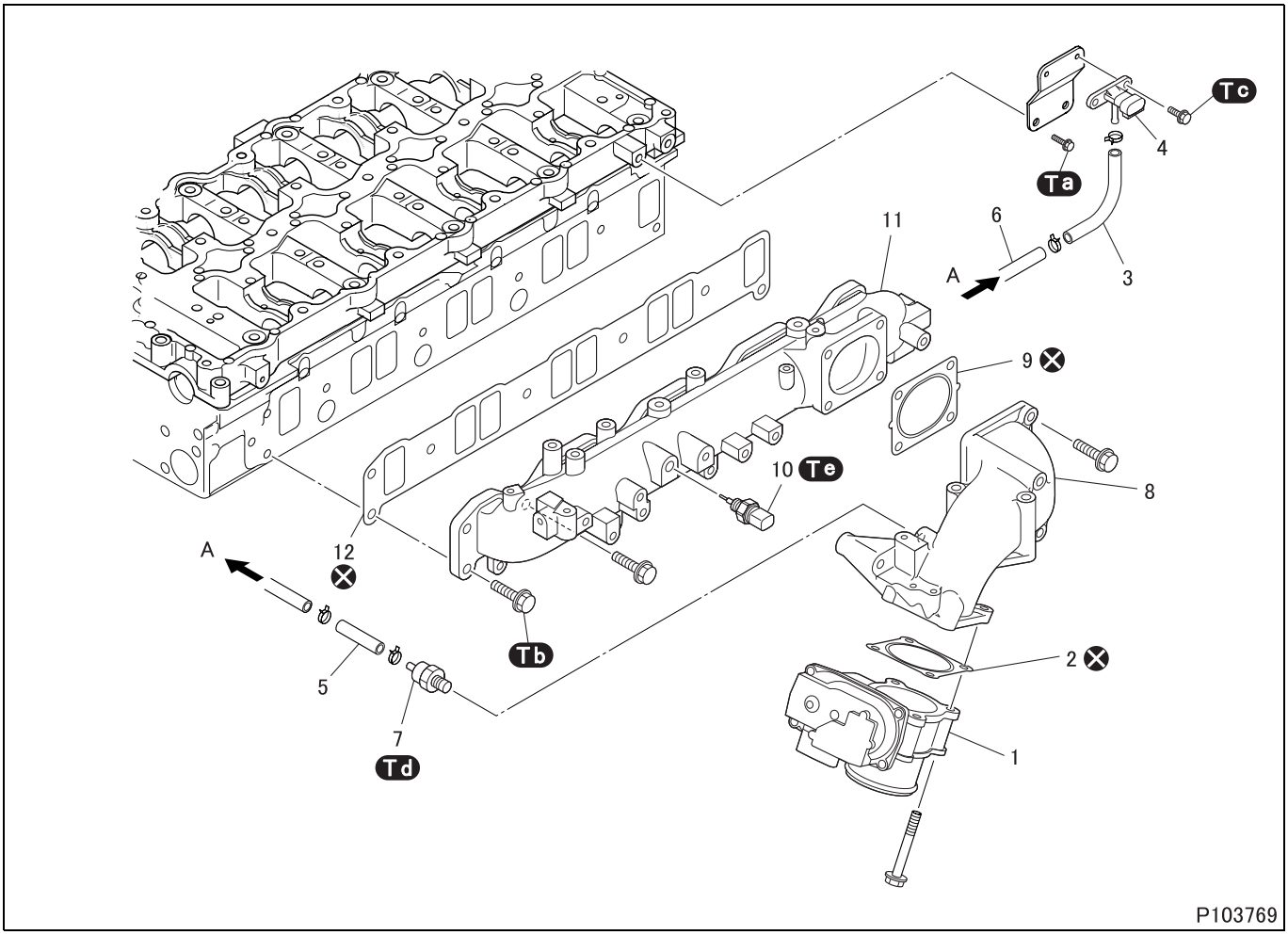

● **Disassembly sequence**

1 Intake throttle
2 Gasket
3 Vacuum hose
4 Boost pressure sensor
5 Vacuum hose
6 Vacuum pipe
7 Gas filter
8 Air inlet pipe
9 Gasket
10 Boost air temperature sensor
11 Intake manifold
12 Gasket

⊗: Non-reusable parts

● **Assembly sequence**

Follow the disassembly sequence in reverse.

Tightening torque (Unit: N·m {ft.lbs, kgf·m})

Mark	Parts to be tightened	Tightening torque	Remarks
Ta	Bolt (boost pressure sensor bracket mounting)	24 {18, 2.4}	–
Tb	Bolt (intake manifold mounting)	46 {34, 4.7}	–
Tc	Bolt (boost pressure sensor mounting)	5.5 {4.1, 0.6}	–
Td	Gas filter	14.7 to 19.6 {11 to 14, 1.5 to 2.0}	–
Te	Boost air temperature sensor	25 {18, 2.5}	–

◆Installation procedure◆

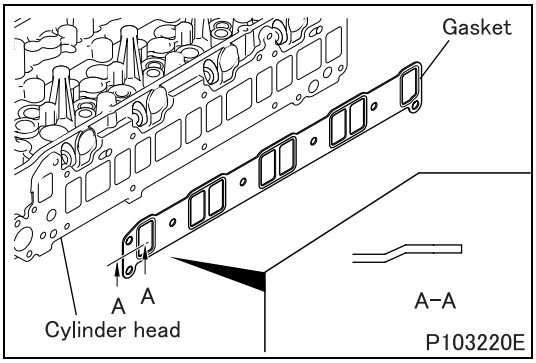

■ **Installation: Gasket**

- Install the gasket on the cylinder head in the illustrated direction.

◆Inspection procedure◆

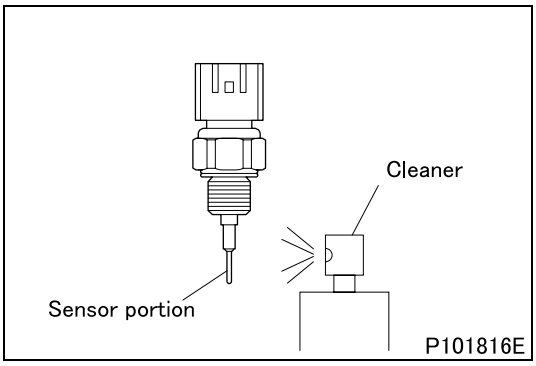

■ **Inspection: Boost air temperature sensor**

- Check that the sensor portion is free of soot, oily substance, etc.
- If not, clean the sensor portion as follows.
- Spray a cleaner on the sensor portion from 2 or 3 cm {0.79 or 1.18 in.} away.
  Recommended cleaners:
  Nonchlorinated solvent
- In 20 to 30 seconds after spraying, wipe the sensor portion clear of the sprayed cleaner using a soft waste cloth the like.

CAUTION ⚠

- **Be sure to wait for 20 to 30 seconds before wiping. It takes the cleaner that long to dissolve foreign matter.**

If the sensor portion is fouled excessively, the positive crankcase ventilation (PCV) may be faulty. Inspect the PCV valve and filter to locate the cause and remove it.

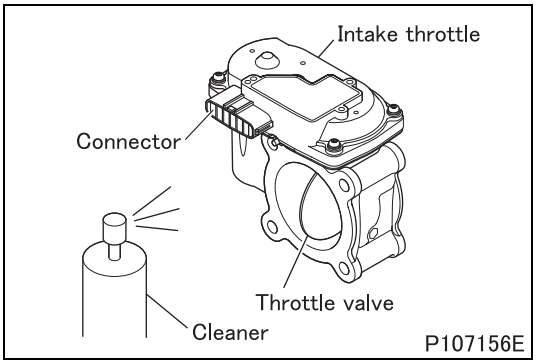

■ **Inspection: Intake throttle**

- Check that the throttle valve is free of soot, oily substance, etc.
- If not, clean the throttle valve as follows.
- Spray a cleaner on the throttle valve from 2 or 3 cm {0.79 or 1.18 in.} away.
  Recommended cleaners:
  Nonchlorinated solvent
- In 20 to 30 seconds after spraying, wipe the throttle valve clear of the sprayed cleaner using a soft waste cloth the like.

CAUTION ⚠

- **Be sure to wait for 20 to 30 seconds before wiping. It takes the cleaner that long to dissolve foreign matter.**
- **Do not spray a cleaner on the intake throttle connector directly. If it is sprayed on the connector, immediately wipe it off.**

EXHAUST MANIFOLD

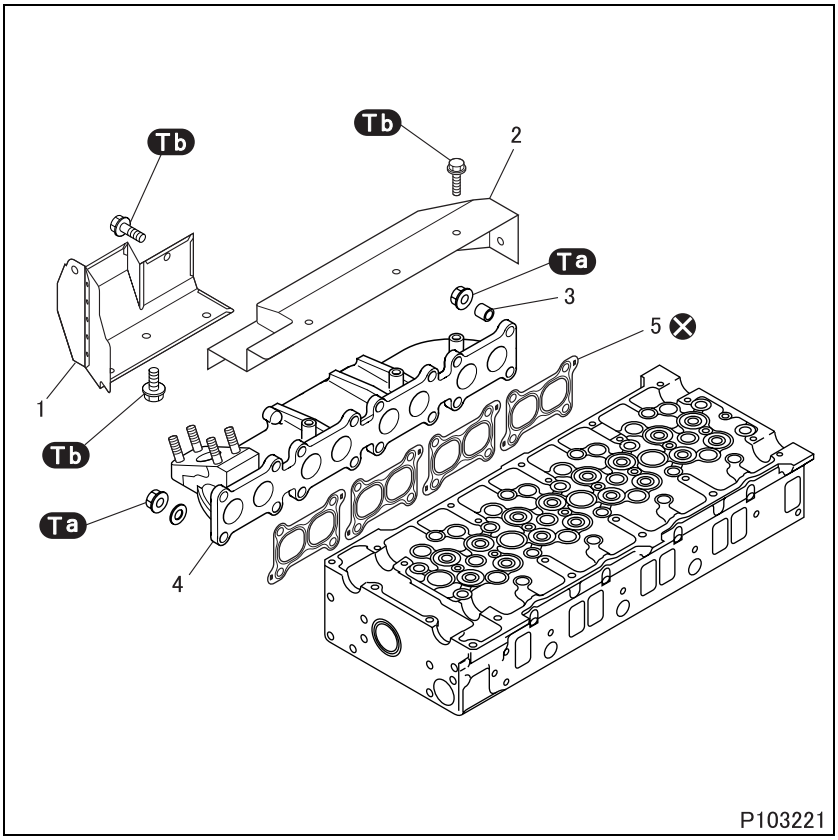

● Disassembly sequence

1 Exhaust manifold insulator
2 Exhaust manifold insulator
3 Distance piece
4 Exhaust manifold
5 Gasket

⊗: Non-reusable parts

● Assembly sequence

Follow the disassembly sequence in reverse.

Tightening torque (Unit: N·m {ft.lbs, kgf·m})

Mark	Parts to be tightened	Tightening torque	Remarks
Ta	Nut (exhaust manifold mounting)	42 {31, 4.3}	–
Tb	Bolt (exhaust manifold insulator mounting)	20 {15, 2.0}	–

◆Installation procedure◆

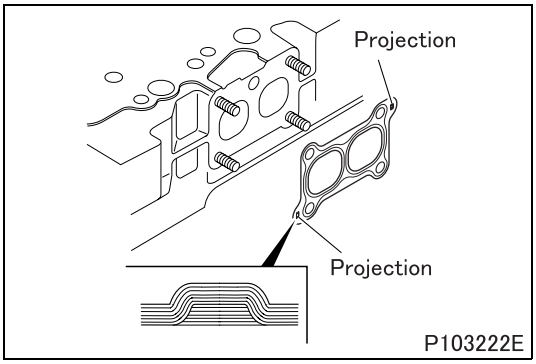

■ Installation: Gasket

- Install the gasket on the cylinder head with their surfaces facing in the illustrated directions.

M E M O

EXHAUST PIPE

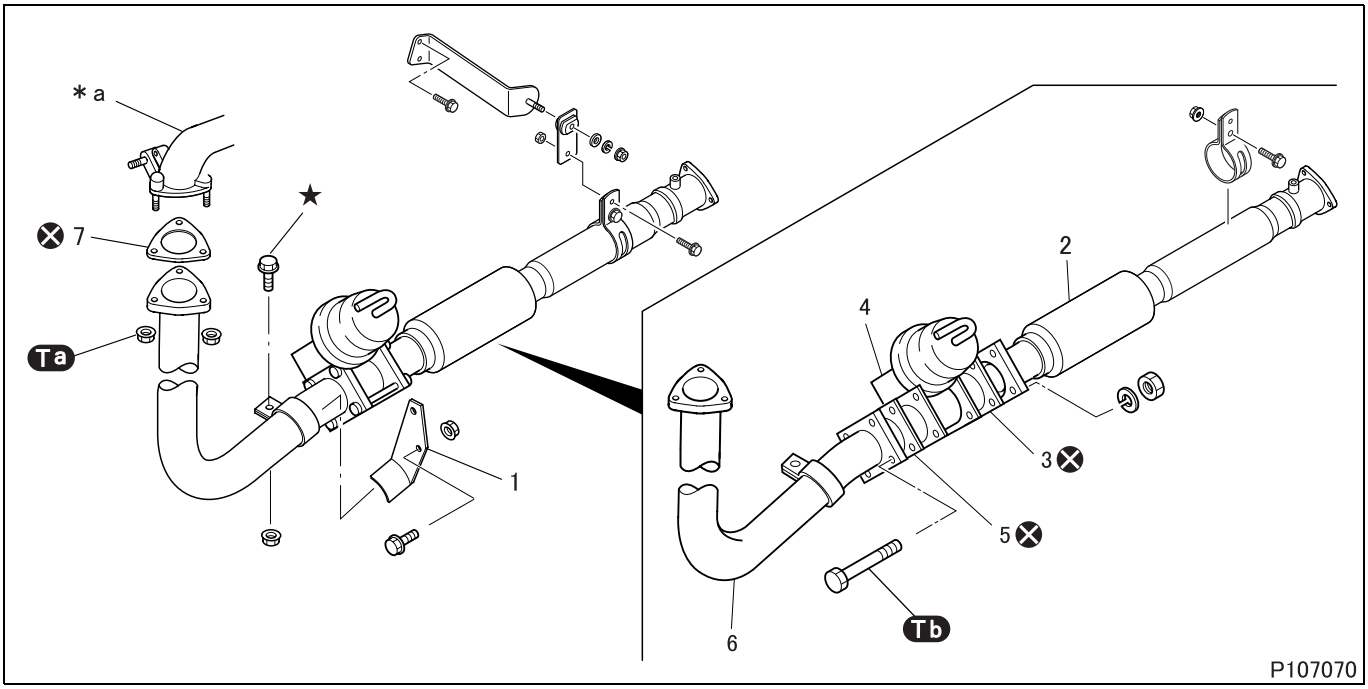

● **Disassembly sequence**

1 Brace bracket
2 Front pipe
3 Gasket
4 Exhaust brake unit (See Gr35A.)
5 Gasket
6 Front pipe
7 Gasket

***a**: Exhaust coupler
⊗: Non-reusable parts

CAUTION ⚠

- **Loosen the ★ marked bolt first to prevent undue forces from being applied to the exhaust pipe.**

● **Assembly sequence**

Follow the disassembly sequence in reverse.

CAUTION ⚠

- **Tighten the ★ marked bolt last to prevent undue forces from being applied to the exhaust pipe.**

Tightening torque (Unit: N·m {ft.lbs, kgf·m})

Mark	Parts to be tightened	Tightening torque	Remarks
Ta	Nut (front pipe mounting)	45 to 60 {33 to 44, 4.6 to 6.1}	–
	Bolt (front pipe mounting)		
Tb	Bolt (exhaust brake unit mounting)	25 to 28 {18 to 21, 2.5 to 2.9}	–

◆Installation procedure◆

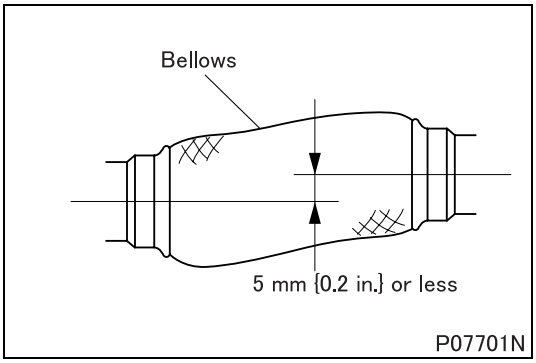

■ **Installation: Front pipe**

- Install the front pipe so that the amounts of offset in both vertical and horizontal directions between the pipes in front of and behind the bellows are smaller than the dimension indicated in the illustration.

CAUTION ⚠

- **The bellows on the front pipe have the purpose of reducing the level of noise from the vehicle. It is not intended for compensating for misalignment that may result from improper installation of the front pipe. Install the front pipe properly to avoid excessive tension or other stress on the bellows.**

DIESEL PARTICULATE FILTER

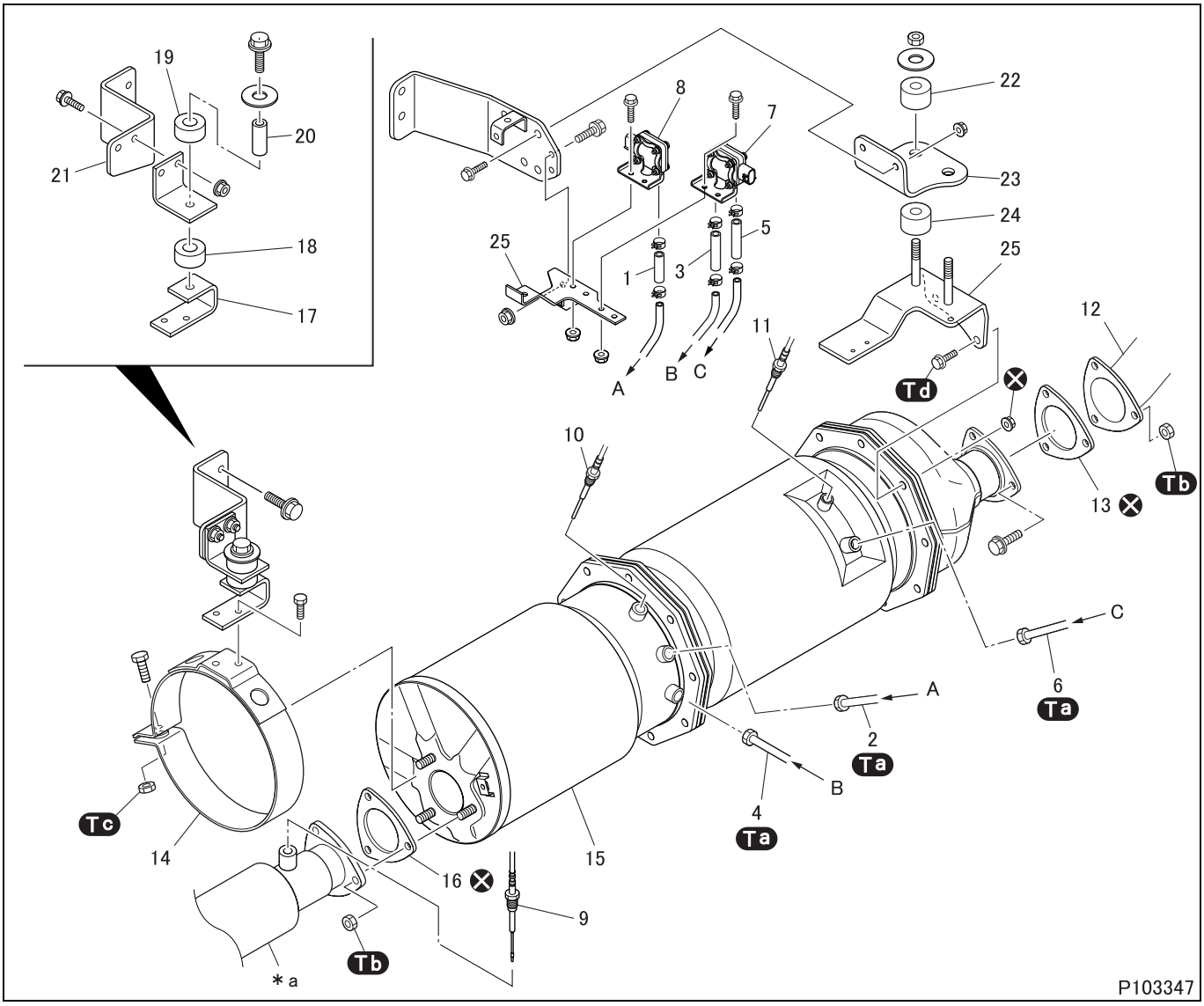

● **Removal sequence**

1 Pressure hose
2 Pressure pipe
3 Pressure hose
4 Pressure pipe
5 Pressure hose
6 Pressure pipe
7 DPF pressure sensor (DIFF)
8 DPF absolute pressure sensor
9 Catalytic temperature sensor
10 DPF temperature sensor 1
11 DPF temperature sensor 2
12 Tail pipe
13 Gasket
14 DPF band
15 DPF (See later section.)
16 Gasket
17 Stay
18 Cushion rubber
19 Cushion rubber
20 Collar
21 Bracket
22 Cushion rubber
23 Bracket
24 Cushion rubber
25 Bracket

***a**: Front pipe
⊗: Non-reusable parts
DPF: Diesel particulate filter

● **Installation sequence**

Follow the removal sequence in reverse.

Tightening torque (Unit: N·m {ft.lbs, kgf·m})

Mark	Parts to be tightened	Tightening torque	Remarks
Ta	Pressure pipe	40 {30, 4.0}	–
Tb	Nut (front pipe mounting)	26 to 33 {2.0 to 24, 2.7 to 3.4}	–
	Nut (tail pipe mounting)		
Tc	Nut (diesel particulate filter band mounting)	45 to 60 {33 to 44, 4.6 to 6.1}	–
Td	Bolt (bracket mounting)	49 to 63.7 {36 to 47, 5.0 to 6.4}	–

◆Inspection procedure◆

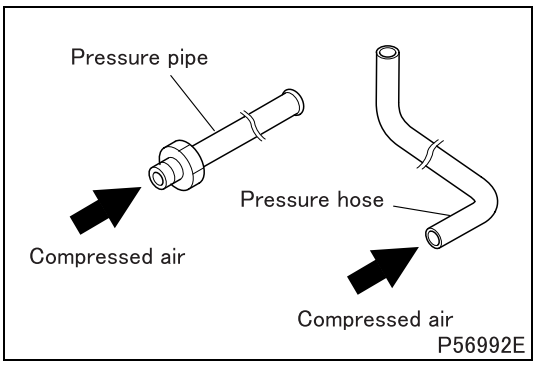

■ Inspection: Pressure pipe and hose

- Check the pressure pipe and hose for clogging by blowing compressed air into the pipe and hose.

CAUTION ⚠

- **Inspection must be performed on an individual pressure pipe or hose.**
- **If compressed air is blown into the pressure pipe or hose with diesel particulate filter pressure sensor still installed, the sensor may become damaged.**

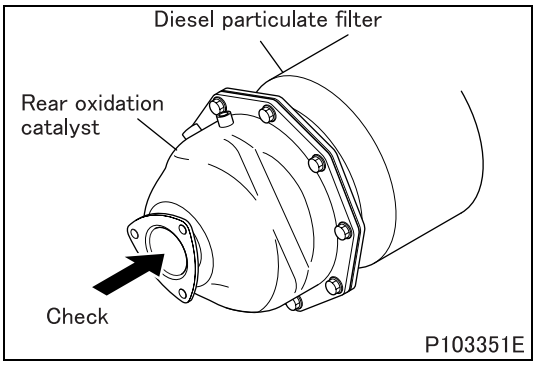

■ Inspection: Diesel particulate filter

- Check the inside of the rear oxidation catalyst and the diesel particulate filter for adhesion of soot.
- If a large amount of soot is adhered, replace the ceramic filter as it may be damaged.

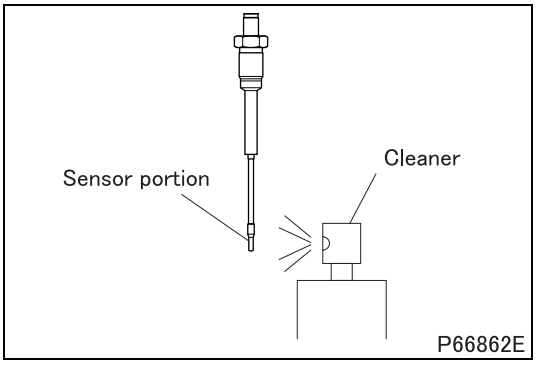

■ Inspection: Temperature sensor

- Check that the sensor portion is free of soot, oily substance, etc.
- If not, clean the sensor portion as follows.
- Spray a cleaner on the sensor portion from 2 or 3 cm {0.79 or 1.18 in.} away.
  Recommended cleaners:
  Nonchlorinated solvent
- In 20 to 30 seconds after spraying, wipe the sensor portion clear of the sprayed cleaner using a soft waste cloth the like.

CAUTION ⚠

- **Be sure to wait for 20 to 30 seconds before wiping. It takes the cleaner that long to dissolve foreign matter.**

◆Installation procedure◆

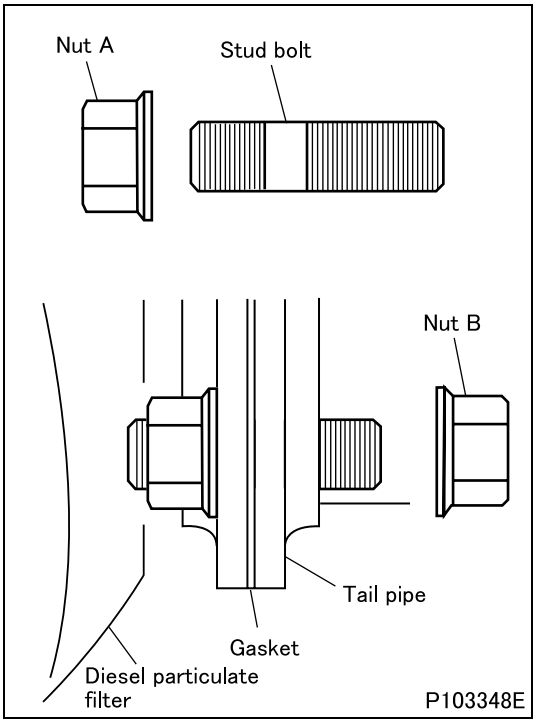

■ Installation: Tail pipe

- Install nut A to the shorter thread end of a stud bolt. Tighten the nut fully.
- From the diesel particulate filter side, insert the assembled stud bolt and nut A into the bolt hole. Fit the gasket and the tail pipe and tighten nut B to the specified torque.

M E M O

DPF

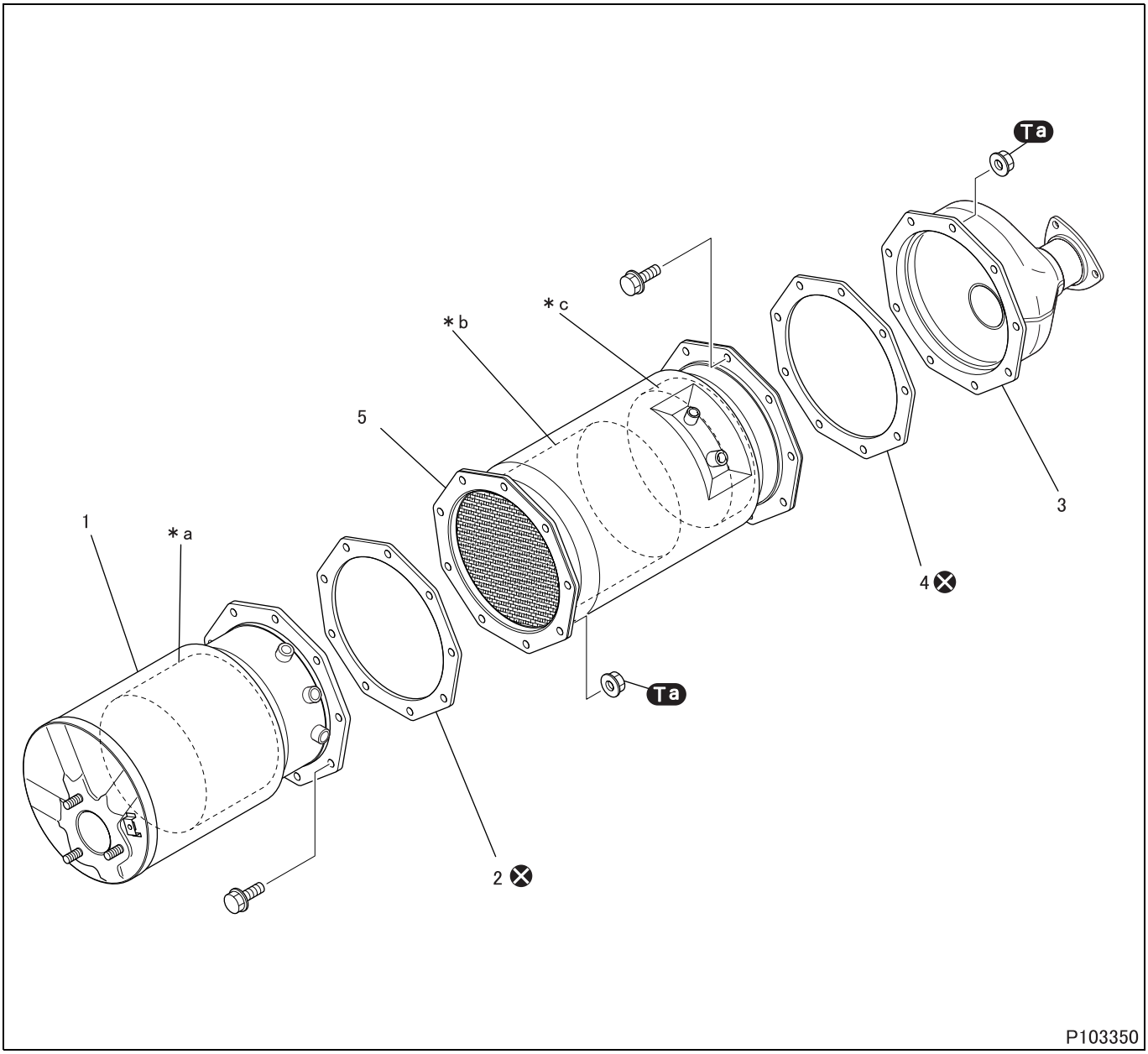

● **Disassembly sequence**

1 Inlet body
2 Gasket
3 Outlet body
4 Gasket
5 Filter body

***a**: Front oxidation catalyst
***b**: Ceramic filter
***c**: Rear oxidation catalyst
⊗: Non-reusable parts

● **Assembly sequence**

Follow the disassembly sequence in reverse.

Tightening torque (Unit: N·m {ft.lbs, kgf·m})

Mark	Parts to be tightened	Tightening torque	Remarks
Ta	Nut (inlet body mounting)	49 to 63.7 {36 to 47, 5.0 to 6.4}	–
	Nut (outlet body mounting)		

◆Inspection procedure◆

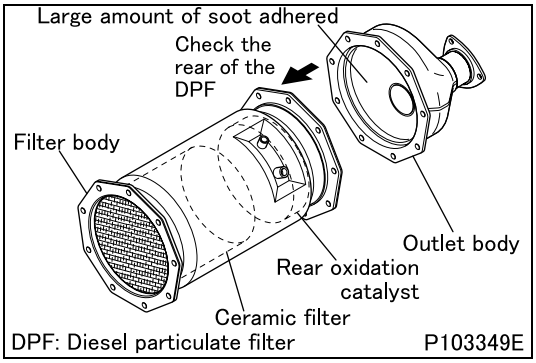

■ Inspection: Inlet body

- Visually inspect the front oxidation catalyst.
- If there is any abnormality or damage, replace the inlet body.

■ Inspection: Outlet body

- Check if a large amount of soot adheres inside the diesel particulate filter outlet body.
- If a large amount of soot adhesion is found, replace the diesel particulate filter.

■ Inspection: Filter body

- Check the rear oxidization catalyst at the rear of the ceramic filter for damage.
- If any abnormality is found, replace the filter body.
- If no abnormality is found but cleaning of the filter is required, clean the ceramic filter. (See “ON-VEHICLE INSPECTION AND ADJUSTMENT”.)

Group 17

Emission Control

Table of Contents

Back

Home

MITSUBISHI FUSO TRUCK OF AMERICA, Inc.

Pub.No.TWSE0805-17

INDEX

STRUCTURE AND OPERATION

1. Exhaust Gas Recirculation System 17-2
2. Crankcase Emission Control System 17-7

EXHAUST GAS RECIRCULATION VALVE, PIPE AND COOLER 17-8

CRANKCASE EMISSION CONTROL SYSTEM 17-12

1. Exhaust Gas Recirculation System

1.1 Overview

- In the exhaust gas recirculation system, the engine electronic control unit and multiple electronic drive units control the exhaust gas recirculation valve and intake throttle in accordance with information from sensors on various aspects of the engine (engine speed, coolant temperature, throttle opening, etc.).
- Exhaust gas recirculation involves the introduction of inert gases in the post-combustion exhaust emissions into the intake manifold. By reducing the combustion temperature, it reduces the amount of nitrogen oxides (NOx), which are harmful, in the exhaust emissions. Further, an exhaust gas recirculation cooler cools the recirculated exhaust emissions, thereby reducing the peak combustion temperature.
- The intake air quantity is adjusted by means of intake throttle control such that the effectiveness of exhaust gas recirculation is maximized.

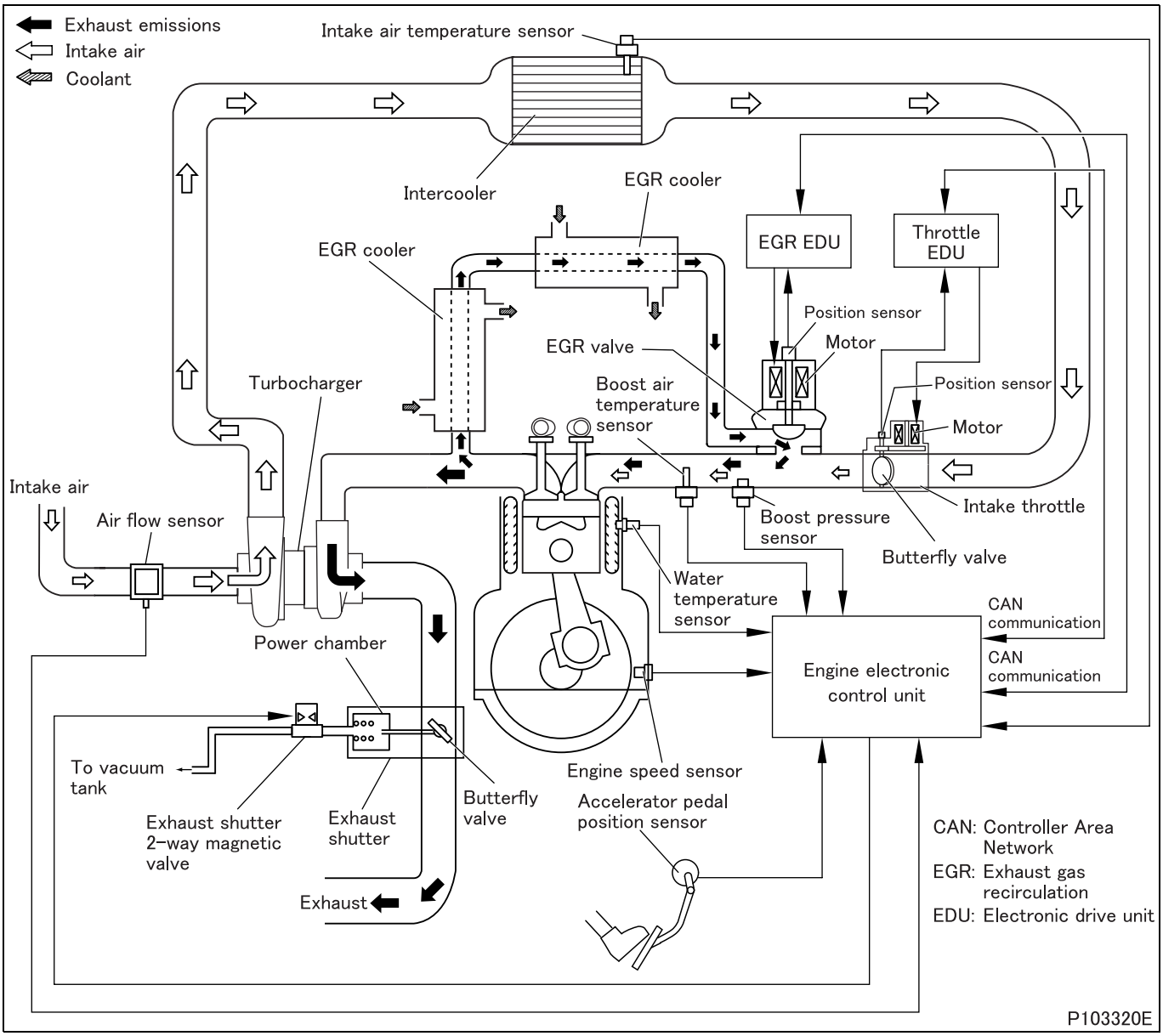

1.2 Electronic control system

(1) System block diagram

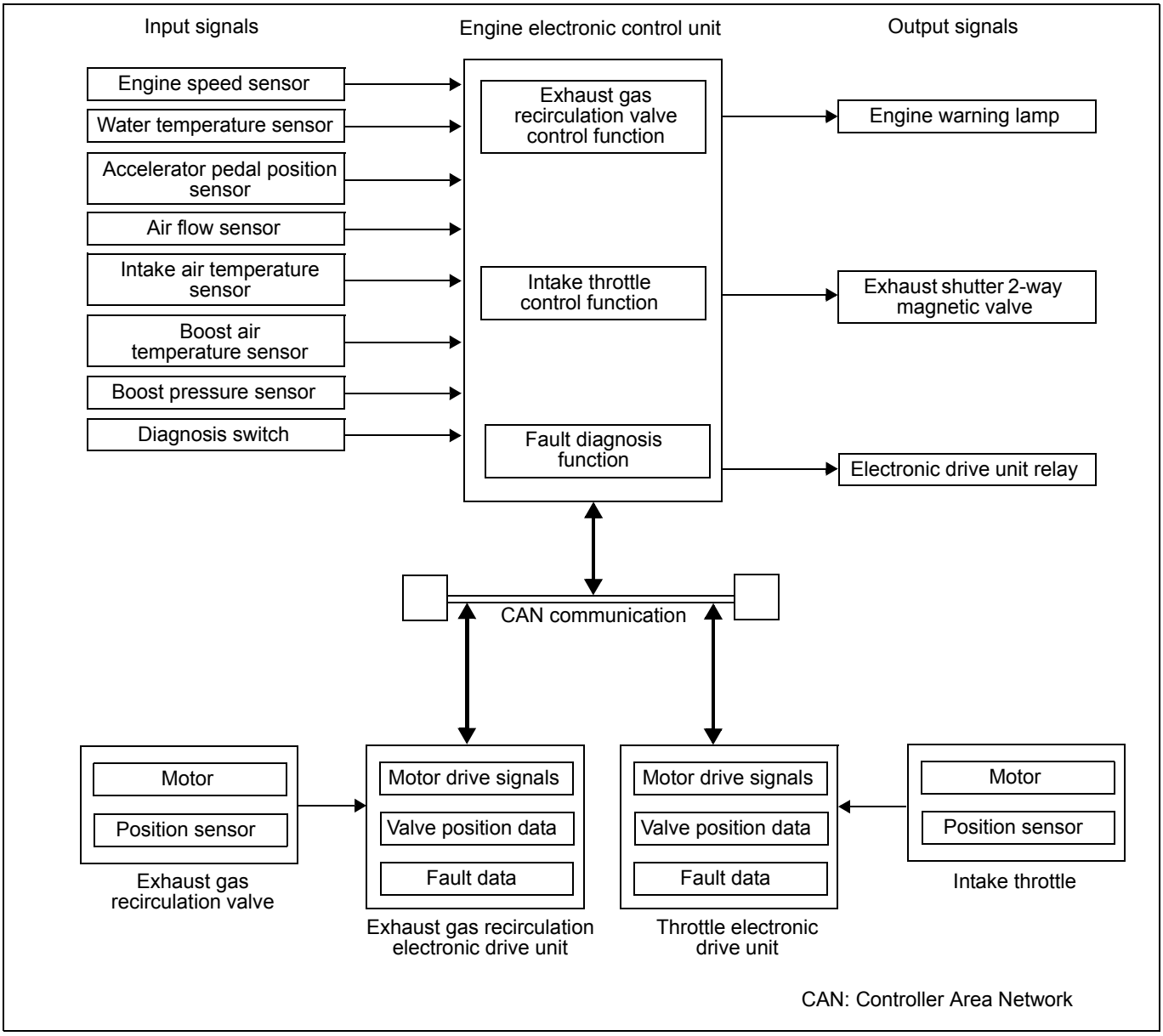

(2) Exhaust gas recirculation valve control function

- In accordance with data from sensors, the engine electronic control unit determines the exhaust gas recirculation valve opening that suits the operating condition and sends a control signal (this indicates the target exhaust gas recirculation valve opening) to the exhaust gas recirculation electronic drive unit.
  When necessary to prevent black smoke emissions and engine speed instability (for example, when the engine is heavily loaded, when the engine is lightly loaded, and when the exhaust brake is operating), the engine electronic control unit stops exhaust gas recirculation valve control.
- The exhaust gas recirculation electronic drive unit activates the exhaust gas recirculation valve motor. At the same time, it monitors the extent of valve lift using a position sensor and sends this information (this indicates the actual exhaust gas recirculation valve opening) to the engine electronic control unit.
  This operation makes it possible for the target exhaust gas recirculation valve opening indicated by the engine electronic control unit to be precisely maintained.

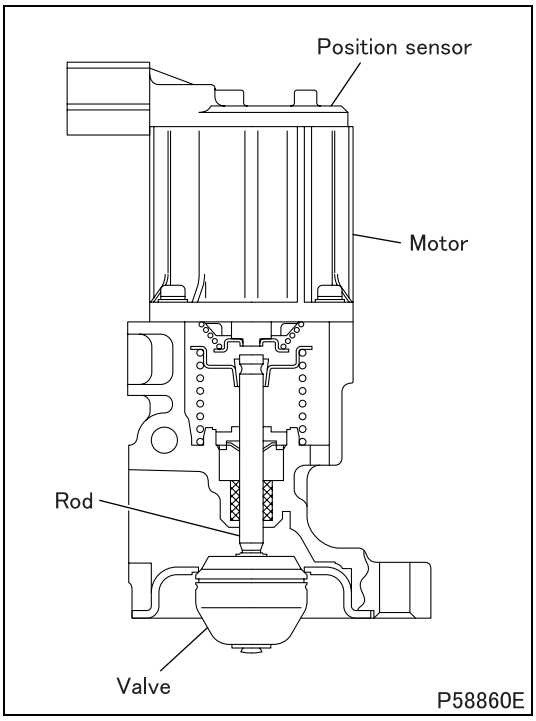

(2.1) Exhaust gas recirculation valve

- A motor in the exhaust gas recirculation valve is driven by control signals from the exhaust gas recirculation electronic drive unit. Via a rod, the motor's operation opens and closes the valve.

(3) Intake throttle control function

- When the engine electronic control unit determines from sensor data on the engine speed and engine loading that the vacuum pressure in the intake manifold is low, it increases the amount of exhaust emissions introduced into the intake manifold by determining an appropriate butterfly valve opening and by sending corresponding control signals (these indicate the target throttle opening) to the throttle electronic drive unit.
- The throttle electronic drive unit activates the valve motor. At the same time, it monitors the valve opening using a position sensor and sends this information (this indicates the actual throttle opening) to the engine electronic control unit.
  This operation makes it possible for the target throttle opening indicated by the engine electronic control unit to be precisely maintained.

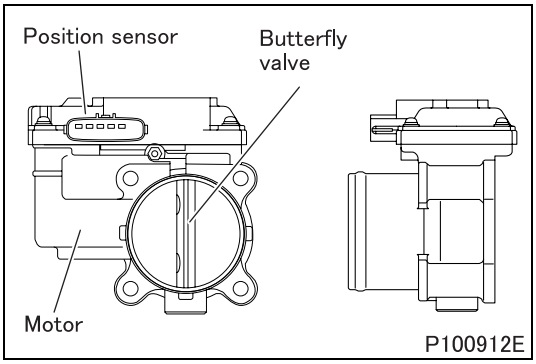

(3.1) Intake throttle

- In accordance with signals from the throttle electronic drive unit, the motor opens and closes the butterfly valve, thereby adjusting the intake air amount such that the effectiveness of exhaust gas recirculation is maximized.

(4) Fault diagnosis function

- While the starter switch is in the ON position, the engine electronic control unit continuously monitors the electronic drive units and sensors for faults. In the event that the engine electronic control unit finds a component faulty, it causes an indication to be made in the meter cluster to alert the driver. At the same time, it memorizes the fault location in the form of a diagnosis code and starts a control during fault.
- While the engine is running, the exhaust gas recirculation electronic drive unit and throttle electronic drive unit continuously monitor communication with the position sensor and motor of the exhaust gas recirculation valve, communication with the position sensor and motor of the intake throttle, and communication with the engine electronic control unit. In the event that they identify a fault, they send fault data to the engine electronic control unit.
- While control necessitated by a fault is taking place, the system's functionality is limited to ensure vehicle and driver safety. It is possible to read the memorized diagnosis code using a Multi-Use Tester or from flashing of the warning lamp.
- Diagnosis codes shown by the Multi-Use Tester and those indicated by flashing of the warning lamp are different.
- The Multi-Use Tester is capable of showing more detailed diagnosis codes.

1.3 Electronic control unit connection diagram

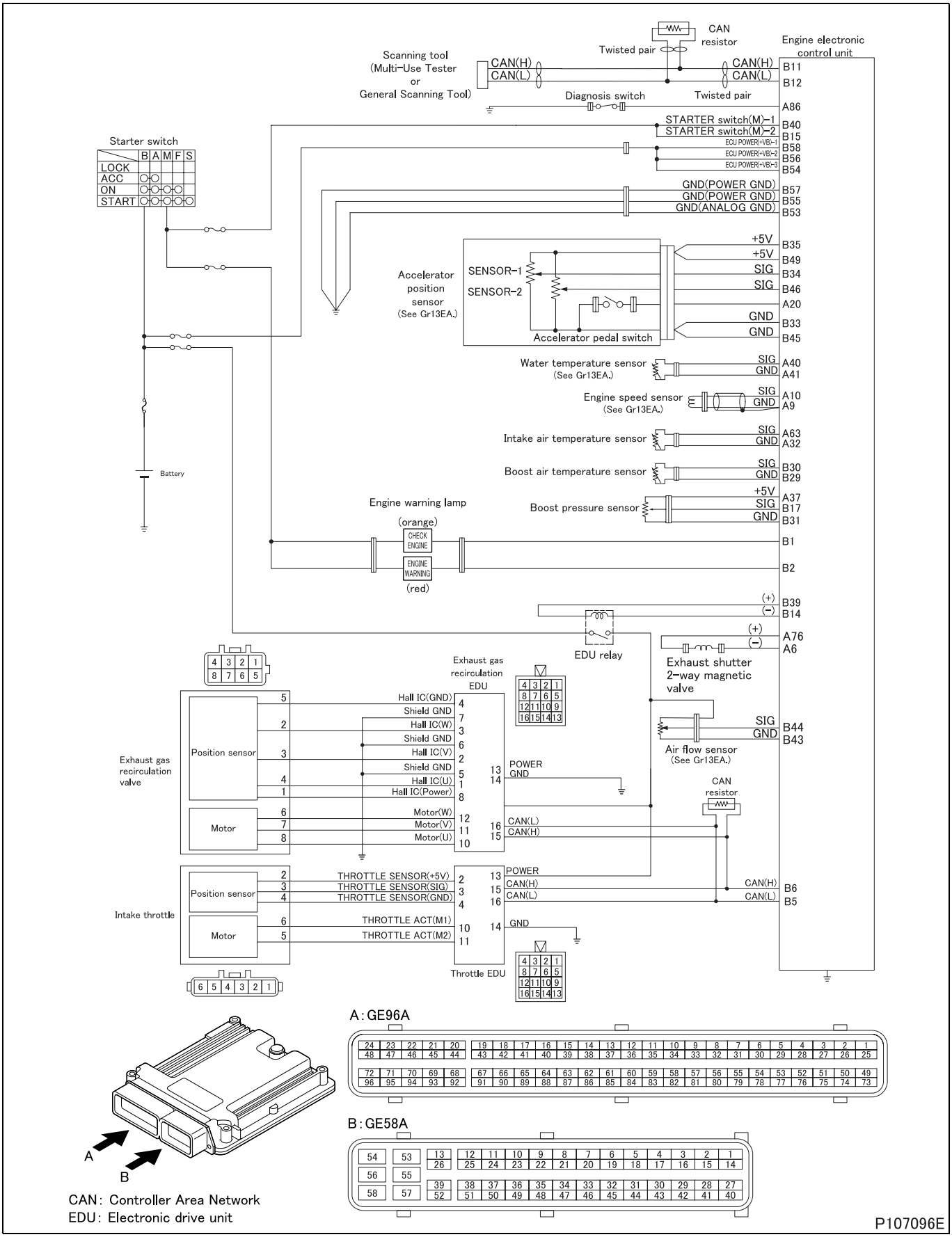

2. Crankcase Emission Control System

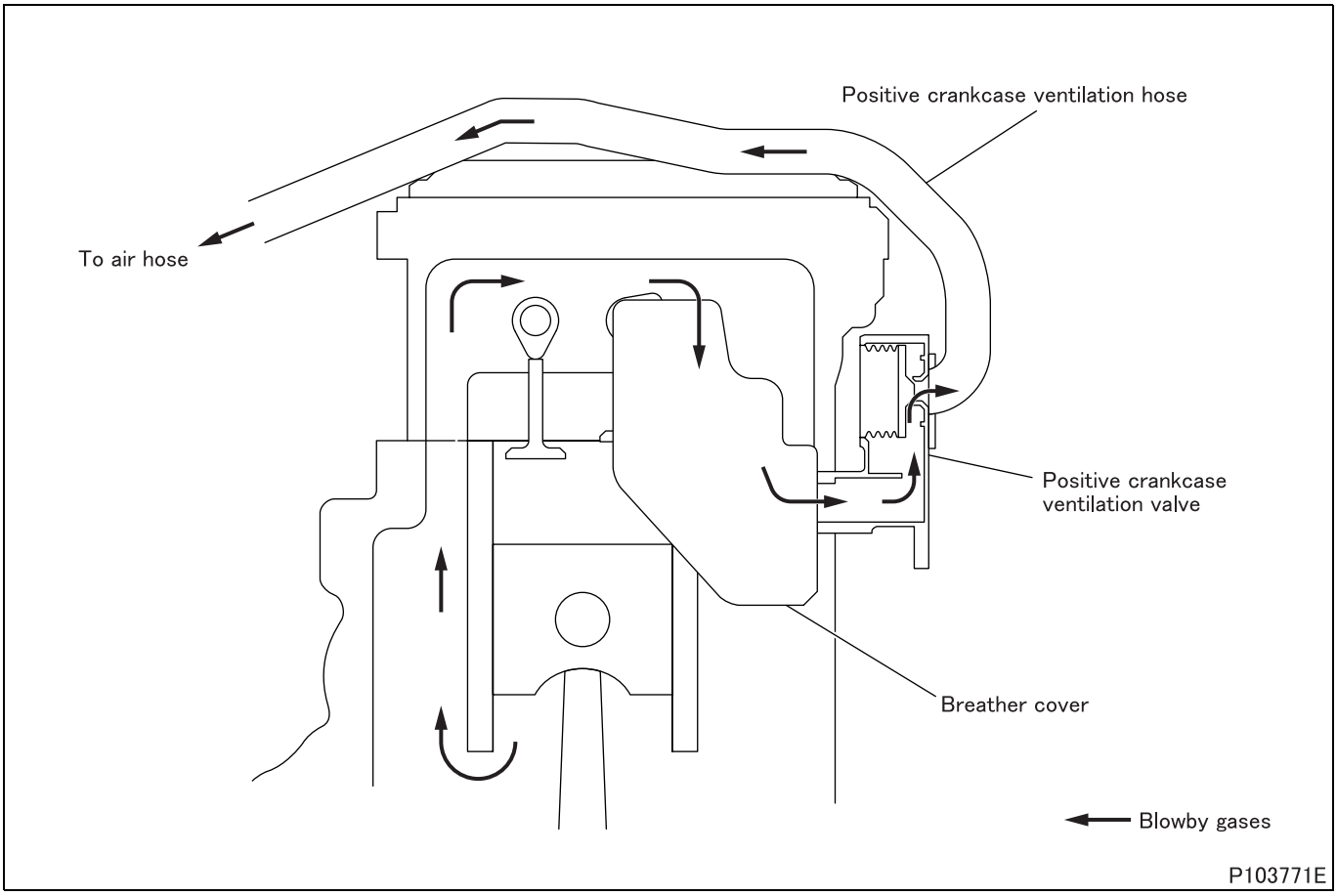

- The crankcase emission control system returns blowby gases to an air duct to prevent them from being released to the outside air.
- The positive crankcase ventilation valve keeps constant the pressure inside the crankcase.

EXHAUST GAS RECIRCULATION VALVE, PIPE AND COOLER

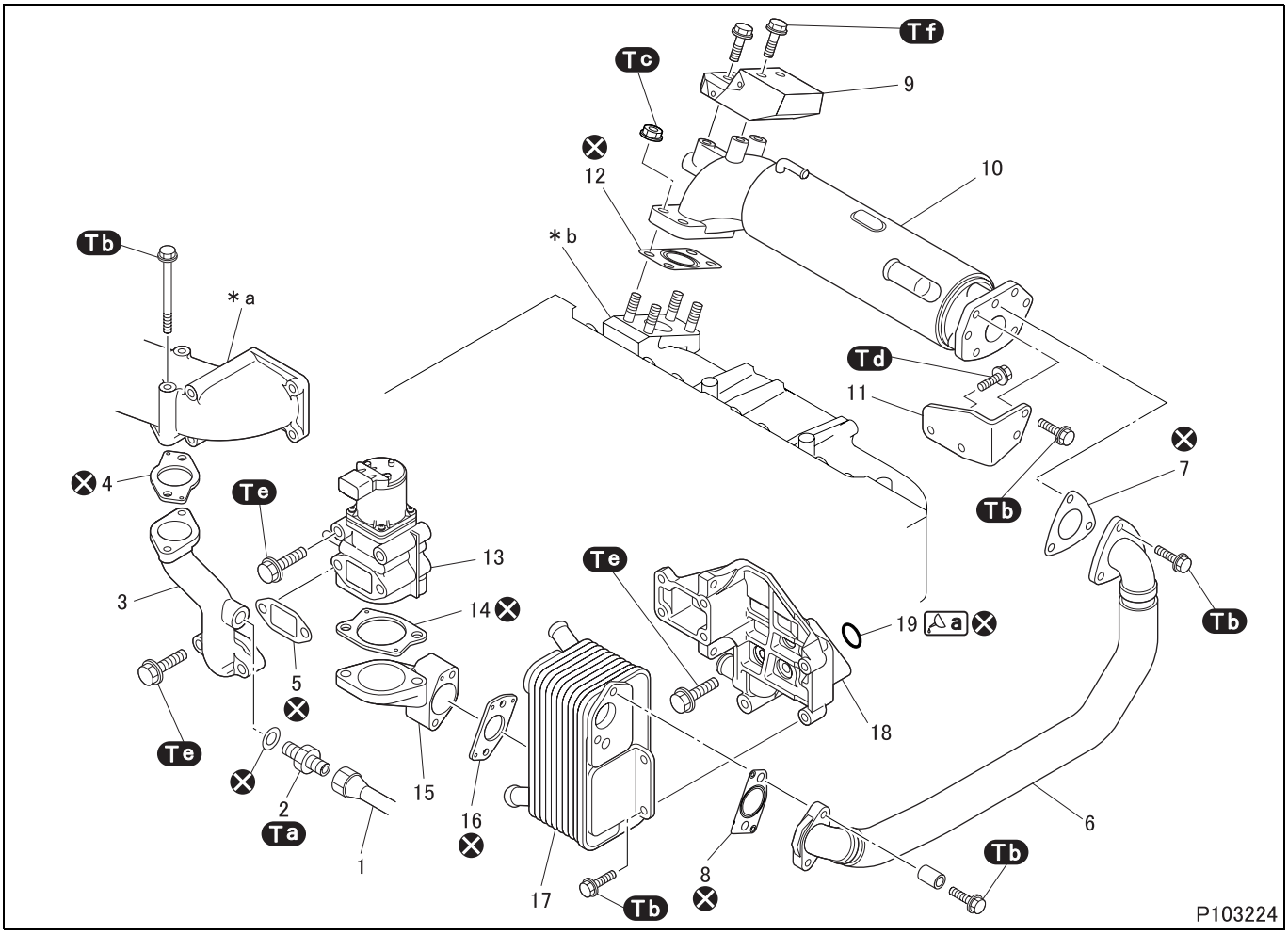

● Removal sequence

1 Air pipe
2 Connector
3 EGR pipe C
4 EGR gasket
5 EGR gasket A
6 EGR pipe A
7 EGR pipe gasket
8 EGR gasket
9 EGR cooler insulator
10 EGR cooler
11 EGR cooler bracket
12 EGR cooler gasket
13 EGR valve
14 EGR gasket B
15 EGR pipe B
16 EGR gasket
17 EGR cooler
18 EGR cooler bracket
19 O-ring

***a**: Air inlet pipe
***b**: Exhaust manifold
⊗: Non-reusable parts
EGR: Exhaust gas recirculation

- Even when all coolant in the crankcase has been drained out, approximately 1 dm^3 {1L} of coolant remains in the EGR cooler. Before removing the EGR cooler, make ready a container to catch the coolant.

● Installation sequence

Follow the removal sequence in reverse.

Service standards

Location	Maintenance item		Standard value	Limit	Remedy
10	Air leakage from EGR cooler	Leakage into coolant (air pressure: 300 kPa {44 psi, 3.1 kgf/cm^2})	0 cm^3 {0 mL}	–	Replace
		Leakage into exhaust gas (air pressure: 400 kPa {58 psi, 4.1 kgf/cm^2})	0 cm^3 {0 mL}		
17	Air leakage from EGR cooler	Leakage into coolant (air pressure: 196 kPa {28 psi, 2.0 kgf/cm^2})	0 cm^3 {0 mL}	–	Replace
		Leakage into exhaust gas (air pressure: 294 kPa {43 psi, 3.0 kgf/cm^2})	0 cm^3 {0 mL}		

Tightening torque (Unit: N·m {ft.lbs, kgf·m})

Mark	Parts to be tightened	Tightening torque	Remarks
Ta	Connector	58 {43, 5.9}	–
Tb	Bolt (EGR pipe A mounting)	24 {18, 2.5}	–
	Bolt (EGR pipe C mounting)		
	Bolt (EGR cooler mounting)		
Tc	Nut (EGR cooler mounting)	41 {30, 4.2}	–
Td	Bolt (EGR cooler bracket mounting)	28 {21, 2.9}	–
Te	Bolt (EGR valve mounting)	46 {34, 4.7}	–
	Bolt (EGR pipe C mounting)		
	Bolt (EGR cooler bracket mounting)		
Tf	Bolt (EGR cooler insulator mounting)	20 {15, 2.0}	–

Lubricant and/or sealant

Mark	Points of application	Specified lubricant and/or sealant	Quantity
a	O-ring	Soapy water	As required

◆Inspection procedures◆

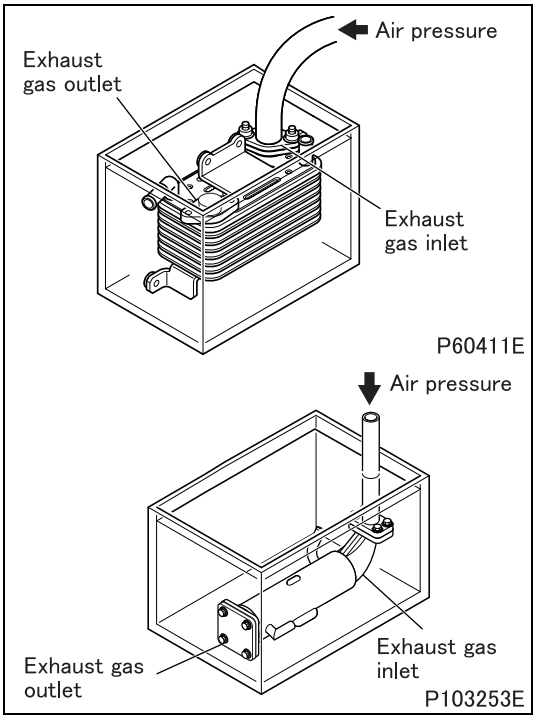

■ Inspection: Exhaust gas recirculation cooler

- Perform the following inspection. If any abnormality is found, replace the exhaust gas recirculation cooler.

(1) Exhaust gas passage side

- Fit a cover over the exhaust gas outlet of the exhaust gas recirculation cooler, and connect a hose to the exhaust gas inlet. Then, submerge the exhaust gas recirculation cooler in a container of water. Make sure the coolant passage is full of water.
- Apply specified air pressure through the hose. Check that air does not leak from any part of the exhaust gas recirculation cooler.

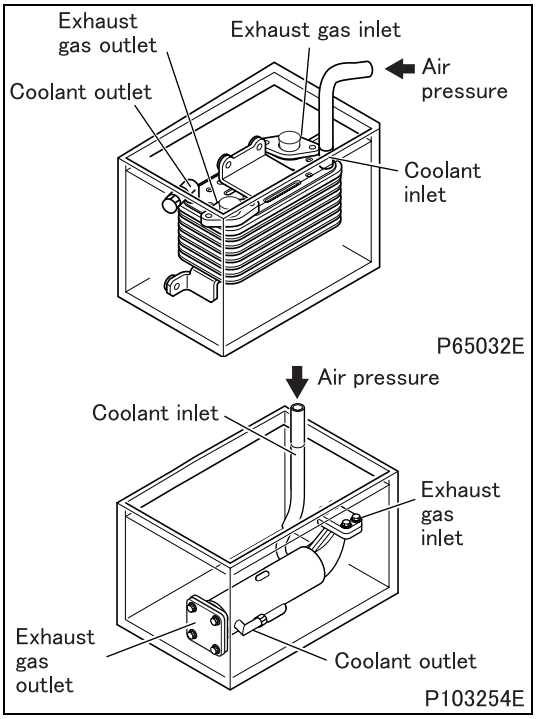

(2) Coolant passage side

- Fit covers over the exhaust gas recirculation cooler's exhaust gas inlet, exhaust gas outlet, and coolant outlet, and connect a hose to the coolant inlet. Then, submerge the exhaust gas recirculation cooler in a container of water.
- Apply specified air pressure through the hose. Check that air does not leak from any part of the exhaust gas recirculation cooler.

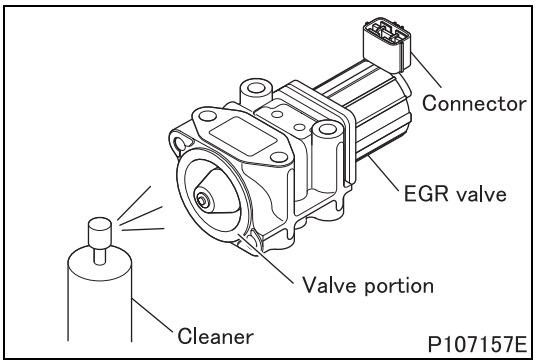

■ Inspection: Exhaust gas recirculation valve

- Check that the valve portion is free of soot, oily substance, etc.
- If not, clean the valve portion as follows.
- Spray a cleaner on the valve portion from 2 or 3 cm {0.79 or 1.18 in.} away.
  Recommended cleaners:
  Nonchlorinated solvent
- In 20 to 30 seconds after spraying, wipe the valve portion clear of the sprayed cleaner using a soft waste cloth the like.

CAUTION ⚠

- **Be sure to wait for 20 to 30 seconds before wiping. It takes the cleaner that long to dissolve foreign matter.**
- **Do not spray a cleaner on the intake throttle connector directly. If it is sprayed on the connector, immediately wipe it off.**

M E M O

CRANKCASE EMISSION CONTROL SYSTEM

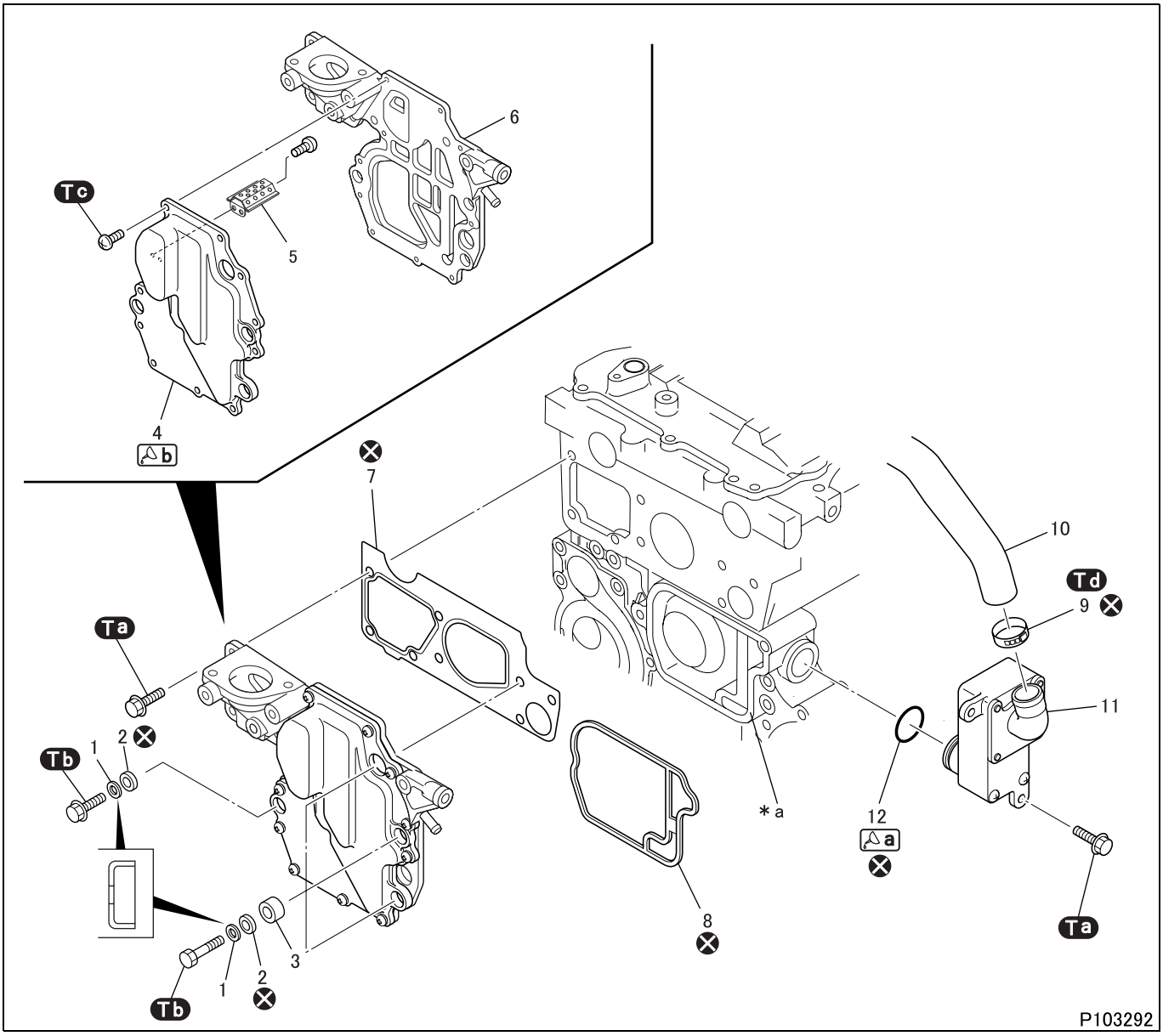

● **Removal sequence**

1 Washer
2 Rubber bushing
3 Spacer
4 Breather cover A
5 Separator plate
6 Breather cover B
7 Gasket
8 Breather gasket
9 Clamp
10 PCV hose
11 PCV valve
12 O-ring

***a**: Front case
⊗: Non-reusable parts
PCV: Positive crankcase ventilation

● **Installation sequence**

Perform installation by following the removal sequence in reverse.

Tightening torque (Unit: N·m {ft.lbs, kgf·m})

Mark	Parts to be tightened	Tightening torque	Remarks
Ta	Bolt (mounting of breather cover A, B)	23.2 {17, 2.4}	–
	Bolt (mounting of PCV valve)		
Tb	Bolt (mounting of breather cover A, B)	9.8 {7.2, 1.0}	–
Tc	Screw (mounting of breather cover A)	2 to 3 {1.5 to 2.2, 0.2 to 0.3}	–
Td	Clamp	9 to 11 {6.6 to 8.1, 0.9 to 1.1}	–

Lubricant and/or sealant

Mark	Points of application	Specified lubricant and/or sealant	Quantity
a	O-ring	Engine oil	As required
b	Mating surface of breather cover A	ThreeBond 1216	As required

Special tools

Mark	Tool name and shape	Part No.	Application
a	Pincer 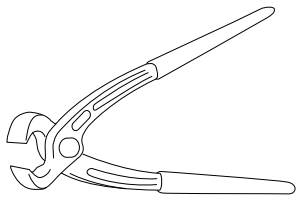 P103715	MH063865	Removal of hose clamp
b	Clamp installation tool 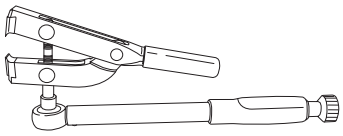 P103716	MH063866	Installation of hose clamp

◆Removal procedure◆

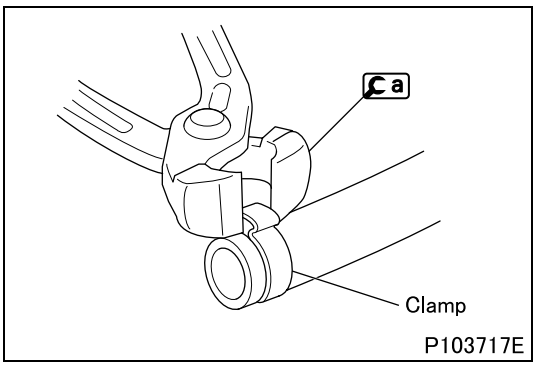

P103717E

■ Removal: Clamp

- To remove the clamp, cut the clamp using a.

◆Installation procedures◆

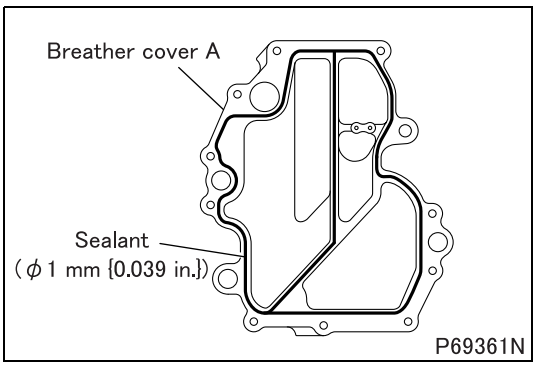

■ **Installation: Breather cover A**

- Clean the sealant application surfaces of each part.
- Apply a bead of sealant to the breather cover A evenly and without any breaks as shown in the illustration.
- Install the lower crankcase within three minutes of applying the sealant to the upper crankcase, being careful not to dislodge the sealant.

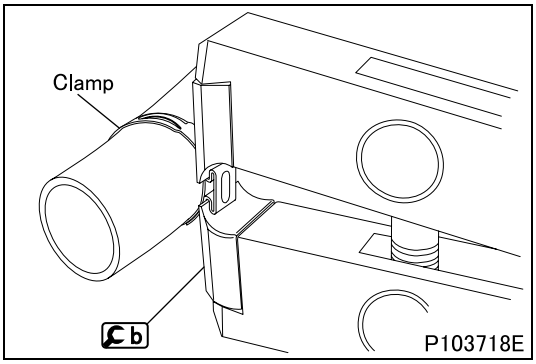

■ **Installation: Clamp**

- Pinch the projecting part of the clamp with b and tighten to the specified torque.

Group 21

Clutch

Table of Contents

Back

Home

MITSUBISHI FUSO TRUCK OF AMERICA, Inc.

Pub.No.TWSE0713-21

INDEX

SPECIFICATIONS 21-2

STRUCTURE AND OPERATION

1. **Clutch Control 21-3**
2. **Clutch Master Cylinder 21-4**
3. **Clutch Proper and Clutch Direct Power Cylinder..... 21-6**

TROUBLESHOOTING 21-8

ON-VEHICLE INSPECTION AND ADJUSTMENT

1. **Replacement of Brake Fluid (Clutch System) 21-10**
2. **Air Bleeding of Brake Fluid (Clutch System) 21-12**
3. **Inspection of Clutch Disc Wear Limit 21-14**

CLUTCH PEDAL 21-16

CLUTCH MASTER CYLINDER..... 21-20

CLUTCH PROPER 21-22

CLUTCH CONTROL..... 21-26

SPECIFICATIONS

Item	Specifications
Clutch model	C5W33
Drive type	Strap drive
Clutch disc type	Dry, single plate type
Pressure plate type	Diaphragm spring type
Control system	Fluid pressure type
Clutch master cylinder manufacturer	NISSIN KOGYO
Clutch direct power cylinder manufacturer	NISSIN KOGYO

1. Clutch Control

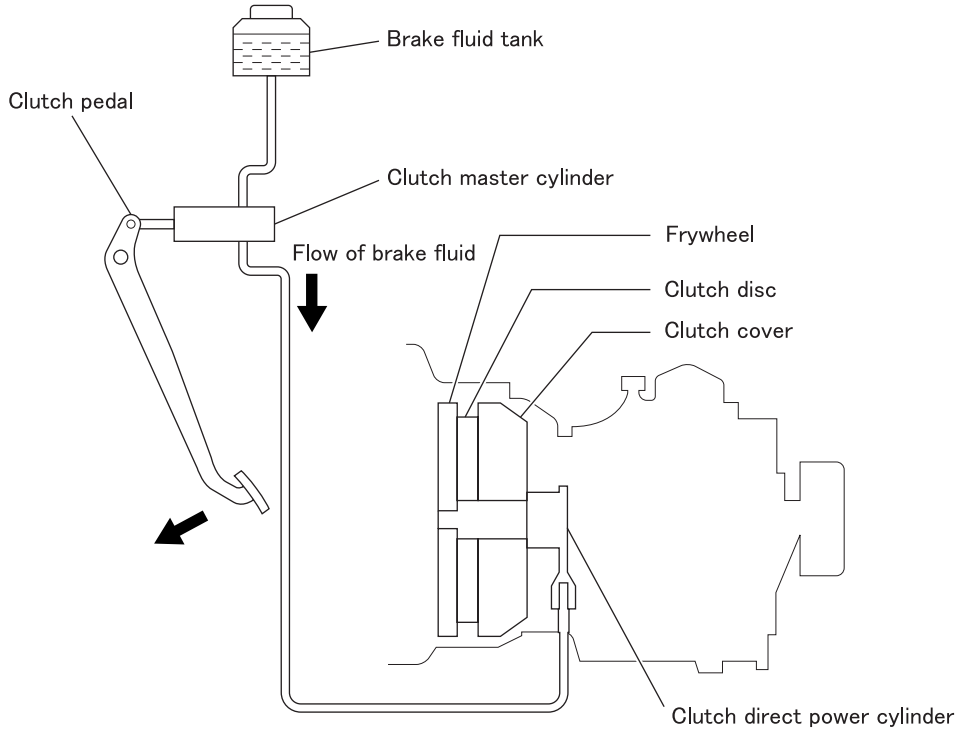

- Fluid pressure is used to control the clutch operation.
- When the clutch pedal is pressed, the boosted force is then applied to the clutch master cylinder. This pressurizes the brake fluid inside the clutch master cylinder, pushing the clutch direct power cylinder and disengaging the clutch.

2. Clutch Master Cylinder

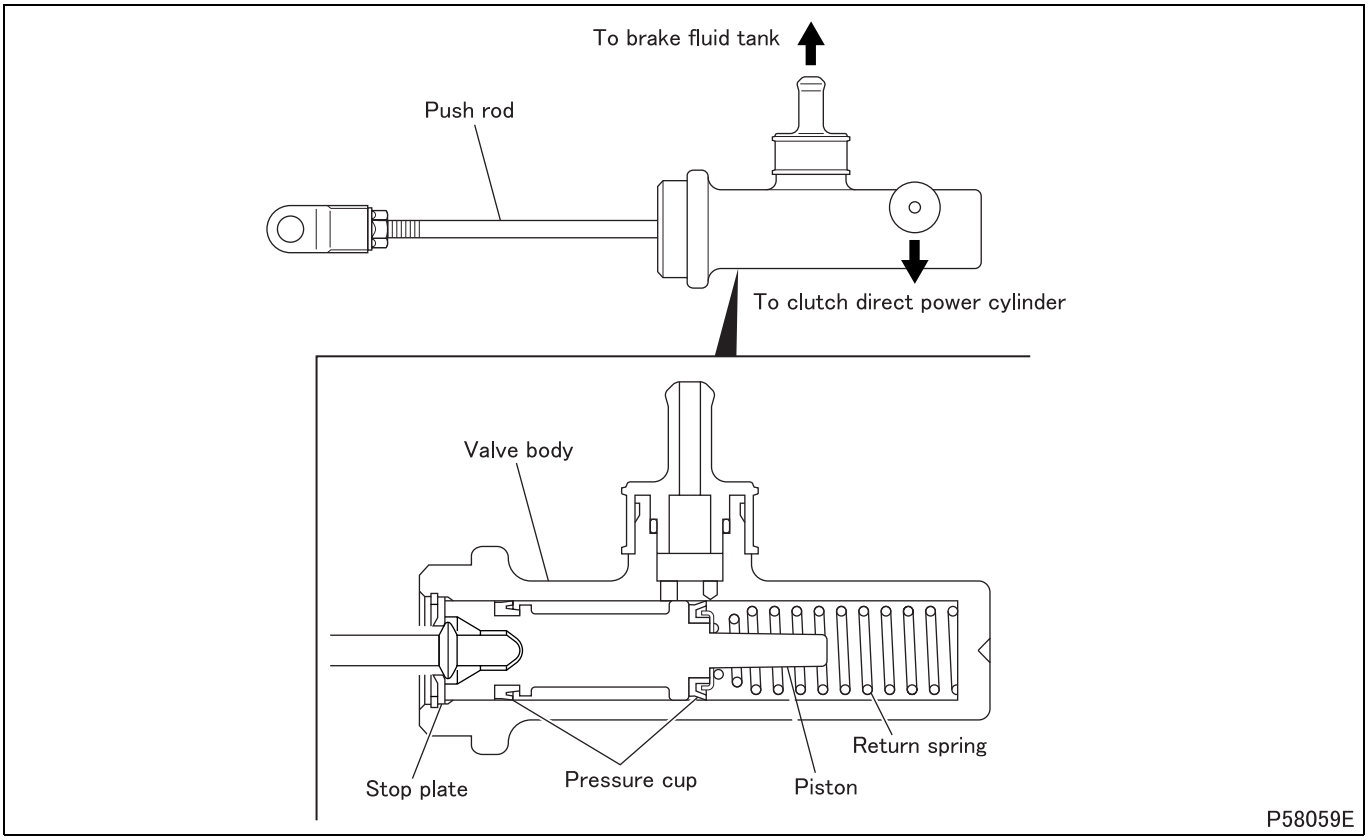

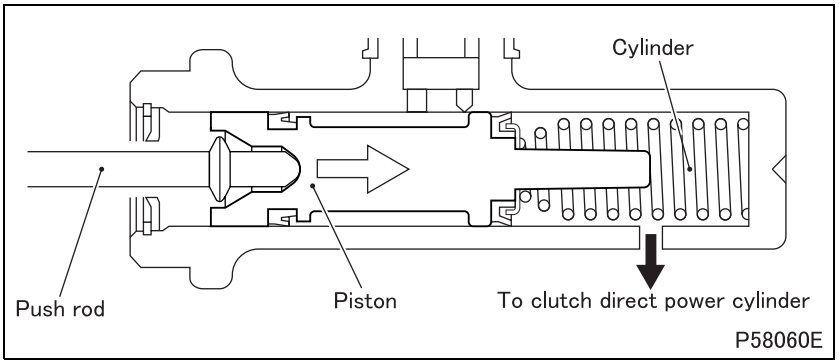

2.1 When clutch pedal is pressed

- The piston is pushed to the right by the push rod, pressurizing the brake fluid in the cylinder.
- This brake fluid pressure is transmitted to the clutch direct power cylinder.

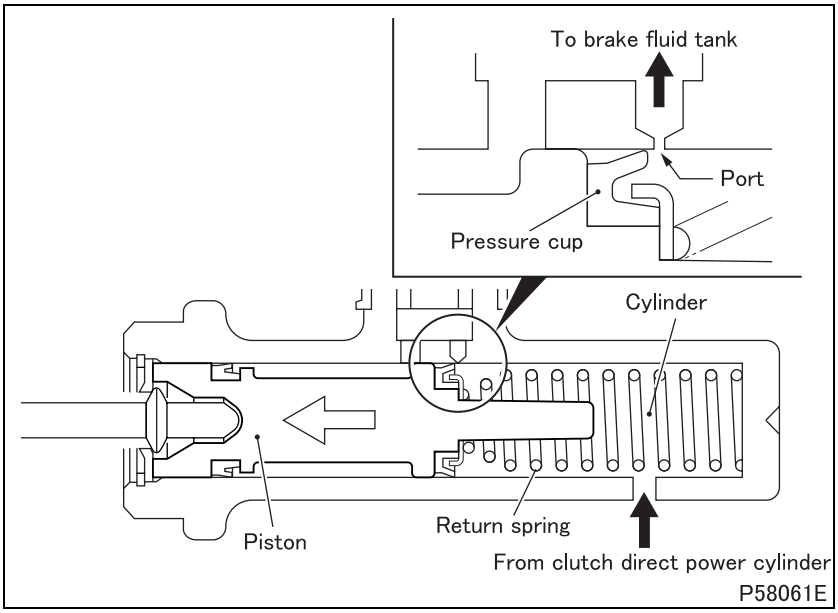

2.2 When clutch pedal is released

- The piston is pushed back to the left by the combined force of oil pressure from the clutch direct power cylinder and the return spring.
- This opens up the port that has been blocked by the pressure cup, connecting the cylinder to the brake fluid tank. This allows the oil pressure to completely drain to the tank.

3. Clutch Proper and Clutch Direct Power Cylinder

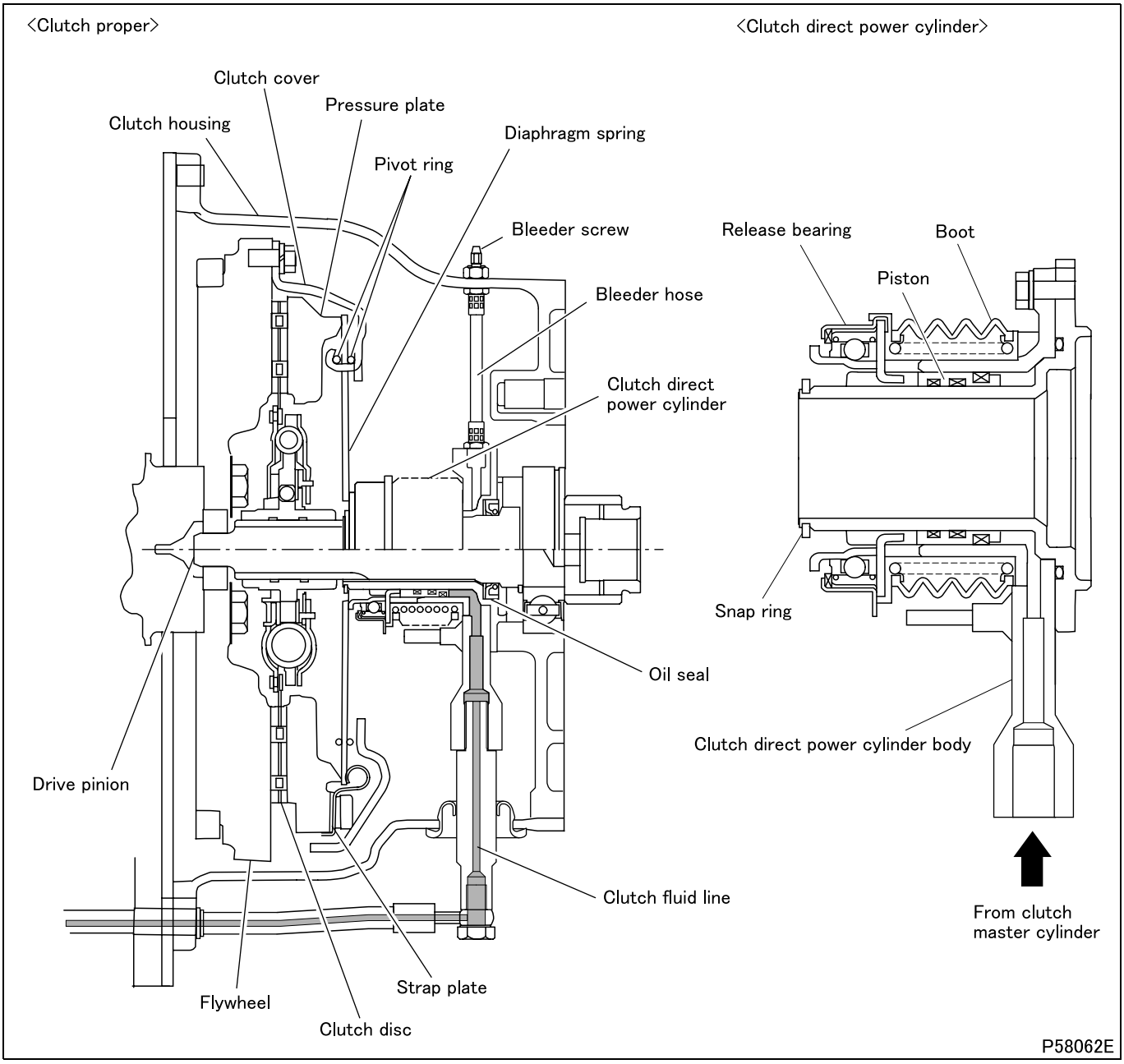

- Clutch engagement and disengagement are controlled by the brake fluid pressure from the clutch master cylinder acting on the piston of the clutch direct power cylinder, and are achieved by the operation of the piston and the release bearing.

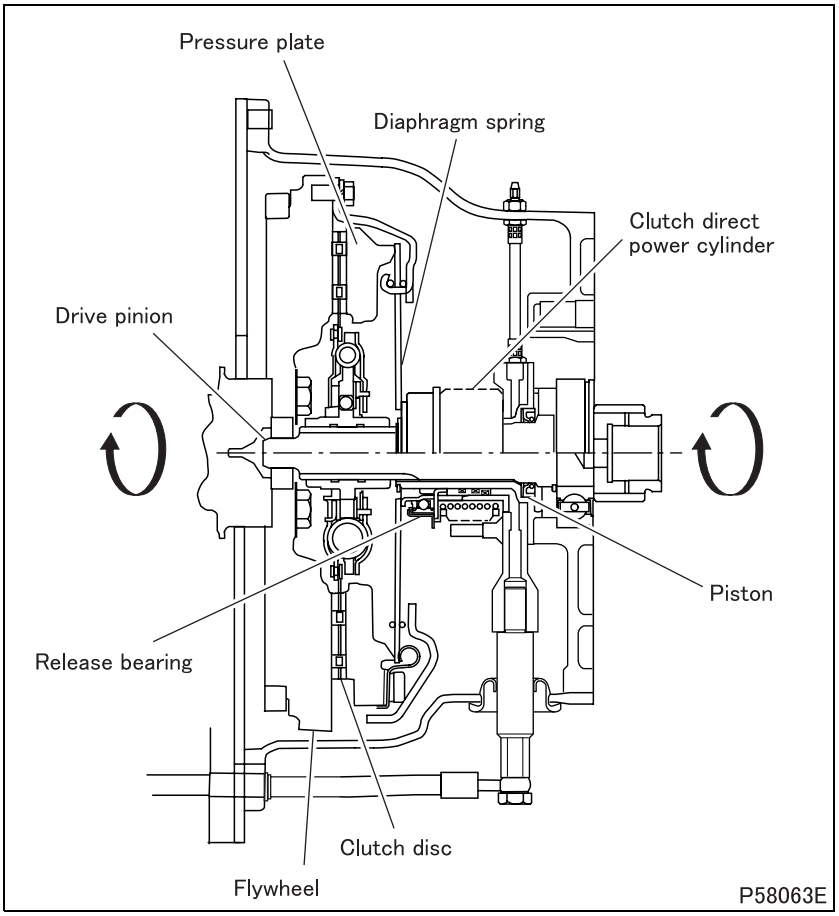

3.1 When clutch pedal is released

- There is no brake fluid pressure acting on the clutch direct power cylinder. The piston and release bearing remain in their home positions.
- The force of the diaphragm spring acts on the pressure plate, which in turn keeps the clutch disc pressed against the flywheel.
- Pressed against the flywheel, the clutch disc rotates together with the flywheel and transmits the engine power to the transmission drive pinion.

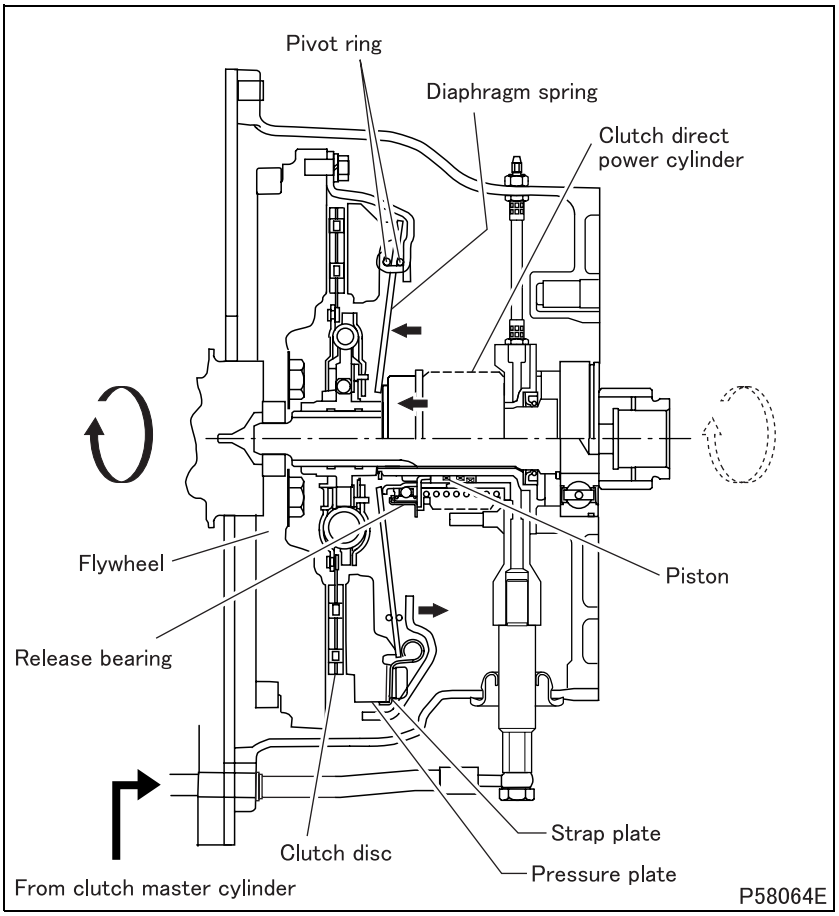

3.2 When clutch pedal is pressed

- Brake fluid pressure from the clutch master cylinder moves the piston in the clutch direct power cylinder.
- As it moves, the piston pushes the release bearing, which in turn pushes the diaphragm spring.
- The diaphragm spring pivots around the pivot ring. This movement, via the strap plate, causes the pressure plate to retract from the flywheel. As a result, the clutch disc separates from the flywheel, cutting off the transmission of engine power to the transmission.

Possible causes / Symptoms		Clutch disengaged but drags	Clutch slips	Clutch does not engage smoothly	Clutch makes noise on disengagement	Clutch makes noise on engagement	Judder when vehicle starting	Clutch pedal requires too much effort	Reference Gr
Clutch cover	Diaphragm spring heights uneven	O	O	O			O		
	Diaphragm spring fatigued		O	O					
	Pressure plate warped or faulty	O	O	O			O		
	Loose rivets	O		O			O		
	Strap plate bent	O		O	O		O		
Clutch disc	Disc deformed	O		O			O		
	Disc rivets loose			O			O		
	Disc torsion spring fatigued or damaged					O			
	Spline worn	O		O			O		
	Spline rusted	O		O			O		
	Facing worn		O						
	Facing surface hardened		O	O			O		
	Facing oily or greasy		O	O					
Clutch pedal	Pedal free play insufficient		O	O					
	Pedal free play excessive	O		O					
	Pedal stroke insufficient	O							
	Pedal sliding part faulty			O			O	O	
Clutch master cylinder	Piston and pressure cup sliding movement faulty	O	O	O				O	
	Spring fatigued		O						
	Brake fluid passage port clogged	O	O	O				O	
Clutch direct power cylinder	Piston and piston cup sliding movement faulty	O	O	O				O	
	Brake fluid passage port clogged	O	O	O				O	
	Release bearing faulty	O			O	O			
Transmission drive pinion spline worn		O		O					Gr22
Engine idling speed too low		O				O			Gr13A
Engine mounting fatigued							O		Gr11
Flywheel warped, deformed or worn forming steps		O	O	O			O		
Flywheel pilot bearing faulty		O							
Air mixed in clutch hydraulic system		O							
Clutch hydraulic system leaking		O							

M E M O

ON-VEHICLE INSPECTION AND ADJUSTMENT

1. Replacement of Brake Fluid (Clutch System)

- Clutch fluid (brake fluid) is shared by the clutch and brake systems, and is divided in the brake fluid tank into the two systems. This section describes the replacement of the clutch fluid (brake fluid) for the clutch system. In order to completely replace the clutch fluid (brake fluid), the brake fluid in the brake system should also be replaced. (See Gr35A.)

Tightening torque (Unit: N·m {ft.lbs, kgf·m})

Mark	Parts to be tightened	Tightening torque	Remarks
–	Bleeder screw	6.8 to 8.8 {5.0 to 6.5, 0.7 to 0.9}	–

Lubricant and/or sealant

Mark	Points of application	Specified lubricant and/or sealant	Quantity
–	Brake fluid tank	Brake fluid (SAE J1703f or FMVSS No. 116 DOT3)	As required

CAUTION ⚠

- **Brake fluid is corrosive on paintwork. Be careful not to spill it onto the paintwork.**
- **If brake fluid is spilled onto the paintwork, immediately wipe it off.**
- **Be sure to use new FUSO Brake Fluid (DOT3). Do not mix it with brake fluid of different properties or mineral oil (gas oil, engine oil, gear oil, automatic transmission fluid, etc.). This will alter the original properties of FUSO Brake Fluid, causing the boiling point to drop as well as the clutch rubber parts to swell. Faulty operation of the clutch will result.**
- **Ensure that no foreign matter or water enter into the brake fluid when refilling it, as they will cause faulty clutch operation.**
- **Use a mug exclusively kept for the specified brake fluid. This ensures that no brake fluid of different properties or mineral oil enter into the system.**

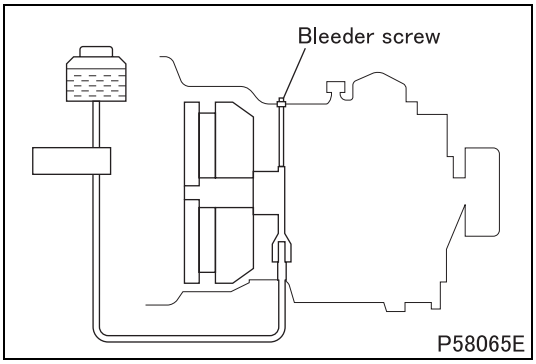

1.1 Work before replacement

- Install one end of a vinyl pipe onto the bleeder screw. Place the loose end into a container.

1.2 Replacement of brake fluid

- Replace the brake fluid in the following sequence.

CAUTION ⚠

- **Replacement of old brake fluid with new brake fluid in the clutch fluid line can be recognized by a change in color of the brake fluid being discharged through the vinyl pipe.**

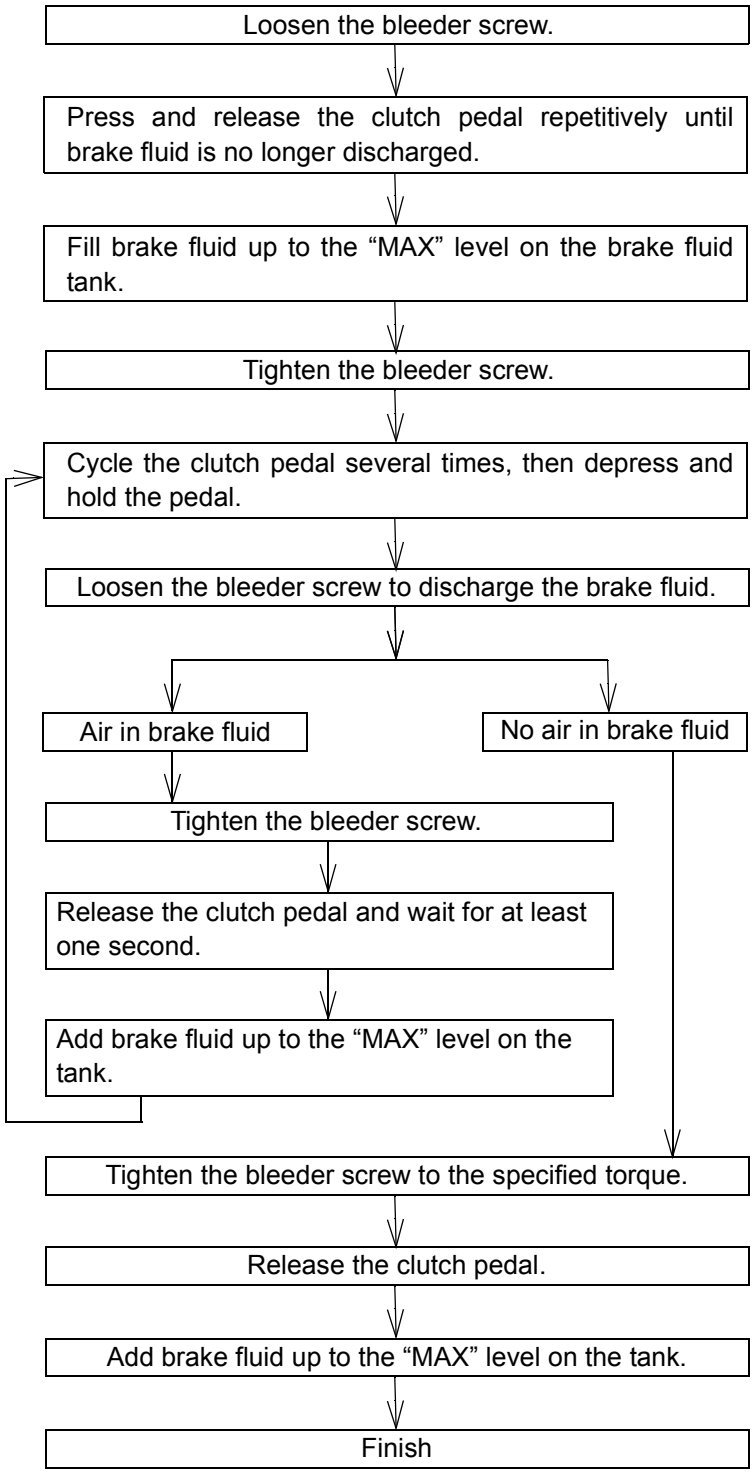

2. Air Bleeding of Brake Fluid (Clutch System)

- Clutch fluid (brake fluid) is shared by the clutch and brake systems, and is divided in the brake fluid tank into the two systems. This section describes the air bleeding procedures for the clutch system. For air bleeding procedures for the brake system (See Gr35A.)

Tightening torque (Unit: N·m {ft.lbs, kgf·m})

Mark	Parts to be tightened	Tightening torque	Remarks
–	Bleeder screw	6.8 to 8.8 {5.0 to 6.5, 0.7 to 0.9}	–

Lubricant and/or sealant

Mark	Points of application	Specified lubricant and/or sealant	Quantity
–	Brake fluid tank	Brake fluid (SAE J1703 or FMVSS No. 116 DOT3)	As required

CAUTION ⚠

- **Brake fluid is corrosive on paintwork. Be careful not to spill it onto the paintwork.**
- **If brake fluid is spilled onto the paintwork, immediately wipe it off.**
- **Be sure to use new FUSO Brake Fluid (DOT3). Do not mix it with brake fluid of different properties or mineral oil (gas oil, engine oil, gear oil, automatic transmission fluid, etc.). This will alter the original properties of FUSO Brake Fluid, causing the boiling point to drop as well as the clutch rubber parts to swell. Faulty operation of the clutch will result.**
- **Ensure that no foreign matter or water enter into the brake fluid when refilling it, as they will cause faulty clutch operation.**
- **Use a mug exclusively kept for the specified brake fluid. This ensures that no brake fluid of different properties or mineral oil enter into the system.**

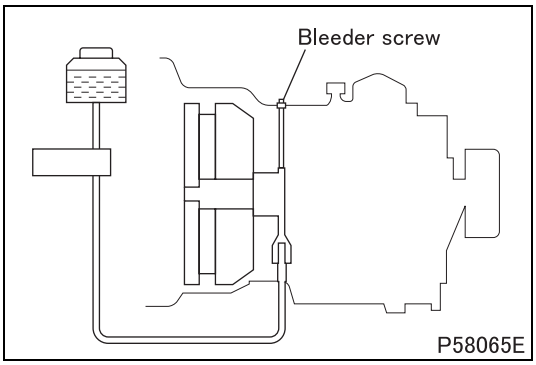

2.1 Work before air bleeding

- Install one end of a vinyl pipe onto the bleeder screw. Place the loose end into a container.

2.2 Air bleeding of brake fluid

- Bleed the air in the following sequence.

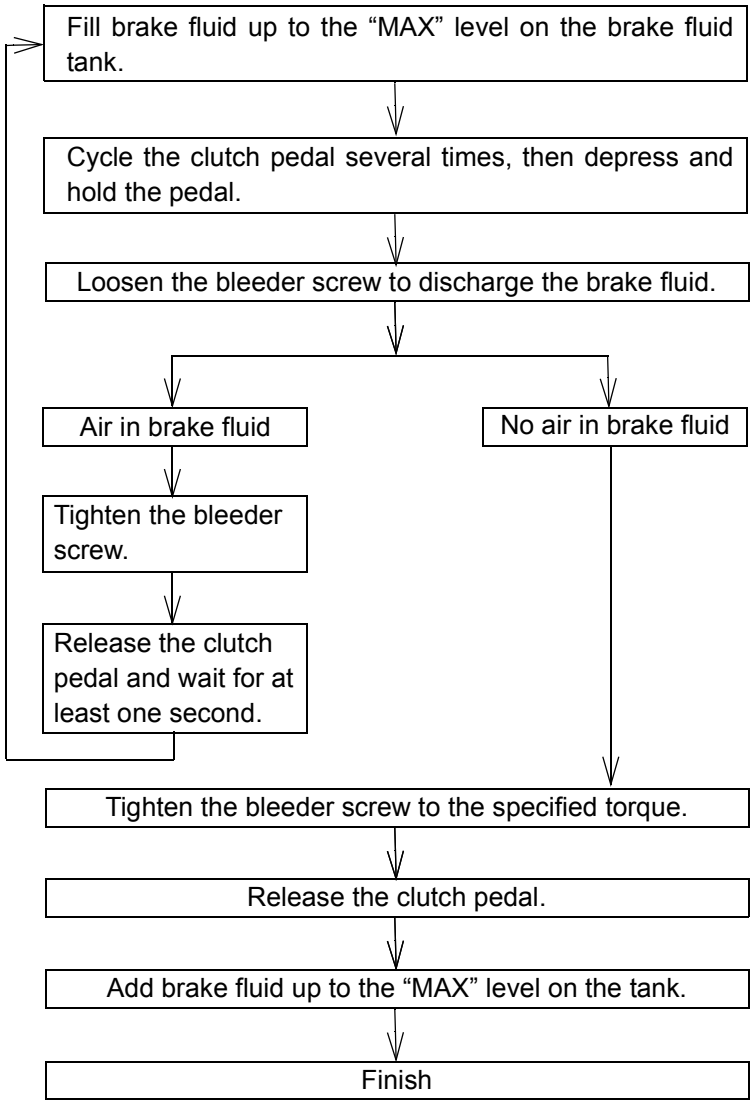

3. Inspection of Clutch Disc Wear Limit

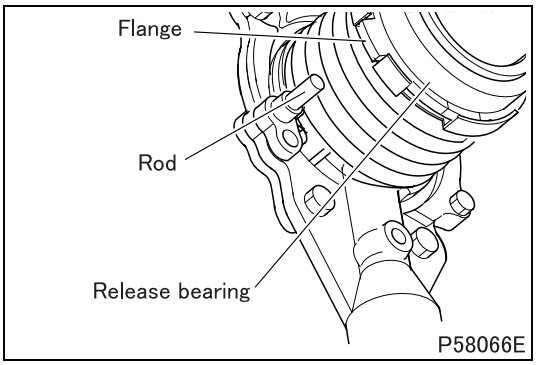

- Remove the grommet from the clutch housing and make sure that the rod of the clutch direct power cylinder does not reach the flange of the release bearing.
- If the rod reaches the flange, replace the clutch disc.

M E M O

CLUTCH PEDAL

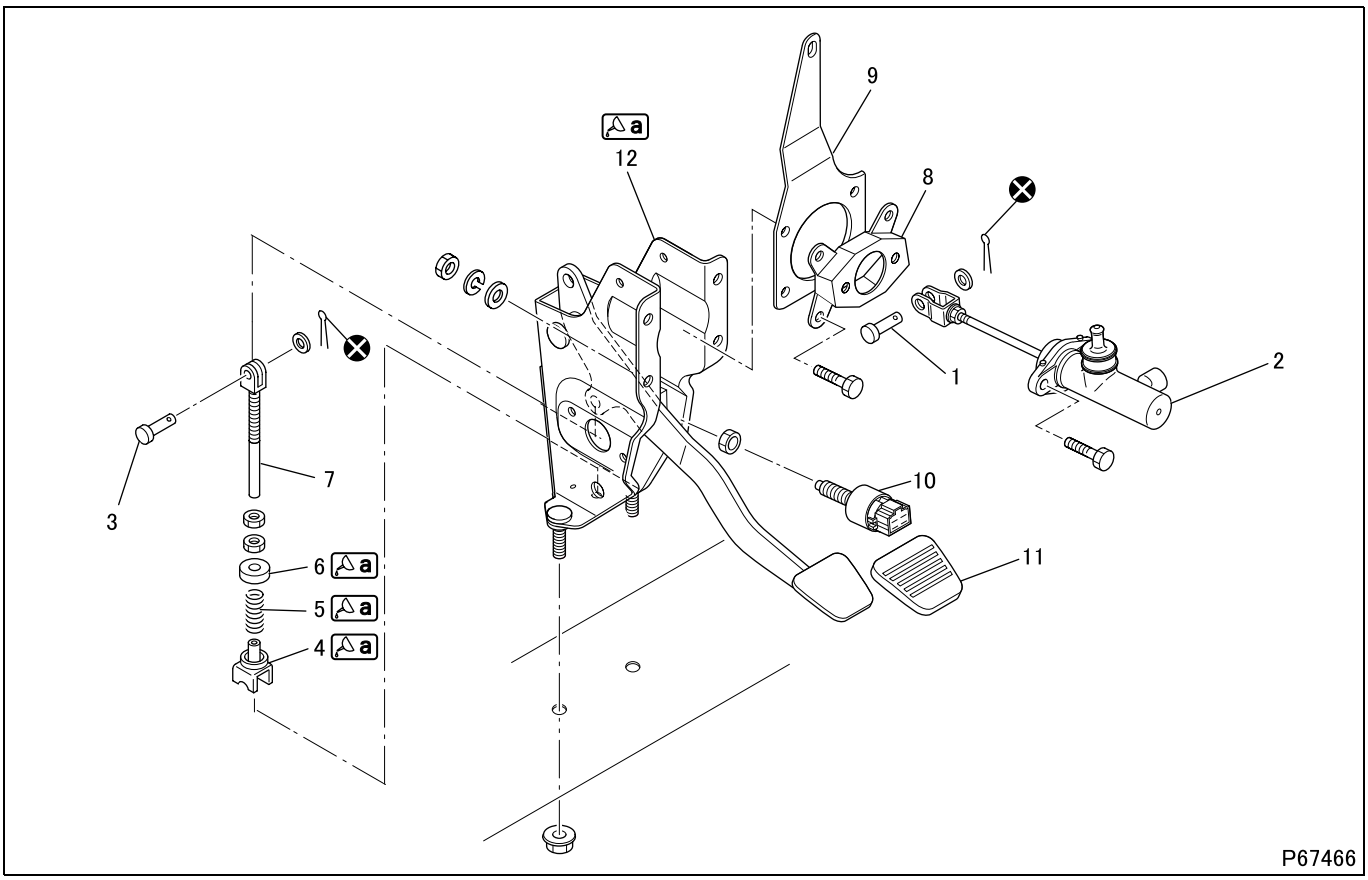

● **Removal sequence**

1 Clevis pin
2 Clutch master cylinder (See later section.)
3 Clevis pin
4 Spring holder
5 Return spring
6 Plate
7 Spring assist rod
8 Cylinder bracket
9 Booster bracket
10 Clutch switch
11 Pedal pad
12 Clutch pedal

⊗: Non-reusable parts

● **Installation sequence**

Follow the removal sequence in reverse.

Service standards (Unit: mm {in.})

Location	Maintenance item	Standard value	Limit	Remedy
2	Clearance between push rod and piston of clutch master cylinder	0.2 to 1.2 {0.0079 to 0.047}	–	Adjust
5	Return spring load (installed length: 35.6 {1.40})	225 N {51 lbs., 23.1 kgf}	205 N {46 lbs., 20.8 kgf}	Replace
10	Installed clearance of clutch switch (for exhaust brake)	0.1 to 1.5 {0.0039 to 0.059}	–	Adjust
12	Clutch pedal free play	0.2 to 4.0 {0.0079 to 0.16}	–	Replace

Lubricant and/or sealant

Mark	Points of application	Specified lubricant and/or sealant	Quantity
a	Sliding surface of spring holder	Chassis grease [NLGI No. 1 (Ca soap)]	As required
	Sliding surface of return spring		
	Sliding surface of plate		
	Clutch master cylinder and spring assist rod mounting clevis-pin hole bushing's inner face of clutch pedal.		

◆Removal procedure◆

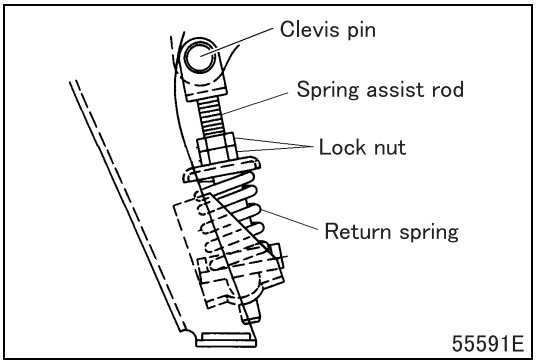

■ **Removal: Spring assist rod**

- Loosen the lock nut to release the load on the return spring. Then, remove the clevis pin and remove the spring assist rod.

◆Work after installation◆

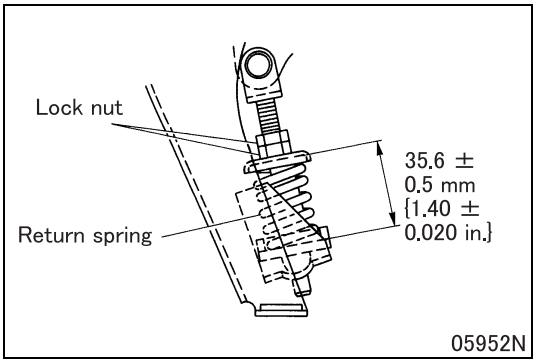

■ **Adjustment: Return spring**

- Tighten the lock nut such that the return spring is set to the illustrated length.

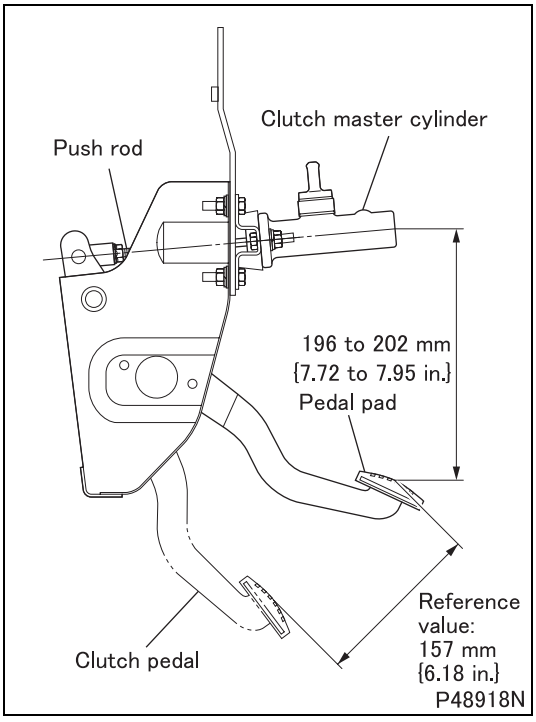

■ **Adjustment: Clutch pedal**

- Adjust the push rod of the clutch master cylinder such that the distance between the center of the clutch pedal pad and the center of the clutch master cylinder is set to the value indicated in the drawing.

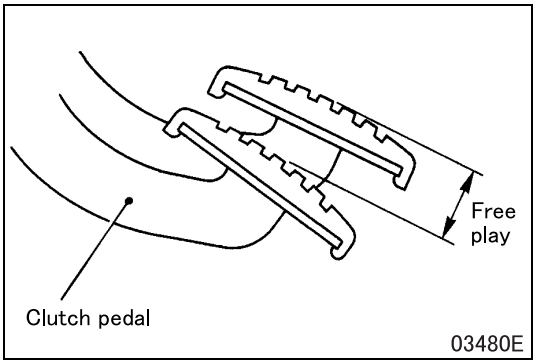

■ **Inspection: Clutch pedal free play**

- After installing the clutch master cylinder, check the clutch pedal free play as follows.
- Using a finger, press the clutch pedal pad in the center until resistance is felt. Measure the distance that the pedal has traveled.

NOTE

- **Do not press the clutch pedal pad until a second resistance is felt (which is the point at which the clutch master cylinder's push rod contacts the piston).**

- If the measured distance does not conform to the standard value, replace the clutch pedal.

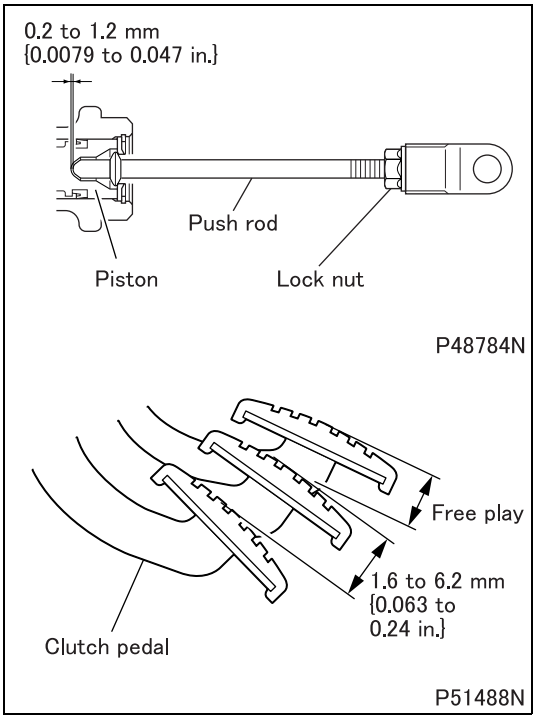

■ **Adjustment: Clearance between clutch master cylinder's push rod and piston**

- Adjust the clearance between the clutch master cylinder's push rod and piston by using the clutch pedal as follows.
- Using a finger, press the clutch pedal in the center.
- Set the pedal travel, from the point at which the first resistance is felt to the point at which the second resistance is felt, to the illustrated value. (This distance corresponds to the clearance between the push rod and the piston.) This is done by turning the push rod in or out.
- With the pedal travel set to the illustrated value, the push rod-to-piston clearance should conform to the standard value.
- After the adjustment, tighten the lock nut to the specified torque.

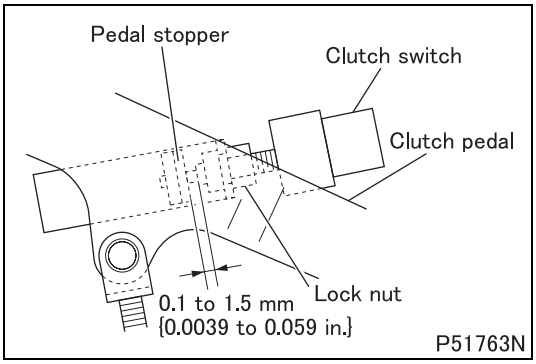

■ **Adjustment: Clearance between clutch switch (for exhaust brake) and pedal**

- With the clutch pedal adjusted as above, set the clearance between the end of the threaded portion of the clutch switch and the pedal stopper to the value indicated in the drawing. Tighten the locknut.

CAUTION ⚠

- **Do not allow the threaded end of the clutch switch to come into contact with the clutch pedal stopper during the adjustment operation.**

CLUTCH MASTER CYLINDER

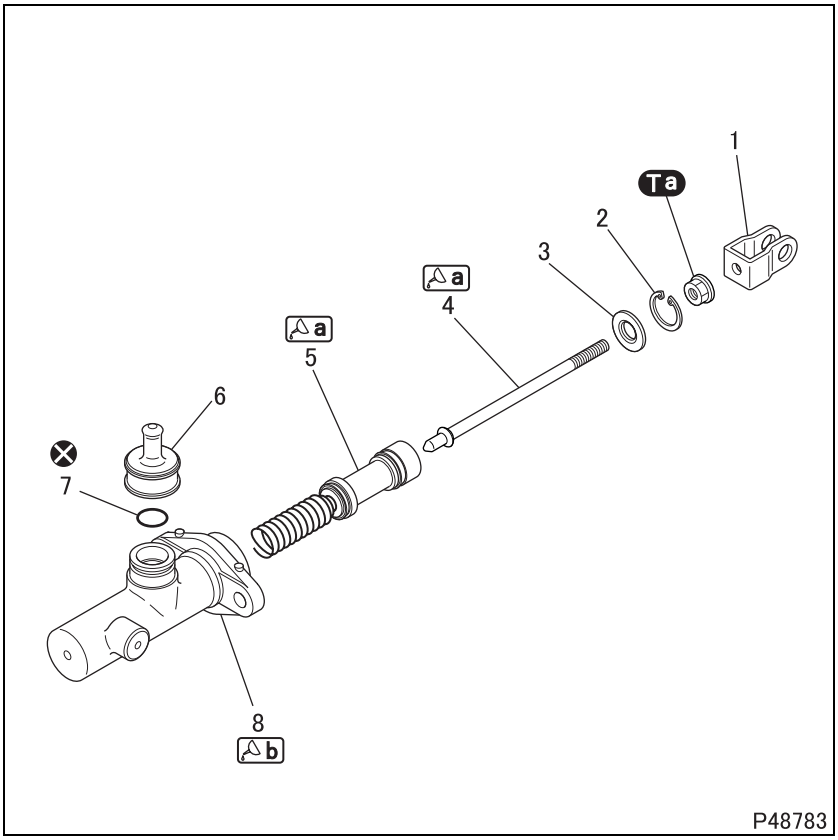

● **Disassembly sequence**

1 Clevis
2 Circlip
3 Stop plate
4 Push rod
5 Piston
6 Union collar
7 O-ring
8 Cylinder body

⊗: Non-reusable parts

● **Assembly sequence**

Follow the disassembly sequence in reverse.

Repair kit: Clutch master cylinder kit

Service standards (Unit: mm {in.})

Location	Maintenance item	Standard value	Limit	Remedy
5, 8	Clearance between piston and cylinder body	0.02 to 0.1 {0.00079 to 0.0039}	0.2 {0.0079}	Replace

Tightening torque (Unit: N·m {ft.lbs, kgf·m})

Mark	Parts to be tightened	Tightening torque	Remarks
Ta	Lock nut	15 to 20 {11 to 15, 1.5 to 2.0}	–

Lubricant and/or sealant

Mark	Points of application	Specified lubricant and/or sealant	Quantity
a	Push rod end contact face with piston	COSMO Rubber Grease	0.1 to 0.3 g {0.0035 to 0.011 oz.}
	Piston cup sliding face against cylinder body		
b	Cylinder body inner face	Metal rubber #20 (rust preventive oil)	As required

◆**Removal procedure**◆

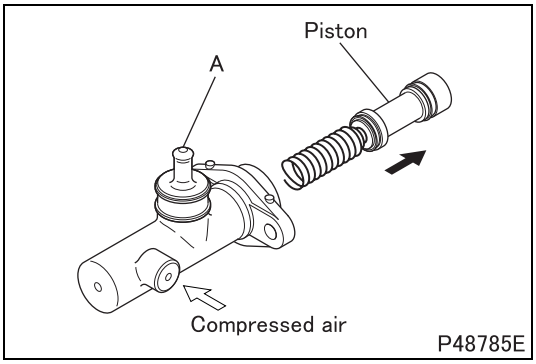

■ **Removal: Piston**

- With opening A blocked, feed compressed air gradually starting from 0 kPa {0 psi, 0 kgf/cm^2} to remove the piston.

WARNING ⚠

- **Do not apply compressed air suddenly at high pressure. Otherwise, the piston will fly out with full force.**

M E M O

CLUTCH PROPER

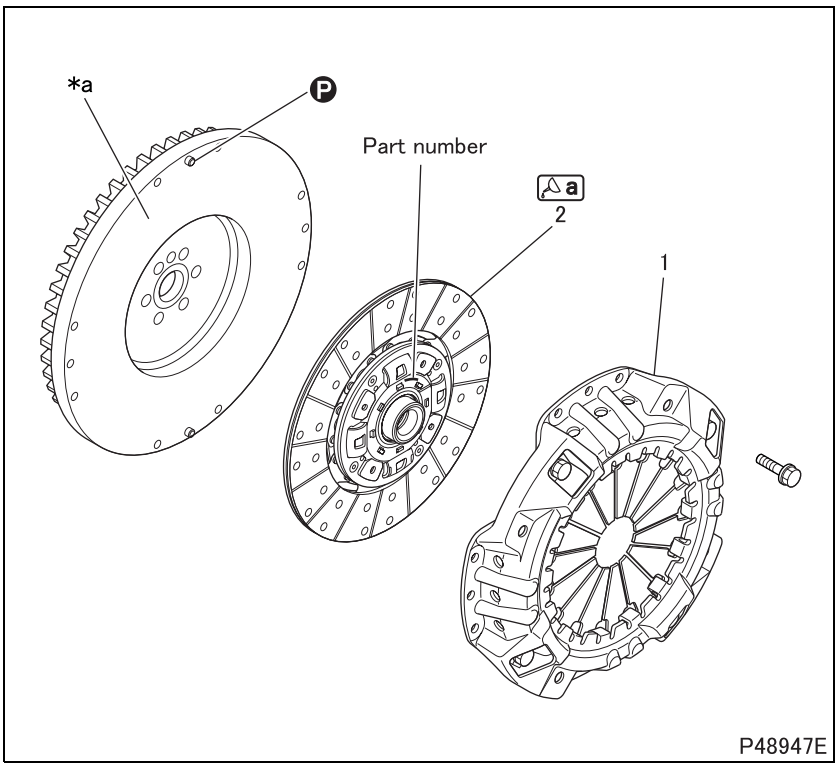

● **Removal sequence**

1 Clutch cover
2 Clutch disc

***a**: Flywheel
Ⓟ: Locating pin

● **Installation sequence**

Follow the removal sequence in reverse.

CAUTION ⚠

- **To prevent clutch slippage, keep the surfaces of the clutch cover, clutch disc and flywheel free from oil and grease.**

Service standards (Unit: mm {in.})

Location	Maintenance item		Standard value	Limit	Remedy
1	Pressure plate flatness		–	0.05 {0.0020}	Replace
	Diaphragm spring finger height unevenness		–	1.0 (0.039}	
2	Clutch disc	Depth from facing surface to rivet	1.8 to 2.4 {0.071 to 0.094}	0.2 {0.0079}	Replace
		Play in revolving direction in splines	0.05 to 0.23 {0.0020 to 0.0091}	0.5 {0.020}	
		Vertical runout	1.0 {0.039} or less	1.5 {0.059}	
		Lateral runout	0.8 {0.031} or less	1.5 {0.059}	

Lubricant and/or sealant

Mark	Points of application	Specified lubricant and/or sealant	Quantity
a	Entire surface of splines	Molybdenum disulfide grease [NLGI No. 2 (Li soap)]	0.8 to 1.1 g {0.028 to 0.039 oz.}
	Fill in the grease grooves of splines		3.2 to 4.2 g {0.11 to 0.15 oz.}

Special tools (Unit: mm {in.})

Mark	Tool name and shape	Part No.	Application
ⓒa	Clutch alignment arbor A: ϕ28.94 {1.14}, B: ϕ20 {0.79}, C: 120 {4.72} 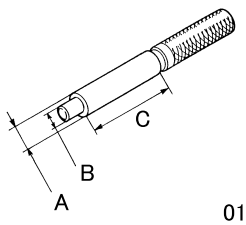 01270	MH061387	Holding clutch disc
ⓒb	Sleeve A: ϕ45 {1.77}, B: ϕ28.94 {1.14} 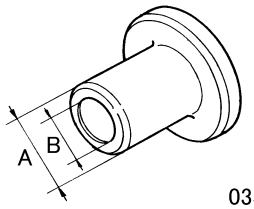 03509	MH061425	Checking diaphragm spring for installed height
ⓒc	Clutch master plate A: ϕ325 {12.8}, B: ϕ32 {1.26}, C: 9.2 {0.36}, D: "5" 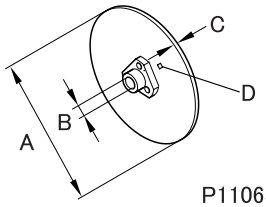 P11065	MH062291	Checking diaphragm spring for installed height

◆Removal procedure◆

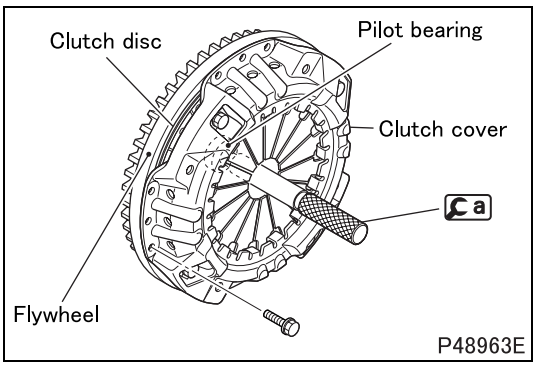

P48963E

■ **Removal: Clutch cover**

- Insert ⓒa into the flywheel pilot bearing. While supporting the clutch disc with ⓒa, remove the clutch cover.

◆Inspection procedure◆

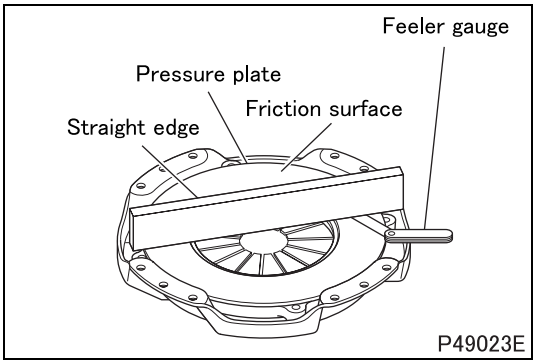

P49023E

■ **Inspection: Clutch cover**

(1) Pressure plate flatness

- Place a straight edge across the friction surface of the pressure plate. Using a feeler gauge, measure the clearance between the gauge and the surface in several locations selected randomly.
- Obtain the flatness of the pressure plate by subtracting the smallest clearance measured from the greatest clearance measured.
- If the flatness is equal to or exceeds the specified limit, replace the clutch cover.

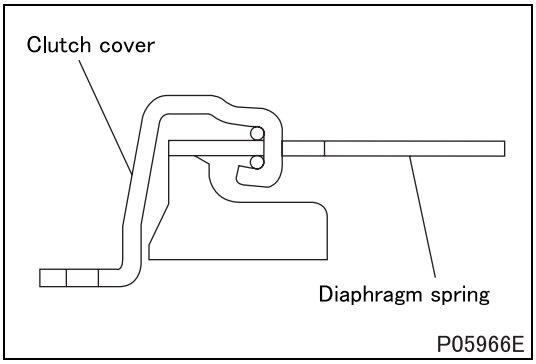

(2) Inspection of diaphragm spring

- Inspect the diaphragm spring for play.
- If the spring has play, the clutch cover needs to be replaced.

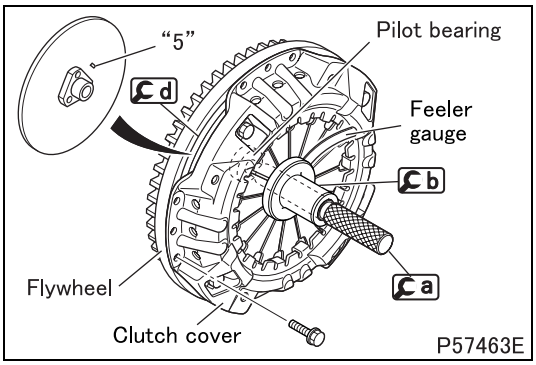

(3) Installed height of diaphragm spring

- Using a, install c (in place of the clutch disc) and the clutch cover.
- Install b and check for unevenness in height of the fingers using a feeler gauge.
- If the unevenness exceeds the limit, replace the clutch cover.

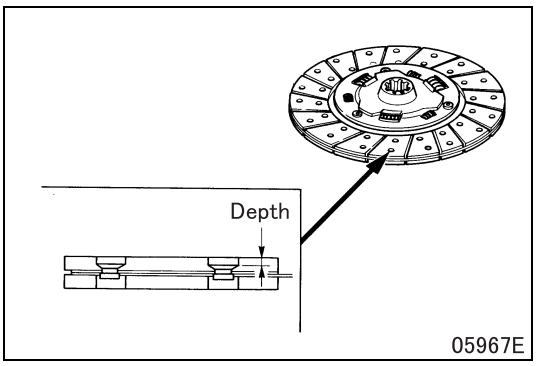

■ Inspection: Clutch disc

(1) Depth from facing surface to rivet

- Measure depth from the clutch disc facing surface to the rivet.
- If the measured value is equal to or less than the limit, replace the clutch disc.

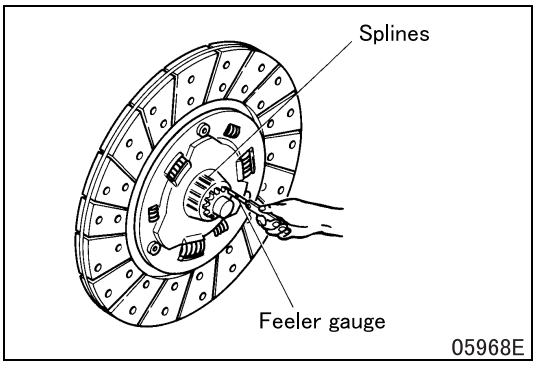

(2) Play in revolving direction in splines

- Reshape a feeler gauge such that it can be inserted into the drive pinion splines. Then, using the gauge, measure the splines for play in revolving direction.
- If the measured value is equal to or exceeds the limit, replace the faulty part.

◆Installation procedure◆

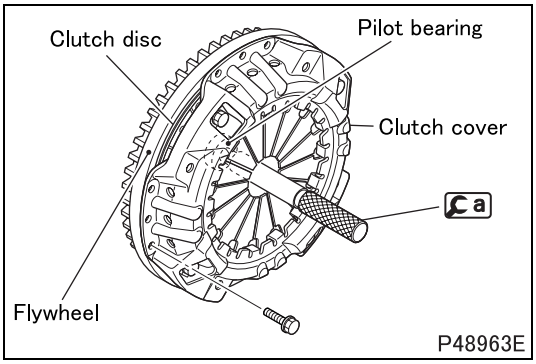

■ Installation: Clutch disc

- Insert a into the flywheel pilot bearing to support the clutch disc.
- Install the clutch cover by tightening the bolts diagonally and gradually.

M E M O

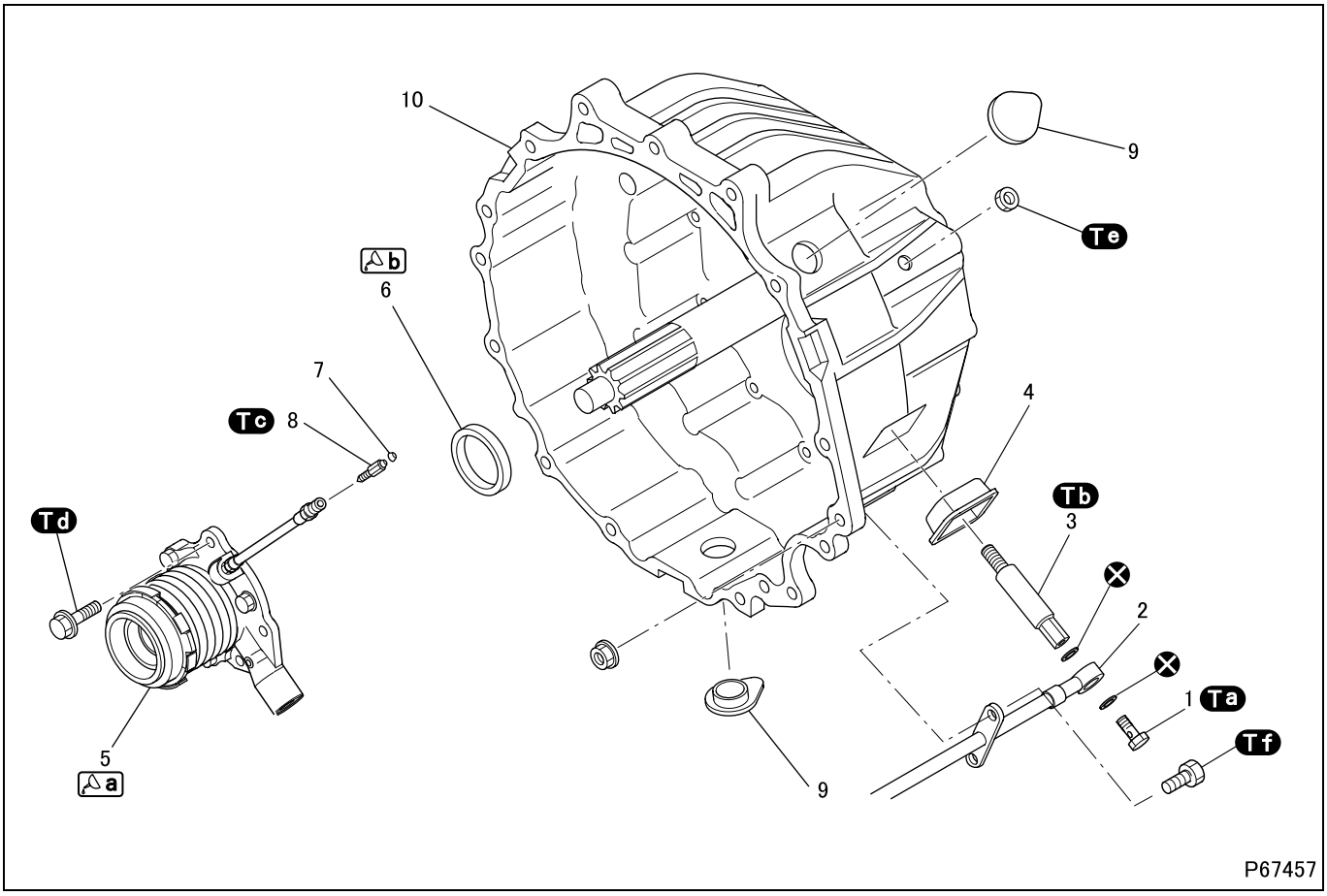

● **Removal sequence**

1 Eyebolt
2 Clutch hose
3 Connector
4 Grommet
5 Clutch direct power cylinder (See later section.)
6 Oil seal
7 Bleeder cap
8 Bleeder screw
9 Dust plug
10 Clutch housing

⊗: Non-reusable parts

CAUTION ⚠

- **When handling the clutch direct power cylinder, be careful not to smear it with mineral oil such as engine oil and transmission oil. The smeared cylinder can cause brake fluid leakage.**

● **Installation sequence**

Follow the removal sequence in reverse.

Tightening torque (Unit: N·m {ft.lbs, kgf·m})

Mark	Parts to be tightened	Tightening torque	Remarks
Ta	Eyebolt (clutch hose mounting)	20 to 25 {15 to 18, 2.0 to 2.5}	–
Tb	Connector	40 {30, 4.1}	–
Tc	Bleeder screw	6.8 to 8.8 {5.0 to 6.5, 0.7 to 0.9}	–
Td	Bolt (clutch direct power cylinder mounting)	40 {30, 4.1}	–
Te	Nut (bleeder hose mounting)	51 to 60 {37 to 43, 5.1 to 6.0}	–
Tf	Bolt (clutch hose mounting)	45 to 55 {33 to 41, 4.6 to 5.6}	–

Lubricant and/or sealant

Mark	Points of application	Specified lubricant and/or sealant	Quantity
a	Clutch direct power cylinder mating face with clutch housing	ThreeBond 1215	As required
b	Oil seal lips	Wheel bearing grease [NLGI No. 2 (Li soap)]	As required

Special tools (Unit: mm {in.})

Mark	Tool name and shape	Part No.	Application
a	Oil seal guide A: ϕ36.5 {1.44} 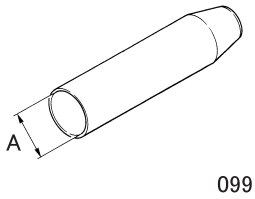 09918	MH063322	Protecting oil seal during clutch direct power cylinder installation
b	Oil seal installer A: ϕ89 {3.50} 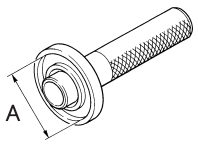 09917	MH062714	Oil seal installation

◆Installation procedure◆

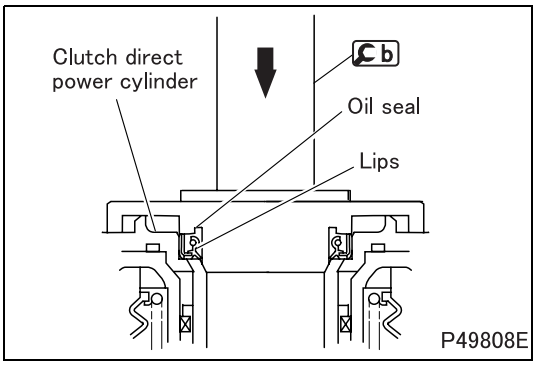

■ Installation: Oil seal

- Apply grease onto the oil seal lips. Then, install the oil seal onto the clutch direct power cylinder making sure that the seal faces as shown in the drawing.

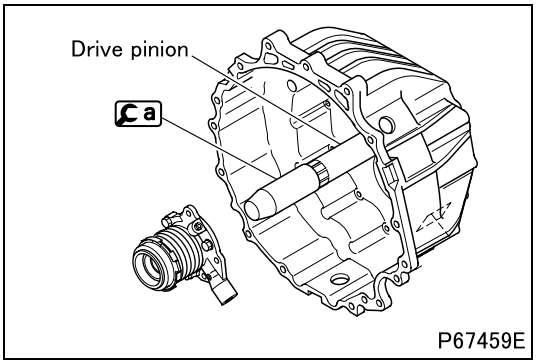

■ Installation: Clutch direct power cylinder

- After cleaning the sealant application surfaces, apply sealant as required.
- Install a onto the drive pinion to protect the oil seal previously installed onto the clutch direct power cylinder.

Clutch Direct Power Cylinder

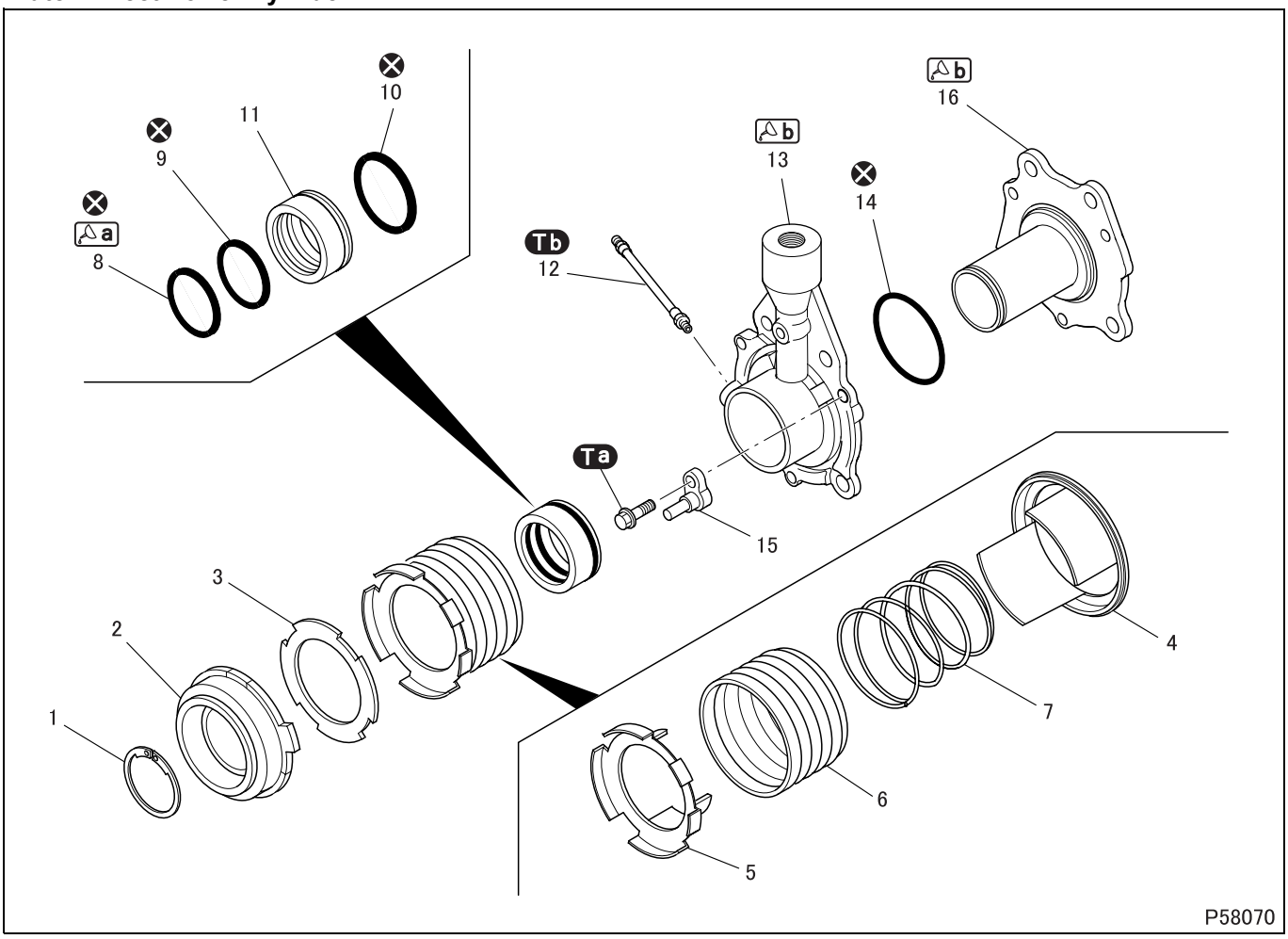

● **Disassembly sequence**

1 Snap ring
2 Release bearing
3 Oil seal
4 Rear spring stopper
5 Front spring stopper
6 Boots
7 Spring
8 Front inner cup
9 Rear inner cup
10 Outer cup
11 Piston
12 Bleeder hose
13 Cylinder body A
14 O-ring
15 Rod
16 Cylinder body B

⊗: Non-reusable parts

CAUTION ⚠

- **Remove the bleeder only when cylinder body A is being replaced. Because removing the bleeder may cause the thread deformation of the cylinder body A. Therefore you must replace the cylinder body A when removing the bleeder once. Reusing the body causes oil leak.**

● **Assembly sequence**

Follow the disassembly sequence in reverse.

CAUTION ⚠

- **Install the piston correctly: It needs to be faced as shown in the drawing, and the cups should not be dislodged. An incorrectly installed piston causes brake fluid leakage and clutch drag.**

Tightening torque (Unit: N·m {ft.lbs, kgf·m})

Mark	Parts to be tightened	Tightening torque	Remarks
Ta	Bolt (mounting of cylinder bodies A, B and rod)	6.9 to 8.8 {5.1 to 6.5, 0.7 to 0.9}	–
Tb	Bleeder hose	16 to 18 {12 to 13, 1.6 to 1.8}	–

Lubricant and/or sealant

Mark	Points of application	Specified lubricant and/or sealant	Quantity
a	Front inner cup sliding face with cylinder body B	COSMO Rubber Grease	0.1 to 0.2 g {0.0035 to 0.0071 oz.}
b	Cylinder body A sliding face	Metal rubber #20 (rust preventive oil)	As required
	Cylinder body B sliding face		

◆Removal procedure◆

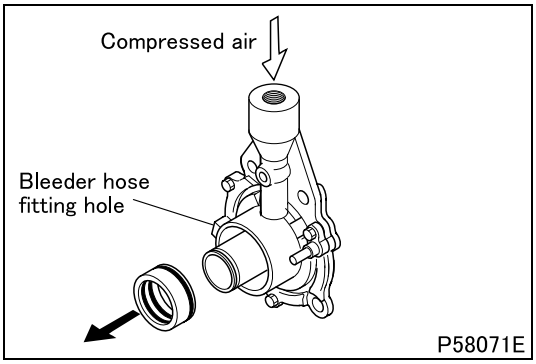

■ Removal: Piston

- With the bleeder hose fitting hole of cylinder body A blocked, feed compressed air gradually starting from 0 kPa {0 psi, 0 kgf/cm^2} to remove the piston.

WARNING ⚠

- **Do not apply compressed air suddenly at high pressure, or the piston will fly out with full force.**

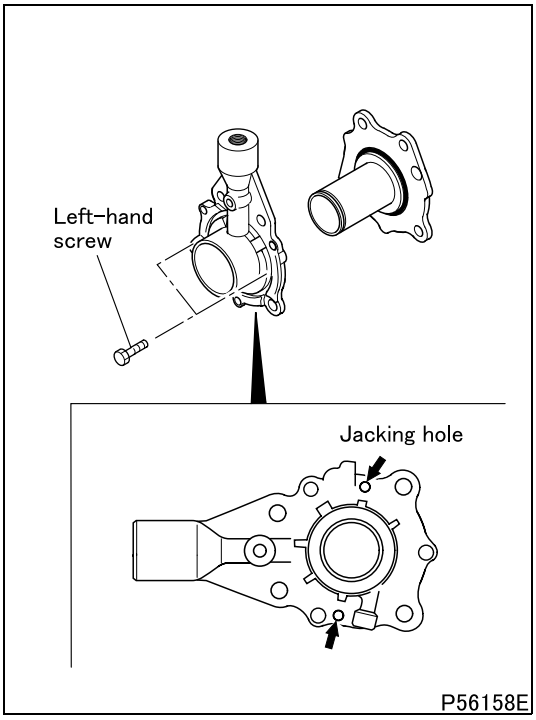

■ Removal: Cylinder body A

- Install left-hand screws (M8 × 1.25 mm) evenly into the jacking holes on cylinder body A and remove the body.

◆Installation procedure◆

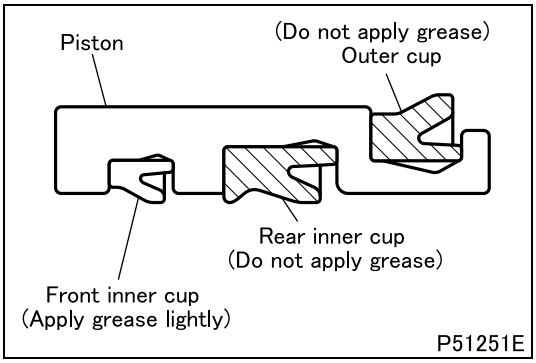

■ Installation: Front inner cup, rear inner cup and outer cup

- Install the front inner cup, rear inner cup, and outer cup onto the piston, facing them in the illustrated directions.

CAUTION ⚠

- **Install the front inner cup, rear inner cup, and outer cup correctly, facing them in the illustrated directions. Incorrectly installed cups cause brake fluid leakage and clutch drag.**
- **Do not apply grease onto the rear inner cup or the outer cup. Otherwise, brake fluid will leak.**
- **Apply only a thin coat of grease to the front inner cup. Greasing it too much can cause brake fluid leakage.**

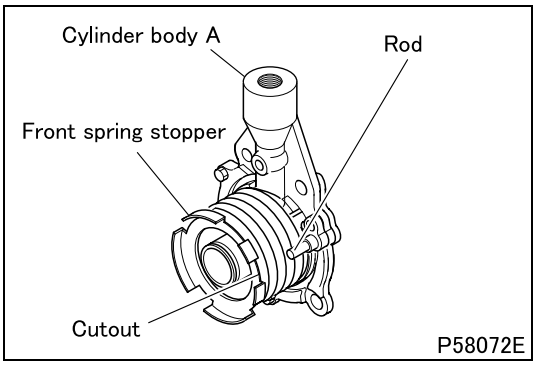

■ Installation: Front spring stopper

- Install the front spring stopper onto cylinder body A such that its cutout aligns with the rod on the body and that it faces in the illustrated direction.

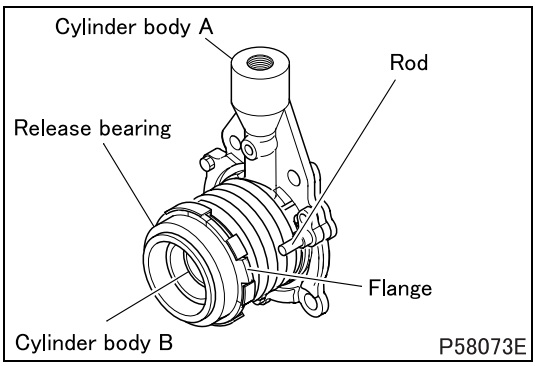

■ Installation: Release bearing

- Install the release bearing onto cylinder body B such that its flange aligns with the rod on cylinder body A and that it faces in the illustrated direction.

Group 22

Manual Transmission

Table of Contents

Back

Home

MITSUBISHI FUSO TRUCK OF AMERICA, Inc.

Pub.No.TWSE0713-22

INDEX

SPECIFICATIONS 22-2

STRUCTURE AND OPERATION
1. Transmission 22-4
2. Synchromesh Mechanism 22-6
3. Interlock Mechanism 22-9
4. Speedometer Gear Bushing 22-9

TROUBLESHOOTING 22-10

ON-VEHICLE INSPECTION AND ADJUSTMENT
1. Inspection of Transmission Oil Leak 22-12
2. Inspection of Looseness in Transmission Mounting Bolts 22-12
3. Inspection of Play in Companion Flange and Looseness in Lock Nut 22-13
4. Inspection and Replacement of Transmission Oil 22-13

REMOVAL AND INSTALLATION OF TRANSMISSION 22-16

GEAR SHIFTER UPPER 22-20

REAR COVER <S5> AND PARKING BRAKE 22-26

EXTENSION HOUSING <S6> AND PARKING BRAKE 22-30

REVERSE IDLER GEAR 22-36

6TH GEAR <S6> 22-40

TRANSMISSION BODY 22-46

DRIVE PINION 22-62

MAINSHAFT 22-64

COUNTERSHAFT 22-74

TRANSMISSION CONTROL 22-76

BEARING PULLER AND INSTALLER 22-80

SPECIFICATIONS

Item			Specifications	
Mode of control			Instrument panel shift remote control	
Transmission model			M036S5 (5.175/0.715)	M036S6 (5.175/0.669)
Gear ratio		1st	5.175	5.175
		2nd	2.913	2.913
		3rd	1.682	1.682
		4th	1.000	1.000
		5th	0.715	0.793
		6th	–	0.669
		Rev	5.175	5.175
Transmission oil	Gear oil		General: API GL-3 SAE80 Warm region: API GL-3 SAE90 Tropical region: API GL-4 SAE90	
	Engine oil		Vehicle operated continuously at high speed API CC SAE30 or SAE40	
	Quantity	L {qts.}	3.6 {3.8}	4.4 {4.6}
Mass		kg {lb}	89 {195}	101 {220}

M E M O

1. Transmission

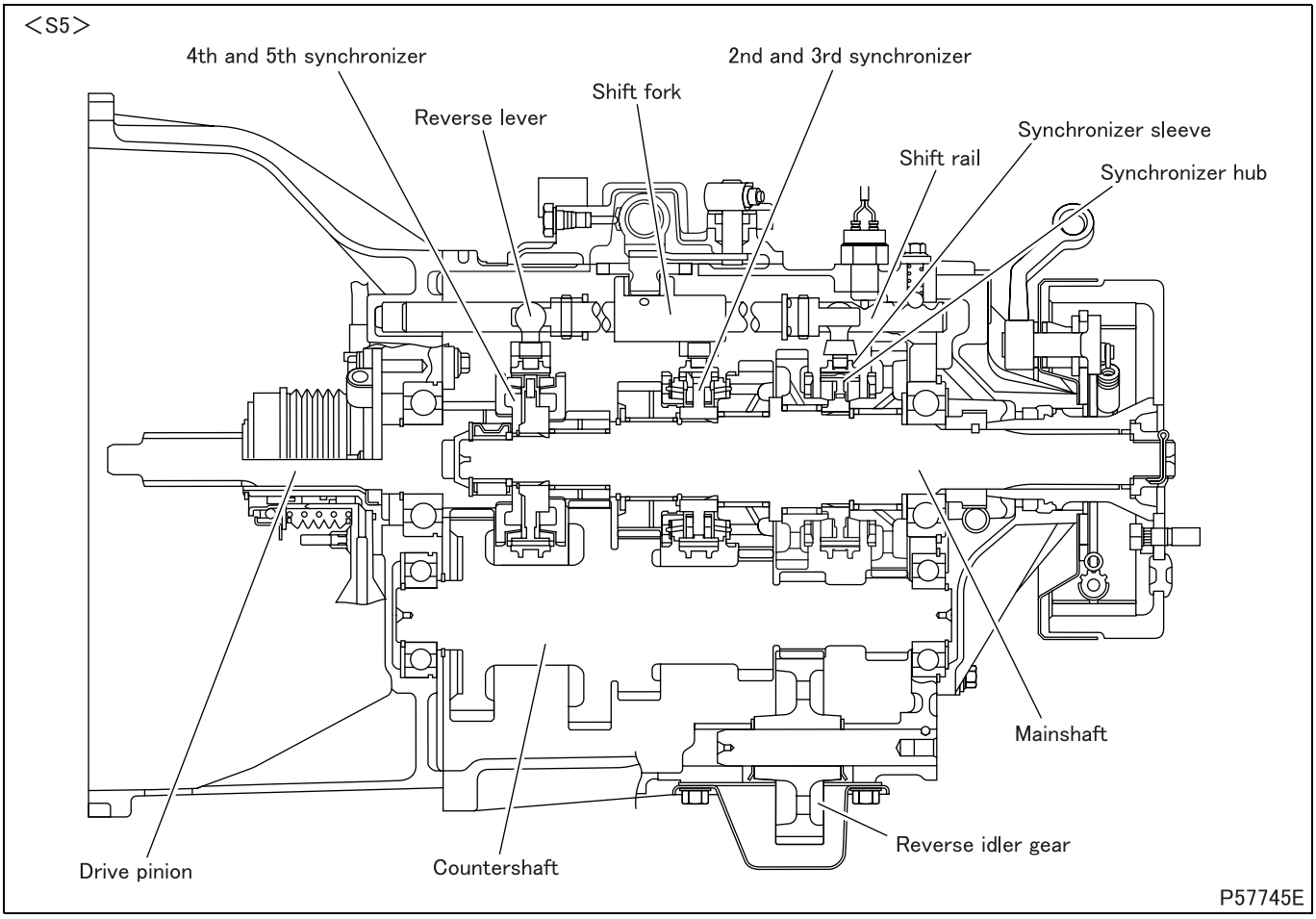

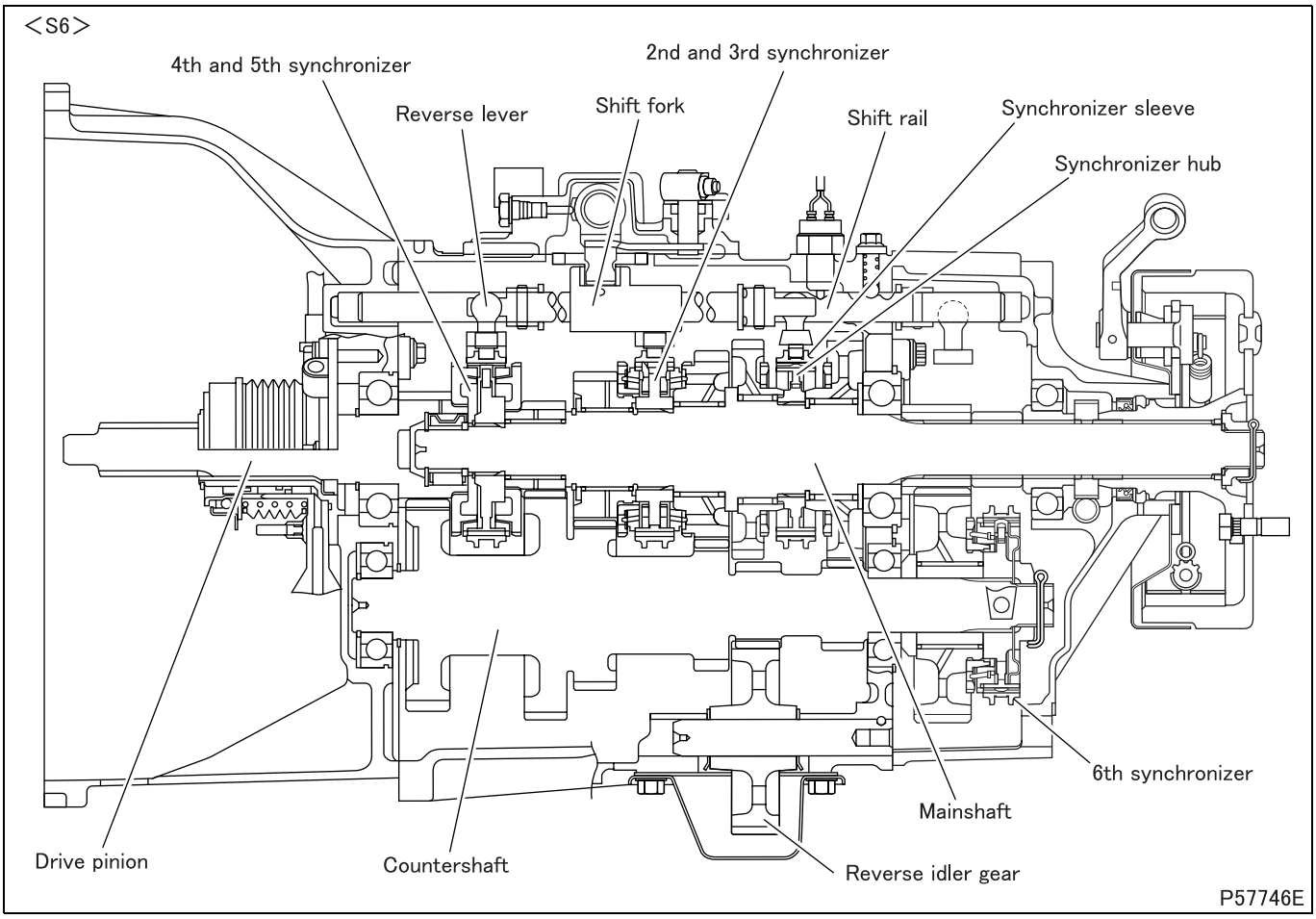

- The transmission changes revolution and torque generated by the engine into those that match the vehicle's power requirement (driving force). The power requirement (driving force) is increased or decreased by making a selection from several sets of engaged gears.
- The transmission uses an interlock mechanism to avoid double engagement.

2. Synchromesh Mechanism

- The synchromesh mechanism, when a shift change is made, synchronizes the rotation speed of the mainshaft, drive pinion and synchronizer hub that rotates integrally with the mainshaft with the rotation speed of the gear to be shifted.
- This vehicle has two synchromesh mechanisms, a warner synchromesh type and a lever synchromesh type. The Warner synchromesh type or the lever synchromesh type is used depending on the gear position as shown below:

Synchromesh type \ Transmission type		M036S5	M036S6
Warner synchromesh type	Single cone type	4th, 5th	4th, 5th
	Triple cone type	–	6th
Lever synchromesh type	Triple cone type	2nd, 3rd	2nd, 3rd

2.1 Warner synchromesh type

(1) Single cone type

The following descriptions are for 4th gear of 4th and 5th synchronizer assembly.

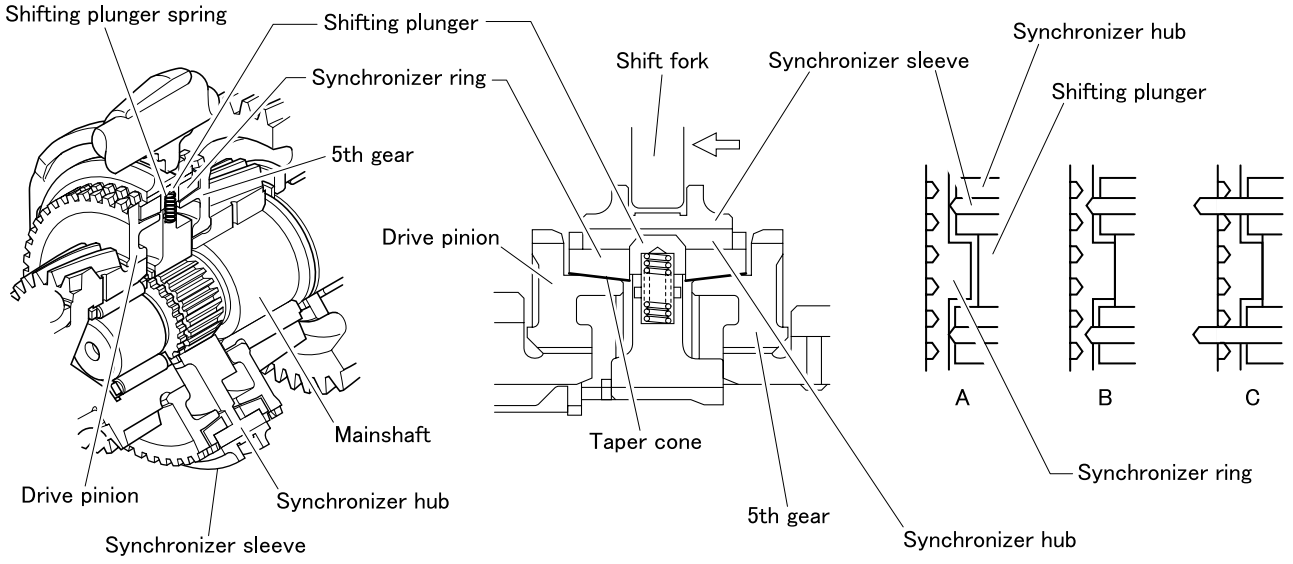

- The inside of the synchronizer hub engages the spline of the mainshaft and rotates with it. The outside of the synchronizer hub has a spline that engages the synchronizer sleeve and three grooves.
- Shifting plungers are inserted into these grooves. When the gear shift is in neutral, the shifting plungers engage grooves in the synchronizer sleeve and are pressed against the inside of the synchronizer sleeve by shifting plunger springs.
- Synchronizer rings are inserted into the respective taper cone of each gear.
- The outer splines of the synchronizer rings engage the synchronizer sleeve. On the synchronizer hub are three grooves in which protrusions of the synchronizer rings are inserted. These grooves are wider than the width of protrusions of the synchronizer rings.
- Synchronizer rings rotate relative to the synchronizer sleeve by the amount of play.
- When the gear shift is in neutral (Figure A), moving the shift fork in the direction of the arrow as illustrated, moves the synchronizer sleeve slightly to the pinion drive. At the same time, the shifting plunger, the central protrusion of which engages the synchronizer sleeve, moves to the drive pinion and presses the synchronizer ring against the taper cone of the drive pinion (Figure B).
- The taper cones of synchronizer rings, which act as cone clutches, generate friction torque and perform synchronous operation.

- The rotation speed of the synchronizer hub becomes gradually closer to that of the drive pinion gear due to the synchronous operation, and eventually they rotate at the same speed. This allows the synchronizer sleeve to move smoothly to engage the synchronizer hub and gear, completing the shift change (Figure C).

(2) Triple cone type

The following descriptions are for 6th gear of 6th synchronizer assembly.

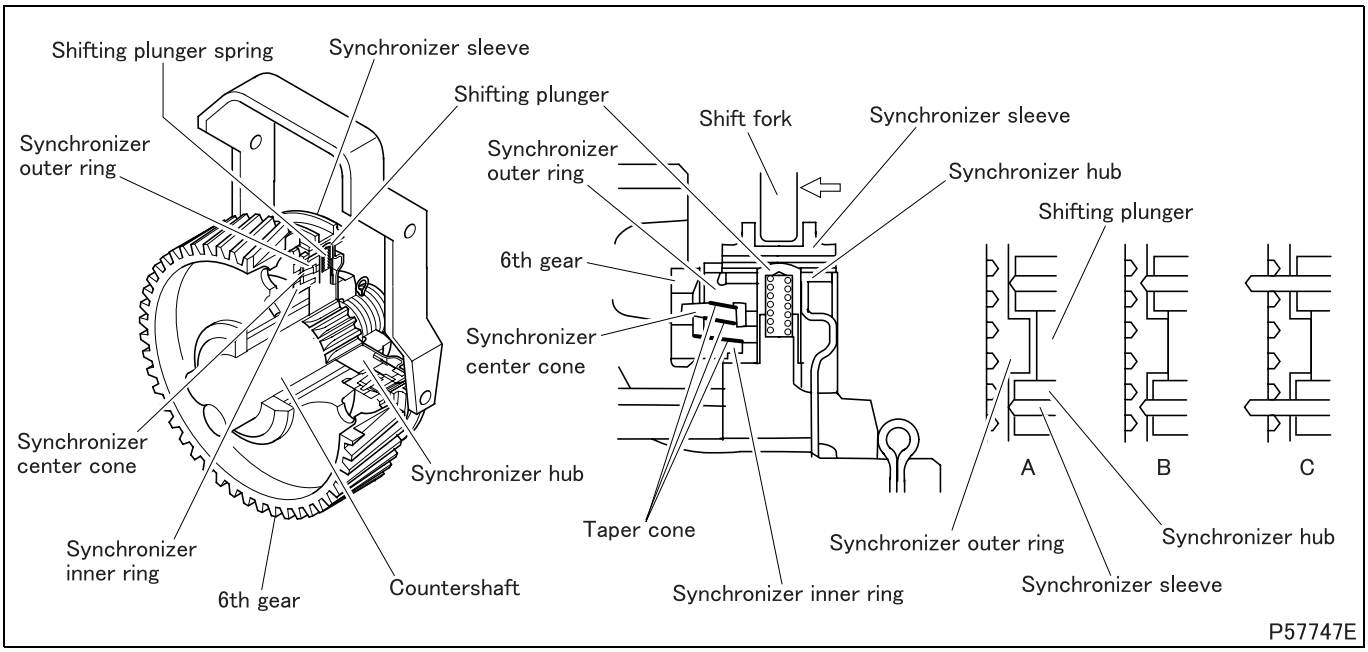

- The synchromesh structure and operation of the triple cone type are basically the same as for the single cone type. The synchronizer ring is divided into three parts (synchronizer inner ring, synchronizer center cone and synchronizer outer ring) and the center cone (both the inside and outside surfaces are tapered) and the inner ring (both the inside and outside surfaces are tapered) are sandwiched between the outer ring and the taper cone of each gear to shorten the time required for synchronization with cone clutches at three locations.
- Six protrusions on the outside of the synchronizer center cone fit into corresponding gear holes. As in the taper cone of the single cone type, the center cone and the gear are installed as if integrated.
- The inside of the synchronizer hub engages the spline of the mainshaft and rotates with it. The outside of the synchronizer hub has a spline that engages the synchronizer sleeve and three grooves.
- Shifting plungers are inserted into these keyways. When the gear shift is in neutral, the shifting plungers engage grooves in the synchronizer sleeve and are pressed against the inside of the synchronizer sleeve by shifting plunger springs.
- The synchronizer outer ring and synchronizer inner ring are inserted into synchronizer center cones, respectively.
- The outer spline of the synchronizer outer ring engages the synchronizer sleeve. On the synchronizer hub are three grooves in which protrusions of the synchronizer outer ring are inserted. These grooves are wider than the width of protrusions of the synchronizer outer ring.
- The synchronizer outer ring rotates relative to the synchronizer sleeve by the amount of play.
- When the gear shift is in neutral (Figure A), moving the shift fork in the direction of the arrow as illustrated, moves the synchronizer sleeve slightly to the 6th gear. At the same time, the shifting plunger, the central protrusion of which engages the synchronizer sleeve, moves to the 6th gear and presses the synchronizer outer ring and the center cone against the taper cone of the synchronizer center cone and the synchronizer inner ring, respectively and in addition, presses the inner ring against the 6th gear (Figure B).
- The taper cones of synchronizer rings, which act as cone clutches, generate friction torque and perform synchronous operation.
- The rotation speed of the synchronizer hub becomes gradually closer to that of the gear of the 6th gear due to the synchronous operation, and eventually they rotate at the same speed. This allows the synchronizer sleeve to move smoothly to engage the synchronizer hub and gear, completing the shift change (Figure C).

2.2 Lever synchromesh type

The following descriptions are for 2nd gear of 2nd and 3rd synchronizer assembly.

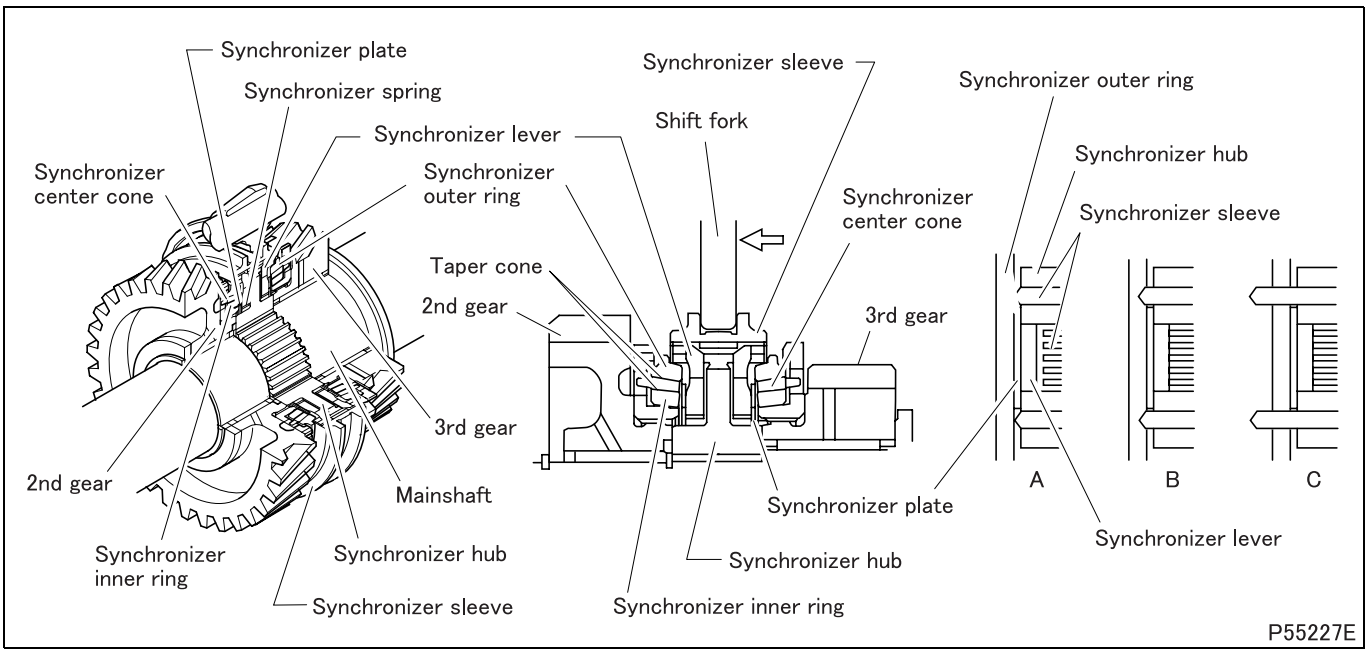

- The synchronizer ring consists of three elements (synchronizer inner ring, synchronizer center cone and synchronizer outer ring). When a gear is selected, the center cone (having taper cone surfaces on both inner and outer surfaces) and the inner ring (having taper cone surfaces on both inner and outer surfaces) are sandwiched between the outer ring and the taper cone portion of the gear. Since cone clutch actions occur at three places, the mechanism can complete synchronization in a short time.
- Six protrusions on the outside of the synchronizer center cone fit into corresponding gear holes. As in the taper cone of the single cone type, the center cone and the gear are installed as if integrated.
- The inside of the synchronizer hub engages the spline of the mainshaft and rotates with it. The outside of the synchronizer hub has a spline that engages the synchronizer sleeve and four grooves.
- Two arc-shaped synchronizer levers are inserted between the synchronizer outer ring and synchronizer hub, and synchronizer sleeve to double the force pushing the outer ring of the sleeve, shortening the time required for synchronization.
- The synchronizer outer ring and synchronizer inner ring are inserted into synchronizer center cones, respectively.
- When the gear shift is in neutral (Figure A), moving the shift fork in the direction of the arrow as illustrated moves the synchronizer sleeve slightly to the 2nd gear. At the same time, because the synchronizer lever top faces the inside slant of the synchronizer sleeve, the sleeve pushes the lever top toward the 2nd gear on this slant as well as it pushes the lever inside the radius direction (Figure B).
- The two synchronizer levers, whose forces are doubled by leverage with the synchronizer hub as the fulcrum, push the synchronizer outer ring toward the 2nd gear, and press it against the taper cone of the synchronizer center cone, the center cone against the synchronizer inner ring, and in addition the inner ring against the 2nd gear. The levers are constantly expanded outside the radius direction by the synchronizer springs.
- The taper cones of synchronizer rings, which act as cone clutches, generate friction torque and perform synchronous operation.
- The synchronizer outer ring has protrusions at two locations. These protrusions are sandwiched by the two synchronizer levers, restricting rotation of the synchronizer outer ring. Therefore, the synchronizer outer ring expands the levers outward by friction torque.
- The synchronizer sleeve can’t move unless it pushes in the synchronizer levers. Therefore, while friction torque acts on the synchronizer outer ring, the protrusions of the synchronizer outer ring expand the levers, and the sleeve can’t move and keep pressing the synchronizer outer ring.

- The rotation speed of the synchronizer hub becomes gradually closer to that of the gear of the 2nd gear due to the synchronous operation, and eventually they rotate at the same speed. This allows the synchronizer sleeve to push in the synchronizer levers on the inside slant and to move smoothly while turning the synchronizer outer ring to engage the synchronizer hub and gear, completing the shift change (Figure C).

3. Interlock Mechanism

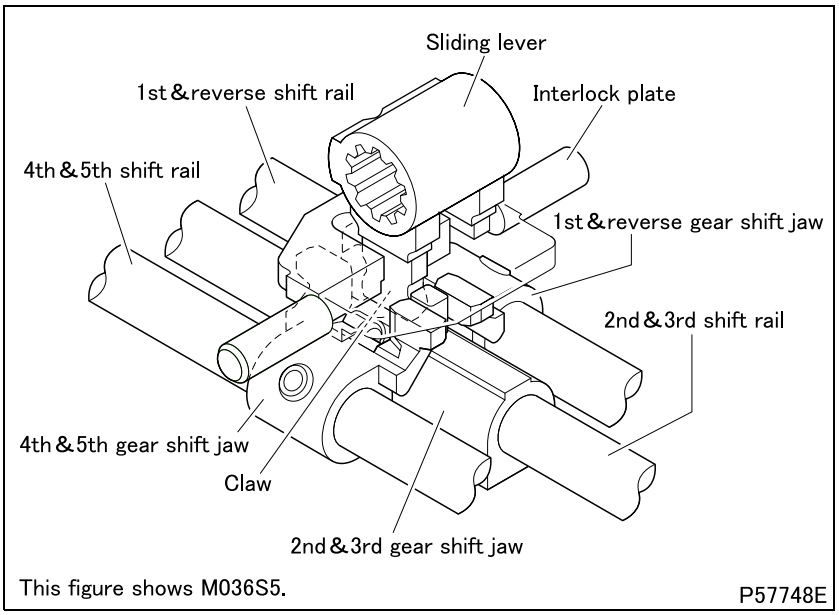

- The interlock mechanism prevents double engagement of gears.
- When the 2nd and 3rd shift rail is shifted, the finger of the gear shift sliding lever engages with the 2nd & 3rd gear shift jaw, and the rail on the bottom surface of the interlock plate locks the other gear shift jaws.

4. Speedometer Gear Bushing

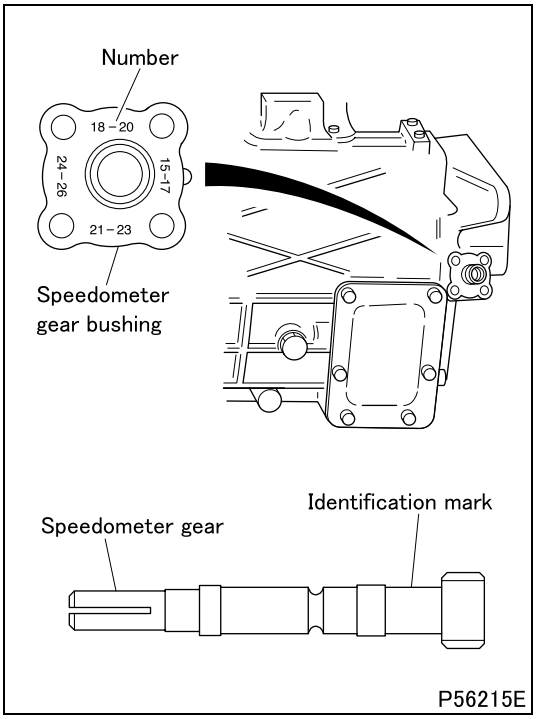

- The speedometer gear bushing is eccentric, and displacing the installed position allows it to correspond to the different number of tooth of the speedometer gear.
- The numbers marked on the front at four locations show the range of the number of tooth of the corresponding speedometer gear.
  "15-17": Number of tooth 15 to 17
- An identification mark showing the number of tooth is marked on the speedometer gear.

Identification mark	A	B	C	D	L	E
Number of tooth	15	16	17	18	19	20
Gear ratio	3.0	3.2	3.4	3.6	3.8	4.0

Possible causes \ Symptoms		Gears slip out of engagement	Gears hard to engage	Noise when engine is idling	Noise when cruising	Noise when changing gear	Reference Gr
Transmission body faulty	Mainshaft rear lock nut loose	O	O				
	Mainshaft thrust washer worn	O	O				
	Mainshaft bearing worn or damaged	O	O				
	Synchronizer ring and synchronizer sleeve spline worn	O					
	Synchronizer ring and gears taper cone area worn		O				
	Mainshaft pilot bearing worn or damaged			O	O		
	Drive pinion bearing worn or damaged			O			
	Countershaft bearing worn or damaged			O			
	Needle bearings of gears worn or damaged			O	O		
	Mainshaft and countershaft gears worn or damaged				O		
	Mainshaft and countershaft gears backlash excessive				O		
	Spline of gears worn					O	
	Gears damaged				O		
	Transmission oil insufficient				O		
Control mecha-nisms faulty	Control cable adjustment faulty		O				
	Control cable routing inadequate		O				
	Control cable length inadequate		O				
	Bushings worn	O	O				
	Steel ball and groove of shift rail worn	O					
	Poppet spring of shift rail fatigued or damaged	O					
	Shift rail sliding movement faulty		O				
	Shift fork claw worn		O				
	Shift fork bent		O				

Possible causes \ Symptoms				Gears slip out of engagement	Gears hard to engage	Noise when engine is idling	Noise when cruising	Noise when changing gear	Reference Gr
Clutch faulty	Clutch disengagement faulty				O			O	Gr21
	Clutch pedal play faulty				O				
Synchronizer faulty	Warner synchromesh type	Single cone type	Contacting surface of synchronizer ring and gear taper cone worn		O			O	
		Triple cone type	Contacting surface of synchronizer inner and outer rings and center cone worn		O			O	
			Contacting surface of synchronizer inner ring and gear taper cone worn		O			O	
	Lever synchromesh type		Synchronizer lever worn or damaged		O			O	
			Contacting surface of synchronizer inner and outer rings and center cone worn		O			O	
			Contacting surface of synchronizer inner ring and gear taper cone worn		O			O	
	Synchronizer ring spline chamfer worn <Warner synchromesh type>							O	
	Shifting plunger worn <Warner synchromesh type>							O	
	Shifting plunger spring deteriorated or damaged <Warner synchromesh type>							O	
	Synchronizer spring deteriorated or damaged <Lever synchromesh type>							O	
	Synchronizer sleeve worn or damaged						O	O	

ON-VEHICLE INSPECTION AND ADJUSTMENT

1. Inspection of Transmission Oil Leak

1.1 Inspection of oil leak in transmission body

- Make sure that there is not oil leak in the transmission body by watching.
- When there is oil leak, replace the defective parts.

1.2 Inspection of oil leak around transmission mounting part

- Make sure that there is not oil adhesion caused by oil leak from engine etc. around transmission mounting part (around the mating surface of clutch housing).
- When there is oil adhesion, transmission mounting bolts may be loosened. Therefore remove the transmission and clean the mating surface of flywheel housing and clutch housing using brake cleaner after repairing the oil leak part.
  (See “REMOVAL AND INSTALLATION OF TRANSMISSION”.)

2. Inspection of Looseness in Transmission Mounting Bolts

Tightening torque (Unit: N·m {ft.lbs, kgf·m})

Mark	Parts to be tightened	Tightening torque	Remarks
–	Bolt A (transmission mounting)	47.1 {35, 4.8}	M10
	Bolt B (transmission mounting)	82.4 {61, 8.4}	M12

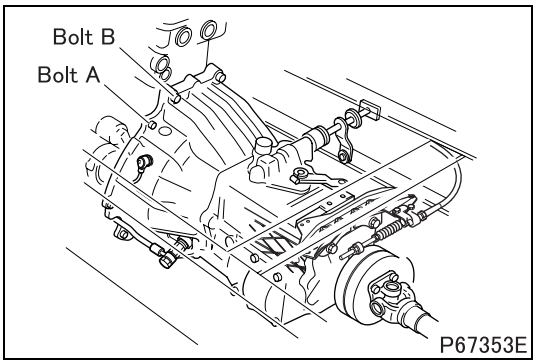

- Check the transmission mounting bolts for looseness.
- Retighten any loose bolt to the specified torque.

3. Inspection of Play in Companion Flange and Looseness in Lock Nut

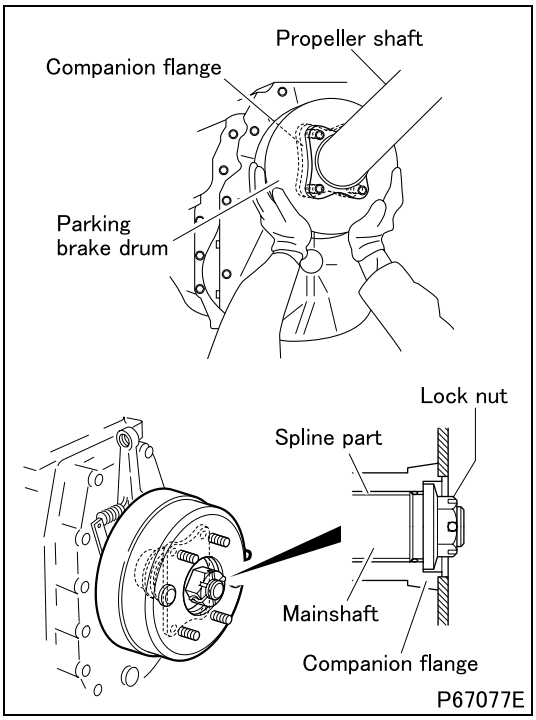

- Move the parking brake drum in axial and vertical directions to check for excessive play between the companion flange and main shaft.
- If excessive play is detected, remove the propeller shaft, then check the lock nut for looseness and the splines on companion flange and main shaft for abnormalities. If any part is found defective, replace the part. (See “REAR COVER <S5> AND PARKING BRAKE” or “EXTENSION HOUSING <S6> AND PARKING BRAKE” section.)

4. Inspection and Replacement of Transmission Oil

Tightening torque (Unit: N·m {ft.lbs, kgf·m})

Mark	Parts to be tightened	Tightening torque	Remarks
–	Inspection plug	68.6 ± 14.7 {51 ± 11, 7.0 ± 1.5}	–
	Drain plug		

Lubricant and/or sealant

Mark	Points of application		Specified lubricant and/or sealant	Quantity
–	Thread area of inspection plug		ThreeBond 1105	As required
	Thread area of drain plug			
–	Transmission case and extension housing	M036S5	Gear oil General: API GL-3 SAE80 Warm region: API GL-3 SAE90 Tropical region: API GL-4 SAE90	3.6 L {3.8 qts.}
		M036S6	Engine oil Vehicle operated continuously at high-speed: API CC SAE30 or SAE40	4.4 L {4.6 qts.}

WARNING ⚠

- **Temperature of transmission oil is high immediately after driving. Perform work when oil is cold.**

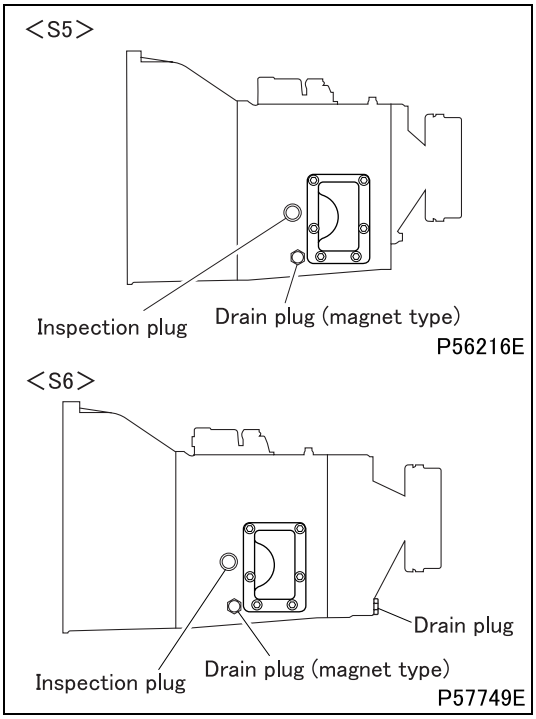

[Inspection]

(1) Inspection of oil quantity

- Remove the inspection plug, and check that oil is filled up to the neck.
- If oil is not sufficient, fill oil from the inspection plug hole up to the neck.
- After filling, apply sealant to the inspection plug and tighten it to the specified torque.

(2) Inspection of oil quality and inclusions

- When draining transmission oil, check for oil quality, metal chips and metal powder.
- If an abnormally large amount of metal chips and metal powder is found, disassemble the transmission assembly for service, as abnormalities may be caused inside.

[Replacement]

- Remove the drain plug to drain transmission oil. Drainage can be made quickly with the inspection plug removed.
- After draining transmission oil, apply sealant to the drain plug and tighten it to the specified torque. In case of the drain plug of magnet type, clean it before installation.
- Fill transmission oil of the specified quantity from the inspection plug hole.
- After filling, check that oil is filled up to the neck. If oil is not sufficient, replenish it.
- After completing work, apply sealant to the inspection plug and tighten it to the specified torque.

M E M O

REMOVAL AND INSTALLATION OF TRANSMISSION

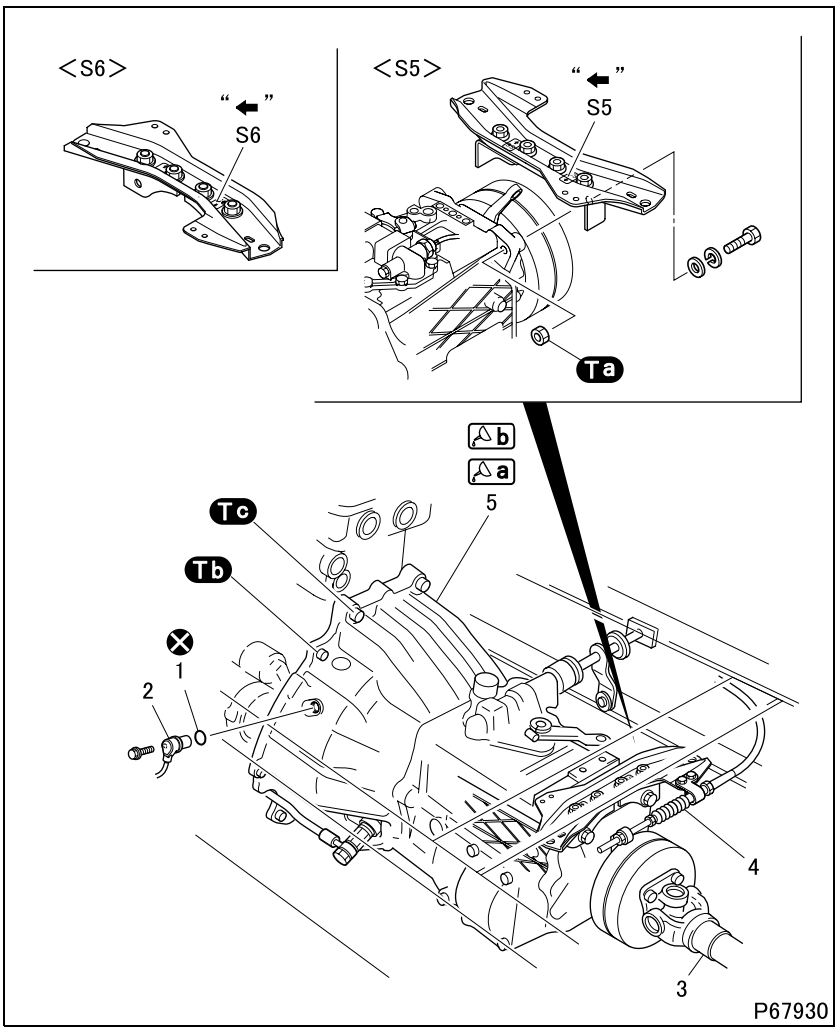

● **Removal sequence**

1 O-ring
2 Engine speed sensor
3 Propeller shaft
4 Parking brake cable
5 Transmission

● **Installation sequence**

Follow the removal sequence in reverse.

Tightening torque (Unit: N·m {ft.lbs, kgf·m})

Mark	Parts to be tightened	Tightening torque	Remarks
Ta	Nut (transmission mounting)	130 to 180 {96 to 130, 13 to 18}	–
Tb	Bolt (transmission mounting)	47.1 {35, 4.8}	M10
Tc	Bolt (transmission mounting)	82.4 {61, 8.4}	M12

Lubricant and/or sealant

Mark	Points of application	Specified lubricant and/or sealant	Quantity
a	Drive pinion spline	Molybdenum disulfide grease [NLGI No. 2 (Li soap)]	As required
b	Engine mounting surface of clutch housing	ThreeBond 1215	As required

◆Removal procedure◆

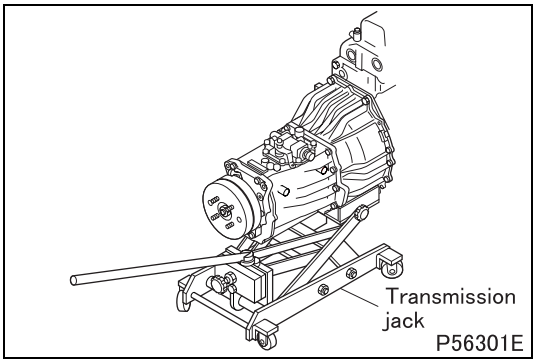

■ **Removal: Transmission**

- Support the transmission on the transmission jack and remove transmission mounting bolts.

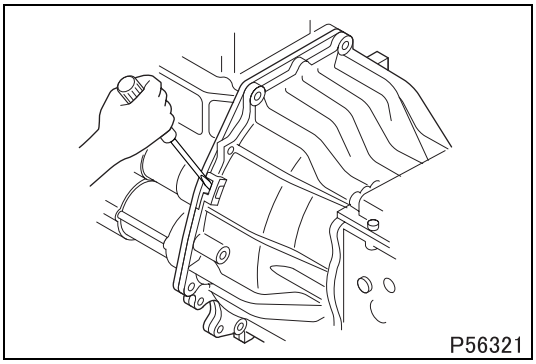

- Insert a screwdriver into the three removal grooves and remove the transmission from the engine.
- Move the transmission backward until the spline of the drive pinion is detached from the clutch.

CAUTION ⚠

- **Make sure that you pull the transmission out in a straight line. If you seesaw the transmission violently, you will damage the spline that connects the drive pinion and the clutch.**

◆Installation procedure◆

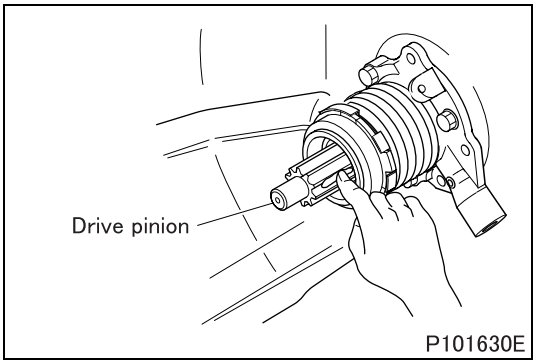

■ **Installation: Transmission**

- Check the spline of the drive pinion for rust.
- If rust is found, remove it using a wire brush.
- Rub grease evenly onto the clutch disc sliding surface of the drive pinion using your hand.

CAUTION ⚠

- **Make sure that you apply only the necessary amount of grease because too much grease would drip and cause clutch slip.**

- Apply sealant following Manners shown below.

CAUTION ⚠

- **Take care not to apply sealant like the following condition. Otherwise it causes water infiltration.**
  - **There is dust, oil, grease, etc. on the mating surface.**
  - **The diameter or thickness of the applied sealant is extremely different at each part.**
  - **The applied sealant has some breaks.**
  - **The applied sealant covers the bleeding hole of the clutch housing and engine parts.**

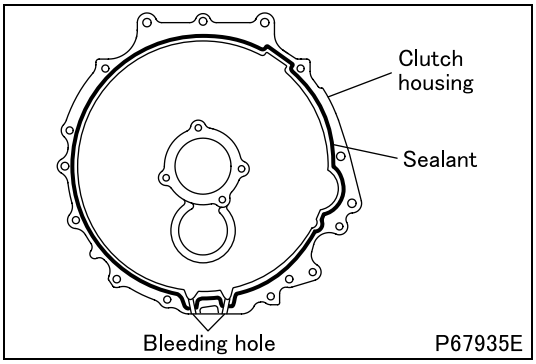

<Case of using nozzle gun>

- Clean the mating surfaces of each part.
- Apply sealant on the width center of the mating surfaces so that the diameter of the applied sealant is the same as the diameter of the nozzle. The line of applying sealant is illustrated.

<Case of using spatula, etc.>

- Clean the mating surfaces of each part.
- Apply sealant evenly on the entire mating surfaces.

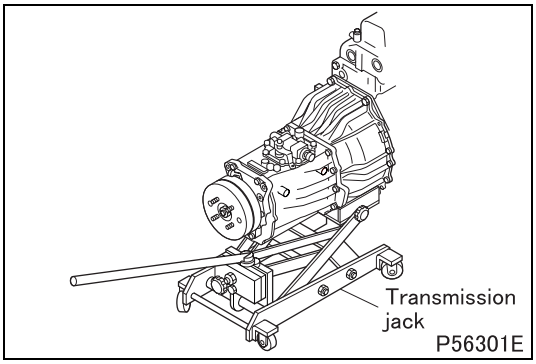

- Support the transmission on the transmission jack, and insert the transmission into the pilot bearing of the flywheel paying attention to the drive pinion spline.
- Tighten transmission mounting bolts to the specified torque.

M E M O

GEAR SHIFTER UPPER

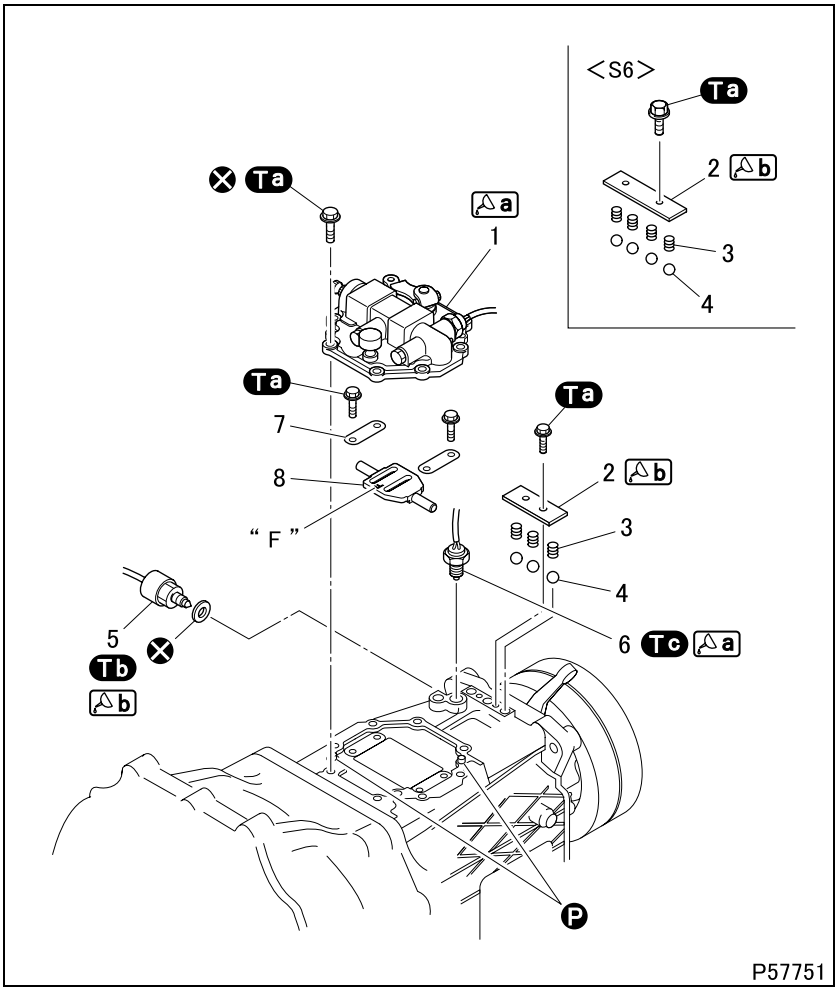

● **Removal sequence**

1. Gear shifter upper (See later section.)
2. Poppet spring plate
3. Poppet spring
4. Steel ball
5. Backup lamp switch
6. Torque limit switch
7. Plate
8. Interlock plate

Ⓟ: Locating pin
⊗: Non-reusable parts

● **Installation sequence**

Follow the removal sequence in reverse.

Service standards (Unit: mm {in.})

Location	Maintenance item	Standard value	Limit	Remedy
3	Poppet spring installed load (installed length 21.7 {0.85})	61.2 N {14 lbs, 6.2 kgf}	43 N {9.7 lbs, 4.4 kgf}	Replace

Tightening torque (Unit: N·m {ft.lbs, kgf·m})

Mark	Parts to be tightened	Tightening torque	Remarks
Ta	Bolt (gear shifter upper mounting)	23.5 {17, 2.4}	–
	Bolt (poppet spring plate mounting)		
	Bolt (plate mounting)		
Tb	Backup lamp switch	29.4 to 39.2 {22 to 29, 3 to 4}	–
Tc	Torque limit switch	49 ± 2.9 {36 ± 2.1, 5 ± 0.3}	–

Lubricant and/or sealant

Mark	Points of application	Specified lubricant and/or sealant	Quantity
a	Mating surface of gear shifter upper and transmission case	ThreeBond 1104	As required
	Thread area of torque limit switch		
b	Mating surface of poppet spring plate and transmission case	ThreeBond 1215	As required
	Thread area of backup lamp switch		

■ **Installation: Gear shifter upper**

- Apply sealant following Manners shown below.

CAUTION ⚠

- **Take care not to apply sealant like the following condition. Otherwise it causes oil leak.**
  - **There is dust, oil, grease, etc. on the mating surface.**
  - **The diameter or thickness of the applied sealant is extremely different at each part.**
  - **The applied sealant has some breaks.**

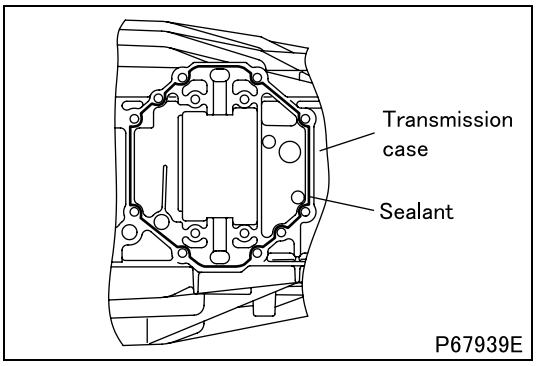

<Case of using nozzle gun>

- Clean the mating surfaces of each part.
- Apply sealant on the width center of the mating surfaces so that the diameter of the applied sealant is the same as the diameter of the nozzle. The line of applying sealant is illustrated.

<Case of using spatula, etc.>

- Clean the mating surfaces of each part.
- Apply sealant evenly on the entire mating surfaces.

GEAR SHIFTER UPPER

Gear Shifter Upper

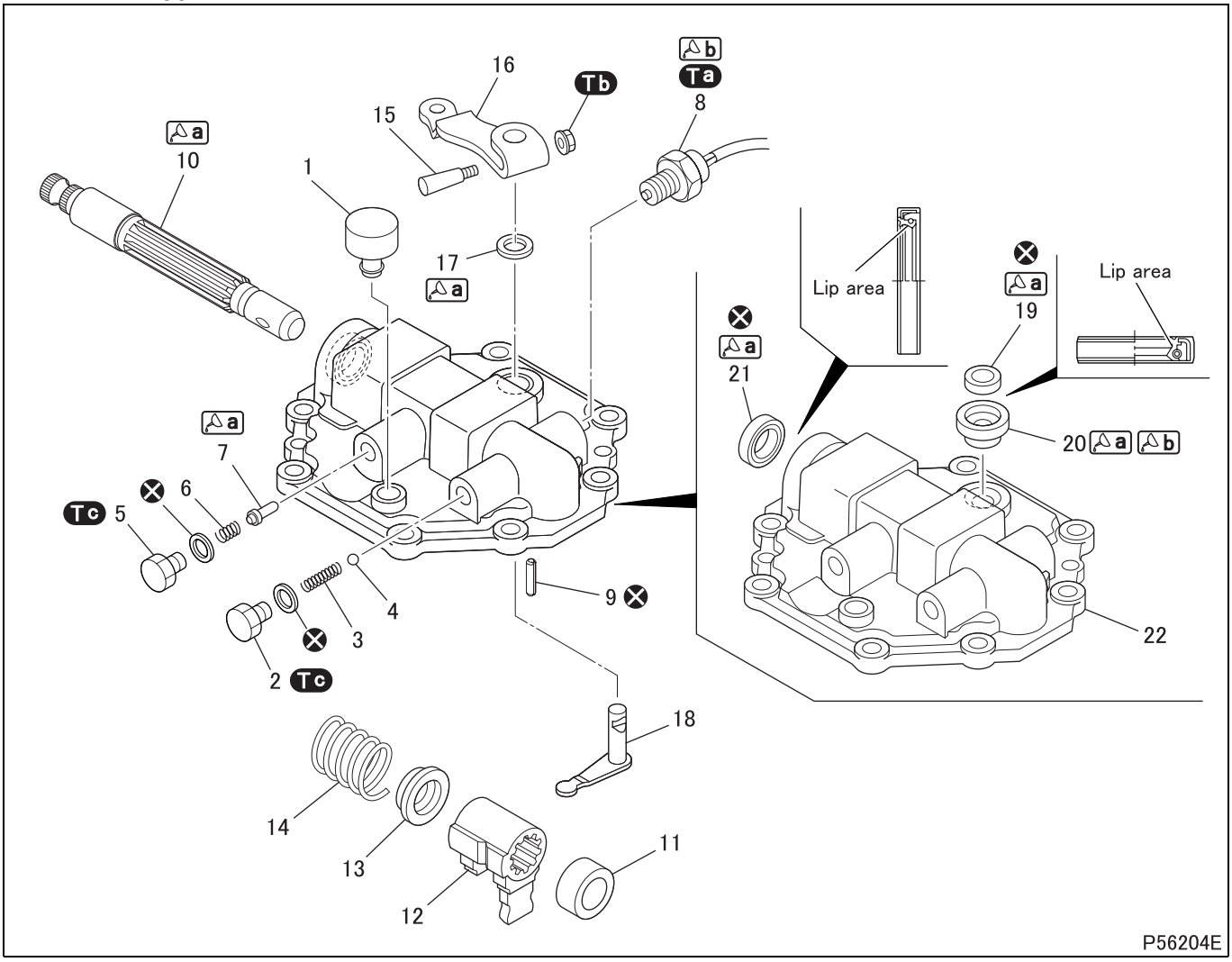

● Disassembly sequence

1 Air breather
2 Plug
3 Neutral poppet spring
4 Steel ball
5 Plug
6 Select poppet spring
7 Select poppet pin
8 Neutral switch
9 Spring pin
10 Torsion shaft
11 Spacer <S5>
12 Gear shift sliding lever
13 Spring retainer
14 Return spring
15 Lock pin
16 Gear selector lever
17 Washer
18 Gear selector lever
19 Oil seal
20 Bushing
21 Oil seal
22 Selector lever case

⊗: Non-reusable parts

NOTE

- **Do not remove bushing except for replacement.**

● Assembly sequence

Follow the disassembly sequence in reverse.

Service standards (Unit: mm {in.})

Location	Maintenance item	Standard value	Limit	Remedy
3	Neutral poppet spring installed load (installed length 27.9 {1.10})	70.8 N {16 lbs, 7.22 kgf}	50 N {11 lbs, 5.1 kgf}	Replace
6	Select poppet spring installed load (installed length 11 {0.43})	19.6 N {4.4 lbs, 1.99 kgf}	14 N {3.1 lbs, 1.4 kgf}	Replace
14	Return spring installed load (installed length 26.8 {1.06})	71.3 N {16 lbs, 7.28 kgf}	50 N {11 lbs, 5.1 kgf}	Replace

Tightening torque (Unit: N·m {ft.lbs, kgf·m})

Mark	Parts to be tightened	Tightening torque	Remarks
Ta	Neutral switch	49 ± 2.9 {36 ± 2.1, 5 ± 0.3}	–
Tb	Nut (lock pin mounting)	6.9 {5.1, 0.7}	–
Tc	Plug	33 to 49 {24 to 36, 3.4 to 5.0}	–

Lubricant and/or sealant

Mark	Points of application	Specified lubricant and/or sealant	Quantity
a	Sliding area of select poppet pin	Wheel bearing grease [NLGI No. 2 (Li soap)]	As required
	Neutral switch of torsion shaft and steel ball mounting groove		
	Sliding area of washer		
	Lip area of oil seal		
	Sliding area of bushing inner surface and gear selector lever shaft		
b	Thread area of neutral switch	ThreeBond 1104	As required
	Contact surface of bushing outer surface and selector lever case		

Special tools (Unit: mm)

Mark	Tool name and shape	Part No.	Application
Ca	Spring pin puller A: M12 × 1.25 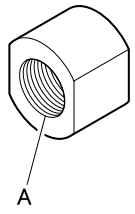 P02399	MH062445	Removal of spring pin
Cb	Reverse shaft puller A: M12 × 1.25 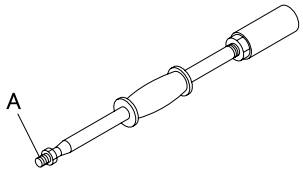 P02118	03726-82000	

◆Removal procedure◆

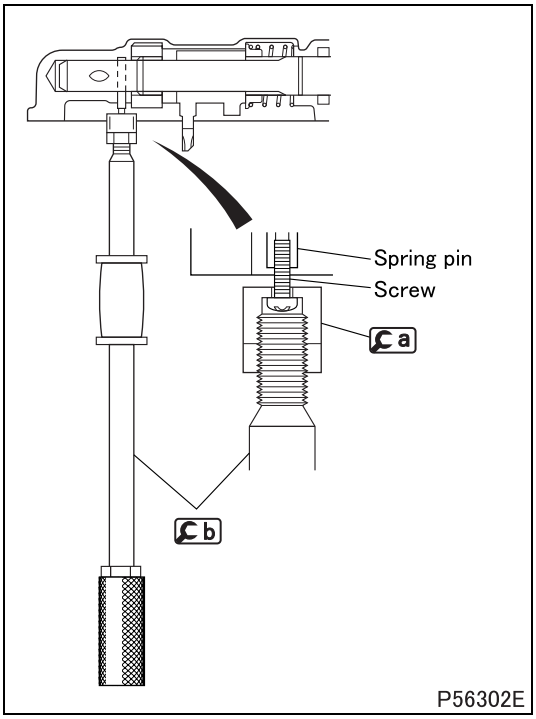

■ **Removal: Spring pin**

- Tap the spring pin using an M4 tap.
- Insert a spring pin puller with an M4 screw of appropriate length into the spring pin, and remove the spring pin using b reverse shaft puller.

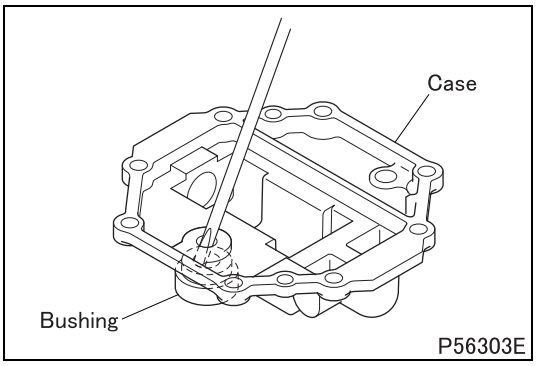

■ **Removal: Bushing**

- Remove the bushing using a screwdriver.

CAUTION ⚠

- **Be careful not to damage the selector lever case.**

◆Installation procedure◆

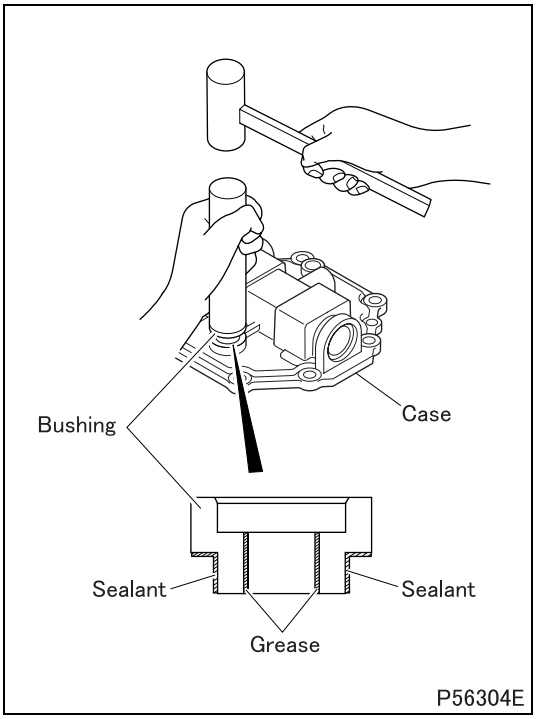

■ **Installation: Bushing**

- Clean the bushing and bushing mounting surface of the selector lever case.
- Apply grease to the inner surface of the bushing and sealant to its outer surface.

NOTE

- **Do not allow sealant to adhere to the inner surface of the bushing.**

- Mount the bushing by evenly tapping it using a round bar of outer diameter of approximately 30 mm {1.18 in.}.

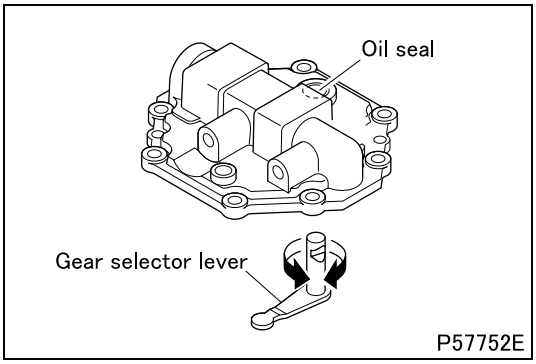

■ **Installation: Gear selector lever**

- Turn the gear selector lever when installing it in order to avoid damage to the oil seal lip.

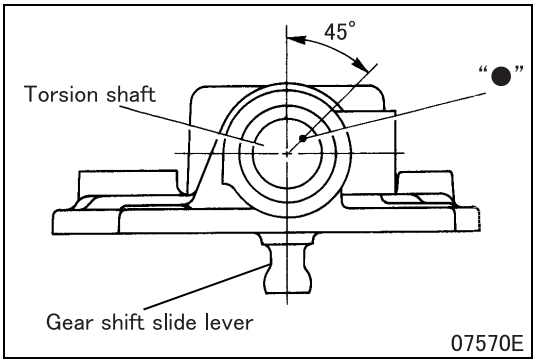

■ **Installation: Torsion shaft**

- Install the torsion shaft so that the angle the punch mark "●" at the tip of the torsion shaft forms with the gear shift slide lever is as illustrated.

REAR COVER <S5> AND PARKING BRAKE

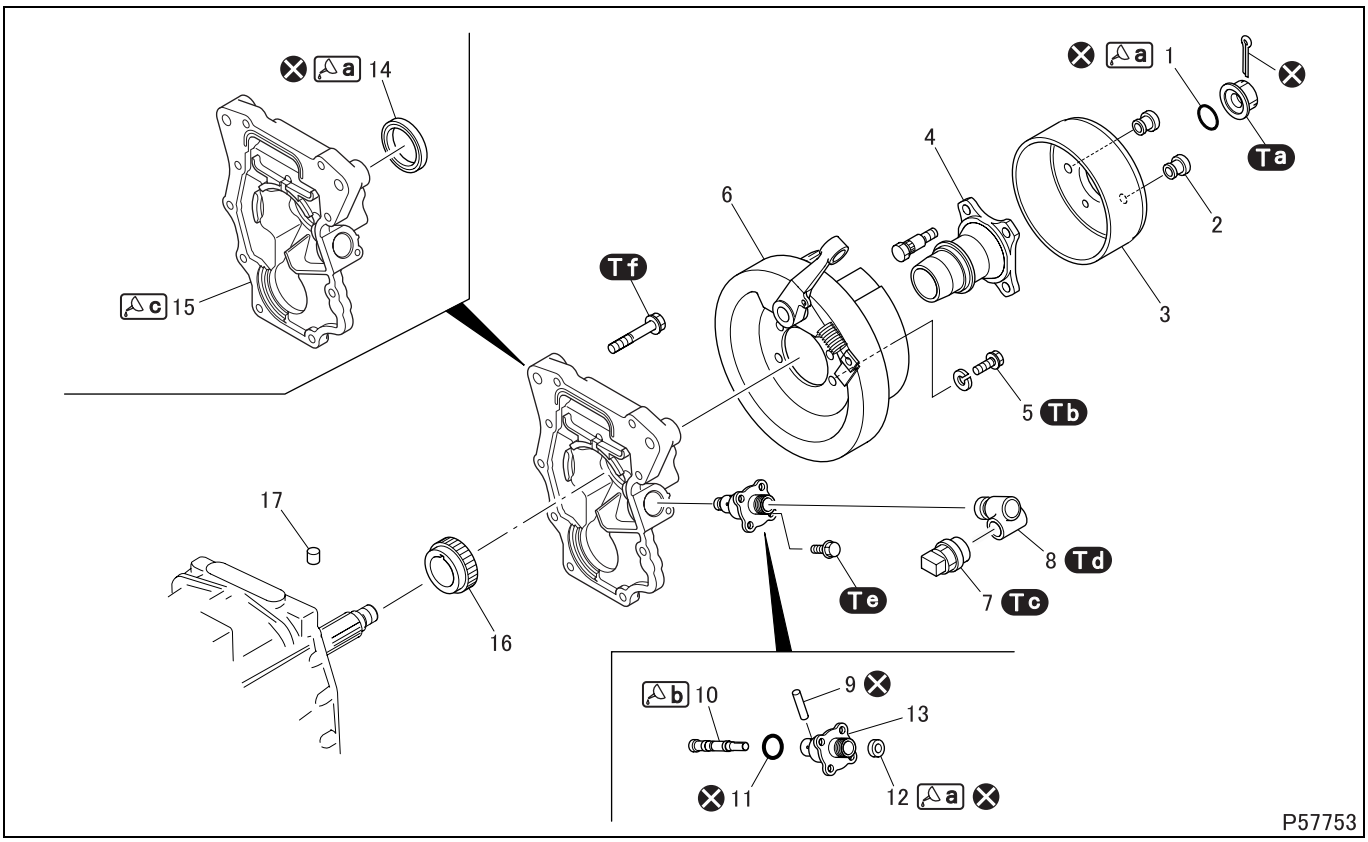

● **Disassembly sequence**

1 O-ring
2 Dust plug
3 Parking brake drum
4 Companion flange
5 Reamer bolt
6 Parking brake (See Gr36.)
7 Vehicle speed sensor
8 L-joint
9 Spring pin
10 Speedometer gear
11 O-ring
12 Oil seal
13 Speedometer gear bushing
14 Oil seal
15 Rear cover
16 Speedometer worm
17 Pin

⊗: Non-reusable parts

● **Assembly sequence**

Follow the disassembly sequence in reverse.

Service standards (Unit: mm {in.})

Location	Maintenance item		Standard value	Limit	Remedy
3	Parking brake drum	Inner diameter	$\phi 203.2\ ^{+0.3}_{0}$ {8.00 $^{+0.012}_{0}$}	ϕ205 {8.07}	Replace
		Squareness	0.05 {0.0020} or less	–	
		Concentricity	0.2 {0.0079} or less	–	
		Cylindricity	0.05 {0.0020} or less	–	
		Static rotation imbalance	0.0049 N·m {0.004 ft.lbs, 0.5 gf·m} or less	–	
4	Runout at socket portion of companion flange		0.15 {0.0059} or less	0.5 {0.020}	Replace
10, 13	Clearance between speedometer gear and speedometer gear bushing		0.04 to 0.09 {0.0016 to 0.0035}	0.15 {0.0059}	Replace

Tightening torque (Unit: N·m {ft.lbs, kgf·m})

Mark	Parts to be tightened	Tightening torque	Remarks
Ta	Lock nut	245 to 343 {180 to 250, 25 to 35}	–
Tb	Reamer bolt	52 to 66.7 {38 to 49, 5.3 to 6.8}	–
Tc	Vehicle speed sensor	14.7 to 29.4 {11 to 22, 1.5 to 3}	–
Td	L-joint	34 to 49 {25 to 36, 3.5 to 5}	–
Te	Bolt (speedometer gear bushing mounting)	23.5 {17, 2.4}	–
Tf	Bolt (rear cover mounting)	44.5 {33, 4.5}	–

Lubricant and/or sealant

Mark	Points of application	Specified lubricant and/or sealant	Quantity
a	O-ring	Wheel bearing grease [NLGI No. 2 (Li soap)]	As required
	Lip area of oil seal		
b	Sliding area of speedometer gear and speedometer gear bushing	Molybdenum disulfide grease [NLGI No. 2 (Li soap)]	As required
c	Contact surface of transmission case and rear cover	ThreeBond 1215	As required

Special tools (Unit: mm {in.})

Mark	Tool name and shape	Part No.	Application
a	Flange puller A: ϕ95 {3.74} B: ϕ100 {3.94} C: ϕ90 {3.54} 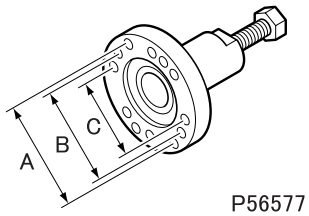 P56577	MH061848	Removal of companion flange
b	Oil seal installer A: ϕ64 {2.52} B: ϕ50 {1.97} C: 17 {0.67} 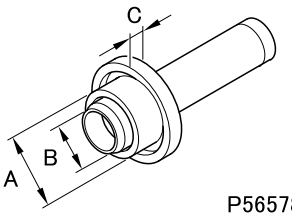 P56578	MH062691	Installation of oil seal

◆Work before removal◆

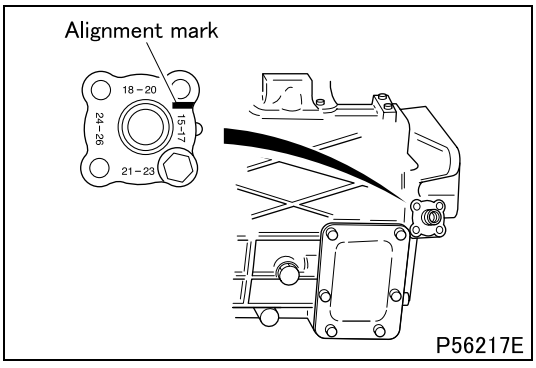

P56217E

■ Alignment marks: Speedometer gear bushing

- The installed direction of the speedometer gear bushing is determined by the number of the speedometer gear teeth.
- Put alignment marks to prevent misassembly.

◆Removal procedure◆

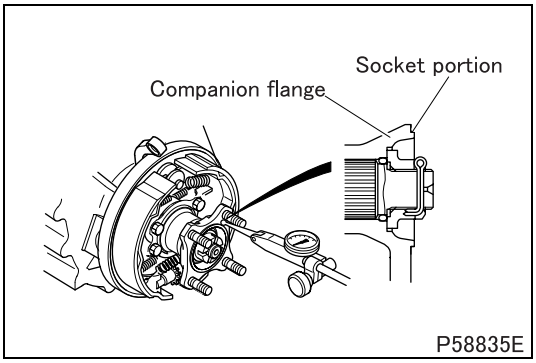

■ Inspection: Runout at socket portion of companion flange

- After removing the parking brake drum, measure runouts of the companion flange at its socket portion.
- If the measurement exceeds the specified limit, replace the companion flange.

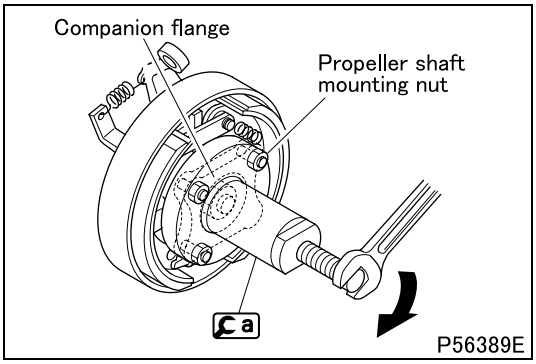

■ Removal: Companion flange

◆Inspection procedure◆

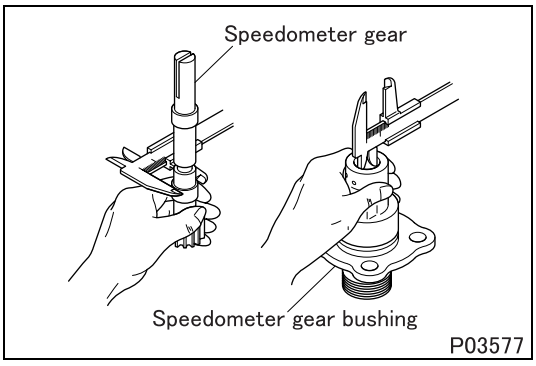

■ Inspection: Clearance between speedometer gear and speedometer gear bushing

- If the measured value exceeds the limit, replace defective parts.

◆Installation procedure◆

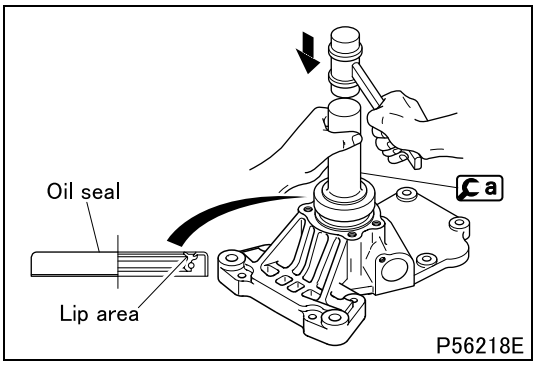

■ Installation: Oil seal

- Apply grease to the lip area of the oil seal, and install it in the illustrated direction.

■ **Installation: Rear cover**

- Apply sealant following Manners shown below.

CAUTION ⚠

- **Take care not to apply sealant like the following condition. Otherwise it causes oil leak.**
  - **There is dust, oil, grease, etc. on the mating surface.**
  - **The diameter or thickness of the applied sealant is extremely different at each part.**
  - **The applied sealant has some breaks.**

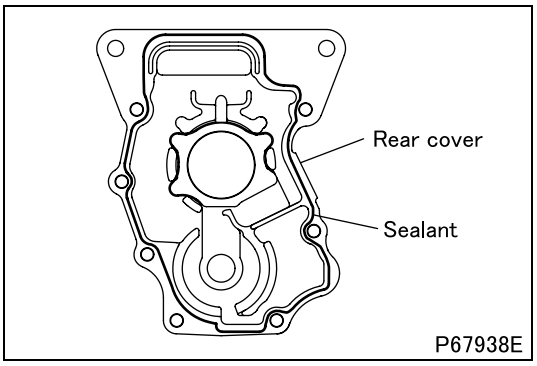

<Case of using nozzle gun>

- Clean the mating surfaces of each part.
- Apply sealant on the width center of the mating surfaces so that the diameter of the applied sealant is the same as the diameter of the nozzle. The line of applying sealant is illustrated.

<Case of using spatula, etc.>

- Clean the mating surfaces of each part.
- Apply sealant evenly on the entire mating surfaces.

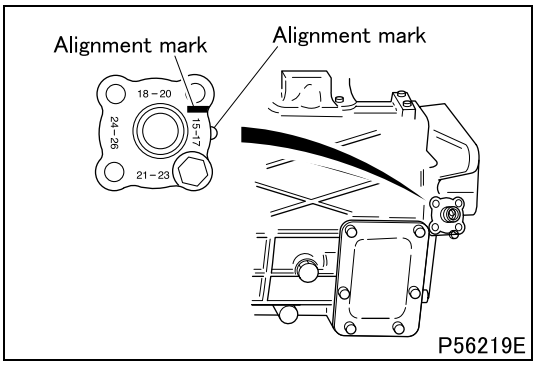

■ **Installation: Speedometer gear bushing**

- When replacing the speedometer gear bushing, align the alignment mark of the old part with that of the rear cover to install.

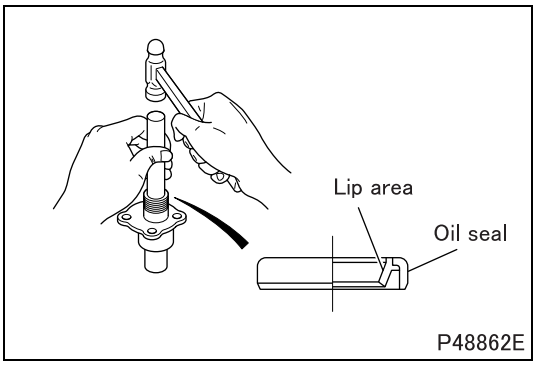

■ **Installation: Oil seal**

- Apply grease to the lip area of the oil seal.
- Install the oil seal evenly in the illustrated direction using a round bar of outer diameter of approx. 14 mm {0.55 in.}.

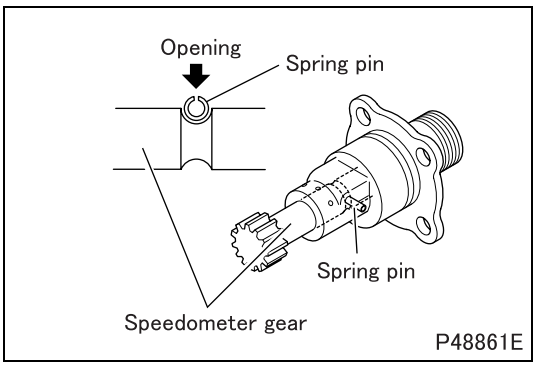

■ **Installation: Spring pin**

- Install the spring pin in the illustrated direction to prevent the speedometer gear from slipping off.

EXTENSION HOUSING <S6> AND PARKING BRAKE

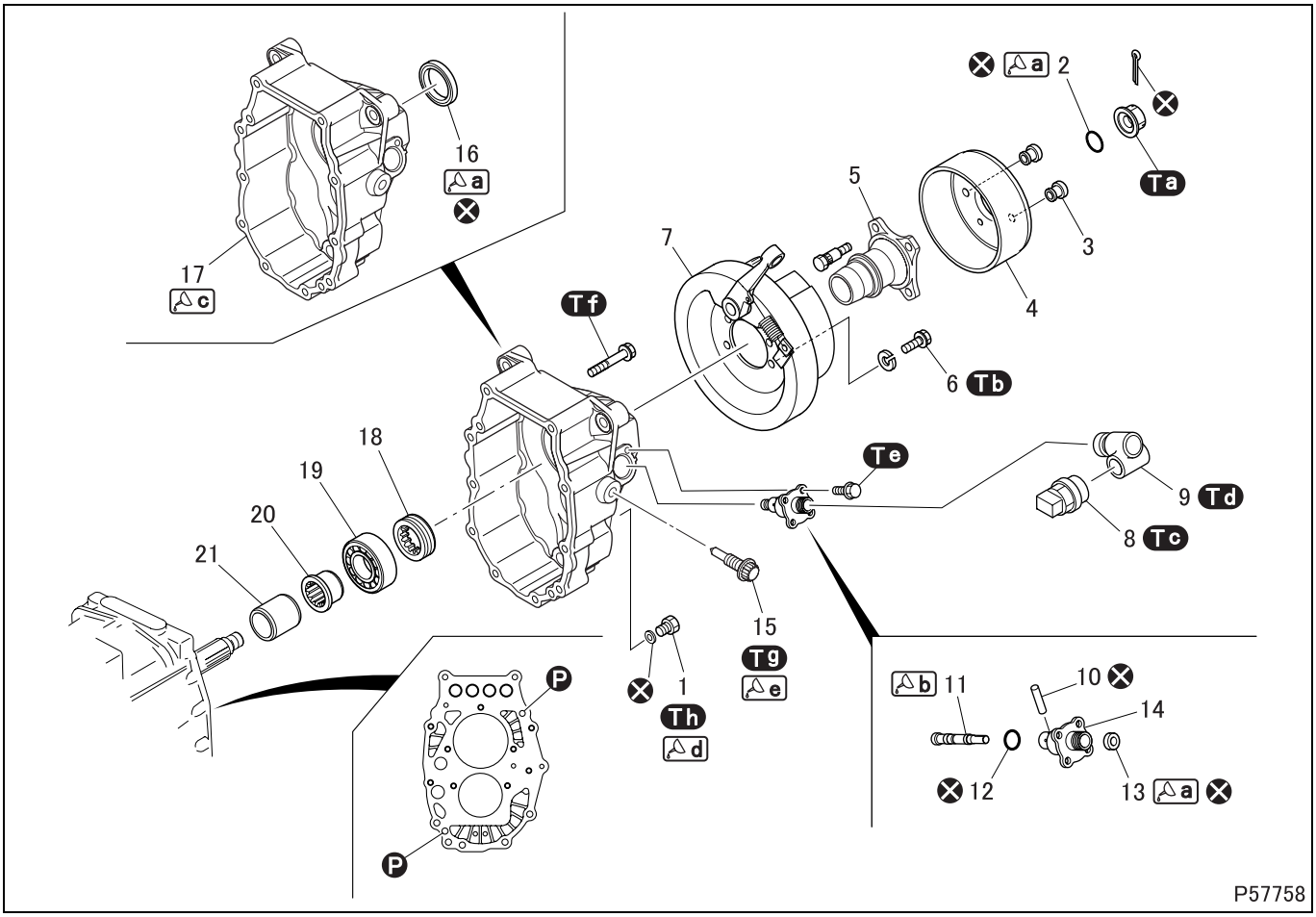

● **Disassembly sequence**

1 Drain plug
2 O-ring
3 Dust plug
4 Parking brake drum
5 Companion flange
6 Reamer bolt
7 Parking brake (See Gr36.)
8 Vehicle speed sensor
9 L-joint
10 Spring pin
11 Speedometer gear
12 O-ring
13 Oil seal
14 Speedometer gear bushing
15 Lever set bolt
16 Oil seal
17 Extension housing
18 Speedometer worm
19 Bearing
20 Bearing retainer
21 Distance pipe

Ⓟ: Locating pin
⊗: Non-reusable parts

● **Assembly sequence**

Follow the disassembly sequence in reverse.

Service standards (Unit: mm {in.})

Location	Maintenance item		Standard value	Limit	Remedy
4	Parking brake drum	Inner diameter	$\phi 203.2\ ^{+0.3}_{0}$ {$8.00\ ^{+0.012}_{0}$}	ϕ205 {8.07}	Replace
		Squareness	0.05 {0.0020} or less	–	
		Concentricity	0.2 {0.0079} or less	–	
		Cylindricity	0.05 {0.0020} or less	–	
		Static rotation imbalance	0.0049 N·m {0.004 ft.lbs, 0.5 gf·m} or less	–	
5	Runout at socket portion of companion flange		0.15 {0.0059} or less	0.5 {0.020}	Replace
11, 14	Clearance between speedometer gear and speedometer gear bushing		0.04 to 0.09 {0.0016 to 0.0035}	0.15 {0.0059}	Replace

Tightening torque (Unit: N·m {ft.lbs, kgf·m})

Mark	Parts to be tightened	Tightening torque	Remarks
Ta	Lock nut	245 to 343 {180 to 250, 25 to 35}	–
Tb	Reamer bolt	52 to 66.7 {38 to 49, 5.3 to 6.8}	–
Tc	Vehicle speed sensor	14.7 to 29.4 {11 to 22, 1.5 to 3}	–
Td	L-joint	34 to 49 {25 to 36, 3.5 to 5}	–
Te	Bolt (speedometer gear bushing mounting)	23.5 {17, 2.4}	–
Tf	Bolt (extension housing mounting)	44.5 {33, 4.5}	–
Tg	Lever set bolt	160 {120, 16.3}	–
Th	Drain plug	68.6 ± 14.7 {50.6 ± 10.8, 7.0 ± 1.5}	–

Lubricant and/or sealant

Mark	Points of application	Specified lubricant and/or sealant	Quantity
a	O-ring	Wheel bearing grease	As required
	Lip area of oil seal		
b	Sliding surface of speedometer gear and speedometer gear bushing	Molybdenum disulfide grease [NLGI No. 2 (Li soap)]	As required
c	Mating surface of extension housing and transmission case	ThreeBond 1215	As required
d	Thread area of drain plug	ThreeBond 1105	As required
e	Thread area of lever set bolt	Loctite 271	As required

Special tools (Unit: mm {in.})

Mark	Tool name and shape	Part No.	Application
Ca	Flange puller A: φ95 {3.74}, B: φ100 {3.94}, C: φ90 {3.54} 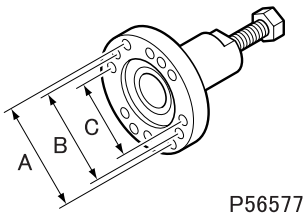 P56577	MH061848	Removal of companion flange
Cb	Oil seal installer A: φ64 {2.52}, B: φ50 {1.97}, C: 17 {0.67} 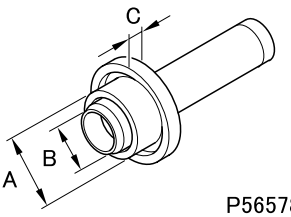 P56578	MH062691	Installation of oil seal

◆Work before removal◆

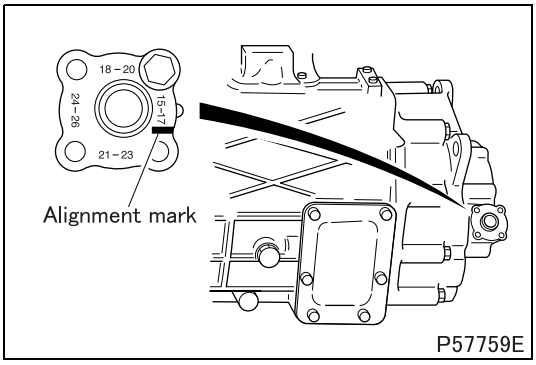

P57759E

■ Alignment marks: Speedometer gear bushing

- The installed direction of the speedometer gear bushing is determined by the number of the speedometer gear teeth.
- Put alignment marks to prevent misassembly.

◆Removal procedure◆

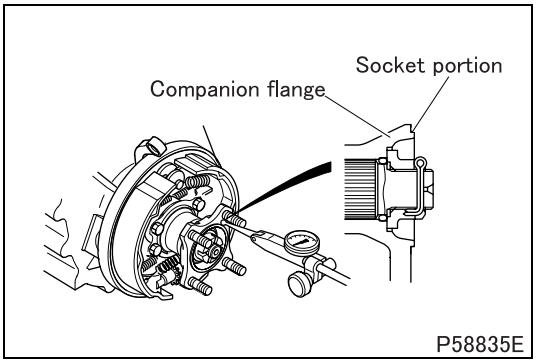

■ Inspection: Runout at socket portion of companion flange

- After removing the parking brake drum, measure runouts of the companion flange at its socket portion.
- If the measurement exceeds the specified limit, replace the companion flange.

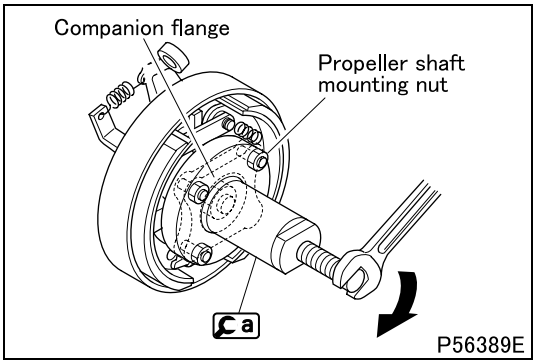

■ Removal: Companion flange

◆Inspection procedure◆

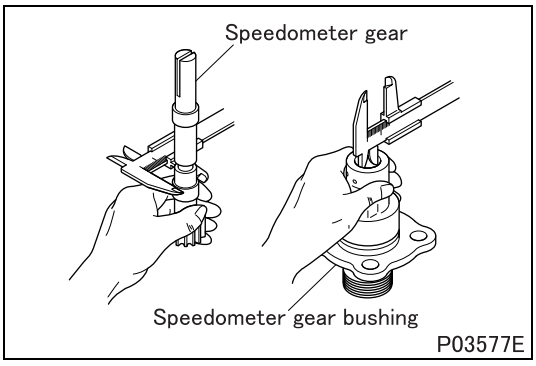

■ Inspection: Clearance between speedometer gear and speedometer gear bushing

- If the measured value exceeds the limit, replace defective parts.

◆Installation procedure◆

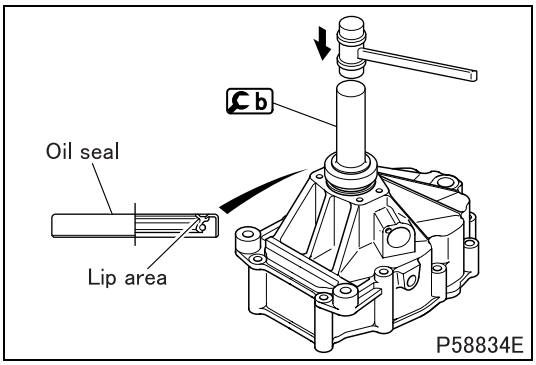

■ Installation: Oil seal

- Apply grease to the lip area of the oil seal, and install it on the extension housing in the illustrated direction.

■ **Installation: Extension housing**

- Apply sealant following Manners shown below.

CAUTION ⚠

- **Take care not to apply sealant like the following condition. Otherwise it causes oil leak.**
  - **There is dust, oil, grease, etc. on the mating surface.**
  - **The diameter or thickness of the applied sealant is extremely different at each part.**
  - **The applied sealant has some breaks.**

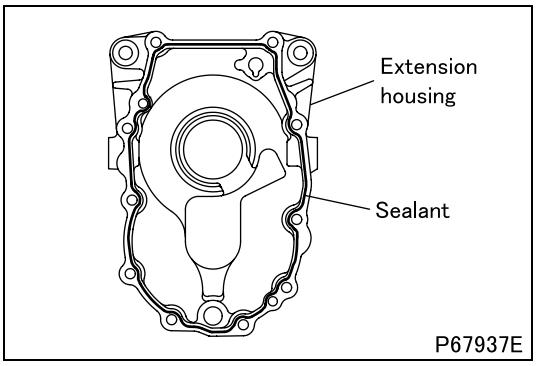

<Case of using nozzle gun>

- Clean the mating surfaces of each part.
- Apply sealant on the width center of the mating surfaces so that the diameter of the applied sealant is the same as the diameter of the nozzle. The line of applying sealant is illustrated.

<Case of using spatula, etc.>

- Clean the mating surfaces of each part.
- Apply sealant evenly on the entire mating surfaces.

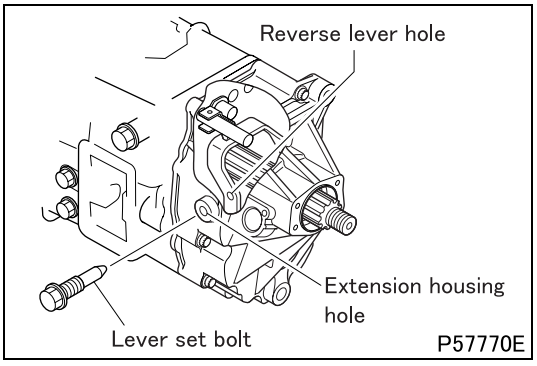

■ **Installation: Lever set bolt**

- Apply sealant to the thread areas of the lever set bolts to install them onto the extension housing holes and reverse lever hole.

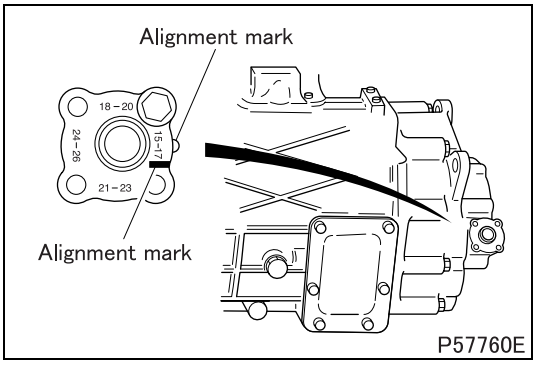

■ **Installation: Speedometer gear bushing**

- When replacing the speedometer gear bushing, align the alignment mark of the old part with that of the rear cover to install.

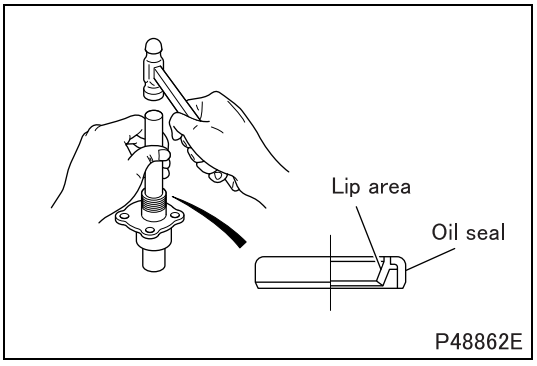

■ **Installation: Oil seal**

- Apply grease to the lip area of the oil seal.
- Install the oil seal evenly in the illustrated direction using a round bar of outer diameter of approx. 14 mm {0.55 in.}.

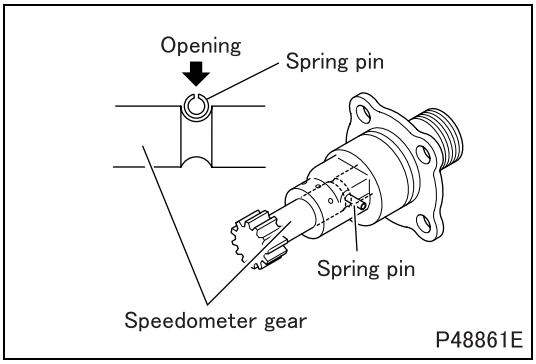

■ **Installation: Spring pin**

- Install the spring pin in the illustrated direction to prevent the speedometer gear from slipping off.

M E M O

REVERSE IDLER GEAR

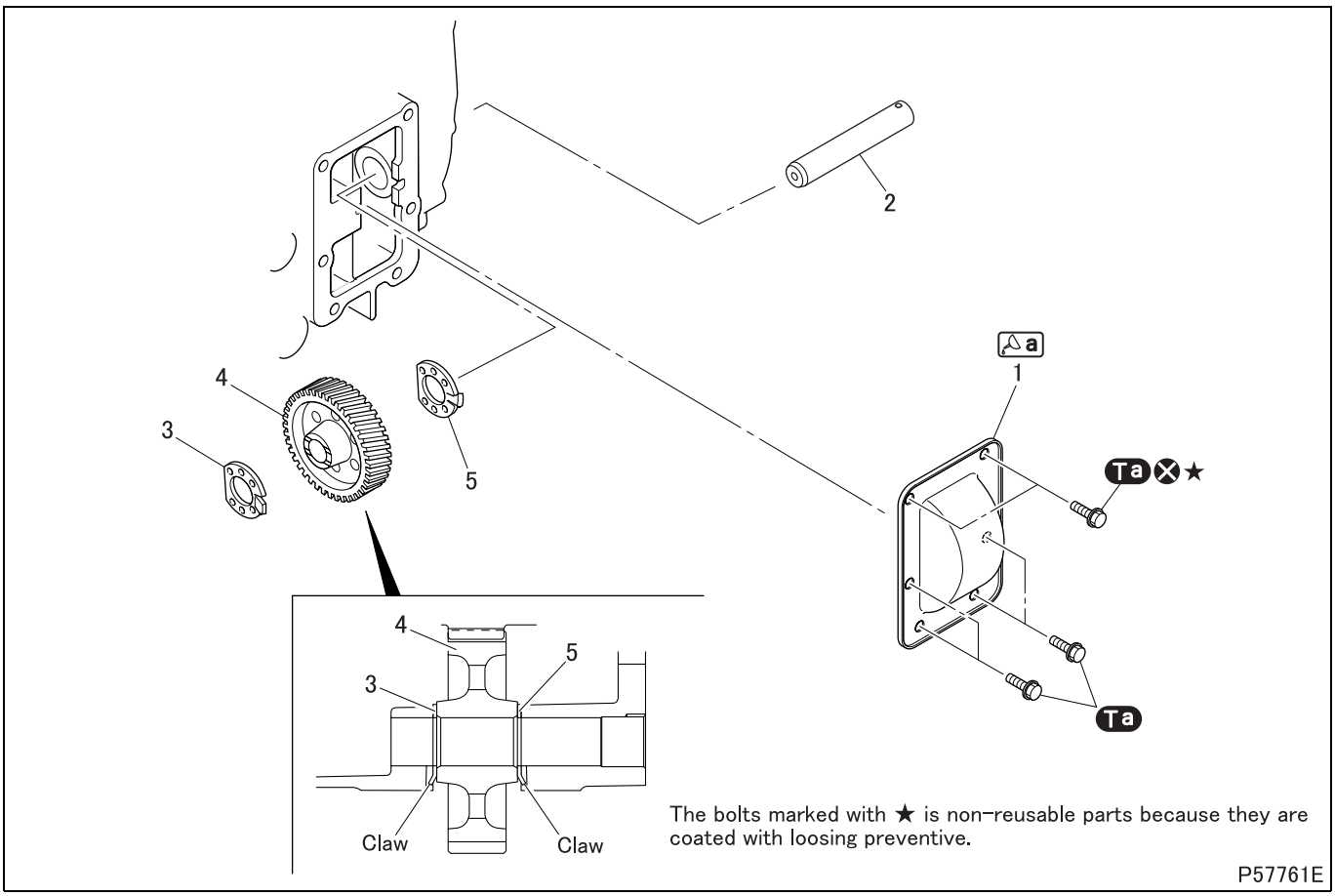

● **Disassembly sequence**

1 Power take-off cover
2 Reverse idler gear shaft
3 Side washer
4 Reverse idler gear
5 Side washer

⊗: Non-reusable parts

● **Assembly sequence**

Follow the disassembly sequence in reverse.

Service standards (Unit: mm {in.})

Location	Maintenance item	Standard value	Limit	Remedy
2, 4	Play of reverse idler gear in diameter direction	0.045 to 0.107 {0.0018 to 0.0042}	0.4 {0.016}	Replace

Tightening torque (Unit: N·m {ft.lbs, kgf·m})

Mark	Parts to be tightened	Tightening torque	Remarks
Ta	Bolt (power take-off cover)	44.5 {33, 4.5}	–

Lubricant and/or sealant

Mark	Points of application	Specified lubricant and/or sealant	Quantity
a	Mating surface of power take-off cover and transmission case	Loctite 5999	As required

Special tools (Unit: mm)

Mark	Tool name and shape	Part No.	Application
a	Reverse shaft puller A: M12 × 1.25 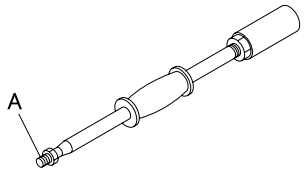 P02118	03726-82000	Removal of reverse idler gear shaft

◆Removal procedure◆

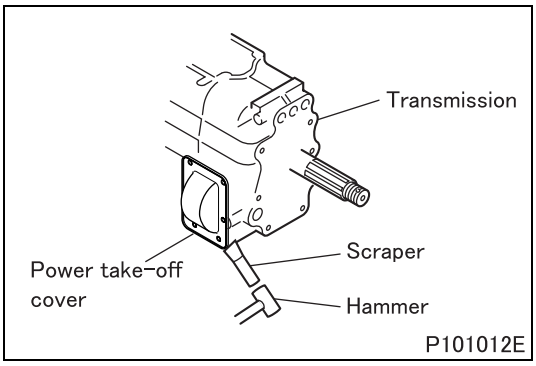

P101012E

■ **Removal: Power take-off cover**

- Insert a scraper from the lower right or lower left of the power take-off cover to remove the power take-off cover.

CAUTION ⚠

- **Be careful that prying the scraper halfway could deform the power take-off cover or damage the transmission case.**

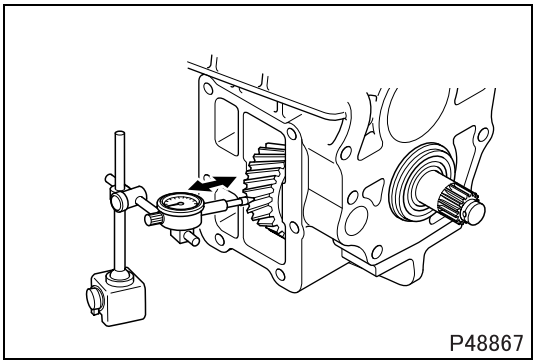
P48867

■ **Inspection: Play of reverse idler gear in diameter direction**

- If the measured value exceeds the limit, replace defective parts.
- Check the play again after assembly and make sure it does not exceed the limit.

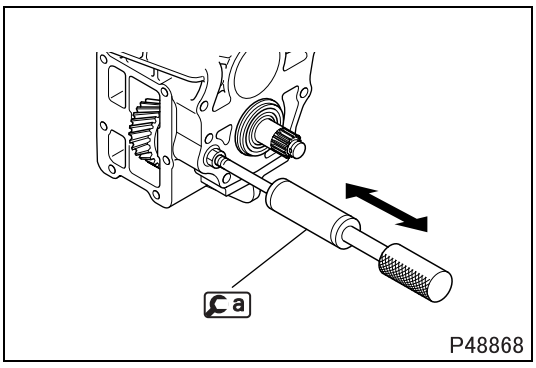

P48868

■ **Removal: Reverse idler gear shaft**

◆Installation procedure◆

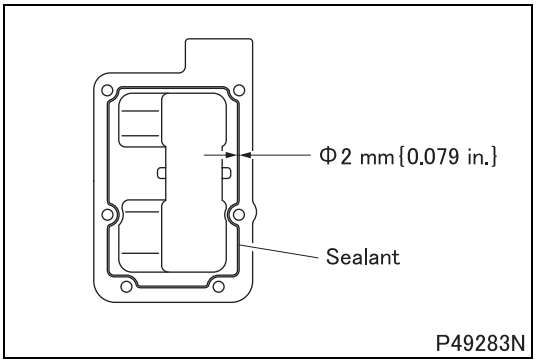

■ **Installation: Power take-off cover**

- Clean the seal surface of each part.
- Apply the sealant to the transmission case mounting surface of the power take-off cover evenly and without breaks.
- Install the power take-off cover within three minutes after applying the sealant. Be sure not to allow the sealant to be displaced.

CAUTION ⚠

- **Do not start the engine within one hour after installing the power take-off cover.**
- **When loosening or removing power take-off cover mounting bolts, be sure to reapply the sealant.**

M E M O

6TH GEAR <S6>

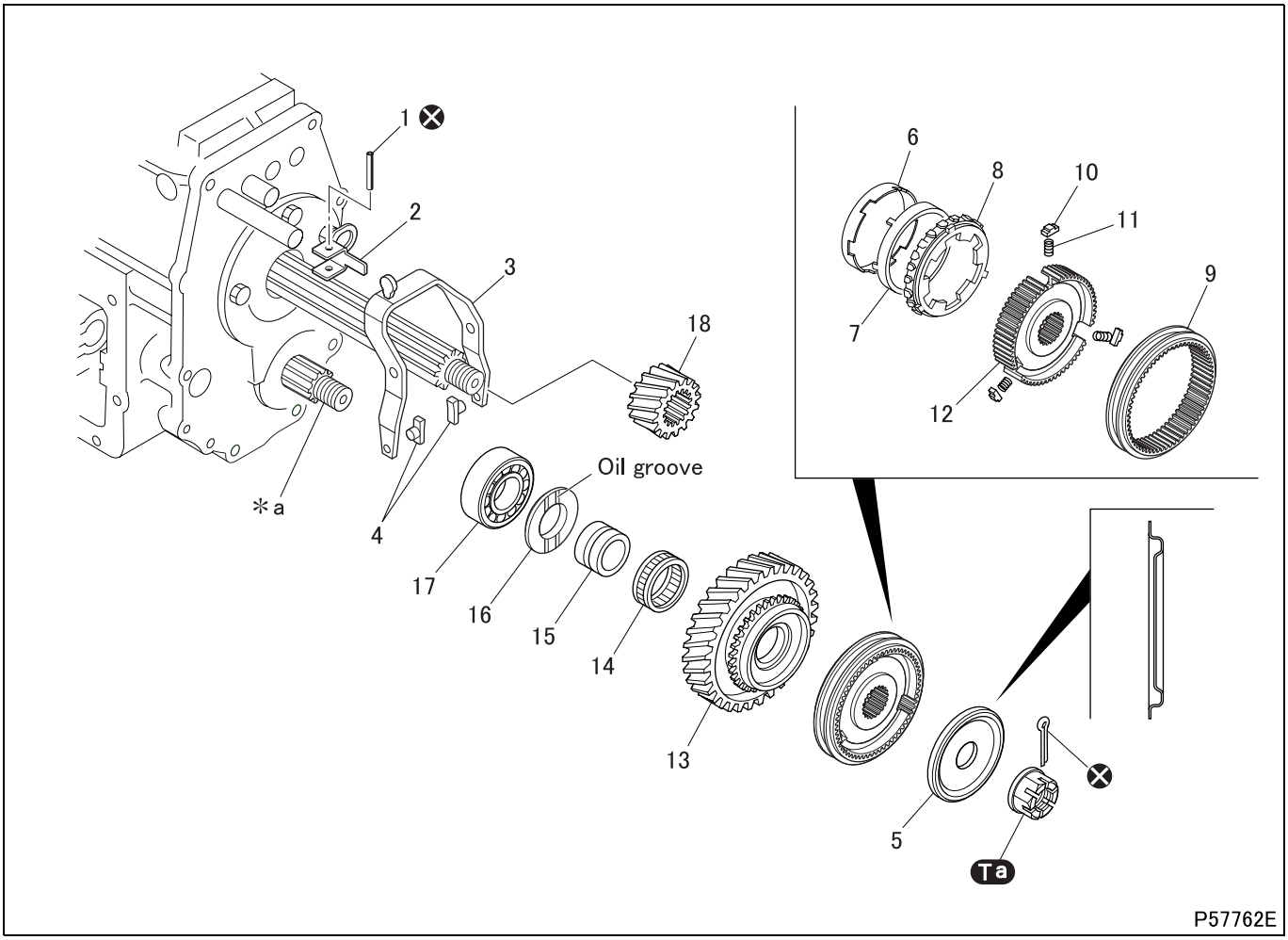

● **Disassembly sequence**

1 Spring pin
2 6th shift rail jaw B
3 6th reverse lever
4 Gear shift fork piece
5 Shifting key retainer
6 Synchronizer inner ring
7 Synchronizer center cone
8 Synchronizer outer ring
9 Synchronizer sleeve
10 Shifting plunger
11 Shifting plunger spring
12 Synchronizer hub
13 Countershaft 6th gear
14 Needle bearing
15 Countershaft 6th gear sleeve
16 Thrust washer
17 Countershaft rear bearing
18 Mainshaft 6th gear

***a**: Countershaft
⊗: Non-reusable parts

● **Assembly sequence**

Follow the disassembly sequence in reverse.

NOTE

- **Place the synchronizer sleeve in neutral position before installing the 6th reverse lever.**

Service standards (Unit: mm {in.})

Location	Maintenance item	Standard value	Limit	Remedy
4, 9	Clearance between 6th gear shift fork piece and synchronizer sleeve	0.3 to 0.6 {0.012 to 0.024}	1.0 {0.039}	Replace
8, 12	Clearance between protrusion of synchronizer outer ring and synchronizer hub groove	3.0 to 3.3 {0.12 to 0.13}	4.0 {0.16}	Replace
8, 13	Clearance between synchronizer outer ring and countershaft 6th gear	0.96 to 1.54 {0.038 to 0.061}	0.5 {0.020}	Replace
13	End play of countershaft 6th gear	0.25 to 0.35 {0.0098 to 0.014}	0.7 {0.028}	Replace
13 to 15	Play of countershaft 6th gear in diameter direction	0.08 to 0.14 {0.0031 to 0.0055}	0.2 {0.0079}	Replace

Tightening torque (Unit: N·m {ft.lbs, kgf·m})

Mark	Parts to be tightened	Tightening torque	Remarks
Ta	Lock nut	295 to 392 {215 to 290, 30 to 40}	–

Special tools (Unit: mm {in.})

Mark	Tool name and shape	Part No.	Application
a	Bearing puller and installer A: ϕ68 {2.68}, B: 73.5 {2.89} 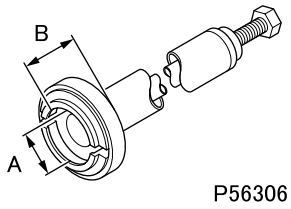 P56306	MH062697	Removal of countershaft 6th gear sleeve, thrust washer and countershaft rear bearing
b	Bearing puller and installer A: ϕ80, B: ϕ42 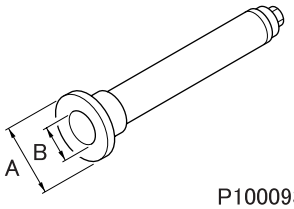 P100093	MH062696	Installation of countershaft rear bearing
c	Bearing puller and installer A: ϕ80, B: ϕ56, C: ϕ45.5 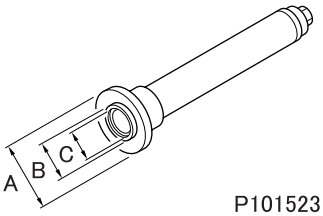 P101523		Installation of countershaft 6th gear sleeve

◆Work before removal◆

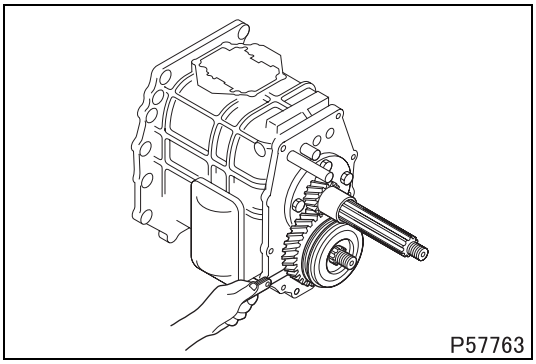
P57763

■ Inspection: End play of countershaft 6th gear

- If the measured value exceeds the limit, replace defective parts.

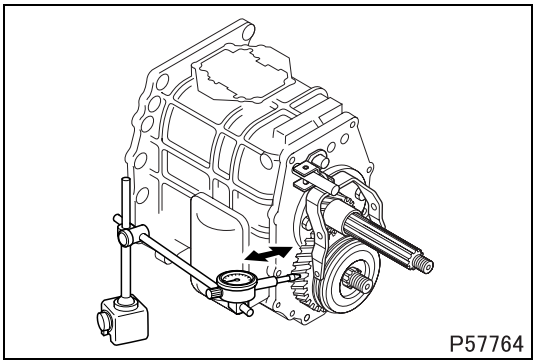

■ **Inspection: Play of countershaft 6th gear in diameter direction**

- If the measured value exceeds the limit, replace defective parts.

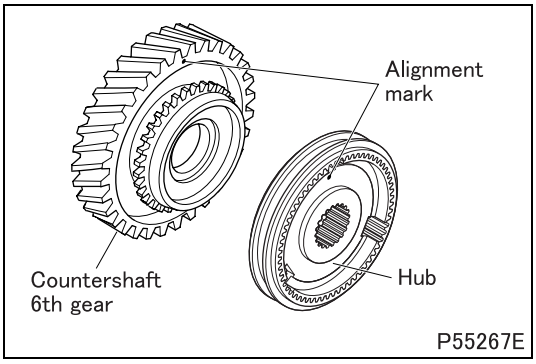

■ **Alignment marks: Synchronizer hub and countershaft 6th gear**

- Put alignment marks on the synchronizer hub and countershaft 6th gear, each at one location before disassembly.
- Put alignment marks on the synchronizer inner ring, center cone, outer ring and sleeve, each at one location, aligning with the alignment mark put on the synchronizer hub before disassembly.

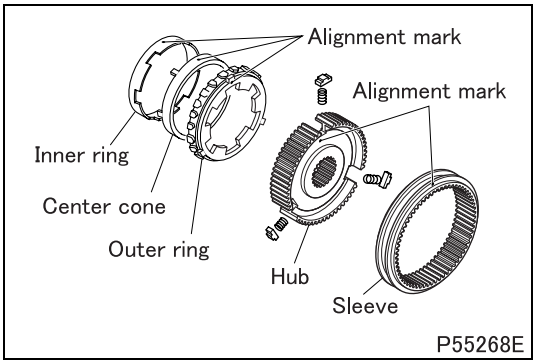

◆Removal procedure◆

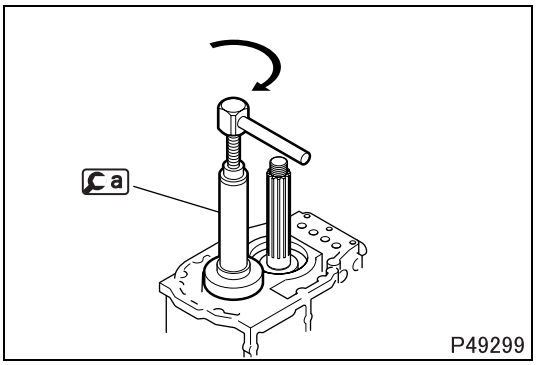

■ **Removal: Countershaft 6th gear sleeve, thrust washer and countershaft rear bearing**

- Remove the countershaft rear bearing together with the sleeve and washer.

◆Inspection procedure◆

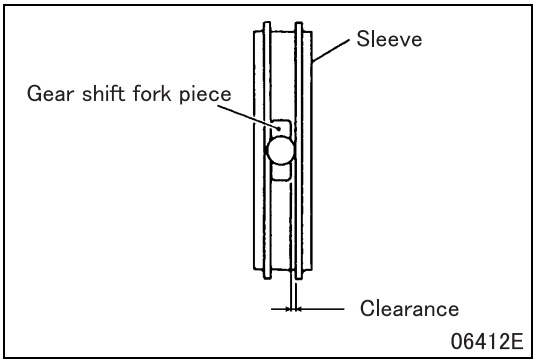

■ **Inspection: Clearance between gear shift fork piece and synchronizer sleeve of mainshaft**

- If the measured value exceeds the limit, replace defective parts.

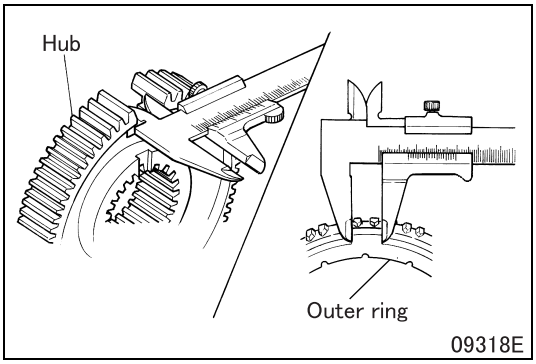

■ **Inspection: Clearance between synchronizer outer ring and synchronizer hub**

- If the measured value exceeds the limit, replace defective parts.

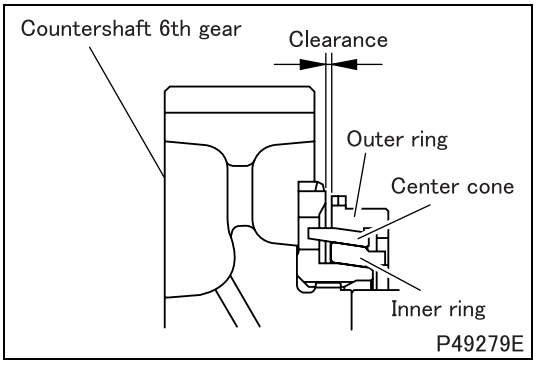

■ **Inspection: Clearance between synchronizer outer ring and countershaft 6th gear**

- When measuring the clearance, press each synchronizer ring and center cone evenly against the gear and measure all around the circumference.
- If the measured value is less than the limit, replace defective parts.

◆Installation procedure◆

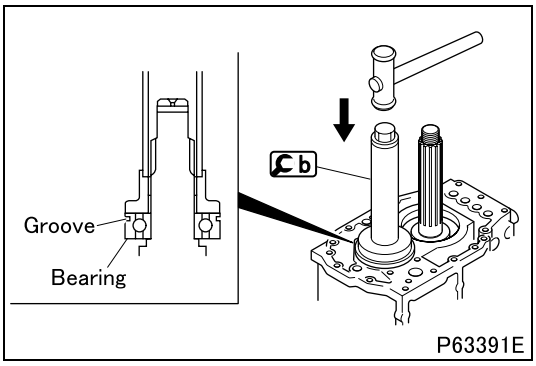

■ **Installation: Countershaft rear bearing**

- Install the countershaft rear bearing on the countershaft in the illustrated direction.

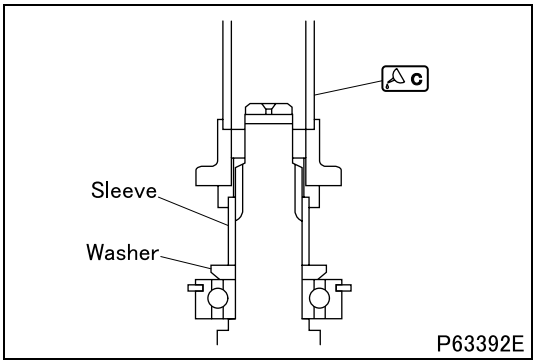

■ **Installation: Countershaft 6th gear sleeve**

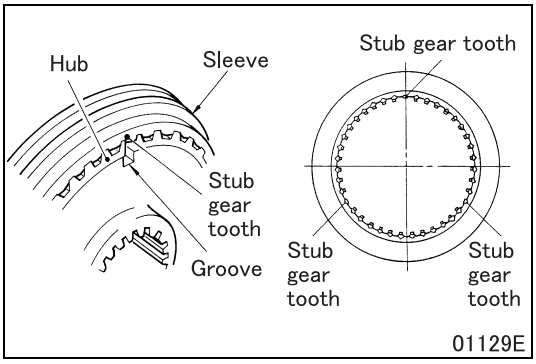

■ **Installation: Synchronizer sleeve and synchronizer hub**

- When replacing the synchronizer sleeve or synchronizer hub with a new one, align the three keyways of the synchronizer hub with three locations of the stub gear tooth of the synchronizer sleeve to install.

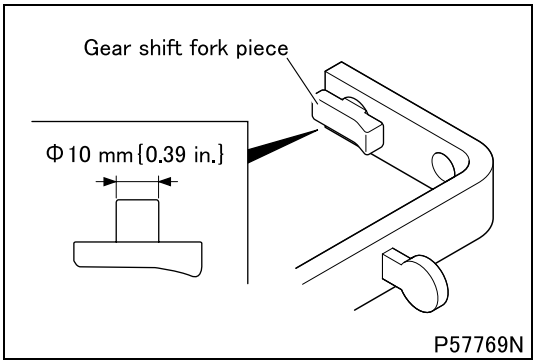

■ **Installation: Gear shift fork piece**

- Install the gear shift fork piece on the reverse lever as shown in the illustration after checking that its shaft diameter is appropriate.

CAUTION ⚠

- **Never fail to check the shaft diameter of the gear shift fork piece. Installation of any gear shift fork piece with a smaller diameter shaft is possible but not permitted.**

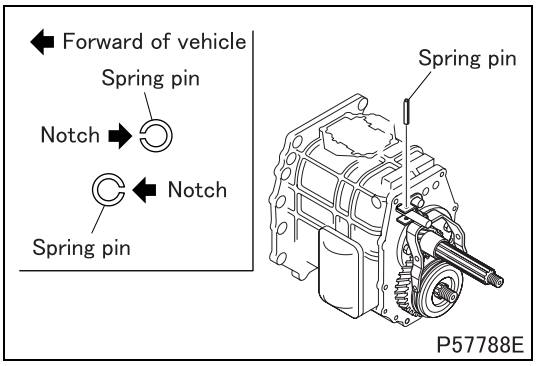

■ **Installation: Spring pin**

- Install the spring pin in the illustrated direction (the spring pin notch to be positioned forward or rearward of the vehicle). When installing the spring pin, leave 0 to 0.5 mm {0 to 0.020 in.} outside from the transmission shift rail.

CAUTION ⚠

- **Drive the spring pin carefully not to impose too much load on the transmission shift rail.**

M E M O

TRANSMISSION BODY

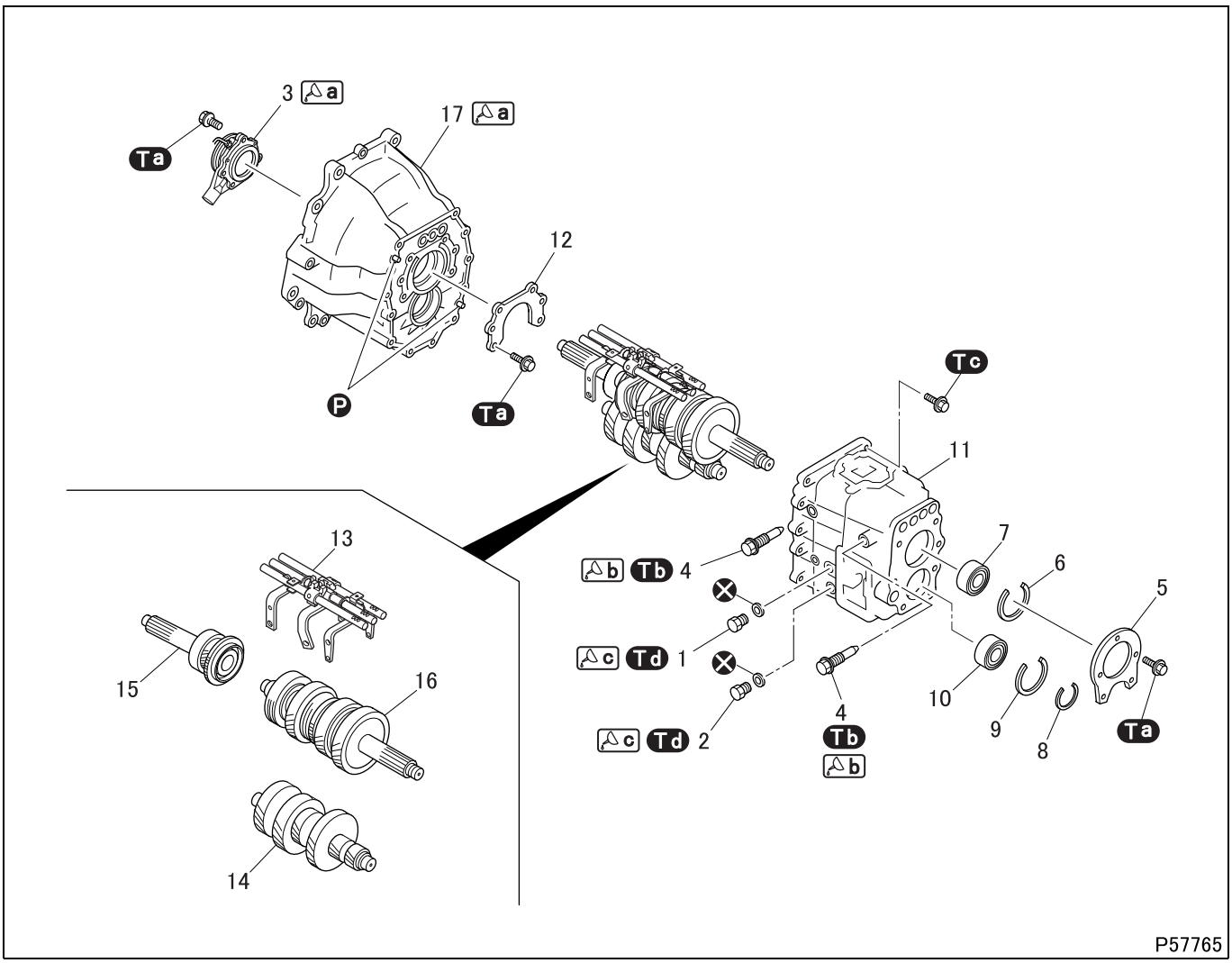

● **Disassembly sequence**

1 Inspection plug
2 Drain plug
3 Direct power cylinder (See Gr21.)
4 Lever set bolt
5 Rear bearing retainer <S6>
6 Snap ring
7 Mainshaft rear bearing
8 Snap ring <S5>
9 Snap ring <S5>
10 Countershaft rear bearing <S5>
11 Transmission case
12 Bearing retainer
13 Shift rail and shift fork (See later section.)
14 Countershaft (See later section.)
15 Drive pinion (See later section.)
16 Mainshaft (See later section.)
17 Clutch housing

Ⓟ: Locating pin
⊗: Non-reusable parts

NOTE

- **After removing direct power cylinder, perform work with the transmission body laid vertically on its clutch housing side.**
- **If the countershaft, drive pinion and mainshaft are not disassembled, the shift rail and shift fork can be disassembled on its own while mounted on the clutch housing.**
- **For the removal and installation procedures of the countershaft bearings of the M036S6 transmission, see "6TH GEAR <S6>" section.**

● Assembly sequence

Follow the disassembly sequence in reverse.

NOTE

- **Place the synchronizer sleeve of the mainshaft in the neutral position before installing the shift rail and shift fork on the mainshaft.**

Tightening torque (Unit: N·m {ft.lbs, kgf·m})

Mark	Parts to be tightened	Tightening torque	Remarks
Ta	Bolt (bearing retainer mounting)	44.5 {33, 4.5}	–
	Bolt (rear bearing retainer mounting)		
	Bolt (direct power cylinder mounting)		
Tb	Lever set bolt	160 {120, 16.3}	–
Tc	Bolt (transmission case mounting)	54 {40, 5.5}	–
Td	Inspection plug	68.6 ± 14.7 {51 ± 11, 7.0 ± 1.5}	–
	Drain plug		

Lubricant and/or sealant

Mark	Points of application	Specified lubricant and/or sealant	Quantity
a	Clutch housing mounting surface of direct power cylinder	ThreeBond 1215	As required
	Transmission case mounting surface of clutch housing		
b	Thread area of lever set bolt	Loctite 271	As required
c	Thread area of inspection plug	ThreeBond 1105	As required
	Thread area of drain plug		

Special tools (Unit: mm {in.})

Mark	Tool name and shape	Part No.	Application
a	Snap ring expander 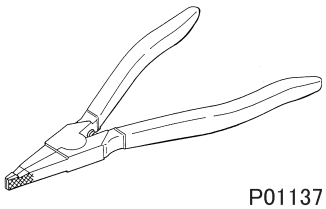 P01137	MH061268	Removal and installation of snap ring
b	Bearing puller and installer A: ϕ96.8 {3.81} 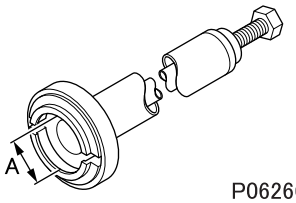 P06266	MH062697	Removal and installation of mainshaft rear bearing
c	Bearing puller and installer 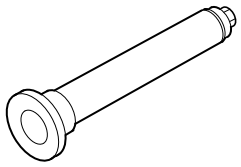 P49555		
d	Bearing puller and installer A: ϕ76.8 {3.02} B: 25 {0.98} 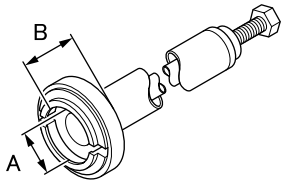 P56306	MH062696	Removal of countershaft rear bearing
e	Bearing puller and installer 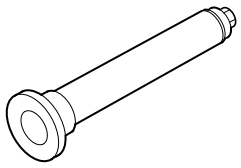 P49555	MH062696	Installation of countershaft rear bearing
f	Eyebolt A: M10 × 1.5 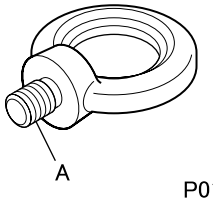 P01140	MH062340	Lifting of transmission case

Mark	Tool name and shape	Part No.	Application
g	Steel lifting band A: 251 {9.88} 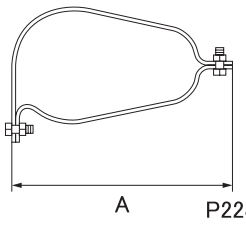 P22884	MH063410	Removal and installation of countershaft, mainshaft and drive pinion
h	Eye nut A: M24 × 1.5 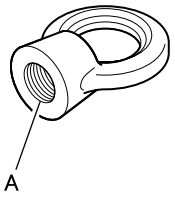 P01142	MH063308	
i	Synchromesh guard S5: A 98 {3.86}, B 30 {1.18} S6: A 98 {3.86}, B 31 {1.22} 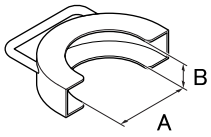 P51250	<S5> MH062888 <S6> MH062889	For preventing synchromesh from sticking when mainshaft is driven

◆Removal procedure◆

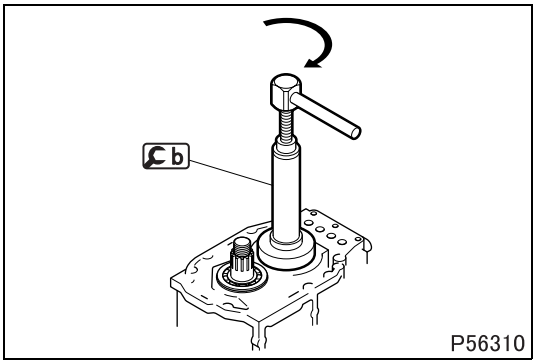

P56310

■ **Removal: Mainshaft rear bearing**

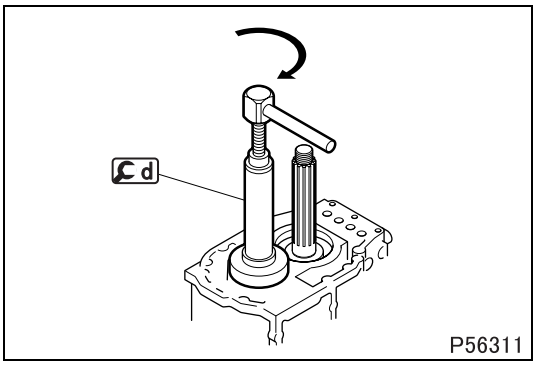

P56311

■ **Removal: Countershaft rear bearing**

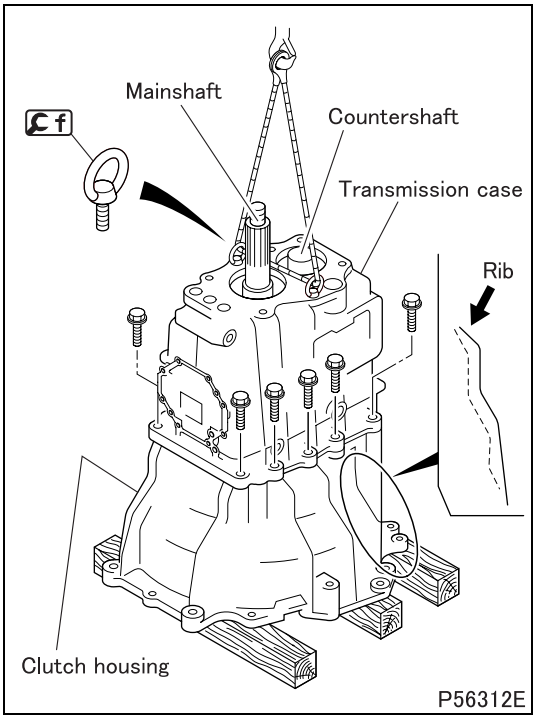

■ **Removal: Transmission case**

- Install [f] on the transmission case and make preparations for lifting it up with a crane.
- After removing the bolts, lift up the transmission case while hitting the rear ends of the countershaft and mainshaft and the rear ribs of the clutch housing with a plastic hammer to remove the transmission case.

CAUTION ⚠

- **Be sure to hit the ribs as illustrated because hitting other areas may break the clutch housing.**

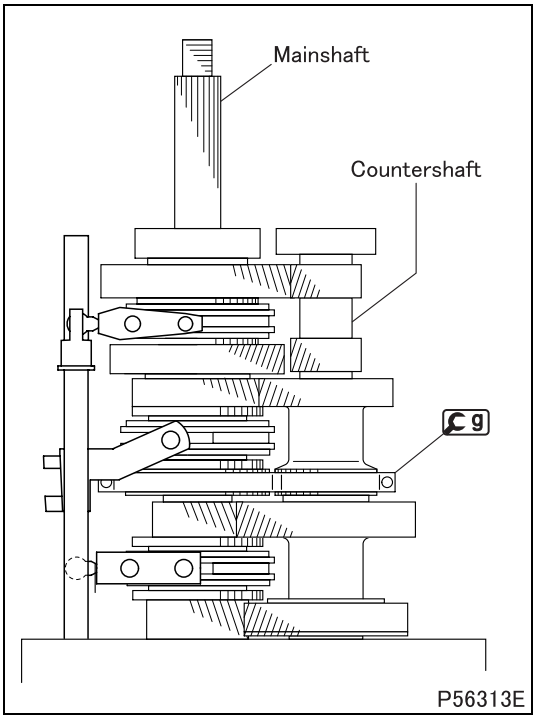

■ **Removal: Shift rail and shift fork, countershaft, drive pinion and mainshaft**

- Secure the countershaft and the 2nd gear area of the mainshaft with [g] for safety. Be sure to tighten the steel lifting band adequately enough to prevent it from coming undone, but not excessively.

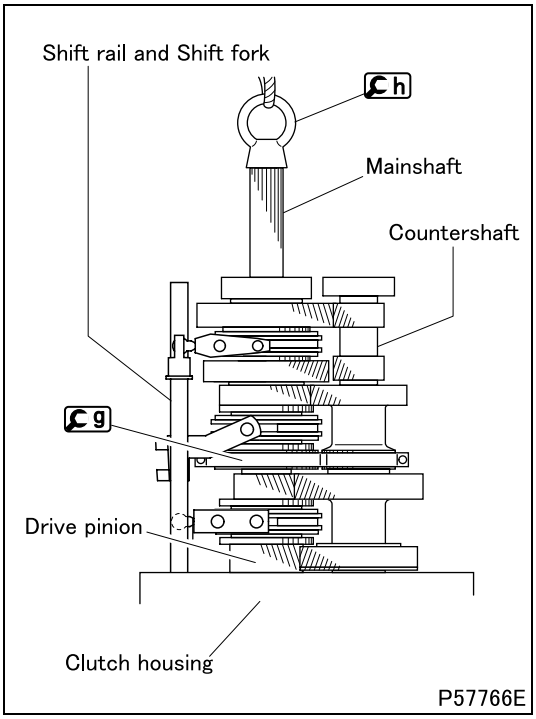

- Leave the countershaft and mainshaft secured with g.
- Install h on the mainshaft and make preparations for lifting it up with a crane.
- Secure the shift rail and shift fork with a rubber band to prevent it from coming undone from the mainshaft.
- Put a piece of wood on the clutch housing and lift it up while hitting it with a plastic hammer to remove.

CAUTION ⚠

- **When lifting up, be sure to support the drive pinion with your hand to prevent it from falling.**

◆Installation procedure◆

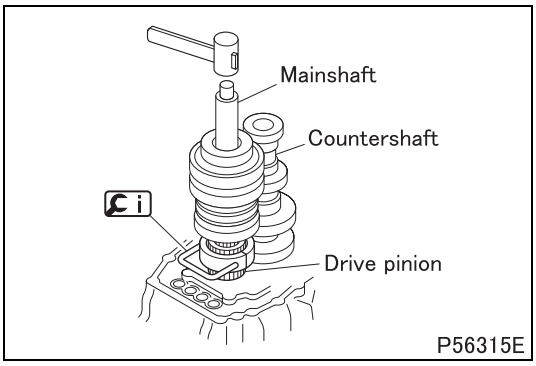

■ Installation: Shift rail and shift fork, countershaft, drive pinion and mainshaft

- When driving in the drive pinion, mainshaft and countershaft, install i to prevent the drive pinion and synchronizer of the mainshaft from sticking.

NOTE

- **Be sure to remove all the special tools used.**

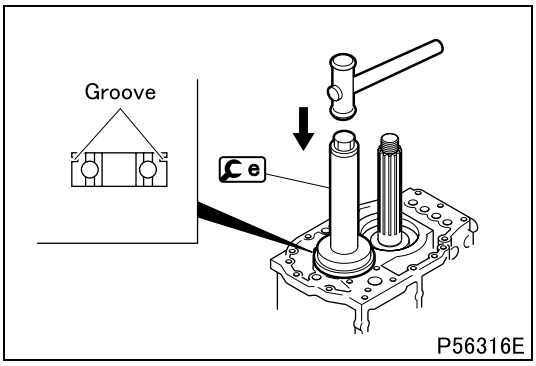

■ Installation: Countershaft rear bearing

- Install the countershaft rear bearing on the transmission case in the illustrated direction.

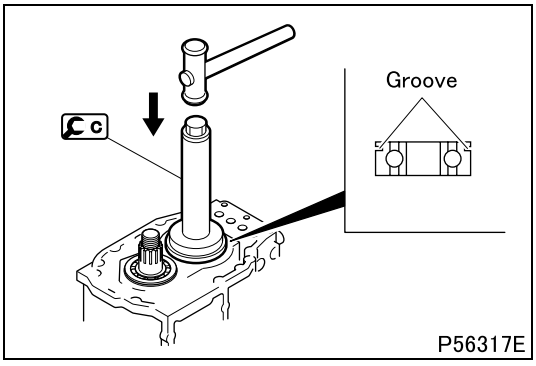

■ Installation: Mainshaft rear bearing

- Install the mainshaft rear bearing on the transmission case in the illustrated direction.

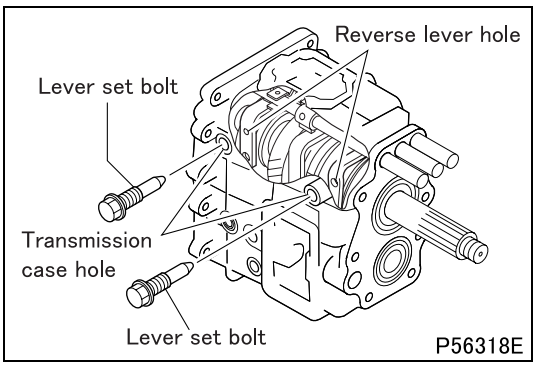

■ **Installation: Lever set bolt**

- Apply sealant to the thread areas of the lever set bolts to install them onto the transmission case holes and reverse lever hole.

M E M O

Shift Rail and Shift Fork <S5>

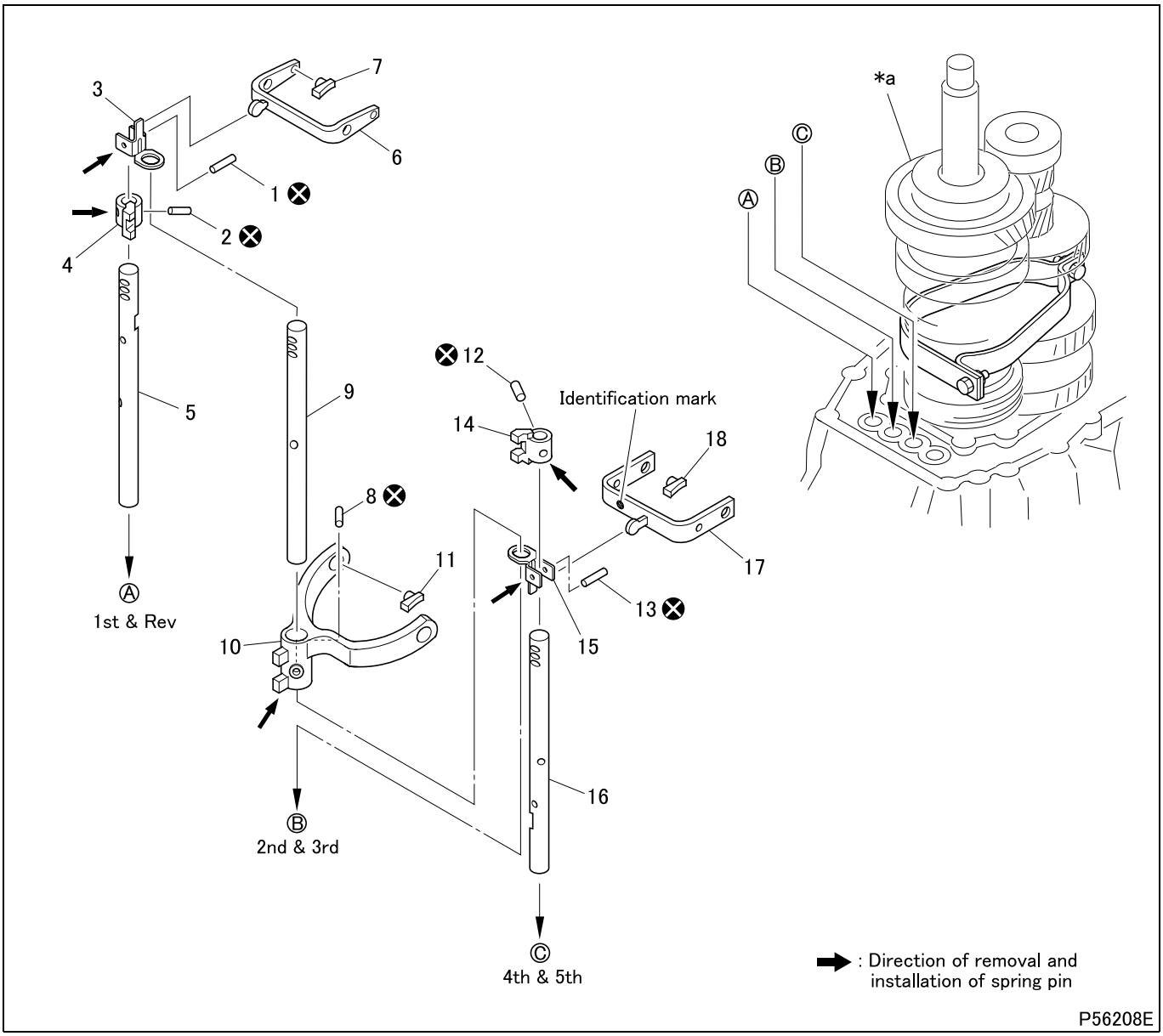

● Disassembly sequence

1 Spring pin
2 Spring pin
3 1st and reverse shift rail jaw B
4 1st and reverse shift rail jaw A
5 1st and reverse shift rail
6 1st and reverse lever
7 Gear shift fork piece
8 Spring pin
9 2nd and 3rd shift rail
10 2nd and 3rd shift fork
11 Gear shift fork piece
12 Spring pin
13 Spring pin
14 4th and 5th shift rail jaw A
15 4th and 5th shift rail jaw B
16 4th and 5th shift rail
17 4th and 5th reverse lever
18 Gear shift fork piece

***a**: Mainshaft
⊗: Non-reusable parts

● Assembly sequence

Follow the disassembly sequence in reverse.

NOTE

- **Place the synchronizer sleeve of the mainshaft in neutral position before installing the reverse lever on the mainshaft.**

Service standards (Unit: mm {in.})

Location	Maintenance item	Standard value	Limit	Remedy
5, 9, 16	Bend of shift rail	0.04 {0.0016} or less	0.05 {0.0020}	Correct or replace
7, 11, 18, *a	Clearance between gear shift fork piece and synchronizer sleeve	0.3 to 0.6 {0.012 to 0.024}	1.0 {0.039}	Replace

◆Inspection procedure◆

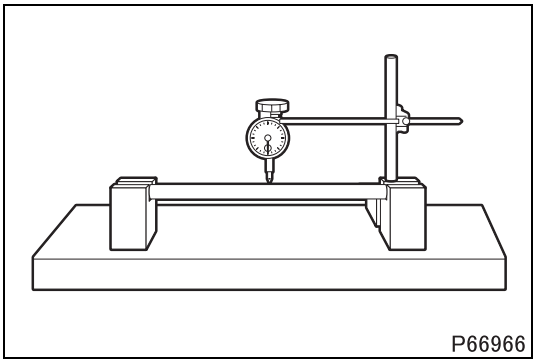
P66966

■ **Inspection: Bend of shift rail**

- Measure the extent of bending at the middle of each of shift rail.
- If any measured value exceeds the limit, correct or replace the shift rail.

NOTE

- **Give each of the shift rails one complete turn and read the dial gauge at that time. The extent of bending is half of the reading.**

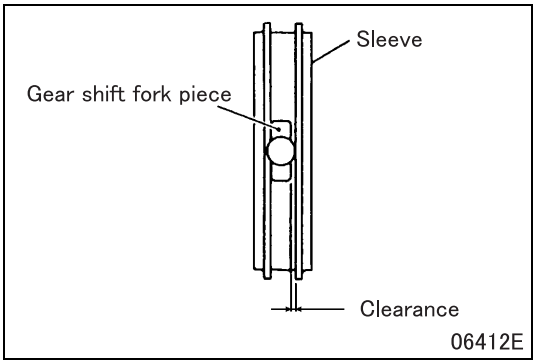

06412E

■ **Inspection: Clearance between gear shift fork piece and synchronizer sleeve of mainshaft**

- If the measured value exceeds the limit, replace defective parts.

◆Installation procedure◆

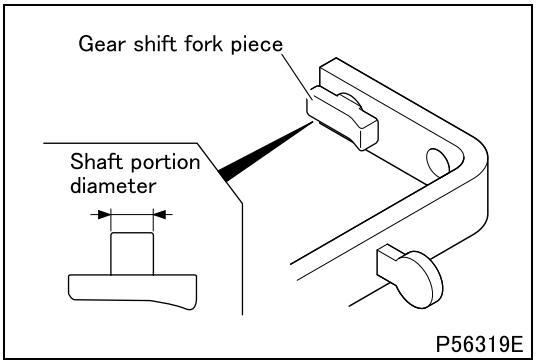

P56319E

■ **Installation: Gear shift fork piece**

- Install the gear shift fork piece on the reverse lever as shown in the illustration after checking that its shaft diameter is appropriate.

	Shaft portion diameter (mm {in.})
1st & Rev	10 {0.39}
2nd & 3rd, 4th & 5th	15 {0.59}

CAUTION ⚠

- **Never fail to check the shaft diameter of the gear shift fork piece. Installation of any gear shift fork piece with a smaller diameter shaft is possible but not permitted.**

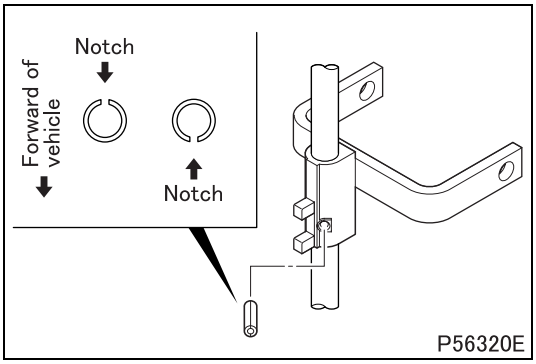

■ **Installation: Spring pin**

- Install the spring pin in the illustrated direction (the spring pin notch to be positioned forward or rearward of the vehicle). When installing the spring pin, leave 0 to 0.5 mm {0 to 0.020 in.} outside from each shift rail or each shift rail jaw.

CAUTION ⚠

- **Drive the spring pin carefully not to impose too much load on each shift rail and each shift rail jaw.**

M E M O

Shift Rail and Shift Fork <S6>

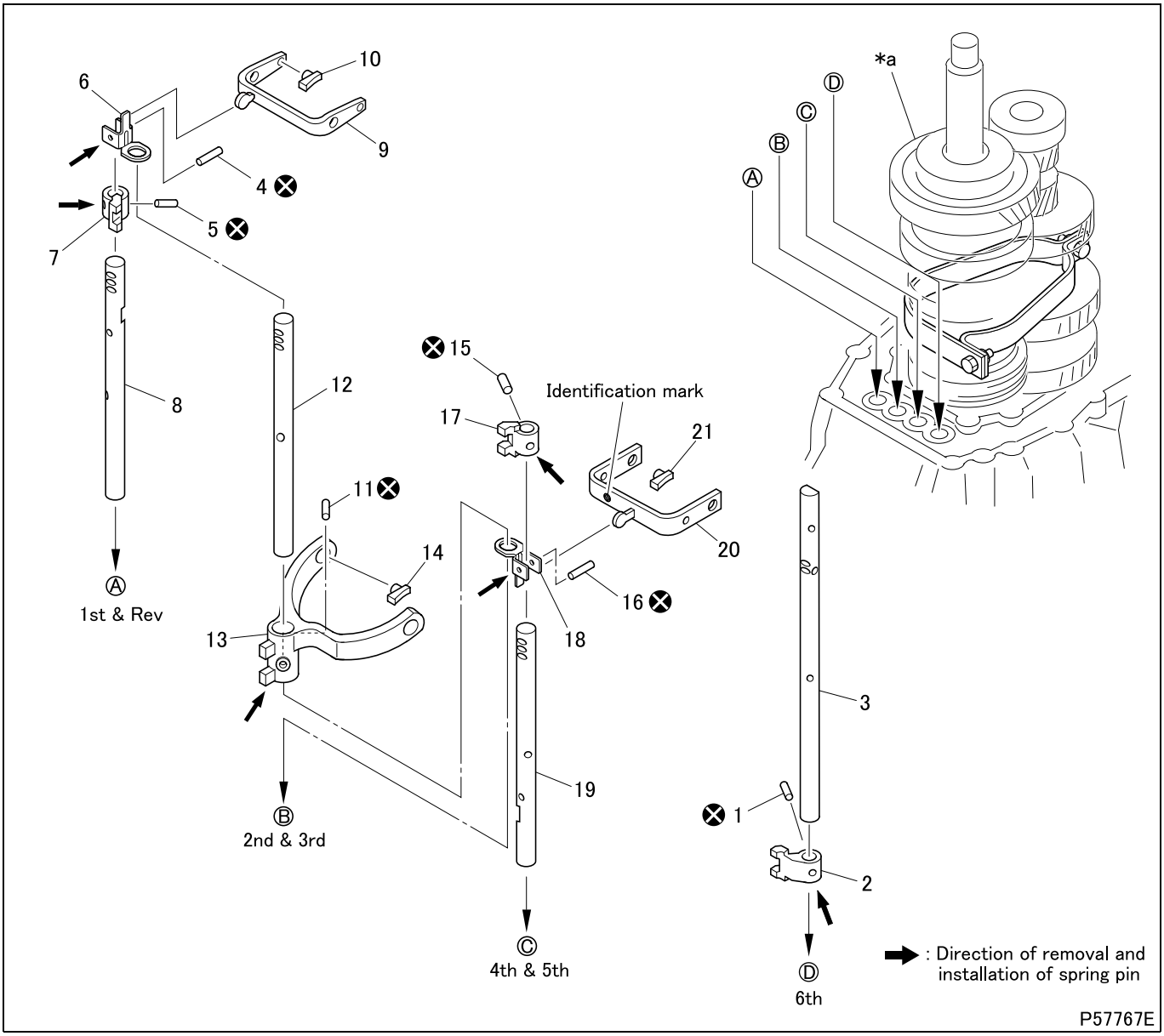

● Disassembly sequence

1 Spring pin
2 6th shift rail jaw
3 6th shift rail
4 Spring pin
5 Spring pin
6 1st and reverse shift rail jaw B
7 1st and reverse shift rail jaw A
8 1st and reverse shift rail
9 1st and reverse lever
10 Gear shift fork piece
11 Spring pin
12 2nd and 3rd shift rail
13 2nd and 3rd shift fork
14 Gear shift fork piece
15 Spring pin
16 Spring pin
17 4th and 5th shift rail jaw A
18 4th and 5th shift rail jaw B
19 4th and 5th shift rail
20 4th and 5th reverse lever
21 Gear shift fork piece

***a**: Mainshaft
⊗: Non-reusable parts

● Assembly sequence

Follow the disassembly sequence in reverse.

NOTE

- **Place the synchronizer sleeve of the mainshaft in neutral position before installing the reverse lever on the mainshaft.**

Service standards (Unit: mm {in.})

Location	Maintenance item	Standard value	Limit	Remedy
3, 8, 12, 19	Bend of shift rail	0.04 {0.0016} or less	0.05 {0.0020}	Correct or replace
10, 14, 21, *a	Clearance between gear shift fork piece and synchronizer sleeve	0.3 to 0.6 {0.012 to 0.024}	1.0 {0.039}	Replace

◆Inspection procedure◆

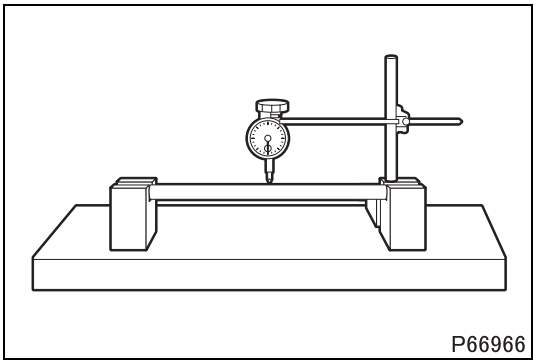
P66966

■ **Inspection: Bend of shift rail**

- Measure the extent of bending at the middle of each of shift rail.
- If any measured value exceeds the limit, correct or replace the faulty shift rails.

NOTE

- **Give each of the shift rails one complete turn and read the dial gauge at that time. The extent of bending is half of the reading.**

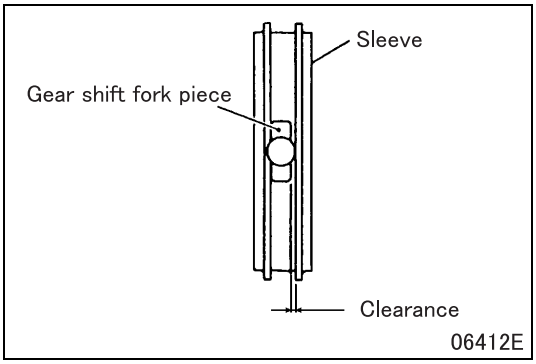

06412E

■ **Inspection: Clearance between gear shift fork piece and synchronizer sleeve of mainshaft**

- If the measured value exceeds the limit, replace defective parts.

◆Installation procedure◆

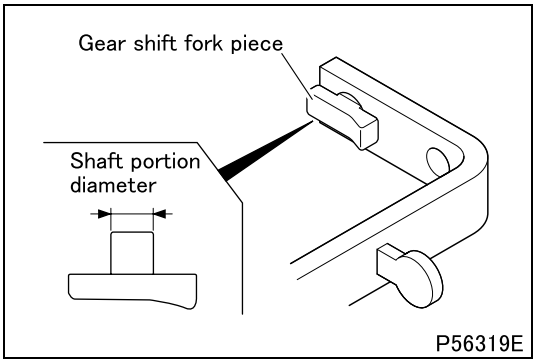

P56319E

■ **Installation: Gear shift fork piece**

- Install the gear shift fork piece on the reverse lever as shown in the illustration after checking that its shaft diameter is appropriate.

	Shaft portion diameter (mm {in.})
1st & Rev	10 {0.39}
2nd & 3rd, 4th & 5th	15 {0.59}

CAUTION ⚠

- **Never fail to check the shaft diameter of the gear shift fork piece. Installation of any gear shift fork piece with a smaller diameter shaft is possible but not permitted.**

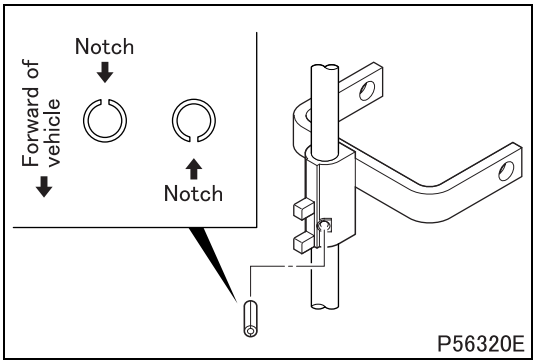

■ **Installation: Spring pin**

- Install the spring pin in the illustrated direction (the spring pin notch to be positioned forward or rearward of the vehicle). When installing the spring pin, leave 0 to 0.5 mm {0 to 0.020 in.} outside from each shift rail or each shift rail jaw.

CAUTION ⚠

- **Drive the spring pin carefully not to impose too much load on each shift rail and each shift rail jaw.**

M E M O

DRIVE PINION

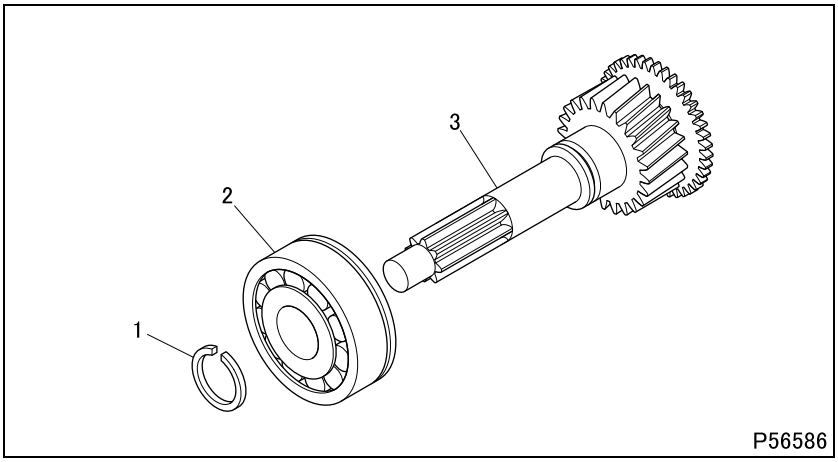

● **Disassembly sequence**

1 Snap ring
2 Drive pinion bearing
3 Drive pinion

● **Assembly sequence**

Follow the disassembly sequence in reverse.

Special tools (Unit: mm {in.})

Mark	Tool name and shape	Part No.	Application
a	Snap ring expander 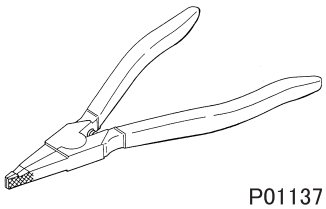 P01137	MH061268	Removal and installation of snap ring
b	Bearing puller and installer A: ϕ92.5 {3.64} B: 57.5 {2.26} 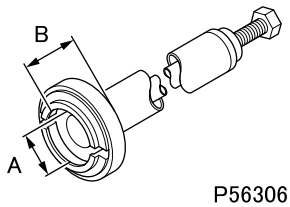 P56306	MH062697	Removal and installation of drive pinion bearing
c	Bearing puller and installer 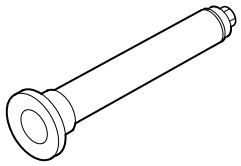 P49555		

◆ **Removal procedure** ◆

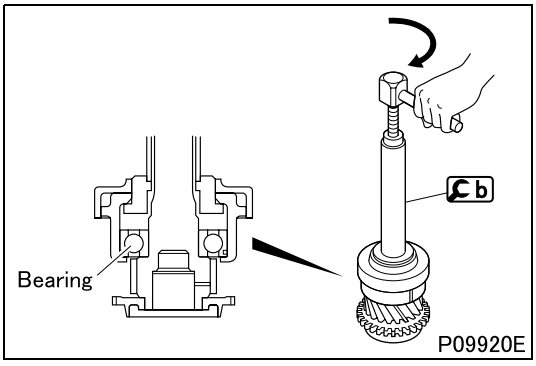

■ **Removal: Drive pinion bearing**

◆Installation procedure◆

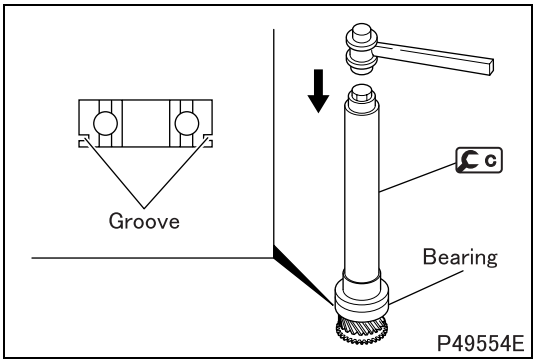

■ **Installation: Drive pinion bearing**

- Install the drive pinion bearing on the drive pinion in the illustrated direction.

MAINSHAFT

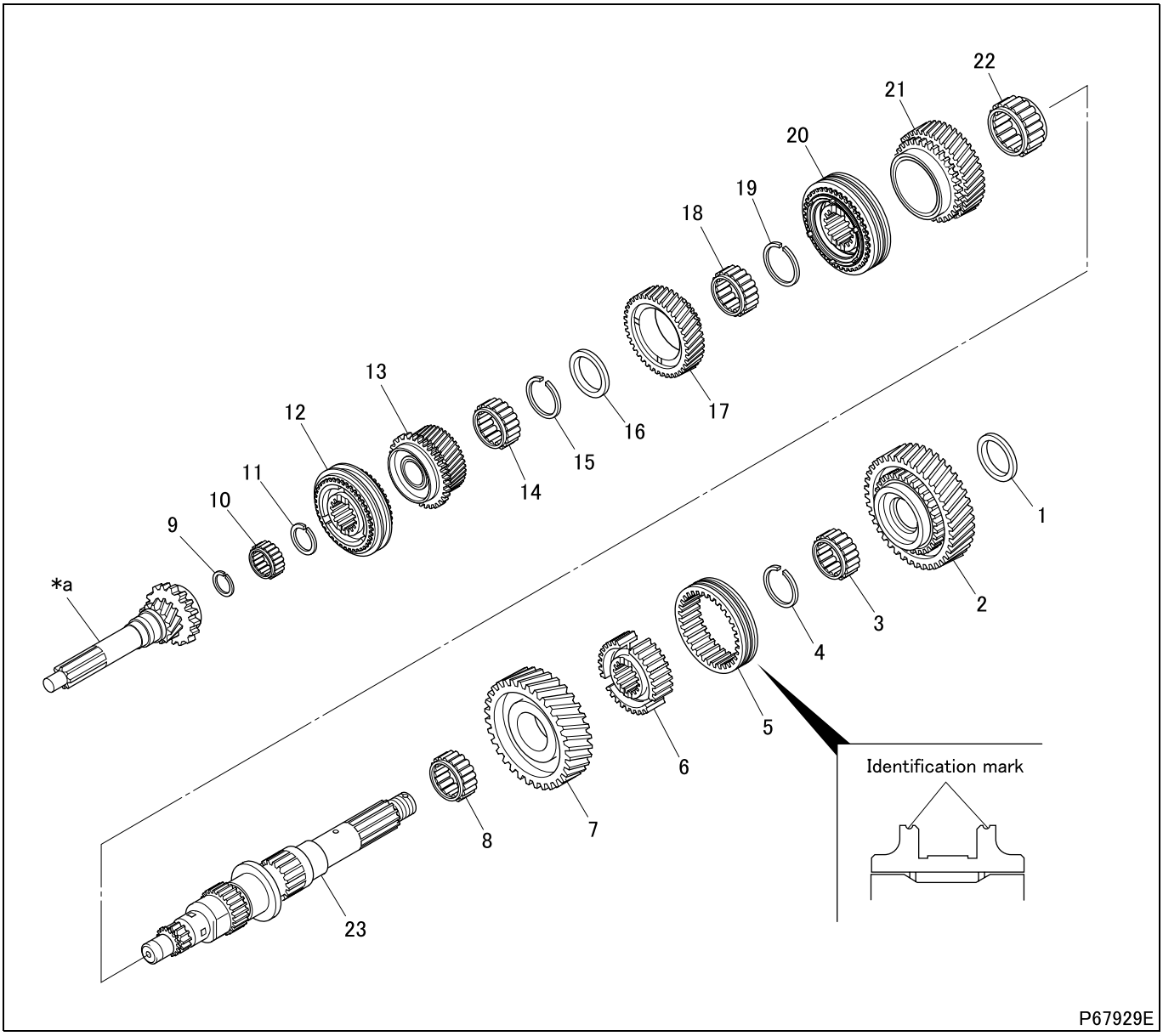

● **Disassembly sequence**

1 1st gear thrust washer
2 1st gear
3 Needle bearing
4 Snap ring
5 Synchronizer sleeve
6 Synchronizer hub
7 Reverse gear
8 Needle bearing
9 Snap ring
10 Pilot bearing
11 Snap ring
12 4th and 5th synchronizer (See later section.)
13 5th gear
14 Needle bearing
15 Snap ring
16 3rd gear thrust washer
17 3rd gear
18 Needle bearing
19 Snap ring
20 2nd and 3rd synchronizer (See later section.)
21 2nd gear
22 Needle bearing
23 Mainshaft

***a**: Drive pinion

● **Assembly sequence**

Follow the disassembly sequence in reverse.

Service standards (Unit: mm {in.})

Location	Maintenance item		Standard value	Limit	Remedy
–	End play	1st gear	0.15 to 0.46 {0.0059 to 0.018}	0.7 {0.028}	Replace
		2nd gear	0.15 to 0.61 {0.0059 to 0.024}	0.8 {0.031}	
		3rd gear	0.15 to 0.46 {0.0059 to 0.018}	0.7 {0.028}	
		5th gear	0.2 to 0.56 {0.0079 to 0.022}	0.8 {0.031}	
		Reverse gear	0.15 to 0.46 {0.0059 to 0.018}	0.7 {0.028}	
–	Play in the diameter direction	1st gear	0.02 to 0.05 {0.0079 to 0.0020}	0.12 {0.0047}	Replace
		2nd gear	0.02 to 0.05 {0.0079 to 0.0020}	0.12 {0.0047}	
		3rd gear	0.02 to 0.06 {0.0079 to 0.0024}	0.12 {0.0047}	
		5th gear	0.05 to 0.09 {0.0020 to 0.0035}	0.2 {0.0079}	
		Reverse gear	0.04 to 0.07 {0.0016 to 0.0028}	0.12 {0.0047}	
12, 13	Clearance between synchronizer ring of 4th and 5th synchronizer and 5th gear		1.23 to 1.47 {0.048 to 0.058}	0.5 {0.020}	Replace
12, *a	Clearance between synchronizer ring of 4th and 5th synchronizer and drive pinion		1.23 to 1.47 {0.048 to 0.058}	0.5 {0.020}	Replace
17, 20	Clearance between 3rd gear and synchronizer outer ring of 2nd and 3rd synchronizer		1.16 to 1.74 {0.046 to 0.069}	0.7 {0.028}	Replace
20, 21	Clearance between synchronizer outer ring of 2nd and 3rd synchronizer and 2nd gear		1.16 to 1.74 {0.046 to 0.069}	0.7 {0.028}	Replace

Special tools

Mark	Tool name and shape	Part No.	Application
a	Snap ring expander 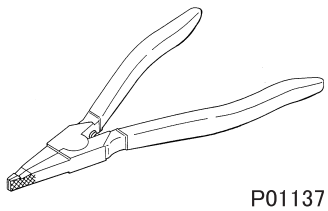 P01137	MH061268	Removal and installation of snap ring

◆Work before removal◆

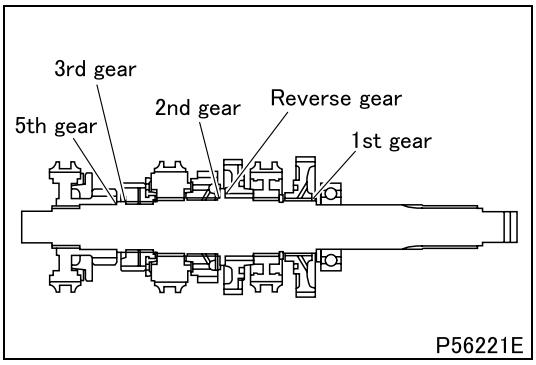

■ Inspection: End play of gears

- If the measured value exceeds the limit, replace defective parts.

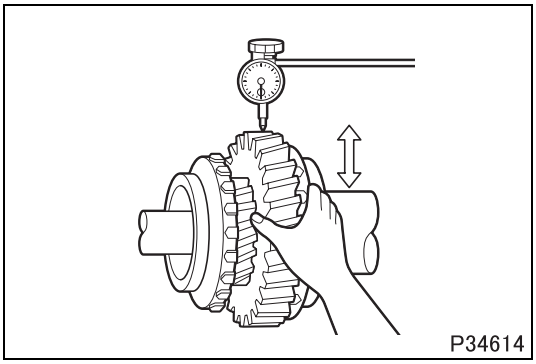

■ **Inspection: Play of gears in diameter direction**

- If the measured value exceeds the limit, replace defective parts.

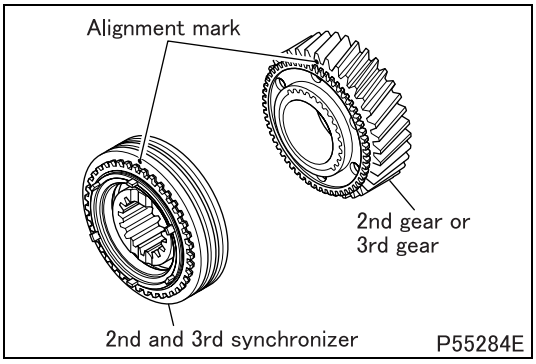

■ **Alignment marks: 2nd gear, 2nd and 3rd synchronizer and 3rd gear**

- Put alignment marks on the synchronizer sleeve of the 2nd and 3rd synchronizer, 2nd gear and 3rd gear, each at one location before disassembly.

◆Inspection procedure◆

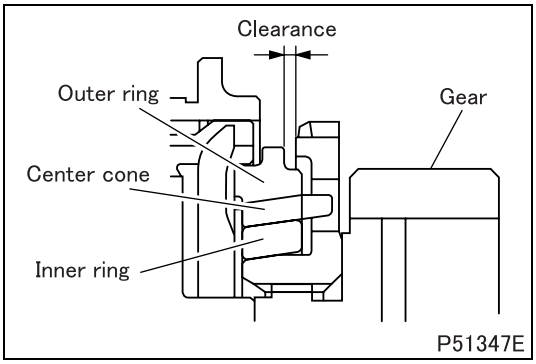

■ **Inspection: Clearance between synchronizer outer ring of 2nd and 3rd synchronizer and 2nd gear or 3rd gear**

- When measuring the clearance, press each ring and the center cone evenly against the gear and measure all around the circumference.
- If the measured value is less than the limit, replace defective parts.

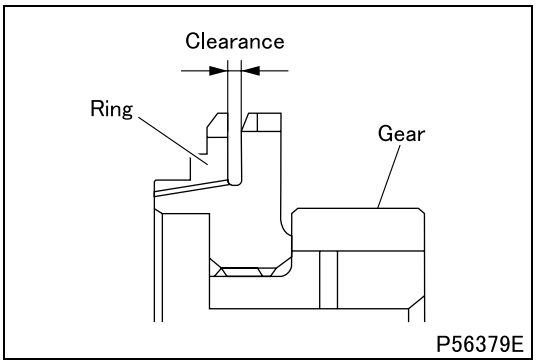

■ **Inspection: Clearance between synchronizer ring of 4th and 5th synchronizer and 5th gear or drive pinion**

- When measuring the clearance, press each ring evenly against the gear and measure all around the circumference.
- If the measured value is less than the limit, replace defective parts.

M E M O

4th and 5th Synchronizer

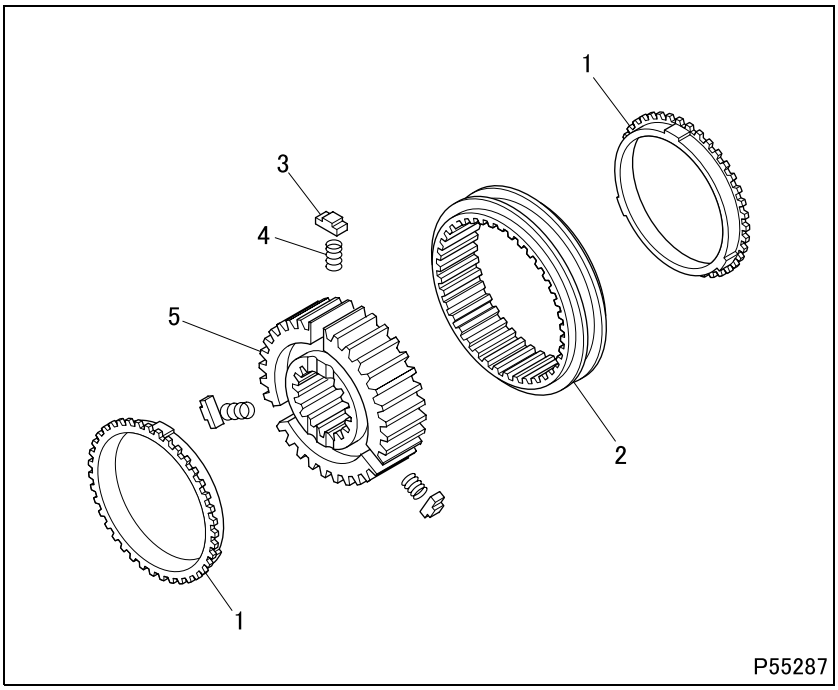

● Disassembly sequence

1 Synchronizer ring
2 Synchronizer sleeve
3 Shifting plunger
4 Shifting plunger spring
5 Synchronizer hub

● Assembly sequence

Follow the disassembly sequence in reverse.

Service standards (Unit: mm {in.})

Location	Maintenance item	Standard value	Limit	Remedy
1, 5	Clearance between protrusions of synchronizer ring and synchronizer hub groove	3.0 to 3.3 {0.12 to 0.13}	4.0 {0.16}	Replace

◆Work before removal◆

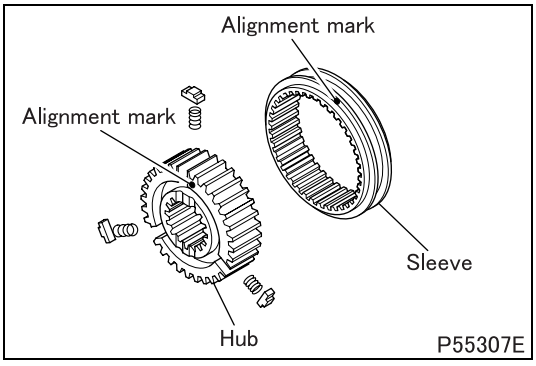

■ **Alignment marks: Synchronizer sleeve and synchronizer hub**

- Put alignment marks on the synchronizer ring and synchronizer hub, each at one location before disassembly.

◆Inspection procedure◆

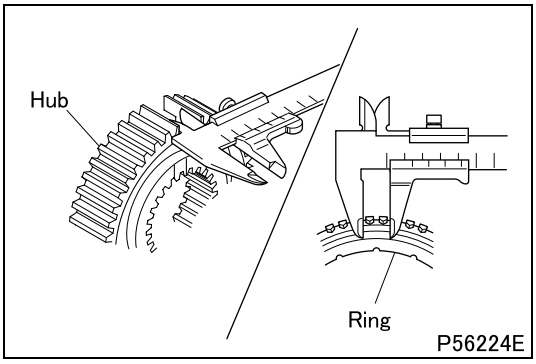

■ **Inspection: Clearance between synchronizer ring or synchronizer outer ring and synchronizer hub**

- If the measured value exceeds the limit, replace defective parts.

◆Installation procedure◆

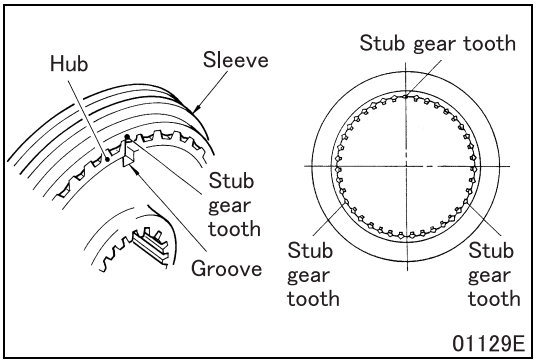

■ Installation: Synchronizer sleeve and synchronizer hub

- When replacing the synchronizer sleeve or synchronizer hub with a new one, align the three keyways of the synchronizer hub with three locations of the stub gear tooth of the synchronizer sleeve to install.

2nd and 3rd Synchronizer

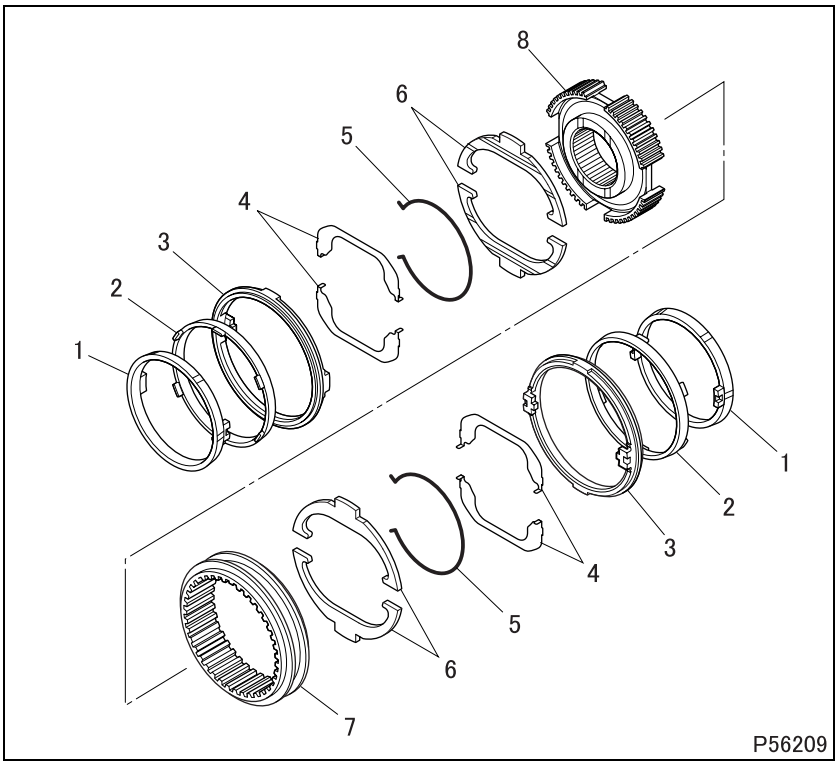

● Disassembly sequence

1 Synchronizer inner ring
2 Synchronizer center cone
3 Synchronizer outer ring
4 Synchronizer plate
5 Synchronizer spring
6 Synchronizer lever
7 Synchronizer sleeve
8 Synchronizer hub

● Assembly sequence

Follow the disassembly sequence in reverse.

Service standards (Unit: mm {in.})

Location	Maintenance item	Standard value	Limit	Remedy
3	Width of claws of synchronizer outer ring	13.8 to 14.0 {0.54 to 0.55}	13 {0.51}	Replace

◆Work before removal◆

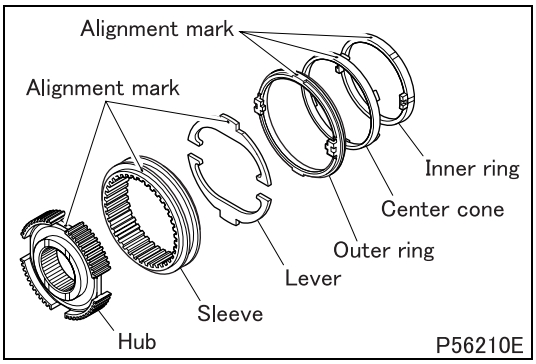

■ Alignment marks: Synchronizer inner ring, center cone, outer ring, lever and hub

- Put alignment marks on the synchronizer inner ring, center cone, outer ring, lever and hub, each at one location, aligning with the alignment mark put on the synchronizer sleeve before disassembly.

◆Inspection procedure◆

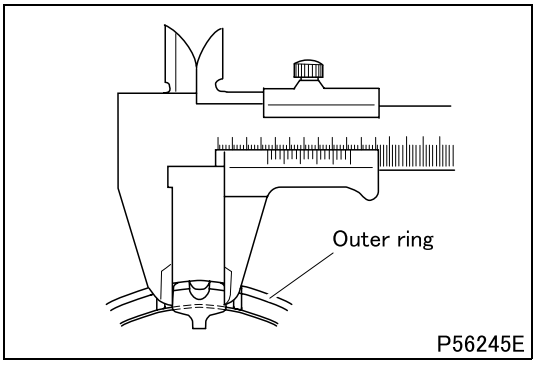

■ Inspection: Width of claws of synchronizer outer ring

- If the measured value exceeds the limit, replace defective parts.

◆Installation procedure◆

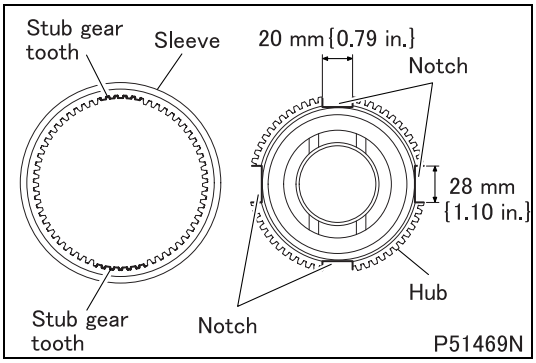

■ **Installation: Synchronizer sleeve and synchronizer hub**

- When replacing the synchronizer sleeve or synchronizer hub with a new one, align the stub gear tooth (2 locations) of the synchronizer sleeve and the notch (2 locations) of the synchronizer hub to install.
- Install the stub gear teeth, aligning with the notches with narrow width (20 mm {0.79 in.}) of the synchronizer hub.

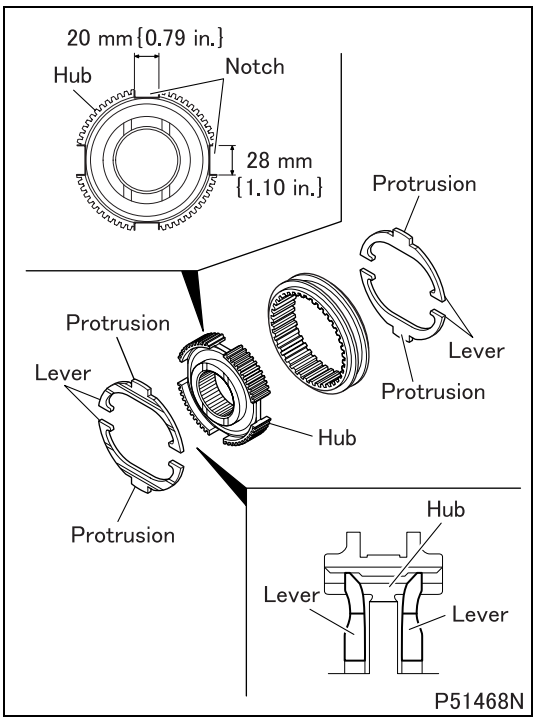

■ **Installation: Synchronizer lever**

- Install the synchronizer lever on the synchronizer hub in the illustrated direction.
- To install the synchronizer lever, install its protrusions on the notches with narrow width (20 mm {0.79 in.}) of the synchronizer hub.

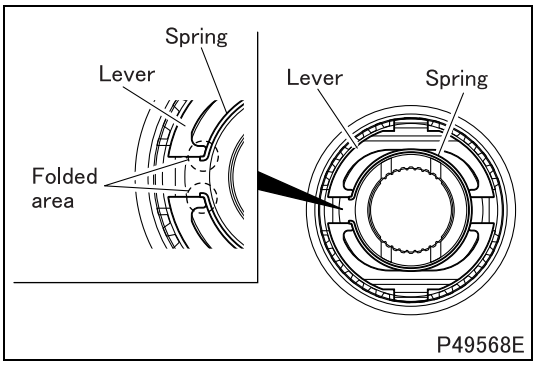

■ **Installation: Synchronizer spring**

- Hang the folded area on the synchronizer lever to install the synchronizer spring.

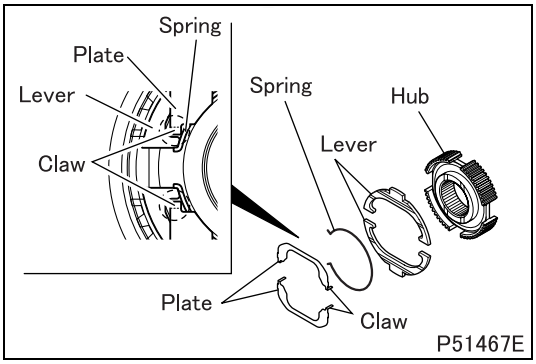

■ **Installation: Synchronizer plate**

- Install the synchronizer plate facing the claws toward the synchronizer hub so that it may be inserted between the synchronizer lever and synchronizer spring.

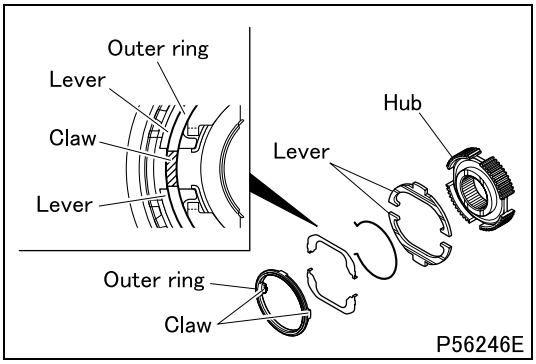

■ **Installation: Synchronizer outer ring**

- Install the synchronizer ring facing the claws toward the synchronizer hub so that it may be inserted between the two synchronizer levers.

M E M O

COUNTERSHAFT

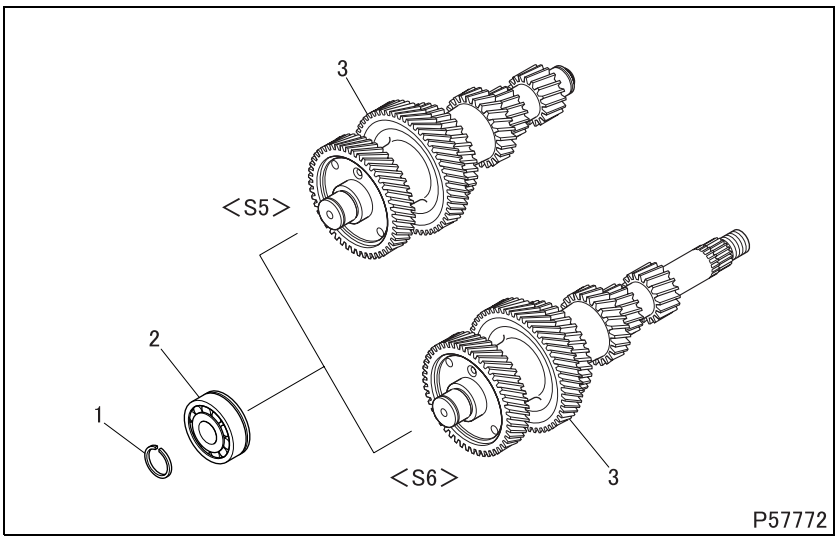

● **Disassembly sequence**

1 Snap ring
2 Countershaft front bearing
3 Countershaft gear

● **Assembly sequence**

Follow the disassembly sequence in reverse.

Special tools (Unit: mm {in.})

Mark	Tool name and shape	Part No.	Application
a	Bearing puller and installer A: ϕ72 {2.83} 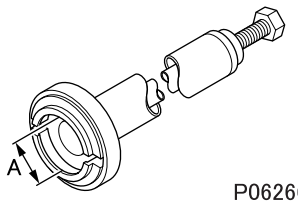	MH062696	Removal of countershaft front bearing
b	Bearing puller and installer 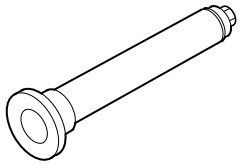		Installation of countershaft front bearing
c	Snap ring expander 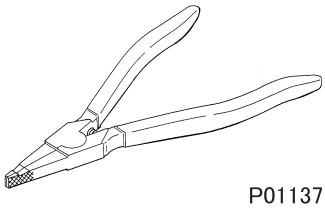	MH061268	Removal and installation of snap ring

◆Removal procedure◆

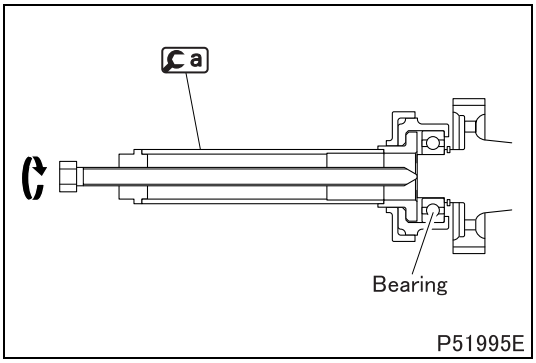

■ Removal: Countershaft front bearing

◆Installation procedure◆

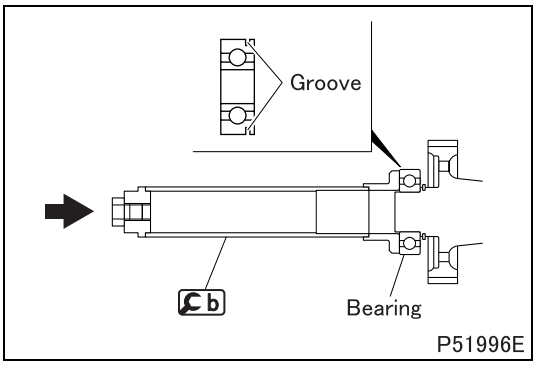

■ Installation: Countershaft front bearing

- Install the countershaft front bearing on the countershaft in the illustrated direction.

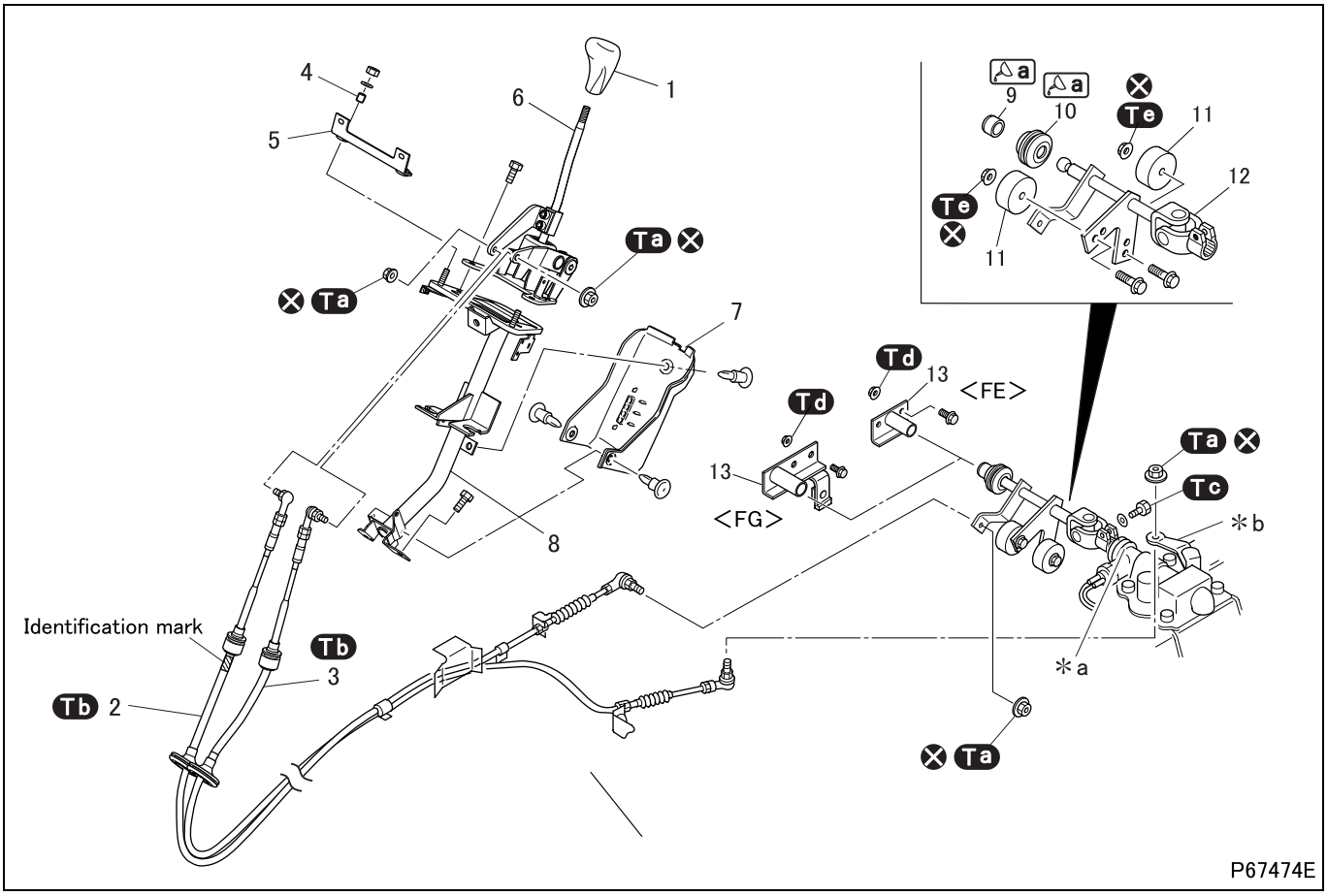

● **Removal sequence**

1 Gear shift lever knob
2 Shift cable
3 Select cable
4 Collar
5 Instrument panel bracket
6 Gear shift lever (See later section.)
7 Gear shift lever cover
8 Gear shift lever bracket
9 Cross shaft bushing
10 Cross shaft boot
11 Counter weight
12 Cross shaft
13 Cross shaft bracket

***a**: Torsion shaft
***b**: Gear selector lever
⊗: Non-reusable parts

● **Installation sequence**

Follow the removal sequence in reverse.

NOTE

- **All the nuts used for securing the shift and select cables are coated with thread locking product. These nuts must be replaced with new ones whenever they are loosened or removed.**
- **The counter weight mounting nut is coated with thread locking product. The nut must be replaced with a new one whenever it is loosened or removed.**

Tightening torque (Unit: N·m {ft.lbs, kgf·m})

Mark	Parts to be tightened		Tightening torque	Remarks
Ta	Nut (shift cable mounting)		19 to 24 {14 to 18, 1.9 to 2.4}	–
	Nut (select cable mounting)			
Tb	Shift cable	Lock nut on transmission side	59 to 83 {44 to 61, 6 to 8.5}	–
	Select cable	Lock nut on transmission side		
Tc	Bolt (cross shaft mounting)		15 to 20 {11 to 15, 1.5 to 2.0}	–
Td	Nut (cross shaft bracket mounting)		59 to 78 {44 to 61, 6 to 8}	–
Te	Nut (cross shaft weight mounting)		9 to 14 {6.6 to 10, 0.9 to 1.4}	–

Lubricant and/or sealant

Mark	Points of application	Specified lubricant and/or sealant	Quantity
a	Internal circumference and circumference of cross shaft bushing	Wheel bearing grease [NLGI No. 2 (Li soap)]	As required
	Filling in cross shaft boot		

◆Installation procedure◆

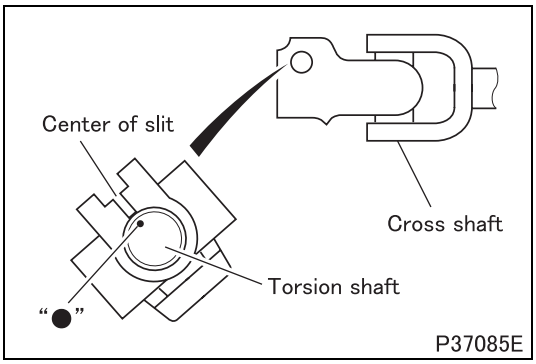

■ Installation: Cross shaft

Insert the cross shaft so that the punch mark "●" of the torsion shaft on the transmission is positioned at the center of the slit of the cross shaft.

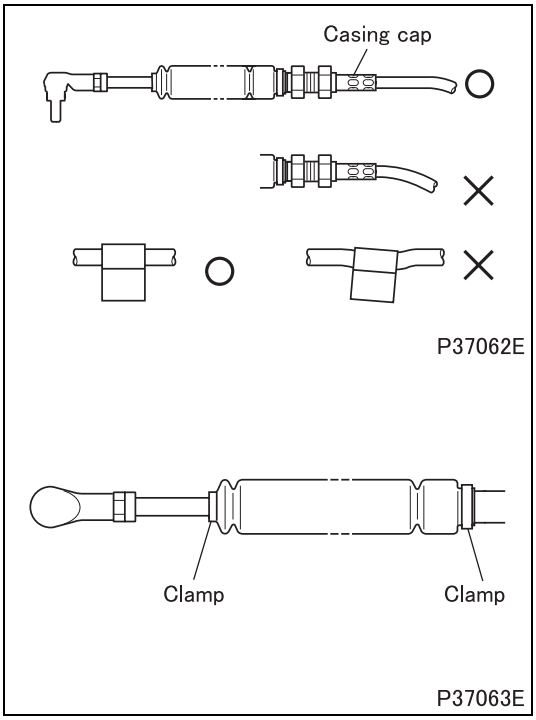

■ Installation: Shift cable and select cable

CAUTION ⚠

- **Install the casing cap portion as a straight line.**
- **The radius of the cable bend shall be 200 mm {7.87 in.} or more.**
- **Make sure that there is no obstruction in movement of the cable.**
- **Install the clamp at right angles to the cable.**
- **Do not twist clamps at either ends of the boot.**
- **Check for the identification mark on the shift cable.**
- **The twist angle of ball joints at both ends of the cables shall be 15 degrees or less.**
- **Make sure that the ball joints face the correct direction. Installing them in the wrong direction can remarkably reduce durability of the cables.**

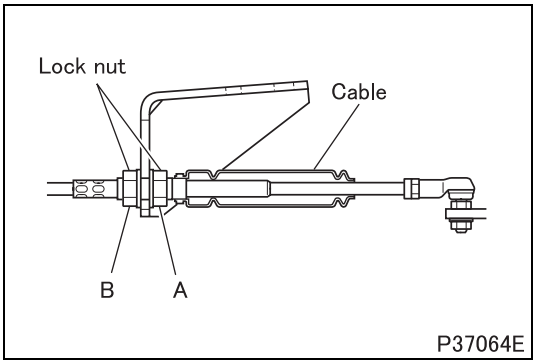

- Connect the shift cable and select cable with each clamp temporarily tightened.
- Permanently tighten the lock nuts and each clamp of the cables in this order with no excessive force applied to the shift cable and select cable.

NOTE

- **When tightening lock nuts, tighten B without moving A on the transmission.**

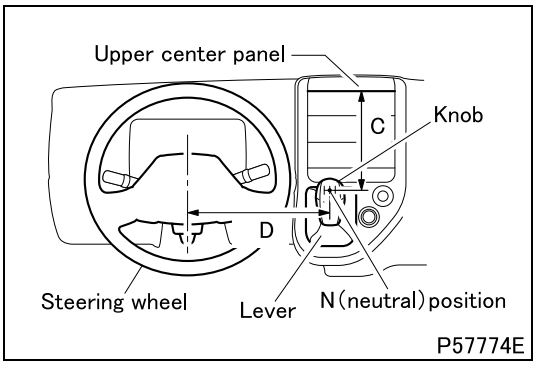

- Make sure when operating the gear shift lever that it shifts and selects smoothly each position.
- Adjust the gear shift lever with the lock nut on the transmission and turn buckle or clevis on the gear shift lever.

  Fore-and-aft direction C: Distance from the upper center panel

  Right-and-left direction D: Distance from the steering wheel center

  N (neutral) position on the 2nd-3rd line of the gear shift lever <S5>

  N (neutral) position on the 4th-5th line of the gear shift lever <S6>

	Fore-and-aft direction C (mm {in.})	Right-and-left direction D (mm {in.})
S5	274 ± 15 {10.8 ± 0.59}	303 ± 5 {11.9 ± 0.20}
S6		333 ± 5 {13.1 ± 0.20}

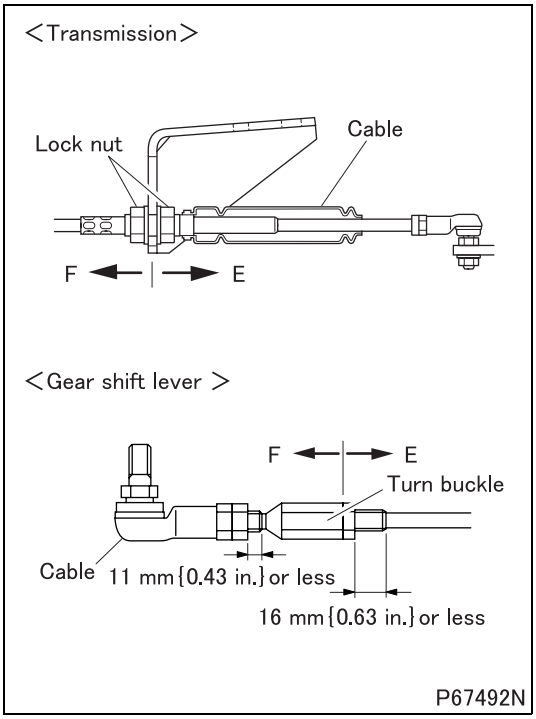

	Shift cable	Select cable
Tilt forward	E	–
Tilt backward	F	–
Tilt to the right	–	F
Tilt to the left	–	E

E: Move the lock nut and turn buckle to the transmission direction.

F: Move the lock nut and turn buckle to the gear shift lever direction.

NOTE

- **When adjusting cable length, do not move the torsion shaft and gear selector lever from the neutral position.**
- **When adjusting the select position, align N (neutral) position of the transmission with N (neutral) position of the gear shift lever.**

Gear Shift Lever

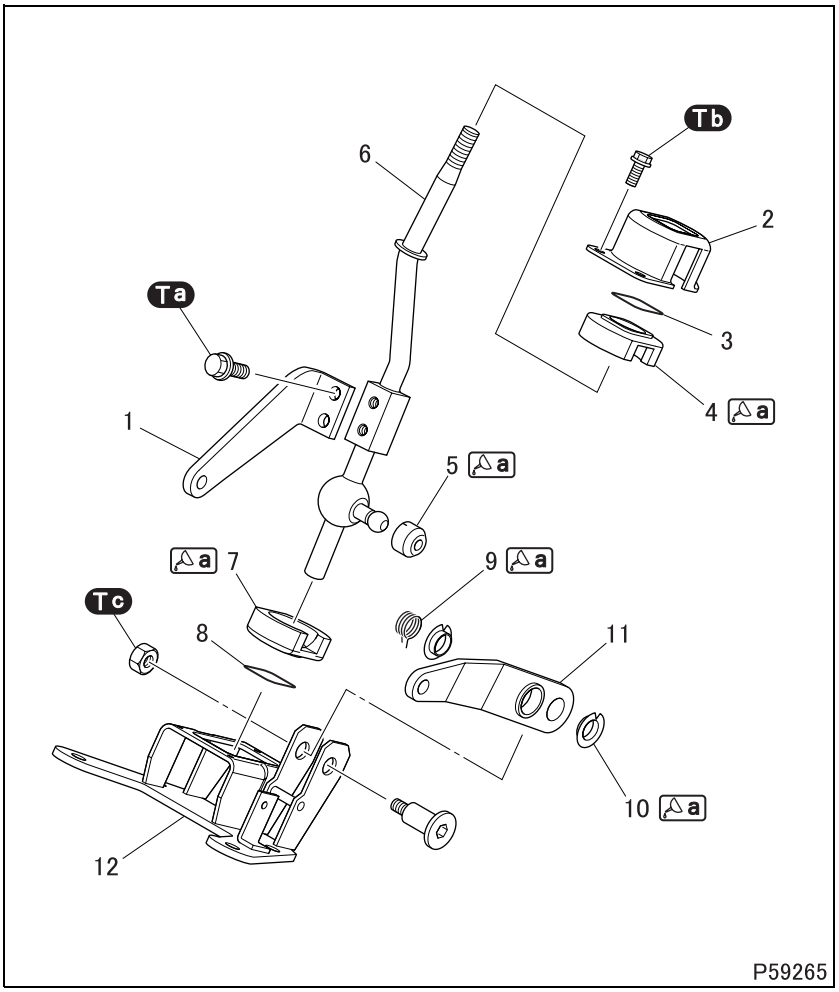

● Disassembly sequence

1 Shift lever
2 Lever support
3 Insulator
4 Case
5 Bushing
6 Shift rod
7 Case
8 Insulator
9 Return spring
10 Shift bushing
11 Selector lever
12 Plate

● Assembly sequence

Follow the disassembly sequence in reverse.

Tightening torque (Unit: N·m {ft.lbs, kgf·m})

Mark	Parts to be tightened	Tightening torque	Remarks
Ta	Bolt (shift lever mounting)	19 to 28 {14 to 20, 1.9 to 2.8}	–
Tb	Bolt (lever support mounting)	4 to 6 {3.0 to 4.4, 0.4 to 0.6}	–
Tc	Nut (selector lever mounting)	10 to 15 {7.4 to 11, 1 to 1.5}	–

Lubricant and/or sealant

Mark	Points of application	Specified lubricant and/or sealant	Quantity
a	Sliding area of case and shift rod	Multipurpose grease [NLGI No. 2 (Li soap)]	As required
	Internal circumference and circumference of bushing		
	Entire return spring		
	Internal circumference and circumference of shift bushing		

BEARING PULLER AND INSTALLER

- Bearing pullers and installers are special tools used for removing and installing bearings listed in the table below which are used in this group.
- For each puller (for removing) and each installer (for installing), use the components of the bearing pullers and installers in combination.

Application / Component			Drive pinion bearing		Mainshaft rear bearing		Countershaft front bearing		Countershaft rear bearing			6th gear sleeve <S6>
Bearing puller and installer	Component	Part No.	Puller	Installer	Puller	Installer	Puller	Installer	Puller S5	Puller S6	Installer	Installer
MH062696	Adapter	MH062590										O
	Plug	03726-81017						O			O	O
	Bolt	MH062700					O		O			
	Body	MH062701					O	O	O		O	O
	Protector	MH061306					O		O			
	Countershaft bearing claw	03726-81012							O			
	Bearing claw	MH062707					O					
	Mainshaft bearing claw	MH061305										
	Bearing claw	MH062706										
MH062697	Bearing claw	MH062589								O		
	Plug	03726-81017		O		O						
	Bolt	MH062700	O		O					O		
	Body	MH062702	O	O	O	O				O		
	Protector	ME624229	O		O					O		
	Mainshaft bearing claw	ME624226			O							
	Bearing claw	MH062636	O									

Group 23

Automatic Transmission

Table of Contents

Back

Home

MITSUBISHI FUSO TRUCK OF AMERICA, Inc.

Pub.No.TWSE0805-23

INDEX

SPECIFICATIONS 23-2

STRUCTURE AND OPERATION
1. Overview 23-3
2. Electronic Control System 23-9
3. Electronic Control Unit Connection Diagram 23-14

TROUBLESHOOTING
1. Diagnosis Procedure.....23-16
2. Diagnostic Precautions 23-16
3. Inspections Based on Diagnosis Codes.....23-17
4. Multi-Use Tester Service Data 23-315
5. Possible Causes of Symptoms 23-318

ON-VEHICLE INSPECTION AND ADJUSTMENT
1. Inspection of Automatic Transmission Oil Leakage 23-322
2. Check for Looseness in Automatic Transmission Mounting Bolts 23-322
3. Inspection of Play in Companion Flange and Looseness in Lock Nut 23-323
4. Inspection of Automatic Transmission Fluid 23-323
5. Replacement of Automatic Transmission Fluid 23-324
6. Stall Test 23-326
7. Time Lag Test 23-327
8. Line Pressure Test 23-328
9. Road Test 23-330
10. Dealer Adjust 23-331

REMOVAL AND INSTALLATION OF AUTOMATIC TRANSMISSION 23-334

PARKING BRAKE 23-340

AUTOMATIC TRANSMISSION CONTROL 23-342

OIL COOLER
<EXCEPT CREW CAB> 23-352
<CREW CAB> 23-354

REPLACEMENT OF PARTS OF AUTOMATIC TRANSMISSION MAIN BODY 23-356

INSPECTION OF ELECTRICAL EQUIPMENT 23-360

INSTALLED LOCATIONS OF PARTS 23-364

ELECTRIC CIRCUIT DIAGRAM 23-368

SPECIFICATIONS

Item			Specifications
Manufacturer			Aisin Seiki Co., Ltd.
Transmission model			M036A6
Torque converter	Type		3-element, single-stage, 2-phase (with lockup clutch)
	Stall torque ratio		1.60
Transmission	Type		Planetary gear type; 6 forward gears, 1 reverse gear
	Gear ratios	1st	3.742
		2nd	2.003
		3rd	1.343
		4th	1.000
		5th	0.773
		6th	0.634
		Rev	3.539
Range selection pattern			P-R-N-D-3-2 (engine startup possible in P and N only)
Automatic transmission fluid	Type		Mobil ATF3309 or equivalent
	Total quantity L {qts.}		13 {14}
	Quantity at time of replacement L {qts.}	Replaced with drain plug removed	Approx. 6.4 {6.8}
		Replaced with oil pan removed	Approx. 8.4 {8.9}

1. Overview

- The automatic transmission forms a system in which gearshifts are automatically realized through direction of automatic transmission fluid on various paths by solenoid valves in accordance with sensor information on the vehicle speed, throttle opening, and other aspects of vehicle operation.
- The automatic transmission electronic control unit provides various control functions. These include a diagnosis function (here, the automatic transmission electronic control unit monitors the main components and warns the driver of any abnormality), a failsafe function (here, the automatic transmission electronic control unit stops control of the automatic transmission when necessitated by an abnormality), and a function (here, the automatic transmission electronic control unit changes the control method to enable continued driving in the event of a relevant abnormality).
- The system consists mainly of electronically controlled control valves (solenoid valves), a torque converter, planetary gears, brakes, clutches, and the automatic transmission electronic control unit and sensors that are used for control of the aforementioned components.

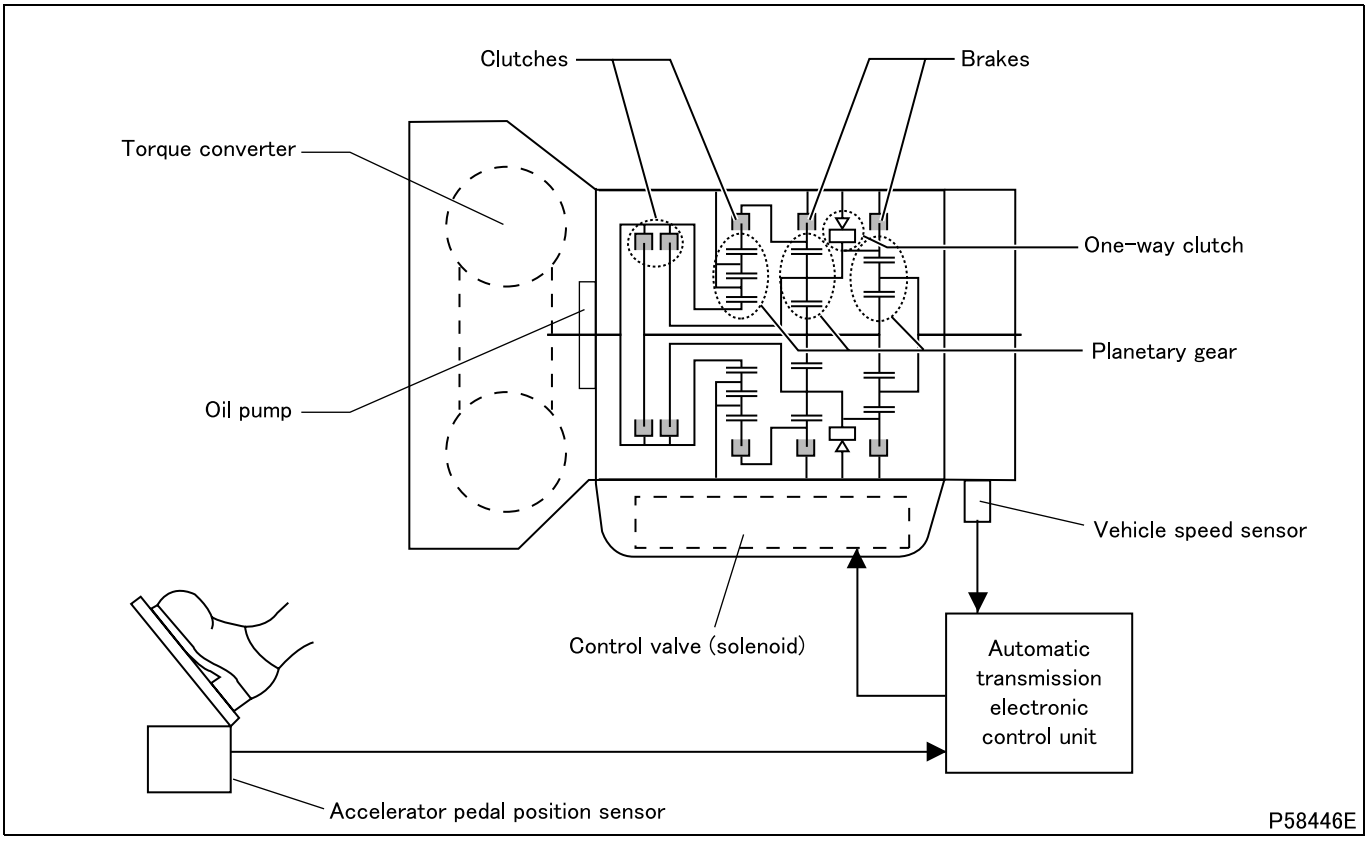

1.1 Automatic transmission

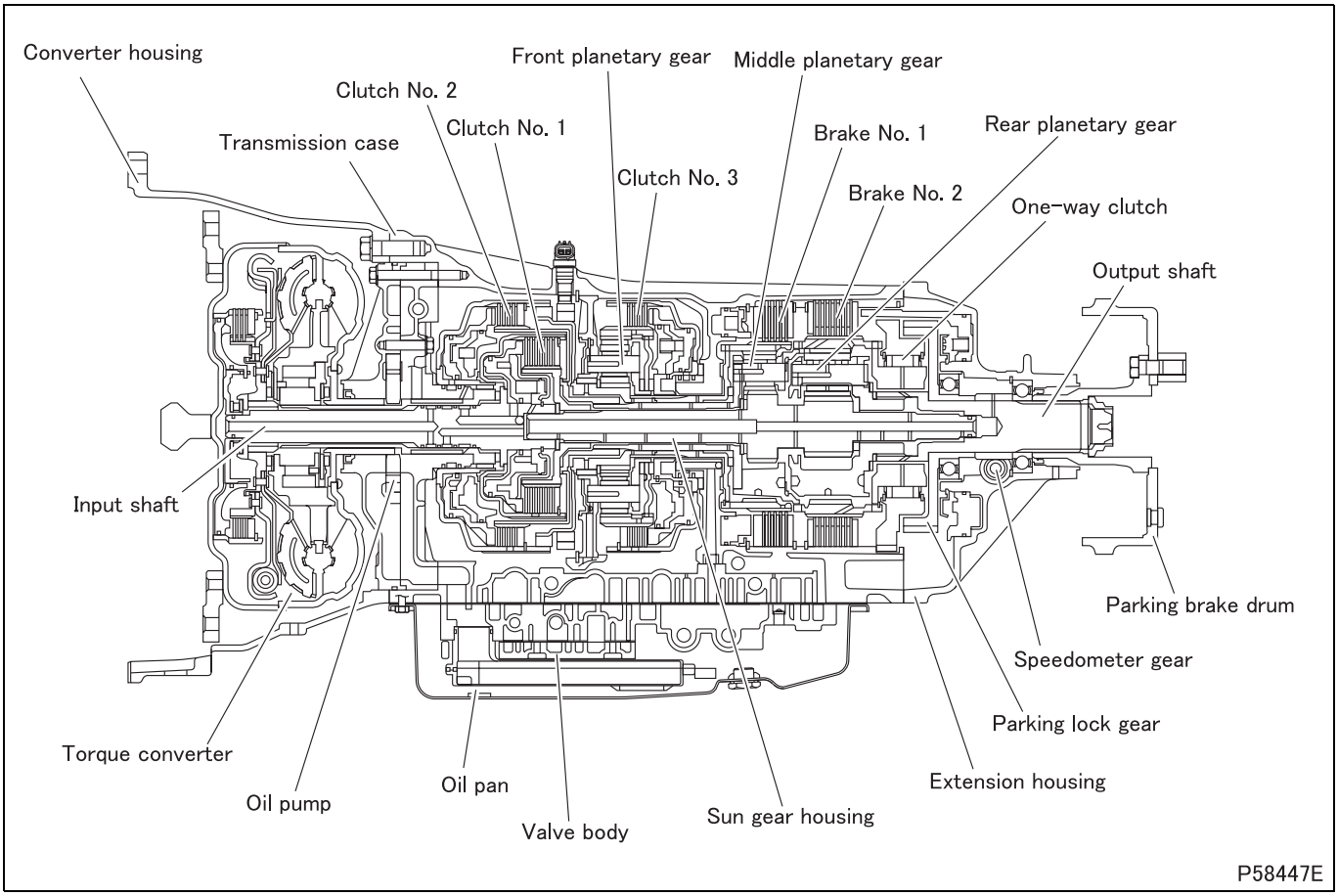

- The automatic transmission combines a torque converter (this has a lockup mechanism) and a fully automatic 6-speed gear system.

(1) Torque converter

- The torque converter serves as the input device for the transmission. It functions as a fluid coupling that increases the torque transmitted from the engine and absorbs shock during standing starts and during gearshifts. At vehicle speeds above a certain level, a lockup mechanism in the torque converter eliminates slippage and thus improves transmission efficiency.

(2) Transmission

- The transmission consists of a gear system with 6 forward gears and 1 reverse gear. It effects gearshifts using 1 one-way clutch, 3 planetary gear sets (each of these consists of a sun gear, pinion gears, and a ring gear), 3 hydraulically activated, wet, multi-plate clutches, and 2 hydraulically activated, wet, multi-plate brakes.

(3) Hydraulic control arrangement

- Extensive electronic control effected by a microcomputer (the automatic transmission electronic control unit) over the hydraulic circuitry enables precise control over gearshifts.

(4) Oil pump

- The gears in the oil pump turn in time with the input shaft rotation to suck in oil from the oil pan. The oil is then compressed and discharged into the hydraulic control components and other parts that need to be lubricated.

(5) Valve body

- The valve body consists of the solenoids that are activated by command signals from the electronic control unit to select necessary hydraulic circuit and a control valve that actually changes the operating modes of the brakes and clutches and regulates hydraulic pressure through the selected hydraulic circuit.

1.2 Automatic transmission block diagram

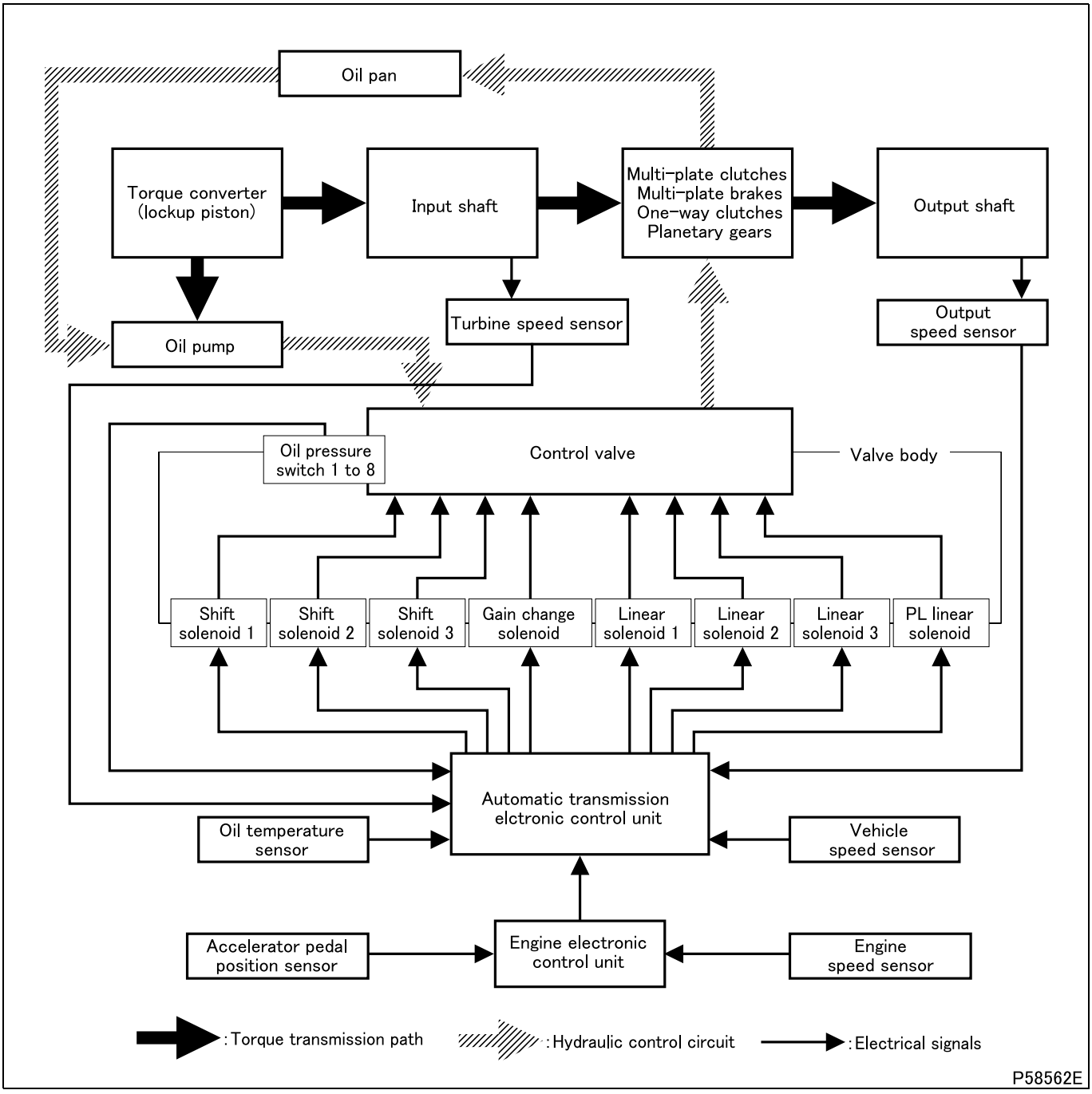

1.3 Transmission

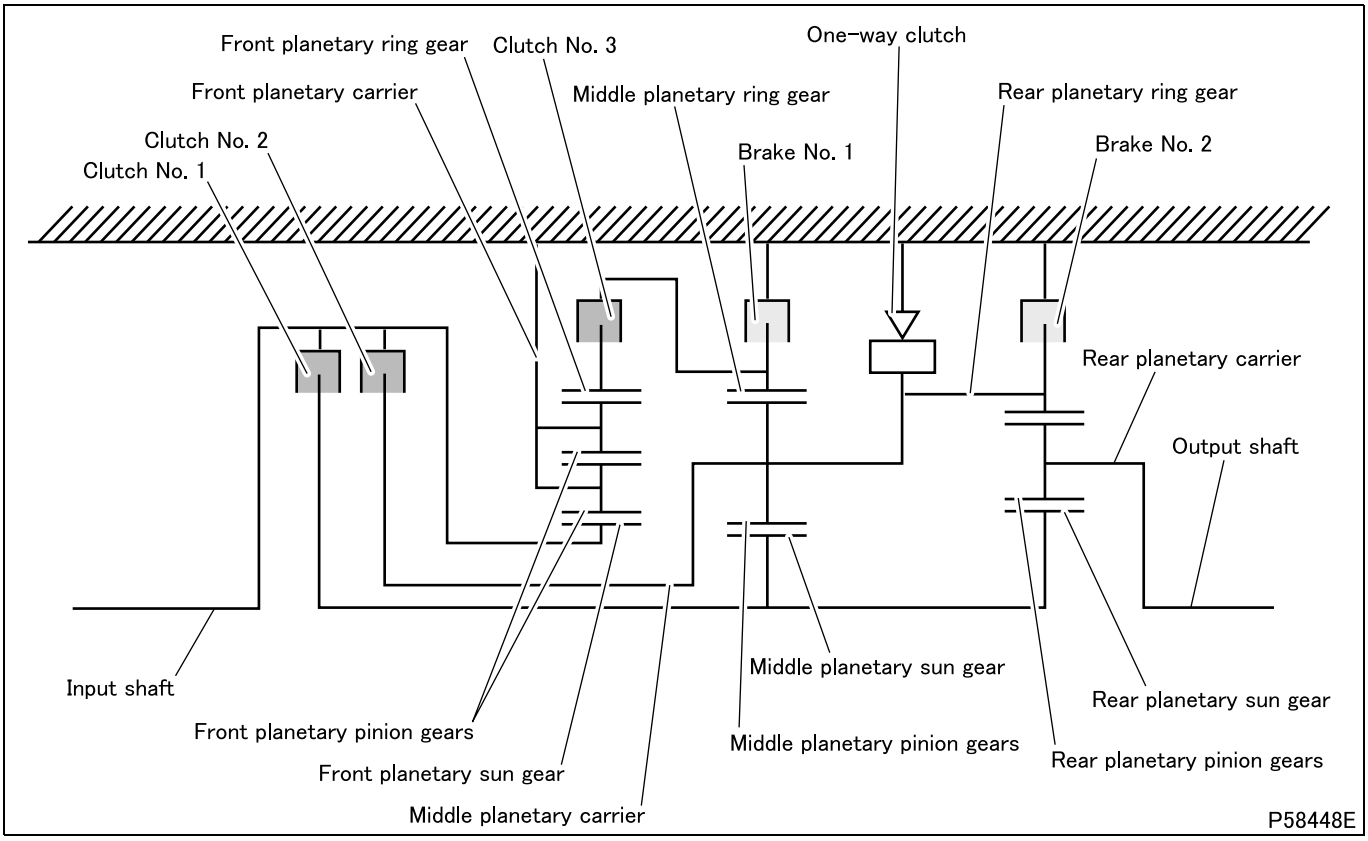

(1) Functions of clutches and brakes

Component	Function
Clutch No. 1	Engage input shaft with middle and rear planetary sun gears
Clutch No. 2	Engage input shaft with middle planetary carrier and rear planetary ring gear
Clutch No. 3	Engage front planetary ring gear with middle planetary ring gear
Brake No. 1	Lock middle planetary ring gear
Brake No. 2	Lock front planetary carrier and rear planetary ring gear
One-way clutch	Lock front planetary carrier and rear planetary ring gear against counterclockwise rotation (only allowing them to rotate clockwise)

(2) Operation timing of clutches, brakes and solenoids

Shifter position		Shift solenoid			Linear solenoid			Clutch No.			Brake No.		One-way clutch
		1	2	3	1	2	3	1	2	3	1	2	
P	Parking		O	O		O						O	
R	Rev (high torque)	O		O		O	O			O		O	
	Rev (low torque)	O	O	O		O	O			O		O	
N	Neutral		O	O		O						O	
D	1st			O		O		O				O	●
	2nd				O			O			O		
	3rd	O				O		O		O			
	4th	O	O		O			O	O				
	5th		O			O			O	O			
	6th		O		O				O		O		

O :In operation

● :Only in operation when driven

1.4 Range selector lever

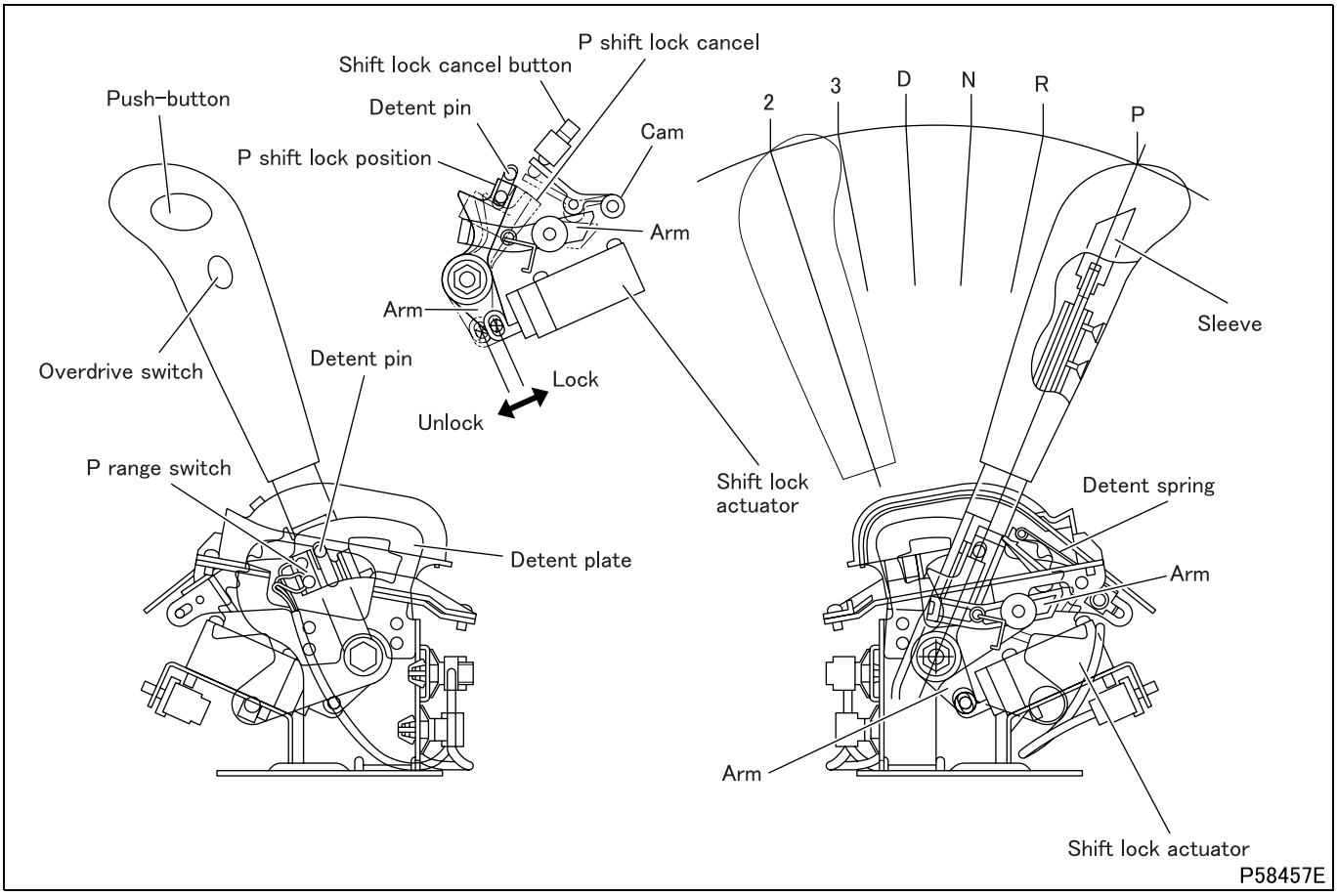

- The P range switch indicates whether the P range is selected. It is used for the key interlock function.
- The shift lock actuator is used in control of the P shift lock function.
- The shift lock cancel button cancels the P shift lock function in a way that bypasses the shift lock actuator. It is used in the event of a fault.

(1) Key interlock function

(1.1) Locked condition

Input signal	Key interlock electronic control unit	Output signal
P Range switch ON (range selector lever in position except P)	Key interlock activation	Key interlock solenoid ON (key cannot be turned to LOCK position)

(1.2) Lock cancellation

Input signal	Key interlock electronic control unit	Output signal
P Range switch OFF (range selector lever in P position)	Key interlock cancellation	Key interlock solenoid OFF (key can be turned to LOCK position)

(2) P shift lock function

- When the required condition is not satisfied, the shift lock actuator operates to prevent the push-button from being pushed, effectively preventing movement of the lever from the P position.

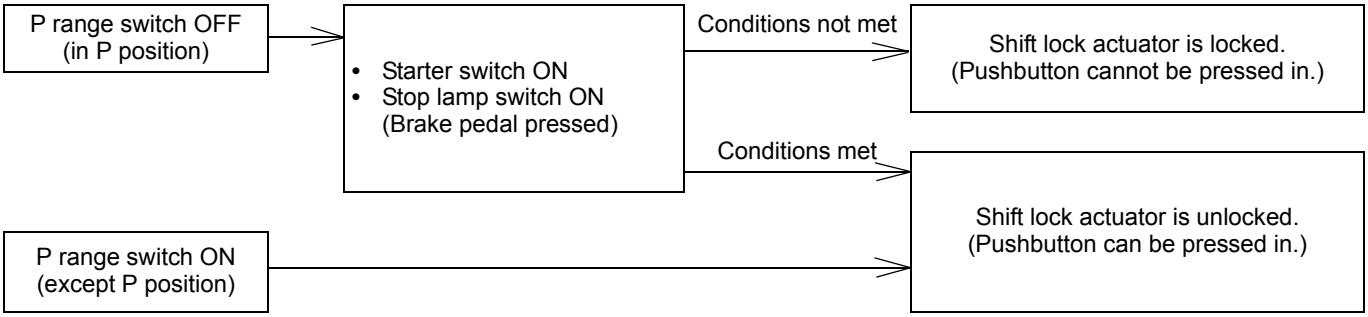

2. Electronic Control System

2.1 System block diagram

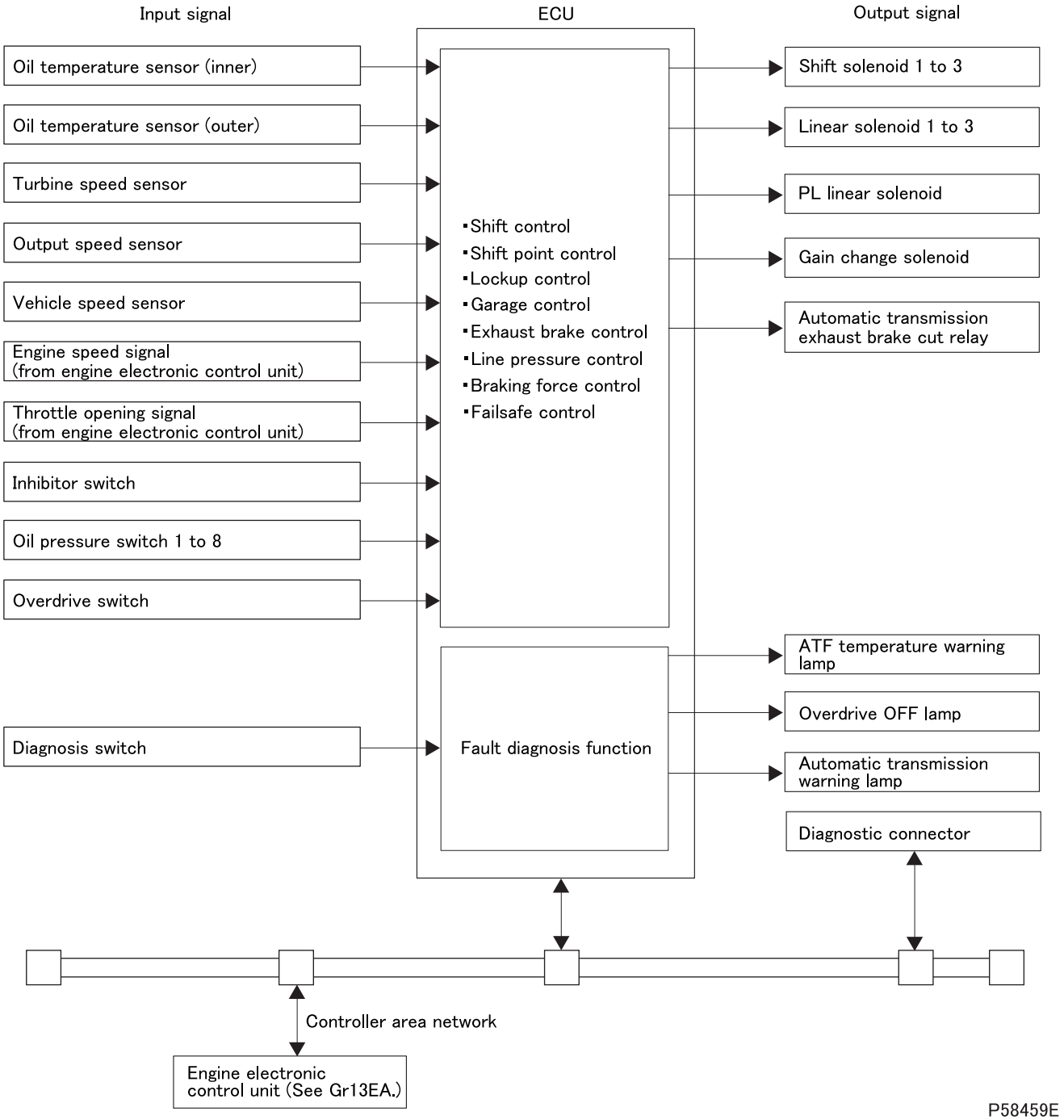

Part name	Major function or operation
Oil temperature sensor (inner and outer)	Detection of automatic transmission fluid temperature
Turbine speed sensor	Detection of input shaft speed
Output speed sensor	Detection of output shaft speed
Vehicle speed sensor	Detection of vehicle speed
Engine electronic control unit (engine speed signal)	Detection of engine speed
Engine electronic control unit (throttle opening signal)	Detection of throttle opening angle
Inhibitor switch	Detection of range selector lever position
Oil pressure switch 1 to 8	Detection of oil pressure
Overdrive switch	Detection of overdrive OFF condition
Diagnosis switch	Displaying diagnosis codes
Shift solenoid 1 to 3	Gear shifting for speed change
Linear solenoid 1, 2	
Linear solenoid 3	Gear shifting for speed change, activation of lockup, shifting from neutral to forward or reverse
PL linear solenoid	Control of line pressure
Gain change solenoid	Change of range where the gearshift pressure is regulated
Automatic transmission exhaust brake cut relay	Cut-off of exhaust brake
ATF temperature warning lamp	Display of abnormal automatic transmission fluid temperature
Overdrive OFF lamp	Display of overdrive OFF
Automatic transmission warning lamp	Display of system fault and diagnosis codes
Diagnostic connector	Communication with scanning tool; displaying and erasing diagnosis codes

2.2 Shift control and shift point control

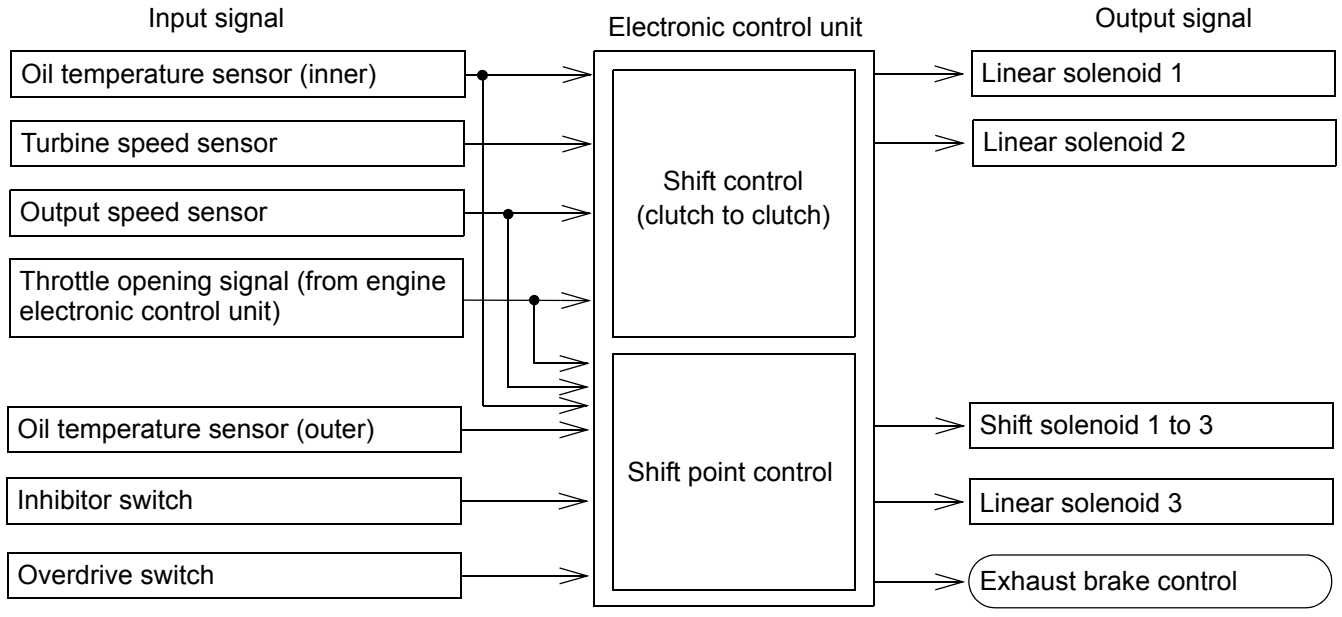

- For automatic selection of the optimal gear, the throttle opening signal and the output speed sensor signals (which correspond to the vehicle speed) cause the automatic transmission electronic control unit to issue relevant signals in accordance with a predetermined shift map to shift solenoid 1-3 and linear solenoid 1 and 2, which are mounted on the valve body.
- Clutch selection for shift control is performed by means of clutch-to-clutch control, whereby one clutch is disengaged as another is engaged.

2.3 Lockup control

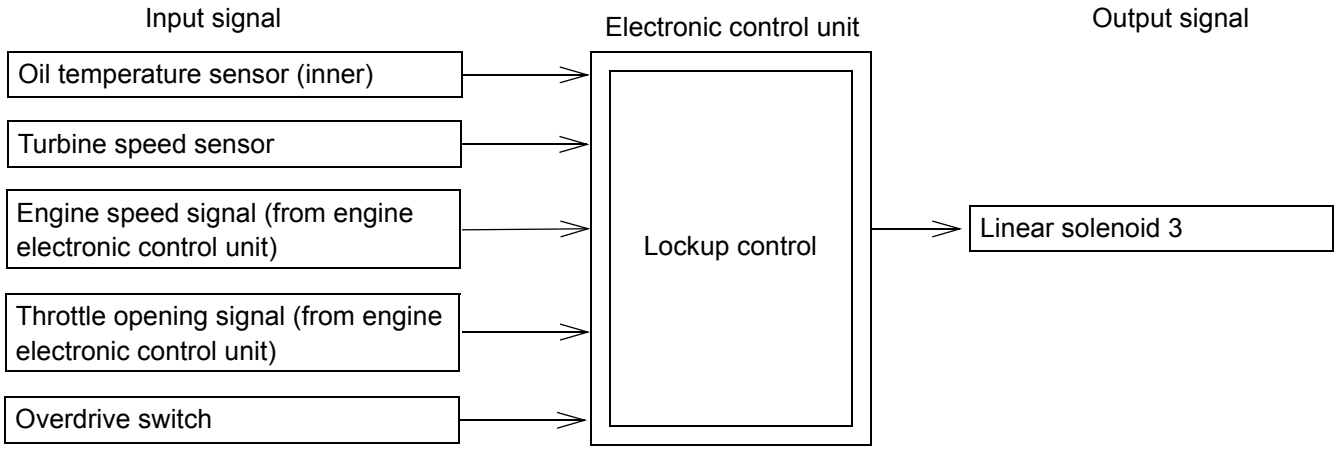

- Lockup control enables slippage in the torque converter to be eliminated for increased transmission efficiency. The throttle opening signal and the output speed sensor signals (which correspond to the vehicle speed) cause the automatic transmission electronic control unit to issue relevant signals in accordance with a predetermined shift map to linear solenoid 3 (this is mounted on the valve body) for lockup ON-OFF-slip selection.

2.4 Garage control

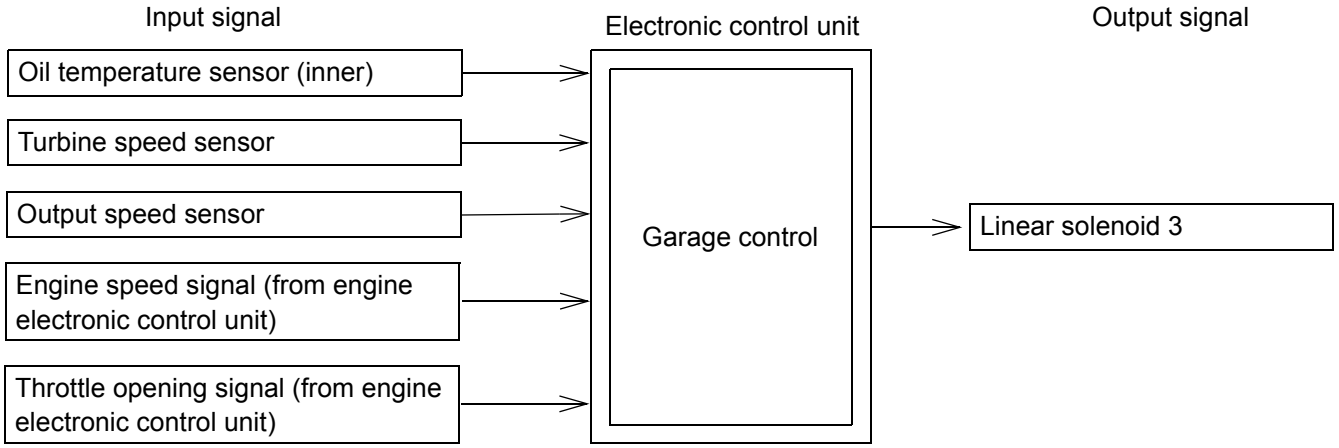

- When the inhibitor switch signal changes from N to a driving range (D or R), a signal is issued by the automatic transmission electronic control unit to linear solenoid 3 (this is mounted on the valve body) to realize a forward or reverse gear.

2.5 Exhaust brake control

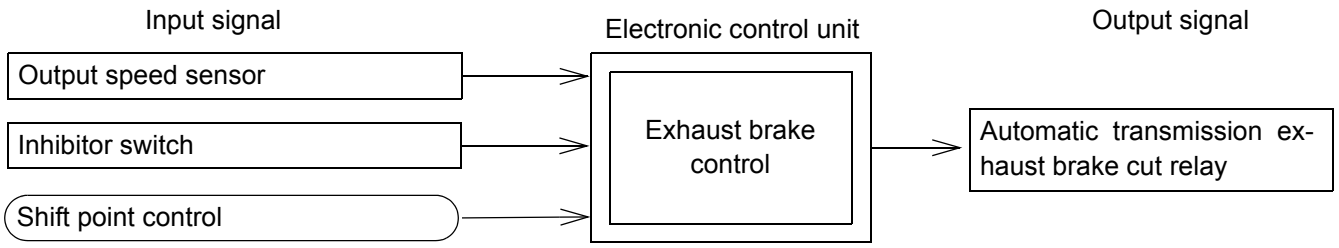

- The exhaust brake is released under any of the following conditions.
  - Range selector lever is in P or N
  - Low speed driving
  - During automatic transmission shifting
  - ATF temperature is high

2.6 Line pressure control

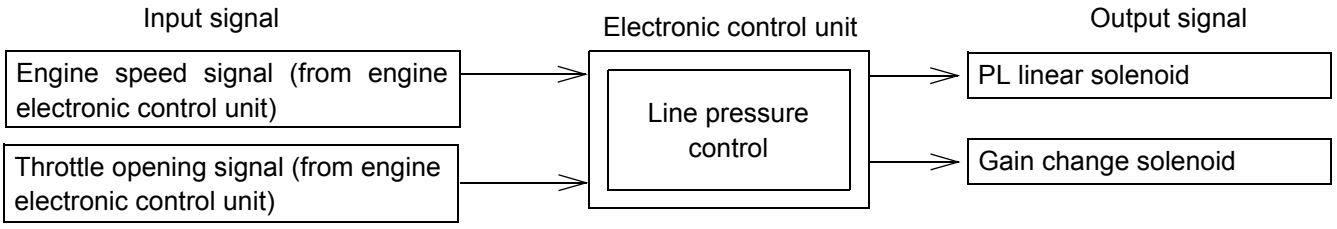

- The line pressure control optimizes the automatic transmission line pressure in accordance with the throttle opening signal and engine speed signal.

2.7 Braking force control

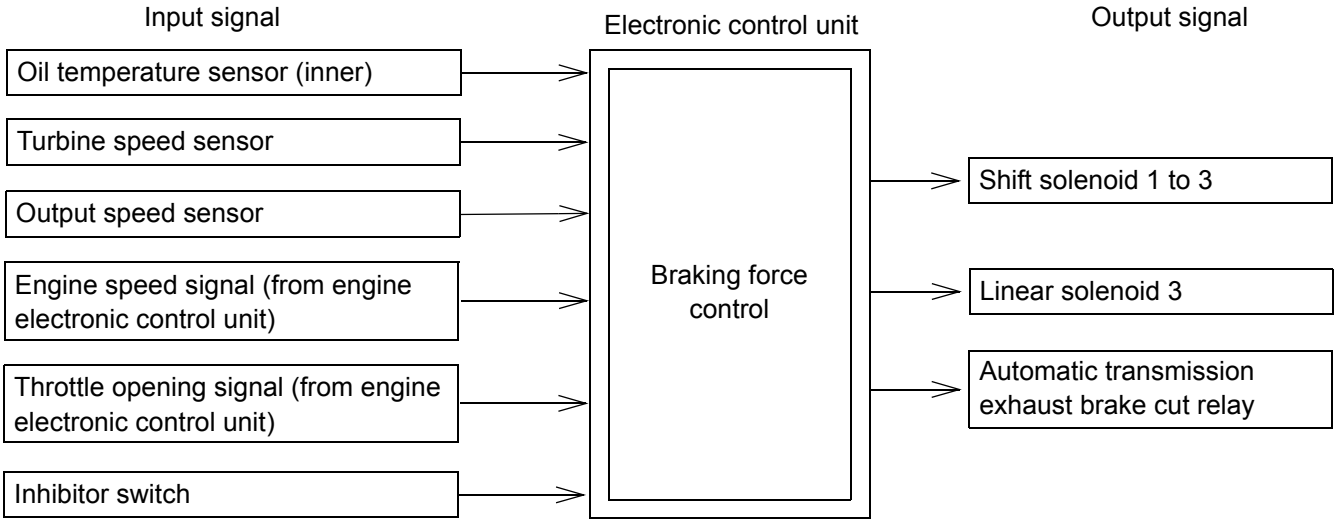

- If the accelerator pedal is released when the vehicle speed is higher than a certain level, a gear is selected in accordance with the road grade and cargo weight to realize optimal engine braking.

2.8 Failsafe control

- Failsafe control is designed to maintain the highest possible level of driveability in the event of an abnormality in either output speed sensor, in the engine speed signal, throttle opening signal, oil temperature sensor, or inhibitor switch, or in any solenoid or mechanical valve.

(1) Inhibitor switch

If, with the vehicle either stationary or moving, an inhibitor switch abnormality occurs such that no signals are applied to the automatic transmission electronic control unit, the automatic transmission electronic control unit selects and holds 3rd gear. If multiple signals are applied to the automatic transmission electronic control unit, the automatic transmission electronic control unit maintains driveability by effecting control in the following order of range precedence: P > N > range signals prior to duplicate signal input. The selected hydraulic circuit in the valve body is determined by the manual valve in accordance with the range selector lever position, so the actual vehicle condition is as shown below.

Actual range selector lever position	Inhibitor switch input signals	Vehicle operating condition
P	P and another select signal	P
R	R and another select signal (except P or N range signal)	R
N	N and another select signal	N
D	D and another select signal (except P or N range signal)	3rd gear
3	3 and another select signal (except P or N range signal)	3rd gear
2	2 and another select signal (except P or N range signal)	3rd gear

2.9 Fault diagnosis function

- While the starter switch is in the ON position, the sensors and other components are continuously monitored for faults. In the event that a component is found faulty, an indication is made in the meter cluster to alert the driver, the fault location is memorized in the form of a diagnosis code, and special control necessitated by the fault is initiated.
- While the special control is taking place, the system's functionality is limited to ensure vehicle and driver safety. It is possible to read the memorized diagnosis code using a general scanning tool or from flashing of the warning lamp.

NOTE

- **Diagnosis codes shown by the general scanning tool and those indicated by flashing of the warning lamp are different.**
- **The general scanning tool is capable of showing more detailed diagnosis codes.**

3. Electronic Control Unit Connection Diagram

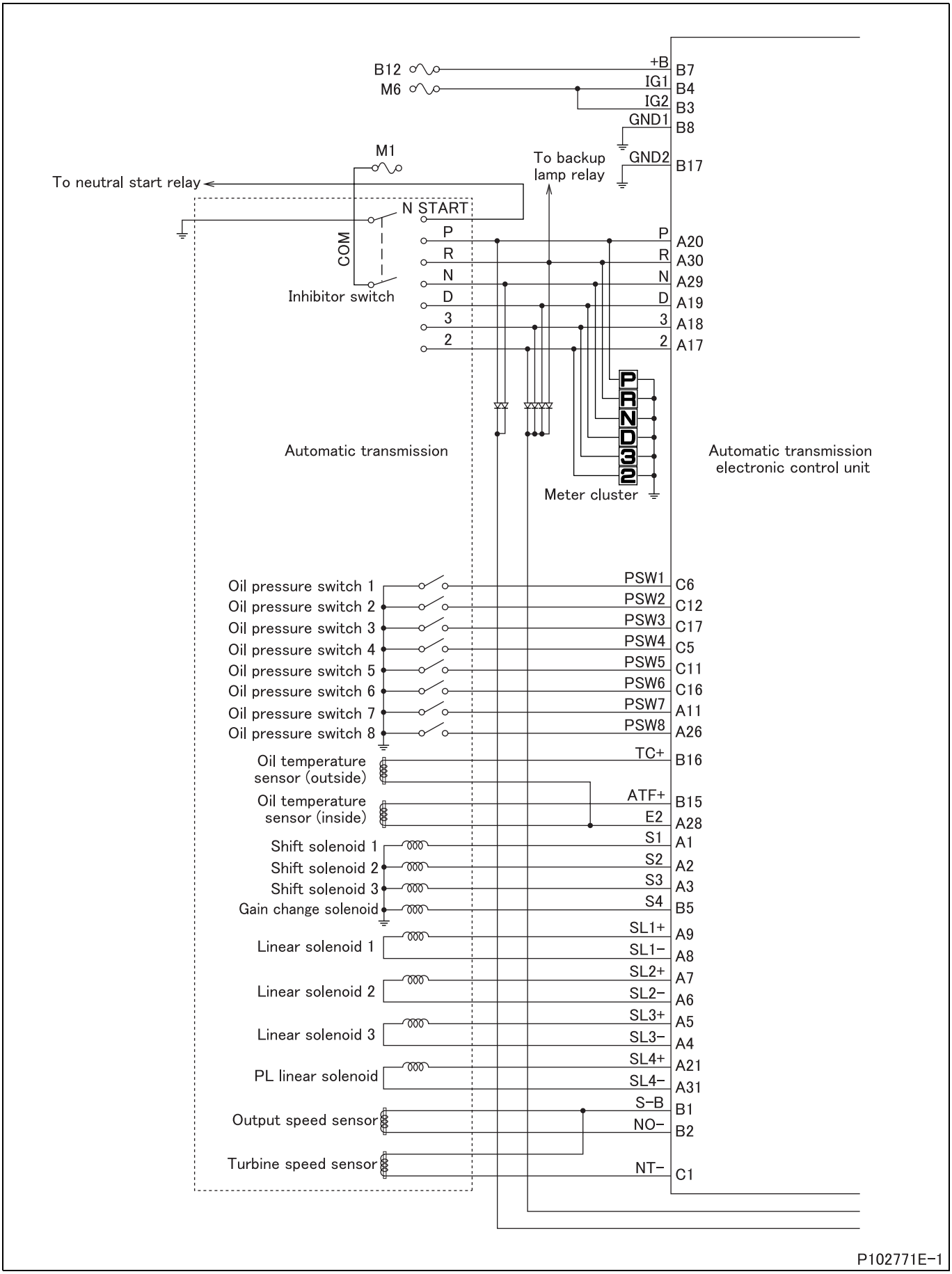

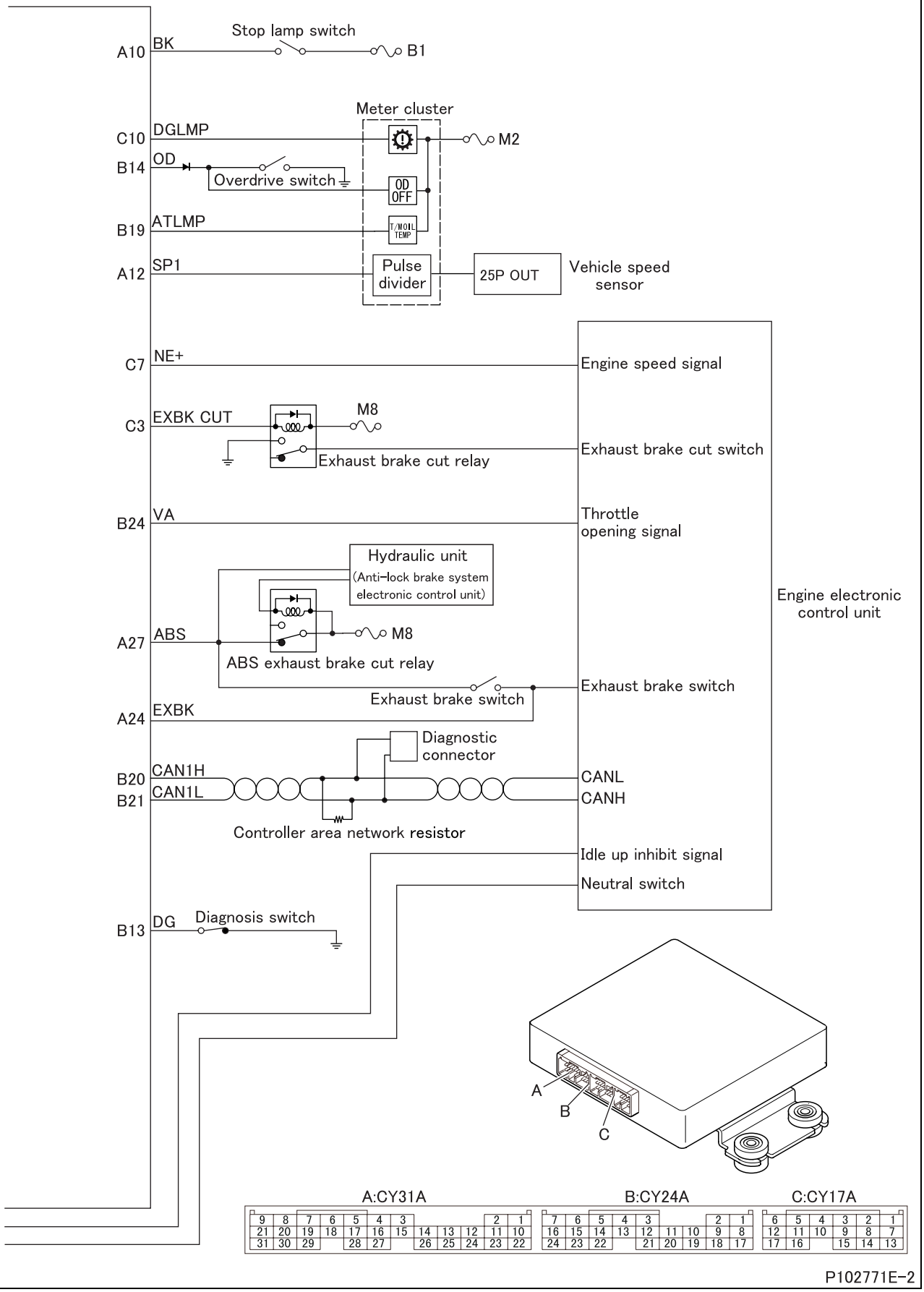
A10
BK
Stop lamp switch
B1
Meter cluster
C10
DGLMP
M2
B14
OD
Overdrive switch
OD OFF
B19
ATLMP
T/MOIL TEMP
A12
SP1
Pulse divider
25P OUT
Vehicle speed sensor
C7
NE+
Engine speed signal
C3
EXBK CUT
M8
Exhaust brake cut relay
Exhaust brake cut switch
B24
VA
Throttle opening signal
Hydraulic unit
(Anti-lock brake system electronic control unit)
A27
ABS
M8
ABS exhaust brake cut relay
Exhaust brake switch
Engine electronic control unit
A24
EXBK
Diagnostic connector
B20
CAN1H
B21
CAN1L
CANL
CANH
Controller area network resistor
Idle up inhibit signal
Neutral switch
B13
DG
Diagnosis switch
A
B
C
A:CY31A
B:CY24A
C:CY17A

P102771E-2

TROUBLESHOOTING

1. Diagnosis Procedure

- Perform the inspection in accordance with the following flowchart.

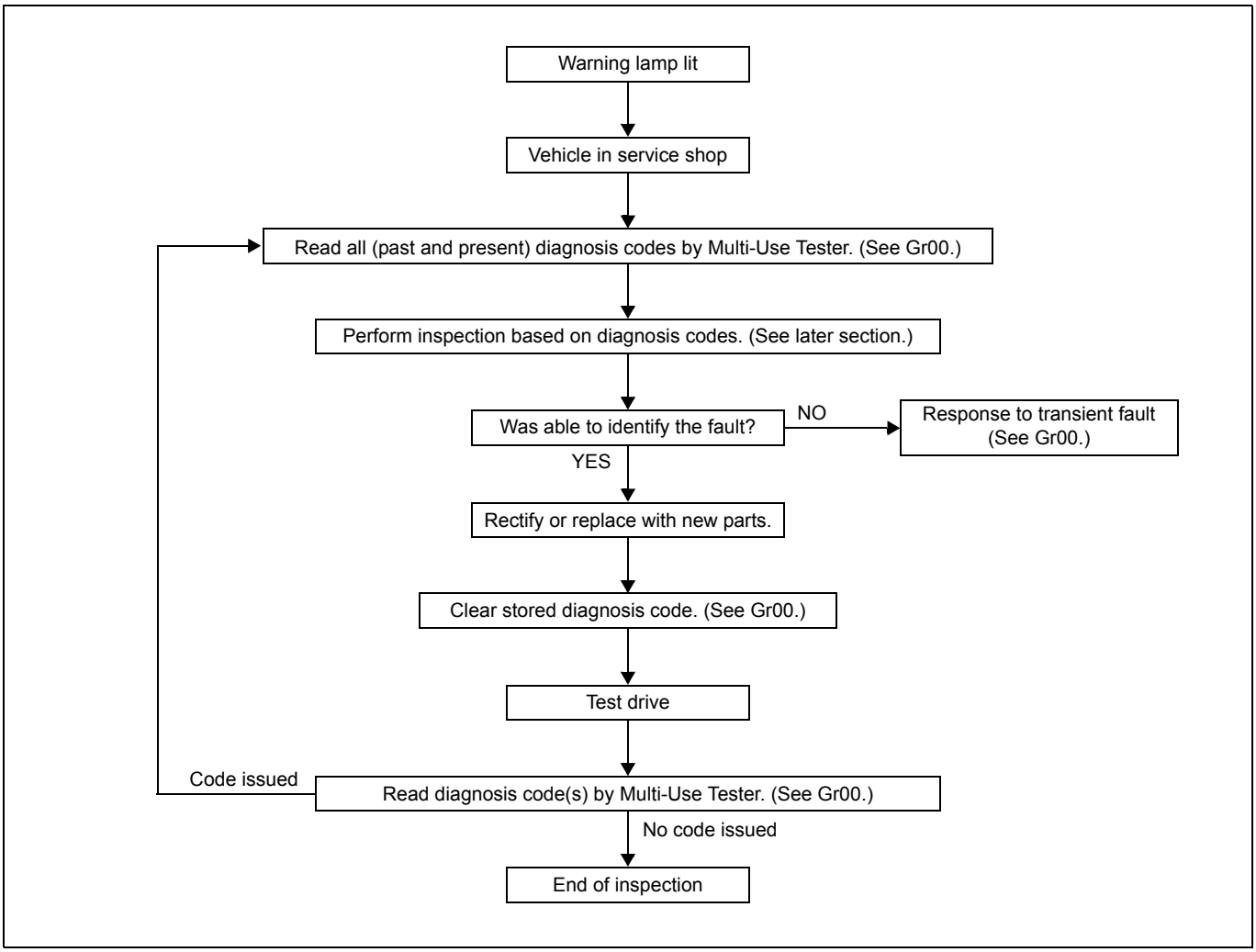

2. Diagnostic Precautions

- Before measuring voltage, check the battery for charged condition and specific gravity. If system inspection is performed with the battery uncharged or reduced in specific gravity, accurate measurements cannot be achieved.
- Before disconnecting battery cables, harnesses and connectors, set the starter switch to LOCK or OFF, then allow at least 20 seconds.
- To avoid having electrical parts damaged, set the starter switch and lighting switch to LOCK or OFF before reconnecting battery cables, harnesses and connectors.
- When performing measurement with the tester, handle the test bar carefully so that it does not damage internal circuit and other electrical parts of the electronic control unit to result in a short-circuit failure between terminals in connector or between connector and car body.
- Resistance is affected by temperature. Determine the necessity of resistance measurement following given temperature specification as a guide. Otherwise, use normal temperature (10 to 35°C {50 to 95°F}) as the measuring condition.

3. Inspections Based on Diagnosis Codes

3.1 Diagnosis code list

- Fault codes can be monitored through the scanning tool (General Scanning Tool or Multi-Use Tester) or the flashing of the warning lamp in the meter cluster.
- There are two kinds of fault codes, i.e., fault code displayed by the General Scanning Tool or Multi-Use Tester and flash code given by the flashing of the warning lamp.
- Scanning tool (General Scanning Tool or Multi-Use Tester) can display diagnosis codes that are more specific than flash codes.
- Diagnosis codes asterisked in the list differ in fault diagnosis period according to the fault diagnosis condition. (For details on fault diagnosis condition, see “Inspection against Each Diagnosis Code”.)

Fault code		Monitor ID	Fault (outline)	Warning	Multi-Use Tester indication	Fault diagnosis period
Diagnosis code	Flash code					
P0078	54	–	Failure of exhaust brake cut relay	O	EXH brake Cut Signal	8TRIP
P0500	12	1	Failure of vehicle speed sensor	●	Vehicle Speed Sensor	2DC
*P0501	12	2	Failure of vehicle speed sensor	●	Vehicle Speed Sensor Performance	IMD or 2DC
P0562	11	72	Open-circuit of starter switch ON power supply	●	Power Supply Voltage (Low)	IMD
P0604	91	74	Failure of electronic control unit	●	ECU Hardware (RAM)	2DC
P0605	92	75	Failure of electronic control unit	●	ECU System (Hardware)	2DC
P062F	93	76	Failure of electronic control unit	●	ECU System (EEPROM)	IMD
P0702	11	73	Open-circuit of battery power supply	●	Power Supply Low (Battery)	2DC
P0706	49	49, 50	Failure of oil pressure switch 8	●	Oil Pressure SW 8 Performance	IMD
P0707	43	19	Failure of inhibitor switch	●	Shift Position SW Low	IMD
P0708	43	20	Failure of inhibitor switch	●	Shift Position SW High	IMD
P0711	13	13, 14	Failure of oil temperature sensor (inside)	●	Oil Temp Sensor “OP” Performance	IMD
P0712	13	11	Failure of oil temperature sensor (inside)	●	Oil Temp Sensor “OP” Low	IMD
P0713	13	12	Failure of oil temperature sensor (inside)	●	Oil Temp Sensor “OP” High	IMD
P0714	13	15	Failure of oil temperature sensor (inside)	●	Oil Temp Sensor “OP” Intermittent	IMD
P0717	16	5	Failure of turbine speed sensor	●	Turbine Speed Sensor No Signal	2DC
*P0721	25	4	Failure of output speed sensor	●	Output Speed Sensor Performance	IMD or 2DC
P0722	25	3	Failure of output speed sensor	●	Output Speed Sensor No Signal	2DC
P0726	15	6	Abnormality of engine speed signal	●	Engine Speed Sensor Performance	2DC
P0730	37	7, 8	Incorrect gear ratio	●	Incorrect Gear Ratio	IMD
P0746	41	38, 39	Linear solenoid 1 binds in OFF state.	●	Linear Sol Valve 1 Stuck Off	IMD
P0747	41	40	Linear solenoid 1 binds in ON state.	●	Linear Sol Valve 1 Stuck On	IMD
P0748	26	21, 22	Linear solenoid 1 is open-circuited or short-circuited.	●	Linear Sol Valve 1 Electrical	IMD
P0751	45	52	Shift solenoid 1 binds in OFF state.	●	Shift Solenoid 1 Stuck Off	IMD
P0752	45	51	Shift solenoid 1 binds in ON state.	●	Shift Solenoid 1 Stuck On	IMD
P0756	46	56	Shift solenoid 2 binds in OFF state.	●	Shift Solenoid 2 Stuck Off	IMD

Fault code		Monitor ID	Fault (outline)	Warning	Multi-Use Tester indication	Fault diagnosis period
Diagnosis code	Flash code					
P0757	46	55	Shift solenoid 2 binds in ON state.	●	Shift Solenoid 2 Stuck On	IMD
P0761	47	60	Shift solenoid 3 binds in OFF state.	●	Shift Solenoid 3 Stuck Off	IMD
P0762	47	59	Shift solenoid 3 binds in ON state.	●	Shift Solenoid 3 Stuck On	IMD
P0766	55	64	Shift solenoid 3 binds in OFF state.	●	Shift Solenoid 4 Stuck Off	IMD
P0767	55	63	Shift solenoid 3 binds in ON state.	●	Shift Solenoid 4 Stuck On	IMD
P0776	42	43, 44	Linear solenoid 2 binds in OFF state.	●	Linear Sol Valve 2 Stuck Off	IMD
P0777	42	45	Linear solenoid 2 binds in ON state.	●	Linear Sol Valve 2 Stuck On	IMD
P0778	27	23, 24	Linear solenoid 2 is open-circuited or short-circuited.	●	Linear Sol Valve 2 Electrical	IMD
P0796	48	47	Linear solenoid 3 binds in OFF state.	●	Linear Sol Valve 3 Stuck Off	IMD
P0797	48	46	Linear solenoid 3 binds in ON state.	●	Linear Sol Valve 3 Stuck On	IMD
P083D	48	48	Failure of oil pressure switch 7	●	Oil Pressure SW 7 High	IMD
P0842	41	37	Failure of oil pressure switch 1	●	Oil Pressure SW 1 Low	IMD
P0843	41	36	Failure of oil pressure switch 1	●	Oil Pressure SW 1 High	IMD
P0847	42	42	Failure of oil pressure switch 2	●	Oil Pressure SW 2 Low	IMD
P0848	42	41	Failure of oil pressure switch 2	●	Oil Pressure SW 2 High	IMD
P0863	88	67	Abnormality in CAN communication	●	CAN Communication	IMD
P0872	45	54	Failure of oil pressure switch 3	●	Oil Pressure SW 3 Low	IMD
P0873	45	53	Failure of oil pressure switch 3	●	Oil Pressure SW 3 High	IMD
P0877	46	58	Failure of oil pressure switch 4	●	Oil Pressure SW 4 Low	IMD
P0878	46	57	Failure of oil pressure switch 4	●	Oil Pressure SW 4 High	IMD
P0973	31	29	Failure of shift solenoid 1	●	Shift Solenoid 1 - Low	IMD
P0974	31	30	Failure of shift solenoid 1	●	Shift Solenoid 1 - High	IMD
P0976	32	31	Failure of shift solenoid 2	●	Shift Solenoid 2 - Low	IMD
P0977	32	32	Failure of shift solenoid 2	●	Shift Solenoid 2 - High	IMD
P0979	33	33	Failure of shift solenoid 3	●	Shift Solenoid 3 - Low	IMD
P0980	33	34	Failure of shift solenoid 3	●	Shift Solenoid 3 - High	IMD
P0985	52	–	Failure of gain change solenoid	O	Shift Solenoid 4 - Low	IMD
P0986	52	35	Failure of gain change solenoid	●	Shift Solenoid 4 - High	IMD
P0989	47	62	Failure of oil pressure switch 5	●	Oil Pressure SW 5 Low	IMD
P0990	47	61	Failure of oil pressure switch 5	●	Oil Pressure SW 5 High	IMD
P0994	55	66	Failure of oil pressure switch 6	●	Oil Pressure SW 6 Low	IMD
P0995	55	65	Failure of oil pressure switch 6	●	Oil Pressure SW 6 High	IMD
P1604	24	10	Abnormality in accelerator pedal position signal	●	Accel Sensor	IMD
P2716	34	27, 28	PL linear solenoid is open-circuited or short-circuited.	●	Linear Sol Valve 4 Electrical	IMD
P2742	17	16	Failure of oil temperature sensor (outside)	●	Oil Temp Sensor “TC” Low	IMD
*P2743	17	17, 18	Failure of oil temperature sensor (outside)	●	Oil Temp Sensor “TC” High	IMD or 2DC
P2757	61	9	Failure of lockup clutch	●	Lockup Clutch	2DC
P2759	35	25, 26	Linear solenoid 3 is open-circuited or short-circuited.	●	Linear Sol Valve 3 Electrical	IMD
U0100	88	68, 69, 70, 71	Abnormality in CAN communication	●	CAN Communication	IMD

IMD: Immediate CAN: Controller area network
DC [Drive cycle]: “Start switch ON to start engine till starter switch OFF” constitutes 1 DC.
TRIP: Starter switch ON to OFF constitutes 1 TRIP.
●: Engine warning and automatic transmission warning lamps lit
O : Automatic transmission warning lamp only lit

3.2 Inspection against Each Fault Code in the List

[Fault code]
Diagnosis code: P0078/Flash code: 54
[Monitor ID]
None
[Fault (outline)]
Failure of exhaust brake cut relay
[Diagnosis check]
- The operating condition of exhaust brake under exhaust brake cut control is monitored.

[Code generation condition]
- Input of controller area network signal of exhaust brake operation from engine electronic control unit continues for more than 0.5 second.

[Diagnosis check timing]
- Fault diagnosis is performed each time when the control is activated.

[Diagnostic requirement]
- Exhaust brake cut being requested

[Control effected by electronic control unit during fault]
- Braking force control is inhibited.

[Probable cause of trouble]
- Open-circuit or short-circuit of harness between electronic control unit and automatic transmission exhaust brake cut relay
- Malfunction of each connector
- Malfunction of automatic transmission exhaust brake cut relay
- Defective electronic control unit

[Recoverability]
- When diagnosis code is cleared with scanning tool (General Scanning Tool or Multi-Use Tester).

[Electronic Control Unit Connection Diagram]

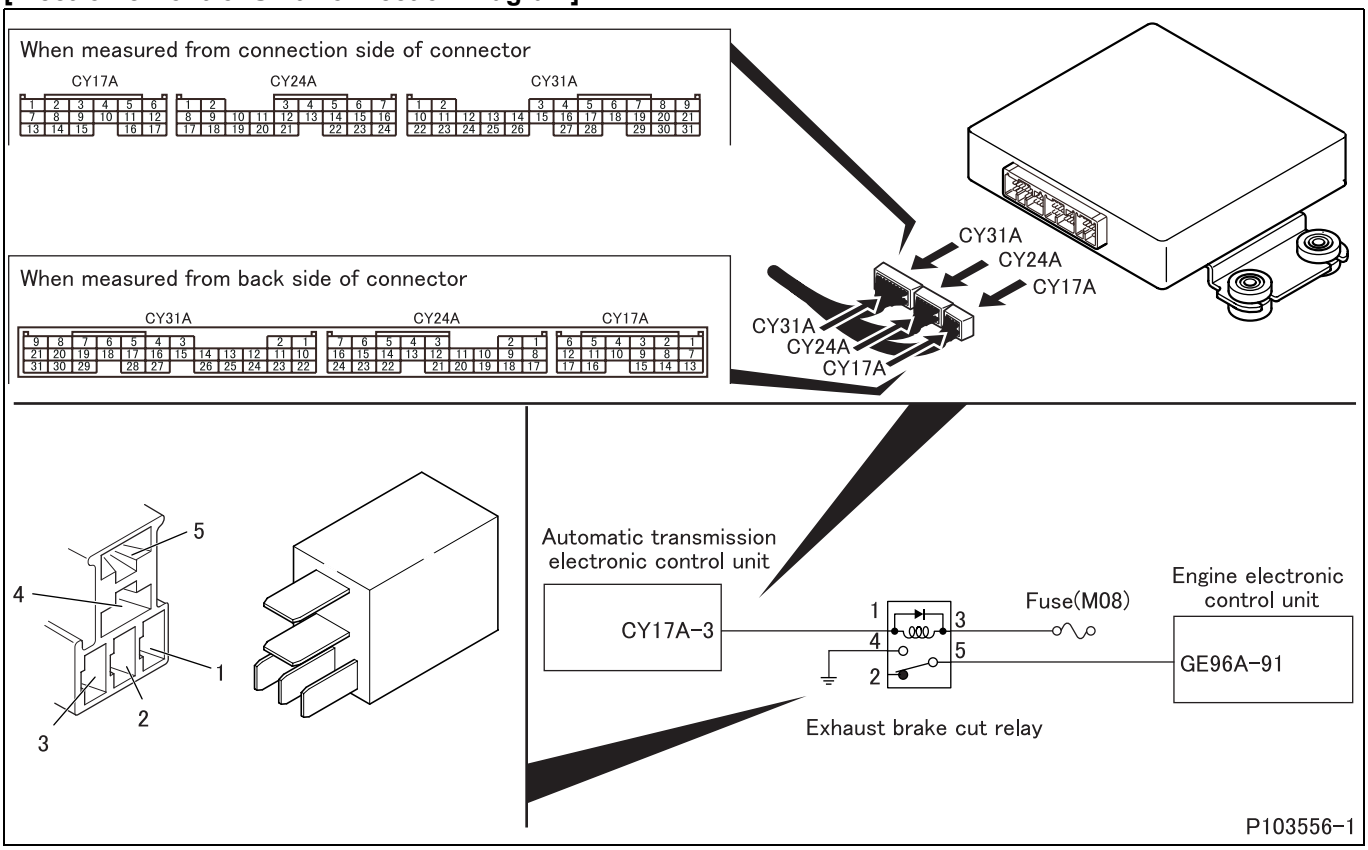

[Parts Identification and Location]

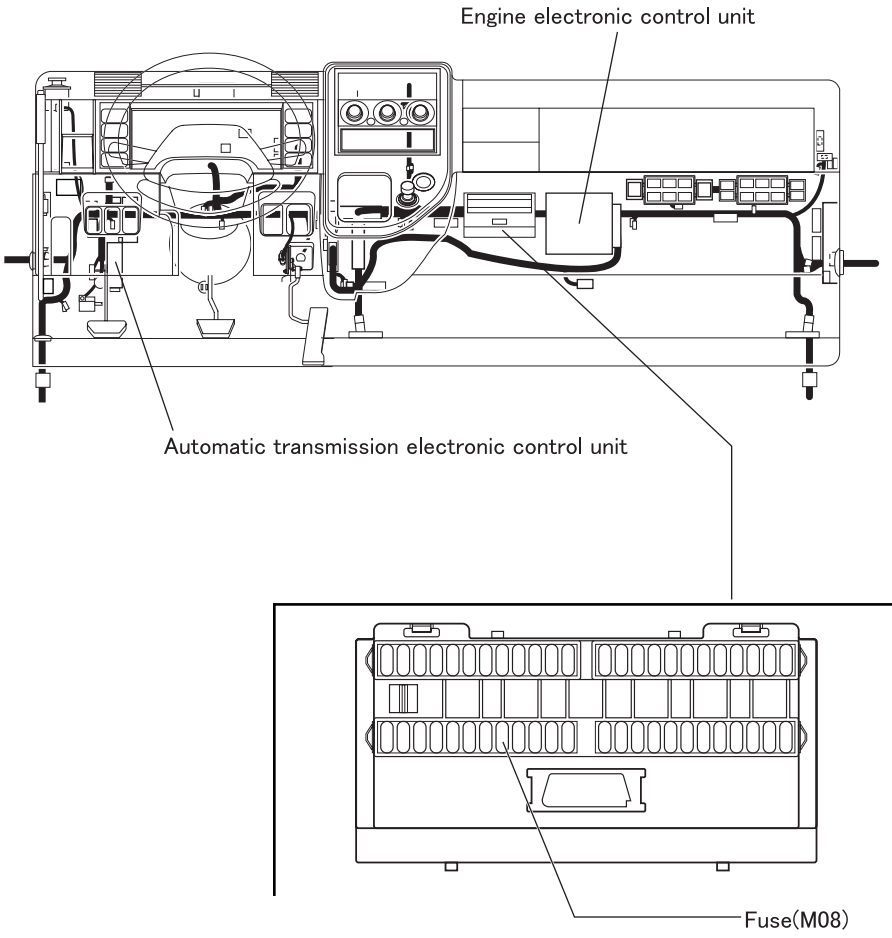

[Fault diagnosis]

- Perform checks in the sequence of the following steps.

Step 1	Inspection items		Inspection by control data
	Maintenance item		**<Multi-Use Tester not used>** Measure value of voltage between connector (CY17A) terminal No. 3 (+) and connector (CY24A) terminal No. 8 (–). **<Multi-Use Tester used>** Measure item No. 54 “Exh Brake Cut SIG” of Service Data.
	Inspection condition		When vehicle is running **<Multi-Use Tester not used>** Measure from back side of harness connector with electronic control unit connected to harness.
	Requirements		**<Multi-Use Tester not used>** • Decelerated and stopped: 12 V → 0 V • During acceleration: 12 V **<Multi-Use Tester used>** • Decelerated and stopped: OFF → ON • During acceleration: OFF
	Inspection result (Is the judging standard satisfied?)	YES	Go to transient fault (See Gr00.).
		NO	Go to step 2.

Step 2	Inspection items		Inspection of electronic control unit connector
	Maintenance item		Inspection of connector
	Inspection condition		–
	Requirements		• Connector is properly connected. • No trace of water entry is found. • No corrosion is found in terminal. • Connection to terminal is appropriate.
	Inspection result (Is the judging standard satisfied?)	YES	Go to step 3.
		NO	Modify connector.

Step 3	Inspection items		Inspection of relay connector
	Maintenance item		Inspection of connector
	Inspection condition		–
	Requirements		• Connector is properly connected. • No trace of water entry is found. • No corrosion is found in terminal. • Connection to terminal is appropriate.
	Inspection result (Is the judging standard satisfied?)	YES	Go to step 4.
		NO	Modify connector.

Step 4	Inspection items		Inspection of relay unit
	Maintenance item		Measure continuity between terminals No. 4 and 5 when relay operates.
	Inspection condition		Apply battery voltage across connector terminals No. 3 (+) and 1 (–).
	Requirements		There is continuity.
	Inspection result (Is the judging standard satisfied?)	YES	Go to step 5.
		NO	Replacement of sensor

<Step 4 inspection diagram>

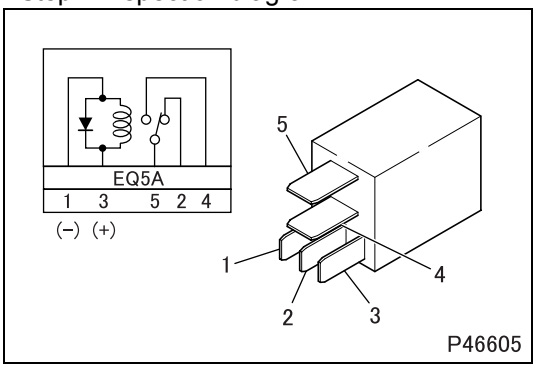

Step 5	Inspection items		Inspection of harness between relay and electronic control unit (signal)
	Maintenance item		Check circuit between relay connector terminal No. 1 and electronic control unit connector (CY17A) terminal No. 3
	Inspection condition		Disconnect each device from harness and measure from connection side of harness connector.
	Requirements		There is continuity.
	Inspection result (Is the judging standard satisfied?)	YES	Go to step 6.
		NO	Modify harness.

Step 6	Inspection items		Inspection of harness between relay and fuse
	Maintenance item		Check circuit between relay connector terminal No. 3 and electronic control unit fuse (M08)
	Inspection condition		Disconnect each device from harness and measure from connection side of harness connector.
	Requirements		There is continuity.
	Inspection result (Is the judging standard satisfied?)	YES	Go to step 7.
		NO	Modify harness.

Step 7	Inspection items		Inspection by control data
	Maintenance item		**<Multi-Use Tester not used>** Measure value of voltage between connector (CY17A) terminal No. 3 (+) and connector (CY24A) terminal No. 8 (–). **<Multi-Use Tester used>** Measure item No. 54 (Exh Brake Cut SIG) of Service Data.
	Inspection condition		When vehicle is running **<Multi-Use Tester not used>** Measure from back side of harness connector with electronic control unit connected to harness.
	Requirements		**<Multi-Use Tester not used>** • Decelerated and stopped: 12 V → 0 V • During acceleration: 12 V **<Multi-Use Tester used>** • Decelerated and stopped: OFF → ON • During acceleration: OFF
	Inspection result (Is the judging standard satisfied?)	YES	Go to transient fault (See Gr00.).
		NO	Replacement of electronic control unit

[Fault code]
Diagnosis code: P0500/Flash code: 12
[Monitor ID]
1
[Fault (outline)]
Failure of vehicle speed sensor
[Diagnosis check]
- Vehicle speed sensor is monitored for fault during vehicle run (after at least 4 seconds of running at 5 km/h {3 mph} or more)

[Code generation condition]
- Input signal from vehicle speed sensor is missing when output speed sensor output is normal.

[Diagnosis check timing]
- Fault diagnosis is performed once at the minimum during the driving cycle.

[Diagnostic requirement]
- Vehicle speed: above 5 km/h {3 mph} (not less than 4 sec.)
- Shift position: except P or N range
- Output speed sensor related diagnosis code (P0721, P0722) does not occur.

[Control effected by electronic control unit during fault]
- Normal control is effected using output speed sensor.

[Probable cause of trouble]
- Open-circuit or short-circuit of harness between electronic control unit and pulse divider in meter cluster
- Open-circuit or short-circuit of harness between pulse divider in meter cluster and vehicle speed sensor
- Malfunction of each connector
- Malfunction of pulse divider in meter cluster
- Malfunction of vehicle speed sensor
- Malfunction of electronic control unit

[Recoverability]
- Recovered if signal becomes normal with starter switch in ON position.

[Electronic Control Unit Connection Diagram]

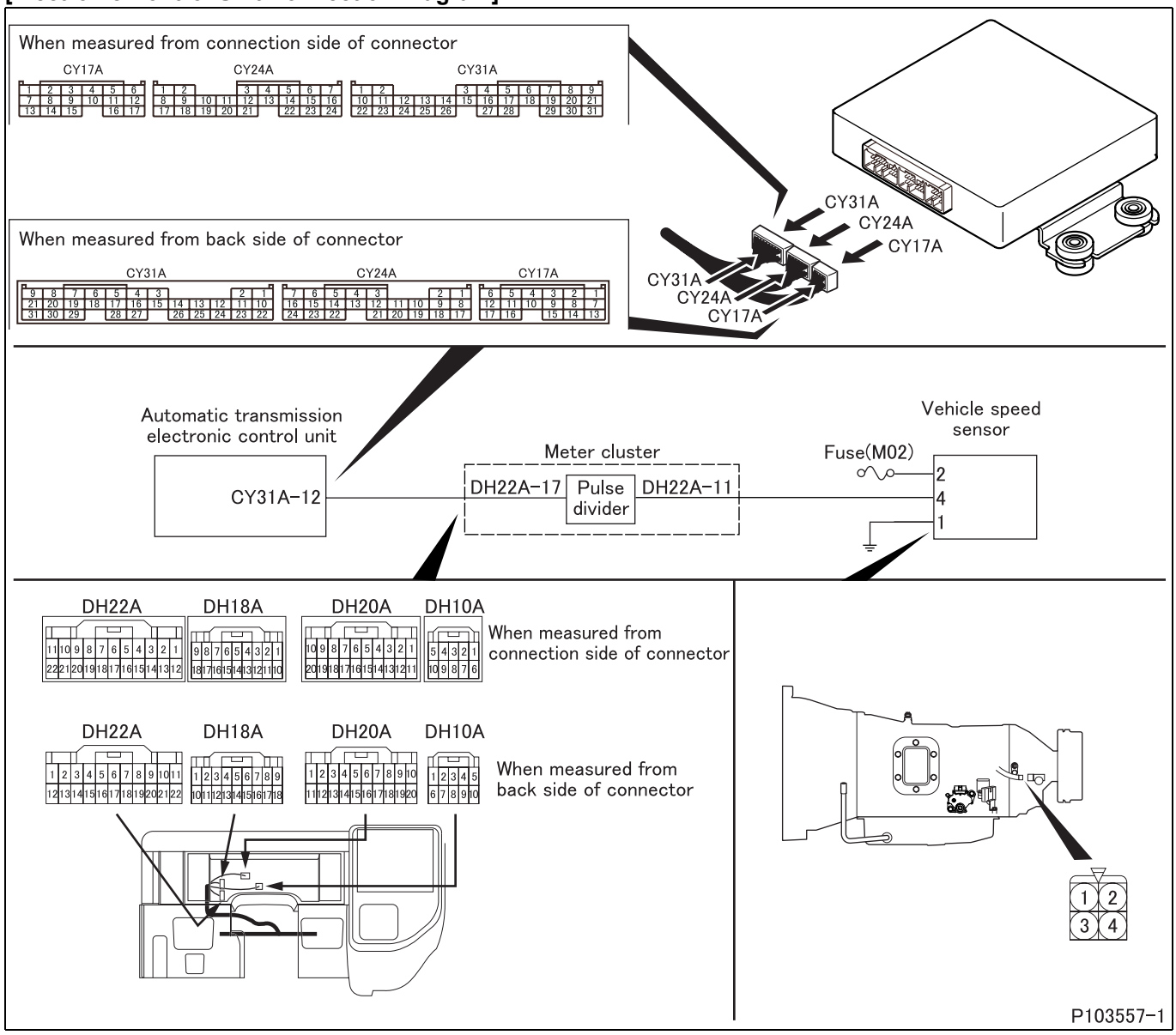

[Parts Identification and Location]

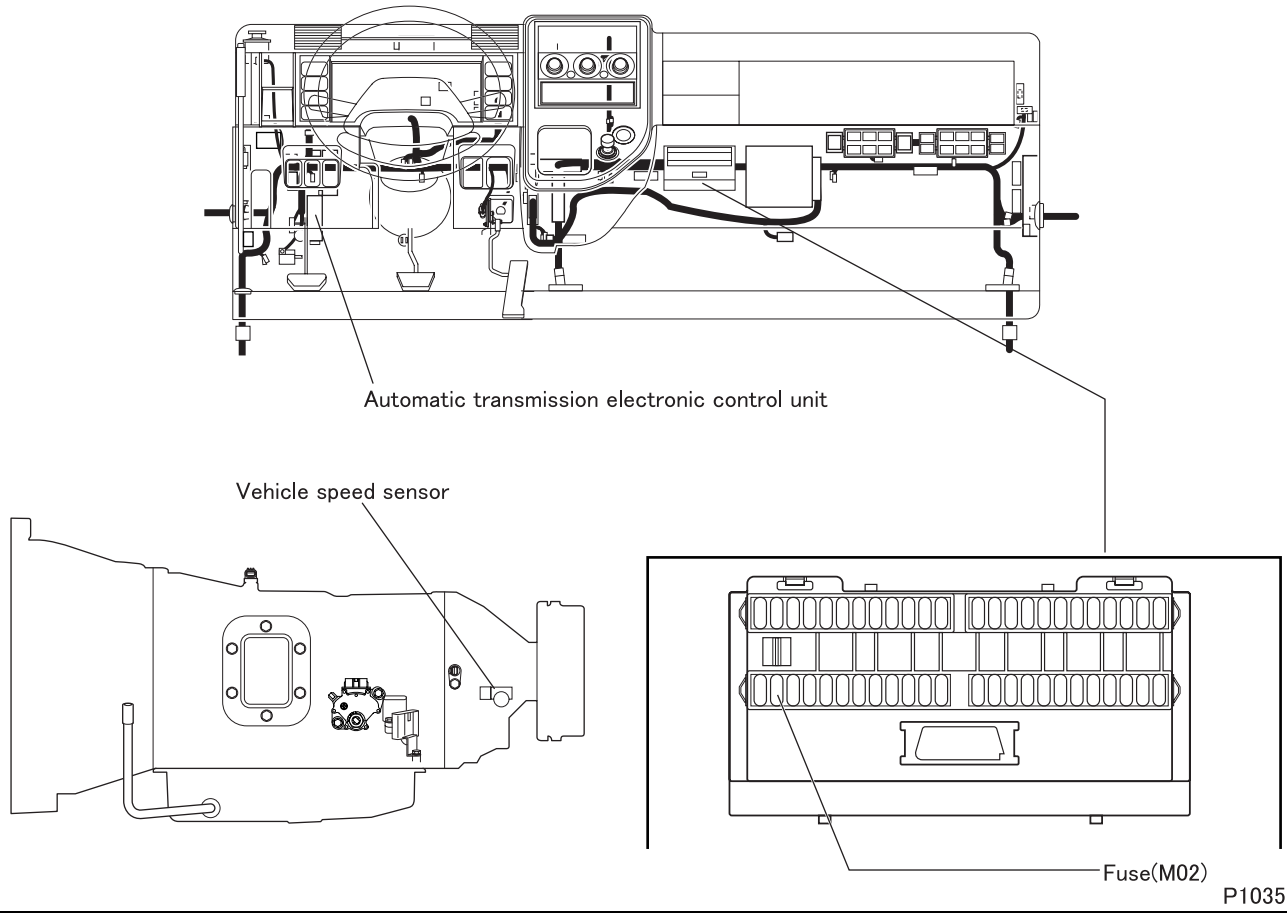

[Fault diagnosis]

- Perform checks in the sequence of the following steps.

Step 1	Inspection items		Inspection by control data
	Maintenance item		**<Multi-Use Tester not used>** Go to step 2. **<Multi-Use Tester used>** Measure item No. 12 “VEH Speed 1” of Service Data.
	Inspection condition		During vehicle run
	Requirements		Same indication as speedometer is given.
	Inspection result (Is the judging standard satisfied?)	YES	Go to transient fault (See Gr00.).
		NO	Go to step 2.

Step 2	Inspection items		Inspection by electronic control unit connector (signal)
	Maintenance item		Measure value of voltage between connector (CY31A) terminal No. 12 (+) and (CY24A) terminal No. 8 (–).
	Inspection condition		• Measure from back side of harness connector with electronic control unit connected to harness. • Slowly turn the wheel using chassis dynamometer or the like. • Starter switch: ON
	Requirements		• Low pulse: 0.5 V or less • High pulse: Approx. 8 V
	Inspection result (Is the judging standard satisfied?)	YES	Go to step 3.
		NO	Go to step 4.

Step 3	Inspection items		Inspection of electronic control unit connector
	Maintenance item		Inspection of connector
	Inspection condition		–
	Requirements		• Connector is properly connected. • No trace of water entry is found. • No corrosion is found in terminal. • Connection to terminal is appropriate.
	Inspection result (Is the judging standard satisfied?)	YES	Go to step 10.
		NO	Modify connector.

Step 4	Inspection items		Inspection of harness between electronic control unit and pulse divider
	Maintenance item		Check circuit between meter cluster connector (DH22A) terminal No. 17 and electronic control unit connector (CY31A) terminal No. 12.
	Inspection condition		Disconnect each device from harness and measure from connection side of harness connector.
	Requirements		There is continuity.
	Inspection result (Is the judging standard satisfied?)	YES	Go to step 5.
		NO	Modify connector.

Step 5	Inspection items		Inspection of sensor unit <25 pulse output>
	Maintenance item		Measure maximum value (high pulse voltage) and minimum value (low pulse voltage) of voltage generated between sensor connector terminals No. 4 (+) and No. 1 (–).
	Inspection condition		Slowly turn sensor shaft with battery voltage applied between terminals No. 2 (+) and No. 1 (–).
	Requirements		• Low pulse: 0.5 V or less • High pulse: Approx. 8 V
	Inspection result (Is the judging standard satisfied?)	YES	Go to step 6.
		NO	Replacement of sensor

<Step 5 inspection diagram>

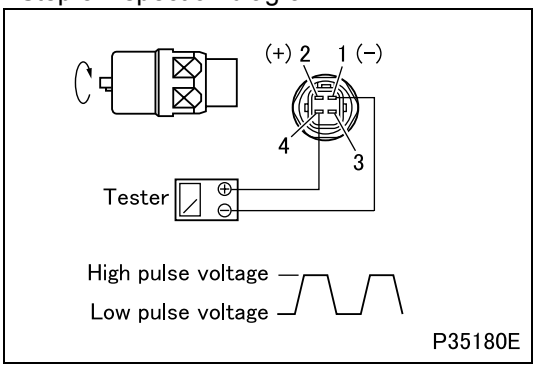

Step 6	Inspection items		Inspection of harness between sensor and fuse (power supply)
	Maintenance item		Check circuit between sensor connector No. 2 and fuse (M02).
	Inspection condition		Disconnect each device from harness and measure from connection side of harness connector.
	Requirements		There is continuity.
	Inspection result (Is the judging standard satisfied?)	YES	Go to step 7.
		NO	Modify harness.

Step 7	Inspection items		Inspection of harness between sensor chassis and ground (ground)
	Maintenance item		Check circuit between sensor connector No. 1 and chassis ground.
	Inspection condition		Disconnect each device from harness and measure from connection side of harness connector.
	Requirements		There is continuity.
	Inspection result (Is the judging standard satisfied?)	YES	Go to step 8.
		NO	Modify harness.

Step 8	Inspection items		Inspection of harness between sensor and pulse divider (signal)
	Maintenance item		Check circuit between sensor connector terminal No. 4 and meter cluster connector (DH22A) terminal No. 11.
	Inspection condition		Disconnect each device from harness and measure from connection side of harness connector.
	Requirements		There is continuity.
	Inspection result (Is the judging standard satisfied?)	YES	Go to step 9.
		NO	Modify harness.

Step 9	Inspection items		Inspection by pulse divider connector
	Maintenance item		Measure value of voltage between meter cluster connector (DH22A) terminal No. 17 (+) and No. 6 (–).
	Inspection condition		• Measure from back side of connector with harness left connected • Remove sensor and slowly turn sensor shaft. • Starter switch: ON
	Requirements		• Low pulse: 0.5 V or less • High pulse: Approx. 8 V
	Inspection result (Is the judging standard satisfied?)	YES	Go to step 10.
		NO	Replacement of meter cluster

Step 10	Inspection items		Inspection by control data
	Maintenance item		**<Multi-Use Tester not used>** Measure value of voltage between connector (CY31A) terminal No. 12 (+) and (CY24A) terminal No. 8 (–). **<Multi-Use Tester used>** Measure item No. 12 “VEH Speed 1” of Service Data.
	Inspection condition		**<Multi-Use Tester not used>** • Measure from back side of harness connector with electronic control unit connected to harness. • Slowly turn the wheel using chassis dynamometer or the like. • Starter switch: ON **<Multi-Use Tester used>** During vehicle run
	Requirements		**<Multi-Use Tester not used>** • Low pulse: 0.5 V or less • High pulse: Approx. 8 V **<Multi-Use Tester used>** Same indication as speedometer is given.
	Inspection result (Is the judging standard satisfied?)	YES	Go to transient fault (See Gr00.).
		NO	Replacement of electronic control unit

[Fault code]
Diagnosis code: P0501/Flash code: 12
[Monitor ID]
2
[Fault (outline)]
Failure of vehicle speed sensor
[Diagnosis check]
- Vehicle speed sensor in control as backup for output speed sensor is monitored for fault with vehicle in running condition.

[Code generation condition]
Vehicle speed sensor is judged faulty in either of the following cases.
- Electronic control unit determines vehicle stop after sudden input of deceleration signal from vehicle speed sensor. (Lamp indication: IMD) <A>
- Abnormality established by comparison with turbine speed sensor and output speed sensor and of output gear ratio has continued for 4 seconds. (Lamp indication: 2DC) <B>

[Diagnosis check timing]
- Fault diagnosis is performed once at the minimum during the driving cycle.

[Diagnostic requirement]
- Vehicle speed sensor related diagnosis code (P0500) does not occur.
- Output speed sensor related diagnosis code (P0721, P0722) does not occur.
- Turbine speed sensor related diagnosis code does not occur.
- Engine speed sensor related diagnosis code does not occur.
- Inhibitor switch related diagnosis code does not occur.
- Control with the fixed speed gear signals outputted under fault conditions is not effected.
- Shift position: except P or N range
- Control at the time of gear shifting is not effected.

[Control effected by electronic control unit during fault]
- The gear last selected is active on a steady basis. <A>
- Normal control is effected using output speed sensor. <B>

[Probable cause of trouble]
- Open-circuit or short-circuit of harness between electronic control unit and pulse divider in meter cluster
- Open-circuit or short-circuit of harness between pulse divider in meter cluster and vehicle speed sensor
- Malfunction of each connector
- Malfunction of pulse divider in meter cluster
- Malfunction of vehicle speed sensor
- Malfunction of electronic control unit

[Recoverability]
- Recovered if signal becomes normal with starter switch in ON position.

[Electronic Control Unit Connection Diagram]

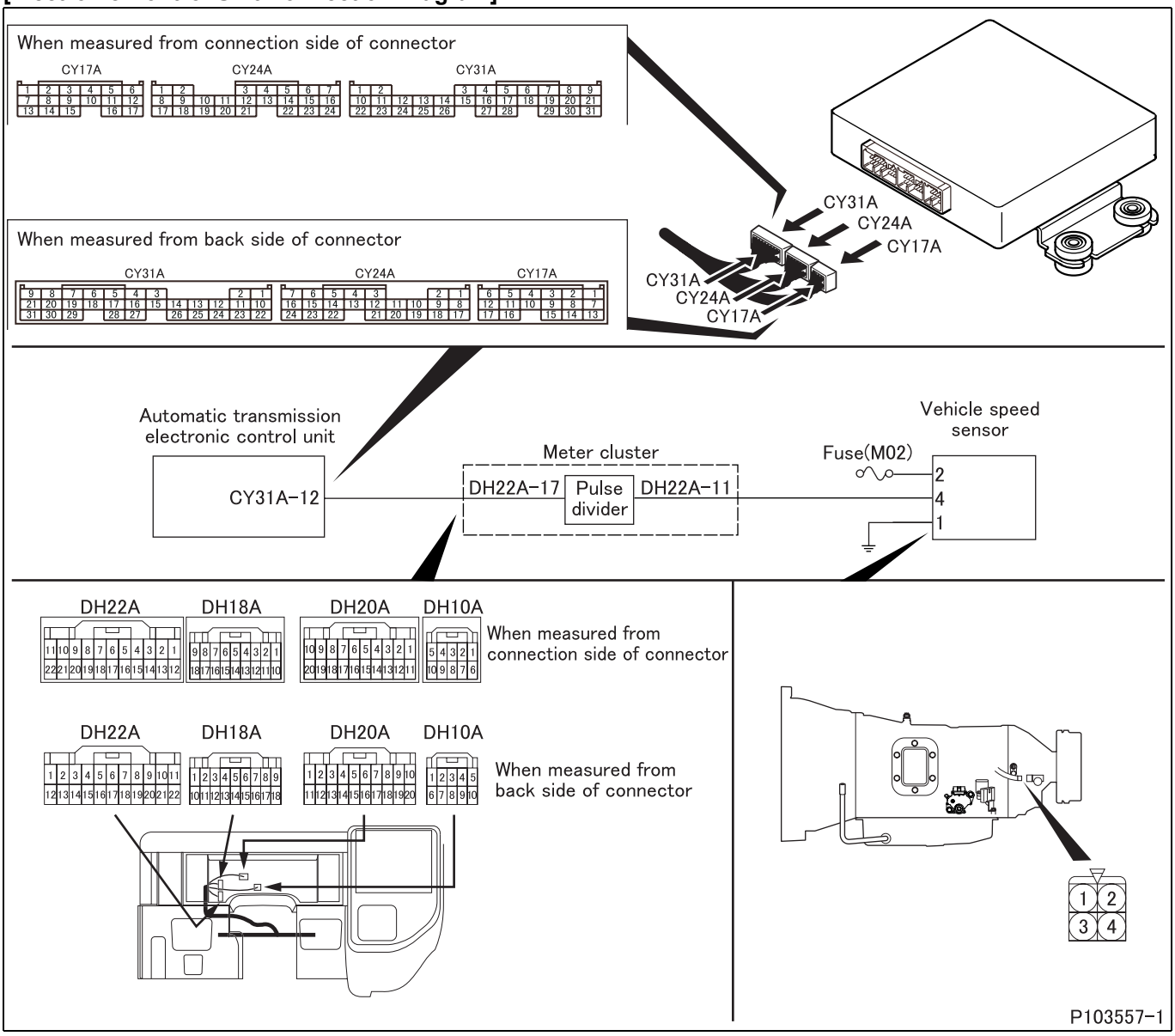

[Parts Identification and Location]

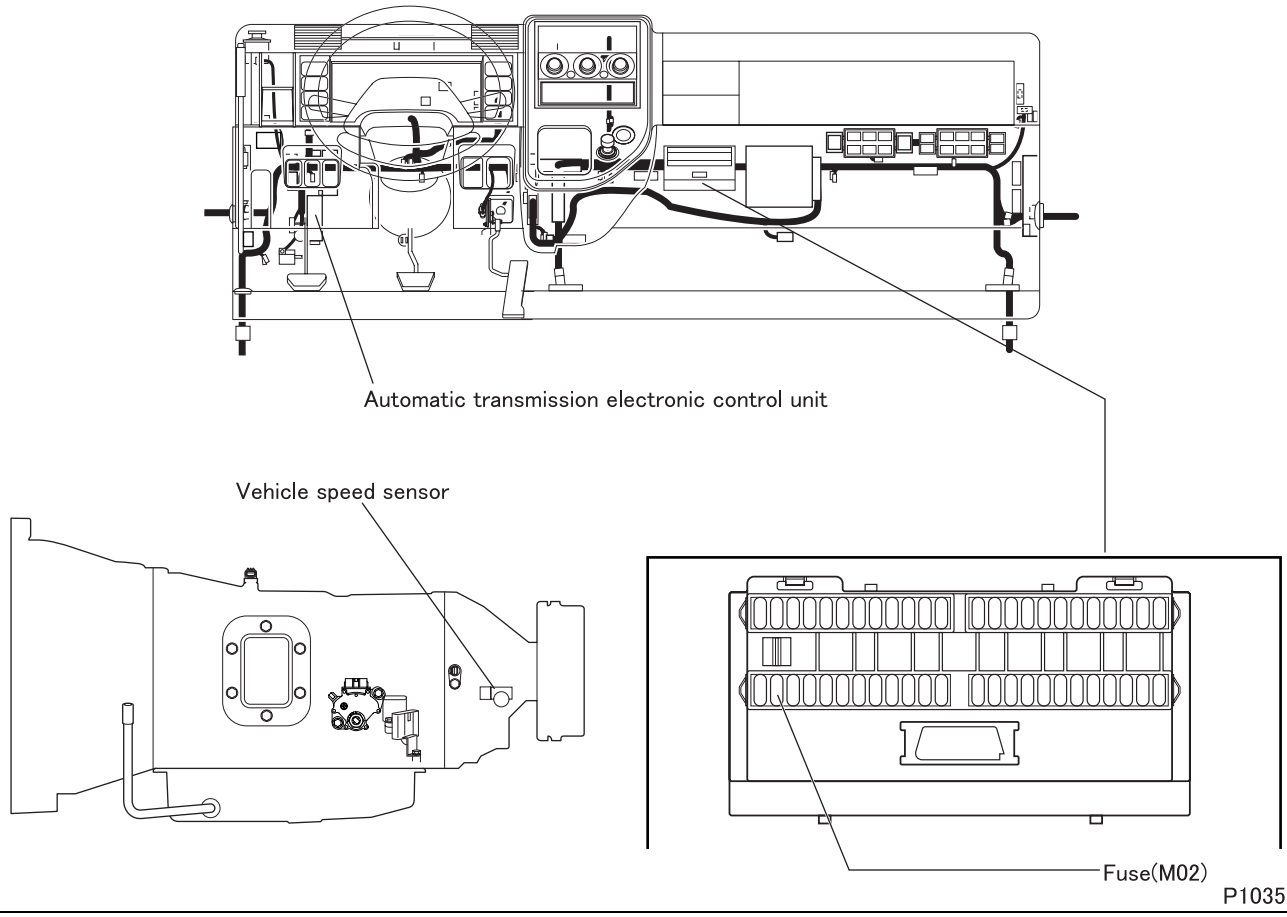

[Fault diagnosis]

- Perform checks in the sequence of the following steps.

Step 1	Inspection items		Inspection by control data
	Maintenance item		**<Multi-Use Tester not used>** Go to step 2. **<Multi-Use Tester used>** Measure item No. 12 “VEH Speed 1” of Service Data.
	Inspection condition		During vehicle run
	Requirements		Same indication as speedometer is given.
	Inspection result (Is the judging standard satisfied?)	YES	Go to transient fault (See Gr00.).
		NO	Go to step 2.

Step 2	Inspection items		Inspection by electronic control unit connector (signal)
	Maintenance item		Measure value of voltage between connector (CY31A) terminal No. 12 (+) and (CY24A) terminal No. 8 (–).
	Inspection condition		• Measure from back side of harness connector with electronic control unit connected to harness. • Slowly turn the wheel using chassis dynamometer or the like. • Starter switch: ON
	Requirements		• Low pulse: 0.5 V or less • High pulse: Approx. 8 V
	Inspection result (Is the judging standard satisfied?)	YES	Go to step 3.
		NO	Go to step 4.

Step 3	Inspection items		Inspection of electronic control unit connector
	Maintenance item		Inspection of connector
	Inspection condition		–
	Requirements		• Connector is properly connected. • No trace of water entry is found. • No corrosion is found in terminal. • Connection to terminal is appropriate.
	Inspection result (Is the judging standard satisfied?)	YES	Go to step 10.
		NO	Modify connector.

Step 4	Inspection items		Inspection of harness between electronic control unit and pulse divider
	Maintenance item		Check circuit between meter cluster connector (DH22A) terminal No. 17 and electronic control unit connector (CY31A) terminal No. 12.
	Inspection condition		Disconnect each device from harness and measure from connection side of harness connector.
	Requirements		There is continuity.
	Inspection result (Is the judging standard satisfied?)	YES	Go to step 5.
		NO	Modify connector.

Step 5	Inspection items		Inspection of sensor unit <25 pulse output>
	Maintenance item		Measure maximum value (high pulse voltage) and minimum value (low pulse voltage) of voltage generated between sensor connector terminals No. 4 (+) and No. 1 (–).
	Inspection condition		Slowly turn sensor shaft with battery voltage applied between terminals No. 2 (+) and No. 1 (–).
	Requirements		• Low pulse: 0.5 V or less • High pulse: Approx. 8 V
	Inspection result (Is the judging standard satisfied?)	YES	Go to step 6.
		NO	Replacement of sensor

<Step 5 inspection diagram>

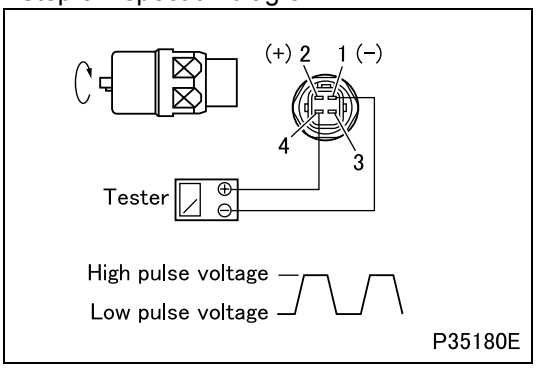

Step 6	Inspection items		Inspection of harness between sensor and fuse (power supply)
	Maintenance item		Check circuit between sensor connector No. 2 and fuse (M02).
	Inspection condition		Disconnect each device from harness and measure from connection side of harness connector.
	Requirements		There is continuity.
	Inspection result (Is the judging standard satisfied?)	YES	Go to step 7.
		NO	Modify harness.

Step 7	Inspection items		Inspection of harness between sensor chassis and ground (ground)
	Maintenance item		Check circuit between sensor connector No. 1 and chassis ground.
	Inspection condition		Disconnect each device from harness and measure from connection side of harness connector.
	Requirements		There is continuity.
	Inspection result (Is the judging standard satisfied?)	YES	Go to step 8.
		NO	Modify harness.

Step 8	Inspection items		Inspection of harness between sensor and pulse divider (signal)
	Maintenance item		Check circuit between sensor connector terminal No. 4 and meter cluster connector (DH22A) terminal No. 11.
	Inspection condition		Disconnect each device from harness and measure from connection side of harness connector.
	Requirements		There is continuity.
	Inspection result (Is the judging standard satisfied?)	YES	Go to step 9.
		NO	Modify harness.

Step 9	Inspection items		Inspection by pulse divider connector
	Maintenance item		Measure value of voltage between meter cluster connector (DH22A) terminal No. 17 (+) and No. 6 (–).
	Inspection condition		• Measure from back side of connector with harness left connected • Remove sensor and slowly turn sensor shaft. • Starter switch: ON
	Requirements		• Low pulse: 0.5 V or less • High pulse: Approx. 8 V
	Inspection result (Is the judging standard satisfied?)	YES	Go to step 10.
		NO	Replacement of meter cluster

Step 10	Inspection items		Inspection by control data
	Maintenance item		**<Multi-Use Tester not used>** Measure value of voltage between connector (CY31A) terminal No.12 (+) and (CY24A) terminal No.8 (–). **<Multi-Use Tester used>** Measure item No. 12 “VEH Speed 1” of Service Data.
	Inspection condition		**<Multi-Use Tester not used>** • Measure from back side of harness connector with electronic control unit connected to harness. • Slowly turn the wheel using chassis dynamometer or the like. • Starter switch: ON **<Multi-Use Tester used>** During vehicle run
	Requirements		**<Multi-Use Tester not used>** • Low pulse: 0.5 V or less • High pulse: Approx. 8 V **<Multi-Use Tester used>** Same indication as speedometer is given.
	Inspection result (Is the judging standard satisfied?)	YES	Go to transient fault (See Gr00.).
		NO	Replacement of electronic control unit

[Fault code]
Diagnosis code: P0562/Flash code: 11
[Monitor ID]
72
[Fault (outline)]
Open-circuit of starter switch ON power supply
[Diagnosis check]
- Engine speed after starter switch is turned OFF is monitored for open-circuit of starter switch ON power supply.

[Code generation condition]
- Engine speed remains higher than 300 rpm for 12 seconds after starter switch is turned OFF.

[Diagnosis check timing]
- Fault diagnosis is performed once when the electronic control unit is powered off.

[Diagnostic requirement]
- Starter switch: OFF

[Control effected by electronic control unit during fault]
- All solenoids are turned OFF and control is effected at fixed speed gear output (3rd or 5th) corresponding to vehicle speed.

[Probable cause of trouble]
- Open-circuit of harness between electronic control unit and starter switch
- Malfunction of each connector
- Malfunction of starter switch
- Malfunction of electronic control unit

[Recoverability]
- Recovered when the starter switch is turned from OFF to ON.

[Electronic Control Unit Connection Diagram]

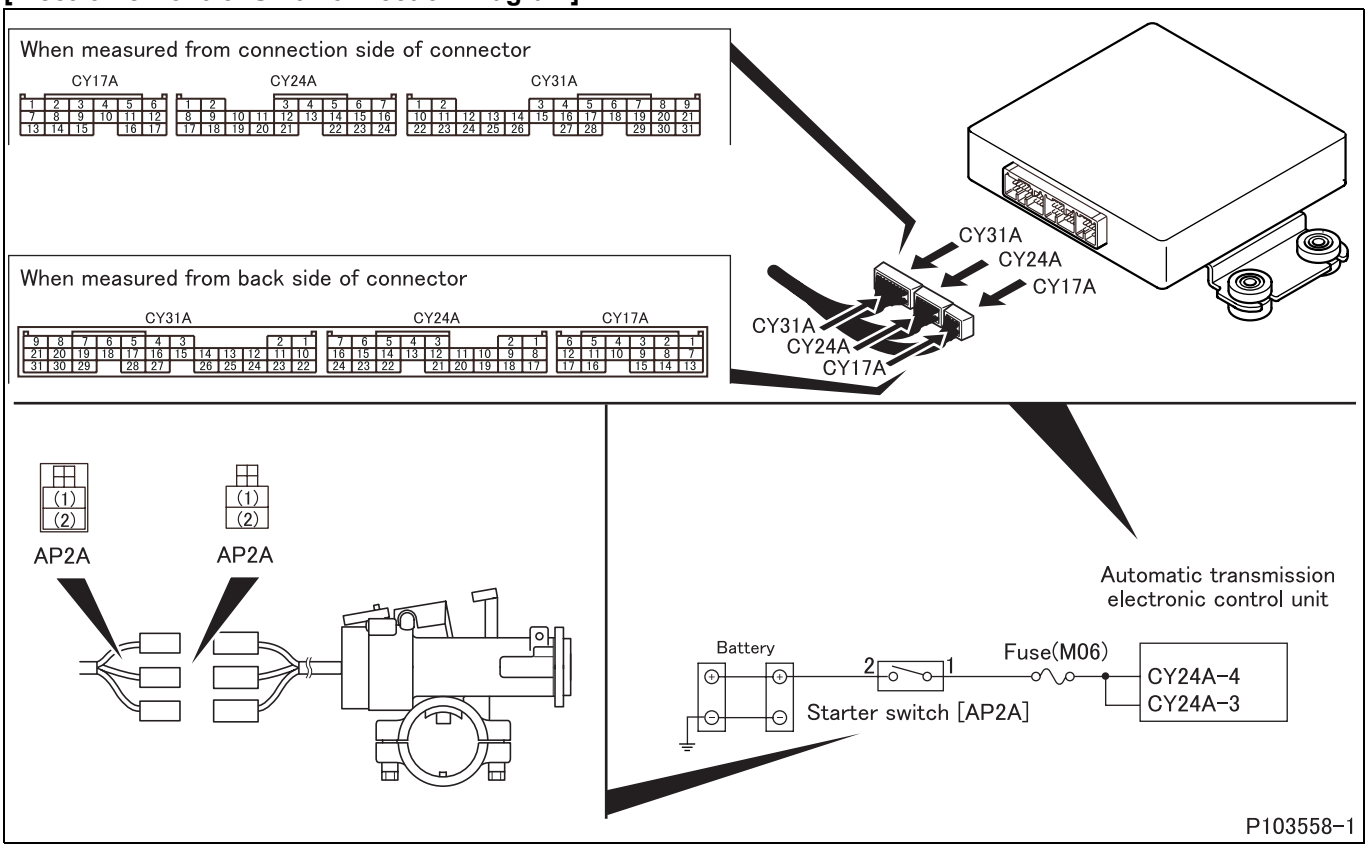

[Parts Identification and Location]

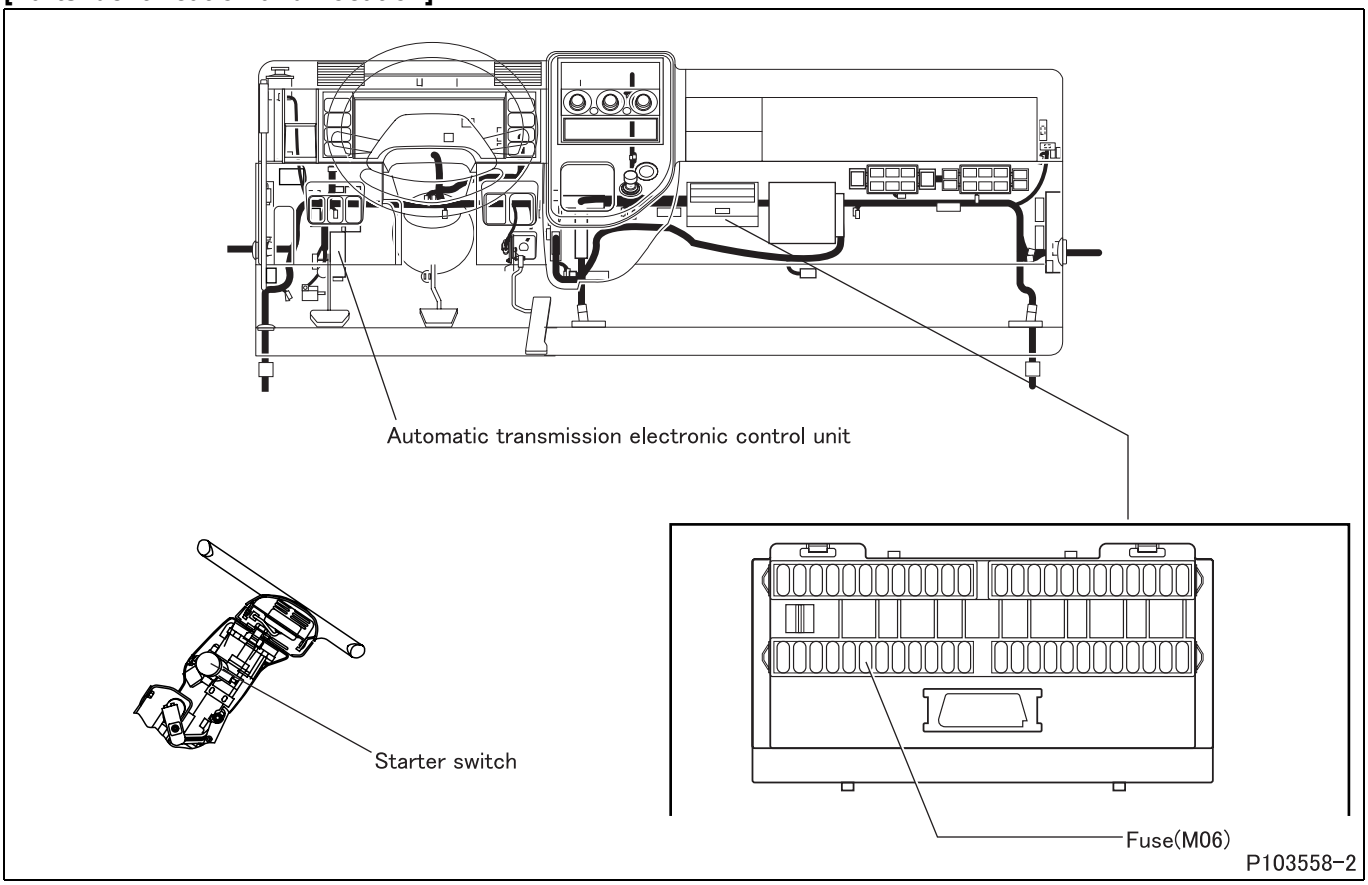

[Fault diagnosis]

- Perform checks in the sequence of the following steps.

Step 1	Inspection items		Inspection by control data
	Maintenance item		**<Multi-Use Tester not used>** Go to step 2. **<Multi-Use Tester used>** Measure item No. 11 “IG” of Service Data.
	Inspection condition		Starter switch: ON
	Requirements		12 V (equivalent to battery voltage)
	Inspection result (Is the judging standard satisfied?)	YES	Go to transient fault (See Gr00.).
		NO	Go to step 2.

Step 2	Inspection items		Inspection by electronic control unit connector (power supply)
	Maintenance item		Measure value of voltage between connector (CY24A) terminal No. 3, 4 (+) and 8 (–).
	Inspection condition		• Measure from back side of harness connector with harness left connected • Engine stopped
	Requirements		• Starter switch ON: 12 V • Starter switch OFF: 0 V
	Inspection result (Is the judging standard satisfied?)	YES	Go to step 3.
		NO	Go to step 4.

Step 3	Inspection items		Inspection of electronic control unit connector
	Maintenance item		Inspection of connector
	Inspection condition		–
	Requirements		• Connector is properly connected. • No trace of water entry is found. • No corrosion is found in terminal. • Connection to terminal is appropriate.
	Inspection result (Is the judging standard satisfied?)	YES	Replacement of electronic control unit
		NO	Modify connector.

Step 4	Inspection items		Inspection of starter switch connector
	Maintenance item		Inspection of connector
	Inspection condition		–
	Requirements		• Connector is properly connected. • No trace of water entry is found. • No corrosion is found in terminal. • Connection to terminal is appropriate.
	Inspection result (Is the judging standard satisfied?)	YES	Go to step 5.
		NO	Modify connector.

Step 5	Inspection items		Inspection by starter switch connector
	Maintenance item		Measure value of voltage between switch connector (AP2A) terminal No. 1 (+) and chassis ground.
	Inspection condition		• Measure from back side of connector with harness left connected • Starter switch: ON
	Requirements		12 V
	Inspection result (Is the judging standard satisfied?)	YES	Go to step 6.
		NO	Go to step 7.

Step 6	Inspection items		Inspection of harness between electronic control unit and starter switch
	Maintenance item		Check circuit between starter switch connector (AP2A) terminal No.1 and electronic control unit connector (CY24A) terminal No. 3, 4
	Inspection condition		Disconnect each device from harness and measure from connection side of harness connector.
	Requirements		There is continuity (Fuse (M06) not blown).
	Inspection result (Is the judging standard satisfied?)	YES	Go to step 10.
		NO	Modify harness.

Step 7	Inspection items		Inspection of starter switch unit
	Maintenance item		Measure continuity between switch connector (AP2A) terminals No. 1 and No. 2.
	Inspection condition		Starter switch: ON
	Requirements		There is continuity.
	Inspection result (Is the judging standard satisfied?)	YES	Go to step 8.
		NO	Replacement of switch

<Step 7 inspection diagram>

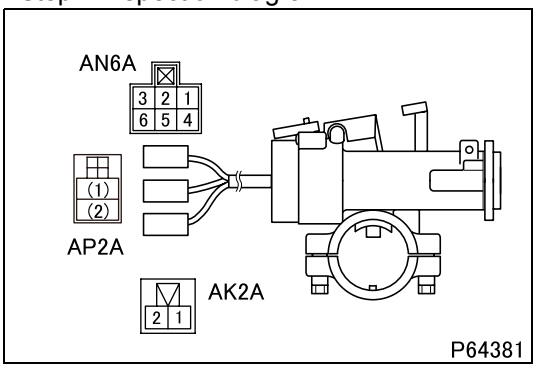

Step 8	Inspection items		Inspection of harness between battery and electronic control unit (power supply)
	Maintenance item		Check circuit between battery terminal (+) and electronic control unit connector (CY24A) terminal No. 3, 4.
	Inspection condition		Disconnect each device from harness and measure from connection side of harness connector.
	Requirements		There is continuity (Fuse (M06) not blown).
	Inspection result (Is the judging standard satisfied?)	YES	Go to step 9.
		NO	Modify harness.

Step 9	Inspection items		Inspection of harness between battery and electronic control unit (ground)
	Maintenance item		Check circuit between battery terminal (–) and electronic control unit connector (CY24A) terminal No. 8, 17.
	Inspection condition		Disconnect each device from harness and measure from connection side of harness connector.
	Requirements		There is continuity.
	Inspection result (Is the judging standard satisfied?)	YES	Go to step 10.
		NO	Modify harness.

Step 10	Inspection items		Inspection by control data
	Maintenance item		**<Multi-Use Tester not used>** Measure value of voltage between connector (CY24A) terminal No. 3, 4 (+) and 8 (–). **<Multi-Use Tester used>** Measure item No. 11 “IG” of Service Data.
	Inspection condition		**<Multi-Use Tester not used>** • Measure from back side of harness connector with harness left connected • Engine stopped **<Multi-Use Tester used>** Starter switch: ON
	Requirements		**<Multi-Use Tester not used>** • Starter switch ON: 12 V • Starter switch OFF: 0 V **<Multi-Use Tester used>** 12 V (equivalent to battery voltage)
	Inspection result (Is the judging standard satisfied?)	YES	Go to transient fault (See Gr00.).
		NO	Replacement of electronic control unit

[Fault code]
Diagnosis code: P0604/Flash code: 91
[Monitor ID]
74
[Fault (outline)]
Failure of electronic control unit
[Diagnosis check]
- Write device (RAM) in electronic control unit is monitored for fault.

[Code generation condition]
- RAM in electronic control unit malfunctions.

[Diagnosis check timing]
- Fault diagnosis is performed once when the electronic control unit is powered on.

[Diagnostic requirement]
- Performed once when electronic control unit is powered up.

[Control effected by electronic control unit during fault]
- All solenoids are turned OFF and control is effected at fixed speed gear output (3rd or 5th) corresponding to vehicle speed.

[Probable cause of trouble]
- Malfunction of electronic control unit (replacement of electronic control unit)

[Recoverability]
- Recovered if signal becomes normal when starter switch is turned OFF to ON (power supply resumed to electronic control unit).

[Fault diagnosis]
- Perform checks in the sequence of the following steps.

Step 1	Inspection items		Clear memory, resume power supply to electronic control unit and check for recurrence of the same diagnosis code.
	Maintenance item		–
	Inspection condition		–
	Requirements		No recurrence detected
	Inspection result (Is the judging standard satisfied?)	YES	Go to transient fault (See Gr00.).
		NO	Replacement of electronic control unit

[Fault code]
Diagnosis code: P0605/Flash code: 92
[Monitor ID]
75
[Fault (outline)]
Failure of electronic control unit
[Diagnosis check]
- Write device (RAM) in electronic control unit is monitored for fault.

[Code generation condition]
- FlashROM in electronic control unit malfunctions.

[Diagnosis check timing]
- Fault diagnosis is performed once when the electronic control unit is powered on.

[Diagnostic requirement]
- Performed once when electronic control unit is powered up.

[Control effected by electronic control unit during fault]
- All solenoids are turned OFF and control is effected at fixed speed gear output (3rd or 5th) corresponding to vehicle speed.

[Probable cause of trouble]
- Malfunction of electronic control unit (replacement of electronic control unit)

[Recoverability]
- Recovered if signal becomes normal when starter switch is turned OFF to ON (power supply resumed to electronic control unit).

[Fault diagnosis]
- Perform checks in the sequence of the following steps.

Step 1	Inspection items		Clear memory, resume power supply to electronic control unit and check for recurrence of the same diagnosis code.
	Maintenance item		–
	Inspection condition		–
	Requirements		No recurrence detected
	Inspection result (Is the judging standard satisfied?)	YES	Go to transient fault (See Gr00.).
		NO	Replacement of electronic control unit

[Fault code]
Diagnosis code: P062F/Flash code: 93
[Monitor ID]
76
[Fault (outline)]
Failure of electronic control unit
[Diagnosis check]
- Write device (RAM) in electronic control unit is monitored for fault.

[Code generation condition]
- EEPROM in electronic control unit malfunctions.

[Diagnosis check timing]
- Fault diagnosis is performed once when the electronic control unit is powered on.

[Diagnostic requirement]
- Performed once when electronic control unit is powered up.

[Control effected by electronic control unit during fault]
- Effects no special control.

[Probable cause of trouble]
- Malfunction of electronic control unit (replacement of electronic control unit)

[Recoverability]
- Recovered if signal becomes normal when starter switch is turned OFF to ON (power supply resumed to electronic control unit).

[Fault diagnosis]
- Perform checks in the sequence of the following steps.

Step 1	Inspection items		Clear memory, resume power supply to electronic control unit and check for recurrence of the same diagnosis code.
	Maintenance item		–
	Inspection condition		–
	Requirements		No recurrence detected
	Inspection result (Is the judging standard satisfied?)	YES	Go to transient fault (See Gr00.).
		NO	Replacement of electronic control unit

[Fault code]
Diagnosis code: P0702/Flash code: 11
[Monitor ID]
73
[Fault (outline)]
Open-circuit of battery power supply
[Diagnosis check]
- When starter switch is turned OFF to ON, electronic control unit determines whether there was abnormality in power supply at last engine start by means of its internal write device (EEPROM).

[Code generation condition]
- Presence of abnormality at last engine start has been written in EEPROM.

[Diagnosis check timing]
- Fault diagnosis is performed once when the electronic control unit is powered on.

[Diagnostic requirement]
- Performed once when electronic control unit is powered up.

[Control effected by electronic control unit during fault]
- No control is effected in particular.

[Probable cause of trouble]
- Open-circuit of battery harness
- Malfunction of each connector
- Malfunction of electronic control unit

[Recoverability]
- Recovered if signal becomes normal when starter switch is turned OFF to ON (power supply resumed to electronic control unit).

[Electronic Control Unit Connection Diagram]

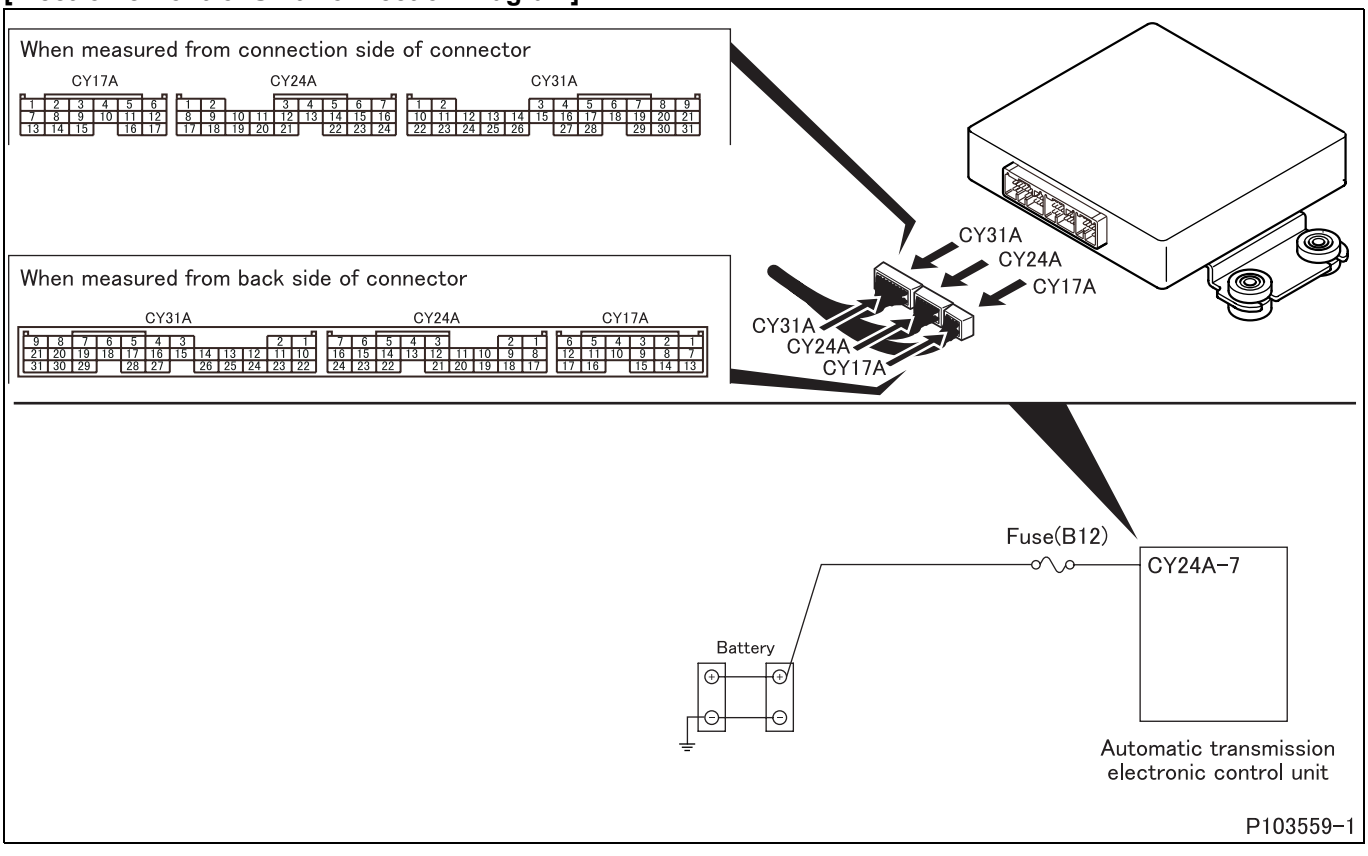

[Parts Identification and Location]

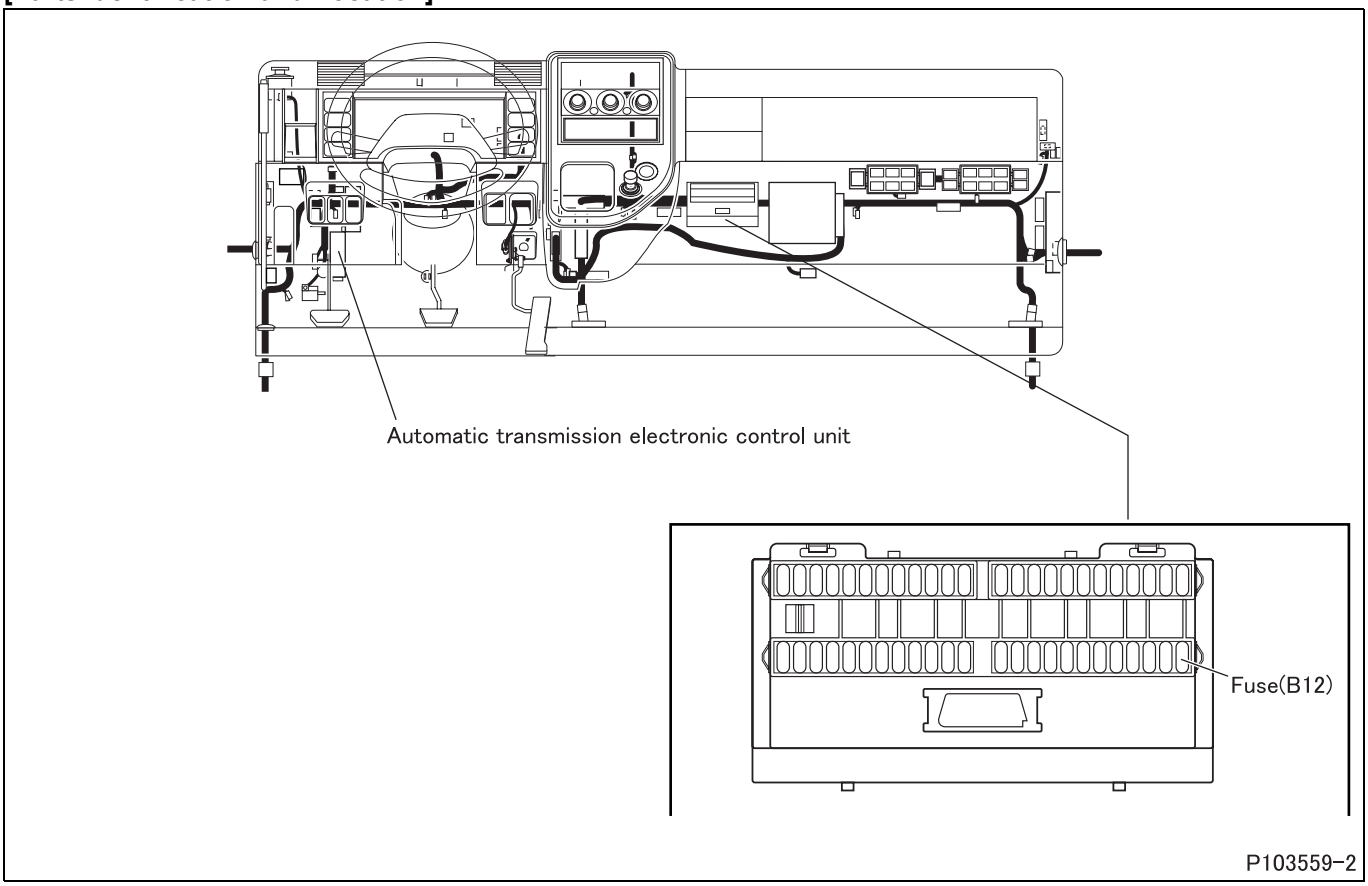

[Fault diagnosis]

- Perform checks in the sequence of the following steps.

Step 1	Inspection items		Inspection by electronic control unit connector (power supply)
	Maintenance item		Measure value of voltage between connector (CY24A) terminal No. 7 (+) and 8 (–).
	Inspection condition		• Measure from back side of harness connector with harness left connected • Engine stopped
	Requirements		12 V
	Inspection result (Is the judging standard satisfied?)	YES	Go to step 2.
		NO	Go to step 3.

Step 2	Inspection items		Inspection of electronic control unit connector
	Maintenance item		Inspection of connector
	Inspection condition		–
	Requirements		• Connector is properly connected. • No trace of water entry is found. • No corrosion is found in terminal. • Connection to terminal is appropriate.
	Inspection result (Is the judging standard satisfied?)	YES	Replacement of electronic control unit
		NO	Modify connector.

Step 3	Inspection items		Inspection of battery terminal
	Maintenance item		Inspection of battery terminal
	Inspection condition		–
	Requirements		• Connector is properly connected. • No corrosion is found in terminal. • Connection to terminal is appropriate.
	Inspection result (Is the judging standard satisfied?)	YES	Go to step 4.
		NO	Modify terminal.

Step 4	Inspection items		Inspection of battery
	Maintenance item		Measure battery terminal voltage.
	Inspection condition		Engine stopped
	Requirements		Approx. 12 V
	Inspection result (Is the judging standard satisfied?)	YES	Go to step 5.
		NO	Modify battery.

<Step 4 inspection diagram>

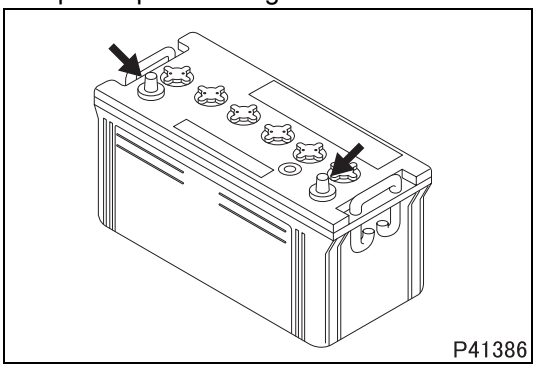

Step 5	Inspection items		Inspection of harness between battery and electronic control unit (power supply)
	Maintenance item		Check circuit between battery terminal (+) and electronic control unit connector (CY24A) terminal No. 7.
	Inspection condition		Disconnect each device from harness and measure from connection side of harness connector.
	Requirements		There is continuity (Fuse (B12) not blown).
	Inspection result (Is the judging standard satisfied?)	YES	Go to step 6.
		NO	Modify harness.

Step 6	Inspection items		Inspection of harness between battery and electronic control unit (ground)
	Maintenance item		Check circuit between battery terminal (–) and electronic control unit connector (CY24A) terminal No. 8, 17.
	Inspection condition		Disconnect each device from harness and measure from connection side of harness connector.
	Requirements		There is continuity.
	Inspection result (Is the judging standard satisfied?)	YES	Go to step 7.
		NO	Modify harness.

Step 7	Inspection items		Inspection by electronic control unit connector (power supply)
	Maintenance item		Measure value of voltage between connector (CY24A) terminal No. 7 (+) and 8 (–).
	Inspection condition		• Measure from back side of harness connector with harness left connected • Engine stopped
	Requirements		12 V
	Inspection result (Is the judging standard satisfied?)	YES	Go to transient fault (See Gr00.).
		NO	Replacement of electronic control unit

[Fault code]
Diagnosis code: P0706/Flash code: 49
[Monitor ID]
49, 50
[Fault (outline)]
Failure of oil pressure switch 8
[Diagnosis check]
- ON/OFF status of oil pressure switch 8 at range shifts is monitored.

[Code generation condition]
- Oil pressure switch 8 remains OFF for 7 seconds for 3 times in 1 TRIP when range is shifted to D, 3 or 2. (Open-circuit) <A>
- Oil pressure switch 8 remains ON for 0.5 second when range is shifted to P, R or N. (Short-circuit) <B>

[Diagnosis check timing]
- Fault diagnosis is performed once at the minimum during the driving cycle.

[Diagnostic requirement]
- Starter switch: ON <A>
- Engine revolution: above 550 rpm (not less than 0.1 sec.) <A>
- Continuous <B>

[Control effected by electronic control unit during fault]
- Control is effected on fixed speed gear output (3rd).

[Probable cause of trouble]
- Open-circuit or short-circuit of harness between electronic control unit and oil pressure switch 8
- Malfunction of each connector
- Malfunction of oil pressure switch 8
- Malfunction of electronic control unit

[Recoverability]
- Recovered if signal becomes normal when starter switch is turned OFF to ON (power supply resumed to electronic control unit).

[Electronic Control Unit Connection Diagram]

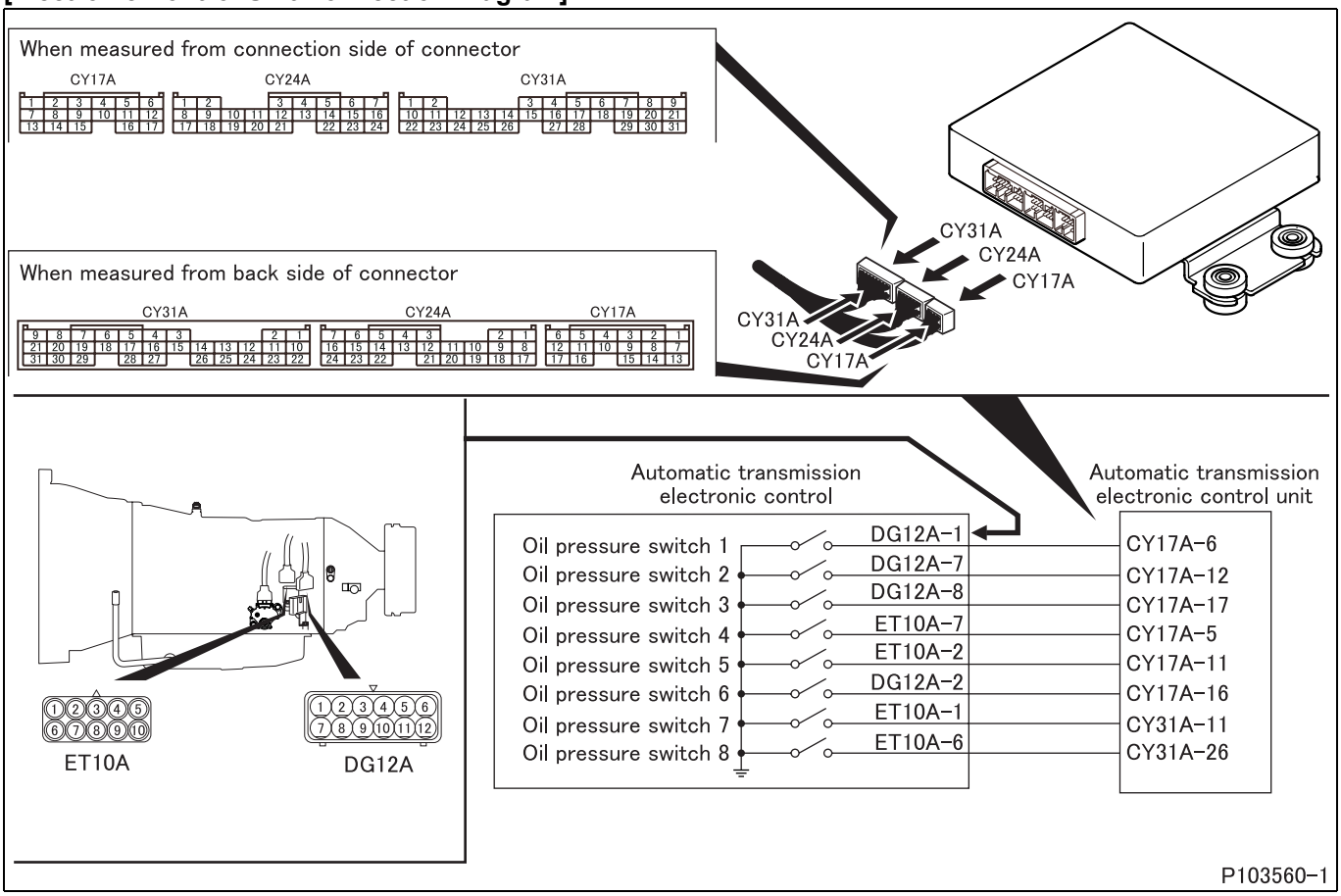

[Parts Identification and Location]

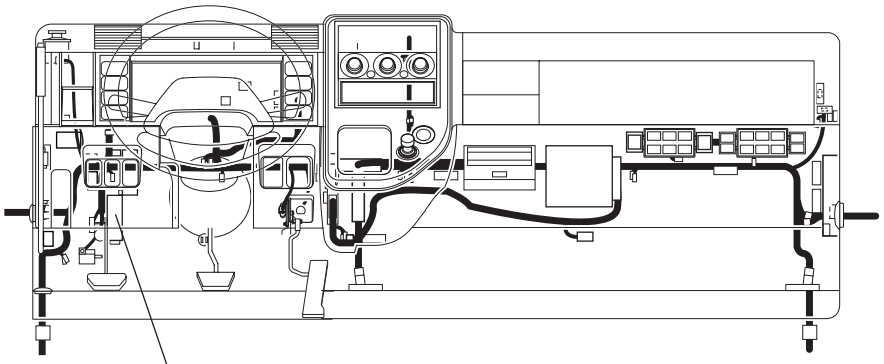

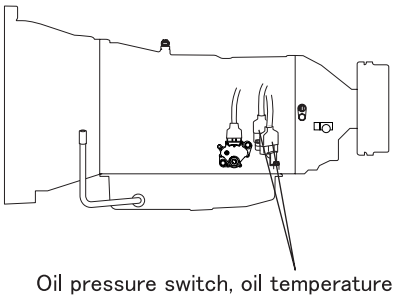

P103560-2

[Fault diagnosis]

- Perform checks in the sequence of the following steps.

Step 1	Inspection items		Inspection by control data
	Maintenance item		**<Multi-Use Tester not used>** Measure value of voltage between electronic control unit connector (CY31A) terminal No. 26 (+) and connector (CY24A) terminal No. 8 (–). **<Multi-Use Tester used>** Measure item No. 68 “Oil Press SW8” of Service Data.
	Inspection condition		Engine in operation **<Multi-Use Tester not used>** Measure from back side of harness connector with electronic control unit connected to harness.
	Requirements		**<Multi-Use Tester not used>** • D range: 0 V • P, R, N range: 12 V **<Multi-Use Tester used>** • D range: ON • P, R, N range: OFF
	Inspection result (Is the judging standard satisfied?)	YES	Go to transient fault (See Gr00.).
		NO	Go to step 2.

Step 2	Inspection items		Inspection by electronic control unit connector (signal)
	Maintenance item		Measure continuity between connector (CY31A) terminal No. 26 and chassis ground.
	Inspection condition		• Disconnect electronic control unit and harness, and measure from connection side of harness connector. • Starter switch: OFF
	Requirements		There is no continuity.
	Inspection result (Is the judging standard satisfied?)	YES	Go to step 3.
		NO	Go to step 4.

Step 3	Inspection items		Inspection of electronic control unit connector
	Maintenance item		Inspection of connector
	Inspection condition		–
	Requirements		• Connector is properly connected. • No trace of water entry is found. • No corrosion is found in terminal. • Connection to terminal is appropriate.
	Inspection result (Is the judging standard satisfied?)	YES	Go to step 7.
		NO	Modify connector.

Step 4	Inspection items		Inspection of switch connector
	Maintenance item		Inspection of connector
	Inspection condition		–
	Requirements		• Connector is properly connected. • No trace of water entry is found. • No corrosion is found in terminal. • Connection to terminal is appropriate.
	Inspection result (Is the judging standard satisfied?)	YES	Go to step 5.
		NO	Modify connector.

Step 5	Inspection items		Inspection of switch unit
	Maintenance item		Check continuity between connector (ET10A) terminal No. 6 and automatic transmission case.
	Inspection condition		• Disconnect connector and measure switch side. • Starter switch: OFF
	Requirements		There is no continuity.
	Inspection result (Is the judging standard satisfied?)	YES	Go to step 6.
		NO	Replacement of automatic transmission

<Step 5 inspection diagram>

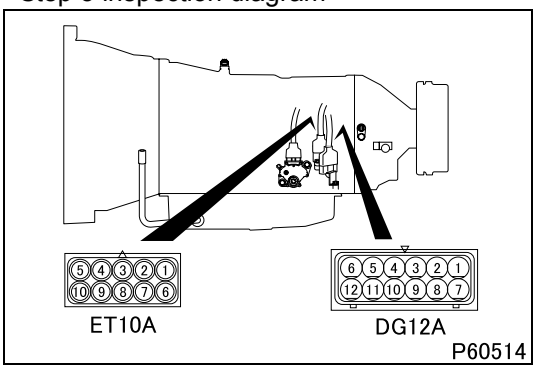

Step 6	Inspection items		Inspection of harness between switch and electronic control unit (signal)
	Maintenance item		Check circuit between connector (ET10A) terminal No. 6 and electronic control unit connector (CY31A) terminal No. 26
	Inspection condition		Disconnect each device from harness and measure from connection side of harness connector.
	Requirements		There is continuity.
	Inspection result (Is the judging standard satisfied?)	YES	Go to step 7.
		NO	Modify harness.

Step 7	Inspection items		Inspection by control data
	Maintenance item		**<Multi-Use Tester not used>** Measure value of voltage between electronic control unit connector (CY31A) terminal No. 26 (+) and connector (CY24A) terminal No. 8 (–). **<Multi-Use Tester used>** Measure item No. 68 “Oil Press SW8” of Service Data.
	Inspection condition		Engine in operation **<Multi-Use Tester not used>** Measure from back side of harness connector with electronic control unit connected to harness.
	Requirements		**<Multi-Use Tester not used>** • D range: 0 V • P, R, N range: 12 V **<Multi-Use Tester used>** • D range: ON • P, R, N range: OFF
	Inspection result (Is the judging standard satisfied?)	YES	Go to transient fault (See Gr00.).
		NO	Replacement of electronic control unit

[Fault code]
Diagnosis code: P0707/Flash code: 43
[Monitor ID]
19
[Fault (outline)]
Failure of inhibitor switch
[Diagnosis check]
- Inhibitor switch output is monitored under conditions below for open-circuit.
- Condition (1): Oil pressure switch 8 in OFF position.
- Condition (2): When range shifted

[Code generation condition]
- With oil pressure switch 8 in OFF position, all P, R and N output signals are not input from inhibitor switch for 2 consecutive seconds. <A>
- All P, R and N output signals are not input from inhibitor switch for 30 consecutive seconds. <B>
- Either R or N output signal is not input from inhibitor switch. <C>

[Diagnosis check timing]
- Fault diagnosis is continuously performed.

[Diagnostic requirement]
- Starter switch: ON

[Control effected by electronic control unit during fault]
- Control is effected on fixed speed gear output (3rd). <A, C>
- No control is effected in particular. <B>

[Probable cause of trouble]
- Open-circuit or short-circuit of harness between electronic control unit and inhibitor switch
- Malfunction of each connector
- Malfunction of inhibitor switch
- Maladjustment of selector cable
- Malfunction of electronic control unit

[Recoverability]
- Recovered if signal becomes normal when starter switch is turned OFF to ON (power supply resumed to electronic control unit). <A>
- Recovered if signal becomes normal with starter switch in ON position. <B, C>

[Electronic Control Unit Connection Diagram]

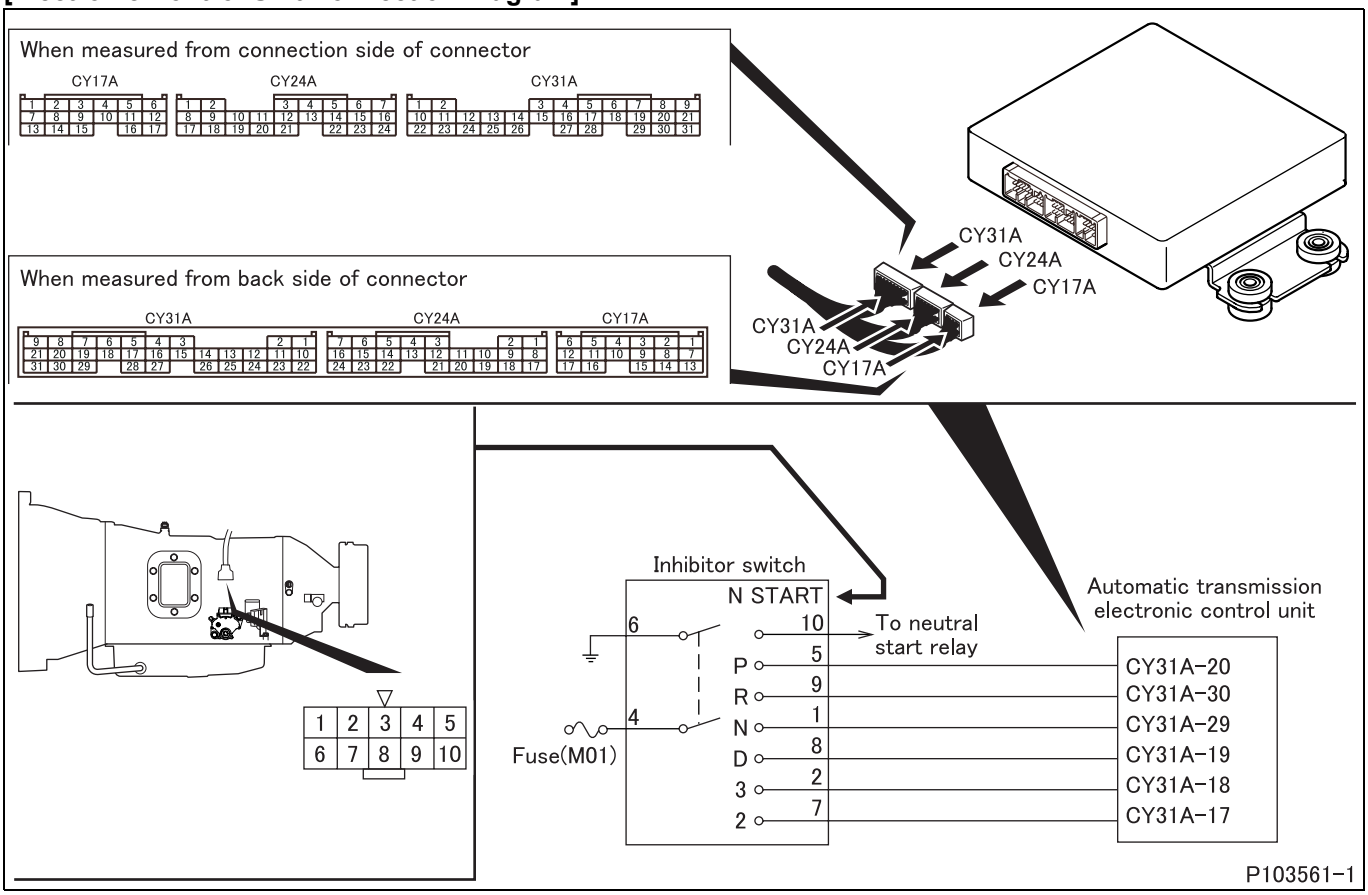

[Parts Identification and Location]

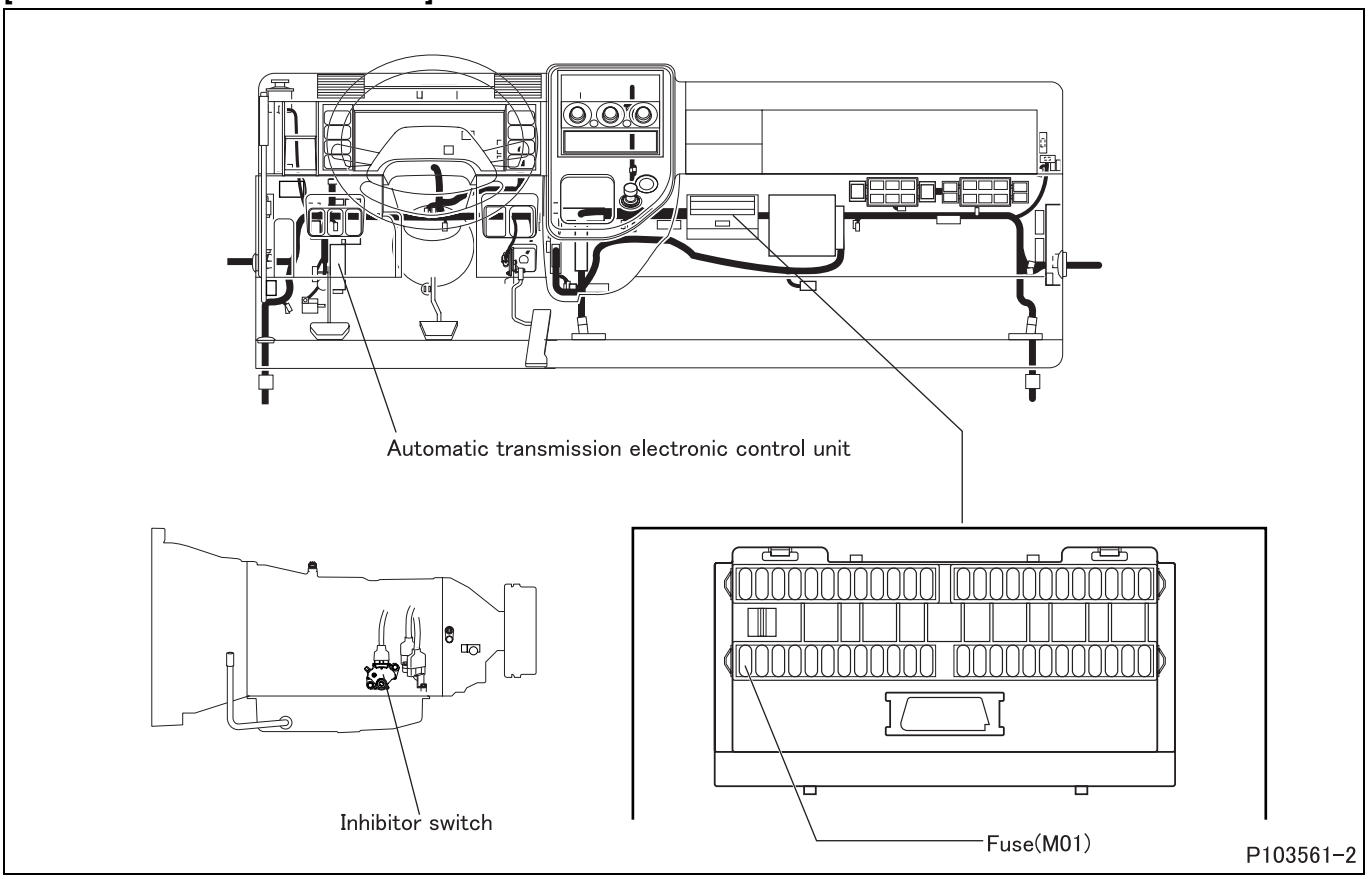

[Fault diagnosis]

- Perform checks in the sequence of the following steps.

Step 1	Inspection items		Inspection by control data
	Maintenance item		**<Multi-Use Tester not used>** Go to step 2. **<Multi-Use Tester used>** Measure item No. 19 “P Pos.SW”, No. 20 “R Pos.SW”, No. 21 “N Pos.SW”, No. 22 “D Pos.SW”, No. 24 “3 Pos.SW”, No. 55 “Selector Pos.”, No. 78 “2 Pos.SW” of Service Data.
	Inspection condition		–
	Requirements		Synchronous with shift of range selector lever position.
	Inspection result (Is the judging standard satisfied?)	YES	Go to transient fault (See Gr00.).
		NO	Go to step 2.

Step 2	Inspection items		Inspection by electronic control unit connector (signal)
	Maintenance item		<Range selector in P position> Measure value of voltage between connector (CY31A) terminal No. 20 (+) and (CY24A) terminal No. 8 (–). <Range selector in R position> Measure value of voltage between connector (CY31A) terminal No. 30 (+) and (CY24A) terminal No. 8 (–). <Range selector in N position> Measure value of voltage between connector (CY31A) terminal No. 29 (+) and (CY24A) terminal No. 8 (–). <Range selector in D position> Measure value of voltage between connector (CY31A) terminal No. 19 (+) and (CY24A) terminal No. 8 (–). <Range selector in 3rd position> Measure value of voltage between connector (CY31A) terminal No. 18 (+) and (CY24A) terminal No. 8 (–). <Range selector in 2nd position> Measure value of voltage between connector (CY31A) terminal No. 17 (+) and (CY24A) terminal No. 8 (–).
	Inspection condition		• Measure from back side of harness connector with harness left connected • Starter switch: ON • Check with range selector in each position.
	Requirements		12 V
	Inspection result (Is the judging standard satisfied?)	YES	Go to step 3.
		NO	Go to step 4.

Step 3	Inspection items		Inspection of electronic control unit connector
	Maintenance item		Inspection of connector
	Inspection condition		–
	Requirements		• Connector is properly connected. • No trace of water entry is found. • No corrosion is found in terminal. • Connection to terminal is appropriate.
	Inspection result (Is the judging standard satisfied?)	YES	Replacement of electronic control unit
		NO	Modify connector.

Step 4	Inspection items		Inspection of inhibitor switch connector
	Maintenance item		Inspection of connector
	Inspection condition		–
	Requirements		• Connector is properly connected. • No trace of water entry is found. • No corrosion is found in terminal. • Connection to terminal is appropriate.
	Inspection result (Is the judging standard satisfied?)	YES	Go to step 5.
		NO	Modify connector.

Step 5	Inspection items		Inspection of inhibitor switch unit
	Maintenance item		**<P>** • Measure continuity between terminals No. 4 and No. 5 and between terminals No. 6 and No. 10. **<R>** • Measure continuity between terminals No. 4 and No. 9. **<N>** • Measure continuity between terminals No. 1 and No. 4 and between terminals No. 6 and No. 10. **<D>** • Measure continuity between terminals No. 4 and No. 8. **<3>** • Measure continuity between terminals No. 2 and No. 4. **<2>** • Measure continuity between terminals No. 4 and No. 7.
	Inspection condition		• Keep switch installed on vehicle. • Shift range selector lever from one range position to another and measure continuity each time. • Starter switch: ON
	Requirements		There is continuity.
	Inspection result (Is the judging standard satisfied?)	YES	Go to step 6.
		NO	Replacement of switch

<Step 5 inspection diagram>

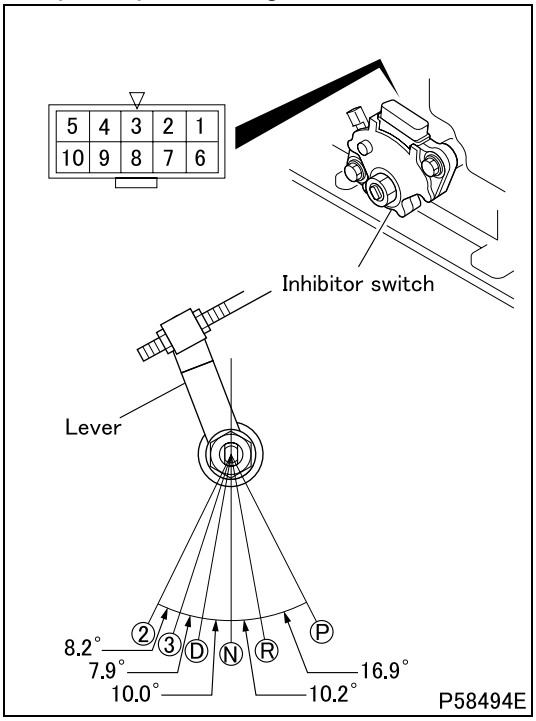

Step 6	Inspection items		Inspection of harness between inhibitor switch and electronic control unit (signal)
	Maintenance item		**<P>** • Check circuit between switch connector terminal No. 5 and electronic control unit connector (CY31A) terminal No. 20 **<R>** • Check circuit between switch connector terminal No. 9 and electronic control unit connector (CY31A) terminal No. 30 **<N>** • Check circuit between switch connector terminal No. 1 and electronic control unit connector (CY31A) terminal No. 29 **<D>** • Check circuit between switch connector terminal No. 8 and electronic control unit connector (CY31A) terminal No. 19 **<3>** • Check circuit between switch connector terminal No. 2 and electronic control unit connector (CY31A) terminal No. 18 **<2>** • Check circuit between switch connector terminal No. 7 and electronic control unit connector (CY31A) terminal No. 17
	Inspection condition		Disconnect each device from harness and measure from connection side of harness connector.
	Requirements		There is continuity.
	Inspection result (Is the judging standard satisfied?)	YES	Go to step 7.
		NO	Modify harness.

Step 7	Inspection items		Inspection of harness between inhibitor switch and fuse (power supply)
	Maintenance item		Check circuit between switch connector terminal No. 4 and fuse (M01)
	Inspection condition		Disconnect each device from harness and measure from connection side of harness connector.
	Requirements		There is continuity.
	Inspection result (Is the judging standard satisfied?)	YES	Go to step 8.
		NO	Modify harness.

Step 8	Inspection items		Inspection by control data
	Maintenance item		**<Multi-Use Tester not used>** <Range selector in P position> Measure value of voltage between connector (CY31A) terminal No. 20 (+) and (CY24A) terminal No. 8 (–). <Range selector in R position> Measure value of voltage between connector (CY31A) terminal No. 30 (+) and (CY24A) terminal No. 8 (–). <Range selector in N position> Measure value of voltage between connector (CY31A) terminal No. 29 (+) and (CY24A) terminal No. 8 (–). <Range selector in D position> Measure value of voltage between connector (CY31A) terminal No. 19 (+) and (CY24A) terminal No. 8 (–). <Range selector in 3rd position> Measure value of voltage between connector (CY31A) terminal No. 18 (+) and (CY24A) terminal No. 8 (–). <Range selector in 2nd position> Measure value of voltage between connector (CY31A) terminal No. 17 (+) and (CY24A) terminal No. 8 (–). **<Multi-Use Tester used>** Measure item No. 19 “P Pos.SW”, No. 20 “R Pos.SW”, No. 21 “N Pos.SW”, No. 22 “D Pos.SW”, No. 24 “3 Pos.SW”, No. 55 “Selector Pos.”, No. 78 “2 Pos.SW” of Service Data.
	Inspection condition		**<Multi-Use Tester not used>** • Measure from back side of harness connector with harness left connected • Starter switch: ON • Check with range selector in each position.
	Requirements		**<Multi-Use Tester not used>** 12 V **<Multi-Use Tester used>** Synchronous with shift of range selector lever position.
	Inspection result (Is the judging standard satisfied?)	YES	Go to transient fault (See Gr00.).
		NO	Check selector cables for incorrectly adjusted condition and adjust the cable if it is defective. If the fault is still not removed, replace the electronic control unit.

[Fault code]
Diagnosis code: P0708/Flash code: 43
[Monitor ID]
20
[Fault (outline)]
Failure of inhibitor switch
[Diagnosis check]
- Inhibitor switch output signal is monitored.

[Code generation condition]
- Two or more of inhibitor switch output signals P, R, N, D, 3 and 2 are continuously input for 0.5 second.

[Diagnosis check timing]
- Fault diagnosis is continuously performed.

[Diagnostic requirement]
- Starter switch: ON

[Control effected by electronic control unit during fault]
- Control is effected on fixed speed gear output (3rd).

[Probable cause of trouble]
- Open-circuit or short-circuit of harness between electronic control unit and inhibitor switch
- Malfunction of each connector
- Malfunction of inhibitor switch
- Malfunction of electronic control unit

[Recoverability]
- Recovered if signal becomes normal when starter switch is turned OFF to ON (power supply resumed to electronic control unit).

[Electronic Control Unit Connection Diagram]

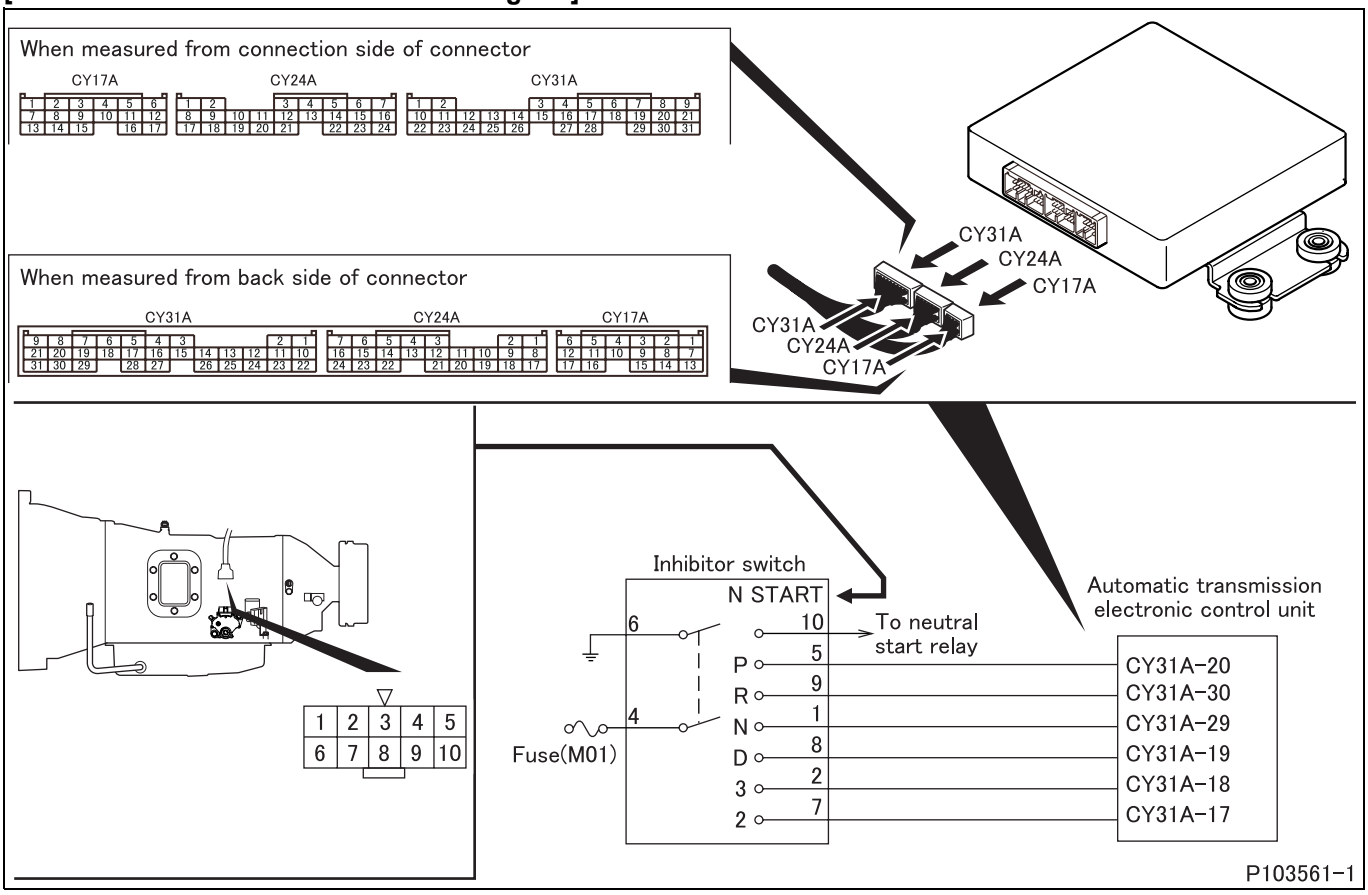

[Parts Identification and Location]

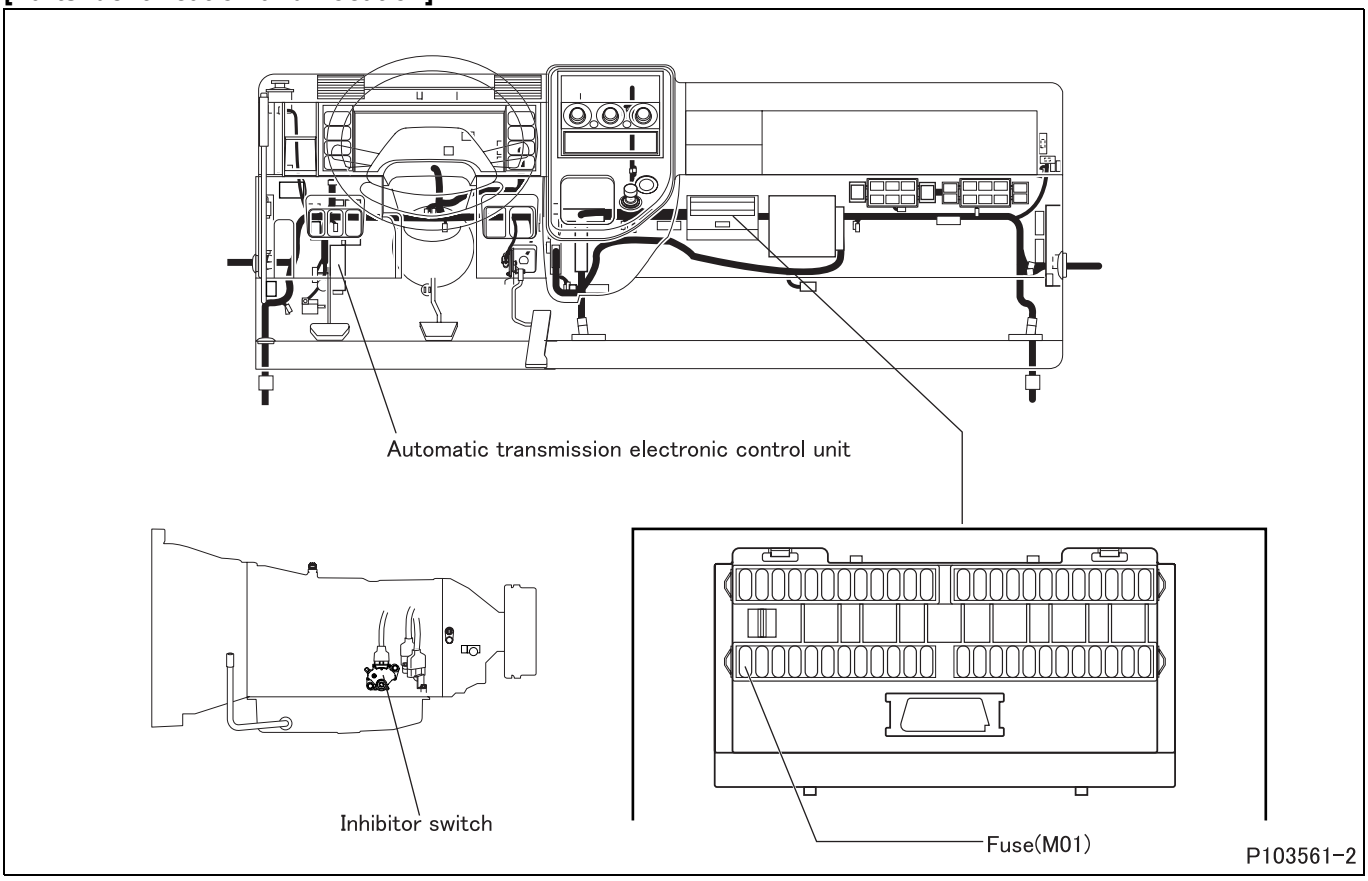

[Fault diagnosis]

- Perform checks in the sequence of the following steps.

Step 1	Inspection items		Inspection by control data
	Maintenance item		**<Multi-Use Tester not used>** Go to step 2. **<Multi-Use Tester used>** Measure item No. 19 “P Pos.SW”, No. 20 “R Pos.SW”, No. 21 “N Pos.SW”, No. 22 “D Pos.SW”, No. 24 “3 Pos.SW”, No. 55 “Selector Pos.”, No. 78 “2 Pos.SW” of Service Data.
	Inspection condition		–
	Requirements		Synchronous with shift of range selector lever position.
	Inspection result (Is the judging standard satisfied?)	YES	Go to transient fault (See Gr00.).
		NO	Go to step 2.

Step 2	Inspection items		Inspection by electronic control unit connector (signal)
	Maintenance item		<Range selector in P position> Measure value of voltage between connector (CY31A) terminal No. 20 (+) and (CY24A) terminal No. 8 (–). <Range selector in R position> Measure value of voltage between connector (CY31A) terminal No. 30 (+) and (CY24A) terminal No. 8 (–). <Range selector in N position> Measure value of voltage between connector (CY31A) terminal No. 29 (+) and (CY24A) terminal No. 8 (–). <Range selector in D position> Measure value of voltage between connector (CY31A) terminal No. 19 (+) and (CY24A) terminal No. 8 (–). <Range selector in 3rd position> Measure value of voltage between connector (CY31A) terminal No. 18 (+) and (CY24A) terminal No. 8 (–). <Range selector in 2nd position> Measure value of voltage between connector (CY31A) terminal No. 17 (+) and (CY24A) terminal No. 8 (–).
	Inspection condition		• Measure from back side of harness connector with harness left connected • Starter switch: ON • Check with range selector in each position.
	Requirements		12 V
	Inspection result (Is the judging standard satisfied?)	YES	Go to step 3.
		NO	Go to step 4.

Step 3	Inspection items		Inspection of electronic control unit connector
	Maintenance item		Inspection of connector
	Inspection condition		–
	Requirements		• Connector is properly connected. • No trace of water entry is found. • No corrosion is found in terminal. • Connection to terminal is appropriate.
	Inspection result (Is the judging standard satisfied?)	YES	Replacement of electronic control unit
		NO	Modify connector.

Step 4	Inspection items		Inspection of inhibitor switch connector
	Maintenance item		Inspection of connector
	Inspection condition		–
	Requirements		• Connector is properly connected. • No trace of water entry is found. • No corrosion is found in terminal. • Connection to terminal is appropriate.
	Inspection result (Is the judging standard satisfied?)	YES	Go to step 5.
		NO	Modify connector.

Step 5	Inspection items		Inspection of inhibitor switch unit
	Maintenance item		**<P>** • Measure continuity between terminals No. 4 and No. 5 and between terminals No. 6 and No. 10. **<R>** • Measure continuity between terminals No. 4 and No. 9. **<N>** • Measure continuity between terminals No. 1 and No. 4 and between terminals No. 6 and No. 10. **<D>** • Measure continuity between terminals No. 4 and No. 8. **<3>** • Measure continuity between terminals No. 2 and No. 4. **<2>** • Measure continuity between terminals No. 4 and No. 7.
	Inspection condition		• Keep switch installed on vehicle. • Shift range selector lever from one range position to another and measure continuity each time. • Starter switch: ON
	Requirements		There is continuity.
	Inspection result (Is the judging standard satisfied?)	YES	Go to step 6.
		NO	Replacement of switch

<Step 5 inspection diagram>

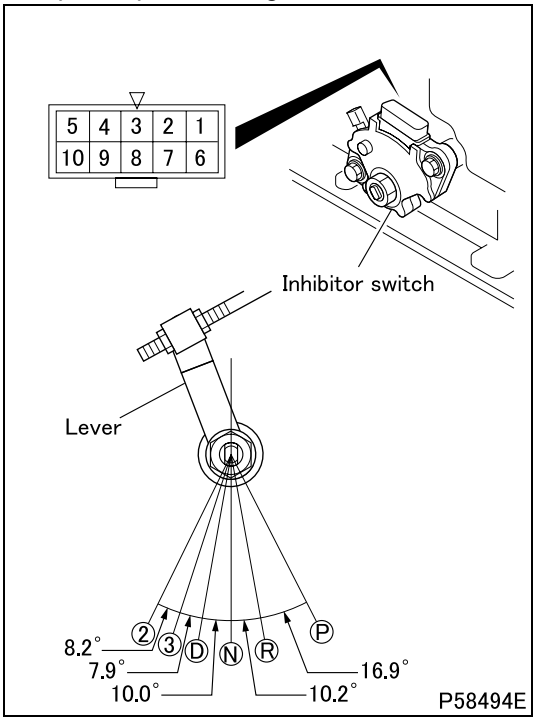

Step 6	Inspection items		Inspection of harness between inhibitor switch and electronic control unit (signal)
	Maintenance item		**<P>** • Check circuit between switch connector terminal No. 5 and electronic control unit connector (CY31A) terminal No. 20 **<R>** • Check circuit between switch connector terminal No. 9 and electronic control unit connector (CY31A) terminal No. 30 **<N>** • Check circuit between switch connector terminal No. 1 and electronic control unit connector (CY31A) terminal No. 29 **<D>** • Check circuit between switch connector terminal No. 8 and electronic control unit connector (CY31A) terminal No. 19 **<3>** • Check circuit between switch connector terminal No. 2 and electronic control unit connector (CY31A) terminal No. 18 **<2>** • Check circuit between switch connector terminal No. 7 and electronic control unit connector (CY31A) terminal No. 17
	Inspection condition		Disconnect each device from harness and measure from connection side of harness connector.
	Requirements		There is continuity.
	Inspection result (Is the judging standard satisfied?)	YES	Go to step 7.
		NO	Modify harness.

Step 7	Inspection items		Inspection of harness between inhibitor switch and fuse (power supply)
	Maintenance item		Check circuit between switch connector terminal No. 4 and fuse (M01)
	Inspection condition		Disconnect each device from harness and measure from connection side of harness connector.
	Requirements		There is continuity.
	Inspection result (Is the judging standard satisfied?)	YES	Go to step 8.
		NO	Modify harness.

Step 8	Inspection items		Inspection by control data
	Maintenance item		**<Multi-Use Tester not used>** <Range selector in P position> Measure value of voltage between connector (CY31A) terminal No. 20 (+) and (CY24A) terminal No. 8 (–). <Range selector in R position> Measure value of voltage between connector (CY31A) terminal No. 30 (+) and (CY24A) terminal No. 8 (–). <Range selector in N position> Measure value of voltage between connector (CY31A) terminal No. 29 (+) and (CY24A) terminal No. 8 (–). <Range selector in D position> Measure value of voltage between connector (CY31A) terminal No. 19 (+) and (CY24A) terminal No. 8 (–). <Range selector in 3rd position> Measure value of voltage between connector (CY31A) terminal No. 18 (+) and (CY24A) terminal No. 8 (–). <Range selector in 2nd position> Measure value of voltage between connector (CY31A) terminal No. 17 (+) and (CY24A) terminal No. 8 (–). **<Multi-Use Tester used>** Measure item No. 19 “P Pos.SW”, No. 20 “R Pos.SW”, No. 21 “N Pos.SW”, No. 22 “D Pos.SW”, No. 24 “3 Pos.SW”, No. 55 “Selector Pos.”, No. 78 “2 Pos.SW” of Service Data.
	Inspection condition		**<Multi-Use Tester not used>** • Measure from back side of harness connector with harness left connected • Starter switch: ON • Check with range selector in each position.
	Requirements		**<Multi-Use Tester not used>** 12 V **<Multi-Use Tester used>** Synchronous with shift of range selector lever position.
	Inspection result (Is the judging standard satisfied?)	YES	Go to transient fault (See Gr00.).
		NO	Replacement of electronic control unit

[Fault code]
Diagnosis code: P0711/Flash code: 13
[Monitor ID]
13, 14
[Fault (outline)]
Failure of oil temperature sensor (inside)
[Diagnosis check]
- Automatic transmission fluid temperature immediately after starter switch is turned ON is monitored. <A>
- Automatic transmission fluid temperature during engine warm-up is monitored. <B>

[Code generation condition]
- Detected temperature of oil temperature sensor (inside) is less than –10°C {14°F} even after specified time of vehicle run. <A>
- Detected temperature of oil temperature sensor (inside) does not change by any more than 2°C {36°F}. <B>

[Diagnosis check timing]
- Fault diagnosis is performed once at the minimum during the driving cycle.

[Diagnostic requirement]
- Automatic transmission fluid temperature 1 sec. after the starter switch is turned from ON position: –50°C {–56°F} to –10°C {14°F} <A>
- Engine coolant temperature 1 sec. after the starter switch is turned from ON position: 70°C {160°F} or more <B>
- Temperature change in the engine coolant after the starter switch is turned to ON position: above 50°C {120°F} <B>
- Automatic transmission fluid temperature 1 sec. after the starter switch is turned from ON position: –50°C {–56°F} to 40°C {105°F} <B>
- Starter switch ON battery voltage: 10 V to 16 V
- Controller area network: Normal
- Elapsed time when the engine speed calculated from the output speed sensor signals exceeds 300 rpm: above 410 sec.

[Control effected by electronic control unit during fault]
- Control is effected on basis of low oil temperature (–30°C {–24°F}) immediately after starter switch is turned ON and normal oil temperature (80°C {175°F}) 5 minutes later.
- Braking force control is inhibited.

[Probable cause of trouble]
- Open-circuit or short-circuit of harness between electronic control unit and oil temperature sensor (inside)
- Malfunction of each connector
- Malfunction of oil temperature sensor (inside)
- Malfunction of electronic control unit

[Recoverability]
- Recovered if signal becomes normal when starter switch is turned OFF to ON (power supply resumed to electronic control unit).

[Electronic Control Unit Connection Diagram]

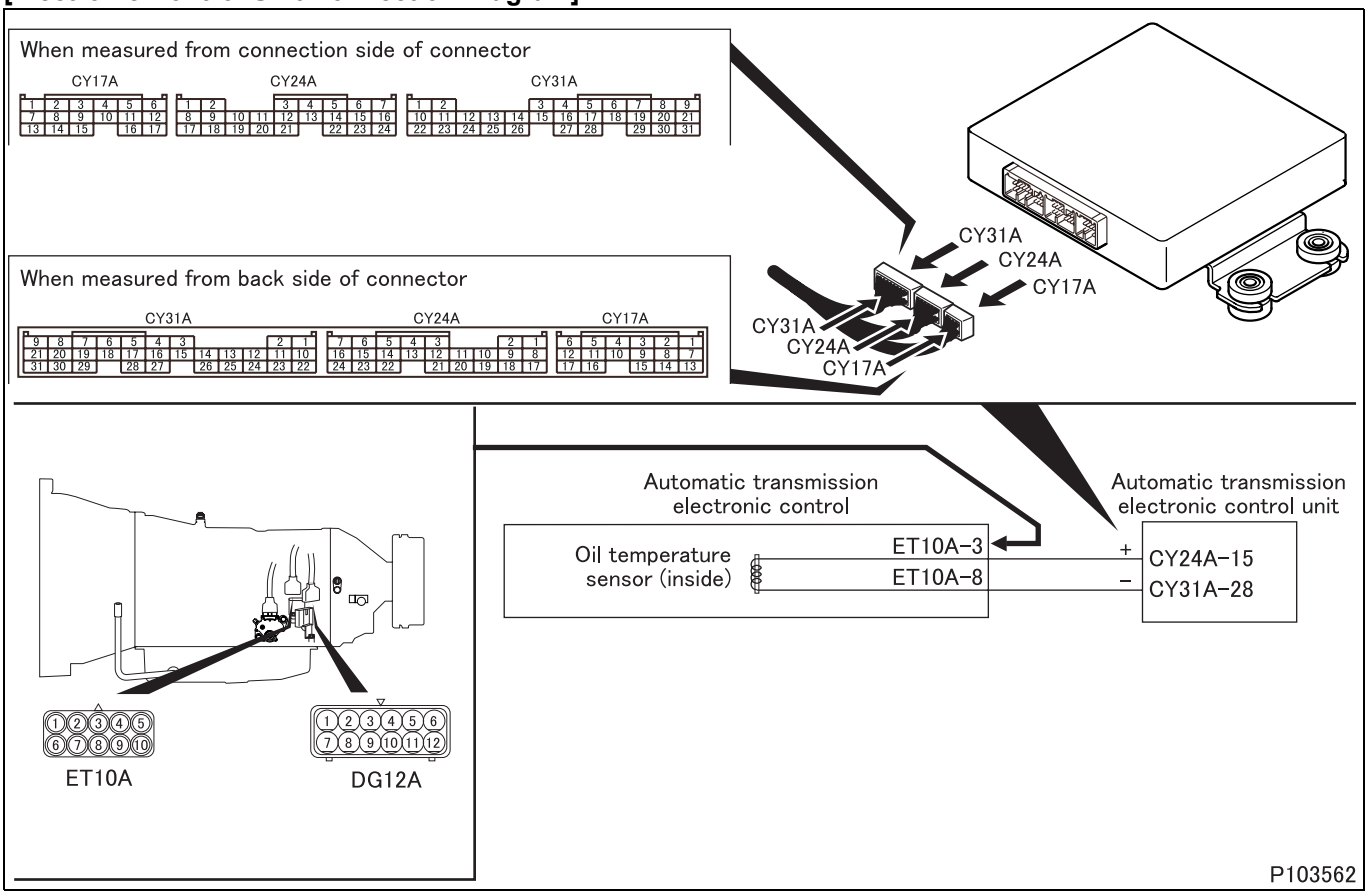

[Parts Identification and Location]

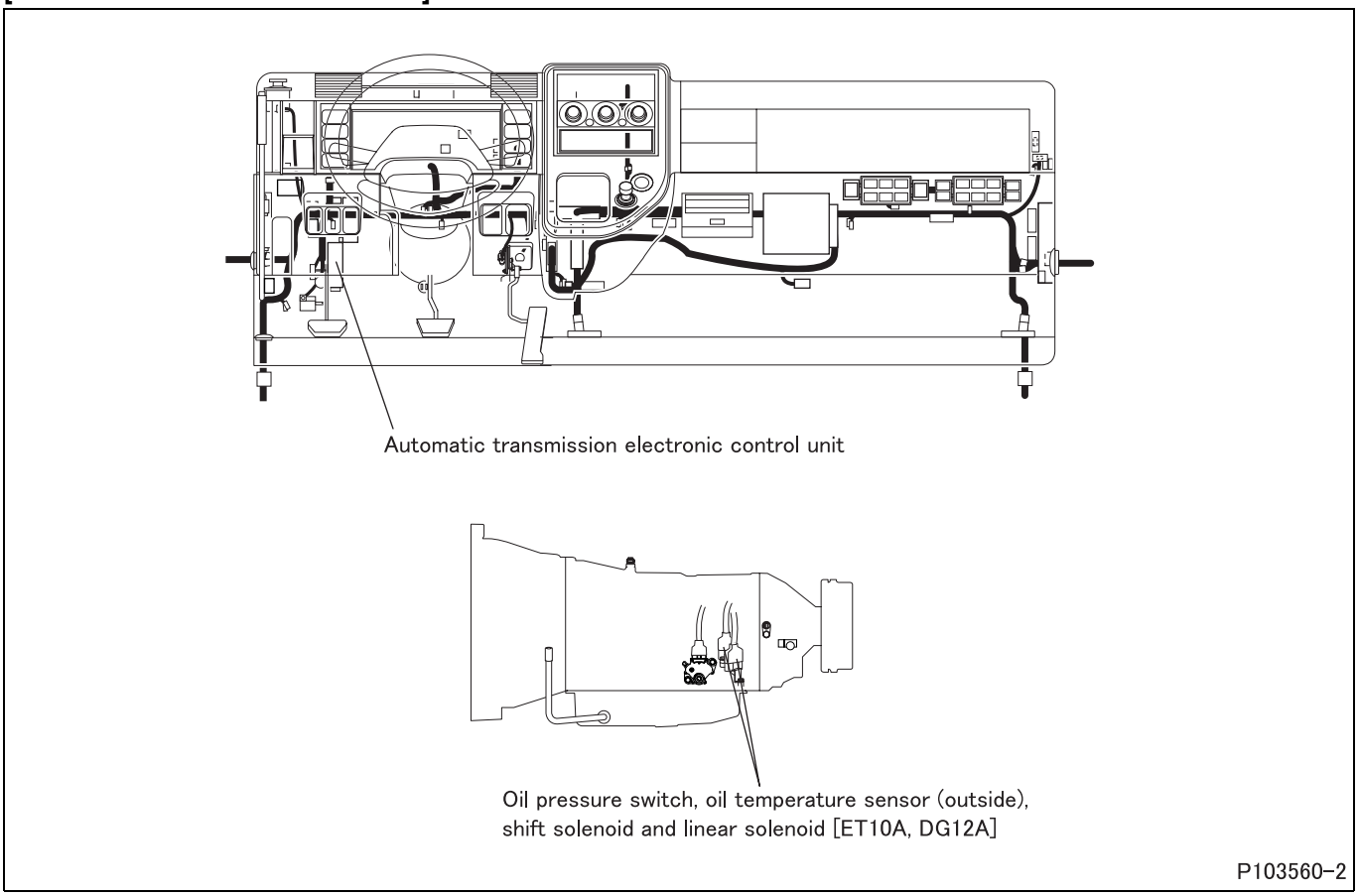

[Fault diagnosis]

- Perform checks in the sequence of the following steps.

Step 1	Inspection items		Inspection by control data
	Maintenance item		**<Multi-Use Tester not used>** Measure value of resistance between electronic control unit connector (CY24A) terminal No. 15 and connector (CY31A) terminal No. 28. **<Multi-Use Tester used>** Measure item No. 13 “A/T Oil Temp (OP)” of Service Data.
	Inspection condition		**<Multi-Use Tester not used>** Measure from back side of harness connector with electronic control unit connected to harness.
	Requirements		**<Multi-Use Tester not used>** Cold engine → during warm-up: Resistance is gradually reduced. **<Multi-Use Tester used>** • Cold engine: Proportionate to outside air temperature • During warm-up: Gradually increased.
	Inspection result (Is the judging standard satisfied?)	YES	Go to transient fault (See Gr00.).
		NO	Go to step 2.

Step 2	Inspection items		Inspection by electronic control unit connector (signal)
	Maintenance item		Measure value of resistance between connector (CY24A) terminal No. 15 and connector (CY31A) terminal No. 28.
	Inspection condition		• Disconnect electronic control unit and harness, and measure from connection side of harness connector. • Starter switch: OFF
	Requirements		• –30°C {–22°F}: 44 ± 6.6 kΩ • 10°C {50°F}: 6445 ± 645 Ω • 110°C {230°F}: 247 ± 16 Ω • 145°C {295°F}: 111 ± 6 Ω
	Inspection result (Is the judging standard satisfied?)	YES	Go to step 3.
		NO	Go to step 4.

Step 3	Inspection items		Inspection of electronic control unit connector
	Maintenance item		Inspection of connector
	Inspection condition		–
	Requirements		• Connector is properly connected. • No trace of water entry is found. • No corrosion is found in terminal. • Connection to terminal is appropriate.
	Inspection result (Is the judging standard satisfied?)	YES	Replacement of electronic control unit
		NO	Modify connector.

Step 4	Inspection items		Inspection of sensor connector
	Maintenance item		Inspection of connector
	Inspection condition		–
	Requirements		• Connector is properly connected. • No trace of water entry is found. • No corrosion is found in terminal. • Connection to terminal is appropriate.
	Inspection result (Is the judging standard satisfied?)	YES	Go to step 5.
		NO	Modify connector.

Step 5	Inspection items		Inspection of sensor unit
	Maintenance item		Measure value of resistance between connector (ET10A) terminal No. 3 and 8.
	Inspection condition		–
	Requirements		• –30°C {–22°F}: 44 ± 6.6 kΩ • 10°C {50°F}: 6445 ± 645 Ω • 110°C {230°F}: 247 ± 16 Ω • 145°C {295°F}: 111 ± 6 Ω
	Inspection result (Is the judging standard satisfied?)	YES	Go to step 6.
		NO	Replacement of automatic transmission

<Step 5 inspection diagram>

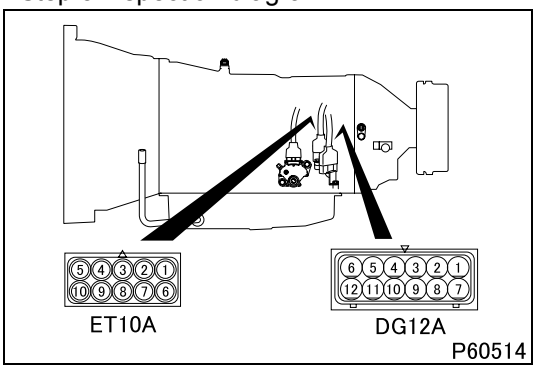

Step 6	Inspection items		Inspection of harness between sensor and electronic control unit (signal)
	Maintenance item		Check circuit between connector (ET10A) terminal No. 3 and electronic control unit connector (CY24A) terminal No. 15.
	Inspection condition		Disconnect each device from harness and measure from connection side of harness connector.
	Requirements		There is continuity.
	Inspection result (Is the judging standard satisfied?)	YES	Go to step 7.
		NO	Modify harness.

Step 7	Inspection items		Inspection of harness between sensor and electronic control unit (ground)
	Maintenance item		Check circuit between connector (ET10A) terminal No. 8 and electronic control unit connector (CY31A) terminal No. 28.
	Inspection condition		Disconnect each device from harness and measure from connection side of harness connector.
	Requirements		There is continuity.
	Inspection result (Is the judging standard satisfied?)	YES	Go to step 8.
		NO	Modify harness.

Step 8	Inspection items		Inspection by control data
	Maintenance item		**<Multi-Use Tester not used>** Measure value of resistance between electronic control unit connector (CY24A) terminal No. 15 and connector (CY31A) terminal No. 28. **<Multi-Use Tester used>** Measure item No. 13 “A/T Oil Temp (OP)” of Service Data.
	Inspection condition		**<Multi-Use Tester not used>** Measure from back side of harness connector with electronic control unit connected to harness.
	Requirements		**<Multi-Use Tester not used>** Cold engine → during warm-up: Resistance is gradually reduced. **<Multi-Use Tester used>** • Cold engine: Proportionate to outside air temperature • During warm-up: Gradually increased.
	Inspection result (Is the judging standard satisfied?)	YES	Go to transient fault (See Gr00.).
		NO	Replacement of electronic control unit

[Fault code]
Diagnosis code: P0712/Flash code: 13
[Monitor ID]
11
[Fault (outline)]
Failure of oil temperature sensor (inside)
[Diagnosis check]
- Automatic transmission fluid temperature is monitored by oil temperature sensor (inside).

[Code generation condition]
- Oil temperature sensor (inside) output temperature remains excessively high (over 180°C {355°F}) for 0.5 second.

[Diagnosis check timing]
- Fault diagnosis is continuously performed.

[Diagnostic requirement]
- Continuous

[Control effected by electronic control unit during fault]
- Control is effected on basis of low oil temperature (–30°C {–24°F}) immediately after starter switch is turned ON and normal oil temperature (80°C {175°F}) 5 minutes later.
- Braking force control is inhibited.

[Probable cause of trouble]
- Open-circuit or short-circuit of harness between electronic control unit and oil temperature sensor (inside)
- Malfunction of each connector
- Malfunction of oil temperature sensor (inside)
- Malfunction of electronic control unit

[Recoverability]
- Recovered if signal becomes normal with starter switch in ON position.

[Electronic Control Unit Connection Diagram]

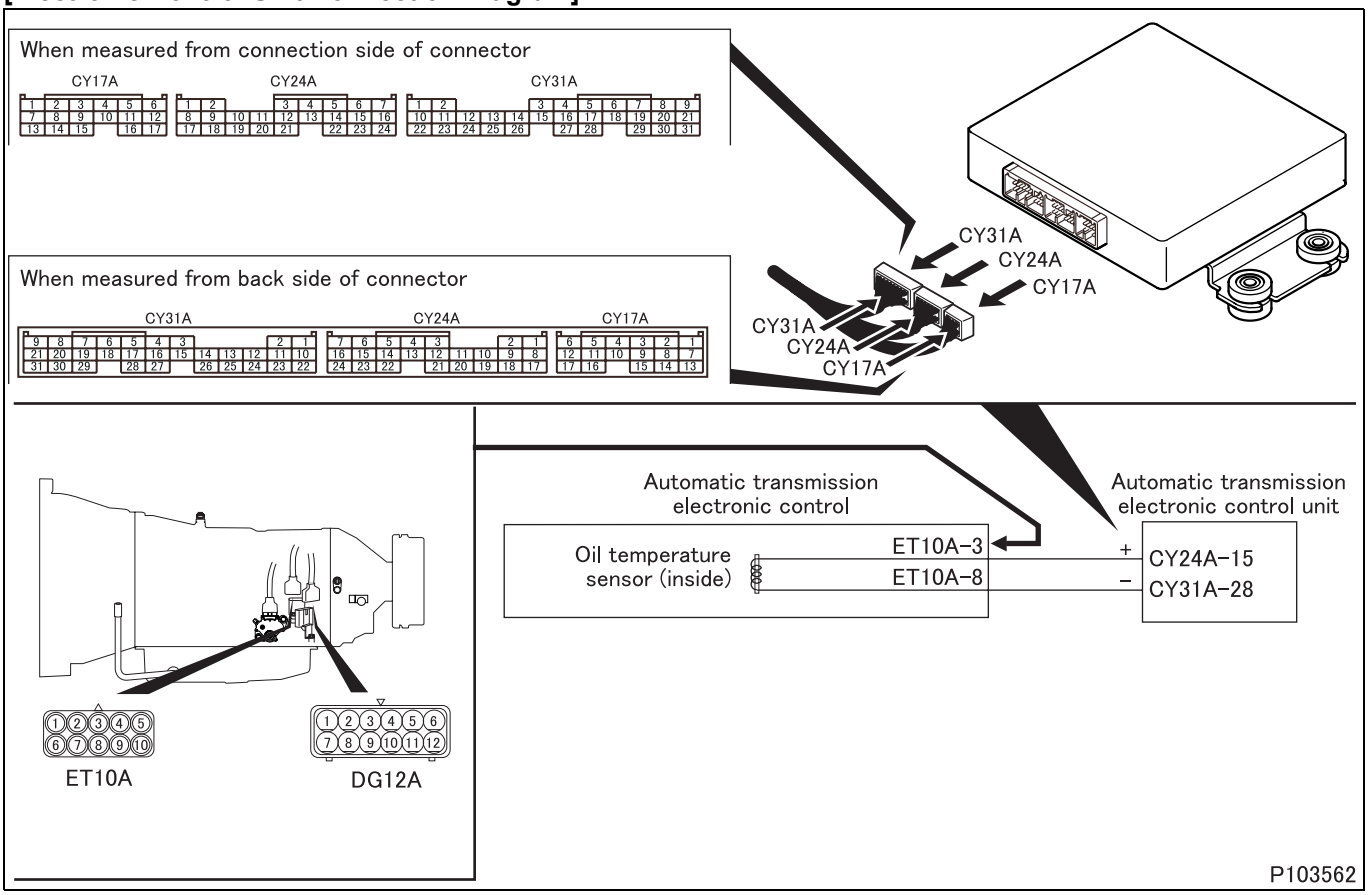

[Parts Identification and Location]

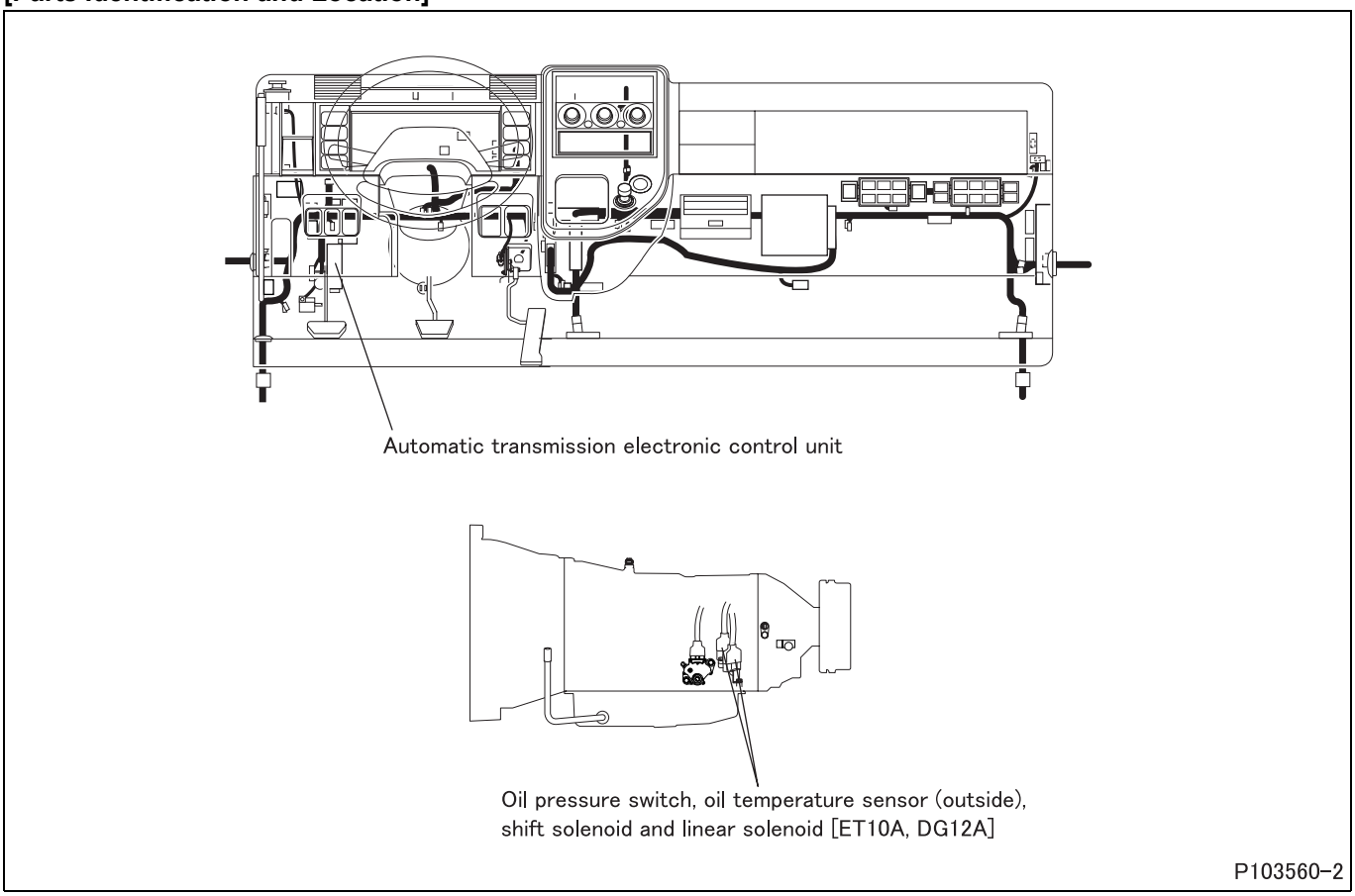

[Fault diagnosis]

- Perform checks in the sequence of the following steps.

Step 1	Inspection items		Inspection by control data
	Maintenance item		**<Multi-Use Tester not used>** Measure value of resistance between electronic control unit connector (CY24A) terminal No. 15 and connector (CY31A) terminal No. 28. **<Multi-Use Tester used>** Measure item No. 13 “A/T Oil Temp (OP)” of Service Data.
	Inspection condition		**<Multi-Use Tester not used>** Measure from back side of harness connector with electronic control unit connected to harness.
	Requirements		**<Multi-Use Tester not used>** Cold engine → during warm-up: Resistance is gradually reduced. **<Multi-Use Tester used>** • Cold engine: Proportionate to outside air temperature • During warm-up: Gradually increased.
	Inspection result (Is the judging standard satisfied?)	YES	Go to transient fault (See Gr00.).
		NO	Go to step 2.

Step 2	Inspection items		Inspection by electronic control unit connector (signal)
	Maintenance item		Measure value of resistance between connector (CY24A) terminal No. 15 and connector (CY31A) terminal No. 28.
	Inspection condition		• Disconnect electronic control unit and harness, and measure from connection side of harness connector. • Starter switch: OFF
	Requirements		• –30°C {–22°F}: 44 ± 6.6 kΩ • 10°C {50°F}: 6445 ± 645 Ω • 110°C {230°F}: 247 ± 16 Ω • 145°C {295°F}: 111 ± 6 Ω
	Inspection result (Is the judging standard satisfied?)	YES	Go to step 3.
		NO	Go to step 4.

Step 3	Inspection items		Inspection of electronic control unit connector
	Maintenance item		Inspection of connector
	Inspection condition		–
	Requirements		• Connector is properly connected. • No trace of water entry is found. • No corrosion is found in terminal. • Connection to terminal is appropriate.
	Inspection result (Is the judging standard satisfied?)	YES	Replacement of electronic control unit
		NO	Modify connector.

Step 4	Inspection items		Inspection of sensor connector
	Maintenance item		Inspection of connector
	Inspection condition		–
	Requirements		• Connector is properly connected. • No trace of water entry is found. • No corrosion is found in terminal. • Connection to terminal is appropriate.
	Inspection result (Is the judging standard satisfied?)	YES	Go to step 5.
		NO	Modify connector.

Step 5	Inspection items		Inspection of sensor unit
	Maintenance item		Measure value of resistance between connector (ET10A) terminal No. 3 and 8.
	Inspection condition		–
	Requirements		• –30°C {–22°F}: 44 ± 6.6 kΩ • 10°C {50°F}: 6445 ± 645 Ω • 110°C {230°F}: 247 ± 16 Ω • 145°C {295°F}: 111 ± 6 Ω
	Inspection result (Is the judging standard satisfied?)	YES	Go to step 6.
		NO	Replacement of automatic transmission

<Step 5 inspection diagram>

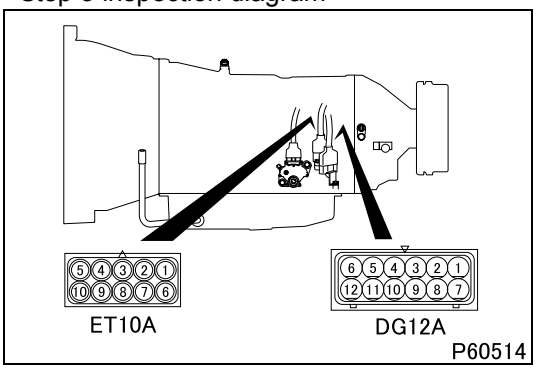

Step 6	Inspection items		Inspection of harness between sensor and electronic control unit (signal)
	Maintenance item		Check circuit between connector (ET10A) terminal No. 3 and electronic control unit connector (CY24A) terminal No. 15.
	Inspection condition		Disconnect each device from harness and measure from connection side of harness connector.
	Requirements		There is continuity.
	Inspection result (Is the judging standard satisfied?)	YES	Go to step 7.
		NO	Modify harness.

Step 7	Inspection items		Inspection of harness between sensor and electronic control unit (ground)
	Maintenance item		Check circuit between connector (ET10A) terminal No. 8 and electronic control unit connector (CY31A) terminal No. 28.
	Inspection condition		Disconnect each device from harness and measure from connection side of harness connector.
	Requirements		There is continuity.
	Inspection result (Is the judging standard satisfied?)	YES	Go to step 8.
		NO	Modify harness.

Step 8	Inspection items		Inspection by control data
	Maintenance item		**<Multi-Use Tester not used>** Measure value of resistance between electronic control unit connector (CY24A) terminal No. 15 and connector (CY31A) terminal No. 28. **<Multi-Use Tester used>** Measure item No. 13 “A/T Oil Temp (OP)” of Service Data.
	Inspection condition		**<Multi-Use Tester not used>** Measure from back side of harness connector with electronic control unit connected to harness.
	Requirements		**<Multi-Use Tester not used>** • Cold engine → during warm-up: Resistance is gradually reduced. **<Multi-Use Tester used>** • Cold engine: Proportionate to outside air temperature • During warm-up: Gradually increased.
	Inspection result (Is the judging standard satisfied?)	YES	Go to transient fault (See Gr00.).
		NO	Replacement of electronic control unit

[Fault code]
Diagnosis code: P0713/Flash code: 13
[Monitor ID]
12
[Fault (outline)]
Failure of oil temperature sensor (inside)
[Diagnosis check]
- Automatic transmission fluid temperature is monitored by oil temperature sensor (inside).

[Code generation condition]
- Oil temperature sensor (inside) output temperature remains excessively low (below –50°C {–56°F}) for 0.5 second.

[Diagnosis check timing]
- Fault diagnosis is continuously performed.

[Diagnostic requirement]
- Continuous

[Control effected by electronic control unit during fault]
- Control is effected on basis of low oil temperature (–30°C {–24°F}) immediately after starter switch is turned ON and normal oil temperature (80°C {175°F}) 5 minutes later.
- Braking force control is inhibited.

[Probable cause of trouble]
- Open-circuit or short-circuit of harness between electronic control unit and oil temperature sensor (inside)
- Malfunction of each connector
- Malfunction of oil temperature sensor (inside)
- Malfunction of electronic control unit

[Recoverability]
- Recovered if signal becomes normal with starter switch in ON position.

[Electronic Control Unit Connection Diagram]

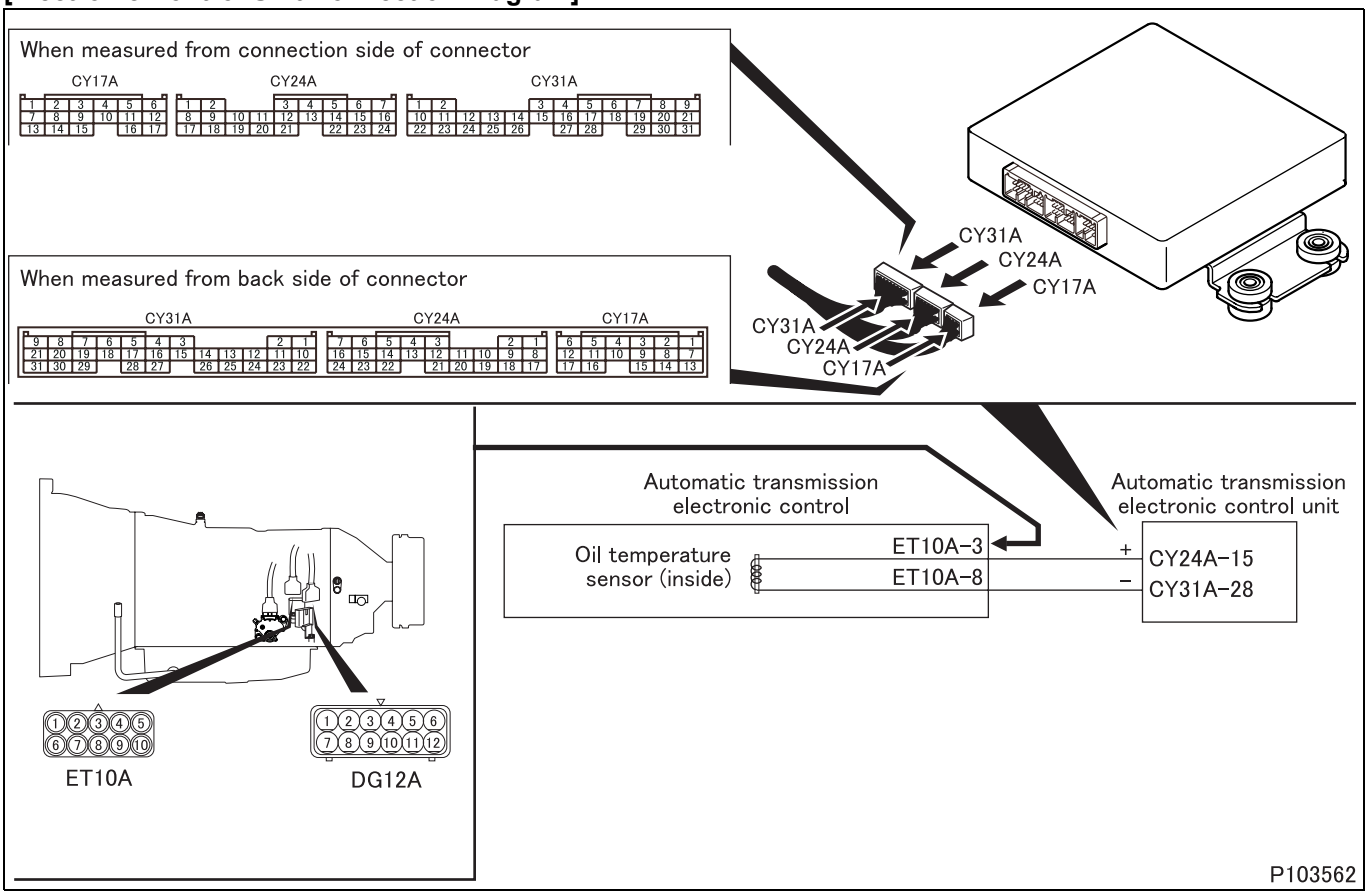

[Parts Identification and Location]

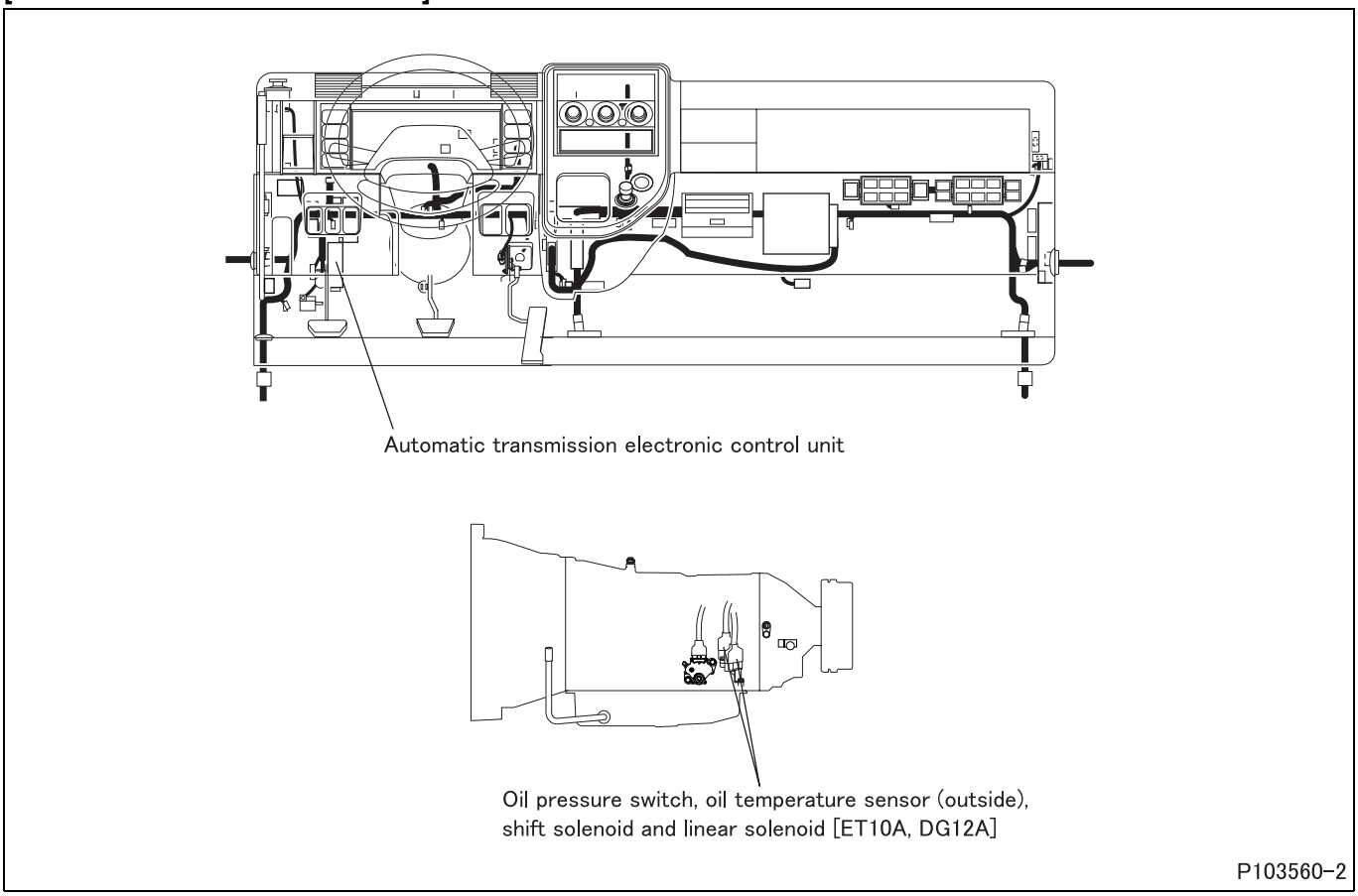

[Fault diagnosis]

- Perform checks in the sequence of the following steps.

Step 1	Inspection items		Inspection by control data
	Maintenance item		**<Multi-Use Tester not used>** Measure value of resistance between electronic control unit connector (CY24A) terminal No. 15 and connector (CY31A) terminal No. 28. **<Multi-Use Tester used>** Measure item No. 13 “A/T Oil Temp (OP)” of Service Data.
	Inspection condition		**<Multi-Use Tester not used>** Measure from back side of harness connector with electronic control unit connected to harness.
	Requirements		**<Multi-Use Tester not used>** Cold engine → during warm-up: Resistance is gradually reduced. **<Multi-Use Tester used>** • Cold engine: Proportionate to outside air temperature • During warm-up: Gradually increased.
	Inspection result (Is the judging standard satisfied?)	YES	Go to transient fault (See Gr00.).
		NO	Go to step 2.

Step 2	Inspection items		Inspection by electronic control unit connector (signal)
	Maintenance item		Measure value of resistance between connector (CY24A) terminal No. 15 and connector (CY31A) terminal No. 28.
	Inspection condition		• Disconnect electronic control unit and harness, and measure from connection side of harness connector. • Starter switch: OFF
	Requirements		• –30°C {–22°F}: 44 ± 6.6 kΩ • 10°C {50°F}: 6445 ± 645 Ω • 110°C {230°F}: 247 ± 16 Ω • 145°C {295°F}: 111 ± 6 Ω
	Inspection result (Is the judging standard satisfied?)	YES	Go to step 3.
		NO	Go to step 4.

Step 3	Inspection items		Inspection of electronic control unit connector
	Maintenance item		Inspection of connector
	Inspection condition		–
	Requirements		• Connector is properly connected. • No trace of water entry is found. • No corrosion is found in terminal. • Connection to terminal is appropriate.
	Inspection result (Is the judging standard satisfied?)	YES	Replacement of electronic control unit
		NO	Modify connector.

Step 4	Inspection items		Inspection of sensor connector
	Maintenance item		Inspection of connector
	Inspection condition		–
	Requirements		• Connector is properly connected. • No trace of water entry is found. • No corrosion is found in terminal. • Connection to terminal is appropriate.
	Inspection result (Is the judging standard satisfied?)	YES	Go to step 5.
		NO	Modify connector.

Step 5	Inspection items		Inspection of sensor unit
	Maintenance item		Measure value of resistance between connector (ET10A) terminal No. 3 and 8.
	Inspection condition		–
	Requirements		• –30°C {–22°F}: 44 ± 6.6 kΩ • 10°C {50°F}: 6445 ± 645 Ω • 110°C {230°F}: 247 ± 16 Ω • 145°C {295°F}: 111 ± 6 Ω
	Inspection result (Is the judging standard satisfied?)	YES	Go to step 6.
		NO	Replacement of automatic transmission

<Step 5 inspection diagram>

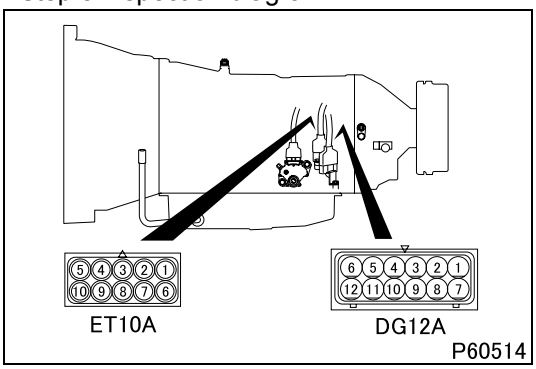

Step 6	Inspection items		Inspection of harness between sensor and electronic control unit (signal)
	Maintenance item		Check circuit between connector (ET10A) terminal No. 3 and electronic control unit connector (CY24A) terminal No. 15.
	Inspection condition		Disconnect each device from harness and measure from connection side of harness connector.
	Requirements		There is continuity.
	Inspection result (Is the judging standard satisfied?)	YES	Go to step 7.
		NO	Modify harness.

Step 7	Inspection items		Inspection of harness between sensor and electronic control unit (ground)
	Maintenance item		Check circuit between connector (ET10A) terminal No. 8 and electronic control unit connector (CY31A) terminal No. 28.
	Inspection condition		Disconnect each device from harness and measure from connection side of harness connector.
	Requirements		There is continuity.
	Inspection result (Is the judging standard satisfied?)	YES	Go to step 8.
		NO	Modify harness.

Step 8	Inspection items		Inspection by control data
	Maintenance item		**<Multi-Use Tester not used>** Measure value of resistance between electronic control unit connector (CY24A) terminal No. 15 and connector (CY31A) terminal No. 28. **<Multi-Use Tester used>** Measure item No. 13 “A/T Oil Temp (OP)” of Service Data.
	Inspection condition		**<Multi-Use Tester not used>** Measure from back side of harness connector with electronic control unit connected to harness.
	Requirements		**<Multi-Use Tester not used>** Cold engine → during warm-up: Resistance is gradually reduced. **<Multi-Use Tester used>** • Cold engine: Proportionate to outside air temperature • During warm-up: Gradually increased.
	Inspection result (Is the judging standard satisfied?)	YES	Go to transient fault (See Gr00.).
		NO	Replacement of electronic control unit

[Fault code]
Diagnosis code: P0714/Flash code: 13
[Monitor ID]
15
[Fault (outline)]
Failure of oil temperature sensor (inside)
[Diagnosis check]
- Automatic transmission fluid temperature is monitored by oil temperature sensor (inside).

[Code generation condition]
- Oil temperature sensor (inside) signal remains intermittent for 7 seconds.

[Diagnosis check timing]
- Fault diagnosis is continuously performed.

[Diagnostic requirement]
- Starter switch ON battery voltage: 10 V to 16 V

[Control effected by electronic control unit during fault]
- Control is effected on basis of low oil temperature (–30°C {–24°F}) immediately after starter switch is turned ON and normal oil temperature (80°C {175°F}) 5 minutes later.
- Braking force control is inhibited.

[Probable cause of trouble]
- Open-circuit or short-circuit of harness between electronic control unit and oil temperature sensor (inside)
- Malfunction of each connector
- Malfunction of oil temperature sensor (inside)
- Malfunction of electronic control unit

[Recoverability]
- Recovered if signal becomes normal with starter switch in ON position.

[Electronic Control Unit Connection Diagram]

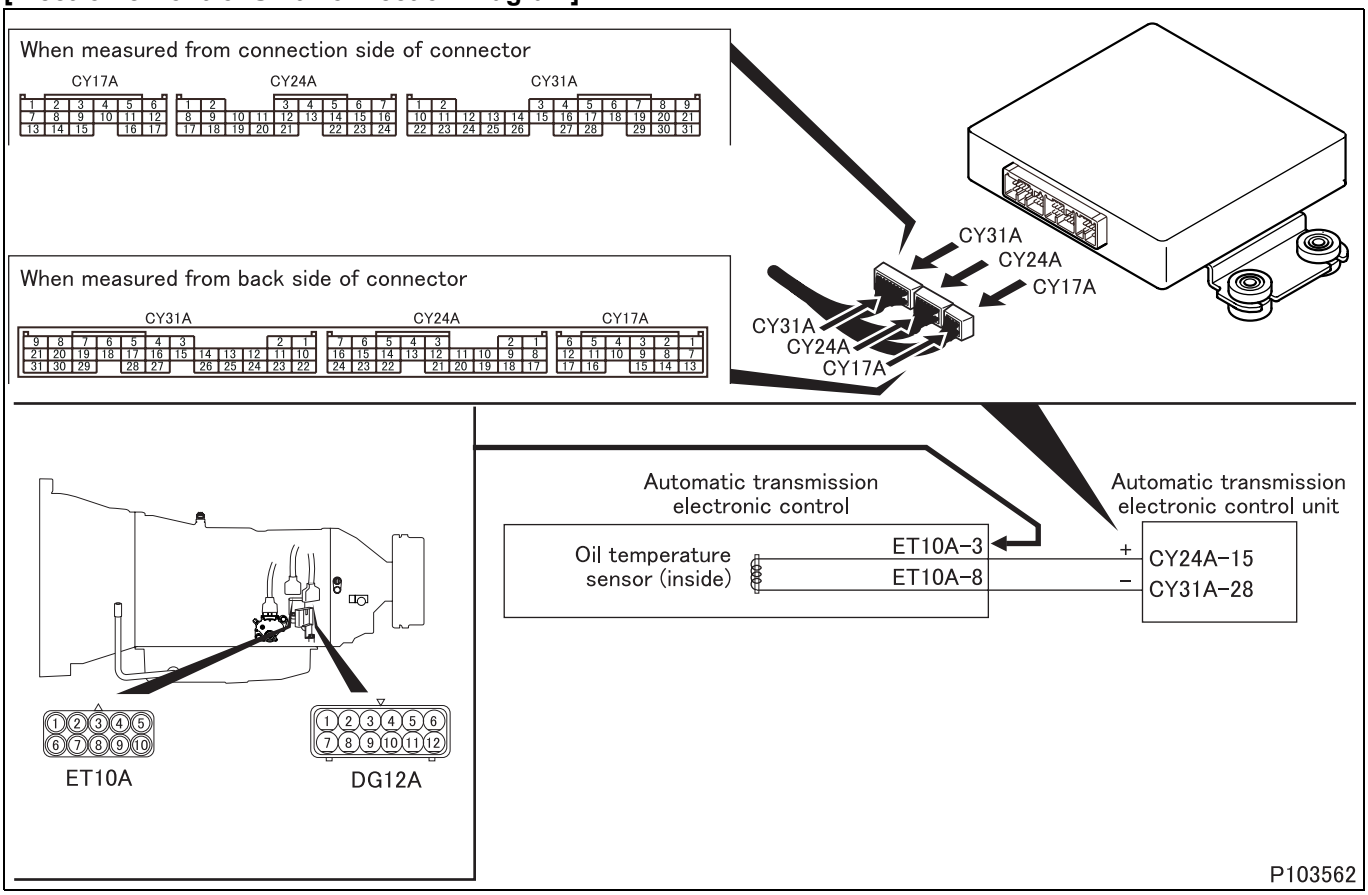

[Parts Identification and Location]

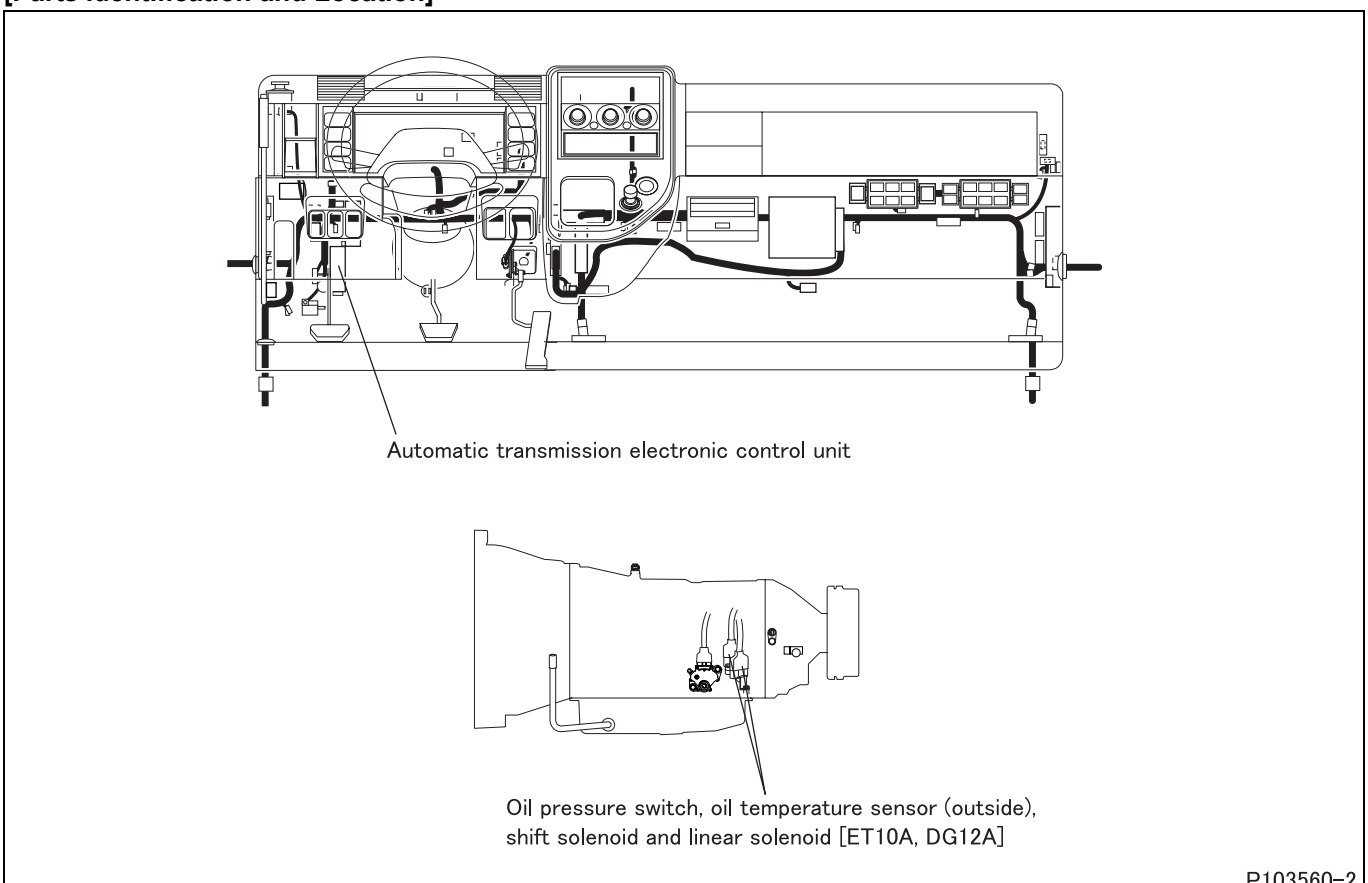

[Fault diagnosis]

- Perform checks in the sequence of the following steps.

Step 1	Inspection items		Inspection by control data
	Maintenance item		**<Multi-Use Tester not used>** Measure value of resistance between electronic control unit connector (CY24A) terminal No. 15 and connector (CY31A) terminal No. 28. **<Multi-Use Tester used>** Measure item No. 13 “A/T Oil Temp (OP)” of Service Data.
	Inspection condition		**<Multi-Use Tester not used>** Measure from back side of harness connector with electronic control unit connected to harness.
	Requirements		**<Multi-Use Tester not used>** • Cold engine → during warm-up: Resistance is gradually reduced. **<Multi-Use Tester used>** • Cold engine: Proportionate to outside air temperature • During warm-up: Gradually increased.
	Inspection result (Is the judging standard satisfied?)	YES	Go to transient fault (See Gr00.).
		NO	Go to step 2.

Step 2	Inspection items		Inspection by electronic control unit connector (signal)
	Maintenance item		Measure value of resistance between connector (CY24A) terminal No. 15 and connector (CY31A) terminal No. 28.
	Inspection condition		• Disconnect electronic control unit and harness, and measure from connection side of harness connector. • Starter switch: OFF
	Requirements		• –30°C {–22°F}: 44 ± 6.6 kΩ • 10°C {50°F}: 6445 ± 645 Ω • 110°C {230°F}: 247 ± 16 Ω • 145°C {295°F}: 111 ± 6 Ω
	Inspection result (Is the judging standard satisfied?)	YES	Go to step 3.
		NO	Go to step 4.

Step 3	Inspection items		Inspection of electronic control unit connector
	Maintenance item		Inspection of connector
	Inspection condition		–
	Requirements		• Connector is properly connected. • No trace of water entry is found. • No corrosion is found in terminal. • Connection to terminal is appropriate.
	Inspection result (Is the judging standard satisfied?)	YES	Replacement of electronic control unit
		NO	Modify connector.

Step 4	Inspection items		Inspection of sensor connector
	Maintenance item		Inspection of connector
	Inspection condition		–
	Requirements		• Connector is properly connected. • No trace of water entry is found. • No corrosion is found in terminal. • Connection to terminal is appropriate.
	Inspection result (Is the judging standard satisfied?)	YES	Go to step 5.
		NO	Modify connector.

Step 5	Inspection items		Inspection of sensor unit
	Maintenance item		Measure value of resistance between connector (ET10A) terminal No. 3 and 8.
	Inspection condition		–
	Requirements		• –30°C {–22°F}: 44 ± 6.6 kΩ • 10°C {50°F}: 6445 ± 645 Ω • 110°C {230°F}: 247 ± 16 Ω • 145°C {295°F}: 111 ± 6 Ω
	Inspection result (Is the judging standard satisfied?)	YES	Go to step 6.
		NO	Replacement of automatic transmission

<Step 5 inspection diagram>

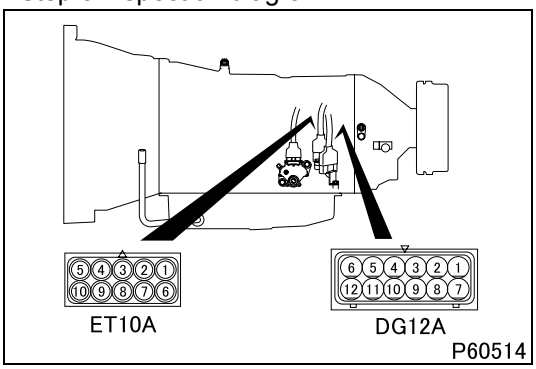

Step 6	Inspection items		Inspection of harness between sensor and electronic control unit (signal)
	Maintenance item		Check circuit between connector (ET10A) terminal No. 3 and electronic control unit connector (CY24A) terminal No. 15.
	Inspection condition		Disconnect each device from harness and measure from connection side of harness connector.
	Requirements		There is continuity.
	Inspection result (Is the judging standard satisfied?)	YES	Go to step 7.
		NO	Modify harness.

Step 7	Inspection items		Inspection of harness between sensor and electronic control unit (ground)
	Maintenance item		Check circuit between connector (ET10A) terminal No. 8 and electronic control unit connector (CY31A) terminal No. 28.
	Inspection condition		Disconnect each device from harness and measure from connection side of harness connector.
	Requirements		There is continuity.
	Inspection result (Is the judging standard satisfied?)	YES	Go to step 8.
		NO	Modify harness.

Step 8	Inspection items		Inspection by control data
	Maintenance item		**<Multi-Use Tester not used>** Measure value of resistance between electronic control unit connector (CY24A) terminal No. 15 and connector (CY31A) terminal No. 28. **<Multi-Use Tester used>** Measure item No. 13 “A/T Oil Temp (OP)” of Service Data.
	Inspection condition		**<Multi-Use Tester not used>** Measure from back side of harness connector with electronic control unit connected to harness.
	Requirements		**<Multi-Use Tester not used>** Cold engine → during warm-up: Resistance is gradually reduced. **<Multi-Use Tester used>** • Cold engine: Proportionate to outside air temperature • During warm-up: Gradually increased.
	Inspection result (Is the judging standard satisfied?)	YES	Go to transient fault (See Gr00.).
		NO	Replacement of electronic control unit

[Fault code]
Diagnosis code: P0717/Flash code: 16
[Monitor ID]
5
[Fault (outline)]
Failure of turbine speed sensor
[Diagnosis check]
- Turbine speed sensor is monitored for fault when vehicle is running without gear shifted.

[Code generation condition]
- Input signal from turbine speed sensor is missing when output speed sensor output is normal.

[Diagnosis check timing]
- Fault diagnosis is performed once at the minimum during the driving cycle.

[Diagnostic requirement]
- Vehicle speed: above 5 km/h {3 mph} (not less than 4 sec.)
- Shift position: except P or N range
- Engine revolution: 300 rpm or higher
- Control at the time of gear shifting is not effected.

[Control effected by electronic control unit during fault]
- Oil pressure control by linear solenoids 1, 2 and 3 is switched from vehicle speed feedback to controlling in accordance with elapsed time from speed change.
- Braking force control is inhibited.

[Probable cause of trouble]
- Open-circuit or short-circuit of harness between electronic control unit and turbine speed sensor
- Malfunction of each connector
- Malfunction of turbine speed sensor
- Malfunction of electronic control unit

[Recoverability]
- Recovered if signal becomes normal with starter switch in ON position.

[Electronic Control Unit Connection Diagram]

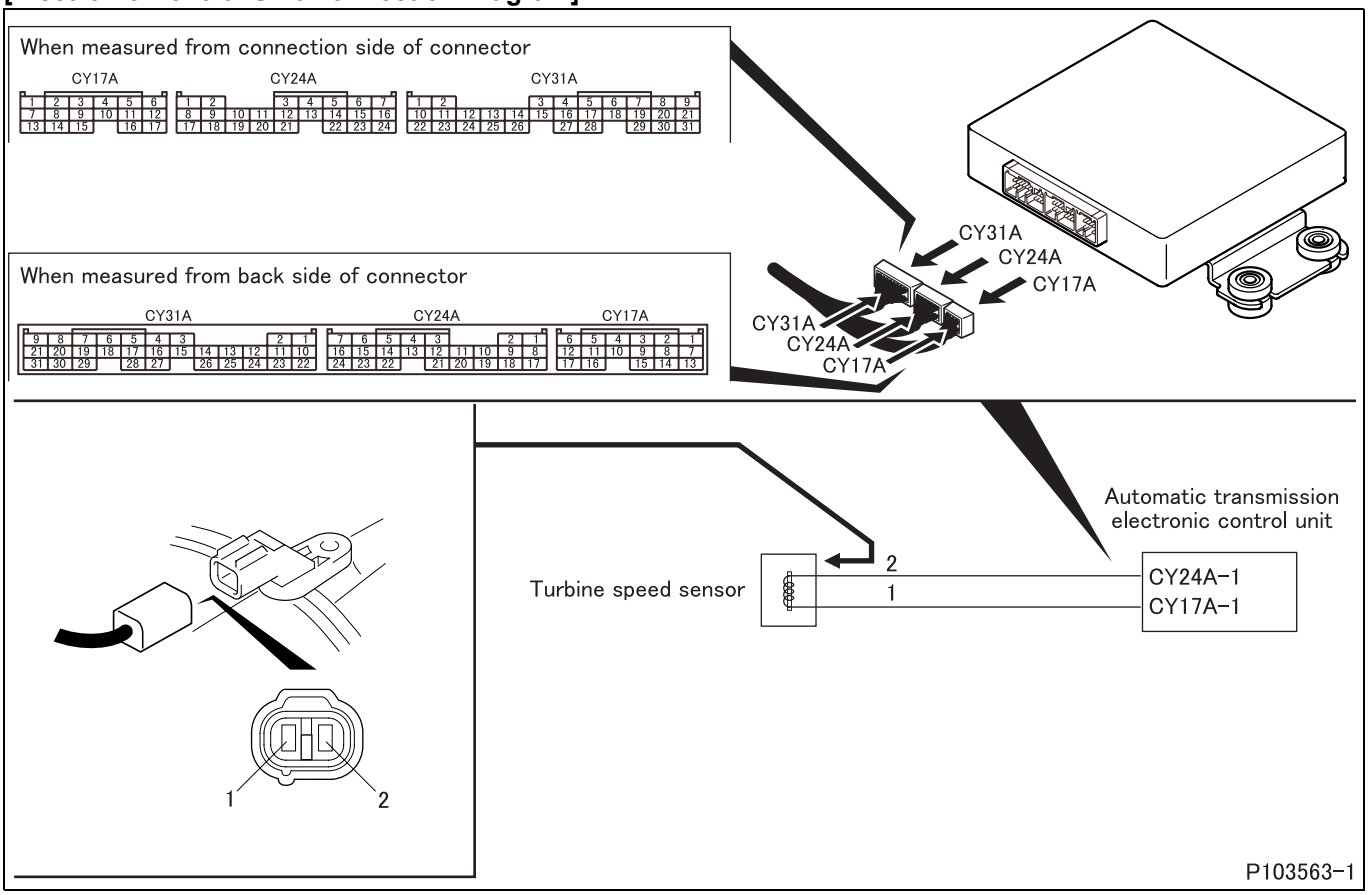

[Parts Identification and Location]

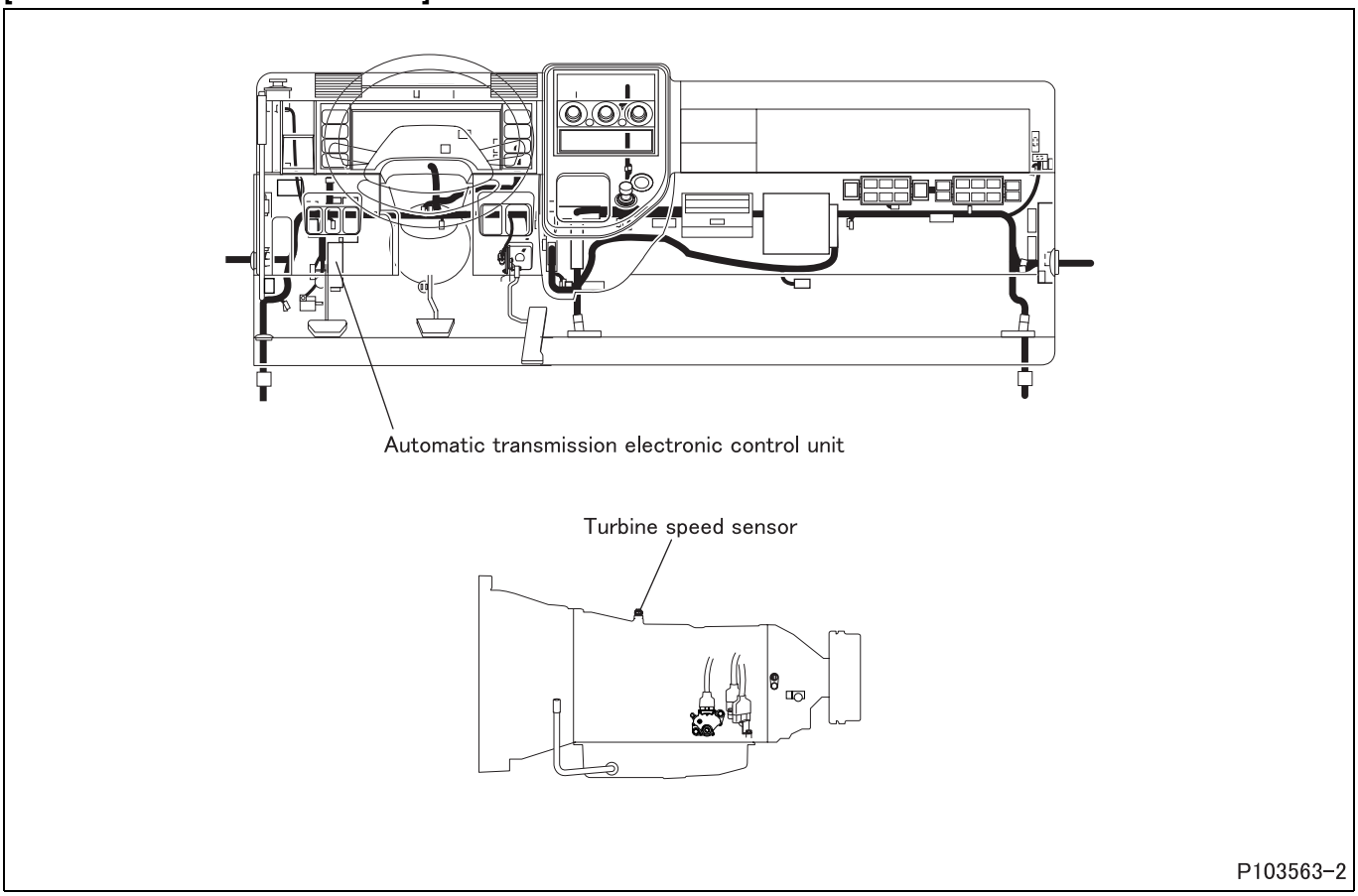

[Fault diagnosis]

- Perform checks in the sequence of the following steps.

Step 1	Inspection items		Inspection by control data
	Maintenance item		**<Multi-Use Tester not used>** Go to step 2. **<Multi-Use Tester used>** Measure item No. 16 “Turbine Speed” of Service Data.
	Inspection condition		–
	Requirements		• Vehicle standing with range selector in D position: 0 rpm • Vehicle running from above state: Gradually increased.
	Inspection result (Is the judging standard satisfied?)	YES	Go to transient fault (See Gr00.).
		NO	Go to step 2.

Step 2	Inspection items		Inspection of electronic control unit connector
	Maintenance item		Inspection of connector
	Inspection condition		–
	Requirements		• Connector is properly connected. • No trace of water entry is found. • No corrosion is found in terminal. • Connection to terminal is appropriate.
	Inspection result (Is the judging standard satisfied?)	YES	Go to step 3.
		NO	Modify connector.

Step 3	Inspection items		Inspection of sensor connector
	Maintenance item		Inspection of connector
	Inspection condition		–
	Requirements		• Connector is properly connected. • No trace of water entry is found. • No corrosion is found in terminal. • Connection to terminal is appropriate.
	Inspection result (Is the judging standard satisfied?)	YES	Go to step 4.
		NO	Modify connector.

Step 4	Inspection items		Inspection of sensor unit
	Maintenance item		Measure current between terminals.
	Inspection condition		• Wire sensor as illustrated. • Move magnetic piece at sensor tip in illustrated direction. (Distance between sensor and magnetic piece: Within 5 mm [0.20 in.])
	Requirements		• Hi: 12 to 16 mA • Low: 4 to 8 mA
	Inspection result (Is the judging standard satisfied?)	YES	Go to step 5.
		NO	Replacement of sensor

<Step 4 inspection diagram>

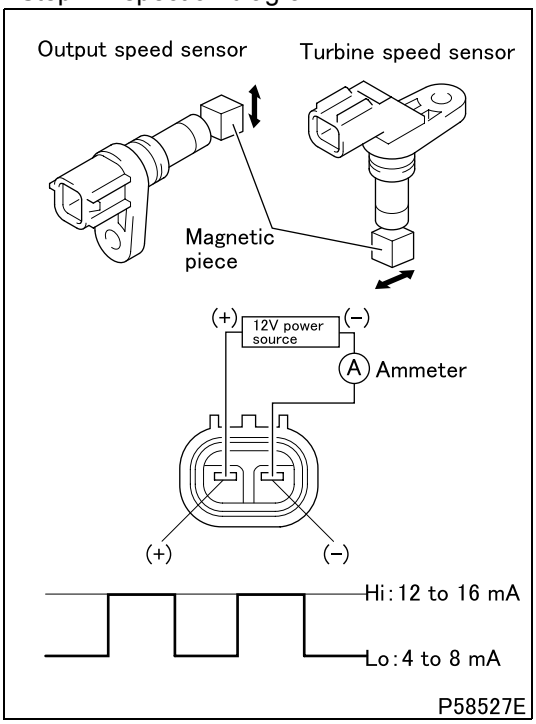

Step 5	Inspection items		Inspection of harness between sensor and electronic control unit (signal)
	Maintenance item		Check circuit between sensor connector terminal No. 2 and electronic control unit connector (CY24A) terminal No. 1.
	Inspection condition		Disconnect each device from harness and measure from connection side of harness connector.
	Requirements		There is continuity.
	Inspection result (Is the judging standard satisfied?)	YES	Go to step 6.
		NO	Replacement of harness

Step 6	Inspection items		Inspection of harness between sensor and electronic control unit (ground)
	Maintenance item		Check circuit between sensor connector terminal No. 1 and electronic control unit connector (CY17A) terminal No. 1.
	Inspection condition		Disconnect each device from harness and measure from connection side of harness connector.
	Requirements		There is continuity.
	Inspection result (Is the judging standard satisfied?)	YES	Go to step 7.
		NO	Replacement of harness

Step 7	Inspection items		Inspection by control data
	Maintenance item		**<Multi-Use Tester not used>** Check for recurrence of the same diagnosis code. **<Multi-Use Tester used>** Measure item No. 16 “Turbine Speed” of Service Data.
	Inspection condition		**–**
	Requirements		**<Multi-Use Tester not used>** • If the same diagnosis code occurs, replace electronic control unit. **<Multi-Use Tester used>** • Vehicle standing with range selector in D position: 0 rpm • Vehicle running from above state: Gradually increased.
	Inspection result (Is the judging standard satisfied?)	YES	Go to transient fault (See Gr00.).
		NO	Replacement of electronic control unit

[Fault code]
Diagnosis code: P0721/Flash code: 25
[Monitor ID]
4
[Fault (outline)]
Failure of output speed sensor
[Diagnosis check]
- Output speed sensor is monitored for fault with vehicle in running condition.

[Code generation condition]
Vehicle speed sensor is judged faulty in either of the following cases.
- Electronic control unit determines vehicle stop after sudden input of deceleration signal from output speed sensor. (Lamp indication: IMB) <A>
- Abnormality established by comparison with turbine speed sensor and vehicle speed sensor and of output gear ratio has continued for 4 seconds. (Lamp indication: 2DC) <B>

[Diagnosis check timing]
- Fault diagnosis is performed once at the minimum during the driving cycle.

[Diagnostic requirement]
- Vehicle speed sensor related diagnosis code (P0500, P0501) does not occur.
- Output speed sensor related diagnosis code (P0722) does not occur.
- Turbine speed sensor related diagnosis code does not occur.
- Engine speed sensor related diagnosis code does not occur.
- Inhibitor switch related diagnosis code does not occur.
- Control with the fixed speed gear signals outputted under fault conditions is not effected.
- Shift position: except P or N range
- Control at the time of gear shifting is not effected.

[Control effected by electronic control unit during fault]
- The gear last selected is active on a steady basis.

[Probable cause of trouble]
- Open-circuit or short-circuit of harness between electronic control unit and output speed sensor
- Malfunction of each connector
- Malfunction of output speed sensor
- Malfunction of electronic control unit

[Recoverability]
- Recovered if signal becomes normal with starter switch in ON position.

[Electronic Control Unit Connection Diagram]

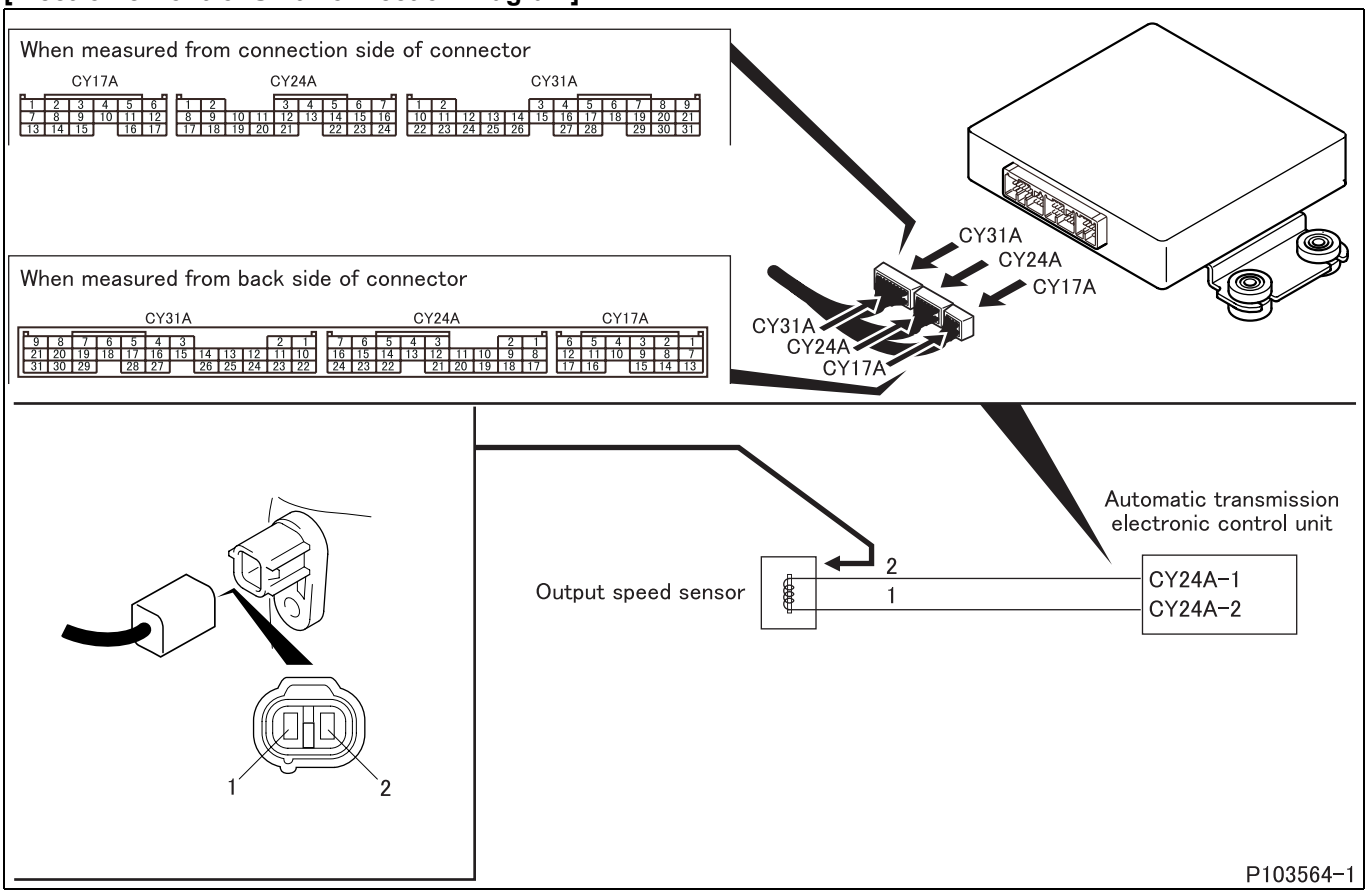

[Parts Identification and Location]

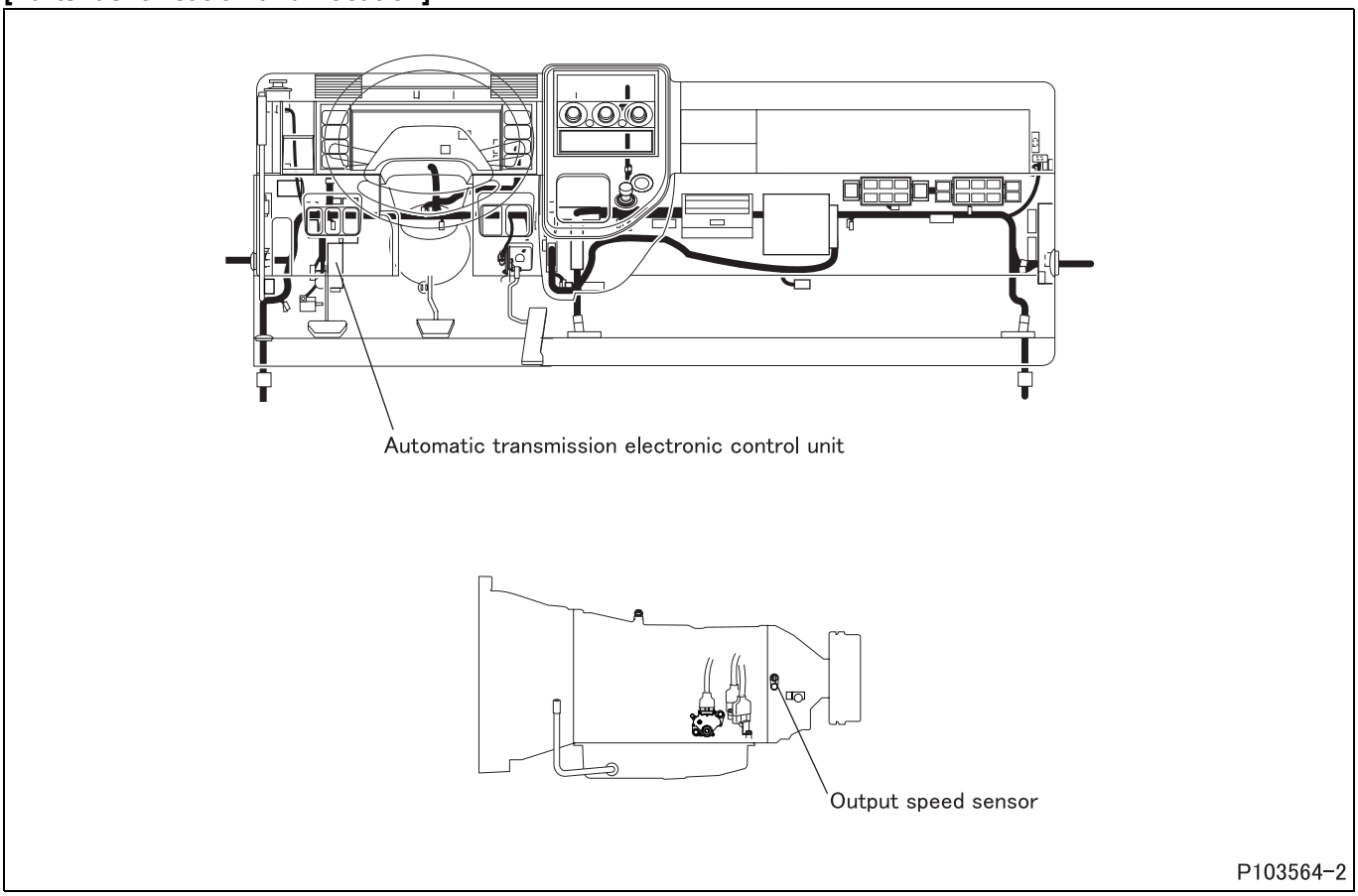

[Fault diagnosis]

- Perform checks in the sequence of the following steps.

Step 1	Inspection items		Inspection by control data
	Maintenance item		**<Multi-Use Tester not used>** Go to step 2. **<Multi-Use Tester used>** Measure item No. 25 “VEH Speed 2” of Service Data.
	Inspection condition		–
	Requirements		During vehicle run: Synchronous with speedometer.
	Inspection result (Is the judging standard satisfied?)	YES	Go to transient fault (See Gr00.).
		NO	Go to step 2.

Step 2	Inspection items		Inspection of electronic control unit connector
	Maintenance item		Inspection of connector
	Inspection condition		–
	Requirements		• Connector is properly connected. • No trace of water entry is found. • No corrosion is found in terminal. • Connection to terminal is appropriate.
	Inspection result (Is the judging standard satisfied?)	YES	Go to step 3.
		NO	Modify connector.

Step 3	Inspection items		Inspection of sensor connector
	Maintenance item		Inspection of connector
	Inspection condition		–
	Requirements		• Connector is properly connected. • No trace of water entry is found. • No corrosion is found in terminal. • Connection to terminal is appropriate.
	Inspection result (Is the judging standard satisfied?)	YES	Go to step 4.
		NO	Modify connector.

Step 4	Inspection items		Inspection of sensor unit
	Maintenance item		Measure current between terminals.
	Inspection condition		• Wire sensor as illustrated. • Move magnetic piece at sensor tip in illustrated direction. (Distance between sensor and magnetic piece: Within 5 mm [0.20 in.])
	Requirements		• Hi: 12 to 16 mA • Low: 4 to 8 mA
	Inspection result (Is the judging standard satisfied?)	YES	Go to step 5.
		NO	Replacement of sensor

<Step 4 inspection diagram>

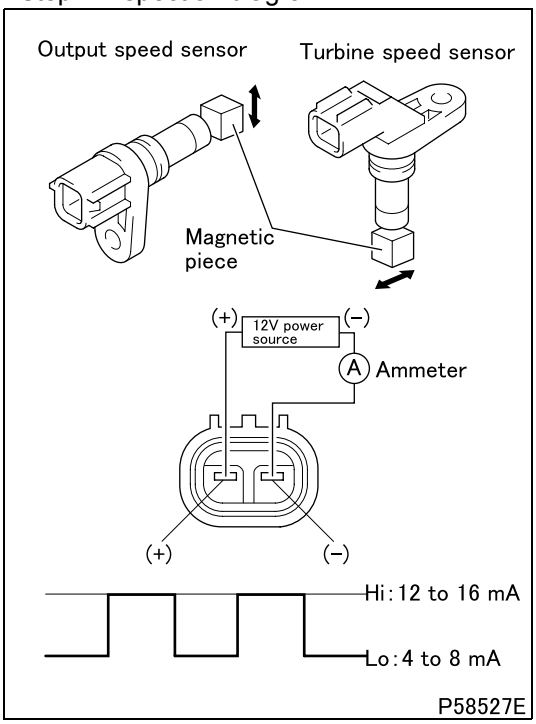

Step 5	Inspection items		Inspection of harness between sensor and electronic control unit (signal)
	Maintenance item		Check circuit between sensor connector terminal No. 2 and electronic control unit connector (CY24A) terminal No. 1.
	Inspection condition		Disconnect each device from harness and measure from connection side of harness connector.
	Requirements		There is continuity.
	Inspection result (Is the judging standard satisfied?)	YES	Go to step 6.
		NO	Replacement of harness

Step 6	Inspection items		Inspection of harness between sensor and electronic control unit (ground)
	Maintenance item		Check circuit between sensor connector terminal No. 1 and electronic control unit connector (CY24A) terminal No. 2.
	Inspection condition		Disconnect each device from harness and measure from connection side of harness connector.
	Requirements		There is continuity.
	Inspection result (Is the judging standard satisfied?)	YES	Go to step 7.
		NO	Replacement of harness

Step 7	Inspection items		Inspection by control data
	Maintenance item		**<Multi-Use Tester not used>** Check for recurrence of the same diagnosis code. **<Multi-Use Tester used>** Measure item No. 25 “VEH Speed 2” of Service Data.
	Inspection condition		**–**
	Requirements		**<Multi-Use Tester not used>** If the same diagnosis code occurs, replace electronic control unit. **<Multi-Use Tester used>** During vehicle run: Synchronous with speedometer.
	Inspection result (Is the judging standard satisfied?)	YES	Go to transient fault (See Gr00.).
		NO	Replacement of electronic control unit

[Fault code]
Diagnosis code: P0722/Flash code: 25
[Monitor ID]
3
[Fault (outline)]
Failure of output speed sensor
[Diagnosis check]
- Output speed sensor is monitored for fault during vehicle run (after at least 4 seconds of running at 5 km/h or more)

[Code generation condition]
- Input signal from output speed sensor is missing when vehicle speed sensor output is normal.

[Diagnosis check timing]
- Fault diagnosis is performed once at the minimum during the driving cycle.

[Diagnostic requirement]
- Vehicle speed: above 5 km/h {3 mph} (not less than 4 sec.)
- Shift position: except P or N range
- Vehicle speed sensor related diagnosis code (P0500, P0501) does not occur.

[Control effected by electronic control unit during fault]
- Control is effected using vehicle speed sensor.
- Oil pressure control by linear solenoids 1, 2 and 3 is switched from vehicle speed feedback to controlling in accordance with elapsed time from speed change.
- Braking force control is inhibited.

[Probable cause of trouble]
- Open-circuit or short-circuit of harness between electronic control unit and output speed sensor
- Malfunction of each connector
- Malfunction of output speed sensor
- Malfunction of electronic control unit

[Recoverability]
- Recovered if signal becomes normal with starter switch in ON position.

[Electronic Control Unit Connection Diagram]

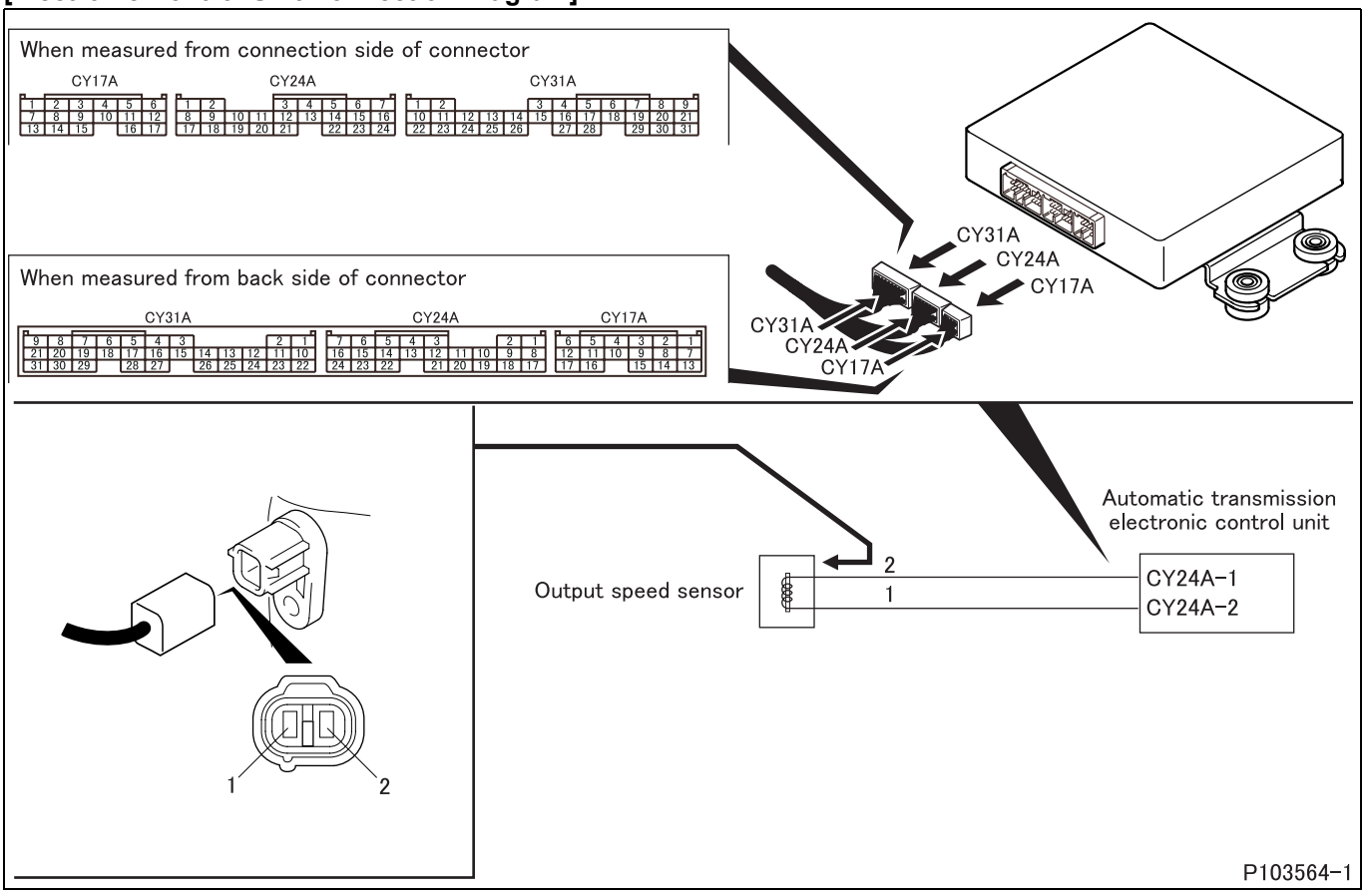

[Parts Identification and Location]

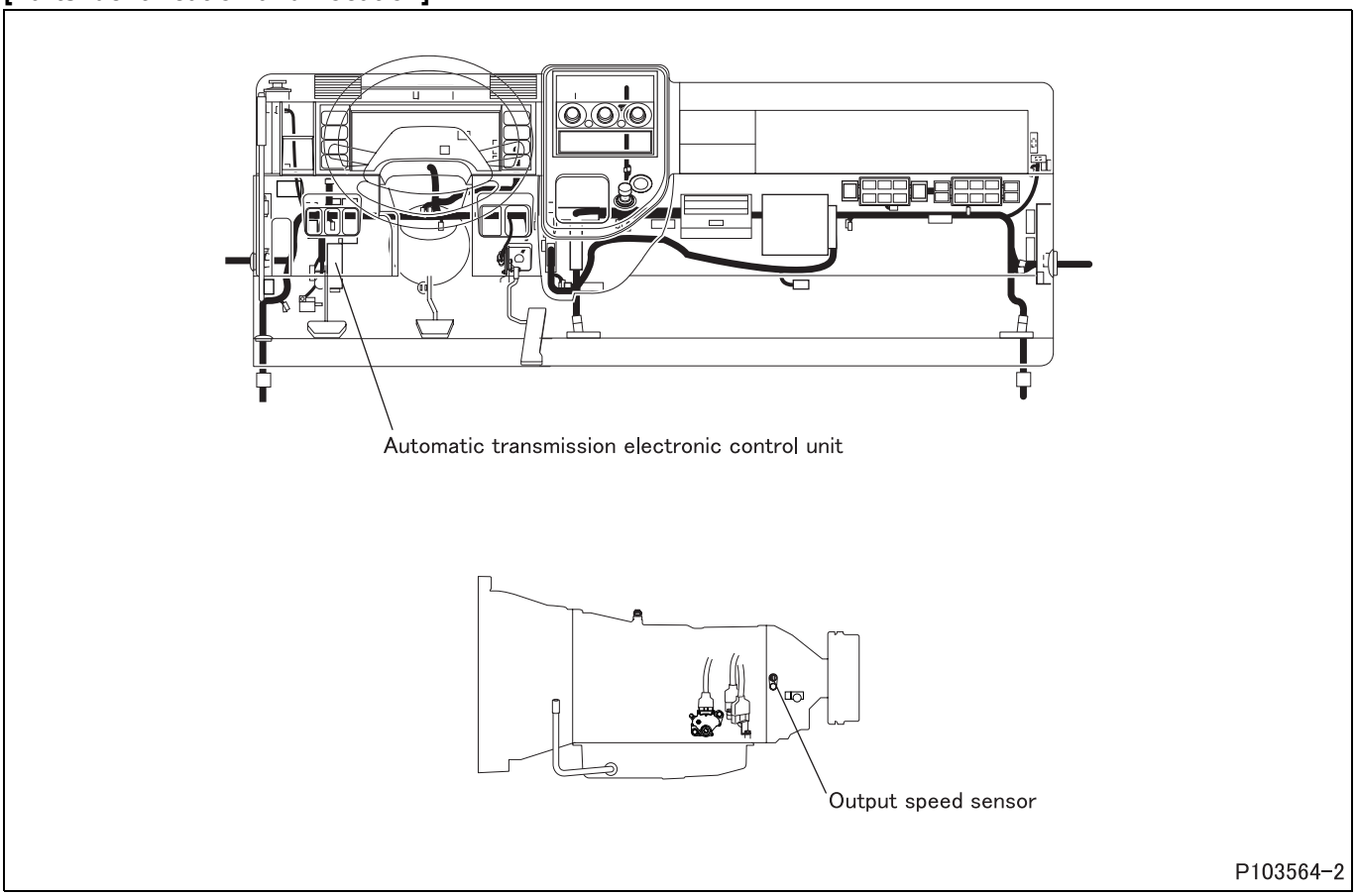

[Fault diagnosis]

- Perform checks in the sequence of the following steps.

Step 1	Inspection items		Inspection by control data
	Maintenance item		**<Multi-Use Tester not used>** Go to step 2. **<Multi-Use Tester used>** Measure item No. 25 “VEH Speed 2” of Service Data.
	Inspection condition		–
	Requirements		During vehicle run: Synchronous with speedometer.
	Inspection result (Is the judging standard satisfied?)	YES	Go to transient fault (See Gr00.).
		NO	Go to step 2.

Step 2	Inspection items		Inspection of electronic control unit connector
	Maintenance item		Inspection of connector
	Inspection condition		–
	Requirements		• Connector is properly connected. • No trace of water entry is found. • No corrosion is found in terminal. • Connection to terminal is appropriate.
	Inspection result (Is the judging standard satisfied?)	YES	Go to step 3.
		NO	Modify connector.

Step 3	Inspection items		Inspection of sensor connector
	Maintenance item		Inspection of connector
	Inspection condition		–
	Requirements		• Connector is properly connected. • No trace of water entry is found. • No corrosion is found in terminal. • Connection to terminal is appropriate.
	Inspection result (Is the judging standard satisfied?)	YES	Go to step 4.
		NO	Modify connector.

Step 4	Inspection items		Inspection of sensor unit
	Maintenance item		Measure current between terminals.
	Inspection condition		• Wire sensor as illustrated. • Move magnetic piece at sensor tip in illustrated direction. (Distance between sensor and magnetic piece: Within 5 mm [0.20 in.])
	Requirements		• Hi: 12 to 16 mA • Low: 4 to 8 mA
	Inspection result (Is the judging standard satisfied?)	YES	Go to step 5.
		NO	Replacement of sensor

<Step 4 inspection diagram>

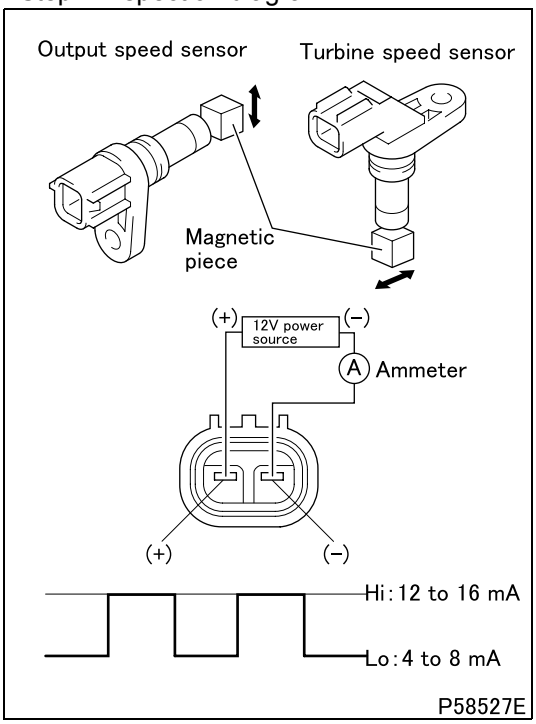

Step 5	Inspection items		Inspection of harness between sensor and electronic control unit (signal)
	Maintenance item		Check circuit between sensor connector terminal No. 2 and electronic control unit connector (CY24A) terminal No. 1.
	Inspection condition		Disconnect each device from harness and measure from connection side of harness connector.
	Requirements		There is continuity.
	Inspection result (Is the judging standard satisfied?)	YES	Go to step 6.
		NO	Replacement of harness

Step 6	Inspection items		Inspection of harness between sensor and electronic control unit (ground)
	Maintenance item		Check circuit between sensor connector terminal No. 1 and electronic control unit connector (CY24A) terminal No. 2.
	Inspection condition		Disconnect each device from harness and measure from connection side of harness connector.
	Requirements		There is continuity.
	Inspection result (Is the judging standard satisfied?)	YES	Go to step 7.
		NO	Replacement of harness

Step 7	Inspection items		Inspection by control data
	Maintenance item		**<Multi-Use Tester not used>** Check for recurrence of the same diagnosis code. **<Multi-Use Tester used>** Measure item No. 25 “VEH Speed 2” of Service Data.
	Inspection condition		–
	Requirements		**<Multi-Use Tester not used>** If the same diagnosis code occurs, replace electronic control unit. **<Multi-Use Tester used>** During vehicle run: Synchronous with speedometer.
	Inspection result (Is the judging standard satisfied?)	YES	Go to transient fault (See Gr00.).
		NO	Replacement of electronic control unit

[Fault code]
Diagnosis code: P0726/Flash code: 15
[Monitor ID]
6
[Fault (outline)]
Abnormality of engine speed signal
[Diagnosis check]
- Engine speed signal from engine electronic control unit is monitored during vehicle run.

[Code generation condition]
- Engine speed signal from engine electronic control unit remains less than specified (300 rpm) for 4 seconds.

[Diagnosis check timing]
- Fault diagnosis is performed once at the minimum during the driving cycle.

[Diagnostic requirement]
- Output shaft speed: above 1000 rpm
- Shift position: except P or N range

[Control effected by electronic control unit during fault]
- Control is effected with engine speed at specified value (Specified values differ by type of control.)
- Braking force control is inhibited.

[Probable cause of trouble]
- Open-circuit or short-circuit between electronic control unit and engine electronic control unit or between engine electronic control unit and engine speed sensor
- Malfunction of each connector
- Malfunction of engine speed sensor
- Malfunction of electronic control unit
- Malfunction of engine electronic control unit

[Recoverability]
- Recovered if signal becomes normal with starter switch in ON position.

[Electronic Control Unit Connection Diagram]

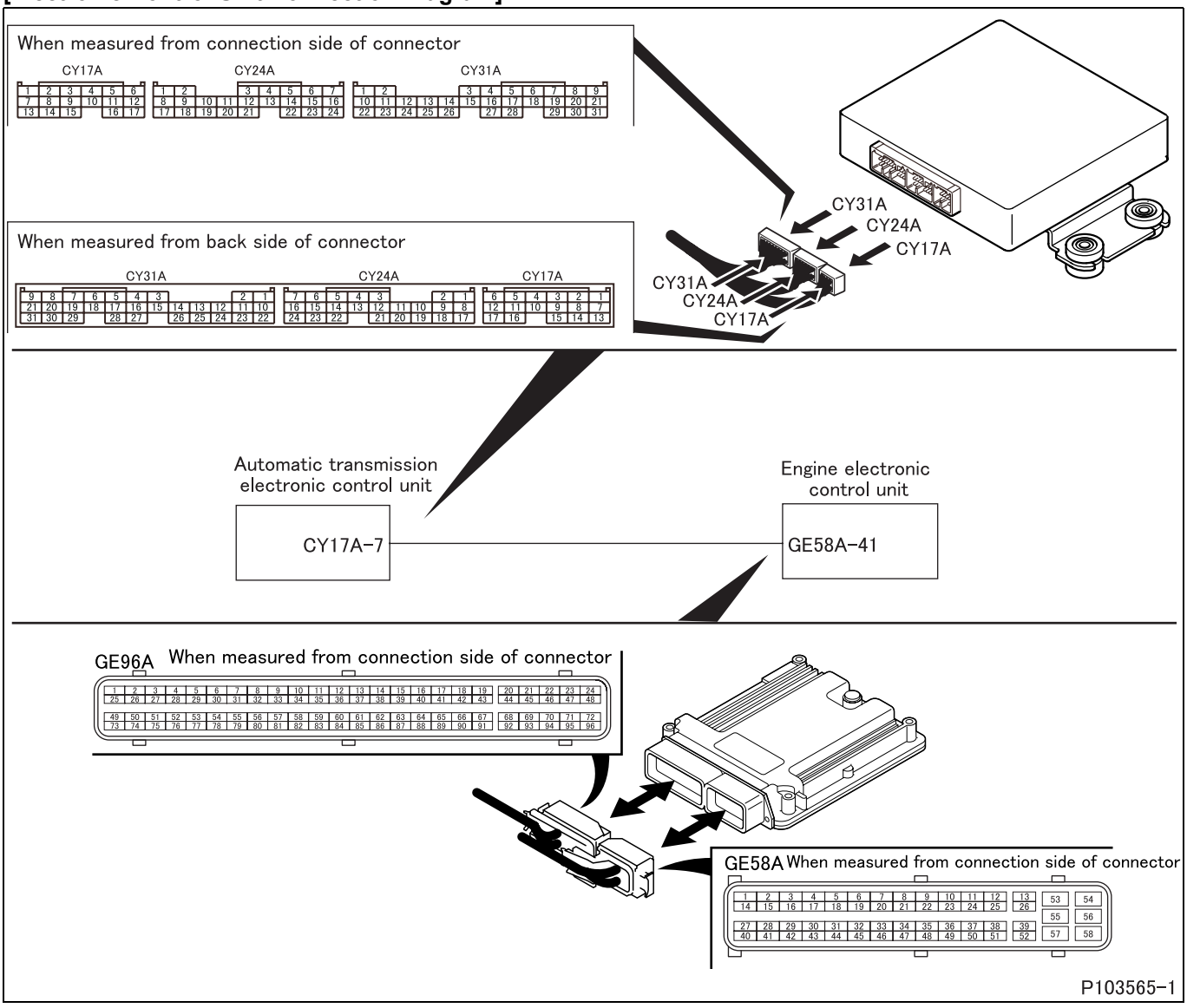

[Parts Identification and Location]

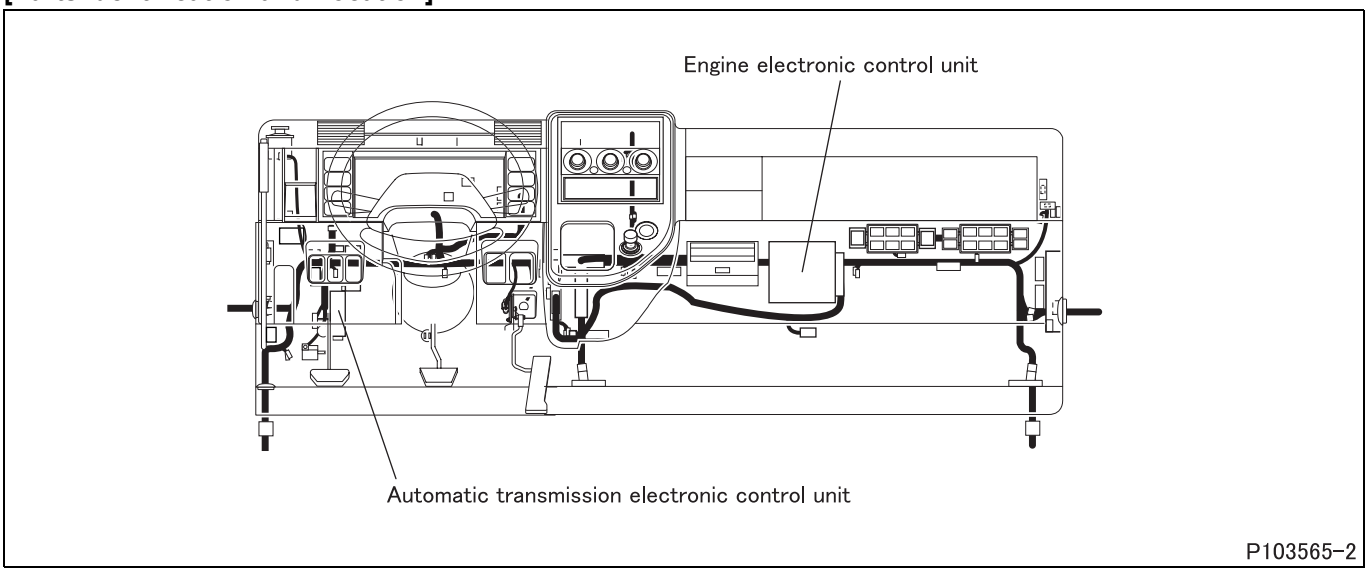

[Fault diagnosis]

- Perform checks in the sequence of the following steps.

Step 1	Inspection items		Inspection by control data
	Maintenance item		**<Multi-Use Tester not used>** Go to step 2. **<Multi-Use Tester used>** Measure item No. 15 “Engine Speed” of Service Data.
	Inspection condition		–
	Requirements		Racing (engine in operation): Synchronous with tachometer
	Inspection result (Is the judging standard satisfied?)	YES	Go to transient fault (See Gr00.).
		NO	Go to step 2.

Step 2	Inspection items		Inspection of electronic control unit connector
	Maintenance item		Inspection of connector
	Inspection condition		–
	Requirements		• Connector is properly connected. • No trace of water entry is found. • No corrosion is found in terminal. • Connection to terminal is appropriate.
	Inspection result (Is the judging standard satisfied?)	YES	Go to step 3.
		NO	Modify connector.

Step 3	Inspection items		Inspection of engine electronic control unit connector
	Maintenance item		Inspection of connector
	Inspection condition		–
	Requirements		• Connector is properly connected. • No trace of water entry is found. • No corrosion is found in terminal. • Connection to terminal is appropriate.
	Inspection result (Is the judging standard satisfied?)	YES	Go to step 4.
		NO	Modify connector.

Step 4	Inspection items		Inspection of engine electronic control unit
	Maintenance item		Inspection of engine electronic control unit
	Inspection condition		–
	Requirements		Free of errors related to engine speed
	Inspection result (Is the judging standard satisfied?)	YES	Go to step 5.
		NO	Perform troubleshooting on engine electronic control unit (See Gr13EA.).

Step 5	Inspection items		Inspection of harness between electronic control unit and engine electronic control unit
	Maintenance item		Check circuit between electronic control unit connector (CY17A) terminal No. 7 and engine electronic control unit connector (GE58A) terminal No. 41.
	Inspection condition		Disconnect each electronic control unit from harness and measure from connection side of harness connector.
	Requirements		There is continuity.
	Inspection result (Is the judging standard satisfied?)	YES	Go to step 6.
		NO	Modify harness.

Step 6	Inspection items		Inspection by control data
	Maintenance item		**<Multi-Use Tester not used>** Check for recurrence of the same diagnosis code. **<Multi-Use Tester used>** Measure item No. 15 “Engine Speed” of Service Data.
	Inspection condition		–
	Requirements		**<Multi-Use Tester not used>** If the same diagnosis code occurs, replace electronic control unit. (If replacement of electronic control unit does not eliminate trouble, replace engine electronic control unit.) **<Multi-Use Tester used>** Racing (engine in operation): Synchronous with tachometer
	Inspection result (Is the judging standard satisfied?)	YES	Go to transient fault (See Gr00.).
		NO	Replacement of harness (If replacement of electronic control unit does not eliminate trouble, replace engine electronic control unit.)

[Fault code]
Diagnosis code: P0730/Flash code: 37
[Monitor ID]
7, 8
[Fault (outline)]
Incorrect gear ratio
[Diagnosis check]
- Turbine speed sensor, output speed sensor and ongoing gear ratio are monitored to determine whether control is effected at optimal gear ratio.

[Code generation condition]
- The difference of more than 500 rpm between turbine speed and output shaft speed × gear ratio continues for 0.5 second.

[Diagnosis check timing]
- Fault diagnosis is performed each time when the applicable gear speed is selected.

[Diagnostic requirement]
- Each solenoid, oil pressure switch, inhibitor switch, output speed sensor, or turbine speed sensor related diagnosis code does not occur.
- Automatic transmission fluid temperature: above –10°C {14°F}
- Output shaft speed: above 250 rpm
- Shift position: D, 3 or 2 range
- Shift solenoids: Disengaged
- Accelerator pedal position: 5% or more <1st>
- Turbine speed is 100 rpm slower than the engine speed <1st>

[Control effected by electronic control unit during fault]
- Control is effected on fixed speed gear output (3rd).

[Probable cause of trouble]
- Open-circuit or short-circuit between electronic control unit and turbine speed sensor/output speed sensor
- Malfunction of each connector
- Malfunction of turbine speed sensor or output speed sensor
- Malfunction of electronic control unit
- Malfunction of automatic transmission

[Recoverability]
- Recovered if signal becomes normal when starter switch is turned OFF to ON (power supply resumed to electronic control unit).

[Electronic Control Unit Connection Diagram]

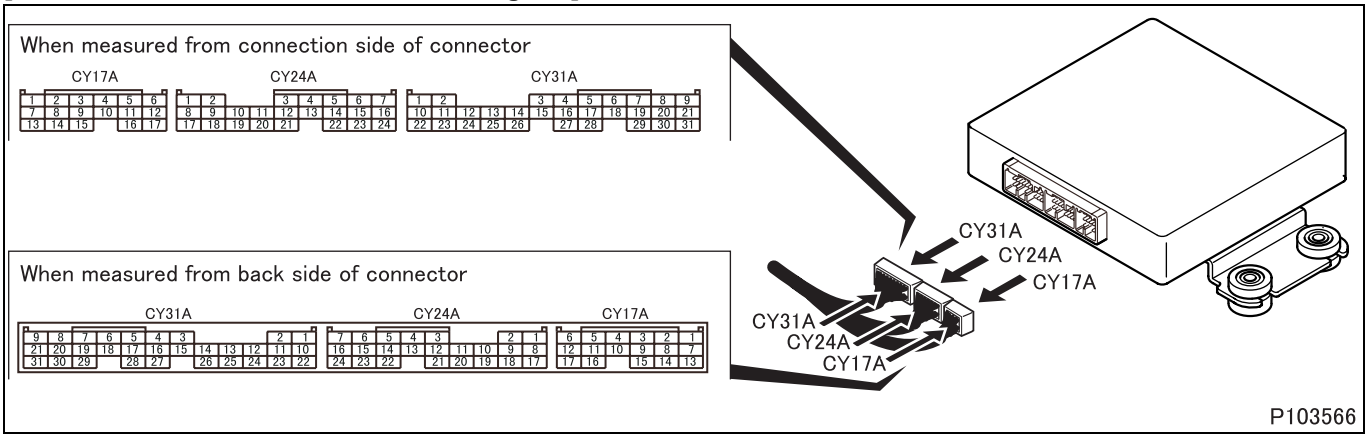

[Fault diagnosis]

- Perform checks in the sequence of the following steps.

Step 1	Inspection items		Inspection by control data
	Maintenance item		**<Multi-Use Tester not used>** Go to step 2. **<Multi-Use Tester used>** Measure item No. 16 “Turbine Speed”, No. 25 “VEH Speed 2” and No. 56 “Gear Pos.” of Service Data.
	Inspection condition		• Output shaft speed [rpm]: Item No. 25 “VEH Speed 2” [MPH] × 4.268 × final gear ratio/tire radius [m] • Turbine speed [rpm]: Item No. 16 “Turbine Speed” • Calculated gear ratio: Turbine speed/Output shaft speed • Specified gear ratio: 1st (3.742), 2nd (2.003), 3rd (1.343), 4th (1.000), 5th (0.773), 6th (0.634), Rev (3.539)
	Requirements		Specified and calculated gear ratios at corresponding gear position: Matched
	Inspection result (Is the judging standard satisfied?)	YES	Go to transient fault (See Gr00.).
		NO	Go to step 2.

Step 2	Inspection items		Inspection of automatic transmission
	Maintenance item		**<Multi-Use Tester not used>** Measure values of voltage between the following terminals. • Oil pressure switch 1: Electronic control unit connector (CY17A) terminal No. 6 (+) - Connector (CY24A) terminal No. 8 (–) • Oil pressure switch 2: Electronic control unit connector (CY17A) terminal No. 12 (+) - Connector (CY24A) terminal No. 8 (–) • Oil pressure switch 3: Electronic control unit connector (CY17A) terminal No. 17 (+) - Connector (CY24A) terminal No. 8 (–) • Oil pressure switch 4: Electronic control unit connector (CY17A) terminal No. 5 (+) - Connector (CY24A) terminal No. 8 (–) • Oil pressure switch 5: Electronic control unit connector (CY17A) terminal No. 11 (+) - Connector (CY24A) terminal No. 8 (–) • Oil pressure switch 6: Electronic control unit connector (CY17A) terminal No. 16 (+) - Connector (CY24A) terminal No. 8 (–) • Shift solenoid 1: Electronic control unit connector (CY31A) terminal No. 1 (+) - Connector (CY24A) terminal No. 8 (–) • Shift solenoid 2: Electronic control unit connector (CY31A) terminal No. 2 (+) - Connector (CY24A) terminal No. 8 (–) • Shift solenoid 3: Electronic control unit connector (CY31A) terminal No. 3 (+) - Connector (CY24A) terminal No. 8 (–) **<Multi-Use Tester used>** Measure item No. 31 “Shift Valve 1”, No. 32 “Shift Valve 2”, No. 33 “Shift Valve 3”, No. 56 “Gear Pos.”, No. 61 “Oil Press SW1”, No. 62 “Oil Press SW2”, No. 63 “Oil Press SW3”, No. 64 “Oil Press SW4”, No. 65 “Oil Press SW5” and No. 66 “Oil Press SW6”.
	Inspection condition		Operating status of oil pressure switches 1 through 6 and shift solenoids 1 through 3 is checked for match with respective gear positions (1st, 2nd ... 6th). **<Multi-Use Tester not used>** Measure from back side of harness connector with electronic control unit connected to harness.
	Requirements		**<Multi-Use Tester not used>** Matched (oil pressure switch: O if 0 V; shift solenoid: O if 12 V) **<Multi-Use Tester used>** Matched
	Inspection result (Is the judging standard satisfied?)	YES	Go to step 3.
		NO	Replacement of automatic transmission

<Step 2 operating status diagram>

	1st	2nd	3rd	4th	5th	6th
Oil pressure switch 1		○		○		○
Oil pressure switch 2	○		○		○	
Oil pressure switch 3			○	○		
Oil pressure switch 4				○	○	○
Oil pressure switch 5	○					
Oil pressure switch 6	○					
Shift solenoid 1			○	○		
Shift solenoid 2				○	○	○
Shift solenoid 3	○					

○ : ON P60524E

Step 3	Inspection items		Inspection by control data
	Maintenance item		**<Multi-Use Tester not used>** Check for recurrence of the same diagnosis code. **<Multi-Use Tester used>** Measure item No. 16 “Turbine Speed”, No. 25 “VEH Speed 2” and No. 56 “Gear Pos.” of Service Data.
	Inspection condition		• Output shaft speed [rpm]: Item No. 25 “VEH Speed 2” [MPH] × 4.268 × final gear ratio/tire radius [m] • Turbine speed [rpm]: Item No. 16 “Turbine Speed” • Calculated gear ratio: Turbine speed/Output shaft speed • Specified gear ratio: 1st (3.742), 2nd (2.003), 3rd (1.343), 4th (1.000), 5th (0.773), 6th (0.634), Rev (3.539)
	Requirements		**<Multi-Use Tester not used>** If the same diagnosis code occurs, replace automatic transmission. **<Multi-Use Tester used>** Specified and calculated gear ratios at corresponding gear position: Matched
	Inspection result (Is the judging standard satisfied?)	YES	Go to transient fault (See Gr00.).
		NO	Replacement of automatic transmission

[Fault code]
Diagnosis code: P0746/Flash code: 41
[Monitor ID]
38, 39
[Fault (outline)]
Linear solenoid 1 binds in OFF state.
[Diagnosis check]
- Linear solenoid 1 is monitored for fault when switched from low to high pressure according to the response of oil pressure switch 1.

[Code generation condition]
- Linear solenoid 1 is judged faulty when oil pressure switch 1 remains OFF (low pressure) for 1.5 second, then N, R or P range is selected and oil pressure switch 8 remains OFF for 0.5 second (check if stuck ON).

[Diagnosis check timing]
- Fault diagnosis is performed each time when the control is activated.

[Diagnostic requirement]
- Oil pressure switch 8: ON
- Shift position: D, 3 or 2 range
- Automatic transmission fluid temperature: above –10°C {14°F} <used for a part of judgment>

[Control effected by electronic control unit during fault]
- Lockup control is turned OFF
- Control is effected on fixed speed gear output (3rd).

[Probable cause of trouble]
- Open-circuit or short-circuit between electronic control unit and linear solenoid 1/oil pressure switch 1
- Malfunction of each connector
- Malfunction of linear solenoid 1/oil pressure switch 1
- Malfunction of electronic control unit

[Recoverability]
- Recovered if signal becomes normal when starter switch is turned OFF to ON (power supply resumed to electronic control unit).

[Electronic Control Unit Connection Diagram]

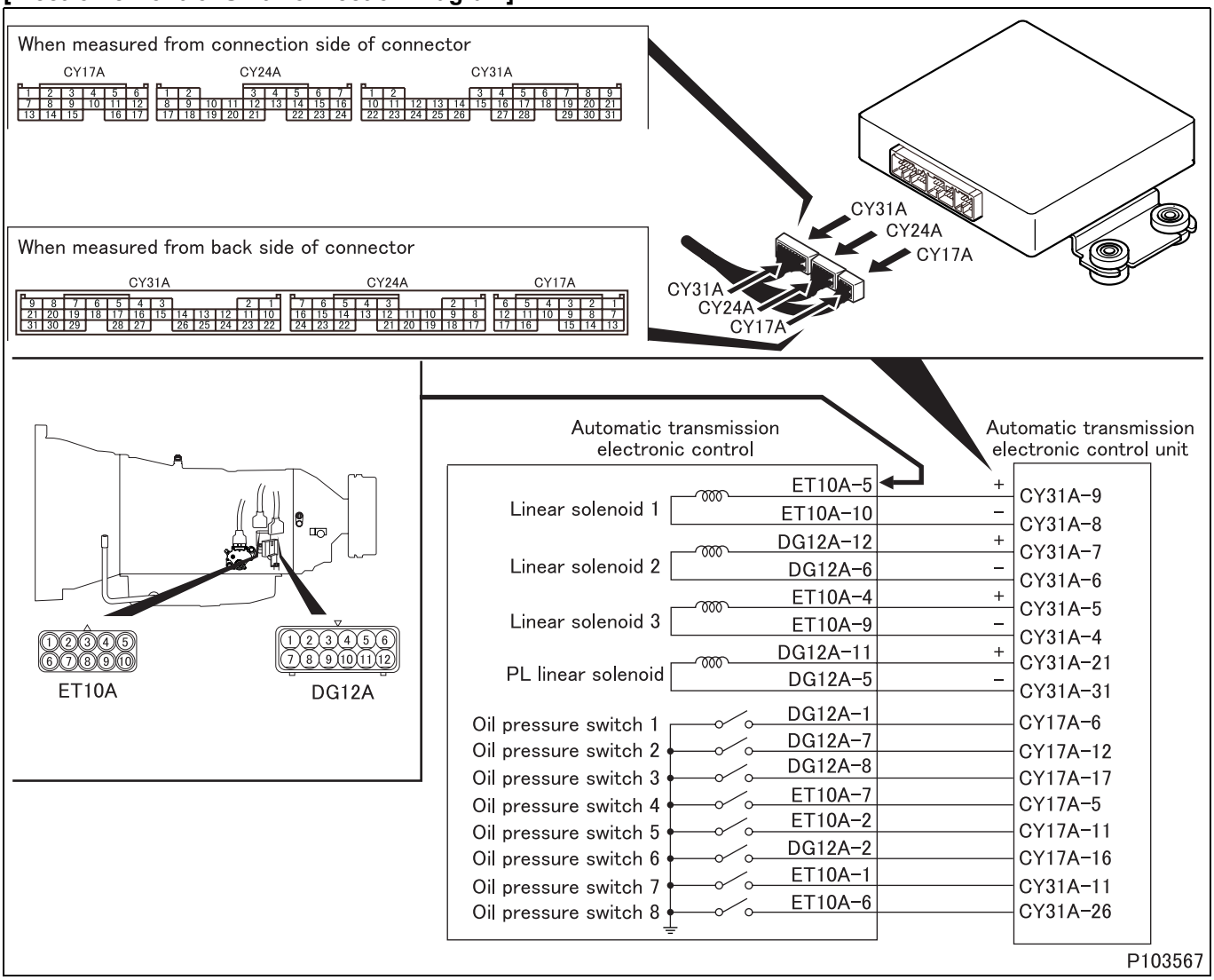

[Parts Identification and Location]

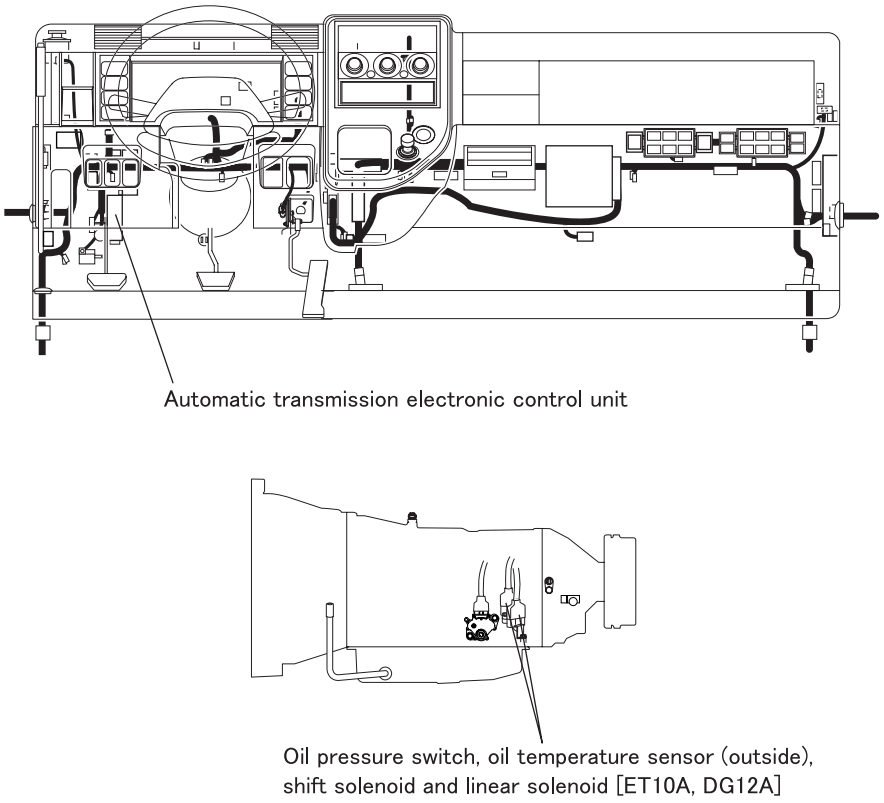

[Fault diagnosis]

- Perform checks in the sequence of the following steps.

Step 1	Inspection items		Inspection by control data
	Maintenance item		**<Multi-Use Tester not used>** Go to step 2. **<Multi-Use Tester used>** Measure item No. 26 “Linear Sol Press 1” of Service Data.
	Inspection condition		Vehicle run
	Requirements		• During speed change (1st to 2nd, 3rd to 4th, 5th to 6th): Rises • During speed change (2nd to 3rd, 4th to 5th): Declines
	Inspection result (Is the judging standard satisfied?)	YES	Go to transient fault (See Gr00.).
		NO	Go to step 2.

Step 2	Inspection items		Inspection by control data
	Maintenance item		**<Multi-Use Tester not used>** Measure value of voltage between electronic control unit connector (CY17A) terminal No. 6 (+) and connector (CY24A) terminal No. 8 (–). **<Multi-Use Tester used>** Measure item No. 61 “Oil Press SW 1” of Service Data.
	Inspection condition		Engine in operation **<Multi-Use Tester not used>** Measure from back side of harness connector with electronic control unit connected to harness.
	Requirements		**<Multi-Use Tester not used>** • In 2nd, 4th, 6th gears: 0 V • In 1st, 3rd, 5th gears: 12 V **<Multi-Use Tester used>** • In 2nd, 4th, 6th gears: ON • In 1st, 3rd, 5th gears: OFF
	Inspection result (Is the judging standard satisfied?)	YES	Go to transient fault (See Gr00.).
		NO	Go to step 3.

Step 3	Inspection items		Inspection by electronic control unit connector (signal)
	Maintenance item		Measure value of resistance between connector (CY31A) terminal No. 9 and 8.
	Inspection condition		• Disconnect electronic control unit and harness, and measure from connection side of harness connector. • Starter switch: OFF
	Requirements		5.5 ± 0.5 Ω
	Inspection result (Is the judging standard satisfied?)	YES	Go to step 4.
		NO	Go to step 5.

Step 4	Inspection items		Inspection of electronic control unit connector
	Maintenance item		Inspection of connector
	Inspection condition		–
	Requirements		• Connector is properly connected. • No trace of water entry is found. • No corrosion is found in terminal. • Connection to terminal is appropriate.
	Inspection result (Is the judging standard satisfied?)	YES	Go to step 9.
		NO	Modify connector.

Step 5	Inspection items		Inspection of solenoid connector
	Maintenance item		Inspection of connector
	Inspection condition		–
	Requirements		• Connector is properly connected. • No trace of water entry is found. • No corrosion is found in terminal. • Connection to terminal is appropriate.
	Inspection result (Is the judging standard satisfied?)	YES	Go to step 6.
		NO	Modify connector.

Step 6	Inspection items		Inspection of solenoid unit
	Maintenance item		Measure value of resistance between connector (ET10A) terminal No. 5 and 10.
	Inspection condition		• Disconnect connector and measure solenoid side. • Starter switch: OFF
	Requirements		5.5 ± 0.5 Ω
	Inspection result (Is the judging standard satisfied?)	YES	Go to step 7.
		NO	Replacement of automatic transmission

<Step 6 inspection diagram>

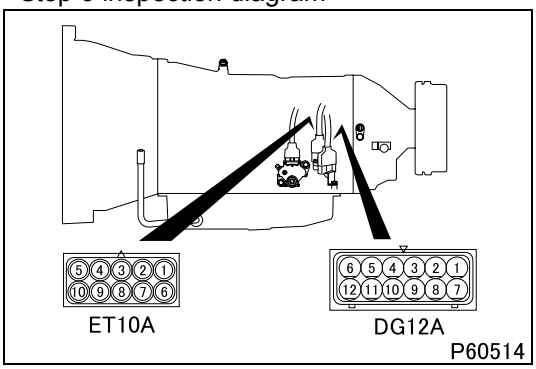

Step 7	Inspection items		Inspection of harness between solenoid and electronic control unit (power supply)
	Maintenance item		Check circuit between connector (ET10A) terminal No. 5 and electronic control unit connector (CY31A) terminal No. 9.
	Inspection condition		Disconnect each device from harness and measure from connection side of harness connector.
	Requirements		There is continuity.
	Inspection result (Is the judging standard satisfied?)	YES	Go to step 8.
		NO	Modify harness.

Step 8	Inspection items		Inspection of harness between solenoid and electronic control unit (ground)
	Maintenance item		Check circuit between connector (ET10A) terminal No. 10 and electronic control unit connector (CY31A) terminal No. 8.
	Inspection condition		Disconnect each device from harness and measure from connection side of harness connector.
	Requirements		There is continuity.
	Inspection result (Is the judging standard satisfied?)	YES	Go to step 9.
		NO	Modify harness.

Step 9	Inspection items		Inspection by control data
	Maintenance item		**<Multi-Use Tester not used>** Check for recurrence of the same diagnosis code. **<Multi-Use Tester used>** Measure item No. 26 “Linear Sol Press 1” of Service Data.
	Inspection condition		Vehicle run
	Requirements		**<Multi-Use Tester not used>** If the same diagnosis code occurs, replace electronic control unit. **<Multi-Use Tester used>** • During speed change (1st to 2nd, 3rd to 4th, 5th to 6th): Rises • During speed change (2nd to 3rd, 4th to 5th): Declines
	Inspection result (Is the judging standard satisfied?)	YES	Go to transient fault (See Gr00.).
		NO	Go to step 10.

Step 10	Inspection items		Inspection by control data
	Maintenance item		**<Multi-Use Tester not used>** Measure value of voltage between electronic control unit connector (CY17A) terminal No. 6 (+) and connector (CY24A) terminal No. 8 (–). **<Multi-Use Tester used>** Measure item No. 61 “Oil Press SW 1” of Service Data.
	Inspection condition		Engine in operation **<Multi-Use Tester not used>** Measure from back side of harness connector with electronic control unit connected to harness.
	Requirements		**<Multi-Use Tester not used>** • In 2nd, 4th, 6th gears: 0 V • In 1st, 3rd, 5th gears: 12 V **<Multi-Use Tester used>** • In 2nd, 4th, 6th gears: ON • In 1st, 3rd, 5th gears: OFF
	Inspection result (Is the judging standard satisfied?)	YES	Go to transient fault (See Gr00.).
		NO	• Check if a diagnosis code related to the oil pressure switch 1 occurs. If it does, perform troubleshooting of the code. • Replacement of electronic control unit

[Fault code]
Diagnosis code: P0747/Flash code: 41
[Monitor ID]
40
[Fault (outline)]
Linear solenoid 1 binds in ON state.
[Diagnosis check]
- Linear solenoid 1 is monitored for fault when switched from high to low pressure according to the response of oil pressure switch 1.

[Code generation condition]
- Oil pressure switch 1 remains ON (high pressure).

[Diagnosis check timing]
- Fault diagnosis is performed each time when the control is activated.

[Diagnostic requirement]
- After linear solenoid 1 switched from high to low pressure

[Control effected by electronic control unit during fault]
- Lockup control is turned OFF
- Control is effected on fixed speed gear output (4th).

[Probable cause of trouble]
- Open-circuit or short-circuit of harness between electronic control unit and linear solenoid 1 or oil pressure switch 1
- Malfunction of each connector
- Malfunction of linear solenoid 1 or oil pressure switch 1
- Malfunction of electronic control unit

[Recoverability]
- Recovered if signal becomes normal when starter switch is turned OFF to ON (power supply resumed to electronic control unit).

[Electronic Control Unit Connection Diagram]

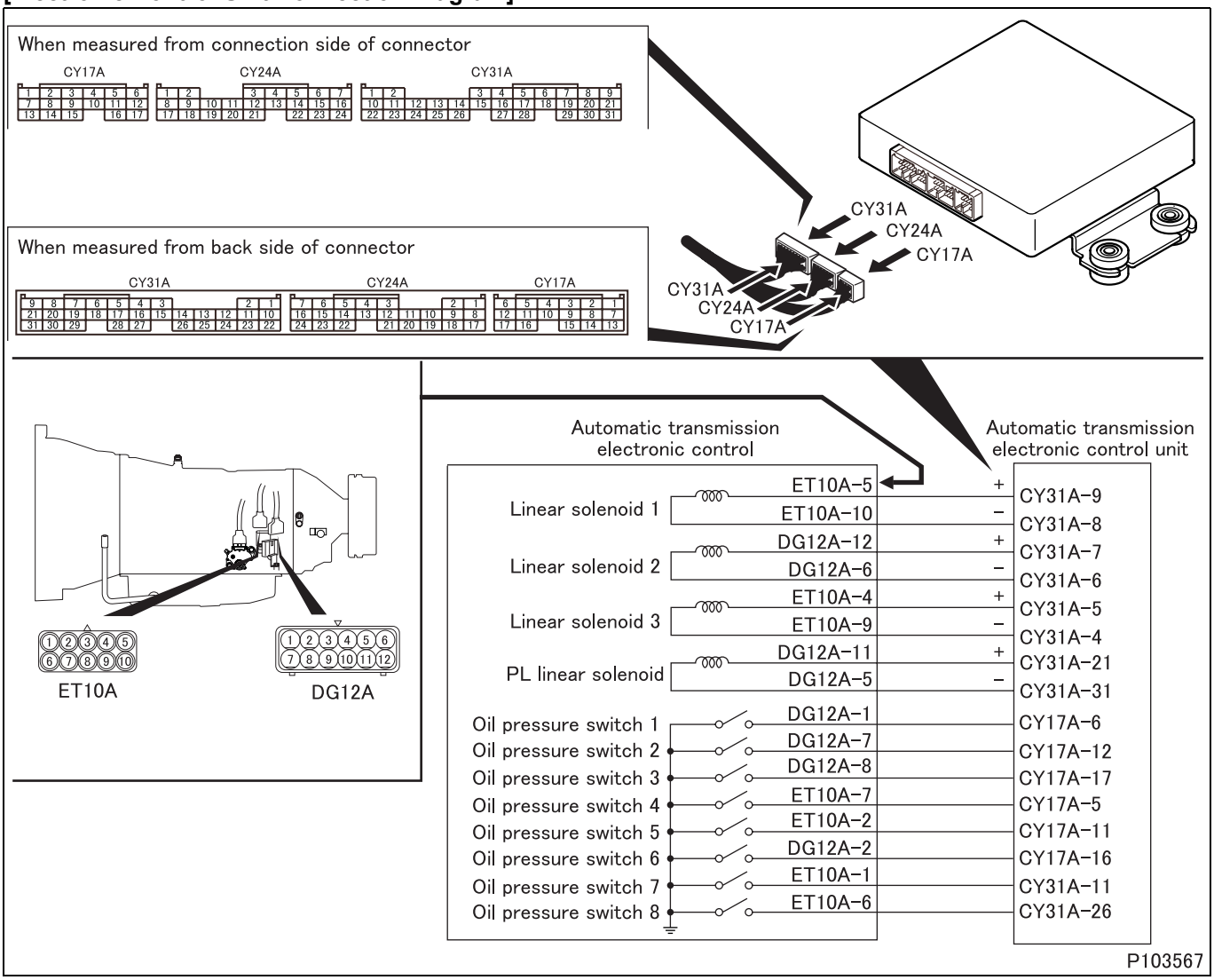

[Parts Identification and Location]

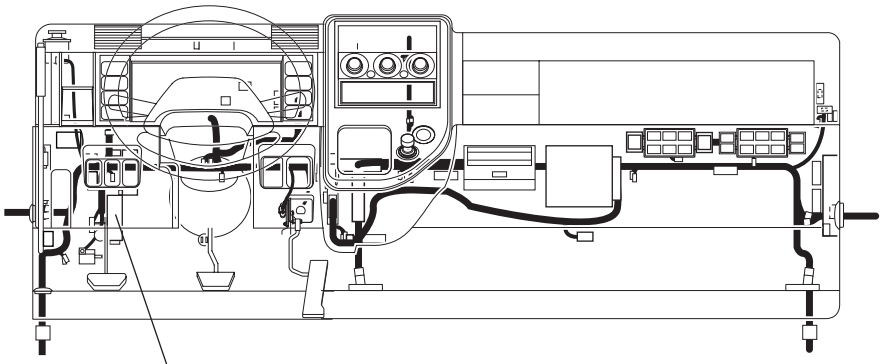

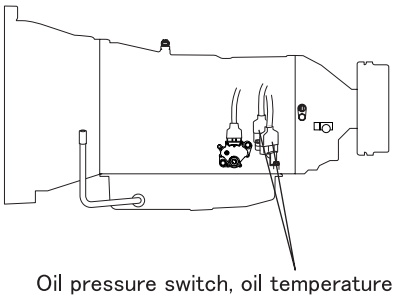

P103560-2

[Fault diagnosis]

- Perform checks in the sequence of the following steps.

Step 1	Inspection items		Inspection by control data
	Maintenance item		**<Multi-Use Tester not used>** Go to step 2. **<Multi-Use Tester used>** Measure item No. 26 “Linear Sol Press 1” of Service Data.
	Inspection condition		Vehicle run
	Requirements		• During speed change (1st to 2nd, 3rd to 4th, 5th to 6th): Rises • During speed change (2nd to 3rd, 4th to 5th): Declines
	Inspection result (Is the judging standard satisfied?)	YES	Go to transient fault (See Gr00.).
		NO	Go to step 2.

Step 2	Inspection items		Inspection by control data
	Maintenance item		**<Multi-Use Tester not used>** Measure value of voltage between electronic control unit connector (CY17A) terminal No. 6 (+) and connector (CY24A) terminal No. 8 (–). **<Multi-Use Tester used>** Measure item No. 61 “Oil Press SW 1” of Service Data.
	Inspection condition		Engine in operation **<Multi-Use Tester not used>** Measure from back side of harness connector with electronic control unit connected to harness.
	Requirements		**<Multi-Use Tester not used>** • In 2nd, 4th, 6th gears: 0 V • In 1st, 3rd, 5th gears: 12 V **<Multi-Use Tester used>** • In 2nd, 4th, 6th gears: ON • In 1st, 3rd, 5th gears: OFF
	Inspection result (Is the judging standard satisfied?)	YES	Go to transient fault (See Gr00.).
		NO	Go to step 3.

Step 3	Inspection items		Inspection by electronic control unit connector (signal)
	Maintenance item		Measure value of resistance between connector (CY31A) terminal No. 9 and 8.
	Inspection condition		• Disconnect electronic control unit and harness, and measure from connection side of harness connector. • Starter switch: OFF
	Requirements		5.5 ± 0.5 Ω
	Inspection result (Is the judging standard satisfied?)	YES	Go to step 4.
		NO	Go to step 5.

Step 4	Inspection items		Inspection of electronic control unit connector
	Maintenance item		Inspection of connector
	Inspection condition		–
	Requirements		• Connector is properly connected. • No trace of water entry is found. • No corrosion is found in terminal. • Connection to terminal is appropriate.
	Inspection result (Is the judging standard satisfied?)	YES	Go to step 9.
		NO	Modify connector.

Step 5	Inspection items		Inspection of solenoid connector
	Maintenance item		Inspection of connector
	Inspection condition		–
	Requirements		• Connector is properly connected. • No trace of water entry is found. • No corrosion is found in terminal. • Connection to terminal is appropriate.
	Inspection result (Is the judging standard satisfied?)	YES	Go to step 6.
		NO	Modify connector.

Step 6	Inspection items		Inspection of solenoid unit
	Maintenance item		Measure value of resistance between connector (ET10A) terminal No. 5 and 10.
	Inspection condition		• Disconnect connector and measure solenoid side. • Starter switch: OFF
	Requirements		5.5 ± 0.5 Ω
	Inspection result (Is the judging standard satisfied?)	YES	Go to step 7.
		NO	Replacement of automatic transmission

<Step 6 inspection diagram>

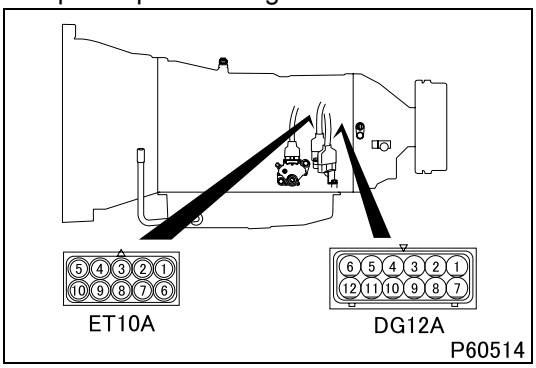

Step 7	Inspection items		Inspection of harness between solenoid and electronic control unit (power supply)
	Maintenance item		Check circuit between connector (ET10A) terminal No. 5 and electronic control unit connector (CY31A) terminal No. 9.
	Inspection condition		Disconnect each device from harness and measure from connection side of harness connector.
	Requirements		There is continuity.
	Inspection result (Is the judging standard satisfied?)	YES	Go to step 8.
		NO	Modify harness.

Step 8	Inspection items		Inspection of harness between solenoid and electronic control unit (ground)
	Maintenance item		Check circuit between connector (ET10A) terminal No. 10 and electronic control unit connector (CY31A) terminal No. 8.
	Inspection condition		Disconnect each device from harness and measure from connection side of harness connector.
	Requirements		There is continuity.
	Inspection result (Is the judging standard satisfied?)	YES	Go to step 9.
		NO	Modify harness.

Step 9	Inspection items		Inspection by control data
	Maintenance item		**<Multi-Use Tester not used>** Check for recurrence of the same diagnosis code. **<Multi-Use Tester used>** Measure item No. 26 “Linear Sol Press 1” of Service Data.
	Inspection condition		Vehicle run
	Requirements		**<Multi-Use Tester not used>** If the same diagnosis code occurs, replace electronic control unit. **<Multi-Use Tester used>** • During speed change (1st to 2nd, 3rd to 4th, 5th to 6th): Rises. • During speed change (2nd to 3rd, 4th to 5th): Declines.
	Inspection result (Is the judging standard satisfied?)	YES	Go to transient fault (See Gr00.).
		NO	Go to step 10.

Step 10	Inspection items		Inspection by control data
	Maintenance item		**<Multi-Use Tester not used>** Measure value of voltage between electronic control unit connector (CY17A) terminal No. 6 (+) and connector (CY24A) terminal No. 8 (–). **<Multi-Use Tester used>** Measure item No. 61 “Oil Press SW 1” of Service Data.
	Inspection condition		Engine in operation **<Multi-Use Tester not used>** Measure from back side of harness connector with electronic control unit connected to harness.
	Requirements		**<Multi-Use Tester not used>** • In 2nd, 4th, 6th gears: 0 V • In 1st, 3rd, 5th gears: 12 V **<Multi-Use Tester used>** • In 2nd, 4th, 6th gears: ON • In 1st, 3rd, 5th gears: OFF
	Inspection result (Is the judging standard satisfied?)	YES	Go to transient fault (See Gr00.).
		NO	• Check if a diagnosis code related to the oil pressure switch 1 occurs. If it does, perform troubleshooting of the code. • Replacement of electronic control unit

[Fault code]
Diagnosis code: P0748/Flash code: 26
[Monitor ID]
21, 22
[Fault (outline)]
Linear solenoid 1 is open-circuited or short-circuited.
[Diagnosis check]
- Resistance and current value in linear solenoid 1 is monitored for fault.

[Code generation condition]
Linear solenoid is judged faulty in either of the following cases.
- Resistance across the linear solenoid 1 remains higher than the specification (100 kΩ) for 0.065 second (open-circuited or circuit shorted to power supply).
- Current flowing in the linear solenoid 1 remains higher than the specification (4A) for 0.065 second (circuit shorted to ground).

[Diagnosis check timing]
- Fault diagnosis is continuously performed.

[Diagnostic requirement]
- Continuous

[Control effected by electronic control unit during fault]
- Lockup control is turned OFF
- Control is effected on fixed speed gear output (3rd for open-circuit, 4th for short-circuit).

[Probable cause of trouble]
- Open-circuit or short-circuit of harness between electronic control unit and linear solenoid 1
- Malfunction of each connector
- Malfunction of linear solenoid 1
- Malfunction of electronic control unit

[Recoverability]
- Recovered if signal becomes normal when starter switch is turned OFF to ON (power supply resumed to electronic control unit).

[Electronic Control Unit Connection Diagram]

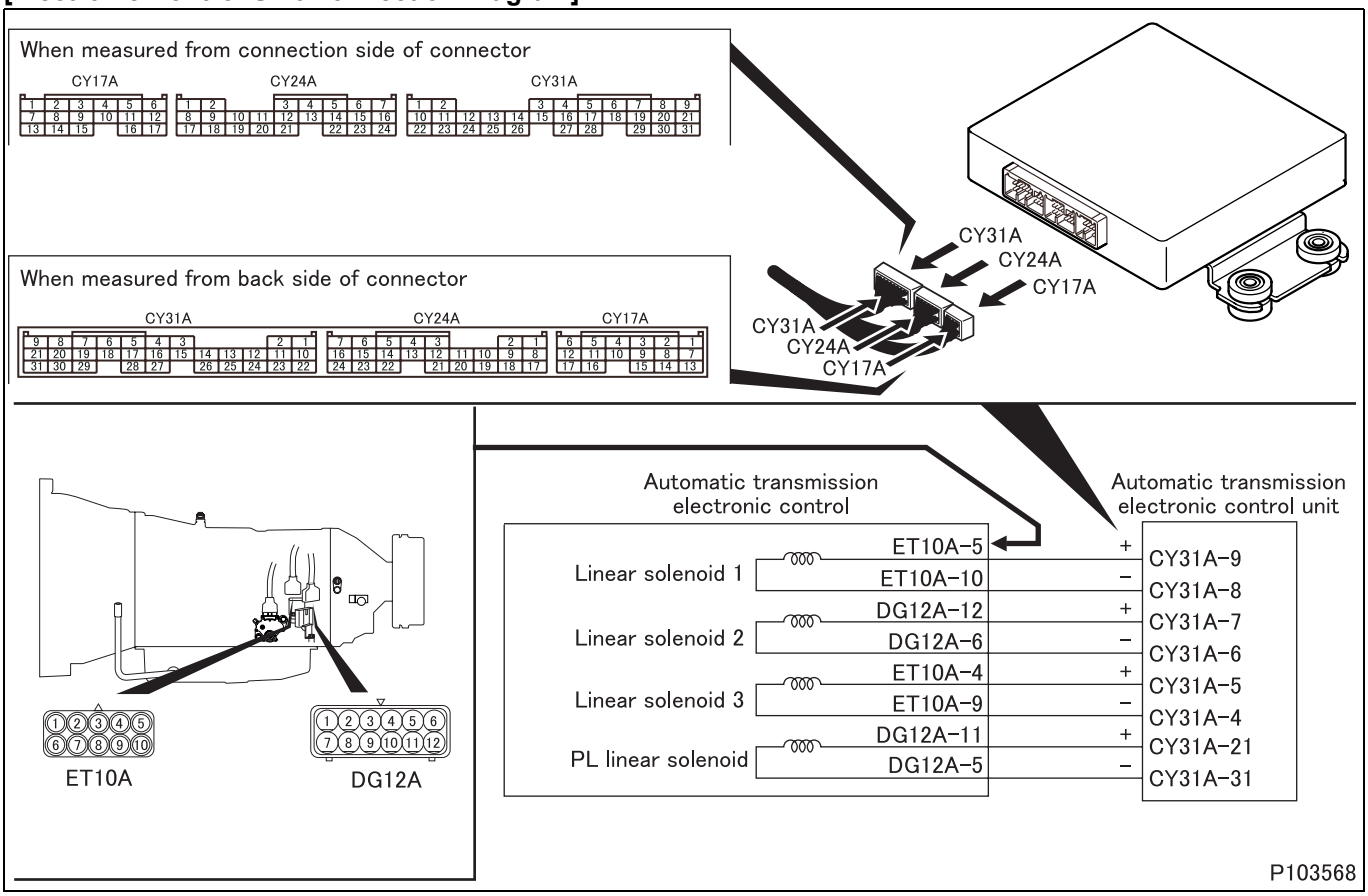

P103568

[Parts Identification and Location]

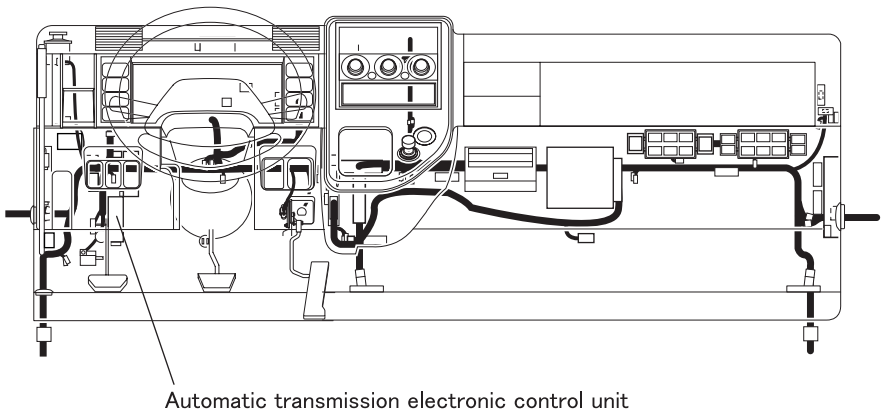

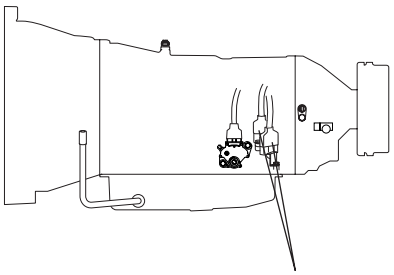

P103560-2

[Fault diagnosis]

- Perform checks in the sequence of the following steps.

Step 1	Inspection items		Inspection by control data
	Maintenance item		**<Multi-Use Tester not used>** Go to step 2. **<Multi-Use Tester used>** Measure item No. 26 “Linear Sol Press 1” of Service Data.
	Inspection condition		Vehicle run
	Requirements		• During speed change (1st to 2nd, 3rd to 4th, 5th to 6th): Rises • During speed change (2nd to 3rd, 4th to 5th): Declines
	Inspection result (Is the judging standard satisfied?)	YES	Go to transient fault (See Gr00.).
		NO	Go to step 2.

Step 2	Inspection items		Inspection by electronic control unit connector (signal)
	Maintenance item		Measure value of resistance between connector (CY31A) terminal No. 9 and 8.
	Inspection condition		• Disconnect electronic control unit and harness, and measure from connection side of harness connector. • Starter switch: OFF
	Requirements		5.5 ± 0.5 Ω
	Inspection result (Is the judging standard satisfied?)	YES	Go to step 3.
		NO	Go to step 4.

Step 3	Inspection items		Inspection of electronic control unit connector
	Maintenance item		Inspection of connector
	Inspection condition		–
	Requirements		• Connector is properly connected. • No trace of water entry is found. • No corrosion is found in terminal. • Connection to terminal is appropriate.
	Inspection result (Is the judging standard satisfied?)	YES	Go to step 8.
		NO	Modify connector.

Step 4	Inspection items		Inspection of solenoid connector
	Maintenance item		Inspection of connector
	Inspection condition		–
	Requirements		• Connector is properly connected. • No trace of water entry is found. • No corrosion is found in terminal. • Connection to terminal is appropriate.
	Inspection result (Is the judging standard satisfied?)	YES	Go to step 5.
		NO	Modify connector.

Step 5	Inspection items		Inspection of solenoid unit
	Maintenance item		Measure value of resistance between connector (ET10A) terminal No. 5 and 10.
	Inspection condition		• Disconnect connector, and measure solenoid side terminal. • Starter switch: OFF
	Requirements		5.5 ± 0.5 Ω
	Inspection result (Is the judging standard satisfied?)	YES	Go to step 6.
		NO	Replacement of automatic transmission

<Step 5 inspection diagram>

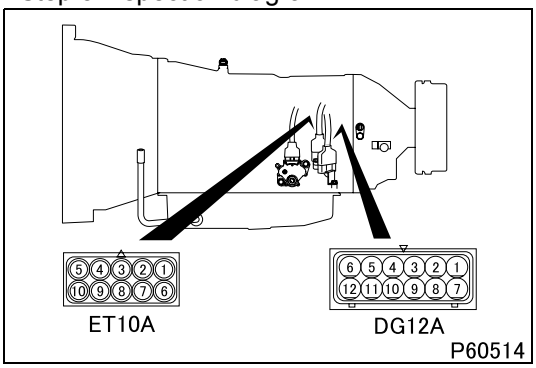

Step 6	Inspection items		Inspection of harness between solenoid and electronic control unit (power supply)
	Maintenance item		Check circuit between connector (ET10A) terminal No. 5 and electronic control unit connector (CY31A) terminal No. 9.
	Inspection condition		Disconnect each device from harness and measure from connection side of harness connector.
	Requirements		There is continuity.
	Inspection result (Is the judging standard satisfied?)	YES	Go to step 7.
		NO	Modify harness.

Step 7	Inspection items		Inspection of harness between solenoid and electronic control unit (ground)
	Maintenance item		Check circuit between connector (ET10A) terminal No. 10 and electronic control unit connector (CY31A) terminal No. 8.
	Inspection condition		Disconnect each device from harness and measure from connection side of harness connector.
	Requirements		There is continuity.
	Inspection result (Is the judging standard satisfied?)	YES	Go to step 8.
		NO	Modify harness.

Step 8	Inspection items		Inspection by control data
	Maintenance item		**<Multi-Use Tester not used>** Check for recurrence of the same diagnosis code. **<Multi-Use Tester used>** Measure item No. 26 “Linear Sol Press 1” of Service Data.
	Inspection condition		Vehicle run
	Requirements		**<Multi-Use Tester not used>** If the same diagnosis code occurs, replace electronic control unit. **<Multi-Use Tester used>** • During speed change (1st to 2nd, 3rd to 4th, 5th to 6th): Rises • During speed change (2nd to 3rd, 4th to 5th): Declines
	Inspection result (Is the judging standard satisfied?)	YES	If the diagnosis code remains after actual run, replace the electronic control unit.
		NO	Replacement of electronic control unit

[Fault code]
Diagnosis code: P0751/Flash code: 45
[Monitor ID]
52
[Fault (outline)]
Shift solenoid 1 binds in OFF state.
[Diagnosis check]
- Shift solenoid 1 is monitored for fault when switched from pressure OFF to pressure ON according to the response of oil pressure switch 3

[Code generation condition]
- Oil pressure switch 3 remains OFF (low pressure).

[Diagnosis check timing]
- Fault diagnosis is performed each time when the control is activated.

[Diagnostic requirement]
- After shift solenoid 1 switched from pressure OFF to ON

[Control effected by electronic control unit during fault]
- Lockup control is turned OFF
- Control is effected on fixed speed gear output (3rd).

[Probable cause of trouble]
- Open-circuit or short-circuit of harness between electronic control unit and shift solenoid 1 or oil pressure switch 3
- Malfunction of each connector
- Malfunction of shift solenoid 1 or oil pressure switch 3
- Malfunction of electronic control unit

[Recoverability]
- Recovered if signal becomes normal when starter switch is turned OFF to ON (power supply resumed to electronic control unit).

[Electronic Control Unit Connection Diagram]

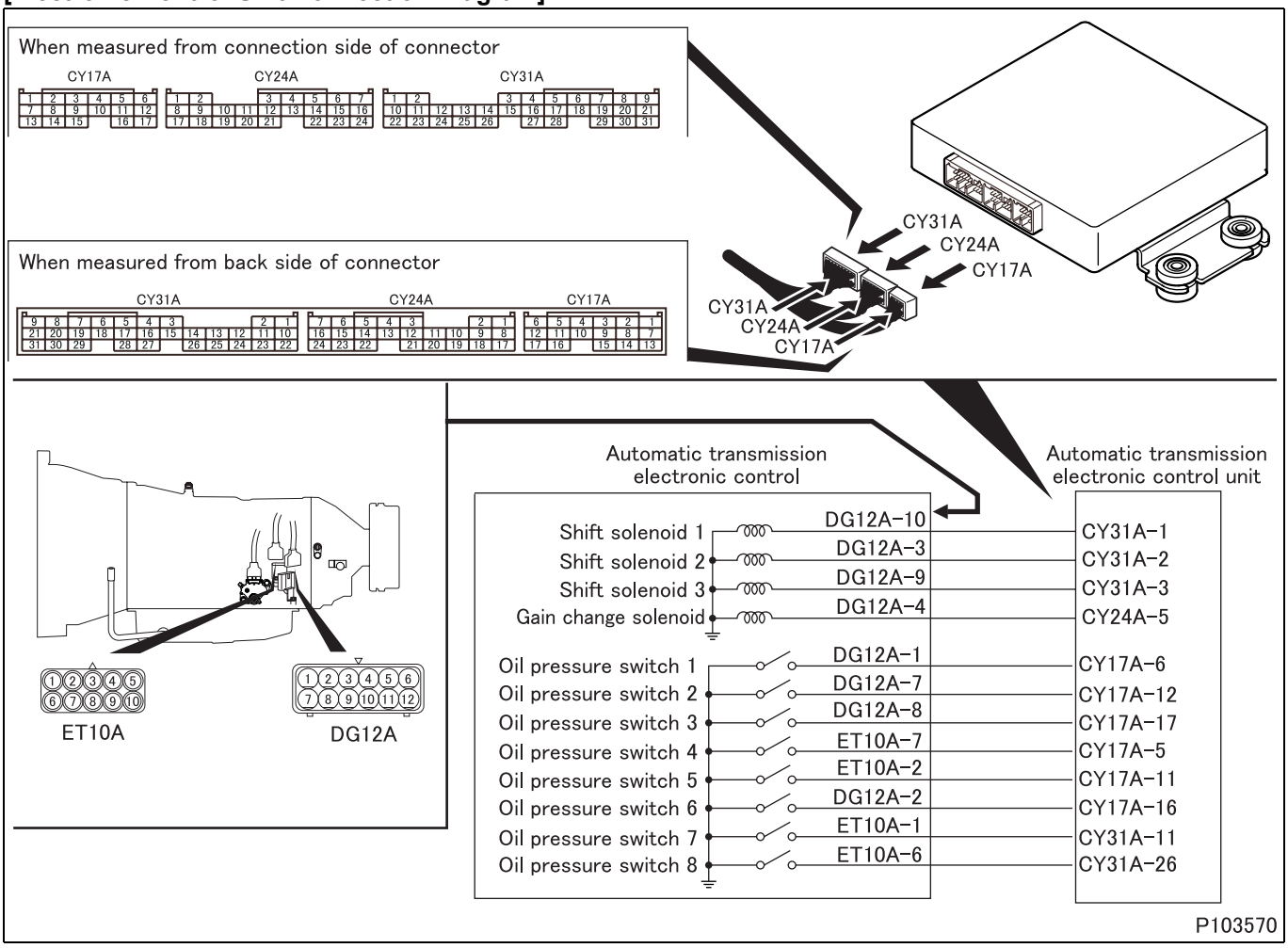

[Parts Identification and Location]

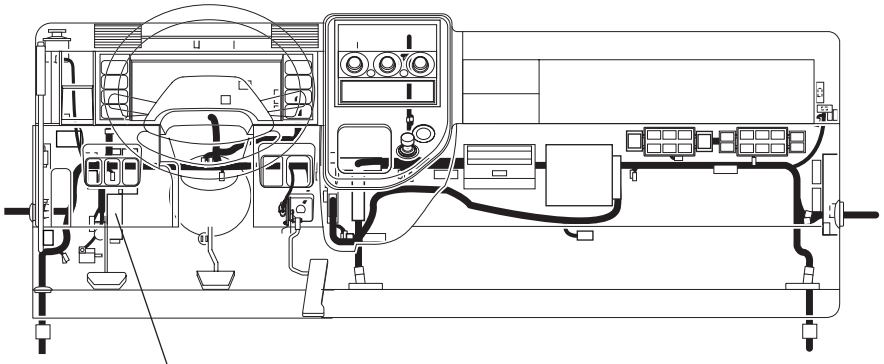

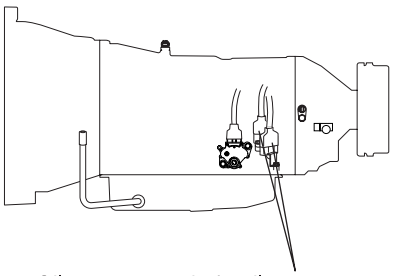

P103560-2

[Fault diagnosis]

- Perform checks in the sequence of the following steps.

Step 1	Inspection items		Inspection by control data
	Maintenance item		**<Multi-Use Tester not used>** Measure value of voltage between electronic control unit connector (CY31A) terminal No. 1 (+) and connector (CY24A) terminal No. 8 (–). **<Multi-Use Tester used>** Measure items No. 31 “Shift Valve 1” and No. 71 “Shift Valve Press 1” of Service Data.
	Inspection condition		Vehicle run **<Multi-Use Tester not used>** Measure from back side of harness connector with electronic control unit connected to harness.
	Requirements		**<Multi-Use Tester not used>** • In 3rd, 4th gears: 12 V • In any gears except above: 0 V **<Multi-Use Tester used>** <No. 31 “Shift Valve 1”> • In 3rd, 4th gears: ON • In any gears except above: OFF <No. 71 “Shift Valve Press 1”> • In 3rd, 4th gears: HIGH • In any gears except above: LOW
	Inspection result (Is the judging standard satisfied?)	YES	Go to transient fault (See Gr00.).
		NO	Go to step 2.

Step 2	Inspection items		Inspection by control data
	Maintenance item		**<Multi-Use Tester not used>** Measure value of voltage between electronic control unit connector (CY17A) terminal No. 17 (+) and connector (CY24A) terminal No. 8 (–). **<Multi-Use Tester used>** Measure item No. 63 “Oil Press SW 3” of Service Data.
	Inspection condition		Engine in operation **<Multi-Use Tester not used>** Measure from back side of harness connector with electronic control unit connected to harness.
	Requirements		**<Multi-Use Tester not used>** • In 3rd, 4th gears: 0 V • In 1st, 2nd, 5th, 6th gears: 12 V **<Multi-Use Tester used>** • In 3rd, 4th gears: ON • In 1st, 2nd, 5th, 6th gears: OFF
	Inspection result (Is the judging standard satisfied?)	YES	Go to transient fault (See Gr00.).
		NO	Go to step 3.

Step 3	Inspection items		Inspection by electronic control unit connector (signal)
	Maintenance item		Measure value of resistance between connector (CY31A) terminal No. 1 and chassis ground.
	Inspection condition		• Disconnect electronic control unit and harness, and measure from connection side of harness connector. • Starter switch: OFF
	Requirements		13 ± 2 Ω
	Inspection result (Is the judging standard satisfied?)	YES	Go to step 4.
		NO	Go to step 5.

Step 4	Inspection items		Inspection of electronic control unit connector
	Maintenance item		Inspection of connector
	Inspection condition		–
	Requirements		• Connector is properly connected. • No trace of water entry is found. • No corrosion is found in terminal. • Connection to terminal is appropriate.
	Inspection result (Is the judging standard satisfied?)	YES	Go to step 8.
		NO	Modify connector.

Step 5	Inspection items		Inspection of solenoid connector
	Maintenance item		Inspection of connector
	Inspection condition		–
	Requirements		• Connector is properly connected. • No trace of water entry is found. • No corrosion is found in terminal. • Connection to terminal is appropriate.
	Inspection result (Is the judging standard satisfied?)	YES	Go to step 6.
		NO	Modify connector.

Step 6	Inspection items		Inspection of solenoid unit
	Maintenance item		Measure value of resistance between connector (DG12A) terminal No. 10 and automatic transmission case.
	Inspection condition		• Disconnect connector, and measure solenoid side terminal. • Starter switch: OFF
	Requirements		13 ± 2 Ω
	Inspection result (Is the judging standard satisfied?)	YES	Go to step 7.
		NO	Replacement of automatic transmission

<Step 6 inspection diagram>

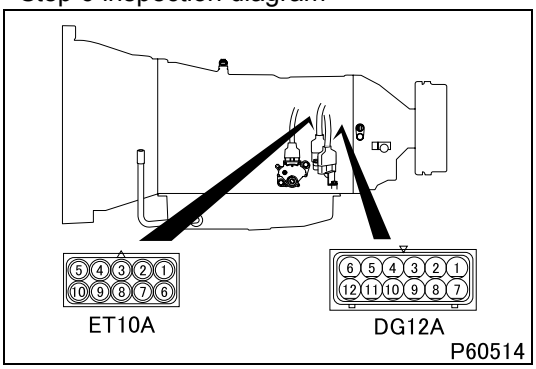

Step 7	Inspection items		Inspection of harness between solenoid and electronic control unit (power supply)
	Maintenance item		Check circuit between connector (DG12A) terminal No. 10 and electronic control unit connector (CY31A) terminal No. 1.
	Inspection condition		Disconnect each device from harness and measure from connection side of harness connector.
	Requirements		There is continuity.
	Inspection result (Is the judging standard satisfied?)	YES	Go to step 8.
		NO	Modify harness.

Step 8	Inspection items		Inspection by control data
	Maintenance item		**<Multi-Use Tester not used>** Measure value of voltage between electronic control unit connector (CY31A) terminal No. 1 (+) and connector (CY24A) terminal No. 8 (–). **<Multi-Use Tester used>** Measure items No. 31 “Shift Valve 1” and No. 71 “Shift Valve Press 1” of Service Data.
	Inspection condition		Vehicle run **<Multi-Use Tester not used>** Measure from back side of harness connector with electronic control unit connected to harness.
	Requirements		**<Multi-Use Tester not used>** • In 3rd, 4th gears: 12 V • In any gears except above: 0 V **<Multi-Use Tester used>** <No. 31 “Shift Valve 1”> • In 3rd, 4th gears: ON • In any gears except above: OFF <No. 71 “Shift Valve Press 1”> • In 3rd, 4th gears: HIGH • In any gears except above: LOW
	Inspection result (Is the judging standard satisfied?)	YES	Go to transient fault (See Gr00.).
		NO	Go to step 9.

Step 9	Inspection items		Inspection by control data
	Maintenance item		**<Multi-Use Tester not used>** Measure value of voltage between electronic control unit connector (CY17A) terminal No. 17 (+) and connector (CY24A) terminal No. 8 (–). **<Multi-Use Tester used>** Measure item No. 63 “Oil Press SW 3” of Service Data.
	Inspection condition		Engine in operation **<Multi-Use Tester not used>** Measure from back side of harness connector with electronic control unit connected to harness.
	Requirements		**<Multi-Use Tester not used>** • In 3rd, 4th gears: 0 V • In 1st, 2nd, 5th, 6th gear: 12 V **<Multi-Use Tester used>** • In 3rd, 4th gears: ON • In 1st, 2nd, 5th, 6th gear: OFF
	Inspection result (Is the judging standard satisfied?)	YES	Go to transient fault (See Gr00.).
		NO	• Check if a diagnosis code related to the oil pressure switch 3 occurs. If it does, perform troubleshooting of the code. • Replacement of electronic control unit

[Fault code]
Diagnosis code: P0752/Flash code: 45
[Monitor ID]
51
[Fault (outline)]
Shift solenoid 1 binds in ON state.
[Diagnosis check]
- Shift solenoid 1 is monitored for fault when switched from pressure ON to pressure OFF according to the response of oil pressure switch 3

[Code generation condition]
- Oil pressure switch 3 remains ON (high pressure).

[Diagnosis check timing]
- Fault diagnosis is performed each time when the control is activated.

[Diagnostic requirement]
- After shift solenoid 1 switched from pressure ON to OFF

[Control effected by electronic control unit during fault]
- Lockup control is turned OFF
- Control is effected on fixed speed gear output (3rd).

[Probable cause of trouble]
- Open-circuit or short-circuit of harness between electronic control unit and shift solenoid 1 or oil pressure switch 3
- Malfunction of each connector
- Malfunction of shift solenoid 1 or oil pressure switch 3
- Malfunction of electronic control unit

[Recoverability]
- Recovered if signal becomes normal when starter switch is turned OFF to ON (power supply resumed to electronic control unit).

[Electronic Control Unit Connection Diagram]

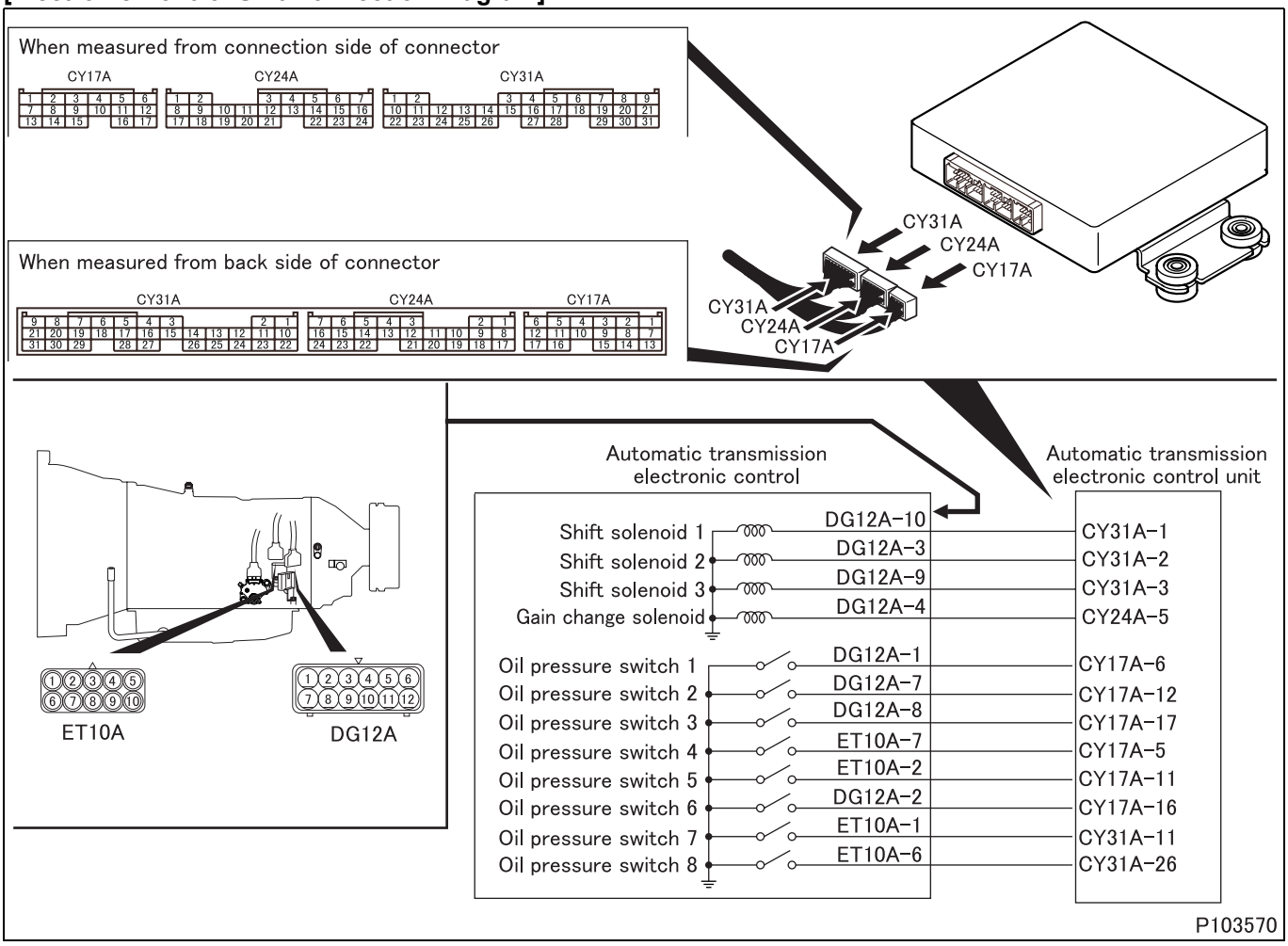

[Parts Identification and Location]

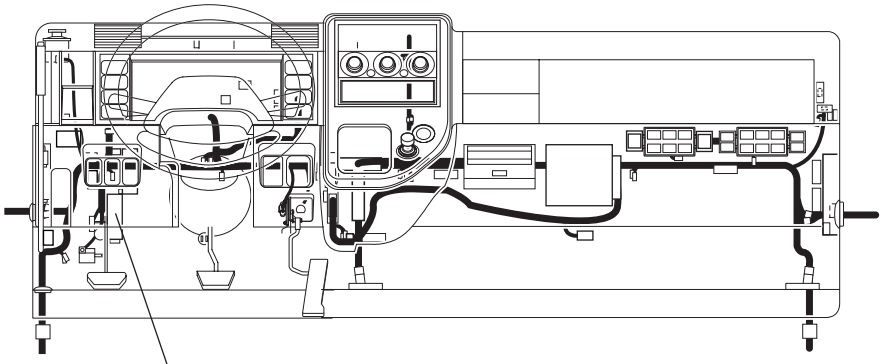

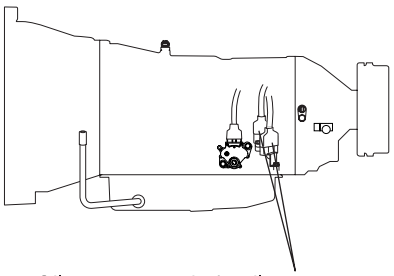

P103560-2

[Fault diagnosis]

- Perform checks in the sequence of the following steps.

Step 1	Inspection items		Inspection by control data
	Maintenance item		**<Multi-Use Tester not used>** Measure value of voltage between electronic control unit connector (CY31A) terminal No. 1 (+) and connector (CY24A) terminal No. 8 (–). **<Multi-Use Tester used>** Measure items No. 31 “Shift Valve 1” and No. 71 “Shift Valve Press 1” of Service Data.
	Inspection condition		Vehicle run **<Multi-Use Tester not used>** Measure from back side of harness connector with electronic control unit connected to harness.
	Requirements		**<Multi-Use Tester not used>** • In 3rd, 4th gears: 12 V • In any gears except above: 0 V **<Multi-Use Tester used>** <No. 31 “Shift Valve 1”> • In 3rd, 4th gears: ON • In any gears except above: OFF <No. 71 “Shift Valve Press 1”> • In 3rd, 4th gears: HIGH • In any gears except above: LOW
	Inspection result (Is the judging standard satisfied?)	YES	Go to transient fault (See Gr00.).
		NO	Go to step 2.

Step 2	Inspection items		Inspection by control data
	Maintenance item		**<Multi-Use Tester not used>** Measure value of voltage between electronic control unit connector (CY17A) terminal No. 17 (+) and connector (CY24A) terminal No. 8 (–). **<Multi-Use Tester used>** Measure item No. 63 “Oil Press SW 3” of Service Data.
	Inspection condition		Engine in operation **<Multi-Use Tester not used>** Measure from back side of harness connector with electronic control unit connected to harness.
	Requirements		**<Multi-Use Tester not used>** • In 3rd, 4th gears: 0 V • In 1st, 2nd, 5th, 6th gears: 12 V **<Multi-Use Tester used>** • In 3rd, 4th gears: ON • In 1st, 2nd, 5th, 6th gears: OFF
	Inspection result (Is the judging standard satisfied?)	YES	Go to transient fault (See Gr00.).
		NO	Go to step 3.

Step 3	Inspection items		Inspection by electronic control unit connector (signal)
	Maintenance item		Measure value of resistance between connector (CY31A) terminal No. 1 and chassis ground.
	Inspection condition		• Disconnect electronic control unit and harness, and measure from connection side of harness connector. • Starter switch: OFF
	Requirements		13 ± 2 Ω
	Inspection result (Is the judging standard satisfied?)	YES	Go to step 4.
		NO	Go to step 5.

Step 4	Inspection items		Inspection of electronic control unit connector
	Maintenance item		Inspection of connector
	Inspection condition		–
	Requirements		• Connector is properly connected. • No trace of water entry is found. • No corrosion is found in terminal. • Connection to terminal is appropriate.
	Inspection result (Is the judging standard satisfied?)	YES	Go to step 8.
		NO	Modify connector.

Step 5	Inspection items		Inspection of solenoid connector
	Maintenance item		Inspection of connector
	Inspection condition		–
	Requirements		• Connector is properly connected. • No trace of water entry is found. • No corrosion is found in terminal. • Connection to terminal is appropriate.
	Inspection result (Is the judging standard satisfied?)	YES	Go to step 6.
		NO	Modify connector.

Step 6	Inspection items		Inspection of solenoid unit
	Maintenance item		Measure value of resistance between connector (DG12A) terminal No. 10 and automatic transmission case.
	Inspection condition		• Disconnect connector, and measure solenoid side terminal. • Starter switch: OFF
	Requirements		13 ± 2 Ω
	Inspection result (Is the judging standard satisfied?)	YES	Go to step 7.
		NO	Replacement of automatic transmission

<Step 6 inspection diagram>

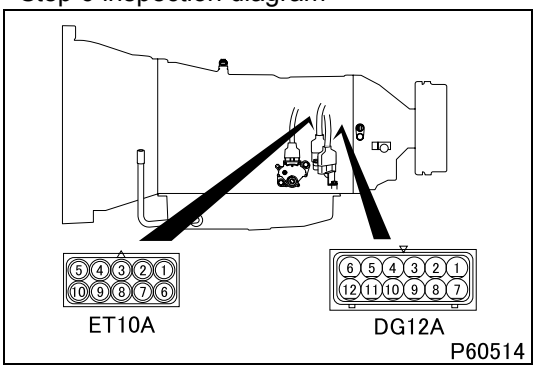

Step 7	Inspection items		Inspection of harness between solenoid and electronic control unit (power supply)
	Maintenance item		Check circuit between connector (DG12A) terminal No. 10 and electronic control unit connector (CY31A) terminal No. 1.
	Inspection condition		Disconnect each device from harness and measure from connection side of harness connector.
	Requirements		There is continuity.
	Inspection result (Is the judging standard satisfied?)	YES	Go to step 8.
		NO	Modify harness.

Step 8	Inspection items		Inspection by control data
	Maintenance item		**<Multi-Use Tester not used>** Measure value of voltage between electronic control unit connector (CY31A) terminal No.1 (+) and connector (CY24A) terminal No. 8 (–). **<Multi-Use Tester used>** Measure items No. 31 “Shift Valve 1” and No. 71 “Shift Valve Press 1” of Service Data.
	Inspection condition		Vehicle run **<Multi-Use Tester not used>** Measure from back side of harness connector with electronic control unit connected to harness.
	Requirements		**<Multi-Use Tester not used>** • In 3rd, 4th gears: 12 V • In any gears except above: 0 V **<Multi-Use Tester used>** <No. 31 “Shift Valve 1”> • In 3rd, 4th gears: ON • In any gears except above: OFF <No. 71 “Shift Valve Press 1”> • In 3rd, 4th gears: HIGH • In any gears except above: LOW
	Inspection result (Is the judging standard satisfied?)	YES	Go to transient fault (See Gr00.).
		NO	Go to step 9.

Step 9	Inspection items		Inspection by control data
	Maintenance item		**<Multi-Use Tester not used>** Measure value of voltage between electronic control unit connector (CY17A) terminal No. 17 (+) and connector (CY24A) terminal No. 8 (–). **<Multi-Use Tester used>** Measure item No. 63 “Oil Press SW 3” of Service Data.
	Inspection condition		Engine in operation **<Multi-Use Tester not used>** Measure from back side of harness connector with electronic control unit connected to harness.
	Requirements		**<Multi-Use Tester not used>** • In 3rd, 4th gears: 0 V • In 1st, 2nd, 5th, 6th gear: 12 V **<Multi-Use Tester used>** • In 3rd, 4th gears: ON • In 1st, 2nd, 5th, 6th gear: OFF
	Inspection result (Is the judging standard satisfied?)	YES	Go to transient fault (See Gr00.).
		NO	• Check if a diagnosis code related to the oil pressure switch 3 occurs. If it does, perform troubleshooting of the code. • Replacement of electronic control unit

[Fault code]
Diagnosis code: P0756/Flash code: 46
[Monitor ID]
56
[Fault (outline)]
Shift solenoid 2 binds in OFF state.
[Diagnosis check]
- Shift solenoid 2 is monitored for fault when switched from pressure OFF to pressure ON according to the response of oil pressure switch 4

[Code generation condition]
- Oil pressure switch 4 remains OFF (low pressure).

[Diagnosis check timing]
- Fault diagnosis is performed each time when the control is activated.

[Diagnostic requirement]
- After shift solenoid 2 switched from pressure OFF to ON

[Control effected by electronic control unit during fault]
- Lockup control is turned OFF
- Control is effected on fixed speed gear output (3rd).

[Probable cause of trouble]
- Open-circuit or short-circuit of harness between electronic control unit and shift solenoid 2 or oil pressure switch 4
- Malfunction of each connector
- Malfunction of shift solenoid 2 or oil pressure switch 4
- Malfunction of electronic control unit

[Recoverability]
- Recovered if signal becomes normal when starter switch is turned OFF to ON (power supply resumed to electronic control unit).

[Electronic Control Unit Connection Diagram]

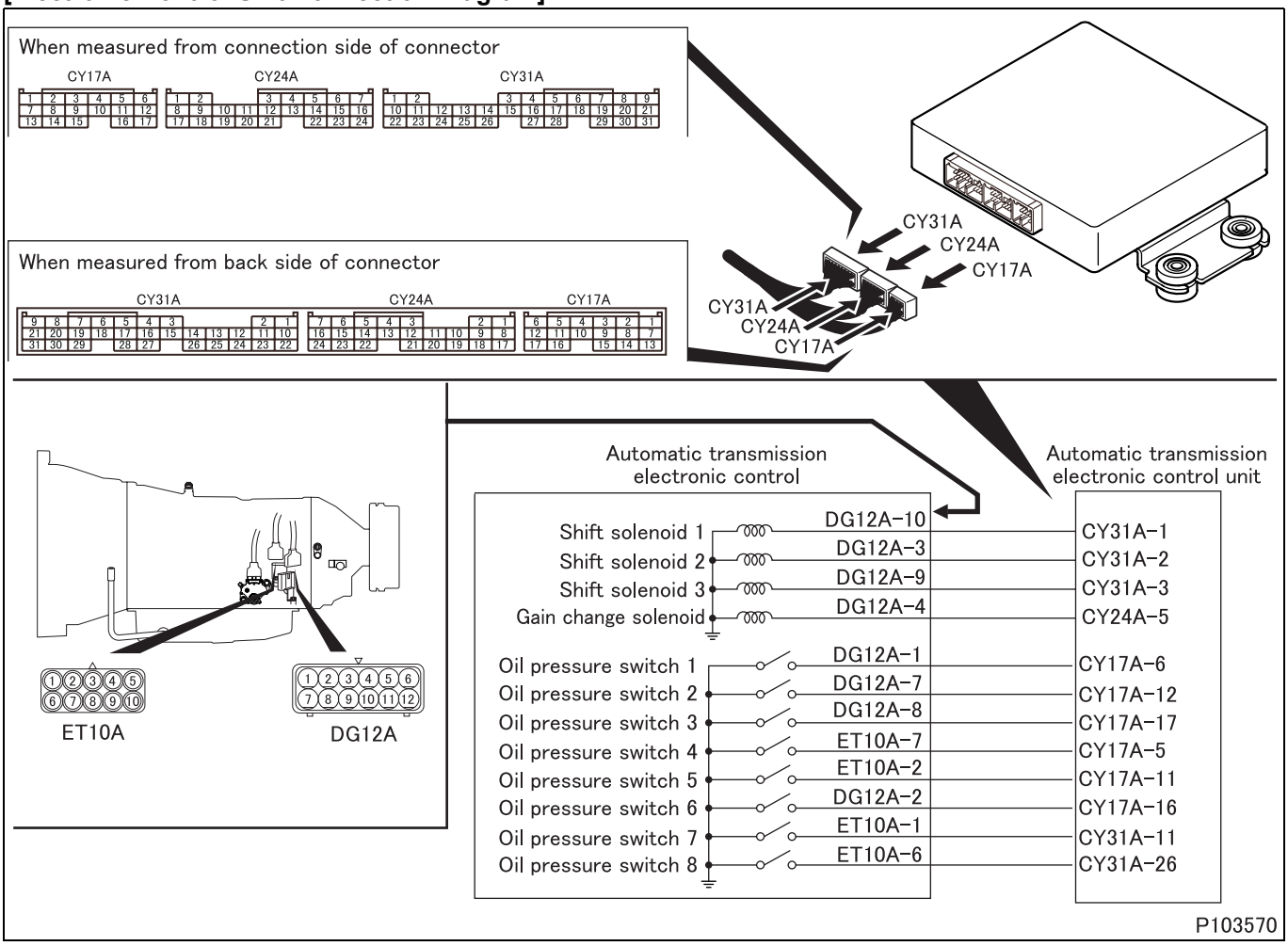

[Parts Identification and Location]

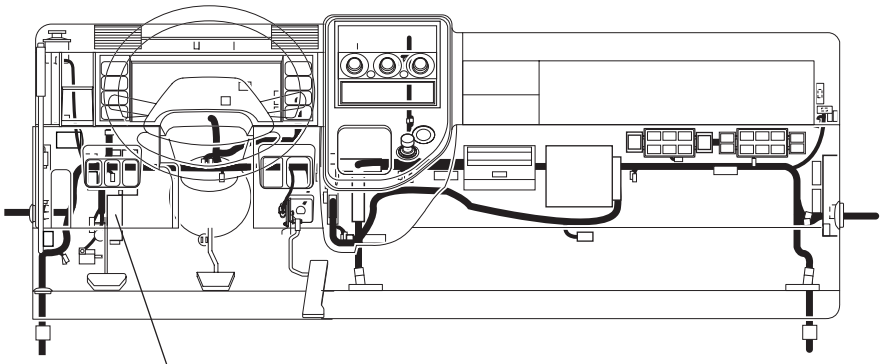

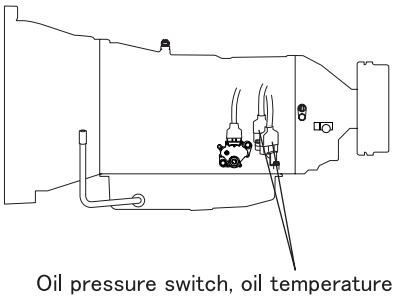

P103560-2

[Fault diagnosis]

- Perform checks in the sequence of the following steps.

Step 1	Inspection items		Inspection by control data
	Maintenance item		**<Multi-Use Tester not used>** Measure value of voltage between electronic control unit connector (CY31A) terminal No.2 (+) and connector (CY24A) terminal No. 8 (–). **<Multi-Use Tester used>** Measure items No. 32 “Shift Valve 2” and No. 72 “Shift Valve Press 2” of Service Data.
	Inspection condition		**<Multi-Use Tester not used>** Measure from back side of harness connector with electronic control unit connected to harness.
	Requirements		**<Multi-Use Tester not used>** • In 4th, 5th, and 6th gears: 12 V • In any gears except above: 0 V **<Multi-Use Tester used>** <No. 32 “Shift Valve 2”> • In 4th, 5th, and 6th gears: ON • In any gears except above: OFF <No. 72 “Shift Valve Press 2”> • In 4th, 5th, and 6th gears: HIGH • In any gears except above: LOW
	Inspection result (Is the judging standard satisfied?)	YES	Go to transient fault (See Gr00.).
		NO	Go to step 2.

Step 2	Inspection items		Inspection by control data
	Maintenance item		**<Multi-Use Tester not used>** Measure value of voltage between connector (CY17A) terminal No. 5 (+) and connector (CY24A) terminal No. 8 (–). **<Multi-Use Tester used>** Measure item No. 64 “Oil Press SW 4” of Service Data.
	Inspection condition		Engine in operation **<Multi-Use Tester not used>** Measure from back side of harness connector with electronic control unit connected to harness.
	Requirements		**<Multi-Use Tester not used>** • In 4th, 5th, 6th gears: 0 V • In 1st, 2nd, 3rd gears: 12 V **<Multi-Use Tester used>** • In 4th, 5th, 6th gears: ON • In 1st, 2nd, 3rd gears: OFF
	Inspection result (Is the judging standard satisfied?)	YES	Go to transient fault (See Gr00.).
		NO	Go to step 3.

Step 3	Inspection items		Inspection by electronic control unit connector (signal)
	Maintenance item		Measure value of resistance between connector (CY31A) terminal No. 2 and chassis ground.
	Inspection condition		• Disconnect electronic control unit and harness, and measure from connection side of harness connector. • Starter switch: OFF
	Requirements		13 ± 2 Ω
	Inspection result (Is the judging standard satisfied?)	YES	Go to step 4.
		NO	Go to step 5.

Step 4	Inspection items		Inspection of electronic control unit connector
	Maintenance item		Inspection of connector
	Inspection condition		–
	Requirements		• Connector is properly connected. • No trace of water entry is found. • No corrosion is found in terminal. • Connection to terminal is appropriate.
	Inspection result (Is the judging standard satisfied?)	YES	Go to step 8.
		NO	Modify connector.

Step 5	Inspection items		Inspection of solenoid connector
	Maintenance item		Inspection of connector
	Inspection condition		–
	Requirements		• Connector is properly connected. • No trace of water entry is found. • No corrosion is found in terminal. • Connection to terminal is appropriate.
	Inspection result (Is the judging standard satisfied?)	YES	Go to step 6.
		NO	Modify connector.

Step 6	Inspection items		Inspection of solenoid unit
	Maintenance item		Measure value of resistance between connector (DG12A) terminal No. 3 and automatic transmission case.
	Inspection condition		• Disconnect connector, and measure solenoid side terminal. • Starter switch: OFF
	Requirements		13 ± 2 Ω
	Inspection result (Is the judging standard satisfied?)	YES	Go to step 7.
		NO	Replacement of automatic transmission

<Step 6 inspection diagram>

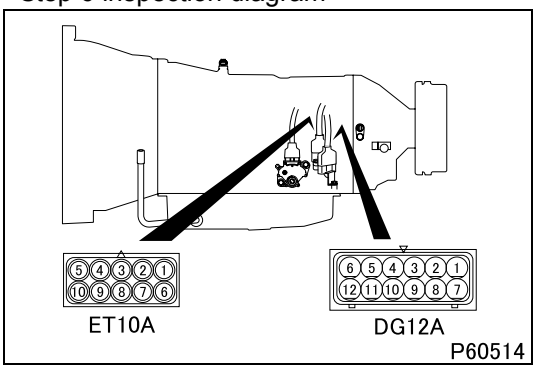

Step 7	Inspection items		Inspection of harness between solenoid and electronic control unit (power supply)
	Maintenance item		Check circuit between connector (DG12A) terminal No. 3 and electronic control unit connector (CY31A) terminal No. 2.
	Inspection condition		Disconnect each device from harness and measure from connection side of harness connector.
	Requirements		There is continuity.
	Inspection result (Is the judging standard satisfied?)	YES	Go to step 8.
		NO	Modify harness.

Step 8	Inspection items		Inspection by control data
	Maintenance item		**<Multi-Use Tester not used>** Measure value of voltage between electronic control unit connector (CY31A) terminal No.1 (+) and connector (CY24A) terminal No. 8 (–). **<Multi-Use Tester used>** Measure items No. 32 “Shift Valve 2” and No. 72 “Shift Valve Press 2” of Service Data.
	Inspection condition		**<Multi-Use Tester not used>** Measure from back side of harness connector with electronic control unit connected to harness.
	Requirements		**<Multi-Use Tester not used>** • In 4th, 5th, and 6th gears: 12 V • In any gears except above: 0 V **<Multi-Use Tester used>** <No. 32 “Shift Valve 2”> • In 4th, 5th, and 6th gears: ON • In any gears except above: OFF <No. 72 “Shift Valve Press 2”> • In 4th, 5th, and 6th gears: HIGH • In any gears except above: LOW
	Inspection result (Is the judging standard satisfied?)	YES	Go to transient fault (See Gr00.).
		NO	Go to step 9.

Step 9	Inspection items		Inspection by control data
	Maintenance item		**<Multi-Use Tester not used>** Measure value of voltage between connector (CY17A) terminal No. 5 (+) and connector (CY24A) terminal No. 8 (–). **<Multi-Use Tester used>** Measure item No. 64 “Oil Press SW 4” of Service Data.
	Inspection condition		Engine in operation **<Multi-Use Tester not used>** Measure from back side of harness connector with electronic control unit connected to harness.
	Requirements		**<Multi-Use Tester not used>** • In 4th, 5th, 6th gears: 0 V • In 1st, 2nd, 3rd gears: 12 V **<Multi-Use Tester used>** • In 4th, 5th, 6th gears: ON • In 1st, 2nd, 3rd gears: OFF
	Inspection result (Is the judging standard satisfied?)	YES	Go to transient fault (See Gr00.).
		NO	• Check if a diagnosis code related to the oil pressure switch 4 occurs. If it does, perform troubleshooting of the code. • Replacement of electronic control unit

[Fault code]
Diagnosis code: P0757/Flash code: 46
[Monitor ID]
55
[Fault (outline)]
Shift solenoid 2 binds in ON state.
[Diagnosis check]
- Shift solenoid 2 is monitored for fault when switched from pressure ON to pressure OFF according to the response of oil pressure switch 4

[Code generation condition]
- Oil pressure switch 4 remains ON (high pressure).

[Diagnosis check timing]
- Fault diagnosis is performed each time when the control is activated.

[Diagnostic requirement]
- After shift solenoid 2 switched from pressure ON to OFF

[Control effected by electronic control unit during fault]
- Lockup control is turned OFF
- Control is effected on fixed speed gear output (5th).

[Probable cause of trouble]
- Open-circuit or short-circuit of harness between electronic control unit and shift solenoid 2 or oil pressure switch 4
- Malfunction of each connector
- Malfunction of shift solenoid 2 or oil pressure switch 4
- Malfunction of electronic control unit

[Recoverability]
- Recovered if signal becomes normal when starter switch is turned OFF to ON (power supply resumed to electronic control unit).

[Electronic Control Unit Connection Diagram]

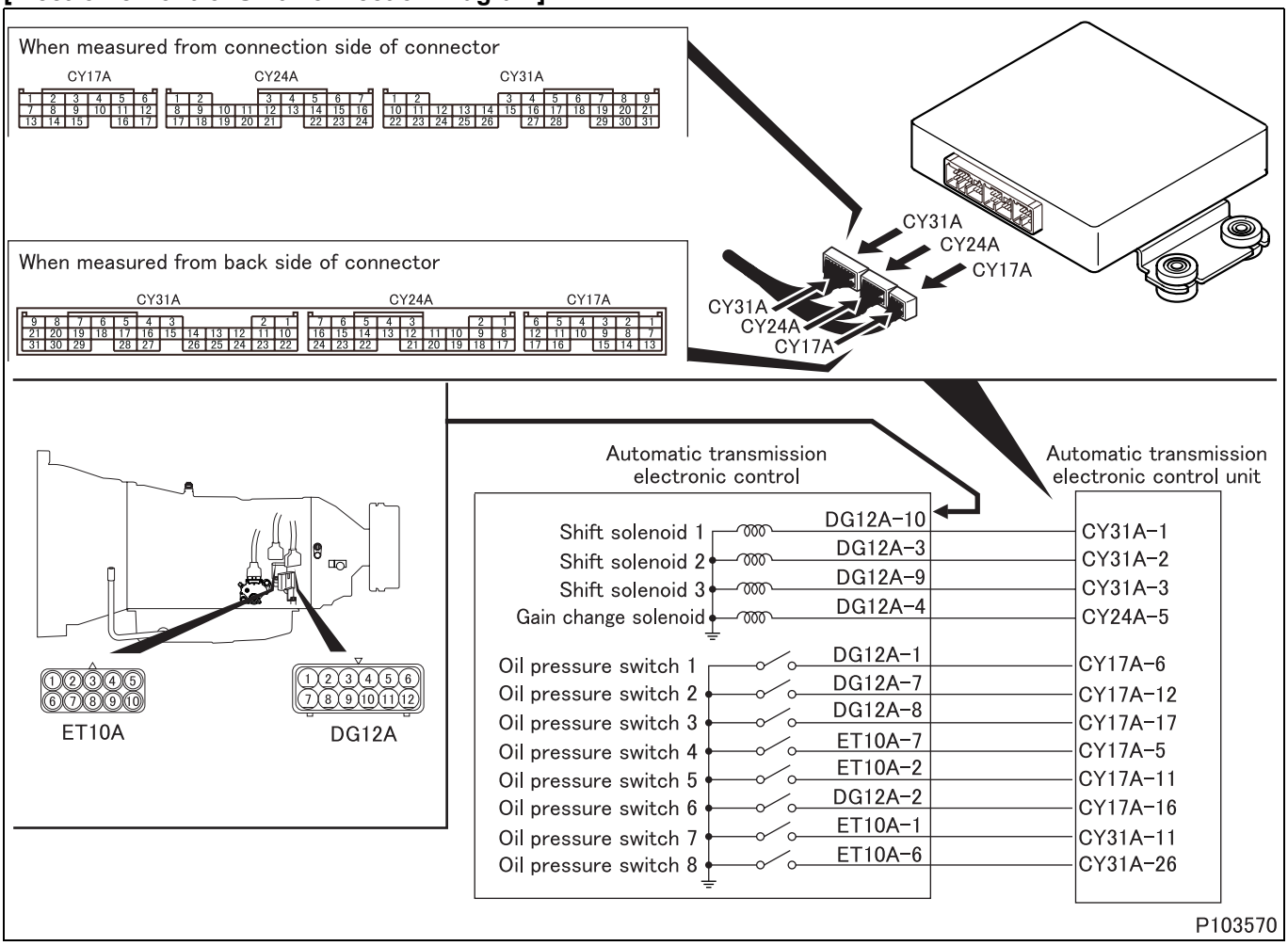

[Parts Identification and Location]

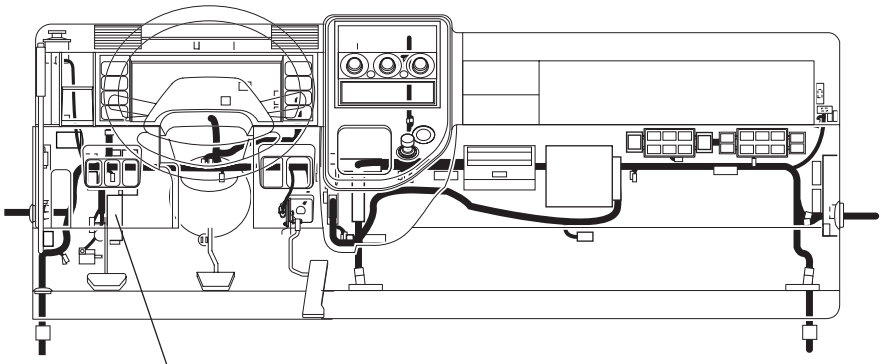

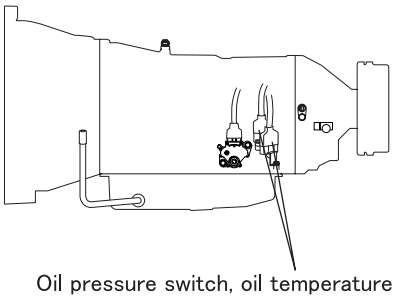

P103560-2

[Fault diagnosis]

- Perform checks in the sequence of the following steps.

Step 1	Inspection items		Inspection by control data
	Maintenance item		**<Multi-Use Tester not used>** Measure value of voltage between electronic control unit connector (CY31A) terminal No. 2 (+) and connector (CY24A) terminal No. 8 (–). **<Multi-Use Tester used>** Measure items No. 32 “Shift Valve 2” and No. 72 “Shift Valve Press 2” of Service Data.
	Inspection condition		**<Multi-Use Tester not used>** Measure from back side of harness connector with electronic control unit connected to harness.
	Requirements		**<Multi-Use Tester not used>** • In 4th, 5th, and 6th gears: 12 V • In any gears except above: 0 V **<Multi-Use Tester used>** <No. 32 “Shift Valve 2”> • In 4th, 5th, and 6th gears: ON • In any gears except above: OFF <No. 72 “Shift Valve Press 2”> • In 4th, 5th, and 6th gears: HIGH • In any gears except above: LOW
	Inspection result (Is the judging standard satisfied?)	YES	Go to transient fault (See Gr00.).
		NO	Go to step 2.

Step 2	Inspection items		Inspection by control data
	Maintenance item		**<Multi-Use Tester not used>** Measure value of voltage between connector (CY17A) terminal No. 5 (+) and connector (CY24A) terminal No. 8 (–). **<Multi-Use Tester used>** Measure item No. 64 “Oil Press SW 4” of Service Data.
	Inspection condition		Engine in operation **<Multi-Use Tester not used>** Measure from back side of harness connector with electronic control unit connected to harness.
	Requirements		**<Multi-Use Tester not used>** • In 4th, 5th, 6th gears: 0 V • In 1st, 2nd, 3rd gears: 12 V **<Multi-Use Tester used>** • In 4th, 5th, 6th gears: ON • In 1st, 2nd, 3rd gears: OFF
	Inspection result (Is the judging standard satisfied?)	YES	Go to transient fault (See Gr00.).
		NO	Go to step 3.

Step 3	Inspection items		Inspection by electronic control unit connector (signal)
	Maintenance item		Measure value of resistance between connector (CY31A) terminal No. 2 and chassis ground.
	Inspection condition		• Disconnect electronic control unit and harness, and measure from connection side of harness connector. • Starter switch: OFF
	Requirements		13 ± 2 Ω
	Inspection result (Is the judging standard satisfied?)	YES	Go to step 4.
		NO	Go to step 5.

Step 4	Inspection items		Inspection of electronic control unit connector
	Maintenance item		Inspection of connector
	Inspection condition		–
	Requirements		• Connector is properly connected. • No trace of water entry is found. • No corrosion is found in terminal. • Connection to terminal is appropriate.
	Inspection result (Is the judging standard satisfied?)	YES	Go to step 8.
		NO	Modify connector.

Step 5	Inspection items		Inspection of solenoid connector
	Maintenance item		Inspection of connector
	Inspection condition		–
	Requirements		• Connector is properly connected. • No trace of water entry is found. • No corrosion is found in terminal. • Connection to terminal is appropriate.
	Inspection result (Is the judging standard satisfied?)	YES	Go to step 6.
		NO	Modify connector.

Step 6	Inspection items		Inspection of solenoid unit
	Maintenance item		Measure value of resistance between connector (DG12A) terminal No. 3 and automatic transmission case.
	Inspection condition		• Disconnect connector, and measure solenoid side terminal. • Starter switch: OFF
	Requirements		13 ± 2 Ω
	Inspection result (Is the judging standard satisfied?)	YES	Go to step 7.
		NO	Replacement of automatic transmission

<Step 6 inspection diagram>

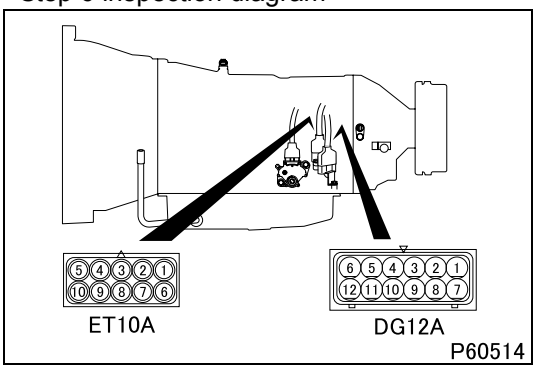

Step 7	Inspection items		Inspection of harness between solenoid and electronic control unit (power supply)
	Maintenance item		Check circuit between connector (DG12A) terminal No. 3 and electronic control unit connector (CY31A) terminal No. 2.
	Inspection condition		Disconnect each device from harness and measure from connection side of harness connector.
	Requirements		There is continuity.
	Inspection result (Is the judging standard satisfied?)	YES	Go to step 8.
		NO	Modify harness.

Step 8	Inspection items		Inspection by control data
	Maintenance item		**<Multi-Use Tester not used>** Measure value of voltage between electronic control unit connector (CY31A) terminal No.1 (+) and connector (CY24A) terminal No. 8 (–). **<Multi-Use Tester used>** Measure items No. 32 “Shift Valve 2” and No. 72 “Shift Valve Press 2” of Service Data.
	Inspection condition		**<Multi-Use Tester not used>** Measure from back side of harness connector with electronic control unit connected to harness.
	Requirements		**<Multi-Use Tester not used>** • In 4th, 5th, and 6th gears: 12 V • In any gears except above: 0 V **<Multi-Use Tester used>** <No. 32 “Shift Valve 2”> • In 4th, 5th, and 6th gears: ON • In any gears except above: OFF <No. 72 “Shift Valve Press 2”> • In 4th, 5th, and 6th gears: HIGH • In any gears except above: LOW
	Inspection result (Is the judging standard satisfied?)	YES	Go to transient fault (See Gr00.).
		NO	Go to step 9.

Step 9	Inspection items		Inspection by control data
	Maintenance item		**<Multi-Use Tester not used>** Measure value of voltage between connector (CY17A) terminal No. 5 (+) and connector (CY24A) terminal No. 8 (–). **<Multi-Use Tester used>** Measure item No. 64 “Oil Press SW 4” of Service Data.
	Inspection condition		Engine in operation **<Multi-Use Tester not used>** Measure from back side of harness connector with electronic control unit connected to harness.
	Requirements		**<Multi-Use Tester not used>** • In 4th, 5th, 6th gears: 0 V • In 1st, 2nd, 3rd gears: 12 V **<Multi-Use Tester used>** • In 4th, 5th, 6th gears: ON • In 1st, 2nd, 3rd gears: OFF
	Inspection result (Is the judging standard satisfied?)	YES	Go to transient fault (See Gr00.).
		NO	• Check if a diagnosis code related to the oil pressure switch 4 occurs. If it does, perform troubleshooting of the code. • Replacement of electronic control unit

[Fault code]
Diagnosis code: P0761/Flash code: 47
[Monitor ID]
60
[Fault (outline)]
Shift solenoid 3 binds in OFF state.
[Diagnosis check]
- Shift solenoid 3 (shift solenoid valve 3) is monitored for fault when switched from pressure OFF to pressure ON according to the response of oil pressure switch 5

[Code generation condition]
- Oil pressure switch 5 remains OFF.

[Diagnosis check timing]
- Fault diagnosis is performed each time when the control is activated.

[Diagnostic requirement]
- After shift solenoid 3 (shift solenoid valve 3) switched from pressure OFF to ON

[Control effected by electronic control unit during fault]
- Lockup control is turned OFF
- Control is effected on fixed speed gear output (2nd).

[Probable cause of trouble]
- Open-circuit or short-circuit of harness between electronic control unit and shift solenoid 3 or oil pressure switch 5
- Malfunction of each connector
- Malfunction of shift solenoid 3 or oil pressure switch 5
- Malfunction of electronic control unit

[Recoverability]
- Recovered if signal becomes normal when starter switch is turned OFF to ON (power supply resumed to electronic control unit).

[Electronic Control Unit Connection Diagram]

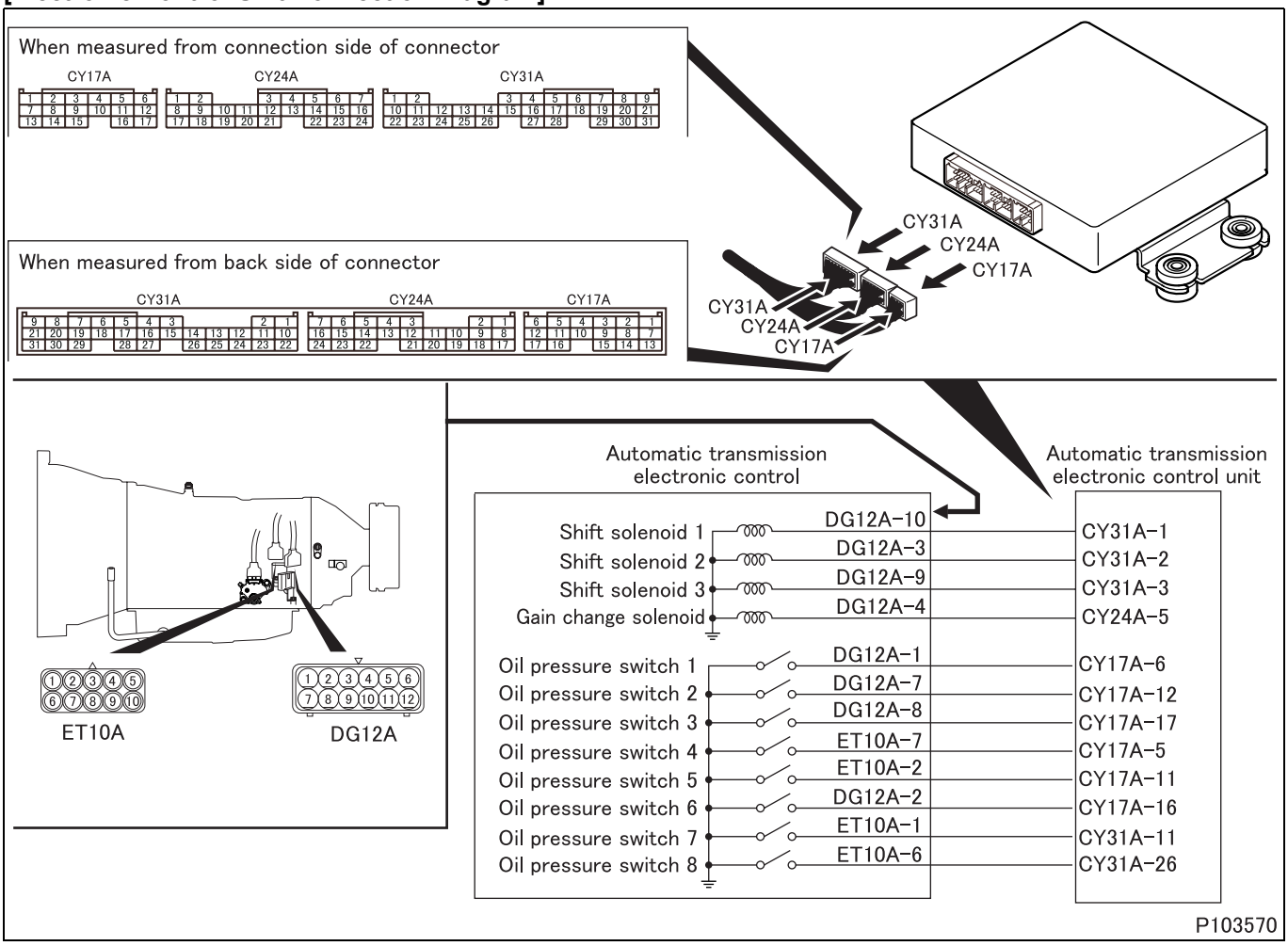

[Parts Identification and Location]

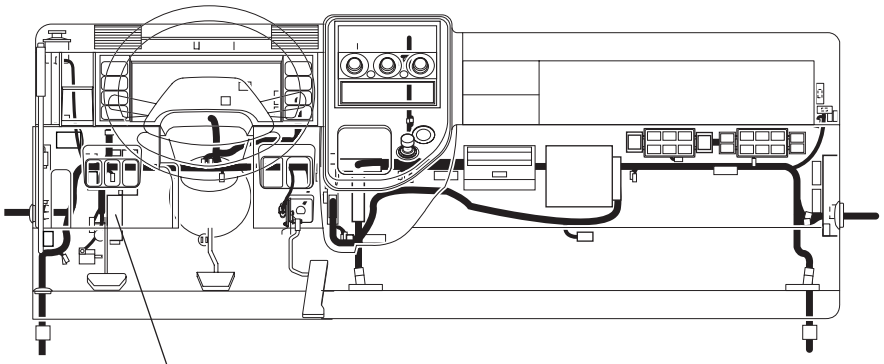

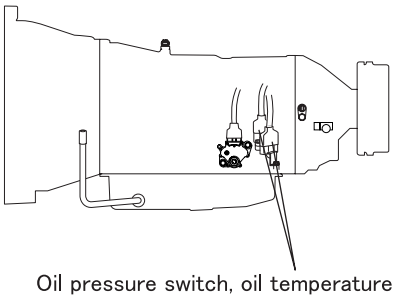

P103560-2

[Fault diagnosis]

- Perform checks in the sequence of the following steps.

Step 1	Inspection items		Inspection by control data
	Maintenance item		**<Multi-Use Tester not used>** Measure value of voltage between connector (CY31A) terminal No. 3 (+) and connector (CY24A) terminal No. 8 (–). **<Multi-Use Tester used>** Measure items No. 33 “Shift Valve 3” and No. 73 “Shift Valve Press 3” of Service Data.
	Inspection condition		**<Multi-Use Tester not used>** Measure from back side of harness connector with electronic control unit connected to harness.
	Requirements		**<Multi-Use Tester not used>** • In 1st gear: 12 V • In any gears except above: 0 V **<Multi-Use Tester used>** <No. 33 “Shift Valve 3”> • In 1st gear: ON • In any gears except above: OFF <No. 73 “Shift Valve Press 3”> • In 1st gear: HIGH • In any gears except above: LOW
	Inspection result (Is the judging standard satisfied?)	YES	Go to transient fault (See Gr00.).
		NO	Go to step 2.

Step 2	Inspection items		Inspection by control data
	Maintenance item		**<Multi-Use Tester not used>** Measure value of voltage between connector (CY17A) terminal No. 11 (+) and connector (CY24A) terminal No. 8 (–). **<Multi-Use Tester used>** Measure item No. 65 “Oil Press SW 5” of Service Data.
	Inspection condition		Engine in operation **<Multi-Use Tester not used>** Measure from back side of harness connector with electronic control unit connected to harness.
	Requirements		**<Multi-Use Tester not used>** • In 1st gear: 0 V • In 2nd, 3rd, 4th, 5th, 6th gears: 12 V **<Multi-Use Tester used>** • In 1st gear: ON • In 2nd, 3rd, 4th, 5th, 6th gears: OFF
	Inspection result (Is the judging standard satisfied?)	YES	Go to transient fault (See Gr00.).
		NO	Go to step 3.

Step 3	Inspection items		Inspection by electronic control unit connector (signal)
	Maintenance item		Measure value of resistance between connector (CY31A) terminal No. 3 and chassis ground.
	Inspection condition		• Disconnect electronic control unit and harness, and measure from connection side of harness connector. • Starter switch: OFF
	Requirements		13 ± 2 Ω
	Inspection result (Is the judging standard satisfied?)	YES	Go to step 4.
		NO	Go to step 5.

Step 4	Inspection items		Inspection of electronic control unit connector
	Maintenance item		Inspection of connector
	Inspection condition		–
	Requirements		• Connector is properly connected. • No trace of water entry is found. • No corrosion is found in terminal. • Connection to terminal is appropriate.
	Inspection result (Is the judging standard satisfied?)	YES	Go to step 8.
		NO	Modify connector.

Step 5	Inspection items		Inspection of solenoid connector
	Maintenance item		Inspection of connector
	Inspection condition		–
	Requirements		• Connector is properly connected. • No trace of water entry is found. • No corrosion is found in terminal. • Connection to terminal is appropriate.
	Inspection result (Is the judging standard satisfied?)	YES	Go to step 6.
		NO	Modify connector.

Step 6	Inspection items		Inspection of solenoid unit
	Maintenance item		Measure value of resistance between connector (DG12A) terminal No. 9 and automatic transmission case.
	Inspection condition		• Disconnect connector, and measure solenoid side terminal. • Starter switch: OFF
	Requirements		13 ± 2 Ω
	Inspection result (Is the judging standard satisfied?)	YES	Go to step 7.
		NO	Replacement of automatic transmission

<Step 6 inspection diagram>

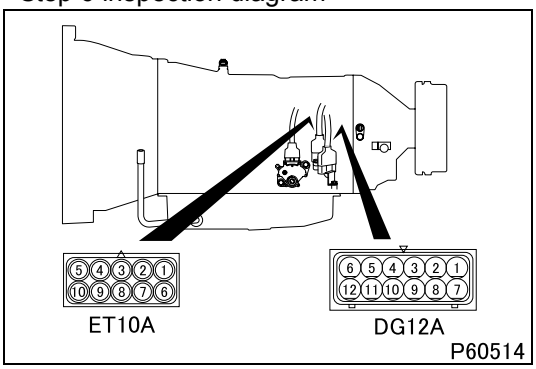

Step 7	Inspection items		Inspection of harness between solenoid and electronic control unit (power supply)
	Maintenance item		Check circuit between connector (DG12A) terminal No. 9 and electronic control unit connector (CY31A) terminal No. 3.
	Inspection condition		Disconnect each device from harness and measure from connection side of harness connector.
	Requirements		There is continuity.
	Inspection result (Is the judging standard satisfied?)	YES	Go to step 8.
		NO	Modify harness.

Step 8	Inspection items		Inspection by control data
	Maintenance item		**<Multi-Use Tester not used>** Measure value of voltage between connector (CY31A) terminal No. 3 (+) and connector (CY24A) terminal No. 8 (–). **<Multi-Use Tester used>** Measure items No. 33 “Shift Valve 3” and No. 73 “Shift Valve Press 3” of Service Data.
	Inspection condition		**<Multi-Use Tester not used>** Measure from back side of harness connector with electronic control unit connected to harness.
	Requirements		**<Multi-Use Tester not used>** • In 1st gear: 12 V • In any gears except above: 0 V **<Multi-Use Tester used>** <No. 33 “Shift Valve 3”> • In 1st gear: ON • In any gears except above: OFF <No. 73 “Shift Valve Press 3”> • In 1st gear: HIGH • In any gears except above: LOW
	Inspection result (Is the judging standard satisfied?)	YES	Go to transient fault (See Gr00.).
		NO	Go to step 9.

Step 9	Inspection items		Inspection by control data
	Maintenance item		**<Multi-Use Tester not used>** Measure value of voltage between connector (CY17A) terminal No. 11 (+) and connector (CY24A) terminal No. 8 (–). **<Multi-Use Tester used>** Measure item No. 65 “Oil Press SW 5” of Service Data.
	Inspection condition		Engine in operation **<Multi-Use Tester not used>** Measure from back side of harness connector with electronic control unit connected to harness.
	Requirements		**<Multi-Use Tester not used>** • In 1st gear: 0 V • In 2nd, 3rd, 4th, 5th, 6th gears: 12 V **<Multi-Use Tester used>** • In 1st gear: ON • In 2nd, 3rd, 4th, 5th, 6th gears: OFF
	Inspection result (Is the judging standard satisfied?)	YES	Go to transient fault (See Gr00.).
		NO	• Check if a diagnosis code related to the oil pressure switch 5 occurs. If it does, perform troubleshooting of the code. • Replacement of electronic control unit

[Fault code]
Diagnosis code: P0762/Flash code: 47
[Monitor ID]
59
[Fault (outline)]
Shift solenoid 3 binds in ON state.
[Diagnosis check]
- Shift solenoid 3 (shift solenoid valve 3) is monitored for fault when switched from pressure ON to pressure OFF according to the response of oil pressure switch 5

[Code generation condition]
- Oil pressure switch 5 remains ON (high pressure).

[Diagnosis check timing]
- Fault diagnosis is performed each time when the control is activated.

[Diagnostic requirement]
- After shift solenoid 3 (shift solenoid valve 3) switched from pressure ON to OFF

[Control effected by electronic control unit during fault]
- Lockup control is turned OFF
- Control is effected on fixed speed gear output (2nd).

[Probable cause of trouble]
- Open-circuit or short-circuit of harness between electronic control unit and shift solenoid 3 or oil pressure switch 5
- Malfunction of each connector
- Malfunction of shift solenoid 3 or oil pressure switch 5
- Malfunction of electronic control unit

[Recoverability]
- Recovered if signal becomes normal when starter switch is turned OFF to ON (power supply resumed to electronic control unit).

[Electronic Control Unit Connection Diagram]

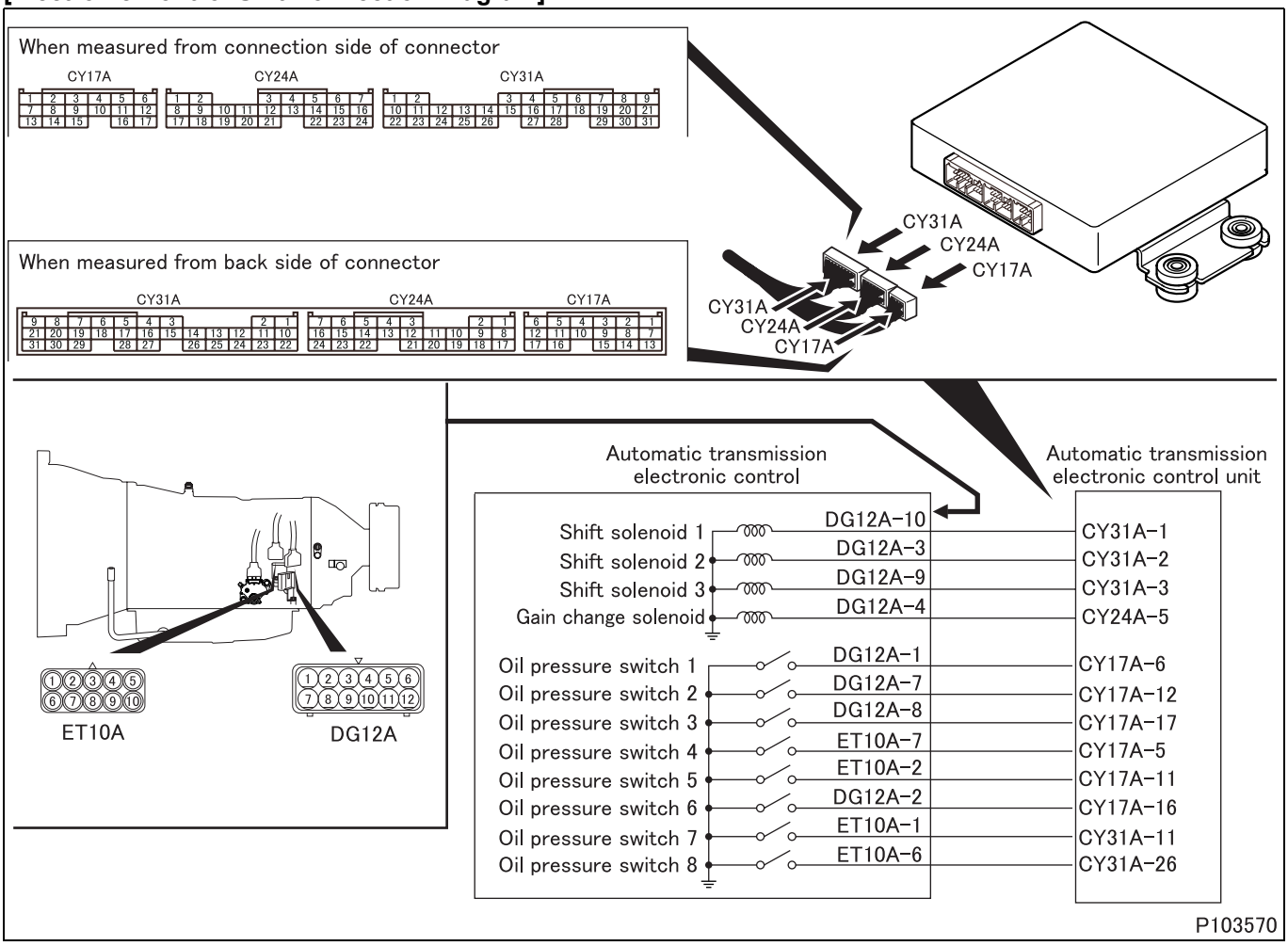

[Parts Identification and Location]

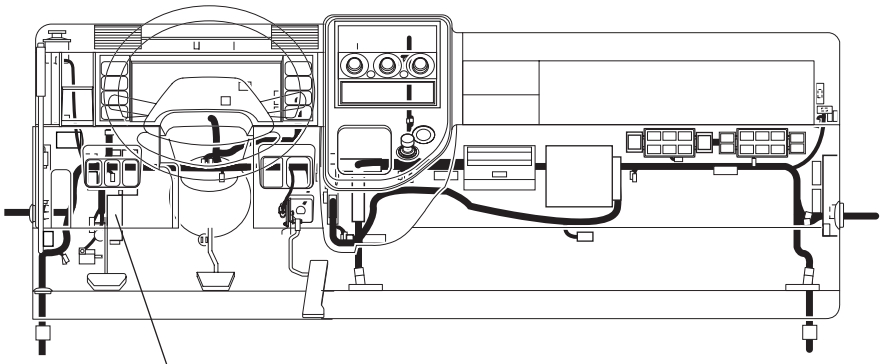

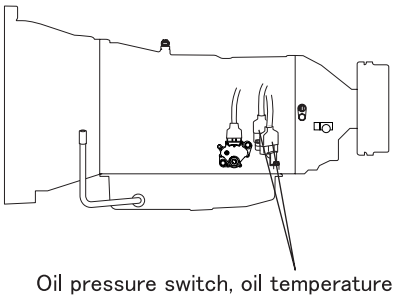

P103560-2

[Fault diagnosis]

- Perform checks in the sequence of the following steps.

Step 1	Inspection items		Inspection by control data
	Maintenance item		**<Multi-Use Tester not used>** Measure value of voltage between connector (CY31A) terminal No. 3 (+) and connector (CY24A) terminal No. 8 (–). **<Multi-Use Tester used>** Measure items No. 33 “Shift Valve 3” and No. 73 “Shift Valve Press 3” of Service Data.
	Inspection condition		**<Multi-Use Tester not used>** Measure from back side of harness connector with electronic control unit connected to harness.
	Requirements		**<Multi-Use Tester not used>** • In 1st gear: 12 V • In any gears except above: 0 V **<Multi-Use Tester used>** <No. 33 “Shift Valve 3”> • In 1st gear: ON • In any gears except above: OFF <No. 73 “Shift Valve Press 3”> • In 1st gear: HIGH • In any gears except above: LOW
	Inspection result (Is the judging standard satisfied?)	YES	Go to transient fault (See Gr00.).
		NO	Go to step 2.

Step 2	Inspection items		Inspection by control data
	Maintenance item		**<Multi-Use Tester not used>** Measure value of voltage between connector (CY17A) terminal No. 11 (+) and connector (CY24A) terminal No. 8 (–). **<Multi-Use Tester used>** Measure item No. 65 “Oil Press SW 5” of Service Data.
	Inspection condition		Engine in operation **<Multi-Use Tester not used>** Measure from back side of harness connector with electronic control unit connected to harness.
	Requirements		**<Multi-Use Tester not used>** • In 1st gear: 0 V • In 2nd, 3rd, 4th, 5th, 6th gears: 12 V **<Multi-Use Tester used>** • In 1st gear: ON • In 2nd, 3rd, 4th, 5th, 6th gears: OFF
	Inspection result (Is the judging standard satisfied?)	YES	Go to transient fault (See Gr00.).
		NO	Go to step 3.

Step 3	Inspection items		Inspection by electronic control unit connector (signal)
	Maintenance item		Measure value of resistance between connector (CY31A) terminal No. 3 and chassis ground.
	Inspection condition		• Disconnect electronic control unit and harness, and measure from connection side of harness connector. • Starter switch: OFF
	Requirements		13 ± 2 Ω
	Inspection result (Is the judging standard satisfied?)	YES	Go to step 4.
		NO	Go to step 5.

Step 4	Inspection items		Inspection of electronic control unit connector
	Maintenance item		Inspection of connector
	Inspection condition		–
	Requirements		• Connector is properly connected. • No trace of water entry is found. • No corrosion is found in terminal. • Connection to terminal is appropriate.
	Inspection result (Is the judging standard satisfied?)	YES	Go to step 8.
		NO	Modify connector.

Step 5	Inspection items		Inspection of solenoid connector
	Maintenance item		Inspection of connector
	Inspection condition		–
	Requirements		• Connector is properly connected. • No trace of water entry is found. • No corrosion is found in terminal. • Connection to terminal is appropriate.
	Inspection result (Is the judging standard satisfied?)	YES	Go to step 6.
		NO	Modify connector.

Step 6	Inspection items		Inspection of solenoid unit
	Maintenance item		Measure value of resistance between connector (DG12A) terminal No. 9 and automatic transmission case.
	Inspection condition		• Disconnect connector, and measure solenoid side terminal. • Starter switch: OFF
	Requirements		13 ± 2 Ω
	Inspection result (Is the judging standard satisfied?)	YES	Go to step 7.
		NO	Replacement of automatic transmission

<Step 6 inspection diagram>

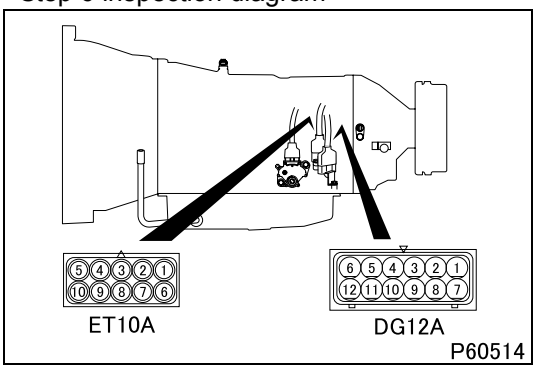

Step 7	Inspection items		Inspection of harness between solenoid and electronic control unit (power supply)
	Maintenance item		Check circuit between connector (DG12A) terminal No. 9 and electronic control unit connector (CY31A) terminal No. 3.
	Inspection condition		Disconnect each device from harness and measure from connection side of harness connector.
	Requirements		There is continuity.
	Inspection result (Is the judging standard satisfied?)	YES	Go to step 8.
		NO	Modify harness.

Step 8	Inspection items		Inspection by control data
	Maintenance item		**<Multi-Use Tester not used>** Measure value of voltage between connector (CY31A) terminal No. 3 (+) and connector (CY24A) terminal No. 8 (–). **<Multi-Use Tester used>** Measure items No. 33 “Shift Valve 3” and No. 73 “Shift Valve Press 3” of Service Data.
	Inspection condition		**<Multi-Use Tester not used>** Measure from back side of harness connector with electronic control unit connected to harness.
	Requirements		**<Multi-Use Tester not used>** • In 1st gear: 12 V • In any gears except above: 0 V **<Multi-Use Tester used>** <No. 33 “Shift Valve 3”> • In 1st gear: ON • In any gears except above: OFF <No. 73 “Shift Valve Press 3”> • In 1st gear: HIGH • In any gears except above: LOW
	Inspection result (Is the judging standard satisfied?)	YES	Go to transient fault (See Gr00.).
		NO	Go to step 9.

Step 9	Inspection items		Inspection by control data
	Maintenance item		**<Multi-Use Tester not used>** Measure value of voltage between connector (CY17A) terminal No. 11 (+) and connector (CY24A) terminal No. 8 (–). **<Multi-Use Tester used>** Measure item No. 65 “Oil Press SW 5” of Service Data.
	Inspection condition		Engine in operation **<Multi-Use Tester not used>** Measure from back side of harness connector with electronic control unit connected to harness.
	Requirements		**<Multi-Use Tester not used>** • In 1st gear: 0 V • In 2nd, 3rd, 4th, 5th, 6th gears: 12 V **<Multi-Use Tester used>** • In 1st gear: ON • In 2nd, 3rd, 4th, 5th, 6th gears: OFF
	Inspection result (Is the judging standard satisfied?)	YES	Go to transient fault (See Gr00.).
		NO	• Check if a diagnosis code related to the oil pressure switch 5 occurs. If it does, perform troubleshooting of the code. • Replacement of electronic control unit

[Fault code]
Diagnosis code: P0766/Flash code: 55
[Monitor ID]
64
[Fault (outline)]
Shift solenoid 3 binds in OFF state.
[Diagnosis check]
- Shift solenoid 3 (shift solenoid valve 4) is monitored for fault when switched from pressure OFF to pressure ON according to the response of oil pressure switch 6

[Code generation condition]
- Oil pressure switch 6 remains OFF (low pressure).

[Diagnosis check timing]
- Fault diagnosis is performed each time when the control is activated.

[Diagnostic requirement]
- After shift solenoid 3 (shift solenoid valve 4) switched from pressure OFF to ON

[Control effected by electronic control unit during fault]
- Lockup control is turned OFF
- Control is effected on fixed speed gear output (2nd).

[Probable cause of trouble]
- Open-circuit or short-circuit of harness between electronic control unit and shift solenoid 3 or oil pressure switch 6
- Malfunction of each connector
- Malfunction of shift solenoid 3 or oil pressure switch 6
- Malfunction of electronic control unit

[Recoverability]
- Recovered if signal becomes normal when starter switch is turned OFF to ON (power supply resumed to electronic control unit).

[Electronic Control Unit Connection Diagram]

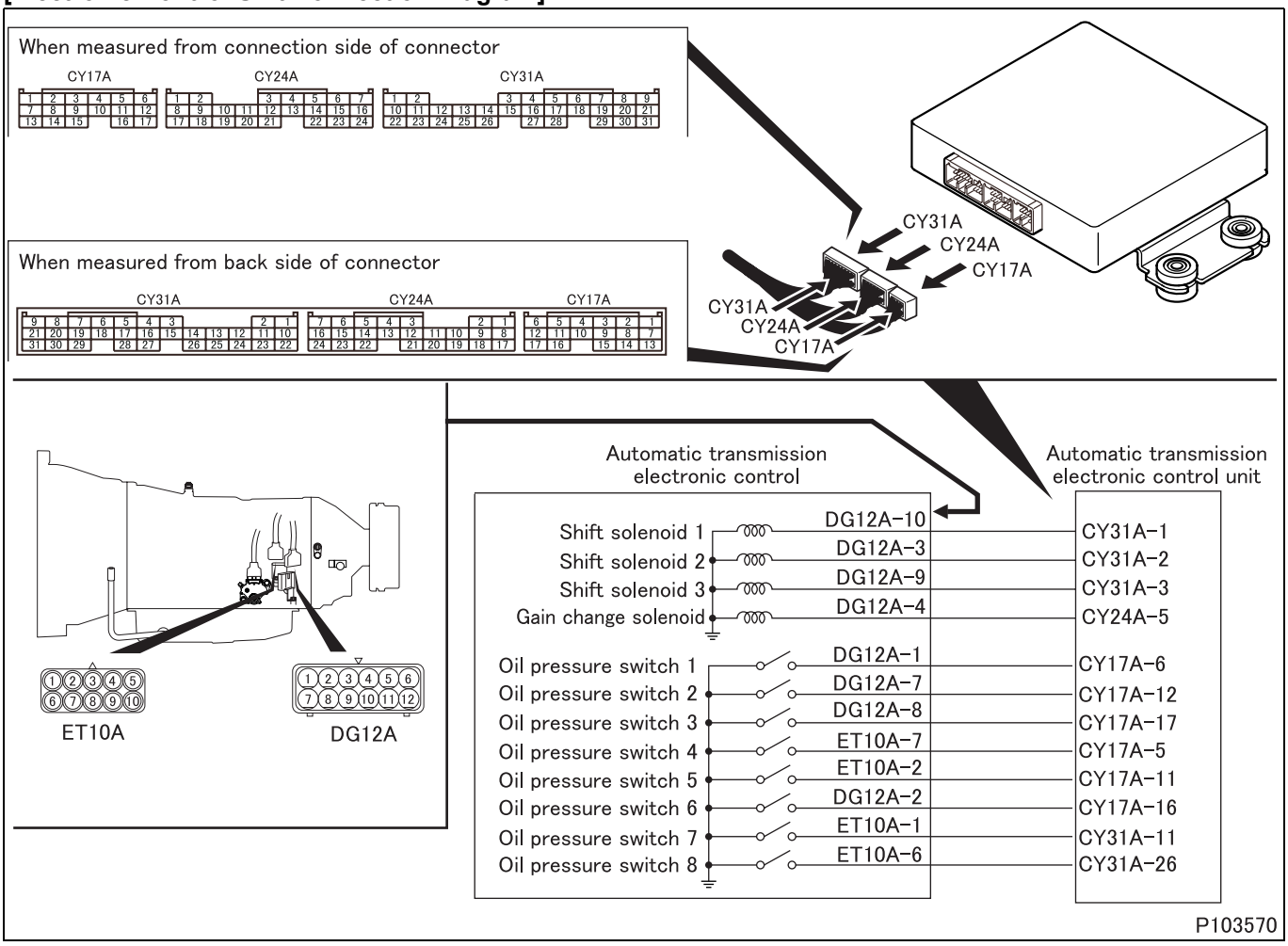

[Parts Identification and Location]

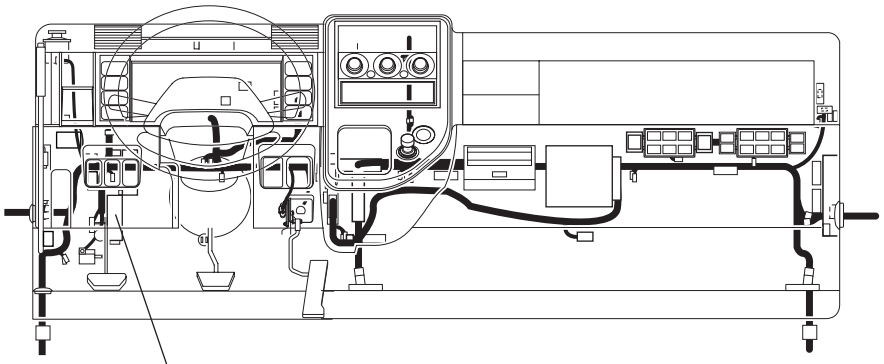

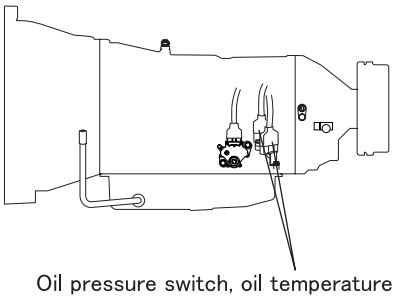

P103560-2

[Fault diagnosis]

- Perform checks in the sequence of the following steps.

Step 1	Inspection items		Inspection by control data
	Maintenance item		**<Multi-Use Tester not used>** Measure value of voltage between connector (CY31A) terminal No. 3 (+) and connector (CY24A) terminal No. 8 (–). **<Multi-Use Tester used>** Measure items No. 33 “Shift Valve 3” and No. 73 “Shift Valve Press 3” of Service Data.
	Inspection condition		**<Multi-Use Tester not used>** Measure from back side of harness connector with electronic control unit connected to harness.
	Requirements		**<Multi-Use Tester not used>** • In 1st gear: 12 V • In any gears except above: 0 V **<Multi-Use Tester used>** <No. 33 “Shift Valve 3”> • In 1st gear: ON • In any gears except above: OFF <No. 73 “Shift Valve Press 3”> • In 1st gear: HIGH • In any gears except above: LOW
	Inspection result (Is the judging standard satisfied?)	YES	Go to transient fault (See Gr00.).
		NO	Go to step 2.

Step 2	Inspection items		Inspection by control data
	Maintenance item		**<Multi-Use Tester not used>** Measure value of voltage between connector (CY17A) terminal No. 16 (+) and connector (CY24A) terminal No. 8 (–). **<Multi-Use Tester used>** Measure item No. 66 “Oil Press SW 6” of Service Data.
	Inspection condition		Engine in operation **<Multi-Use Tester not used>** Measure from back side of harness connector with electronic control unit connected to harness.
	Requirements		**<Multi-Use Tester not used>** • In 1st gear: 0 V • In 2nd, 3rd, 4th, 5th, 6th gears: 12 V **<Multi-Use Tester used>** • In 1st gear: ON • In 2nd, 3rd, 4th, 5th, 6th gears: OFF
	Inspection result (Is the judging standard satisfied?)	YES	Go to transient fault (See Gr00.).
		NO	Go to step 3.

Step 3	Inspection items		Inspection by electronic control unit connector (signal)
	Maintenance item		Measure value of resistance between connector (CY24A) terminal No. 5 and chassis ground.
	Inspection condition		• Disconnect electronic control unit and harness, and measure from connection side of harness connector. • Starter switch: OFF
	Requirements		13 ± 2 Ω
	Inspection result (Is the judging standard satisfied?)	YES	Go to step 4.
		NO	Go to step 5.

Step 4	Inspection items		Inspection of electronic control unit connector
	Maintenance item		Inspection of connector
	Inspection condition		–
	Requirements		• Connector is properly connected. • No trace of water entry is found. • No corrosion is found in terminal. • Connection to terminal is appropriate.
	Inspection result (Is the judging standard satisfied?)	YES	Go to step 8.
		NO	Modify connector.

Step 5	Inspection items		Inspection of solenoid connector
	Maintenance item		Inspection of connector
	Inspection condition		–
	Requirements		• Connector is properly connected. • No trace of water entry is found. • No corrosion is found in terminal. • Connection to terminal is appropriate.
	Inspection result (Is the judging standard satisfied?)	YES	Go to step 6.
		NO	Modify connector.

Step 6	Inspection items		Inspection of solenoid unit
	Maintenance item		Measure value of resistance between connector (DG12A) terminal No. 4 and automatic transmission case.
	Inspection condition		• Disconnect connector, and measure solenoid side terminal. • Starter switch: OFF
	Requirements		13 ± 2 Ω
	Inspection result (Is the judging standard satisfied?)	YES	Go to step 7.
		NO	Replacement of automatic transmission

<Step 6 inspection diagram>

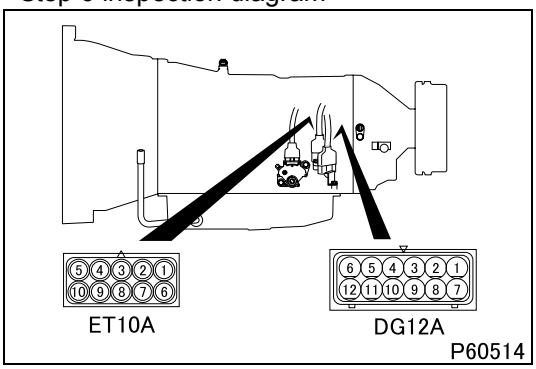

Step 7	Inspection items		Inspection of harness between solenoid and electronic control unit (power supply)
	Maintenance item		Check circuit between connector (DG12A) terminal No. 4 and electronic control unit connector (CY24A) terminal No. 5.
	Inspection condition		Disconnect each device from harness and measure from connection side of harness connector.
	Requirements		There is continuity.
	Inspection result (Is the judging standard satisfied?)	YES	Go to step 8.
		NO	Modify harness.

Step 8	Inspection items		Inspection by control data
	Maintenance item		**<Multi-Use Tester not used>** Measure value of voltage between connector (CY31A) terminal No. 3 (+) and connector (CY24A) terminal No. 8 (–). **<Multi-Use Tester used>** Measure items No. 33 “Shift Valve 3” and No. 73 “Shift Valve Press 3” of Service Data.
	Inspection condition		**<Multi-Use Tester not used>** Measure from back side of harness connector with electronic control unit connected to harness.
	Requirements		**<Multi-Use Tester not used>** • In 1st gear: 12 V • In any gears except above: 0 V **<Multi-Use Tester used>** <No. 33 “Shift Valve 3”> • In 1st gear: ON • In any gears except above: OFF <No. 73 “Shift Valve Press 3”> • In 1st gear: HIGH • In any gears except above: LOW
	Inspection result (Is the judging standard satisfied?)	YES	Go to transient fault (See Gr00.).
		NO	Go to step 9.

Step 9	Inspection items		Inspection by control data
	Maintenance item		**<Multi-Use Tester not used>** Measure value of voltage between connector (CY17A) terminal No. 16 (+) and connector (CY24A) terminal No. 8 (–). **<Multi-Use Tester used>** Measure item No. 66 “Oil Press SW 6” of Service Data.
	Inspection condition		Engine in operation **<Multi-Use Tester not used>** Measure from back side of harness connector with electronic control unit connected to harness.
	Requirements		**<Multi-Use Tester not used>** • In 1st gear: 0 V • In 2nd, 3rd, 4th, 5th, 6th gears: 12 V **<Multi-Use Tester used>** • In 1st gear: ON • In 2nd, 3rd, 4th, 5th, 6th gears: OFF oil pressure switch 6
	Inspection result (Is the judging standard satisfied?)	YES	Go to transient fault (See Gr00.).
		NO	• Check if a diagnosis code related to the oil pressure switch 6 occurs. If it does, perform troubleshooting of the code. • Replacement of electronic control unit

[Fault code]
Diagnosis code: P0767/Flash code: 55
[Monitor ID]
63
[Fault (outline)]
Shift solenoid 3 binds in ON state.
[Diagnosis check]
- Shift solenoid 3 (shift solenoid valve 4) is monitored for fault when switched from pressure ON to pressure OFF according to the response of oil pressure switch 6

[Code generation condition]
- Oil pressure switch 6 remains ON (high pressure).

[Diagnosis check timing]
- Fault diagnosis is performed each time when the control is activated.

[Diagnostic requirement]
- After shift solenoid 3 (shift solenoid valve 4) switched from pressure ON to OFF

[Control effected by electronic control unit during fault]
- Lockup control is turned OFF
- Control is effected on fixed speed gear output (2nd).

[Probable cause of trouble]
- Open-circuit or short-circuit of harness between electronic control unit and shift solenoid 3 or oil pressure switch 6
- Malfunction of each connector
- Malfunction of shift solenoid 3 or oil pressure switch 6
- Malfunction of electronic control unit

[Recoverability]
- Recovered if signal becomes normal when starter switch is turned OFF to ON (power supply resumed to electronic control unit).

[Electronic Control Unit Connection Diagram]

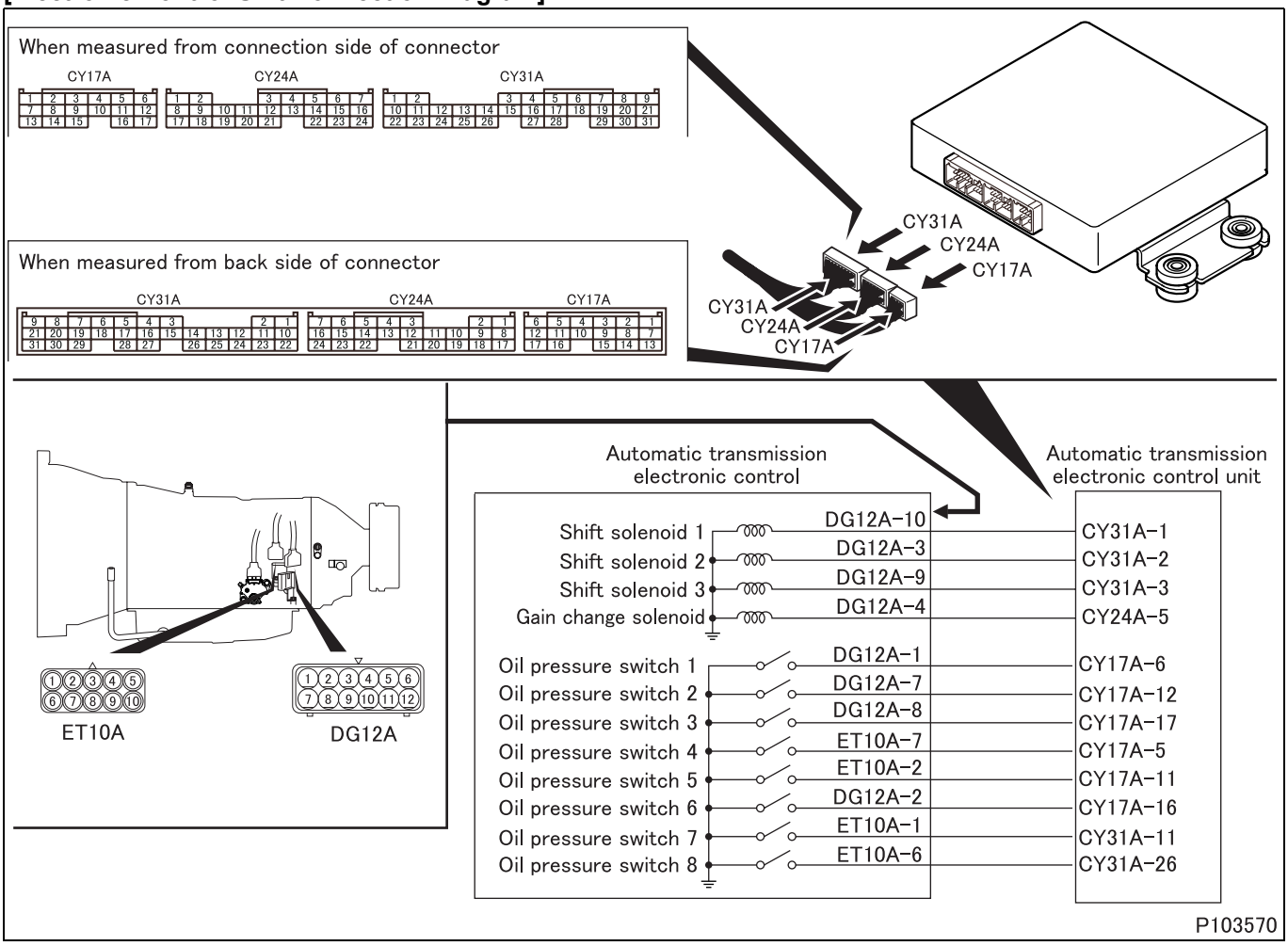

[Parts Identification and Location]

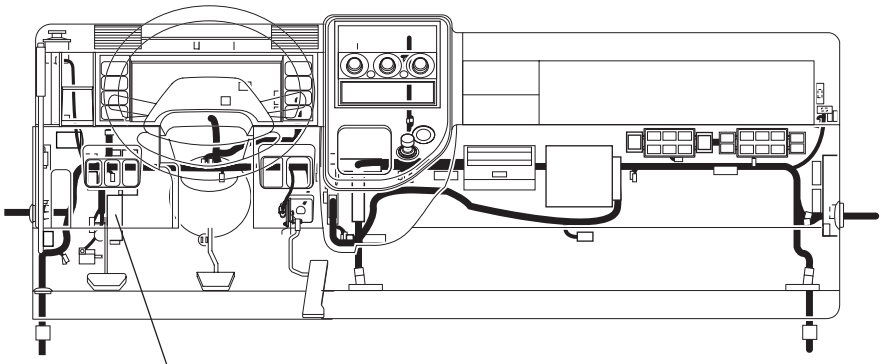

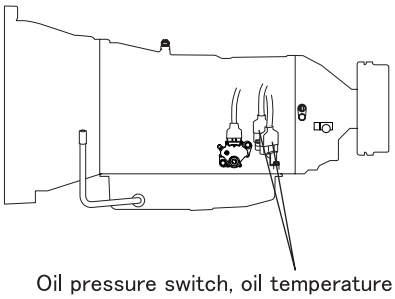

P103560-2

[Fault diagnosis]

- Perform checks in the sequence of the following steps.

Step 1	Inspection items		Inspection by control data
	Maintenance item		**<Multi-Use Tester not used>** Measure value of voltage between connector (CY31A) terminal No. 3 (+) and connector (CY24A) terminal No. 8 (–). **<Multi-Use Tester used>** Measure items No. 33 “Shift Valve 3” and No. 73 “Shift Valve Press 3” of Service Data.
	Inspection condition		**<Multi-Use Tester not used>** Measure from back side of harness connector with electronic control unit connected to harness.
	Requirements		**<Multi-Use Tester not used>** • In 1st gear: 12 V • In any gears except above: 0 V **<Multi-Use Tester used>** <No. 33 “Shift Valve 3”> • In 1st gear: ON • In any gears except above: OFF <No. 73 “Shift Valve Press 3”> • In 1st gear: HIGH • In any gears except above: LOW
	Inspection result (Is the judging standard satisfied?)	YES	Go to transient fault (See Gr00.).
		NO	Go to step 2.

Step 2	Inspection items		Inspection by control data
	Maintenance item		**<Multi-Use Tester not used>** Measure value of voltage between connector (CY17A) terminal No. 16 (+) and connector (CY24A) terminal No. 8 (–). **<Multi-Use Tester used>** Measure item No. 66 “Oil Press SW 6” of Service Data.
	Inspection condition		Engine in operation **<Multi-Use Tester not used>** Measure from back side of harness connector with electronic control unit connected to harness.
	Requirements		**<Multi-Use Tester not used>** • In 1st gear: 0 V • In 2nd, 3rd, 4th, 5th, 6th gears: 12 V **<Multi-Use Tester used>** • In 1st gear: ON • In 2nd, 3rd, 4th, 5th, 6th gears: OFF
	Inspection result (Is the judging standard satisfied?)	YES	Go to transient fault (See Gr00.).
		NO	Go to step 3.

Step 3	Inspection items		Inspection by electronic control unit connector (signal)
	Maintenance item		Measure value of resistance between connector (CY24A) terminal No. 5 and chassis ground.
	Inspection condition		• Disconnect electronic control unit and harness, and measure from connection side of harness connector. • Starter switch: OFF
	Requirements		13 ± 2 Ω
	Inspection result (Is the judging standard satisfied?)	YES	Go to step 4.
		NO	Go to step 5.

Step 4	Inspection items		Inspection of electronic control unit connector
	Maintenance item		Inspection of connector
	Inspection condition		–
	Requirements		• Connector is properly connected. • No trace of water entry is found. • No corrosion is found in terminal. • Connection to terminal is appropriate.
	Inspection result (Is the judging standard satisfied?)	YES	Go to step 8.
		NO	Modify connector.

Step 5	Inspection items		Inspection of solenoid connector
	Maintenance item		Inspection of connector
	Inspection condition		–
	Requirements		• Connector is properly connected. • No trace of water entry is found. • No corrosion is found in terminal. • Connection to terminal is appropriate.
	Inspection result (Is the judging standard satisfied?)	YES	Go to step 6.
		NO	Modify connector.

Step 6	Inspection items		Inspection of solenoid unit
	Maintenance item		Measure value of resistance between connector (DG12A) terminal No. 4 and automatic transmission case.
	Inspection condition		• Disconnect connector, and measure solenoid side terminal. • Starter switch: OFF
	Requirements		13 ± 2 Ω
	Inspection result (Is the judging standard satisfied?)	YES	Go to step 7.
		NO	Replacement of automatic transmission

<Step 6 inspection diagram>

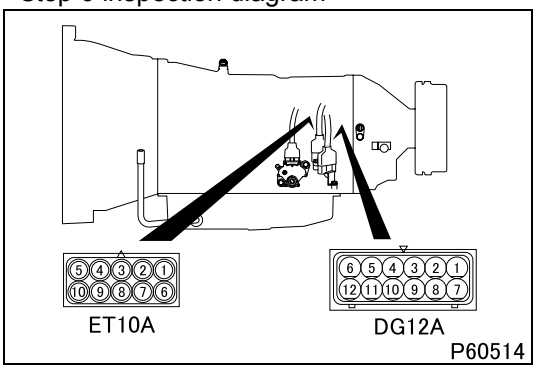

Step 7	Inspection items		Inspection of harness between solenoid and electronic control unit (power supply)
	Maintenance item		Check circuit between connector (DG12A) terminal No. 4 and electronic control unit connector (CY24A) terminal No. 5.
	Inspection condition		Disconnect each device from harness and measure from connection side of harness connector.
	Requirements		There is continuity.
	Inspection result (Is the judging standard satisfied?)	YES	Go to step 8.
		NO	Modify harness.

Step 8	Inspection items		Inspection by control data
	Maintenance item		**<Multi-Use Tester not used>** Measure value of voltage between connector (CY31A) terminal No. 3 (+) and connector (CY24A) terminal No. 8 (–). **<Multi-Use Tester used>** Measure items No. 33 “Shift Valve 3” and No. 73 “Shift Valve Press 3” of Service Data.
	Inspection condition		**<Multi-Use Tester not used>** Measure from back side of harness connector with electronic control unit connected to harness.
	Requirements		**<Multi-Use Tester not used>** • In 1st gear: 12 V • In any gears except above: 0 V **<Multi-Use Tester used>** <No. 33 “Shift Valve 3”> • In 1st gear: ON • In any gears except above: OFF <No. 73 “Shift Valve Press 3”> • In 1st gear: HIGH • In any gears except above: LOW
	Inspection result (Is the judging standard satisfied?)	YES	Go to transient fault (See Gr00.).
		NO	Go to step 9.

Step 9	Inspection items		Inspection by control data
	Maintenance item		**<Multi-Use Tester not used>** Measure value of voltage between connector (CY17A) terminal No. 16 (+) and connector (CY24A) terminal No. 8 (–). **<Multi-Use Tester used>** Measure item No. 66 “Oil Press SW 6” of Service Data.
	Inspection condition		Engine in operation **<Multi-Use Tester not used>** Measure from back side of harness connector with electronic control unit connected to harness.
	Requirements		**<Multi-Use Tester not used>** • In 1st gear: 0 V • In 2nd, 3rd, 4th, 5th, 6th gears: 12 V **<Multi-Use Tester used>** • In 1st gear: ON • In 2nd, 3rd, 4th, 5th, 6th gears: OFF
	Inspection result (Is the judging standard satisfied?)	YES	Go to transient fault (See Gr00.).
		NO	• Check if a diagnosis code related to the oil pressure switch 6 occurs. If it does, perform troubleshooting of the code. • Replacement of electronic control unit

[Fault code]
Diagnosis code: P0776/Flash code: 42
[Monitor ID]
43, 44
[Fault (outline)]
Linear solenoid 2 binds in OFF state.
[Diagnosis check]
- Linear solenoid 2 is monitored for fault when switched from low to high pressure according to the response of oil pressure switch 2

[Code generation condition]
- Oil pressure switch 2 remains OFF (low pressure).

[Diagnosis check timing]
- Fault diagnosis is performed each time when the control is activated.

[Diagnostic requirement]
- After linear solenoid 2 switched from low to high pressure
- Automatic transmission fluid temperature: above –10°C {14°F} <used for a part of judgment>

[Control effected by electronic control unit during fault]
- Lockup control is turned OFF
- Control is effected on fixed speed gear output (4th).

[Probable cause of trouble]
- Open-circuit or short-circuit of harness between electronic control unit and linear solenoid 2 or oil pressure switch 2
- Malfunction of each connector
- Malfunction of linear solenoid 2 or oil pressure switch 2
- Malfunction of electronic control unit

[Recoverability]
- Recovered if signal becomes normal when starter switch is turned OFF to ON (power supply resumed to electronic control unit).

[Electronic Control Unit Connection Diagram]

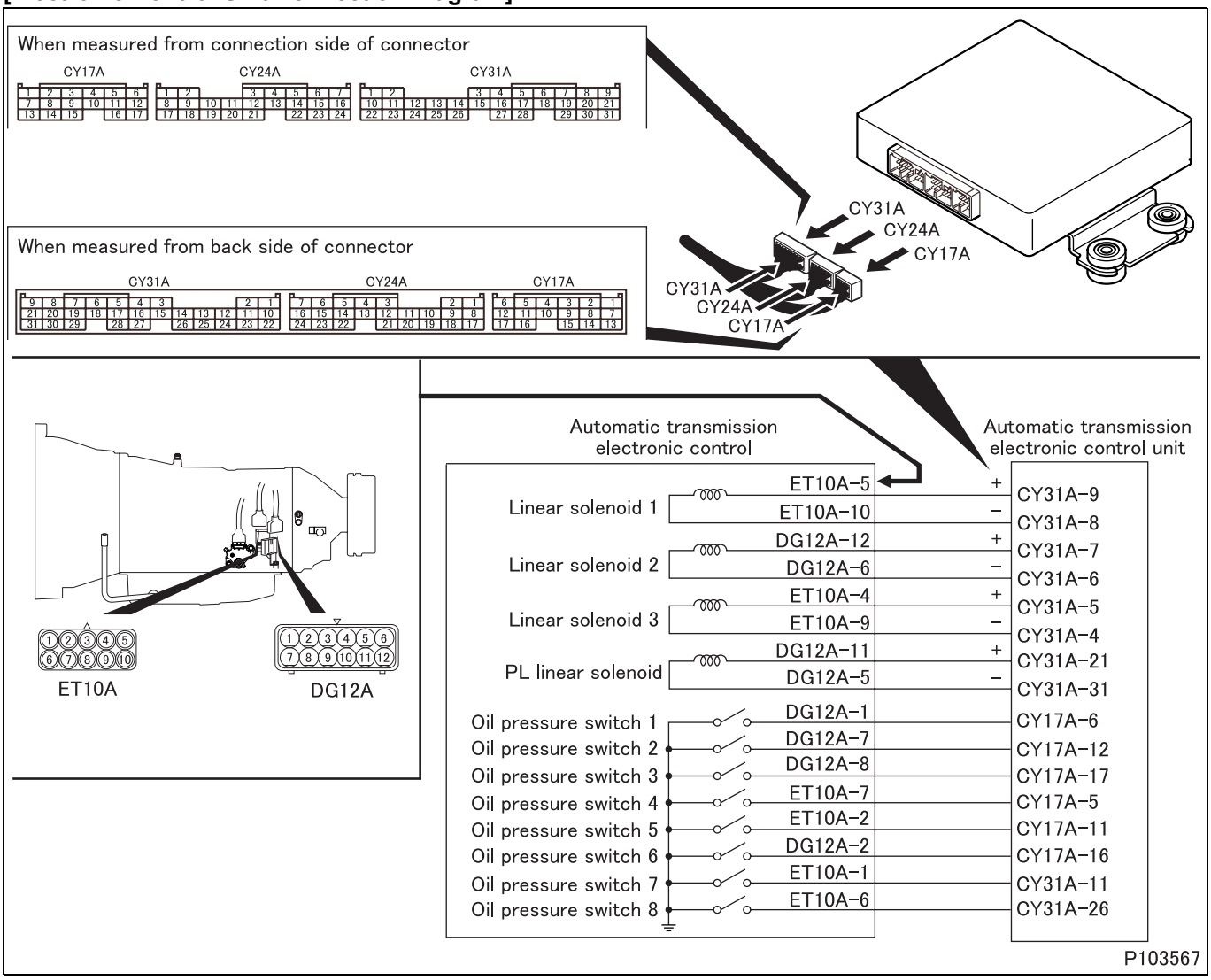

[Parts Identification and Location]

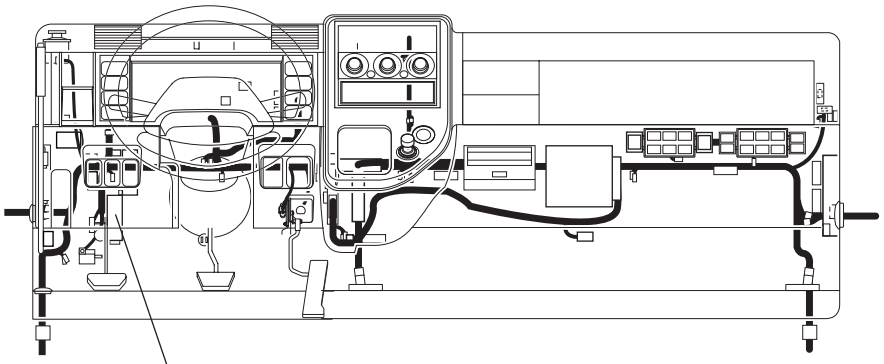

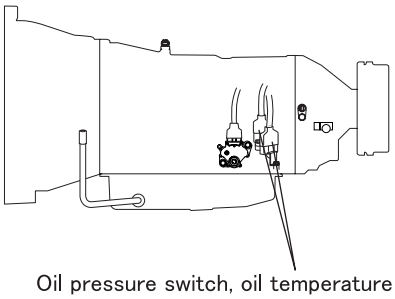

P103560-2

[Fault diagnosis]

- Perform checks in the sequence of the following steps.

Step 1	Inspection items		Inspection by control data
	Maintenance item		**<Multi-Use Tester not used>** Go to step 2. **<Multi-Use Tester used>** Measure item No. 27 “Linear Sol Press 2” of Service Data.
	Inspection condition		Vehicle run
	Requirements		• During speed change (2nd to 3rd, 4th to 5th): Rises • During speed change (1st to 2nd, 3rd to 4th, 5th to 6th): Declines
	Inspection result (Is the judging standard satisfied?)	YES	Go to transient fault (See Gr00.).
		NO	Go to step 2.

Step 2	Inspection items		Inspection by control data
	Maintenance item		**<Multi-Use Tester not used>** Measure value of resistance between connector (CY17A) terminal No. 12 (+) and connector (CY24A) terminal No. 8 (–). **<Multi-Use Tester used>** Measure item No. 62 “Oil Press SW 2” of Service Data.
	Inspection condition		Engine in operation **<Multi-Use Tester not used>** Measure from back side of harness connector with electronic control unit connected to harness.
	Requirements		**<Multi-Use Tester not used>** • In 1st, 3rd, 5th gears: 0 V • In 2nd, 4th, 6th gears: 12 V **<Multi-Use Tester used>** • In 1st, 3rd, 5th gears: ON • In 2nd, 4th, 6th gears: OFF
	Inspection result (Is the judging standard satisfied?)	YES	Go to transient fault (See Gr00.).
		NO	Go to step 3.

Step 3	Inspection items		Inspection by electronic control unit connector (signal)
	Maintenance item		Measure value of resistance between connector (CY31A) terminal No. 6 and 7.
	Inspection condition		• Disconnect electronic control unit and harness, and measure from connection side of harness connector. • Starter switch: OFF
	Requirements		5.5 ± 0.5 Ω
	Inspection result (Is the judging standard satisfied?)	YES	Go to step 4.
		NO	Go to step 5.

Step 4	Inspection items		Inspection of electronic control unit connector
	Maintenance item		Inspection of connector
	Inspection condition		–
	Requirements		• Connector is properly connected. • No trace of water entry is found. • No corrosion is found in terminal. • Connection to terminal is appropriate.
	Inspection result (Is the judging standard satisfied?)	YES	Go to step 9.
		NO	Modify connector.

Step 5	Inspection items		Inspection of solenoid connector
	Maintenance item		Inspection of connector
	Inspection condition		–
	Requirements		• Connector is properly connected. • No trace of water entry is found. • No corrosion is found in terminal. • Connection to terminal is appropriate.
	Inspection result (Is the judging standard satisfied?)	YES	Go to step 6.
		NO	Modify connector.

Step 6	Inspection items		Inspection of solenoid unit
	Maintenance item		Measure value of resistance between connector (DG12A) terminal No. 6 and 12.
	Inspection condition		• Disconnect connector, and measure solenoid side terminal. • Starter switch: OFF
	Requirements		5.5 ± 0.5 Ω
	Inspection result (Is the judging standard satisfied?)	YES	Go to step 7.
		NO	Replacement of automatic transmission

<Step 6 inspection diagram>

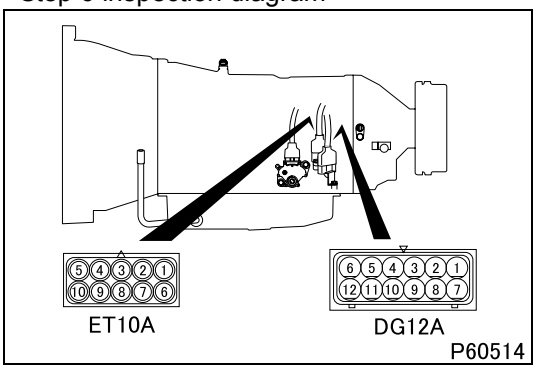

Step 7	Inspection items		Inspection of harness between solenoid and electronic control unit (power supply)
	Maintenance item		Check circuit between connector (DG12A) terminal No. 12 and electronic control unit connector (CY31A) terminal No. 7.
	Inspection condition		Disconnect each device from harness and measure from connection side of harness connector.
	Requirements		There is continuity.
	Inspection result (Is the judging standard satisfied?)	YES	Go to step 8.
		NO	Modify harness.

Step 8	Inspection items		Inspection of harness between solenoid and electronic control unit (ground)
	Maintenance item		Check circuit between connector (DG12A) terminal No. 6 and electronic control unit connector (CY31A) terminal No. 6.
	Inspection condition		Disconnect each device from harness and measure from connection side of harness connector.
	Requirements		There is continuity.
	Inspection result (Is the judging standard satisfied?)	YES	Go to step 9.
		NO	Modify harness.

Step 9	Inspection items		Inspection by control data
	Maintenance item		**<Multi-Use Tester not used>** Check for recurrence of the same diagnosis code. **<Multi-Use Tester used>** Measure item No. 27 “Linear Sol Press 2” of Service Data.
	Inspection condition		Vehicle run
	Requirements		**<Multi-Use Tester not used>** If the same diagnosis code occurs, replace electronic control unit. **<Multi-Use Tester used>** • During speed change (2nd to 3rd, 4th to 5th): Rises • During speed change (1st to 2nd, 3rd to 4th, 5th to 6th): Declines
	Inspection result (Is the judging standard satisfied?)	YES	Go to transient fault (See Gr00.).
		NO	Go to step 10.

Step 10	Inspection items		Inspection by control data
	Maintenance item		**<Multi-Use Tester not used>** Measure value of resistance between connector (CY17A) terminal No. 12 (+) and connector (CY24A) terminal No. 8 (–). **<Multi-Use Tester used>** Measure item No. 62 “Oil Press SW 2” of Service Data.
	Inspection condition		Engine in operation **<Multi-Use Tester not used>** Measure from back side of harness connector with electronic control unit connected to harness.
	Requirements		**<Multi-Use Tester not used>** • In 1st, 3rd, 5th gears: 0 V • In 2nd, 4th, 6th gears: 12 V **<Multi-Use Tester used>** • In 1st, 3rd, 5th gears: ON • In 2nd, 4th, 6th gears: OFF
	Inspection result (Is the judging standard satisfied?)	YES	Go to transient fault (See Gr00.).
		NO	• Check if a diagnosis code related to the oil pressure switch 2 occurs. If it does, perform troubleshooting of the code. • Replacement of electronic control unit

[Fault code]
Diagnosis code: P0777/Flash code: 42
[Monitor ID]
45
[Fault (outline)]
Linear solenoid 2 binds in ON state.
[Diagnosis check]
- Linear solenoid 2 is monitored for fault when switched from high to low pressure according to the response of oil pressure switch 2

[Code generation condition]
- Oil pressure switch 2 remains ON (high pressure).

[Diagnosis check timing]
- Fault diagnosis is performed each time when the control is activated.

[Diagnostic requirement]
- After linear solenoid 2 switched from high to low pressure

[Control effected by electronic control unit during fault]
- Lockup control is turned OFF
- Control is effected on fixed speed gear output (3rd).

[Probable cause of trouble]
- Open-circuit or short-circuit of harness between electronic control unit and linear solenoid 2 or oil pressure switch 2
- Malfunction of each connector
- Malfunction of linear solenoid 2 or oil pressure switch 2
- Malfunction of electronic control unit

[Recoverability]
- Recovered if signal becomes normal when starter switch is turned OFF to ON (power supply resumed to electronic control unit).

[Electronic Control Unit Connection Diagram]

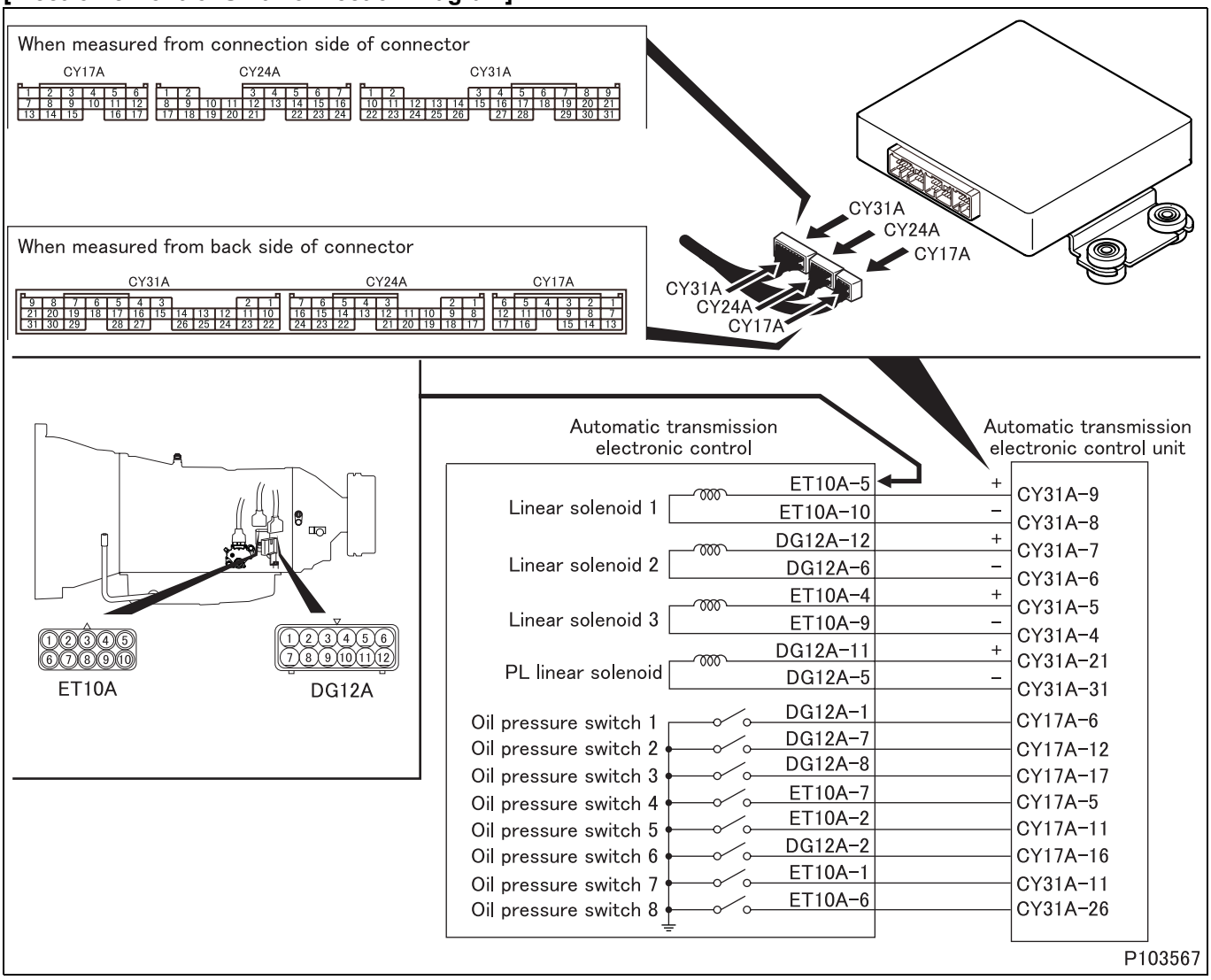

[Parts Identification and Location]

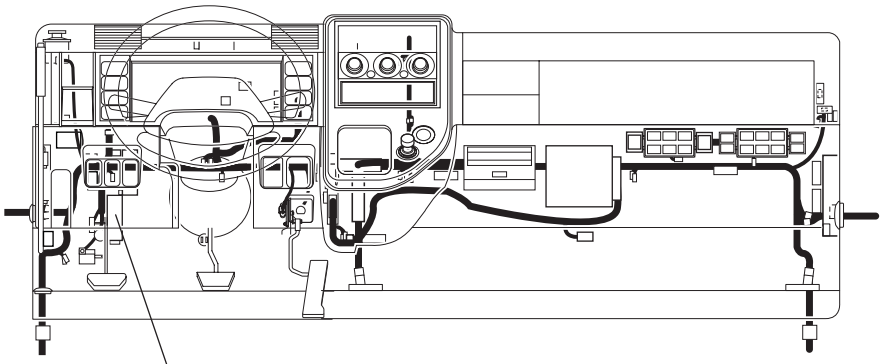

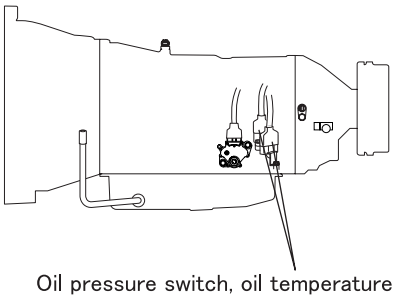

P103560-2

[Fault diagnosis]

- Perform checks in the sequence of the following steps.

Step 1	Inspection items		Inspection by control data
	Maintenance item		**<Multi-Use Tester not used>** Go to step 2. **<Multi-Use Tester used>** Measure item No. 27 “Linear Sol Press 2” of Service Data.
	Inspection condition		Vehicle run
	Requirements		• During speed change (2nd to 3rd, 4th to 5th): Rises • During speed change (1st to 2nd, 3rd to 4th, 5th to 6th): Declines
	Inspection result (Is the judging standard satisfied?)	YES	Go to transient fault (See Gr00.).
		NO	Go to step 2.

Step 2	Inspection items		Inspection by control data
	Maintenance item		**<Multi-Use Tester not used>** Measure value of resistance between connector (CY17A) terminal No. 12 (+) and connector (CY24A) terminal No. 8 (–). **<Multi-Use Tester used>** Measure item No. 62 “Oil Press SW 2” of Service Data.
	Inspection condition		Engine in operation **<Multi-Use Tester not used>** Measure from back side of harness connector with electronic control unit connected to harness.
	Requirements		**<Multi-Use Tester not used>** • In 1st, 3rd, 5th gears: 0 V • In 2nd, 4th, 6th gears: 12 V **<Multi-Use Tester used>** • In 1st, 3rd, 5th gears: ON • In 2nd, 4th, 6th gears: OFF
	Inspection result (Is the judging standard satisfied?)	YES	Go to transient fault (See Gr00.).
		NO	Go to step 3.

Step 3	Inspection items		Inspection by electronic control unit connector (signal)
	Maintenance item		Measure value of resistance between connector (CY31A) terminal No. 6 and 7.
	Inspection condition		• Disconnect electronic control unit and harness, and measure from connection side of harness connector. • Starter switch: OFF
	Requirements		5.5 ± 0.5 Ω
	Inspection result (Is the judging standard satisfied?)	YES	Go to step 4.
		NO	Go to step 5.

Step 4	Inspection items		Inspection of electronic control unit connector
	Maintenance item		Inspection of connector
	Inspection condition		–
	Requirements		• Connector is properly connected. • No trace of water entry is found. • No corrosion is found in terminal. • Connection to terminal is appropriate.
	Inspection result (Is the judging standard satisfied?)	YES	Go to step 9.
		NO	Modify connector.

Step 5	Inspection items		Inspection of solenoid connector
	Maintenance item		Inspection of connector
	Inspection condition		–
	Requirements		• Connector is properly connected. • No trace of water entry is found. • No corrosion is found in terminal. • Connection to terminal is appropriate.
	Inspection result (Is the judging standard satisfied?)	YES	Go to step 6.
		NO	Modify connector.

Step 6	Inspection items		Inspection of solenoid unit
	Maintenance item		Measure value of resistance between connector (DG12A) terminal No. 6 and 12.
	Inspection condition		• Disconnect connector, and measure solenoid side terminal. • Starter switch: OFF
	Requirements		5.5 ± 0.5 Ω
	Inspection result (Is the judging standard satisfied?)	YES	Go to step 7.
		NO	Replacement of automatic transmission

<Step 6 inspection diagram>

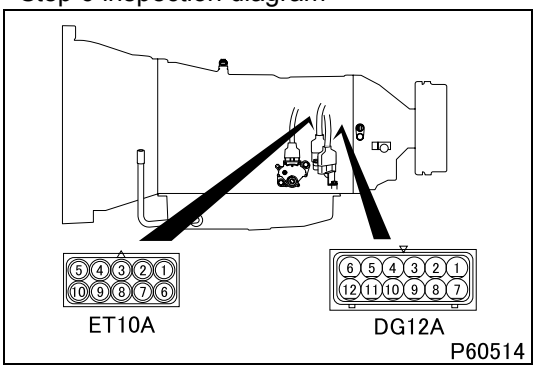

Step 7	Inspection items		Inspection of harness between solenoid and electronic control unit (power supply)
	Maintenance item		Check circuit between connector (DG12A) terminal No. 12 and electronic control unit connector (CY31A) terminal No. 7.
	Inspection condition		Disconnect each device from harness and measure from connection side of harness connector.
	Requirements		There is continuity.
	Inspection result (Is the judging standard satisfied?)	YES	Go to step 8.
		NO	Modify harness.

Step 8	Inspection items		Inspection of harness between solenoid and electronic control unit (ground)
	Maintenance item		Check circuit between connector (DG12A) terminal No.6 and electronic control unit connector (CY31A) terminal No. 6.
	Inspection condition		Disconnect each device from harness and measure from connection side of harness connector.
	Requirements		There is continuity.
	Inspection result (Is the judging standard satisfied?)	YES	Go to step 9.
		NO	Modify harness.

Step 9	Inspection items		Inspection by control data
	Maintenance item		**<Multi-Use Tester not used>** Check for recurrence of the same diagnosis code. **<Multi-Use Tester used>** Measure item No. 27 “Linear Sol Press 2” of Service Data.
	Inspection condition		Vehicle run
	Requirements		**<Multi-Use Tester not used>** If the same diagnosis code occurs, replace electronic control unit. **<Multi-Use Tester used>** • During speed change (2nd to 3rd, 4th to 5th): Rises • During speed change (1st to 2nd, 3rd to 4th, 5th to 6th): Declines
	Inspection result (Is the judging standard satisfied?)	YES	Go to transient fault (See Gr00.).
		NO	Go to step 10.

Step 10	Inspection items		Inspection by control data
	Maintenance item		**<Multi-Use Tester not used>** Measure value of resistance between connector (CY17A) terminal No. 12 (+) and connector (CY24A) terminal No. 8 (–). **<Multi-Use Tester used>** Measure item No. 62 “Oil Press SW 2” of Service Data.
	Inspection condition		Engine in operation **<Multi-Use Tester not used>** Measure from back side of harness connector with electronic control unit connected to harness.
	Requirements		**<Multi-Use Tester not used>** • In 1st, 3rd, 5th gears: 0 V • In 2nd, 4th, 6th gears: 12 V **<Multi-Use Tester used>** • In 1st, 3rd, 5th gears: ON • In 2nd, 4th, 6th gears: OFF
	Inspection result (Is the judging standard satisfied?)	YES	Go to transient fault (See Gr00.).
		NO	• Check if a diagnosis code related to the oil pressure switch 2 occurs. If it does, perform troubleshooting of the code. • Replacement of electronic control unit

[Fault code]
Diagnosis code: P0778/Flash code: 27
[Monitor ID]
23, 24
[Fault (outline)]
Linear solenoid 2 is open-circuited or short-circuited.
[Diagnosis check]
- Resistance and current value in linear solenoid 2 is monitored for fault.

[Code generation condition]
Linear solenoid is judged faulty in either of the following cases.
- Resistance across the linear solenoid 2 remains higher than the specification (100 Ω) for 0.065 second (open-circuited or circuit shorted to power supply).
- Current flowing in the linear solenoid 2 remains higher than the specification (4A) for 0.065 second (circuit shorted to ground).

[Diagnosis check timing]
- Fault diagnosis is continuously performed.

[Diagnostic requirement]
- Continuous

[Control effected by electronic control unit during fault]
- Lockup control is turned OFF
- Control is effected on fixed speed gear output (4th for open-circuit, 3rd for short-circuit).

[Probable cause of trouble]
- Open-circuit or short-circuit of harness between electronic control unit and linear solenoid 2
- Malfunction of each connector
- Malfunction of linear solenoid 2
- Malfunction of electronic control unit

[Recoverability]
- Recovered if signal becomes normal when starter switch is turned OFF to ON (power supply resumed to electronic control unit).

[Electronic Control Unit Connection Diagram]

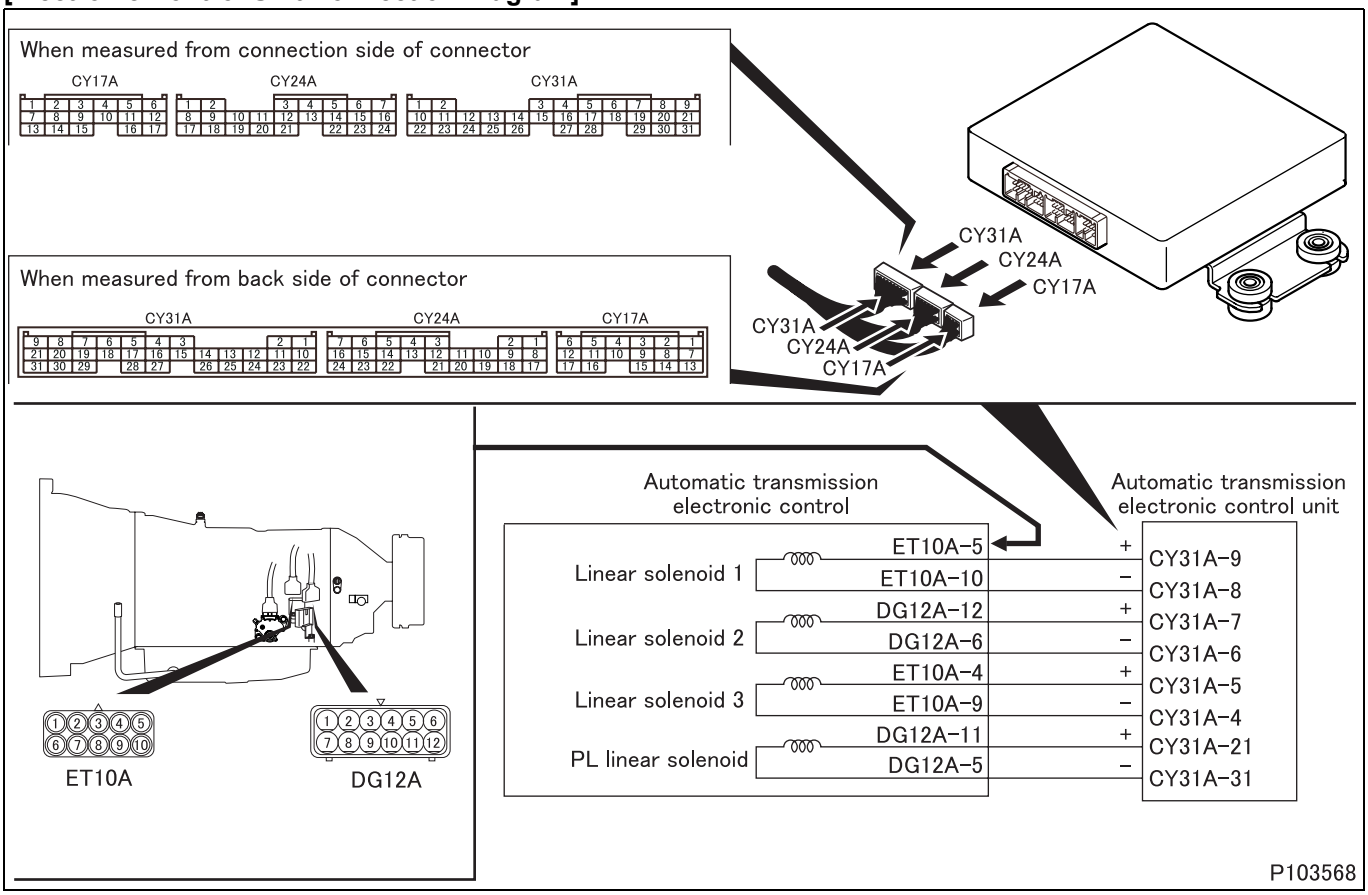

P103568

[Parts Identification and Location]

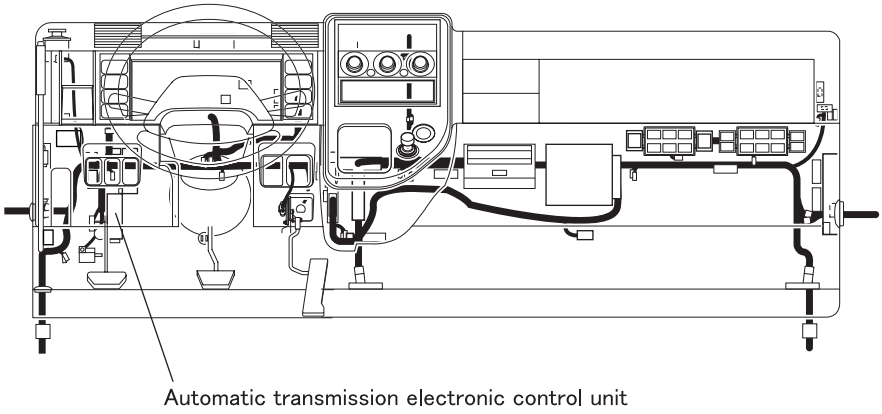

P103560-2

[Fault diagnosis]

- Perform checks in the sequence of the following steps.

Step 1	Inspection items		Inspection by control data
	Maintenance item		**<Multi-Use Tester not used>** Go to step 2. **<Multi-Use Tester used>** Measure item No. 27 “Linear Sol Press 2” of Service Data.
	Inspection condition		Vehicle run
	Requirements		• During speed change (2nd to 3rd, 4th to 5th): Rises • During speed change (1st to 2nd, 3rd to 4th, 5th to 6th): Declines
	Inspection result (Is the judging standard satisfied?)	YES	Go to transient fault (See Gr00.).
		NO	Go to step 2.

Step 2	Inspection items		Inspection by electronic control unit connector (signal)
	Maintenance item		Measure value of resistance between connector (CY31A) terminal No. 6 and 7.
	Inspection condition		• Disconnect electronic control unit and harness, and measure from connection side of harness connector. • Starter switch: OFF
	Requirements		5.5 ± 0.5 Ω
	Inspection result (Is the judging standard satisfied?)	YES	Go to step 3.
		NO	Go to step 4.

Step 3	Inspection items		Inspection of electronic control unit connector
	Maintenance item		Inspection of connector
	Inspection condition		–
	Requirements		• Connector is properly connected. • No trace of water entry is found. • No corrosion is found in terminal. • Connection to terminal is appropriate.
	Inspection result (Is the judging standard satisfied?)	YES	Go to step 8.
		NO	Modify connector.

Step 4	Inspection items		Inspection of solenoid connector
	Maintenance item		Inspection of connector
	Inspection condition		–
	Requirements		• Connector is properly connected. • No trace of water entry is found. • No corrosion is found in terminal. • Connection to terminal is appropriate.
	Inspection result (Is the judging standard satisfied?)	YES	Go to step 5.
		NO	Modify connector.

Step 5	Inspection items		Inspection of solenoid unit
	Maintenance item		Measure value of resistance between connector (DG12A) terminal No. 6 and 12.
	Inspection condition		• Disconnect connector, and measure solenoid side terminal. • Starter switch: OFF
	Requirements		5.5 ± 0.5 Ω
	Inspection result (Is the judging standard satisfied?)	YES	Go to step 6.
		NO	Replacement of automatic transmission

<Step 5 inspection diagram>

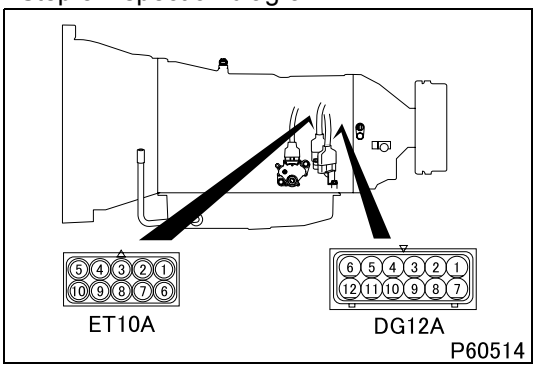

Step 6	Inspection items		Inspection of harness between solenoid and electronic control unit (power supply)
	Maintenance item		Check circuit between connector (DG12A) terminal No. 12 and electronic control unit connector (CY31A) terminal No. 7.
	Inspection condition		Disconnect each device from harness and measure from connection side of harness connector.
	Requirements		There is continuity.
	Inspection result (Is the judging standard satisfied?)	YES	Go to step 7.
		NO	Modify harness.

Step 7	Inspection items		Inspection of harness between solenoid and electronic control unit (ground)
	Maintenance item		Check circuit between connector (DG12A) terminal No. 6 and electronic control unit connector (CY31A) terminal No. 6.
	Inspection condition		Disconnect each device from harness and measure from connection side of harness connector.
	Requirements		There is continuity.
	Inspection result (Is the judging standard satisfied?)	YES	Go to step 8.
		NO	Modify harness.

Step 8	Inspection items		Inspection by control data
	Maintenance item		**<Multi-Use Tester not used>** Check for recurrence of the same diagnosis code. **<Multi-Use Tester used>** Measure item No. 27 “Linear Sol Press 2” of Service Data.
	Inspection condition		Vehicle run
	Requirements		**<Multi-Use Tester not used>** If the same diagnosis code occurs, replace electronic control unit. **<Multi-Use Tester used>** • During speed change (2nd to 3rd, 4th to 5th): Rises • During speed change (1st to 2nd, 3rd to 4th, 5th to 6th): Declines
	Inspection result (Is the judging standard satisfied?)	YES	If the diagnosis code remains after actual run, replace the electronic control unit.
		NO	Replacement of electronic control unit

[Fault code]
Diagnosis code: P0796/Flash code: 48
[Monitor ID]
47
[Fault (outline)]
Linear solenoid 3 is binds in OFF state.
[Diagnosis check]
- When the garage control (selector lever is shifted from N to D or R range) is terminated, the linear solenoid 3 is monitored for flow of the maximum oil pressure according to the response of oil pressure switch 7 and its condition is decided by the electronic control unit.

[Code generation condition]
- Oil pressure switch 7 remains OFF (low pressure).

[Diagnosis check timing]
- Fault diagnosis is performed each time when the control is activated.

[Diagnostic requirement]
- Garage control: termination

[Control effected by electronic control unit during fault]
- Lockup control is turned OFF
- Control is effected on fixed speed gear output (3rd).

[Probable cause of trouble]
- Open-circuit or short-circuit of harness between electronic control unit and linear solenoid 3 or oil pressure switch 7
- Malfunction of each connector
- Malfunction of linear solenoid 3 or oil pressure switch 7
- Malfunction of electronic control unit

[Recoverability]
- Recovered if signal becomes normal when starter switch is turned OFF to ON (power supply resumed to electronic control unit).

[Electronic Control Unit Connection Diagram]

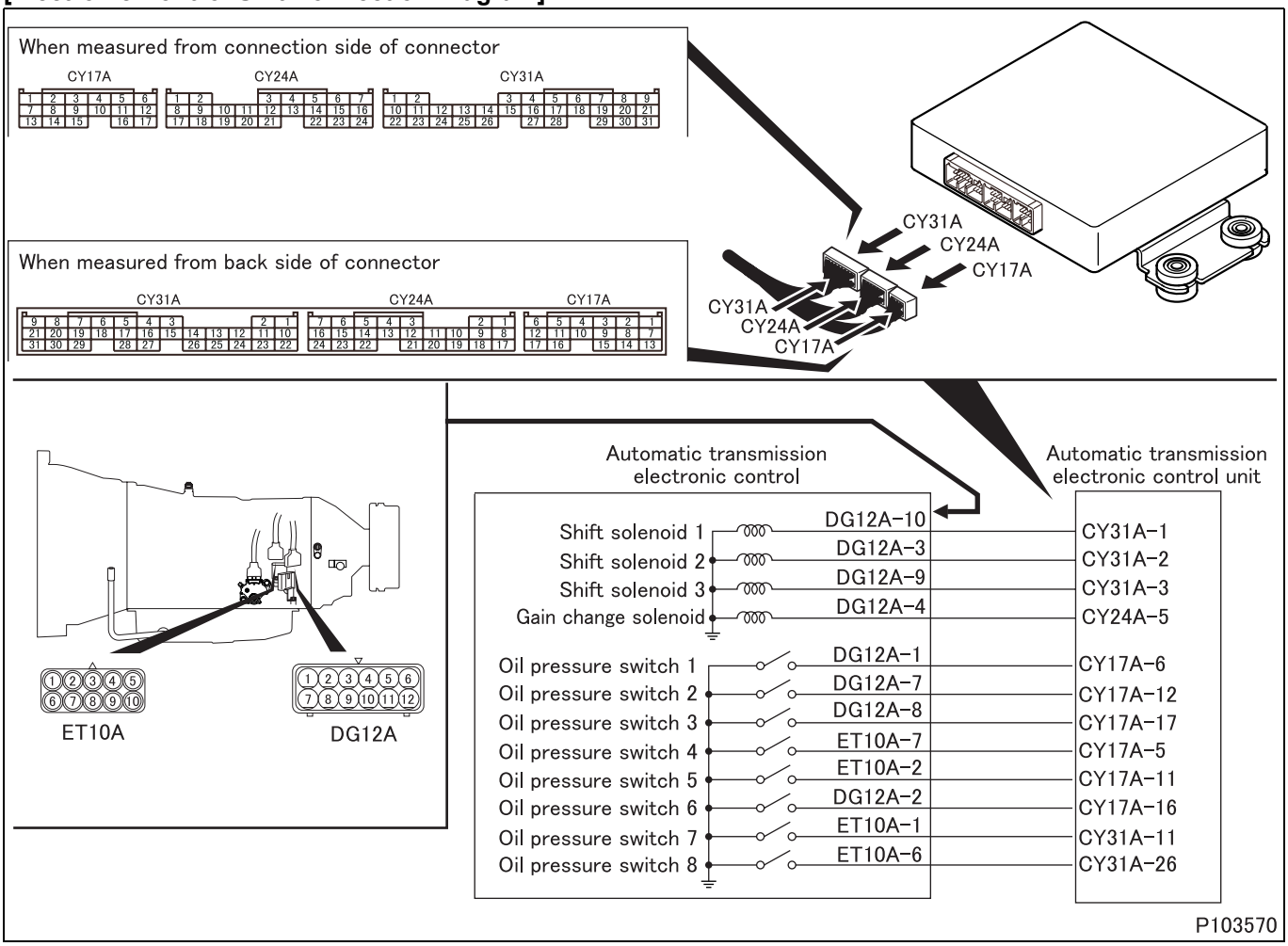

[Parts Identification and Location]

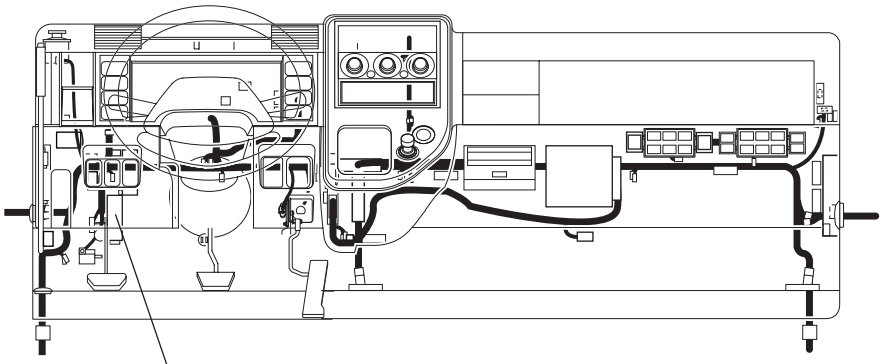

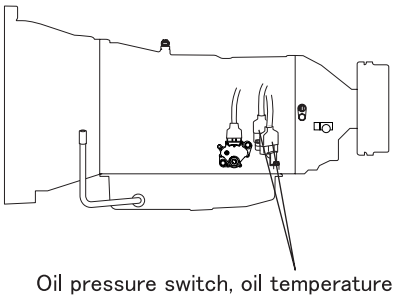

P103560-2

[Fault diagnosis]

- Perform checks in the sequence of the following steps.

Step 1	Inspection items		Inspection by control data
	Maintenance item		**<Multi-Use Tester not used>** Go to step 2. **<Multi-Use Tester used>** Measure item No. 35 “Linear Sol Press 3” of Service Data.
	Inspection condition		Engine in operation <When shifting from N to D> With the brake pedal pressed down, shift the range selector lever (from N to D). <In lock-up state> • Item No. 13 “A/T Oil Temp (OP)” indicates 25°C {77°F} or higher. • Lock-up speed (6th gear, accelerator pedal fully pressed down): 73 to 75 km/h {45.4 to 46.6 mph}
	Requirements		• When shifting from N to D: Varies • In lock-up state: 100 lbf/in^2
	Inspection result (Is the judging standard satisfied?)	YES	Go to transient fault (See Gr00.).
		NO	Go to step 2.

Step 2	Inspection items		Inspection by control data
	Maintenance item		**<Multi-Use Tester not used>** Measure value of voltage between connector (CY31A) terminal No.11 (+) and connector (CY24A) terminal No. 8 (–). **<Multi-Use Tester used>** Measure item No. 67 “Oil Press SW 7” of Service Data.
	Inspection condition		Engine in operation **<Multi-Use Tester not used>** Measure from back side of harness connector with electronic control unit connected to harness.
	Requirements		**<Multi-Use Tester not used>** When shifting N to D: 12 V → 0 V → 12 V **<Multi-Use Tester used>** When shifting N to D: OFF → ON → OFF
	Inspection result (Is the judging standard satisfied?)	YES	Go to transient fault (See Gr00.).
		NO	Go to step 3.

Step 3	Inspection items		Inspection by electronic control unit connector (signal)
	Maintenance item		Measure value of resistance between connector (CY31A) terminal No. 5 and 4.
	Inspection condition		• Disconnect electronic control unit and harness, and measure from connection side of harness connector. • Starter switch: OFF
	Requirements		5.5 ± 0.5 Ω
	Inspection result (Is the judging standard satisfied?)	YES	Go to step 4.
		NO	Go to step 5.

Step 4	Inspection items		Inspection of electronic control unit connector
	Maintenance item		Inspection of connector
	Inspection condition		–
	Requirements		• Connector is properly connected. • No trace of water entry is found. • No corrosion is found in terminal. • Connection to terminal is appropriate.
	Inspection result (Is the judging standard satisfied?)	YES	Go to step 9.
		NO	Modify connector.

Step 5	Inspection items		Inspection of solenoid connector
	Maintenance item		Inspection of connector
	Inspection condition		–
	Requirements		• Connector is properly connected. • No trace of water entry is found. • No corrosion is found in terminal. • Connection to terminal is appropriate.
	Inspection result (Is the judging standard satisfied?)	YES	Go to step 6.
		NO	Modify connector.

Step 6	Inspection items		Inspection of solenoid unit
	Maintenance item		Measure value of resistance between connector (ET10A) terminal No. 4 and 9.
	Inspection condition		• Disconnect connector, and measure solenoid side terminal. • Starter switch: OFF
	Requirements		5.5 ± 0.5 Ω
	Inspection result (Is the judging standard satisfied?)	YES	Go to step 7.
		NO	Replacement of automatic transmission

<Step 6 inspection diagram>

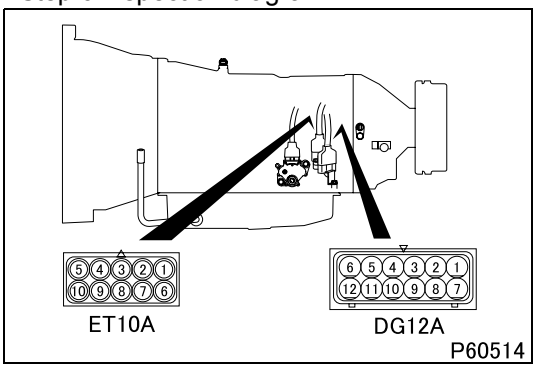

Step 7	Inspection items		Inspection of harness between solenoid and electronic control unit (power supply)
	Maintenance item		Check circuit between connector (ET10A) terminal No. 4 and electronic control unit connector (CY31A) terminal No. 5.
	Inspection condition		Disconnect each device from harness and measure from connection side of harness connector.
	Requirements		There is continuity.
	Inspection result (Is the judging standard satisfied?)	YES	Go to step 8.
		NO	Modify harness.

Step 8	Inspection items		Inspection of harness between solenoid and electronic control unit (ground)
	Maintenance item		Check circuit between connector (ET10A) terminal No. 9 and electronic control unit connector (CY31A) terminal No. 4.
	Inspection condition		Disconnect each device from harness and measure from connection side of harness connector.
	Requirements		There is continuity.
	Inspection result (Is the judging standard satisfied?)	YES	Go to step 9.
		NO	Modify harness.

Step 9	Inspection items		Inspection by control data
	Maintenance item		**<Multi-Use Tester not used>** Check for recurrence of the same diagnosis code. **<Multi-Use Tester used>** Measure item No. 35 “Linear Sol Press 3” of Service Data.
	Inspection condition		Engine in operation <When shifting from N to D> With the brake pedal pressed down, shift the range selector lever (from N to D). <In lock-up state> • Item No. 13 “A/T Oil Temp (OP)” indicates 25°C {77°F} or higher. • Lock-up speed (6th gear, accelerator pedal fully pressed down): 73 to 75 km/h {45.4 to 46.6 mph}
	Requirements		**<Multi-Use Tester not used>** If the same diagnosis code occurs, replace electronic control unit. **<Multi-Use Tester used>** • When shifting from N to D: Varies • In lock-up state: 100 lbf/in^2
	Inspection result (Is the judging standard satisfied?)	YES	Go to transient fault (See Gr00.).
		NO	Go to step 10.

Step 10	Inspection items		Inspection by control data
	Maintenance item		**<Multi-Use Tester not used>** Measure value of voltage between connector (CY31A) terminal No.11 (+) and connector (CY24A) terminal No. 8 (–). **<Multi-Use Tester used>** Measure item No. 67 “Oil Press SW 7” of Service Data.
	Inspection condition		Engine in operation **<Multi-Use Tester not used>** Measure from back side of harness connector with electronic control unit connected to harness.
	Requirements		**<Multi-Use Tester not used>** When shifting N to D: 12 V → 0 V → 12 V **<Multi-Use Tester used>** When shifting N to D: OFF → ON → OFF
	Inspection result (Is the judging standard satisfied?)	YES	Go to transient fault (See Gr00.).
		NO	• Check if a diagnosis code related to the oil pressure switch 7 occurs. If it does, perform troubleshooting of the code. • Replacement of electronic control unit

[Fault code]
Diagnosis code: P0797/Flash code: 48
[Monitor ID]
46
[Fault (outline)]
Linear solenoid 3 is binds in ON state.
[Diagnosis check]
- Linear solenoid 3 is monitored for fault when switched from high to low pressure with the oil pressure switch 6 turned ON (gain change solenoid ON) according to the response of oil pressure switch 7

[Code generation condition]
- Oil pressure switch 7 remains ON (high pressure).

[Diagnosis check timing]
- Fault diagnosis is performed each time when the control is activated.

[Diagnostic requirement]
- Oil pressure switch 6: ON

[Control effected by electronic control unit during fault]
- Lockup control is turned OFF
- Control is effected on fixed speed gear output (2nd).

[Probable cause of trouble]
- Open-circuit or short-circuit of harness between electronic control unit and linear solenoid 3 or oil pressure switch 7
- Malfunction of each connector
- Malfunction of linear solenoid 3 or oil pressure switch 7
- Malfunction of electronic control unit

[Recoverability]
- Recovered if signal becomes normal when starter switch is turned OFF to ON (power supply resumed to electronic control unit).

[Electronic Control Unit Connection Diagram]

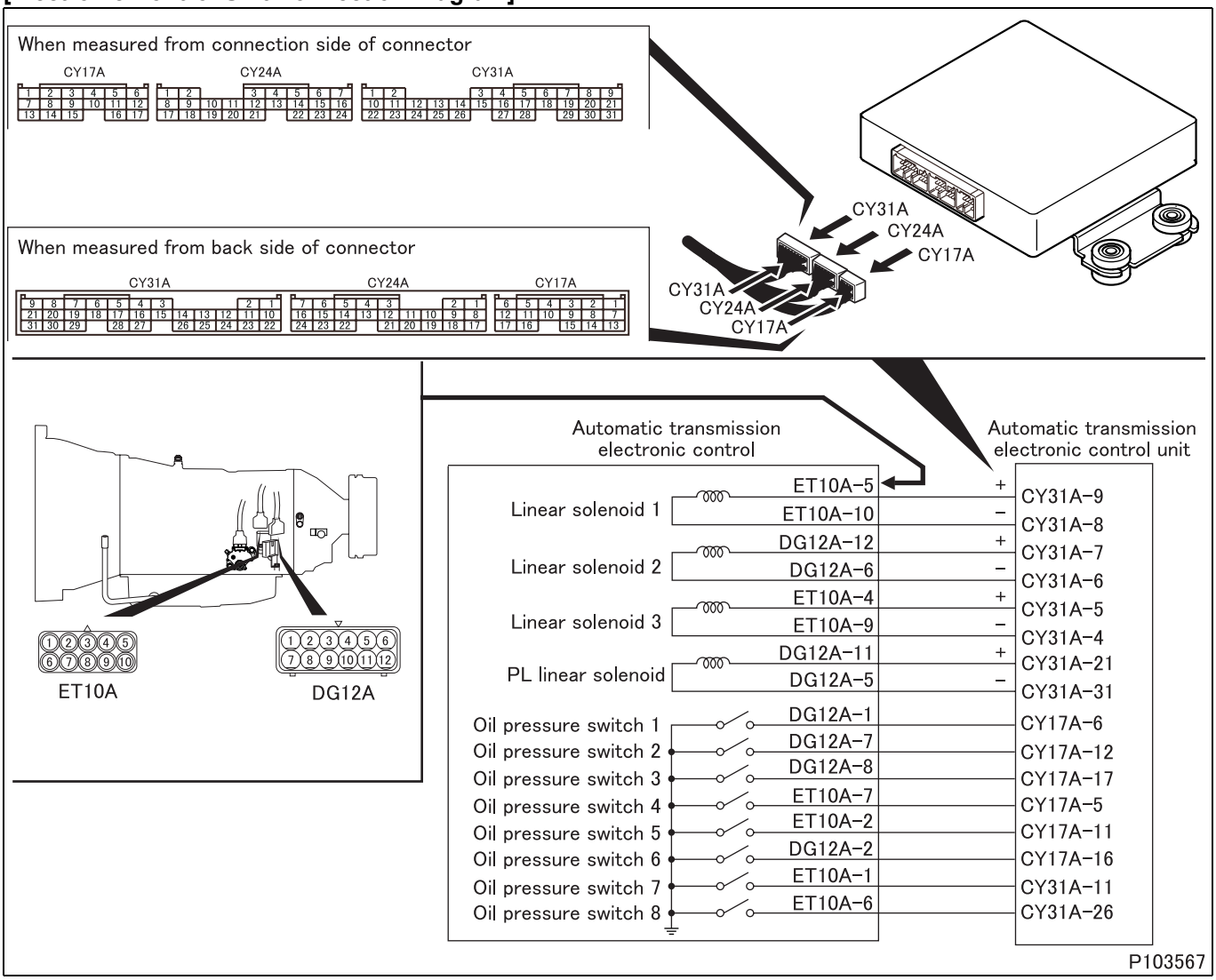

[Parts Identification and Location]

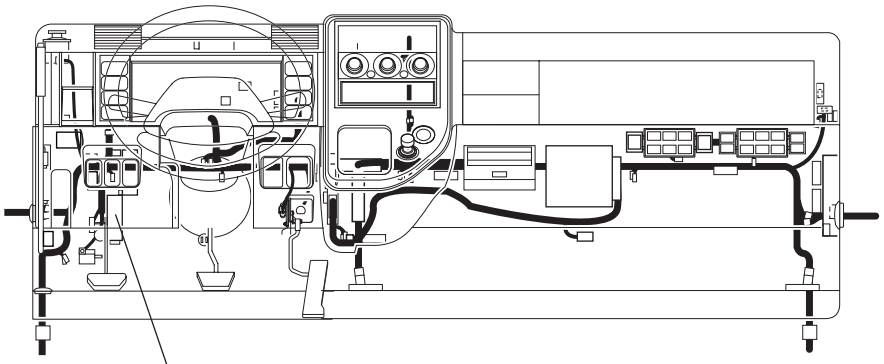

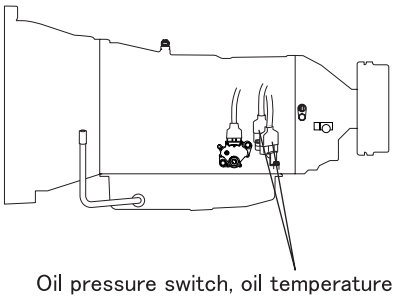

P103560-2

[Fault diagnosis]

- Perform checks in the sequence of the following steps.

Step 1	Inspection items		Inspection by control data
	Maintenance item		**<Multi-Use Tester not used>** Go to step 2. **<Multi-Use Tester used>** Measure item No. 35 “Linear Sol Press 3” of Service Data.
	Inspection condition		Engine in operation <When shifting from N to D> With the brake pedal pressed down, shift the range selector lever (from N to D). <In lock-up state> • Item No. 13 “A/T Oil Temp (OP)” indicates 25°C {77°F} or higher. • Lock-up speed (6th gear, accelerator pedal fully pressed down): 73 to 75 km/h {45.4 to 46.6 mph}
	Requirements		• When shifting from N to D: Varies • In lock-up state: 100 lbf/in^2
	Inspection result (Is the judging standard satisfied?)	YES	Go to transient fault (See Gr00.).
		NO	Go to step 2.

Step 2	Inspection items		Inspection by control data
	Maintenance item		**<Multi-Use Tester not used>** Measure value of voltage between connector (CY31A) terminal No. 11 (+) and connector (CY24A) terminal No. 8 (–). **<Multi-Use Tester used>** Measure item No. 67 “Oil Press SW 7” of Service Data.
	Inspection condition		Engine in operation **<Multi-Use Tester not used>** Measure from back side of harness connector with electronic control unit connected to harness.
	Requirements		**<Multi-Use Tester not used>** When shifting N to D: 12 V → 0 V → 12 V **<Multi-Use Tester used>** When shifting N to D: OFF → ON → OFF
	Inspection result (Is the judging standard satisfied?)	YES	Go to transient fault (See Gr00.).
		NO	Go to step 3.

Step 3	Inspection items		Inspection by electronic control unit connector (signal)
	Maintenance item		Measure value of resistance between connector (CY31A) terminal No. 5 and 4.
	Inspection condition		• Disconnect electronic control unit and harness, and measure from connection side of harness connector. • Starter switch: OFF
	Requirements		5.5 ± 0.5 Ω
	Inspection result (Is the judging standard satisfied?)	YES	Go to step 4.
		NO	Go to step 5.

Step 4	Inspection items		Inspection of electronic control unit connector
	Maintenance item		Inspection of connector
	Inspection condition		–
	Requirements		• Connector is properly connected. • No trace of water entry is found. • No corrosion is found in terminal. • Connection to terminal is appropriate.
	Inspection result (Is the judging standard satisfied?)	YES	Go to step 9.
		NO	Modify connector.

Step 5	Inspection items		Inspection of solenoid connector
	Maintenance item		Inspection of connector
	Inspection condition		–
	Requirements		• Connector is properly connected. • No trace of water entry is found. • No corrosion is found in terminal. • Connection to terminal is appropriate.
	Inspection result (Is the judging standard satisfied?)	YES	Go to step 6.
		NO	Modify connector.

Step 6	Inspection items		Inspection of solenoid unit
	Maintenance item		Measure value of resistance between connector (ET10A) terminal No. 4 and 9.
	Inspection condition		• Disconnect connector, and measure solenoid side terminal. • Starter switch: OFF
	Requirements		5.5 ± 0.5 Ω
	Inspection result (Is the judging standard satisfied?)	YES	Go to step 7.
		NO	Replacement of automatic transmission

<Step 6 inspection diagram>

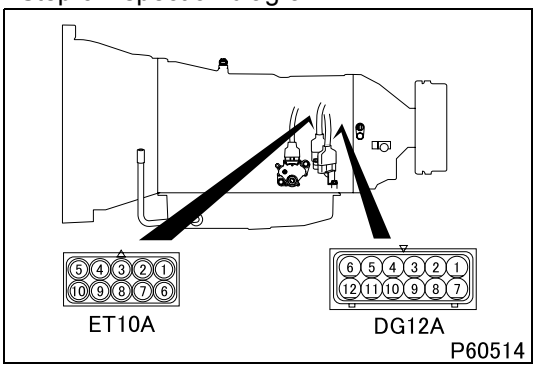

Step 7	Inspection items		Inspection of harness between solenoid and electronic control unit (power supply)
	Maintenance item		Check circuit between connector (ET10A) terminal No. 4 and electronic control unit connector (CY31A) terminal No. 5.
	Inspection condition		Disconnect each device from harness and measure from connection side of harness connector.
	Requirements		There is continuity.
	Inspection result (Is the judging standard satisfied?)	YES	Go to step 8.
		NO	Modify harness.

Step 8	Inspection items		Inspection of harness between solenoid and electronic control unit (ground)
	Maintenance item		Check circuit between connector (ET10A) terminal No. 9 and electronic control unit connector (CY31A) terminal No. 4.
	Inspection condition		Disconnect each device from harness and measure from connection side of harness connector.
	Requirements		There is continuity.
	Inspection result (Is the judging standard satisfied?)	YES	Go to step 9.
		NO	Modify harness.

Step 9	Inspection items		Inspection by control data
	Maintenance item		**<Multi-Use Tester not used>** Check for recurrence of the same diagnosis code. **<Multi-Use Tester used>** Measure item No. 35 “Linear Sol Press 3” of Service Data.
	Inspection condition		Engine in operation <When shifting from N to D> With the brake pedal pressed down, shift the range selector lever (from N to D). <In lock-up state> • Item No. 13 “A/T Oil Temp (OP)” indicates 25°C {77°F} or higher. • Lock-up speed (6th gear, accelerator pedal fully pressed down): 73 to 75 km/h {45.4 to 46.6 mph}
	Requirements		**<Multi-Use Tester not used>** If the same diagnosis code occurs, replace electronic control unit. **<Multi-Use Tester used>** • When shifting from N to D: Varies • In lock-up state: 100 lbf/in^2
	Inspection result (Is the judging standard satisfied?)	YES	Go to transient fault (See Gr00.).
		NO	Replacement of electronic control unit

Step 10	Inspection items		Inspection by control data
	Maintenance item		**<Multi-Use Tester not used>** Measure value of voltage between connector (CY31A) terminal No.11 (+) and connector (CY24A) terminal No. 8 (–). **<Multi-Use Tester used>** Measure item No. 67 “Oil Press SW 7” of Service Data.
	Inspection condition		Engine in operation **<Multi-Use Tester not used>** Measure from back side of harness connector with electronic control unit connected to harness.
	Requirements		**<Multi-Use Tester not used>** When shifting N to D: 12 V → 0 V → 12 V **<Multi-Use Tester used>** When shifting N to D: OFF → ON → OFF
	Inspection result (Is the judging standard satisfied?)	YES	Go to transient fault (See Gr00.).
		NO	• Check if a diagnosis code related to the oil pressure switch 7 occurs. If it does, perform troubleshooting of the code. • Replacement of electronic control unit

[Fault code]
Diagnosis code: P083D/Flash code: 48
[Monitor ID]
48
[Fault (outline)]
Failure of oil pressure switch 7
[Diagnosis check]
- With the oil pressure switch 6 turned ON (gain change solenoid ON), oil pressure switch 7 is monitored for fault when the linear solenoid 3 is deenergized (low pressure).

[Code generation condition]
- Oil pressure switch 7 remains ON (high pressure) for 0.18 second.

[Diagnosis check timing]
- Fault diagnosis is performed each time when the control is activated.

[Diagnostic requirement]
- Oil pressure switch 6: ON
- Linear solenoid 3 is low pressure

[Control effected by electronic control unit during fault]
- Lockup control is turned OFF
- Control is effected on fixed speed gear output (2nd).

[Probable cause of trouble]
- Open-circuit or short-circuit of harness between electronic control unit and oil pressure switch 7 or linear solenoid 3
- Malfunction of each connector
- Malfunction of oil pressure switch 7 or linear solenoid 3
- Malfunction of electronic control unit

[Recoverability]
- Recovered if signal becomes normal when starter switch is turned OFF to ON (power supply resumed to electronic control unit).

[Electronic Control Unit Connection Diagram]

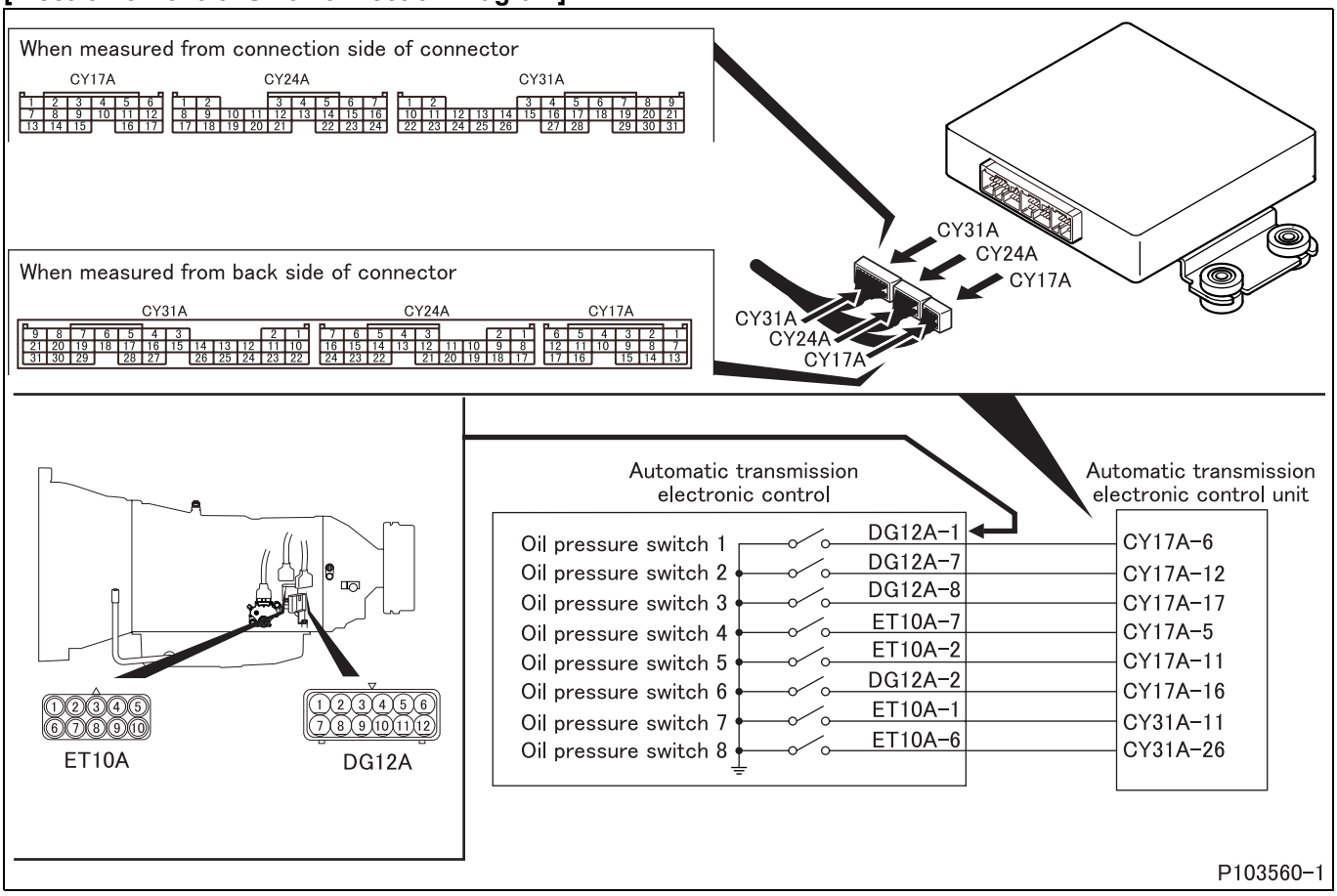

P103560-1

[Parts Identification and Location]

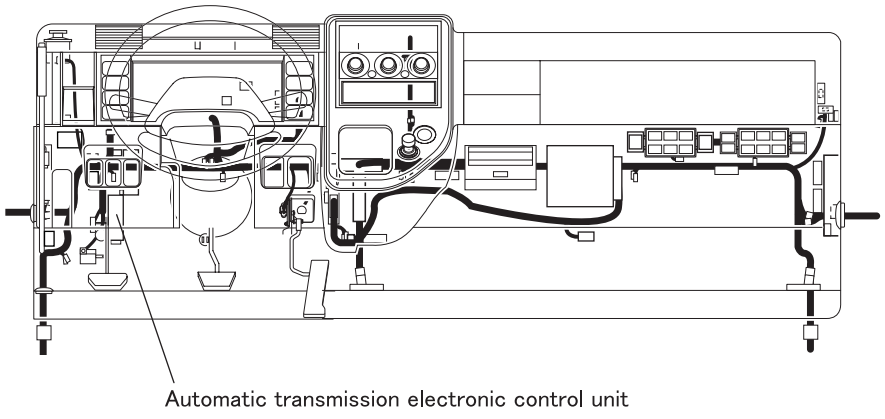

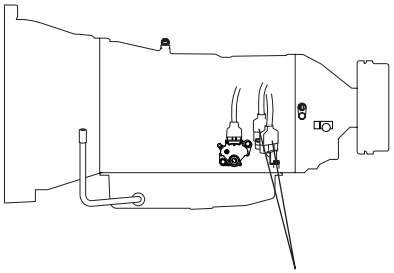

P103560-2

[Fault diagnosis]

- Perform checks in the sequence of the following steps.

Step 1	Inspection items		Inspection by control data
	Maintenance item		**<Multi-Use Tester not used>** Measure value of voltage between connector (CY31A) terminal No. 11 (+) and connector (CY24A) terminal No. 8 (–). **<Multi-Use Tester used>** Measure item No. 67 “Oil Press SW 7” of Service Data.
	Inspection condition		Engine in operation **<Multi-Use Tester not used>** Measure from back side of harness connector with electronic control unit connected to harness.
	Requirements		**<Multi-Use Tester not used>** When shifting from N to D: 12 V → 0 V → 12 V **<Multi-Use Tester used>** When shifting from N to D: OFF → ON → OFF
	Inspection result (Is the judging standard satisfied?)	YES	Go to transient fault (See Gr00.).
		NO	Go to step 2.

Step 2	Inspection items		Inspection by electronic control unit connector (signal)
	Maintenance item		Measure continuity between connector (CY31A) terminal No. 11 and chassis ground.
	Inspection condition		• Disconnect electronic control unit and harness, and measure from connection side of harness connector. • Starter switch: OFF
	Requirements		There is no continuity.
	Inspection result (Is the judging standard satisfied?)	YES	Go to step 3.
		NO	Go to step 4.

Step 3	Inspection items		Inspection of electronic control unit connector
	Maintenance item		Inspection of connector
	Inspection condition		–
	Requirements		• Connector is properly connected. • No trace of water entry is found. • No corrosion is found in terminal. • Connection to terminal is appropriate.
	Inspection result (Is the judging standard satisfied?)	YES	Go to step 7.
		NO	Modify connector.

Step 4	Inspection items		Inspection of switch connector
	Maintenance item		Inspection of connector
	Inspection condition		–
	Requirements		• Connector is properly connected. • No trace of water entry is found. • No corrosion is found in terminal. • Connection to terminal is appropriate.
	Inspection result (Is the judging standard satisfied?)	YES	Go to step 5.
		NO	Modify connector.

Step 5	Inspection items		Inspection of switch unit
	Maintenance item		Check continuity between connector (ET10A) terminal No. 1 and automatic transmission case.
	Inspection condition		• Disconnect connector, and measure switch side terminal. • Starter switch: OFF
	Requirements		There is no continuity.
	Inspection result (Is the judging standard satisfied?)	YES	Go to step 6.
		NO	Replacement of automatic transmission

<Step 5 inspection diagram>

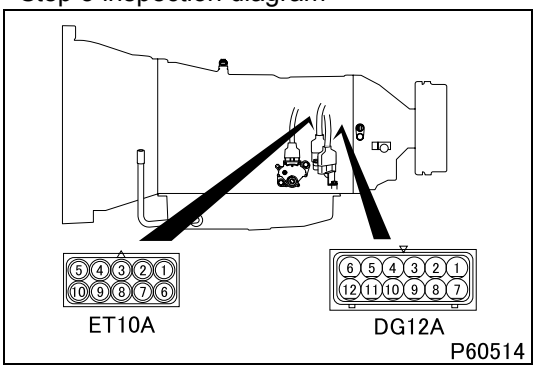

Step 6	Inspection items		Inspection of harness between switch and electronic control unit (signal)
	Maintenance item		Check circuit between connector (ET10A) terminal No. 1 and electronic control unit connector (CY31A) terminal No. 11.
	Inspection condition		Disconnect each device from harness and measure from connection side of harness connector.
	Requirements		There is continuity.
	Inspection result (Is the judging standard satisfied?)	YES	Go to step 7.
		NO	Modify harness.

Step 7	Inspection items		Inspection by control data
	Maintenance item		**<Multi-Use Tester not used>** Measure value of voltage between connector (CY31A) terminal No. 11 (+) and connector (CY24A) terminal No. 8 (–). **<Multi-Use Tester used>** Measure item No. 67 “Oil Press SW 7” of Service Data.
	Inspection condition		Engine in operation **<Multi-Use Tester not used>** Measure from back side of harness connector with electronic control unit connected to harness.
	Requirements		**<Multi-Use Tester not used>** When shifting from N to D: 12 V → 0 V → 12 V **<Multi-Use Tester used>** When shifting from N to D: OFF → ON → OFF
	Inspection result (Is the judging standard satisfied?)	YES	Go to transient fault (See Gr00.).
		NO	• Check if a diagnosis code related to the linear solenoid 3 occurs. If it does, perform troubleshooting of the code. • Replacement of electronic control unit

[Fault code]
Diagnosis code: P0842/Flash code: 41
[Monitor ID]
37
[Fault (outline)]
Failure of oil pressure switch 1
[Diagnosis check]
- Oil pressure switch 1 is monitored for fault when the linear solenoid 1 is energized (high pressure).

[Code generation condition]
- Oil pressure switch 1 is judged faulty when the oil pressure switch 1 remains OFF (low pressure) for 2 seconds, then N, R or P range is selected and the oil pressure switch 8 remains OFF for 0.5 second (check if stuck ON).

[Diagnosis check timing]
- Fault diagnosis is performed each time when the control is activated.

[Diagnostic requirement]
- Oil pressure switch 8: ON
- Shift position: D, 3 or 2 range
- Linear solenoid 1 is high pressure

[Control effected by electronic control unit during fault]
- Lockup control is turned OFF
- Control is effected on fixed speed gear output (3rd).

[Probable cause of trouble]
- Open-circuit or short-circuit of harness between electronic control unit and oil pressure switch 1 or linear solenoid 1
- Malfunction of each connector
- Malfunction of oil pressure switch 1 or linear solenoid 1
- Malfunction of electronic control unit

[Recoverability]
- Recovered if signal becomes normal when starter switch is turned OFF to ON (power supply resumed to electronic control unit).

[Electronic Control Unit Connection Diagram]

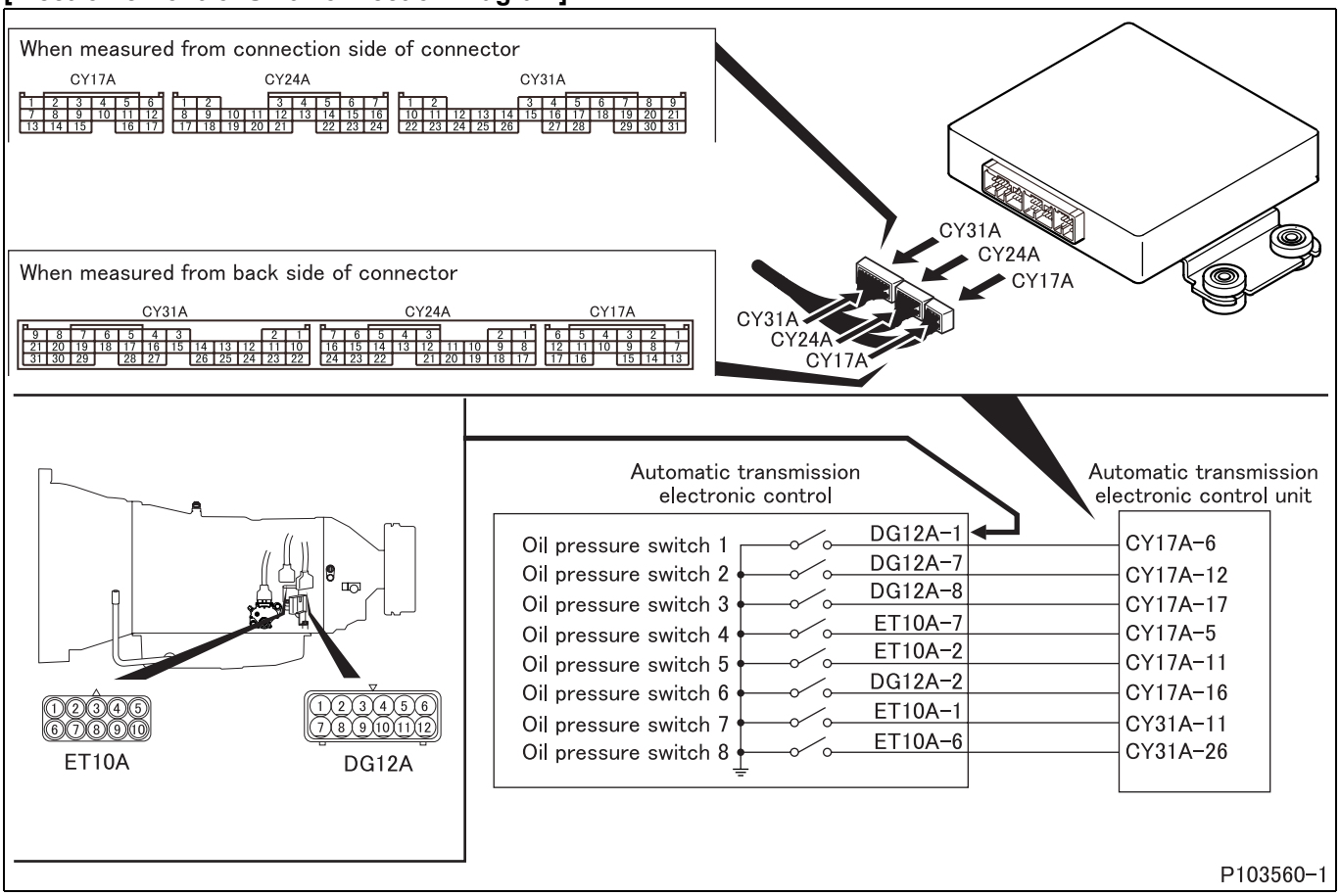

[Parts Identification and Location]

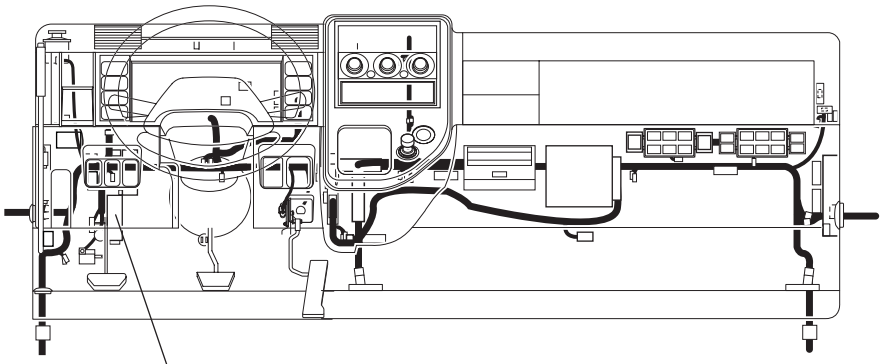

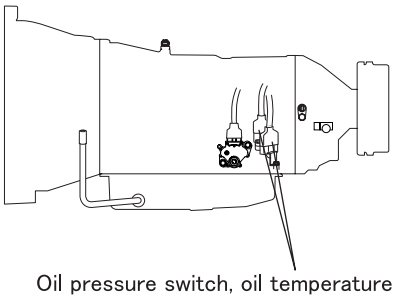

P103560-2

[Fault diagnosis]

- Perform checks in the sequence of the following steps.

Step 1	Inspection items		Inspection by control data
	Maintenance item		**<Multi-Use Tester not used>** Measure value of voltage between connector (CY17A) terminal No. 6 (+) and connector (CY24A) terminal No. 8 (–). **<Multi-Use Tester used>** Measure item No. 61 “Oil Press SW 1” of Service Data.
	Inspection condition		Engine in operation **<Multi-Use Tester not used>** Measure from back side of harness connector with electronic control unit connected to harness.
	Requirements		**<Multi-Use Tester not used>** • In 2nd, 4th, 6th gears: 0 V • In 1st, 3rd, 5th gears: 12 V **<Multi-Use Tester used>** • In 2nd, 4th, 6th gears: ON • In 1st, 3rd, 5th gears: OFF
	Inspection result (Is the judging standard satisfied?)	YES	Go to transient fault (See Gr00.).
		NO	Go to step 2.

Step 2	Inspection items		Inspection by electronic control unit connector (signal)
	Maintenance item		Measure continuity between connector (CY17A) terminal No. 6 and chassis ground.
	Inspection condition		• Disconnect electronic control unit and harness, and measure from connection side of harness connector. • Starter switch: OFF
	Requirements		There is no continuity.
	Inspection result (Is the judging standard satisfied?)	YES	Go to step 3.
		NO	Go to step 4.

Step 3	Inspection items		Inspection of electronic control unit connector
	Maintenance item		Inspection of connector
	Inspection condition		–
	Requirements		• Connector is properly connected. • No trace of water entry is found. • No corrosion is found in terminal. • Connection to terminal is appropriate.
	Inspection result (Is the judging standard satisfied?)	YES	Go to step 7.
		NO	Modify connector.

Step 4	Inspection items		Inspection of switch connector
	Maintenance item		Inspection of connector
	Inspection condition		–
	Requirements		• Connector is properly connected. • No trace of water entry is found. • No corrosion is found in terminal. • Connection to terminal is appropriate.
	Inspection result (Is the judging standard satisfied?)	YES	Go to step 5.
		NO	Modify connector.

Step 5	Inspection items		Inspection of switch unit
	Maintenance item		Check continuity between connector (DG12A) terminal No. 1 and automatic transmission case.
	Inspection condition		• Disconnect connector, and measure switch side terminal. • Starter switch: OFF
	Requirements		There is no continuity.
	Inspection result (Is the judging standard satisfied?)	YES	Go to step 6.
		NO	Replacement of automatic transmission

<Step 5 inspection diagram>

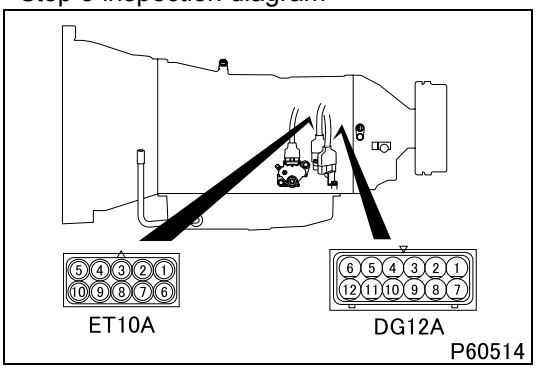

Step 6	Inspection items		Inspection of harness between switch and electronic control unit (signal)
	Maintenance item		Check circuit between connector (DG12A) terminal No. 1 and electronic control unit connector (CY17A) terminal No. 6.
	Inspection condition		Disconnect each device from harness and measure from connection side of harness connector.
	Requirements		There is continuity.
	Inspection result (Is the judging standard satisfied?)	YES	Go to step 7.
		NO	Modify harness.

Step 7	Inspection items		Inspection by control data
	Maintenance item		**<Multi-Use Tester not used>** Measure value of voltage between connector (CY17A) terminal No. 6 (+) and connector (CY24A) terminal No. 8 (–). **<Multi-Use Tester used>** Measure item No. 61 “Oil Press SW 1” of Service Data.
	Inspection condition		Engine in operation **<Multi-Use Tester not used>** Measure from back side of harness connector with electronic control unit connected to harness.
	Requirements		**<Multi-Use Tester not used>** • In 2nd, 4th, 6th gears: 0 V • In 1st, 3rd, 5th gears: 12 V **<Multi-Use Tester used>** • In 2nd, 4th, 6th gears: ON • In 1st, 3rd, 5th gears: OFF
	Inspection result (Is the judging standard satisfied?)	YES	Go to transient fault (See Gr00.).
		NO	• Check if a diagnosis code related to the linear solenoid 1 occurs. If it does, perform troubleshooting of the code. • Replacement of electronic control unit

[Fault code]
Diagnosis code: P0843/Flash code: 41
[Monitor ID]
36
[Fault (outline)]
Failure of oil pressure switch 1
[Diagnosis check]
- Oil pressure switch 1 is monitored for fault when the linear solenoid 1 is deenergized (low pressure).

[Code generation condition]
- Oil pressure switch 1 remains ON (high pressure) for 0.1 second.

[Diagnosis check timing]
- Fault diagnosis is performed each time when the control is activated.

[Diagnostic requirement]
- Linear solenoid 1 is low pressure

[Control effected by electronic control unit during fault]
- Lockup control is turned OFF
- Control is effected on fixed speed gear output (4th).

[Probable cause of trouble]
- Open-circuit or short-circuit of harness between electronic control unit and oil pressure switch 1 or linear solenoid 1
- Malfunction of each connector
- Malfunction of oil pressure switch 1 or linear solenoid 1
- Malfunction of electronic control unit

[Recoverability]
- Recovered if signal becomes normal when starter switch is turned OFF to ON (power supply resumed to electronic control unit).

[Electronic Control Unit Connection Diagram]

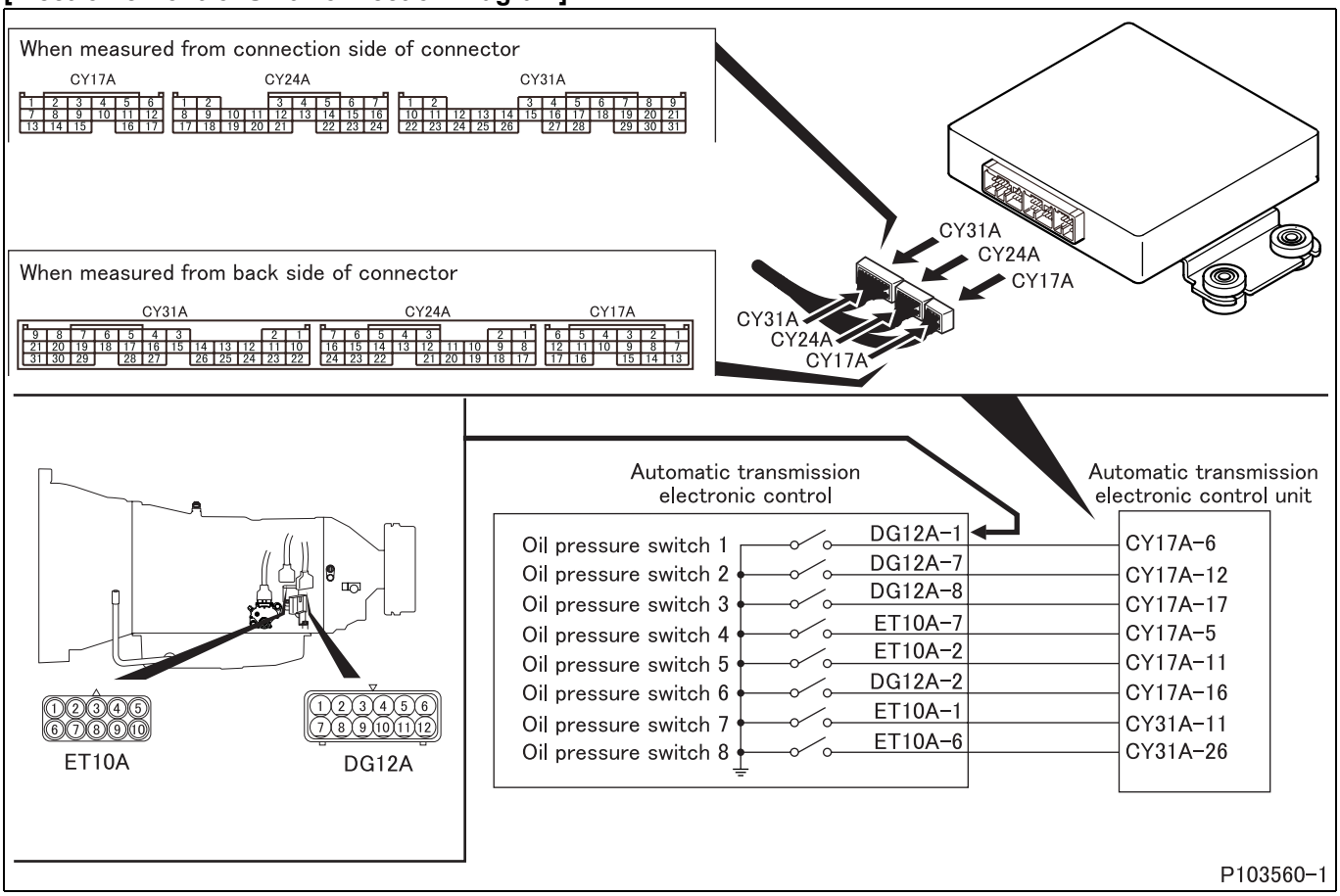

P103560-1

[Parts Identification and Location]

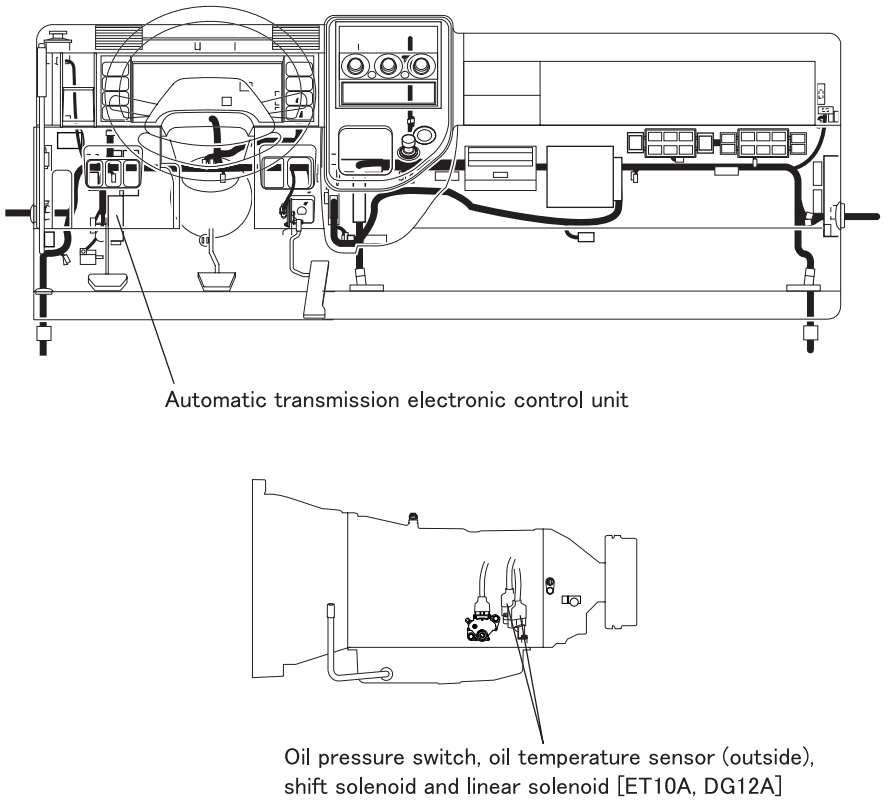

P103560-2

[Fault diagnosis]

- Perform checks in the sequence of the following steps.

Step 1	Inspection items		Inspection by control data
	Maintenance item		**<Multi-Use Tester not used>** Measure value of voltage between connector (CY17A) terminal No. 6 (+) and connector (CY24A) terminal No. 8 (–). **<Multi-Use Tester used>** Measure item No. 61 “Oil Press SW 1” of Service Data.
	Inspection condition		Engine in operation **<Multi-Use Tester not used>** Measure from back side of harness connector with electronic control unit connected to harness.
	Requirements		**<Multi-Use Tester not used>** • In 2nd, 4th, 6th gears: 0 V • In 1st, 3rd, 5th gears: 12 V **<Multi-Use Tester used>** • In 2nd, 4th, 6th gears: ON • In 1st, 3rd, 5th gears: OFF
	Inspection result (Is the judging standard satisfied?)	YES	Go to transient fault (See Gr00.).
		NO	Go to step 2.

Step 2	Inspection items		Inspection by electronic control unit connector (signal)
	Maintenance item		Measure continuity between connector (CY17A) terminal No. 6 and chassis ground.
	Inspection condition		• Disconnect electronic control unit and harness, and measure from connection side of harness connector. • Starter switch: OFF
	Requirements		There is no continuity.
	Inspection result (Is the judging standard satisfied?)	YES	Go to step 3.
		NO	Go to step 4.

Step 3	Inspection items		Inspection of electronic control unit connector
	Maintenance item		Inspection of connector
	Inspection condition		–
	Requirements		• Connector is properly connected. • No trace of water entry is found. • No corrosion is found in terminal. • Connection to terminal is appropriate.
	Inspection result (Is the judging standard satisfied?)	YES	Go to step 7.
		NO	Modify connector.

Step 4	Inspection items		Inspection of switch connector
	Maintenance item		Inspection of connector
	Inspection condition		–
	Requirements		• Connector is properly connected. • No trace of water entry is found. • No corrosion is found in terminal. • Connection to terminal is appropriate.
	Inspection result (Is the judging standard satisfied?)	YES	Go to step 5.
		NO	Modify connector.

Step 5	Inspection items		Inspection of switch unit
	Maintenance item		Check continuity between connector (DG12A) terminal No. 1 and automatic transmission case.
	Inspection condition		• Disconnect connector, and measure switch side terminal. • Starter switch: OFF
	Requirements		There is no continuity.
	Inspection result (Is the judging standard satisfied?)	YES	Go to step 6.
		NO	Replacement of automatic transmission

<Step 5 inspection diagram>

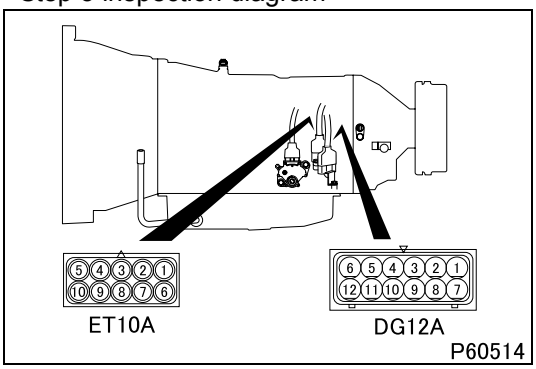

Step 6	Inspection items		Inspection of harness between switch and electronic control unit (signal)
	Maintenance item		Check circuit between connector (DG12A) terminal No. 1 and electronic control unit connector (CY17A) terminal No. 6.
	Inspection condition		Disconnect each device from harness and measure from connection side of harness connector.
	Requirements		There is continuity.
	Inspection result (Is the judging standard satisfied?)	YES	Go to step 7.
		NO	Modify harness.

Step 7	Inspection items		Inspection by control data
	Maintenance item		**<Multi-Use Tester not used>** Measure value of voltage between connector (CY17A) terminal No. 6 (+) and connector (CY24A) terminal No. 8 (–). **<Multi-Use Tester used>** Measure item No. 61 “Oil Press SW 1” of Service Data.
	Inspection condition		Engine in operation **<Multi-Use Tester not used>** Measure from back side of harness connector with electronic control unit connected to harness.
	Requirements		**<Multi-Use Tester not used>** • In 2nd, 4th, 6th gears: 0 V • In 1st, 3rd, 5th gears: 12 V **<Multi-Use Tester used>** • In 2nd, 4th, 6th gears: ON • In 1st, 3rd, 5th gears: OFF
	Inspection result (Is the judging standard satisfied?)	YES	Go to transient fault (See Gr00.).
		NO	• Check if a diagnosis code related to the linear solenoid 1 occurs. If it does, perform troubleshooting of the code. • Replacement of electronic control unit

[Fault code]
Diagnosis code: P0847/Flash code: 42
[Monitor ID]
42
[Fault (outline)]
Failure of oil pressure switch 2
[Diagnosis check]
- Oil pressure switch 2 is monitored for fault when the linear solenoid 2 is energized (high pressure).

[Code generation condition]
- Oil pressure switch 2 remains OFF (low pressure) for 2 seconds.

[Diagnosis check timing]
- Fault diagnosis is performed each time when the control is activated.

[Diagnostic requirement]
- Linear solenoid 2 is high pressure

[Control effected by electronic control unit during fault]
- Lockup control is turned OFF
- Control is effected on fixed speed gear output (4th).

[Probable cause of trouble]
- Open-circuit or short-circuit of harness between electronic control unit and oil pressure switch 2 or linear solenoid 2
- Malfunction of each connector
- Malfunction of oil pressure switch 2 or linear solenoid 2
- Malfunction of electronic control unit

[Recoverability]
- Recovered if signal becomes normal when starter switch is turned OFF to ON (power supply resumed to electronic control unit).

[Electronic Control Unit Connection Diagram]

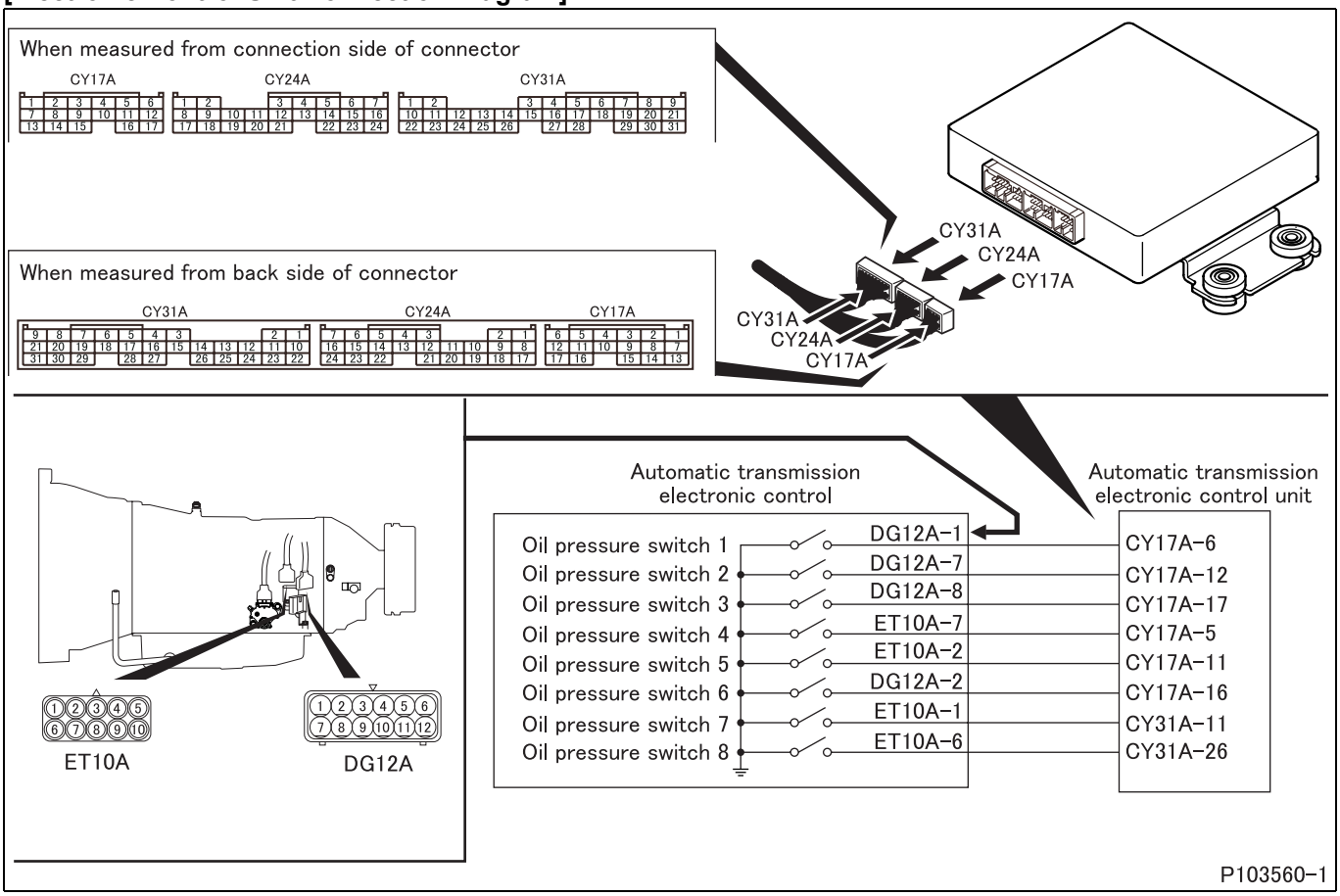

P103560-1

[Parts Identification and Location]

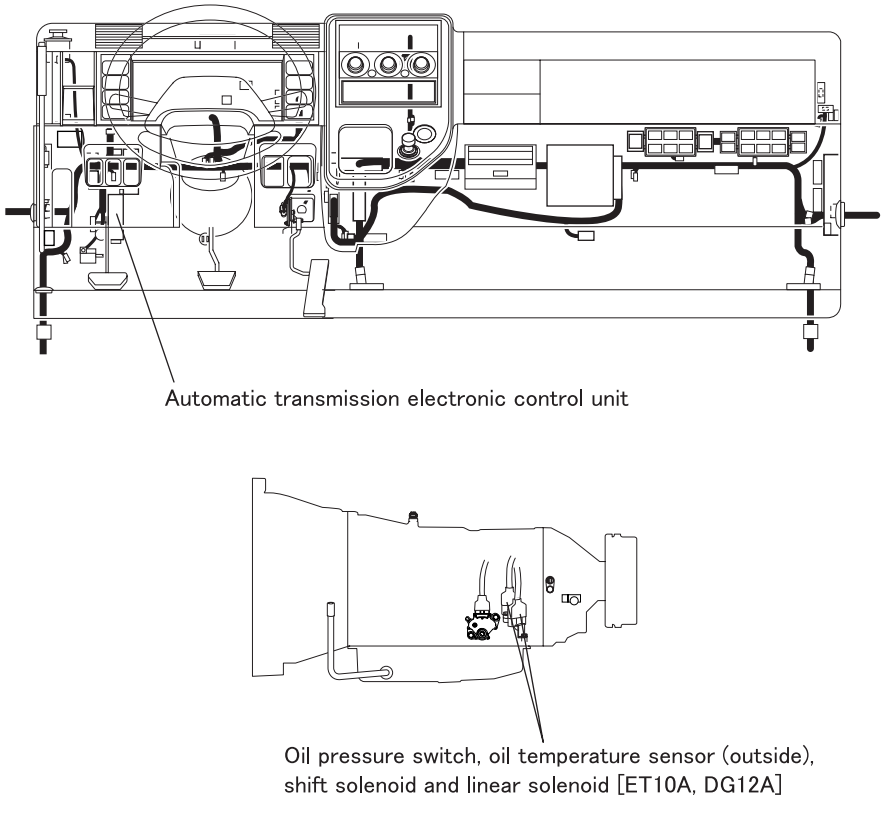

P103560-2

[Fault diagnosis]

- Perform checks in the sequence of the following steps.

Step 1	Inspection items		Inspection by control data
	Maintenance item		**<Multi-Use Tester not used>** Measure value of voltage between connector (CY17A) terminal No. 12 (+) and connector (CY24A) terminal No. 8 (–). **<Multi-Use Tester used>** Measure item No. 62 “Oil Press SW 2” of Service Data.
	Inspection condition		Engine in operation **<Multi-Use Tester not used>** Measure from back side of harness connector with electronic control unit connected to harness.
	Requirements		**<Multi-Use Tester not used>** • In 1st, 3rd, 5th gears: 0 V • In 2nd, 4th, 6th gears: 12 V **<Multi-Use Tester used>** • In 1st, 3rd, 5th gears: ON • In 2nd, 4th, 6th gears: OFF
	Inspection result (Is the judging standard satisfied?)	YES	Go to transient fault (See Gr00.).
		NO	Go to step 2.

Step 2	Inspection items		Inspection by electronic control unit connector (signal)
	Maintenance item		Measure continuity between connector (CY17A) terminal No. 12 and chassis ground.
	Inspection condition		• Disconnect electronic control unit and harness, and measure from connection side of harness connector. • Starter switch: OFF
	Requirements		There is no continuity.
	Inspection result (Is the judging standard satisfied?)	YES	Go to step 3.
		NO	Go to step 4.

Step 3	Inspection items		Inspection of electronic control unit connector
	Maintenance item		Inspection of connector
	Inspection condition		–
	Requirements		• Connector is properly connected. • No trace of water entry is found. • No corrosion is found in terminal. • Connection to terminal is appropriate.
	Inspection result (Is the judging standard satisfied?)	YES	Go to step 7.
		NO	Modify connector.

Step 4	Inspection items		Inspection of switch connector
	Maintenance item		Inspection of connector
	Inspection condition		–
	Requirements		• Connector is properly connected. • No trace of water entry is found. • No corrosion is found in terminal. • Connection to terminal is appropriate.
	Inspection result (Is the judging standard satisfied?)	YES	Go to step 5.
		NO	Modify connector.

Step 5	Inspection items		Inspection of switch unit
	Maintenance item		Check continuity between connector (DG12A) terminal No. 7 and automatic transmission case.
	Inspection condition		• Disconnect connector, and measure switch side terminal. • Starter switch: OFF
	Requirements		There is no continuity.
	Inspection result (Is the judging standard satisfied?)	YES	Go to step 6.
		NO	Replacement of automatic transmission

<Step 5 inspection diagram>

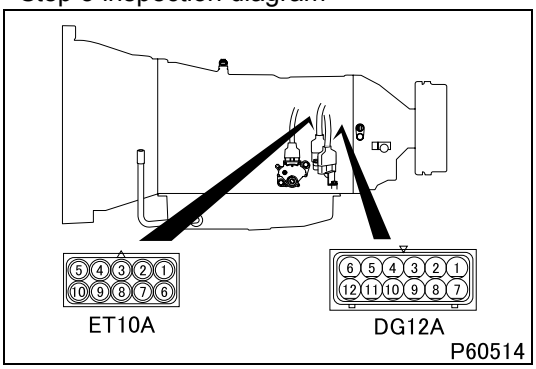

Step 6	Inspection items		Inspection of harness between switch and electronic control unit (signal)
	Maintenance item		Check circuit between connector (DG12A) terminal No. 7 and electronic control unit connector (CY17A) terminal No. 12.
	Inspection condition		Disconnect each device from harness and measure from connection side of harness connector.
	Requirements		There is continuity.
	Inspection result (Is the judging standard satisfied?)	YES	Go to step 7.
		NO	Modify harness.

Step 7	Inspection items		Inspection by control data
	Maintenance item		**<Multi-Use Tester not used>** Measure value of voltage between connector (CY17A) terminal No. 12 (+) and connector (CY24A) terminal No. 8 (–). **<Multi-Use Tester used>** Measure item No. 62 “Oil Press SW 2” of Service Data.
	Inspection condition		Engine in operation **<Multi-Use Tester not used>** Measure from back side of harness connector with electronic control unit connected to harness.
	Requirements		**<Multi-Use Tester not used>** • In 1st, 3rd, 5th gears: 0 V • In 2nd, 4th, 6th gears: 12 V **<Multi-Use Tester used>** • In 1st, 3rd, 5th gears: ON • In 2nd, 4th, 6th gears: OFF
	Inspection result (Is the judging standard satisfied?)	YES	Go to transient fault (See Gr00.).
		NO	• Check if a diagnosis code related to the linear solenoid 2 occurs. If it does, perform troubleshooting of the code. • Replacement of electronic control unit

[Fault code]
Diagnosis code: P0848/Flash code: 42
[Monitor ID]
41
[Fault (outline)]
Failure of oil pressure switch 2
[Diagnosis check]
- Oil pressure switch 2 is monitored for fault when the linear solenoid 2 is deenergized (low pressure).

[Code generation condition]
- Oil pressure switch 2 remains ON (high pressure) for 0.1 second.

[Diagnosis check timing]
- Fault diagnosis is performed each time when the control is activated.

[Diagnostic requirement]
- Linear solenoid 2 is low pressure

[Control effected by electronic control unit during fault]
- Lockup control is turned OFF
- Control is effected on fixed speed gear output (3rd).

[Probable cause of trouble]
- Open-circuit or short-circuit of harness between electronic control unit and oil pressure switch 2 or linear solenoid 2
- Malfunction of each connector
- Malfunction of oil pressure switch 2 or linear solenoid 2
- Malfunction of electronic control unit

[Recoverability]
- Recovered if signal becomes normal when starter switch is turned OFF to ON (power supply resumed to electronic control unit).

[Electronic Control Unit Connection Diagram]

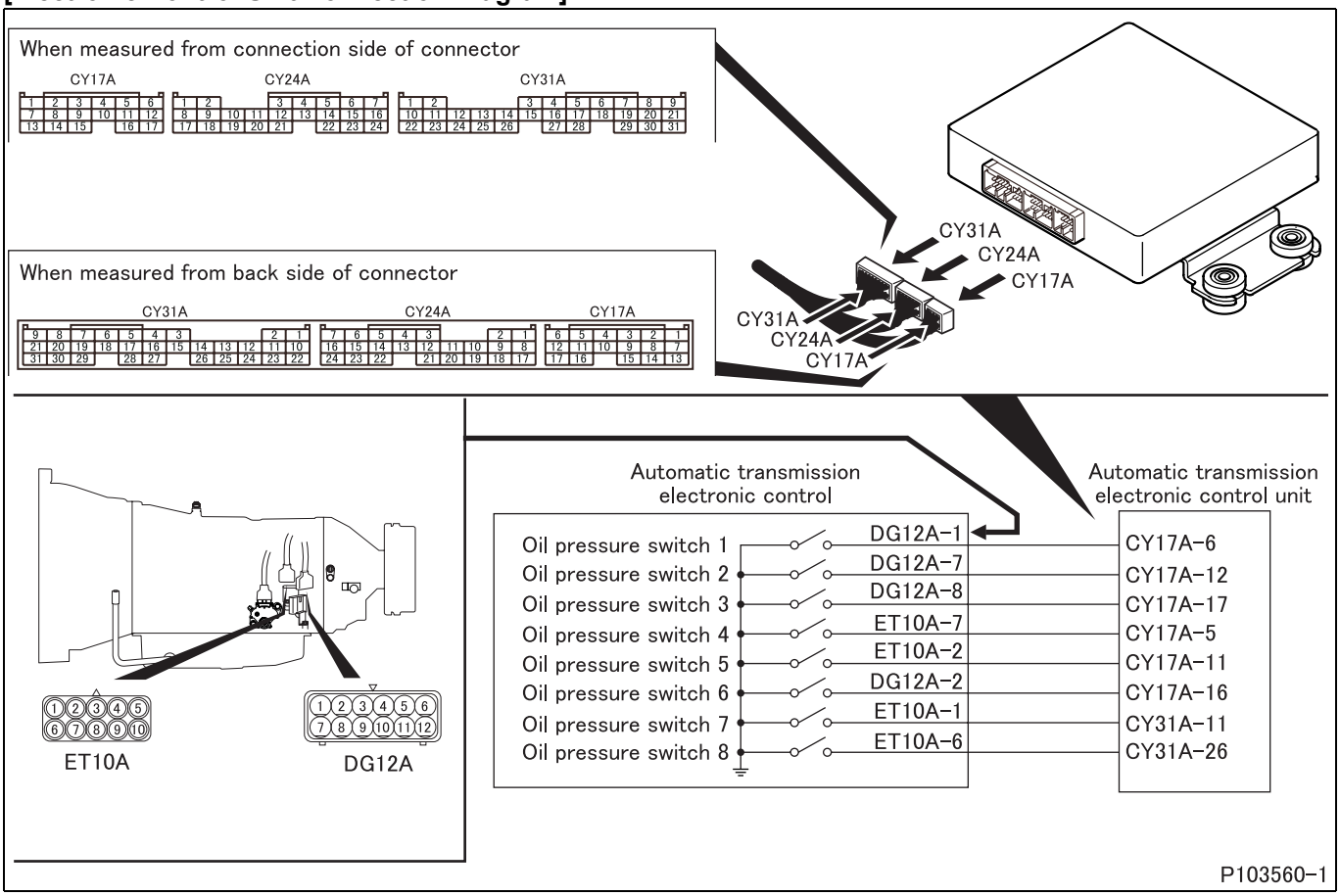

P103560-1

[Parts Identification and Location]

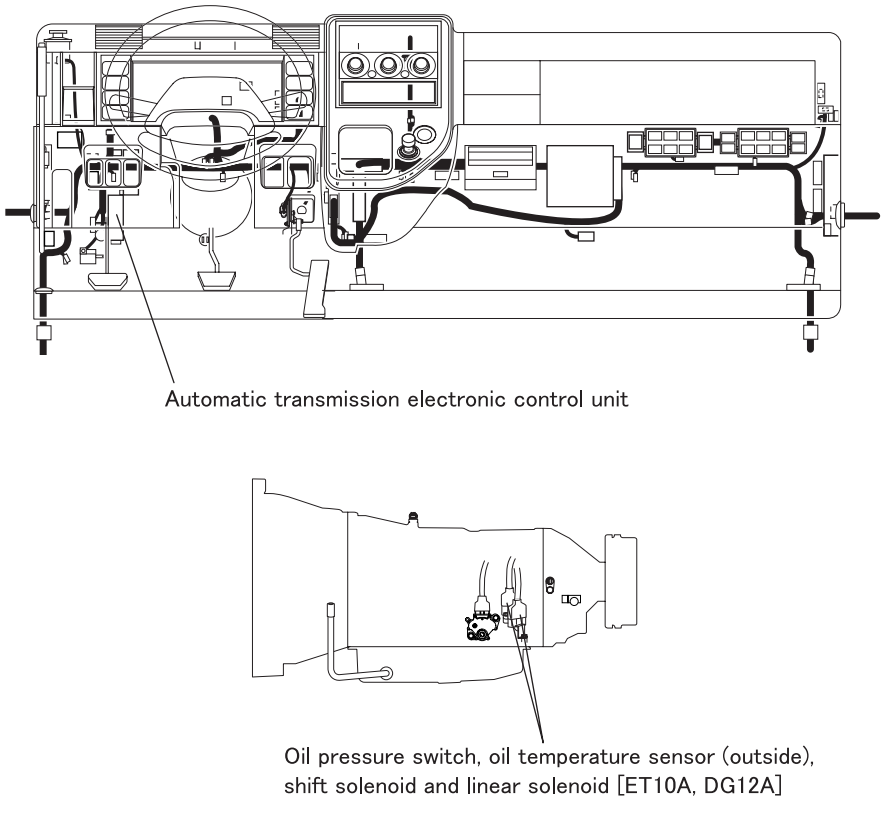

P103560-2

[Fault diagnosis]

- Perform checks in the sequence of the following steps.

Step 1	Inspection items		Inspection by control data
	Maintenance item		**<Multi-Use Tester not used>** Measure value of voltage between connector (CY17A) terminal No. 12 (+) and connector (CY24A) terminal No. 8 (–). **<Multi-Use Tester used>** Measure item No. 62 “Oil Press SW 2” of Service Data.
	Inspection condition		Engine in operation **<Multi-Use Tester not used>** Measure from back side of harness connector with electronic control unit connected to harness.
	Requirements		**<Multi-Use Tester not used>** • In 1st, 3rd, 5th gears: 0 V • In 2nd, 4th, 6th gears: 12 V **<Multi-Use Tester used>** • In 1st, 3rd, 5th gears: ON • In 2nd, 4th, 6th gears: OFF
	Inspection result (Is the judging standard satisfied?)	YES	Go to transient fault (See Gr00.).
		NO	Go to step 2.

Step 2	Inspection items		Inspection by electronic control unit connector (signal)
	Maintenance item		Measure continuity between connector (CY17A) terminal No. 12 and chassis ground.
	Inspection condition		• Disconnect electronic control unit and harness, and measure from connection side of harness connector. • Starter switch: OFF
	Requirements		There is no continuity.
	Inspection result (Is the judging standard satisfied?)	YES	Go to step 3.
		NO	Go to step 4.

Step 3	Inspection items		Inspection of electronic control unit connector
	Maintenance item		Inspection of connector
	Inspection condition		–
	Requirements		• Connector is properly connected. • No trace of water entry is found. • No corrosion is found in terminal. • Connection to terminal is appropriate.
	Inspection result (Is the judging standard satisfied?)	YES	Go to step 7.
		NO	Modify connector.

Step 4	Inspection items		Inspection of switch connector
	Maintenance item		Inspection of connector
	Inspection condition		–
	Requirements		• Connector is properly connected. • No trace of water entry is found. • No corrosion is found in terminal. • Connection to terminal is appropriate.
	Inspection result (Is the judging standard satisfied?)	YES	Go to step 5.
		NO	Modify connector.

Step 5	Inspection items		Inspection of switch unit
	Maintenance item		Check continuity between connector (DG12A) terminal No. 7 and automatic transmission case.
	Inspection condition		• Disconnect connector, and measure switch side terminal. • Starter switch: OFF
	Requirements		There is no continuity.
	Inspection result (Is the judging standard satisfied?)	YES	Go to step 6.
		NO	Replacement of automatic transmission

<Step 5 inspection diagram>

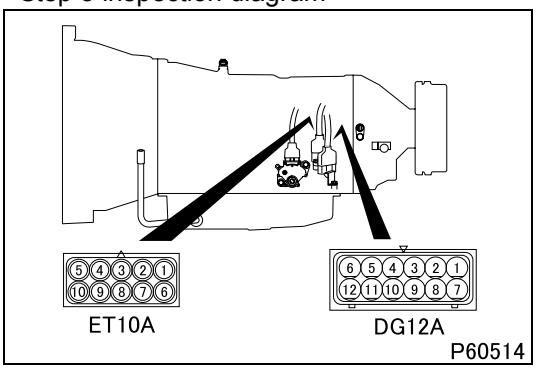

Step 6	Inspection items		Inspection of harness between switch and electronic control unit (signal)
	Maintenance item		Check circuit between connector (DG12A) terminal No. 7 and electronic control unit connector (CY17A) terminal No. 12.
	Inspection condition		Disconnect each device from harness and measure from connection side of harness connector.
	Requirements		There is continuity.
	Inspection result (Is the judging standard satisfied?)	YES	Go to step 7.
		NO	Modify harness.

Step 7	Inspection items		Inspection by control data
	Maintenance item		**<Multi-Use Tester not used>** Measure value of voltage between connector (CY17A) terminal No. 12 (+) and connector (CY24A) terminal No. 8 (–). **<Multi-Use Tester used>** Measure item No. 62 “Oil Press SW 2” of Service Data.
	Inspection condition		Engine in operation **<Multi-Use Tester not used>** Measure from back side of harness connector with electronic control unit connected to harness.
	Requirements		**<Multi-Use Tester not used>** • In 1st, 3rd, 5th gears: 0 V • In 2nd, 4th, 6th gears: 12 V **<Multi-Use Tester used>** • In 1st, 3rd, 5th gears: ON • In 2nd, 4th, 6th gears: OFF
	Inspection result (Is the judging standard satisfied?)	YES	Go to transient fault (See Gr00.).
		NO	• Check if a diagnosis code related to the linear solenoid 2 occurs. If it does, perform troubleshooting of the code. • Replacement of electronic control unit

[Fault code]
Diagnosis code: P0863/Flash code: 88
[Monitor ID]
67
[Fault (outline)]
Abnormality in controller area network communication
[Diagnosis check]
- Controller area network communication is monitored for abnormality according to the controller area network signal to be received 5 seconds after the starter switch is turned ON.

[Code generation condition]
- No controller area network signals are received for 1 second.

[Diagnosis check timing]
- Fault diagnosis is continuously performed.

[Diagnostic requirement]
- Continuous

[Control effected by electronic control unit during fault]
- Change point control and lock-up control are effected with accelerator pedal position at 0% (shift-up and lock-up vehicle speeds are switched to low side).
- Line pressure control is effected with accelerator pedal position at 100% (speed change shock occurs).
- Garage control is effected at 0% during idling and 50% otherwise (speed change shock occurs).

[Probable cause of trouble]
- Open-circuit or short-circuit of harness between electronic control unit and controller area network resistor
- Malfunction of each connector
- Malfunction of controller area network resistor
- Malfunction of electronic control unit

[Recoverability]
- Recovered if signal becomes normal with starter switch in ON position.

[Electronic Control Unit Connection Diagram]

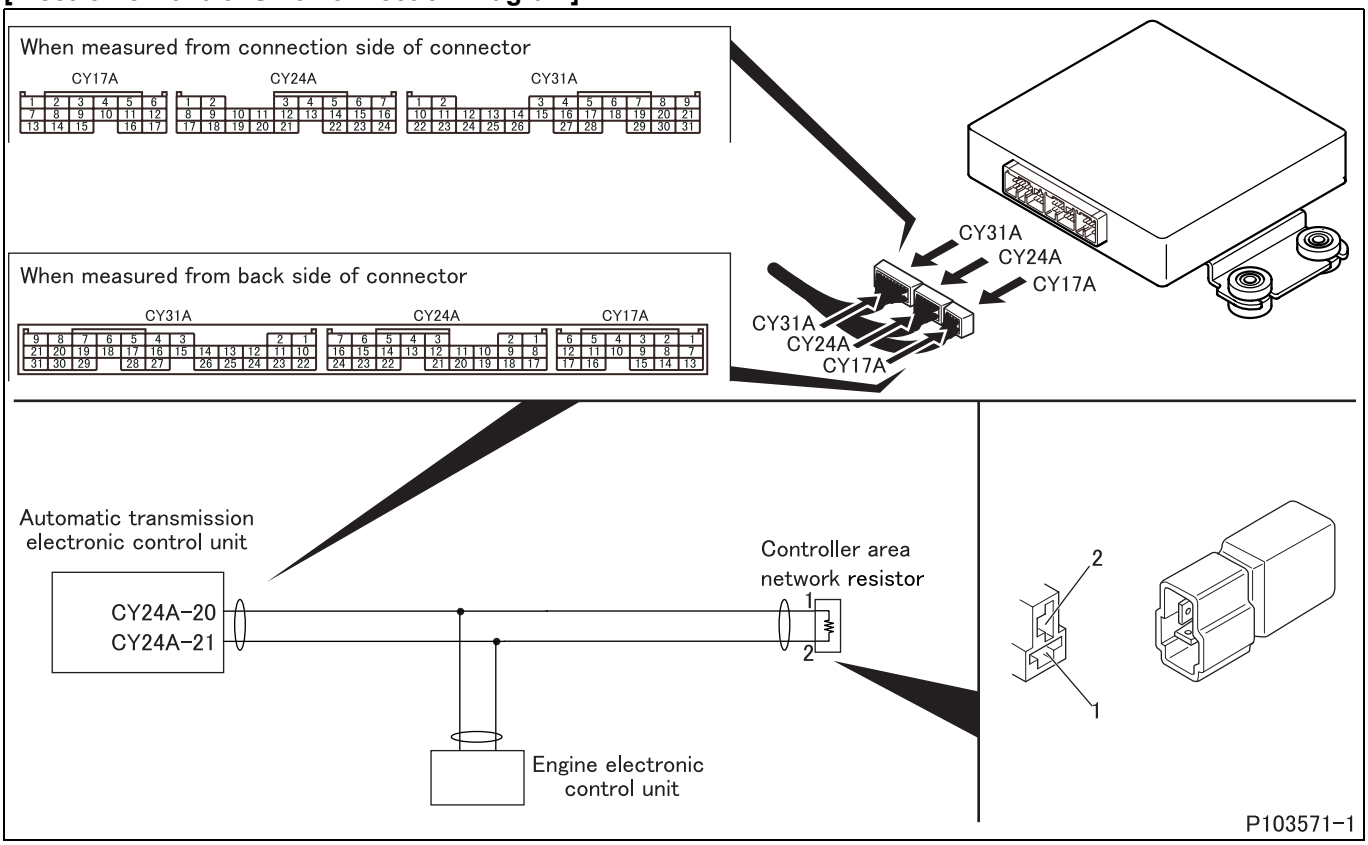

[Parts Identification and Location]

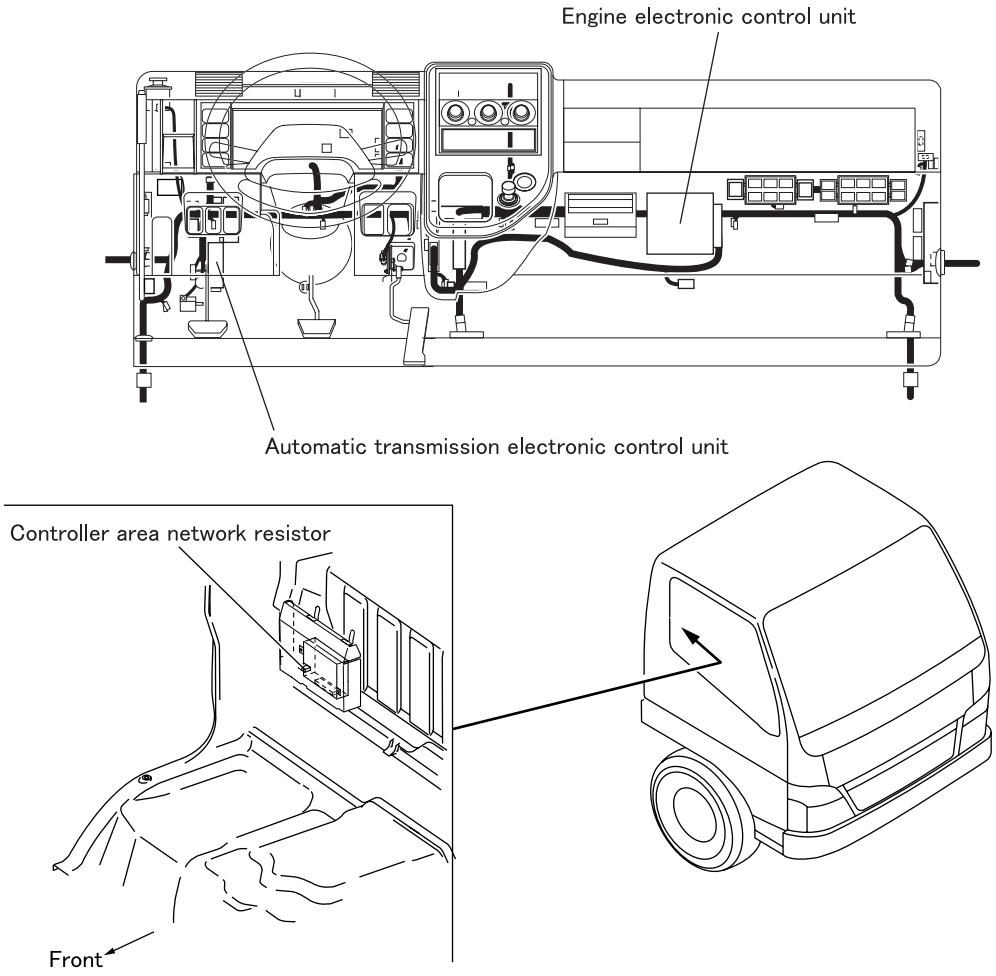

P103571-2

[Fault diagnosis]

- Perform checks in the sequence of the following steps.

Step 1	Inspection items		Inspection by electronic control unit connector
	Maintenance item		Measure value of resistance between connector (CY24A) terminal No. 20 and 21.
	Inspection condition		• Disconnect the engine electronic control unit and automatic transmission electronic control unit connectors, and measure from connection side of harness connector. • Starter switch: OFF
	Requirements		120 ± 6 Ω
	Inspection result (Is the judging standard satisfied?)	YES	Go to transient fault (See Gr00.).
		NO	Go to step 2.

Step 2	Inspection items		Inspection of electronic control unit connector
	Maintenance item		Inspection of connector
	Inspection condition		–
	Requirements		• Connector is properly connected. • No trace of water entry is found. • No corrosion is found in terminal. • Connection to terminal is appropriate.
	Inspection result (Is the judging standard satisfied?)	YES	Go to step 3.
		NO	Modify connector.

Step 3	Inspection items		Inspection of controller area network resistor connector
	Maintenance item		Inspection of connector
	Inspection condition		–
	Requirements		• Connector is properly connected. • No trace of water entry is found. • No corrosion is found in terminal. • Connection to terminal is appropriate.
	Inspection result (Is the judging standard satisfied?)	YES	Go to step 4.
		NO	Modify connector.

Step 4	Inspection items		Inspection of controller area network resistor unit
	Maintenance item		Measure value of resistance between connector terminals No. 1 and 2.
	Inspection condition		–
	Requirements		120 ± 6 Ω
	Inspection result (Is the judging standard satisfied?)	YES	Go to step 5.
		NO	Replacement of controller area network resistor

<Step 4 inspection diagram>

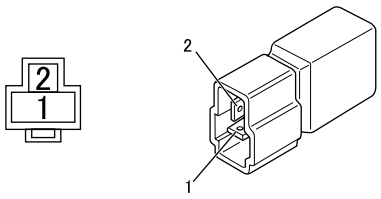

P63068

Step 5	Inspection items		Inspection of harness between electronic control unit and controller area network resistor (HIGH)
	Maintenance item		Check circuit between controller area network resistor connector terminal No. 1 and electronic control unit connector (CY24A) terminal No. 20.
	Inspection condition		Disconnect each device from harness and measure from connection side of harness connector.
	Requirements		There is continuity.
	Inspection result (Is the judging standard satisfied?)	YES	Go to step 6.
		NO	Modify harness.

Step 6	Inspection items		Inspection of harness between electronic control unit and controller area network resistor (LOW)
	Maintenance item		Check circuit between controller area network resistor connector terminal No. 2 and electronic control unit connector (CY24A) terminal No. 21.
	Inspection condition		Disconnect each device from harness and measure from connection side of harness connector.
	Requirements		There is continuity.
	Inspection result (Is the judging standard satisfied?)	YES	Go to step 7.
		NO	Modify harness.

Step 7	Inspection items		Inspection by Multi-Use Tester diagnosis code
	Maintenance item		Check for occurrence of the diagnosis code No. P0863 “CAN Communication”.
	Inspection condition		Starter switch: ON
	Requirements		No codes occur.
	Inspection result (Is the judging standard satisfied?)	YES	Go to transient fault (See Gr00.).
		NO	Perform troubleshooting for the controller area network communication system in the engine electronic control. If the fault is not still removed, replace the automatic transmission electronic control unit.

[Fault code]
Diagnosis code: P0872/Flash code: 45
[Monitor ID]
54
[Fault (outline)]
Failure of oil pressure switch 3
[Diagnosis check]
- Oil pressure switch 3 is monitored for fault when the shift solenoid 1 is energized (high pressure).

[Code generation condition]
- Oil pressure switch 3 remains OFF (low pressure) for 0.1 second.

[Diagnosis check timing]
- Fault diagnosis is performed each time when the control is activated.

[Diagnostic requirement]
- Shift solenoid 1 is ON

[Control effected by electronic control unit during fault]
- Lockup control is turned OFF
- Control is effected on fixed speed gear output (3rd).

[Probable cause of trouble]
- Open-circuit or short-circuit of harness between electronic control unit and oil pressure switch 3 or shift solenoid 1
- Malfunction of each connector
- Malfunction of oil pressure switch 3 or shift solenoid 1
- Malfunction of electronic control unit

[Recoverability]
- Recovered if signal becomes normal when starter switch is turned OFF to ON (power supply resumed to electronic control unit).

[Electronic Control Unit Connection Diagram]

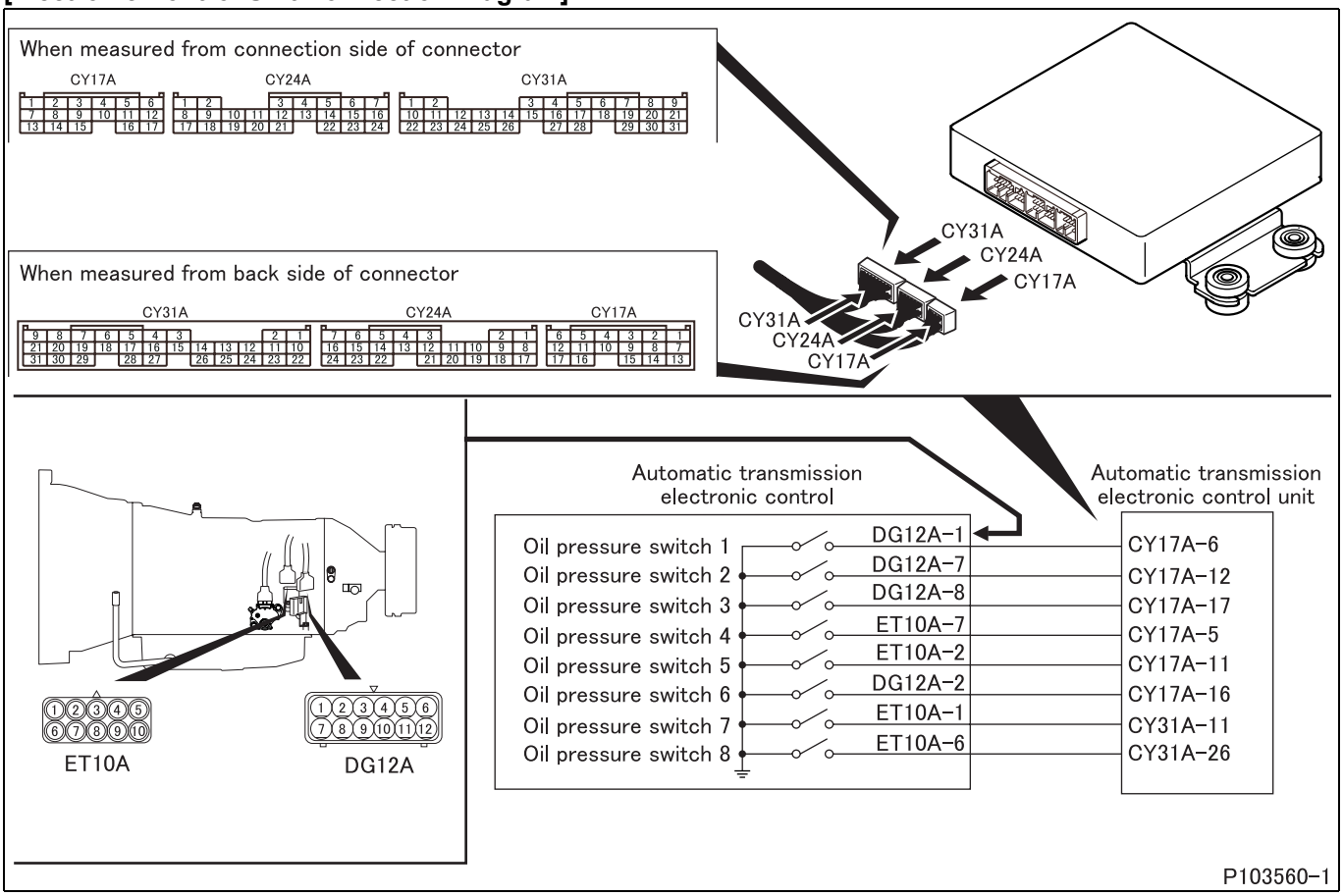

P103560-1

[Parts Identification and Location]

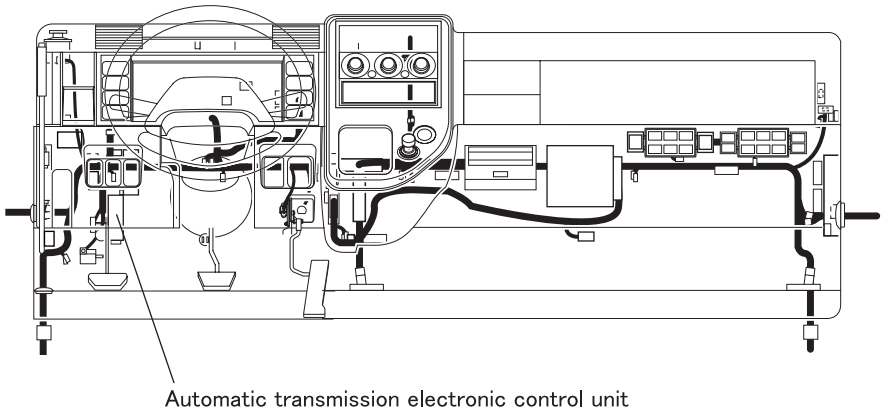

P103560-2

[Fault diagnosis]

- Perform checks in the sequence of the following steps.

Step 1	Inspection items		Inspection by control data
	Maintenance item		**<Multi-Use Tester not used>** Measure value of voltage between connector (CY17A) terminal No. 17 (+) and connector (CY24A) terminal No. 8 (–). **<Multi-Use Tester used>** Measure item No. 63 “Oil Press SW 3” of Service Data.
	Inspection condition		Engine in operation **<Multi-Use Tester not used>** Measure from back side of harness connector with electronic control unit connected to harness.
	Requirements		**<Multi-Use Tester not used>** • In 3rd, 4th gears: 0 V • In 1st, 2nd, 5th, 6th gears: 12 V **<Multi-Use Tester used>** • In 3rd, 4th gears: ON • In 1st, 2nd, 5th, 6th gears: OFF
	Inspection result (Is the judging standard satisfied?)	YES	Go to transient fault (See Gr00.).
		NO	Go to step 2.

Step 2	Inspection items		Inspection by electronic control unit connector (signal)
	Maintenance item		Measure continuity between connector (CY17A) terminal No. 17 and chassis ground.
	Inspection condition		• Disconnect electronic control unit and harness, and measure from connection side of harness connector. • Starter switch: OFF
	Requirements		There is no continuity.
	Inspection result (Is the judging standard satisfied?)	YES	Go to step 3.
		NO	Go to step 4.

Step 3	Inspection items		Inspection of electronic control unit connector
	Maintenance item		Inspection of connector
	Inspection condition		–
	Requirements		• Connector is properly connected. • No trace of water entry is found. • No corrosion is found in terminal. • Connection to terminal is appropriate.
	Inspection result (Is the judging standard satisfied?)	YES	Go to step 7.
		NO	Modify connector.

Step 4	Inspection items		Inspection of switch connector
	Maintenance item		Inspection of connector
	Inspection condition		–
	Requirements		• Connector is properly connected. • No trace of water entry is found. • No corrosion is found in terminal. • Connection to terminal is appropriate.
	Inspection result (Is the judging standard satisfied?)	YES	Go to step 5.
		NO	Modify connector.

Step 5	Inspection items		Inspection of switch unit
	Maintenance item		Check continuity between connector (DG12A) terminal No. 8 and automatic transmission case.
	Inspection condition		• Disconnect connector, and measure switch side terminal. • Starter switch: OFF
	Requirements		There is no continuity.
	Inspection result (Is the judging standard satisfied?)	YES	Go to step 6.
		NO	Replacement of automatic transmission

<Step 5 inspection diagram>

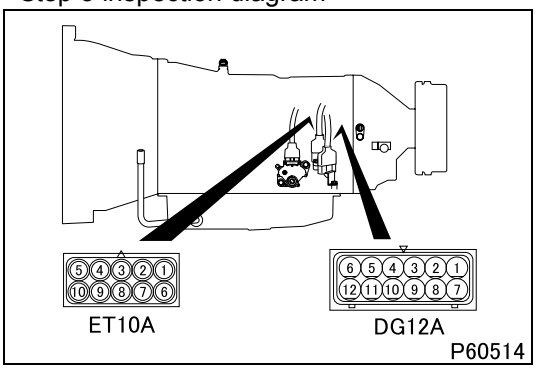

Step 6	Inspection items		Inspection of harness between switch and electronic control unit (signal)
	Maintenance item		Check circuit between connector (DG12A) terminal No. 8 and electronic control unit connector (CY17A) terminal No. 17.
	Inspection condition		Disconnect each device from harness and measure from connection side of harness connector.
	Requirements		There is continuity.
	Inspection result (Is the judging standard satisfied?)	YES	Go to step 7.
		NO	Modify harness.

Step 7	Inspection items		Inspection by control data
	Maintenance item		**<Multi-Use Tester not used>** Measure value of voltage between connector (CY17A) terminal No. 17 (+) and connector (CY24A) terminal No. 8 (–). **<Multi-Use Tester used>** Measure item No. 63 “Oil Press SW 3” of Service Data.
	Inspection condition		Engine in operation **<Multi-Use Tester not used>** Measure from back side of harness connector with electronic control unit connected to harness.
	Requirements		**<Multi-Use Tester not used>** • In 3rd, 4th gears: 0 V • In 1st, 2nd, 5th, 6th gears: 12 V **<Multi-Use Tester used>** • In 3rd, 4th gears: ON • In 1st, 2nd, 5th, 6th gears: OFF
	Inspection result (Is the judging standard satisfied?)	YES	Go to transient fault (See Gr00.).
		NO	• Check if a diagnosis code related to the shift solenoid 1 occurs. If it does, perform troubleshooting of the code. • Replacement of electronic control unit

[Fault code]
Diagnosis code: P0873/Flash code: 45
[Monitor ID]
53
[Fault (outline)]
Failure of oil pressure switch 3
[Diagnosis check]
- Oil pressure switch 3 is monitored for fault when the shift solenoid 1 is deenergized (low pressure).

[Code generation condition]
- Oil pressure switch 3 remains ON (high pressure) for 0.1 second.

[Diagnosis check timing]
- Fault diagnosis is performed each time when the control is activated.

[Diagnostic requirement]
- Shift solenoid 1 is OFF

[Control effected by electronic control unit during fault]
- Lockup control is turned OFF
- Control is effected on fixed speed gear output (3rd).

[Probable cause of trouble]
- Open-circuit or short-circuit of harness between electronic control unit and oil pressure switch 3 or shift solenoid 1
- Malfunction of each connector
- Malfunction of oil pressure switch 3 or shift solenoid 1
- Malfunction of electronic control unit

[Recoverability]
- Recovered if signal becomes normal when starter switch is turned OFF to ON (power supply resumed to electronic control unit).

[Electronic Control Unit Connection Diagram]

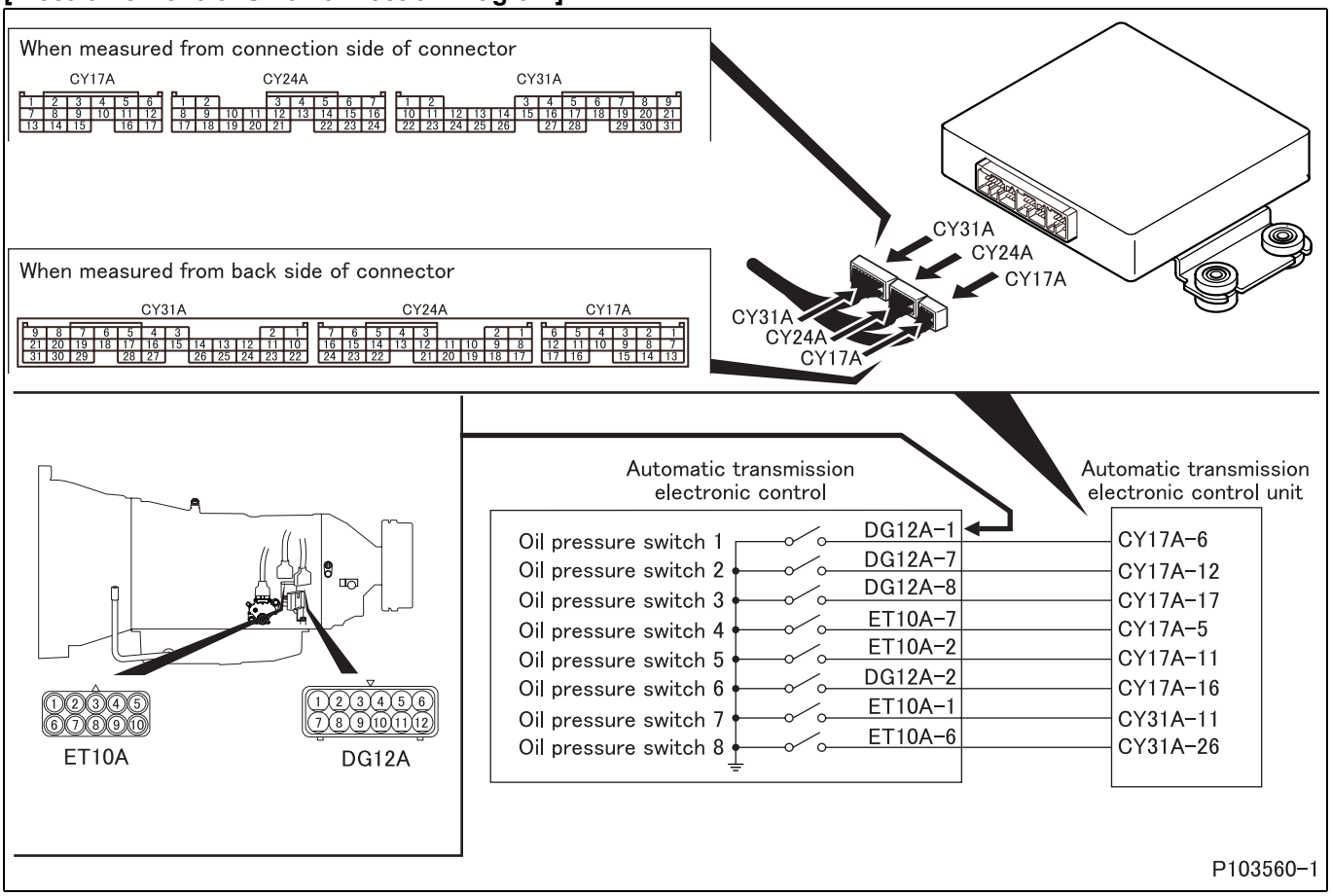

[Parts Identification and Location]

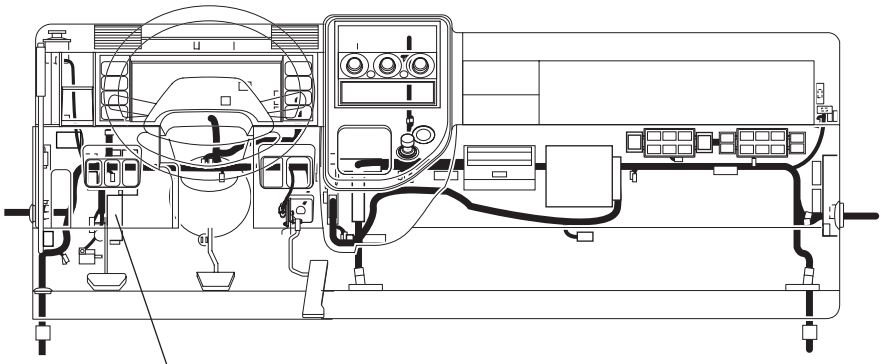

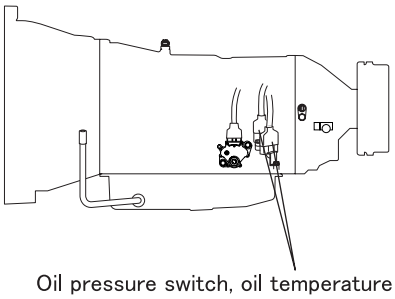

P103560-2

[Fault diagnosis]

- Perform checks in the sequence of the following steps.

Step 1	Inspection items		Inspection by control data
	Maintenance item		**<Multi-Use Tester not used>** Measure value of voltage between connector (CY17A) terminal No. 17 (+) and connector (CY24A) terminal No. 8 (–). **<Multi-Use Tester used>** Measure item No. 63 “Oil Press SW 3” of Service Data.
	Inspection condition		Engine in operation **<Multi-Use Tester not used>** Measure from back side of harness connector with electronic control unit connected to harness.
	Requirements		**<Multi-Use Tester not used>** • In 3rd, 4th gears: 0 V • In 1st, 2nd, 5th, 6th gears: 12 V **<Multi-Use Tester used>** • In 3rd, 4th gears: ON • In 1st, 2nd, 5th, 6th gears: OFF
	Inspection result (Is the judging standard satisfied?)	YES	Go to transient fault (See Gr00.).
		NO	Go to step 2.

Step 2	Inspection items		Inspection by electronic control unit connector (signal)
	Maintenance item		Measure continuity between connector (CY17A) terminal No. 17 and chassis ground.
	Inspection condition		• Disconnect electronic control unit and harness, and measure from connection side of harness connector. • Starter switch: OFF
	Requirements		There is no continuity.
	Inspection result (Is the judging standard satisfied?)	YES	Go to step 3.
		NO	Go to step 4.

Step 3	Inspection items		Inspection of electronic control unit connector
	Maintenance item		Inspection of connector
	Inspection condition		–
	Requirements		• Connector is properly connected. • No trace of water entry is found. • No corrosion is found in terminal. • Connection to terminal is appropriate.
	Inspection result (Is the judging standard satisfied?)	YES	Go to step 7.
		NO	Modify connector.

Step 4	Inspection items		Inspection of switch connector
	Maintenance item		Inspection of connector
	Inspection condition		–
	Requirements		• Connector is properly connected. • No trace of water entry is found. • No corrosion is found in terminal. • Connection to terminal is appropriate.
	Inspection result (Is the judging standard satisfied?)	YES	Go to step 5.
		NO	Modify connector.

Step 5	Inspection items		Inspection of switch unit
	Maintenance item		Check continuity between connector (DG12A) terminal No. 8 and automatic transmission case.
	Inspection condition		• Disconnect connector, and measure switch side terminal. • Starter switch: OFF
	Requirements		There is no continuity.
	Inspection result (Is the judging standard satisfied?)	YES	Go to step 6.
		NO	Replacement of automatic transmission

<Step 5 inspection diagram>

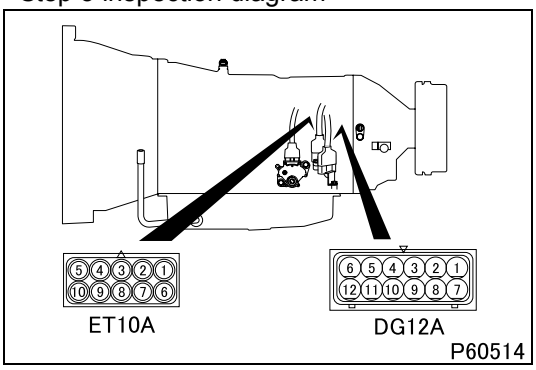

Step 6	Inspection items		Inspection of harness between switch and electronic control unit (signal)
	Maintenance item		Check circuit between connector (DG12A) terminal No. 8 and electronic control unit connector (CY17A) terminal No. 17.
	Inspection condition		Disconnect each device from harness and measure from connection side of harness connector.
	Requirements		There is continuity.
	Inspection result (Is the judging standard satisfied?)	YES	Go to step 7.
		NO	Modify harness.

Step 7	Inspection items		Inspection by control data
	Maintenance item		**<Multi-Use Tester not used>** Measure value of voltage between connector (CY17A) terminal No. 17 (+) and connector (CY24A) terminal No. 8 (–). **<Multi-Use Tester used>** Measure item No. 63 “Oil Press SW 3” of Service Data.
	Inspection condition		Engine in operation **<Multi-Use Tester not used>** Measure from back side of harness connector with electronic control unit connected to harness.
	Requirements		**<Multi-Use Tester not used>** • In 3rd, 4th gears: 0 V • In 1st, 2nd, 5th, 6th gears: 12 V **<Multi-Use Tester used>** • In 3rd, 4th gears: ON • In 1st, 2nd, 5th, 6th gears: OFF
	Inspection result (Is the judging standard satisfied?)	YES	Go to transient fault (See Gr00.).
		NO	• Check if a diagnosis code related to the shift solenoid 1 occurs. If it does, perform troubleshooting of the code. • Replacement of electronic control unit

[Fault code]
Diagnosis code: P0877/Flash code: 46
[Monitor ID]
58
[Fault (outline)]
Failure of oil pressure switch 4
[Diagnosis check]
- Oil pressure switch 4 is monitored for fault when the shift solenoid 2 is energized (high pressure).

[Code generation condition]
- Oil pressure switch 4 remains OFF (low pressure) for 0.1 second.

[Diagnosis check timing]
- Fault diagnosis is performed each time when the control is activated.

[Diagnostic requirement]
- Shift solenoid 2 is ON

[Control effected by electronic control unit during fault]
- Lockup control is turned OFF
- Control is effected on fixed speed gear output (3rd).

[Probable cause of trouble]
- Open-circuit or short-circuit of harness between electronic control unit and oil pressure switch 4 or shift solenoid 2
- Malfunction of each connector
- Malfunction of oil pressure switch 4 or shift solenoid 2
- Malfunction of electronic control unit

[Recoverability]
- Recovered if signal becomes normal when starter switch is turned OFF to ON (power supply resumed to electronic control unit).

[Electronic Control Unit Connection Diagram]

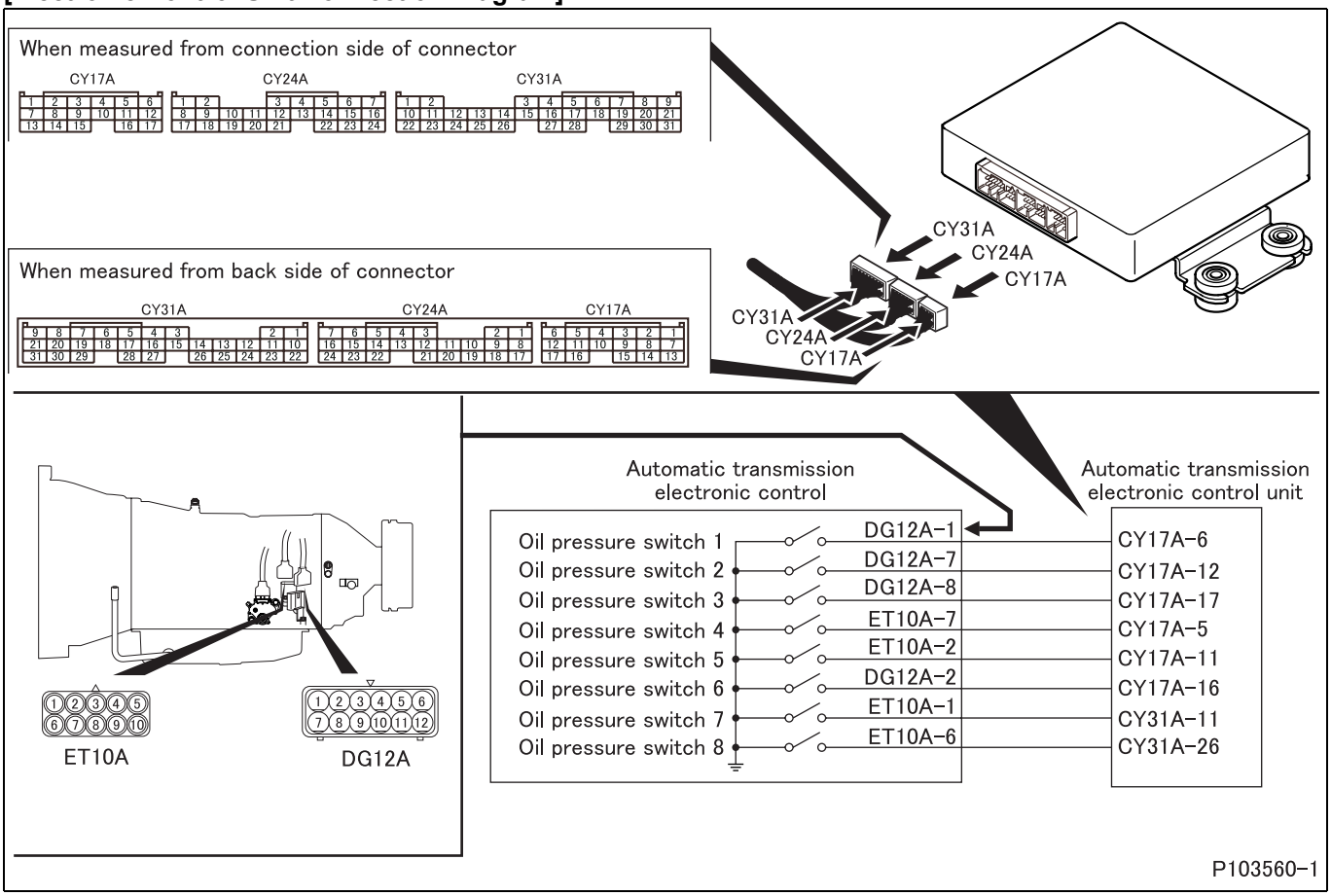

[Parts Identification and Location]

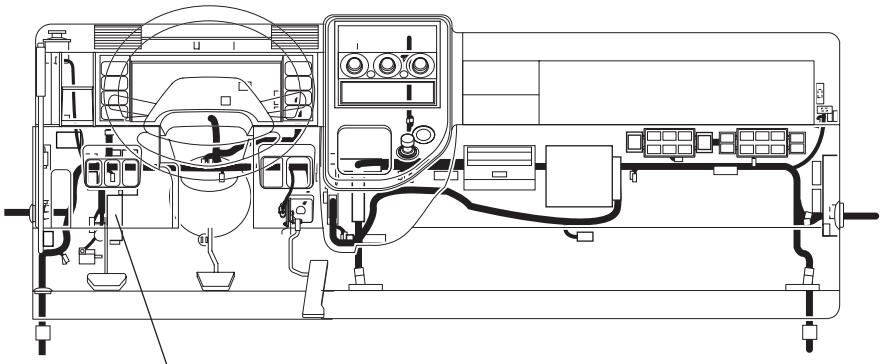

Automatic transmission electronic control unit

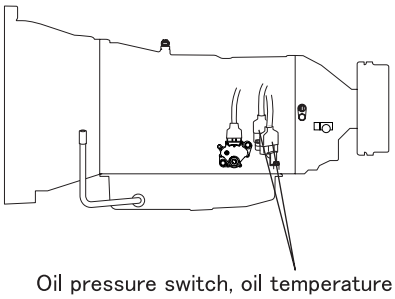

Oil pressure switch, oil temperature sensor (outside), shift solenoid and linear solenoid [ET10A, DG12A]

P103560-2

[Fault diagnosis]

- Perform checks in the sequence of the following steps.

Step 1	Inspection items		Inspection by control data
	Maintenance item		**<Multi-Use Tester not used>** Measure value of voltage between connector (CY17A) terminal No. 5 (+) and connector (CY24A) terminal No. 8 (–). **<Multi-Use Tester used>** Measure item No. 64 “Oil Press SW 4” of Service Data.
	Inspection condition		Engine in operation **<Multi-Use Tester not used>** Measure from back side of harness connector with electronic control unit connected to harness.
	Requirements		**<Multi-Use Tester not used>** • In 4th, 5th, 6th gears: 0 V • In 1st, 2nd, 3rd gears: 12 V **<Multi-Use Tester used>** • In 4th, 5th, 6th gears: ON • In 1st, 2nd, 3rd gears: OFF
	Inspection result (Is the judging standard satisfied?)	YES	Go to transient fault (See Gr00.).
		NO	Go to step 2.

Step 2	Inspection items		Inspection by electronic control unit connector (signal)
	Maintenance item		Measure continuity between connector (CY17A) terminal No. 5 and chassis ground.
	Inspection condition		• Disconnect electronic control unit and harness, and measure from connection side of harness connector. • Starter switch: OFF
	Requirements		There is no continuity.
	Inspection result (Is the judging standard satisfied?)	YES	Go to step 3.
		NO	Go to step 4.

Step 3	Inspection items		Inspection of electronic control unit connector
	Maintenance item		Inspection of connector
	Inspection condition		–
	Requirements		• Connector is properly connected. • No trace of water entry is found. • No corrosion is found in terminal. • Connection to terminal is appropriate.
	Inspection result (Is the judging standard satisfied?)	YES	Go to step 7.
		NO	Modify connector.

Step 4	Inspection items		Inspection of switch connector
	Maintenance item		Inspection of connector
	Inspection condition		–
	Requirements		• Connector is properly connected. • No trace of water entry is found. • No corrosion is found in terminal. • Connection to terminal is appropriate.
	Inspection result (Is the judging standard satisfied?)	YES	Go to step 5.
		NO	Modify connector.

Step 5	Inspection items		Inspection of switch unit
	Maintenance item		Check continuity between connector (ET10A) terminal No. 7 and automatic transmission case.
	Inspection condition		• Disconnect connector, and measure switch side terminal. • Starter switch: OFF
	Requirements		There is no continuity.
	Inspection result (Is the judging standard satisfied?)	YES	Go to step 6.
		NO	Replacement of automatic transmission

<Step 5 inspection diagram>

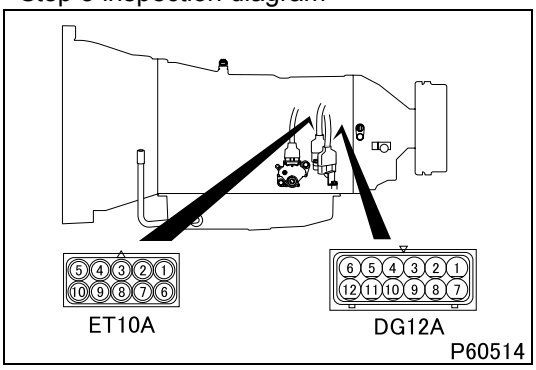

Step 6	Inspection items		Inspection of harness between switch and electronic control unit (signal)
	Maintenance item		Check circuit between connector (ET10A) terminal No. 7 and electronic control unit connector (CY17A) terminal No. 5.
	Inspection condition		Disconnect each device from harness and measure from connection side of harness connector.
	Requirements		There is continuity.
	Inspection result (Is the judging standard satisfied?)	YES	Go to step 7.
		NO	Modify harness.

Step 7	Inspection items		Inspection by control data
	Maintenance item		**<Multi-Use Tester not used>** Measure value of voltage between connector (CY17A) terminal No. 5 (+) and connector (CY24A) terminal No. 8 (–). **<Multi-Use Tester used>** Measure item No. 64 “Oil Press SW 4” of Service Data.
	Inspection condition		Engine in operation **<Multi-Use Tester not used>** Measure from back side of harness connector with electronic control unit connected to harness.
	Requirements		**<Multi-Use Tester not used>** • In 4th, 5th, 6th gears: 0 V • In 1st, 2nd, 3rd gears: 12 V **<Multi-Use Tester used>** • In 4th, 5th, 6th gears: ON • In 1st, 2nd, 3rd gears: OFF
	Inspection result (Is the judging standard satisfied?)	YES	Go to transient fault (See Gr00.).
		NO	• Check if a diagnosis code related to the shift solenoid 2 occurs. If it does, perform troubleshooting of the code. • Replacement of electronic control unit

[Fault code]
Diagnosis code: P0878/Flash code: 46
[Monitor ID]
57
[Fault (outline)]
Failure of oil pressure switch 4
[Diagnosis check]
- Oil pressure switch 4 is monitored for fault when the shift solenoid 2 is deenergized (low pressure).

[Code generation condition]
- Oil pressure switch 4 remains ON (high pressure) for 0.1 second.

[Diagnosis check timing]
- Fault diagnosis is performed each time when the control is activated.

[Diagnostic requirement]
- Shift solenoid 2 is OFF

[Control effected by electronic control unit during fault]
- Lockup control is turned OFF
- Control is effected on fixed speed gear output (5th).

[Probable cause of trouble]
- Open-circuit or short-circuit of harness between electronic control unit and oil pressure switch 4 or shift solenoid 2
- Malfunction of each connector
- Malfunction of oil pressure switch 4 or shift solenoid 2
- Malfunction of electronic control unit

[Recoverability]
- Recovered if signal becomes normal when starter switch is turned OFF to ON (power supply resumed to electronic control unit).

[Electronic Control Unit Connection Diagram]

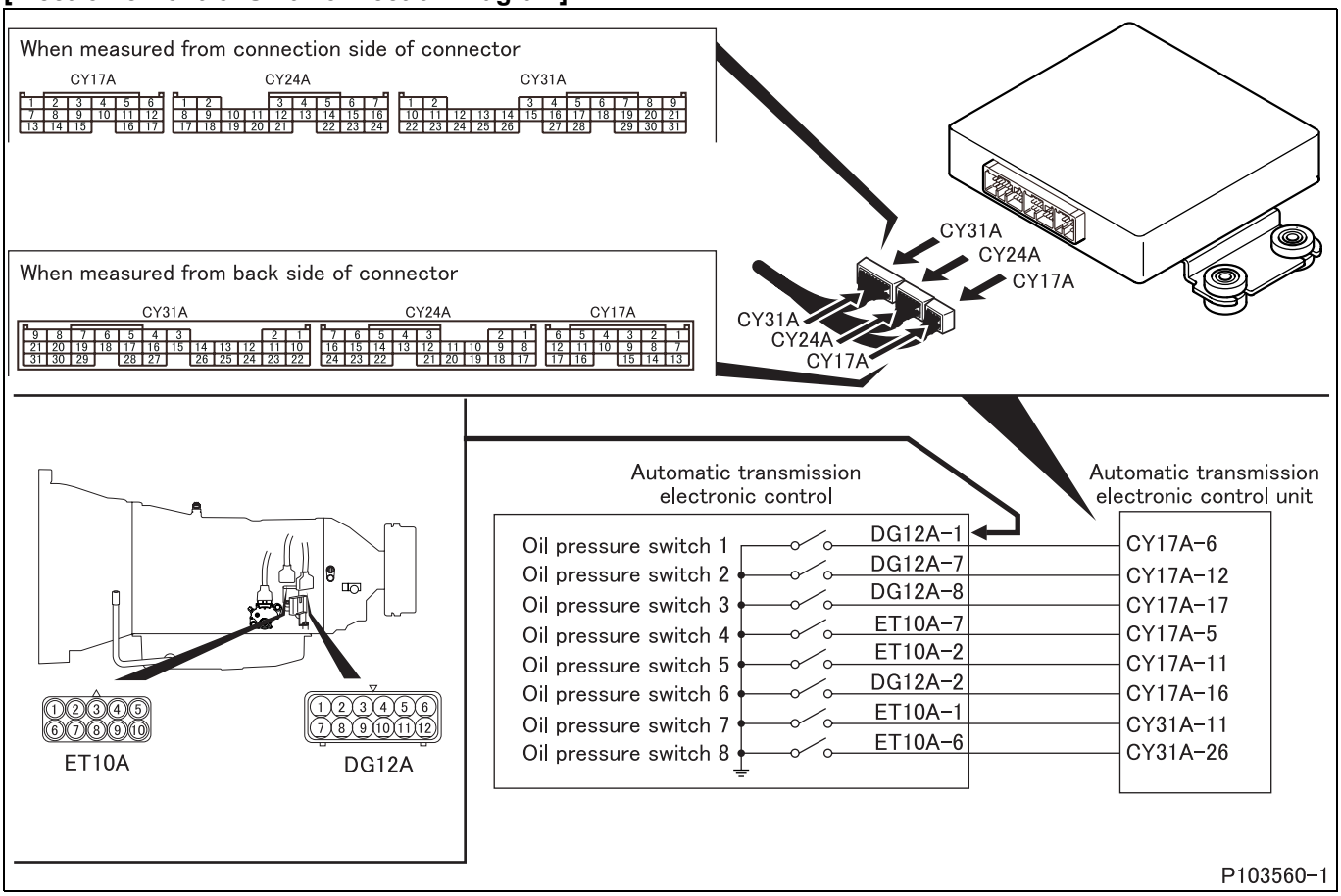

P103560-1

[Parts Identification and Location]

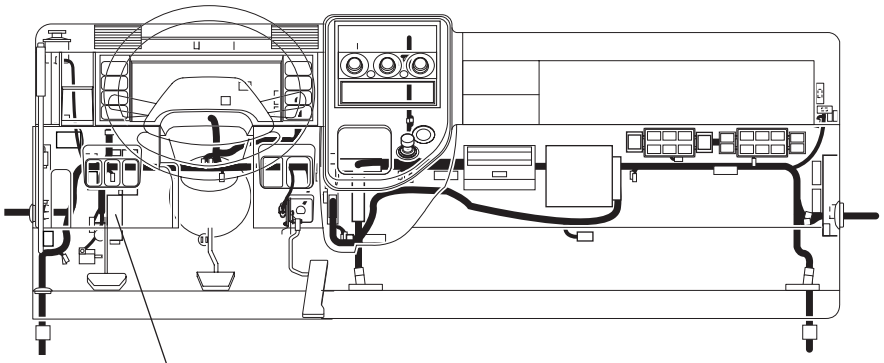

Automatic transmission electronic control unit

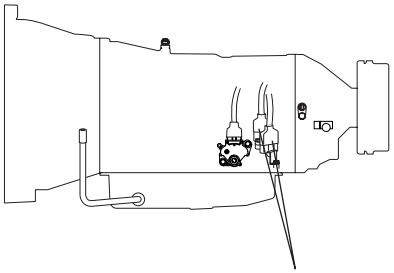

Oil pressure switch, oil temperature sensor (outside), shift solenoid and linear solenoid [ET10A, DG12A]

P103560-2

[Fault diagnosis]

- Perform checks in the sequence of the following steps.

Step 1	Inspection items		Inspection by control data
	Maintenance item		**<Multi-Use Tester not used>** Measure value of voltage between connector (CY17A) terminal No. 5 (+) and connector (CY24A) terminal No. 8 (–). **<Multi-Use Tester used>** Measure item No. 64 “Oil Press SW 4” of Service Data.
	Inspection condition		Engine in operation **<Multi-Use Tester not used>** Measure from back side of harness connector with electronic control unit connected to harness.
	Requirements		**<Multi-Use Tester not used>** • In 4th, 5th, 6th gears: 0 V • In 1st, 2nd, 3rd gears: 12 V **<Multi-Use Tester used>** • In 4th, 5th, 6th gears: ON • In 1st, 2nd, 3rd gears: OFF
	Inspection result (Is the judging standard satisfied?)	YES	Go to transient fault (See Gr00.).
		NO	Go to step 2.

Step 2	Inspection items		Inspection by electronic control unit connector (signal)
	Maintenance item		Measure continuity between connector (CY17A) terminal No. 5 and chassis ground.
	Inspection condition		• Disconnect electronic control unit and harness, and measure from connection side of harness connector. • Starter switch: OFF
	Requirements		There is no continuity.
	Inspection result (Is the judging standard satisfied?)	YES	Go to step 3.
		NO	Go to step 4.

Step 3	Inspection items		Inspection of electronic control unit connector
	Maintenance item		Inspection of connector
	Inspection condition		–
	Requirements		• Connector is properly connected. • No trace of water entry is found. • No corrosion is found in terminal. • Connection to terminal is appropriate.
	Inspection result (Is the judging standard satisfied?)	YES	Go to step 7.
		NO	Modify connector.

Step 4	Inspection items		Inspection of switch connector
	Maintenance item		Inspection of connector
	Inspection condition		–
	Requirements		• Connector is properly connected. • No trace of water entry is found. • No corrosion is found in terminal. • Connection to terminal is appropriate.
	Inspection result (Is the judging standard satisfied?)	YES	Go to step 5.
		NO	Modify connector.

Step 5	Inspection items		Inspection of switch unit
	Maintenance item		Check continuity between connector (ET10A) terminal No. 7 and automatic transmission case.
	Inspection condition		• Disconnect connector, and measure switch side terminal. • Starter switch: OFF
	Requirements		There is no continuity.
	Inspection result (Is the judging standard satisfied?)	YES	Go to step 6.
		NO	Replacement of automatic transmission

<Step 5 inspection diagram>

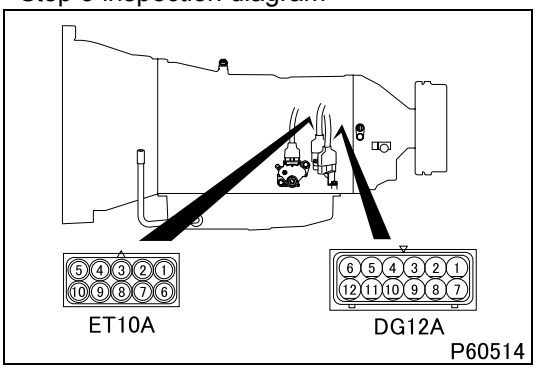

Step 6	Inspection items		Inspection of harness between switch and electronic control unit (signal)
	Maintenance item		Check circuit between connector (ET10A) terminal No. 7 and electronic control unit connector (CY17A) terminal No. 5.
	Inspection condition		Disconnect each device from harness and measure from connection side of harness connector.
	Requirements		There is continuity.
	Inspection result (Is the judging standard satisfied?)	YES	Go to step 7.
		NO	Modify harness.

Step 7	Inspection items		Inspection by control data
	Maintenance item		**<Multi-Use Tester not used>** Measure value of voltage between connector (CY17A) terminal No. 5 (+) and connector (CY24A) terminal No. 8 (–). **<Multi-Use Tester used>** Measure item No. 64 “Oil Press SW 4” of Service Data.
	Inspection condition		Engine in operation **<Multi-Use Tester not used>** Measure from back side of harness connector with electronic control unit connected to harness.
	Requirements		**<Multi-Use Tester not used>** • In 4th, 5th, 6th gears: 0 V • In 1st, 2nd, 3rd gears: 12 V **<Multi-Use Tester used>** • In 4th, 5th, 6th gears: ON • In 1st, 2nd, 3rd gears: OFF
	Inspection result (Is the judging standard satisfied?)	YES	Go to transient fault (See Gr00.).
		NO	• Check if a diagnosis code related to the shift solenoid 2 occurs. If it does, perform troubleshooting of the code. • Replacement of electronic control unit

[Fault code]
Diagnosis code: P0973/Flash code: 31
[Monitor ID]
29
[Fault (outline)]
Failure of shift solenoid 1
[Diagnosis check]
- Current in the shift solenoid 1 is monitored for fault.

[Code generation condition]
- Current in the shift solenoid 1 remains at or above the specified value (4A) for 0.1 second (short-circuit in ground side).

[Diagnosis check timing]
- Fault diagnosis is continuously performed.

[Diagnostic requirement]
- Continuous

[Control effected by electronic control unit during fault]
- Lockup control is turned OFF
- Control is effected on fixed speed gear output (3rd).

[Probable cause of trouble]
- Short-circuit of harness between electronic control unit and shift solenoid 1
- Malfunction of each connector
- Malfunction of shift solenoid 1
- Malfunction of electronic control unit

[Recoverability]
- Recovered if signal becomes normal when starter switch is turned OFF to ON (power supply resumed to electronic control unit).

[Electronic Control Unit Connection Diagram]

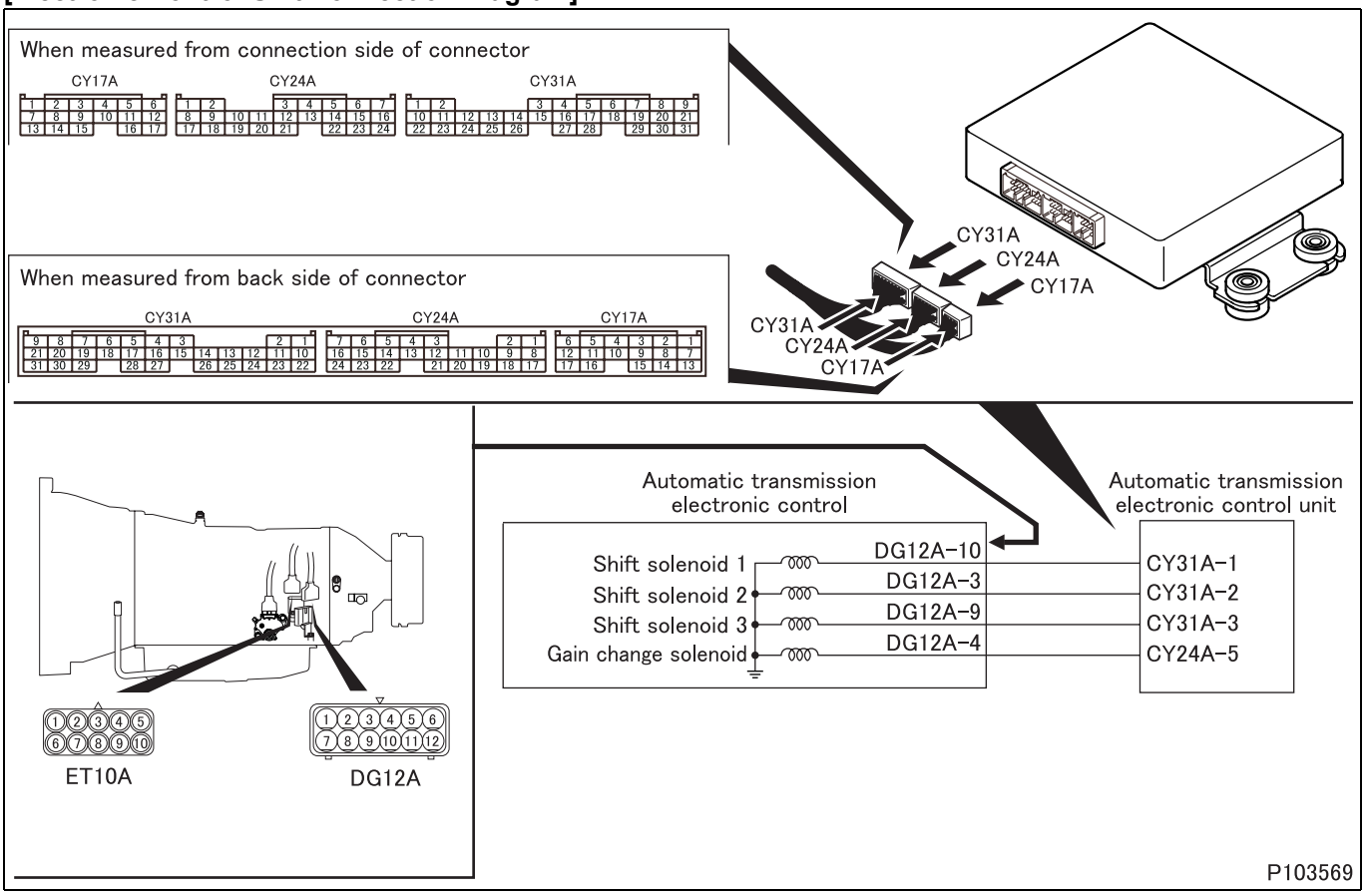

P103569

[Parts Identification and Location]

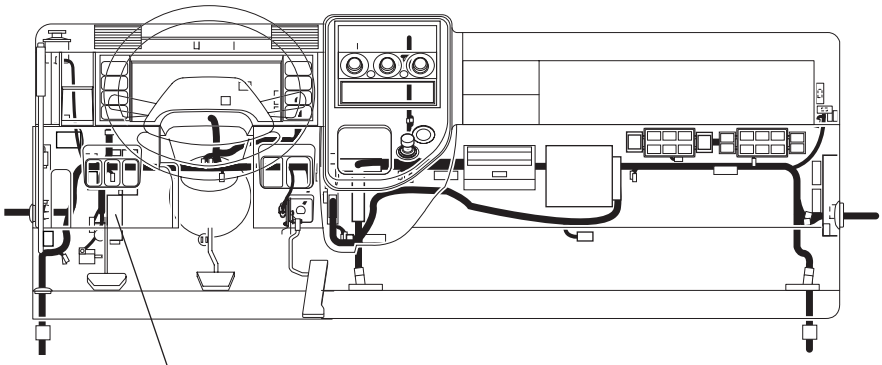

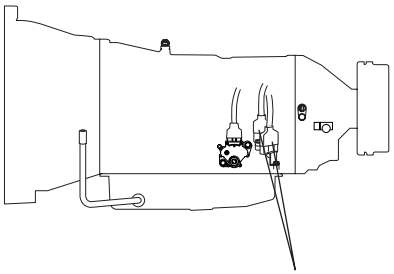

P103560-2

[Fault diagnosis]

- Perform checks in the sequence of the following steps.

Step 1	Inspection items		Inspection by control data
	Maintenance item		**<Multi-Use Tester not used>** Measure value of voltage between connector (CY31A) terminal No. 1 (+) and connector (CY24A) terminal No. 8 (–). **<Multi-Use Tester used>** Measure items No. 31 “Shift Valve 1” and No. 71 “Shift Valve Press 1” of Service Data.
	Inspection condition		Vehicle run **<Multi-Use Tester not used>** Measure from back side of harness connector with electronic control unit connected to harness.
	Requirements		**<Multi-Use Tester not used>** • In 3rd, 4th gears: 12 V • In any gears except above: 0 V **<Multi-Use Tester used>** <No. 31 “Shift Valve 1”> • In 3rd, 4th gears: ON • In any gears except above: OFF <No. 71 “Shift Valve Press 1”> • In 3rd, 4th gears: HIGH • In any gears except above: LOW
	Inspection result (Is the judging standard satisfied?)	YES	Go to transient fault (See Gr00.).
		NO	Go to step 2.

Step 2	Inspection items		Inspection by electronic control unit connector (signal)
	Maintenance item		Measure value of resistance between connector (CY31A) terminal No. 1 and chassis ground.
	Inspection condition		• Disconnect electronic control unit and harness, and measure from connection side of harness connector. • Starter switch: OFF
	Requirements		13 ± 2 Ω
	Inspection result (Is the judging standard satisfied?)	YES	Go to step 3.
		NO	Go to step 4.

Step 3	Inspection items		Inspection of electronic control unit connector
	Maintenance item		Inspection of connector
	Inspection condition		–
	Requirements		• Connector is properly connected. • No trace of water entry is found. • No corrosion is found in terminal. • Connection to terminal is appropriate.
	Inspection result (Is the judging standard satisfied?)	YES	Go to step 7.
		NO	Modify connector.

Step 4	Inspection items		Inspection of solenoid connector
	Maintenance item		Inspection of connector
	Inspection condition		–
	Requirements		• Connector is properly connected. • No trace of water entry is found. • No corrosion is found in terminal. • Connection to terminal is appropriate.
	Inspection result (Is the judging standard satisfied?)	YES	Go to step 5.
		NO	Modify connector.

Step 5	Inspection items		Inspection of solenoid unit
	Maintenance item		Measure value of resistance between connector (DG12A) terminal No. 10 and automatic transmission case.
	Inspection condition		• Disconnect connector, and measure solenoid side terminal. • Starter switch: OFF
	Requirements		13 ± 2 Ω
	Inspection result (Is the judging standard satisfied?)	YES	Go to step 6.
		NO	Replacement of automatic transmission

<Step 5 inspection diagram>

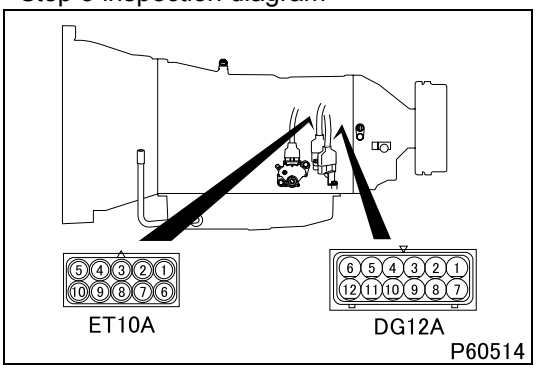

Step 6	Inspection items		Inspection of harness between solenoid and electronic control unit (power supply)
	Maintenance item		Check circuit between connector (DG12A) terminal No. 10 and electronic control unit connector (CY31A) terminal No. 1.
	Inspection condition		Disconnect each device from harness and measure from connection side of harness connector.
	Requirements		There is continuity.
	Inspection result (Is the judging standard satisfied?)	YES	Go to step 7.
		NO	Modify harness.

Step 7	Inspection items		Inspection by control data
	Maintenance item		**<Multi-Use Tester not used>** Measure value of voltage between connector (CY31A) terminal No. 1 (+) and connector (CY24A) terminal No. 8 (–). **<Multi-Use Tester used>** Measure items No. 31 “Shift Valve 1” and No. 71 “Shift Valve Press 1” of Service Data.
	Inspection condition		Vehicle run **<Multi-Use Tester not used>** Measure from back side of harness connector with electronic control unit connected to harness.
	Requirements		**<Multi-Use Tester not used>** • In 3rd, 4th gears: 12 V • In any gears except above: 0 V **<Multi-Use Tester used>** <No. 31 “Shift Valve 1”> • In 3rd, 4th gears: ON • In any gears except above: OFF <No. 71 “Shift Valve Press 1”> • In 3rd, 4th gears: HIGH • In any gears except above: LOW
	Inspection result (Is the judging standard satisfied?)	YES	If the diagnosis code remains after actual run, replace the electronic control unit.
		NO	Replacement of electronic control unit

[Fault code]
Diagnosis code: P0974/Flash code: 31
[Monitor ID]
30
[Fault (outline)]
Failure of shift solenoid 1
[Diagnosis check]
- Resistance in the shift solenoid 1 is monitored for fault.

[Code generation condition]
- Resistance in the shift solenoid 1 remains at or above the specified value (100 kΩ) for 0.1 second (open-circuit or short-circuit in power supply side).

[Diagnosis check timing]
- Fault diagnosis is continuously performed.

[Diagnostic requirement]
- Continuous

[Control effected by electronic control unit during fault]
- Lockup control is turned OFF
- Control is effected on fixed speed gear output (3rd).

[Probable cause of trouble]
- Short-circuit of harness between electronic control unit and shift solenoid 1
- Malfunction of each connector
- Malfunction of shift solenoid 1
- Malfunction of electronic control unit

[Recoverability]
- Recovered if signal becomes normal when starter switch is turned OFF to ON (power supply resumed to electronic control unit).

[Electronic Control Unit Connection Diagram]

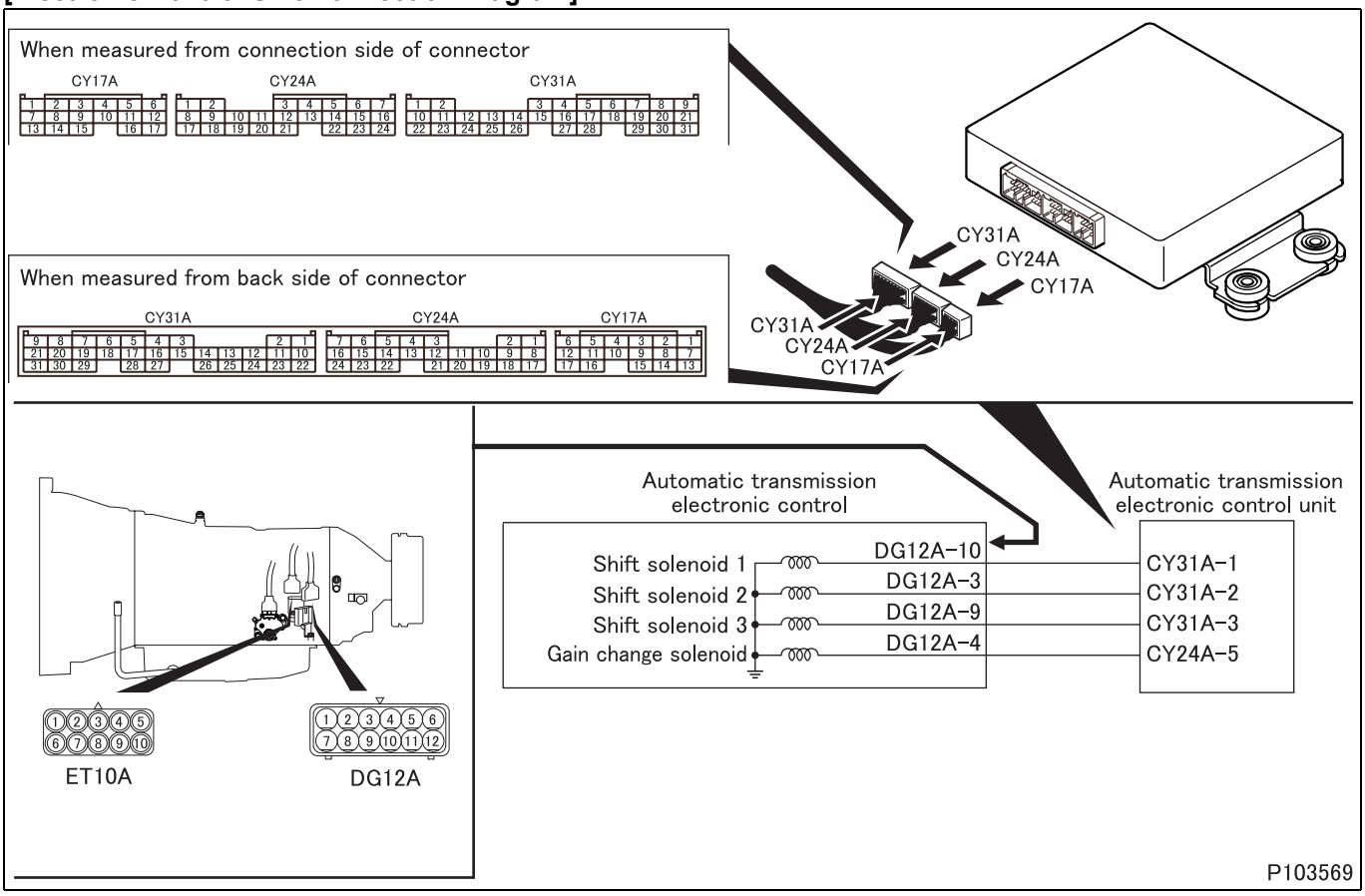

P103569

[Parts Identification and Location]

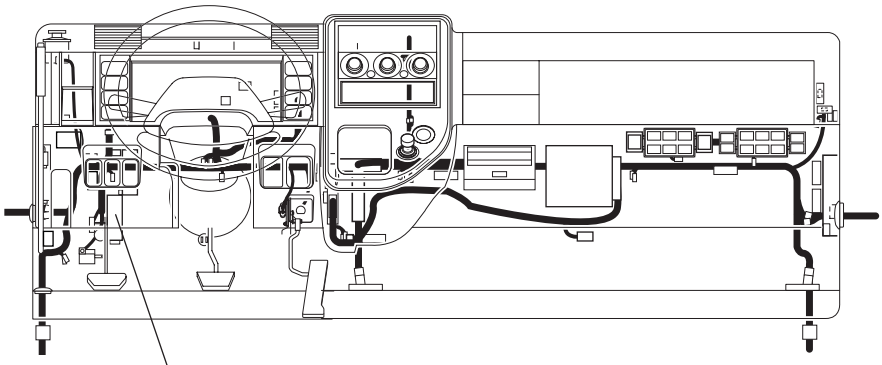

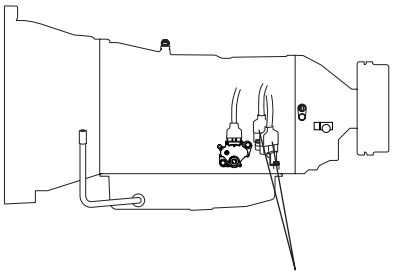

P103560-2

[Fault diagnosis]

- Perform checks in the sequence of the following steps.

Step 1	Inspection items		Inspection by control data
	Maintenance item		**<Multi-Use Tester not used>** Measure value of voltage between connector (CY31A) terminal No. 1 (+) and connector (CY24A) terminal No. 8 (–). **<Multi-Use Tester used>** Measure items No. 31 “Shift Valve 1” and No. 71 “Shift Valve Press 1” of Service Data.
	Inspection condition		Vehicle run **<Multi-Use Tester not used>** Measure from back side of harness connector with electronic control unit connected to harness.
	Requirements		**<Multi-Use Tester not used>** • In 3rd, 4th gears: 12 V • In any gears except above: 0 V **<Multi-Use Tester used>** <No. 31 “Shift Valve 1”> • In 3rd, 4th gears: ON • In any gears except above: OFF <No. 71 “Shift Valve Press 1”> • In 3rd, 4th gears: HIGH • In any gears except above: LOW
	Inspection result (Is the judging standard satisfied?)	YES	Go to transient fault (See Gr00.).
		NO	Go to step 2.

Step 2	Inspection items		Inspection by electronic control unit connector (signal)
	Maintenance item		Measure value of resistance between connector (CY31A) terminal No. 1 and chassis ground.
	Inspection condition		• Disconnect electronic control unit and harness, and measure from connection side of harness connector. • Starter switch: OFF
	Requirements		13 ± 2 Ω
	Inspection result (Is the judging standard satisfied?)	YES	Go to step 3.
		NO	Go to step 4.

Step 3	Inspection items		Inspection of electronic control unit connector
	Maintenance item		Inspection of connector
	Inspection condition		–
	Requirements		• Connector is properly connected. • No trace of water entry is found. • No corrosion is found in terminal. • Connection to terminal is appropriate.
	Inspection result (Is the judging standard satisfied?)	YES	Go to step 7.
		NO	Modify connector.

Step 4	Inspection items		Inspection of solenoid connector
	Maintenance item		Inspection of connector
	Inspection condition		–
	Requirements		• Connector is properly connected. • No trace of water entry is found. • No corrosion is found in terminal. • Connection to terminal is appropriate.
	Inspection result (Is the judging standard satisfied?)	YES	Go to step 5.
		NO	Modify connector.

Step 5	Inspection items		Inspection of solenoid unit
	Maintenance item		Measure value of resistance between connector (DG12A) terminal No. 10 and automatic transmission case.
	Inspection condition		• Disconnect connector, and measure solenoid side terminal. • Starter switch: OFF
	Requirements		13 ± 2 Ω
	Inspection result (Is the judging standard satisfied?)	YES	Go to step 6.
		NO	Replacement of automatic transmission

<Step 5 inspection diagram>

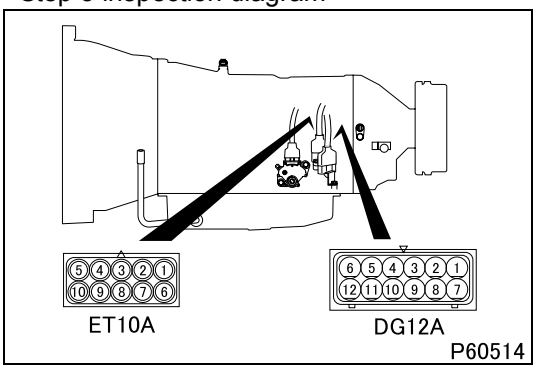

Step 6	Inspection items		Inspection of harness between solenoid and electronic control unit (power supply)
	Maintenance item		Check circuit between connector (DG12A) terminal No. 10 and electronic control unit connector (CY31A) terminal No. 1.
	Inspection condition		Disconnect each device from harness and measure from connection side of harness connector.
	Requirements		There is continuity.
	Inspection result (Is the judging standard satisfied?)	YES	Go to step 7.
		NO	Modify harness.

Step 7	Inspection items		Inspection by control data
	Maintenance item		**<Multi-Use Tester not used>** Measure value of voltage between connector (CY31A) terminal No. 1 (+) and connector (CY24A) terminal No. 8 (–). **<Multi-Use Tester used>** Measure items No. 31 “Shift Valve 1” and No. 71 “Shift Valve Press 1” of Service Data.
	Inspection condition		Vehicle run **<Multi-Use Tester not used>** Measure from back side of harness connector with electronic control unit connected to harness.
	Requirements		**<Multi-Use Tester not used>** • In 3rd, 4th gears: 12 V • In any gears except above: 0 V **<Multi-Use Tester used>** <No. 31 “Shift Valve 1”> • In 3rd, 4th gears: ON • In any gears except above: OFF <No. 71 “Shift Valve Press 1”> • In 3rd, 4th gears: HIGH • In any gears except above: LOW
	Inspection result (Is the judging standard satisfied?)	YES	If the diagnosis code remains after actual run, replace the electronic control unit.
		NO	Replacement of electronic control unit

[Fault code]
Diagnosis code: P0976/Flash code: 32
[Monitor ID]
31
[Fault (outline)]
Failure of shift solenoid 2
[Diagnosis check]
- Current in the shift solenoid 2 is monitored for fault.

[Code generation condition]
- Current in the shift solenoid 2 remains at or above the specified value (4A) for 0.1 second (short-circuit in ground side).

[Diagnosis check timing]
- Fault diagnosis is continuously performed.

[Diagnostic requirement]
- Continuous

[Control effected by electronic control unit during fault]
- Lockup control is turned OFF
- Control is effected on fixed speed gear output (5th).

[Probable cause of trouble]
- Short-circuit of harness between electronic control unit and shift solenoid 2
- Malfunction of each connector
- Malfunction of shift solenoid 2
- Malfunction of electronic control unit

[Recoverability]
- Recovered if signal becomes normal when starter switch is turned OFF to ON (power supply resumed to electronic control unit).

[Electronic Control Unit Connection Diagram]

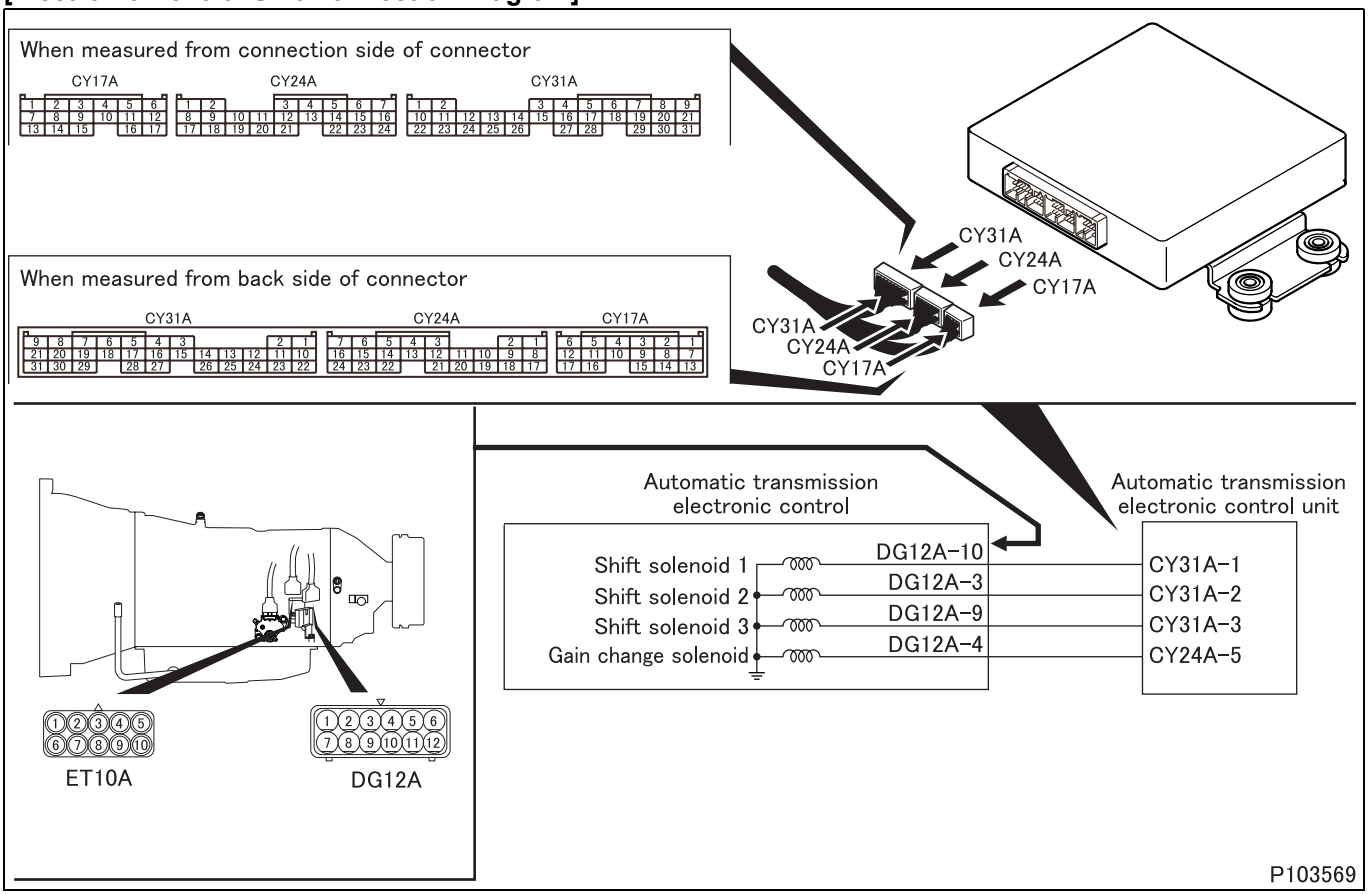

[Parts Identification and Location]

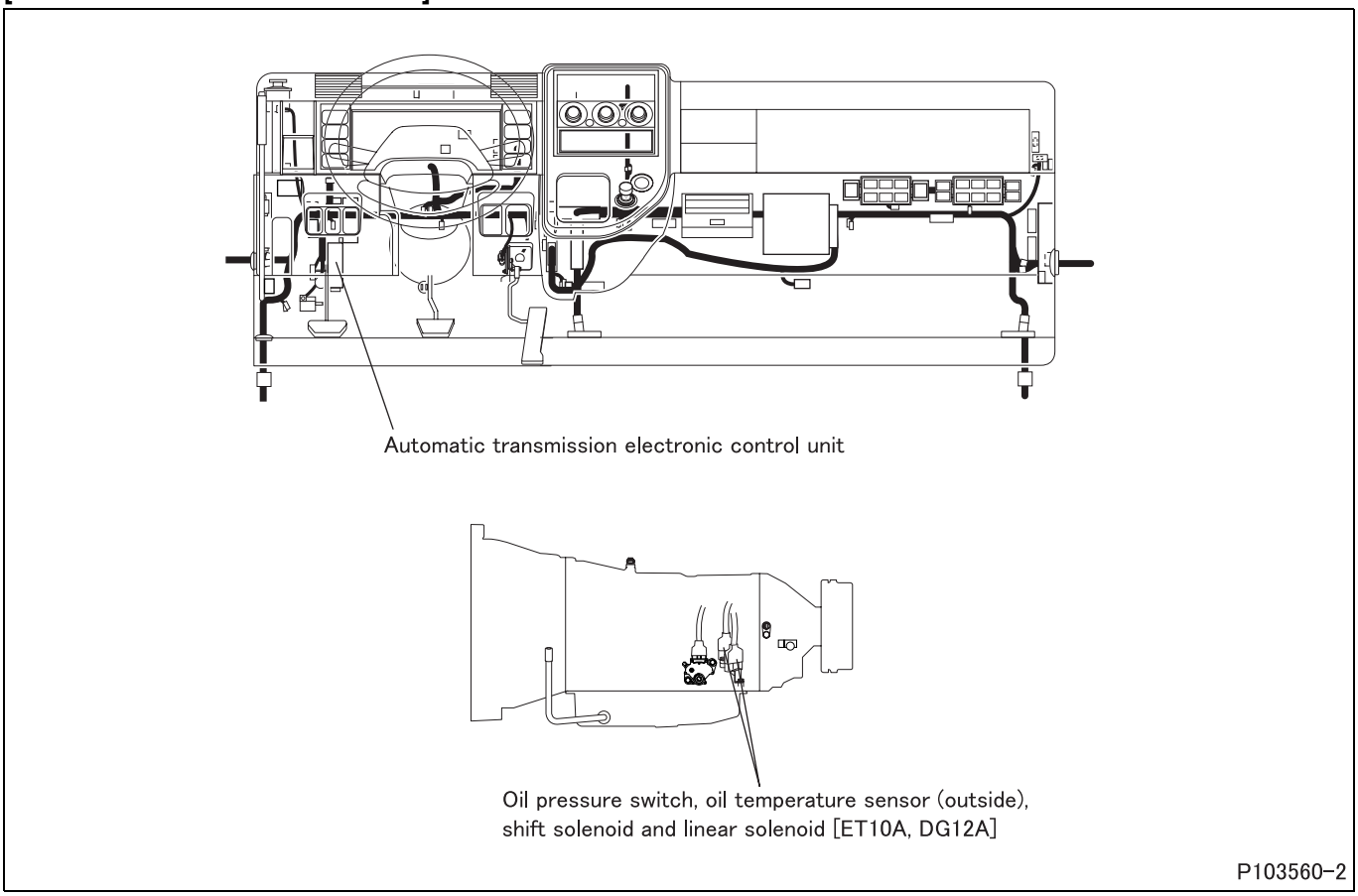

[Fault diagnosis]

- Perform checks in the sequence of the following steps.

Step 1	Inspection items		Inspection by control data
	Maintenance item		**<Multi-Use Tester not used>** Measure value of voltage between connector (CY31A) terminal No. 2 (+) and connector (CY24A) terminal No. 8 (–). **<Multi-Use Tester used>** Measure items No. 32 “Shift Valve 2” and No. 72 “Shift Valve Press 2” of Service Data.
	Inspection condition		**<Multi-Use Tester not used>** Measure from back side of harness connector with electronic control unit connected to harness.
	Requirements		**<Multi-Use Tester not used>** • In 4th, 5th, 6th gears: 12 V • In any gears except above: 0 V **<Multi-Use Tester used>** <No. 32 “Shift Valve 2”> • In 4th, 5th, 6th gears: ON • In any gears except above: OFF <No. 72 “Shift Valve Press 2”> • In 4th, 5th, 6th gears: HIGH • In any gears except above: LOW
	Inspection result (Is the judging standard satisfied?)	YES	Go to transient fault (See Gr00.).
		NO	Go to step 2.

Step 2	Inspection items		Inspection by electronic control unit connector (signal)
	Maintenance item		Measure value of resistance between connector (CY31A) terminal No. 2 and chassis ground.
	Inspection condition		• Disconnect electronic control unit and harness, and measure from connection side of harness connector. • Starter switch: OFF
	Requirements		13 ± 2 Ω
	Inspection result (Is the judging standard satisfied?)	YES	Go to step 3.
		NO	Go to step 4.

Step 3	Inspection items		Inspection of electronic control unit connector
	Maintenance item		Inspection of connector
	Inspection condition		–
	Requirements		• Connector is properly connected. • No trace of water entry is found. • No corrosion is found in terminal. • Connection to terminal is appropriate.
	Inspection result (Is the judging standard satisfied?)	YES	Go to step 7.
		NO	Modify connector.

Step 4	Inspection items		Inspection of solenoid connector
	Maintenance item		Inspection of connector
	Inspection condition		–
	Requirements		• Connector is properly connected. • No trace of water entry is found. • No corrosion is found in terminal. • Connection to terminal is appropriate.
	Inspection result (Is the judging standard satisfied?)	YES	Go to step 5.
		NO	Modify connector.

Step 5	Inspection items		Inspection of solenoid unit
	Maintenance item		Measure value of resistance between connector (DG12A) terminal No. 3 and automatic transmission case.
	Inspection condition		• Disconnect connector, and measure solenoid side terminal. • Starter switch: OFF
	Requirements		13 ± 2 Ω
	Inspection result (Is the judging standard satisfied?)	YES	Go to step 6.
		NO	Replacement of automatic transmission

<Step 5 inspection diagram>

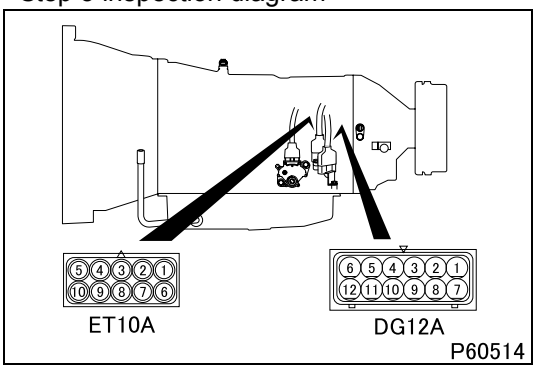

Step 6	Inspection items		Inspection of harness between solenoid and electronic control unit (power supply)
	Maintenance item		Check circuit between connector (DG12A) terminal No. 3 and electronic control unit connector (CY31A) terminal No. 2.
	Inspection condition		Disconnect each device from harness and measure from connection side of harness connector.
	Requirements		There is continuity.
	Inspection result (Is the judging standard satisfied?)	YES	Go to step 7.
		NO	Modify harness.

Step 7	Inspection items		Inspection by control data
	Maintenance item		**<Multi-Use Tester not used>** Measure value of voltage between connector (CY31A) terminal No. 2 (+) and connector (CY24A) terminal No. 8 (–). **<Multi-Use Tester used>** Measure items No. 32 “Shift Valve 2” and No. 72 “Shift Valve Press 2” of Service Data.
	Inspection condition		**<Multi-Use Tester not used>** Measure from back side of harness connector with electronic control unit connected to harness.
	Requirements		**<Multi-Use Tester not used>** • In 4th, 5th, 6th gears: 12 V • In any gears except above: 0 V **<Multi-Use Tester used>** <No. 32 “Shift Valve 2”> • In 4th, 5th, 6th gears: ON • In any gears except above: OFF <No. 72 “Shift Valve Press 2”> • In 4th, 5th, 6th gears: HIGH • In any gears except above: LOW
	Inspection result (Is the judging standard satisfied?)	YES	If the diagnosis code remains after actual run, replace the electronic control unit.
		NO	Replacement of electronic control unit

[Fault code]
Diagnosis code: P0977/Flash code: 32
[Monitor ID]
32
[Fault (outline)]
Failure of shift solenoid 2
[Diagnosis check]
- Resistance in the shift solenoid 2 is monitored for fault.

[Code generation condition]
- Resistance in the shift solenoid 2 remains at or above the specified value (100 kΩ) for 0.1 second (open-circuit or short-circuit in power supply side).

[Diagnosis check timing]
- Fault diagnosis is continuously performed.

[Diagnostic requirement]
- Continuous

[Control effected by electronic control unit during fault]
- Faulty solenoid is turned OFF
- Lockup control is turned OFF
- Control is effected on fixed speed gear output (5th).

[Probable cause of trouble]
- Short-circuit of harness between electronic control unit and shift solenoid 2
- Malfunction of each connector
- Malfunction of shift solenoid 2
- Malfunction of electronic control unit

[Recoverability]
- Recovered if signal becomes normal when starter switch is turned OFF to ON (power supply resumed to electronic control unit).

[Electronic Control Unit Connection Diagram]

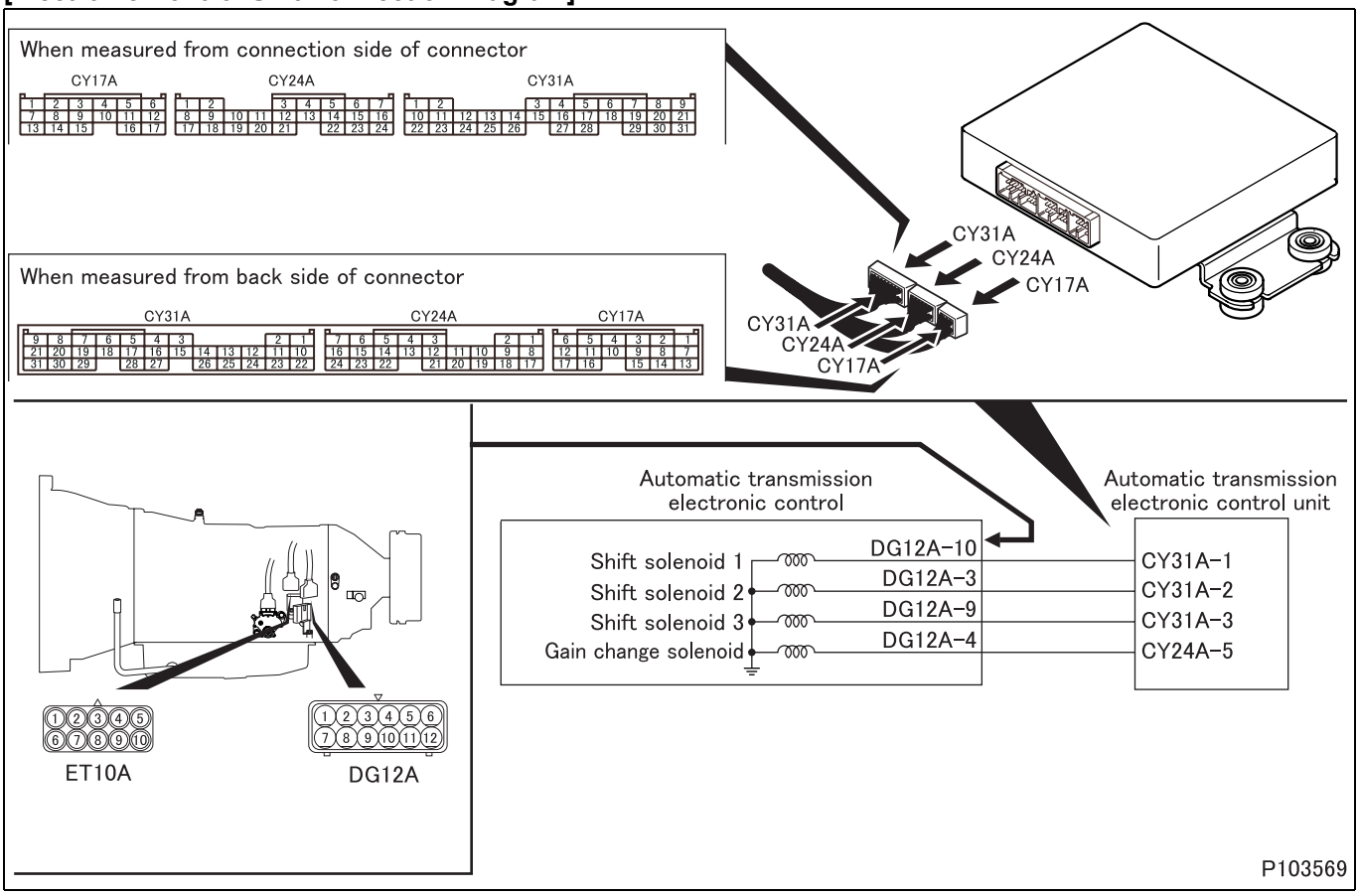

P103569

[Parts Identification and Location]

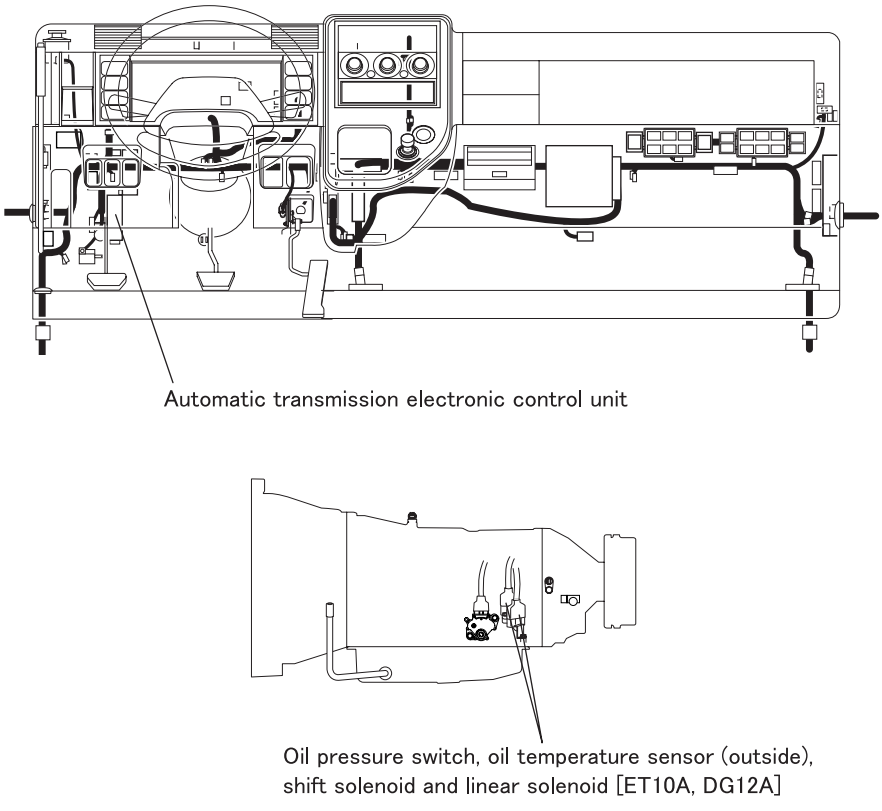

P103560-2

[Fault diagnosis]

- Perform checks in the sequence of the following steps.

Step 1	Inspection items		Inspection by control data
	Maintenance item		**<Multi-Use Tester not used>** Measure value of voltage between connector (CY31A) terminal No. 2 (+) and connector (CY24A) terminal No. 8 (–). **<Multi-Use Tester used>** Measure items No. 32 “Shift Valve 2” and No. 72 “Shift Valve Press 2” of Service Data.
	Inspection condition		**<Multi-Use Tester not used>** Measure from back side of harness connector with electronic control unit connected to harness.
	Requirements		**<Multi-Use Tester not used>** • In 4th, 5th, 6th gears: 12 V • In any gears except above: 0 V **<Multi-Use Tester used>** <No. 32 “Shift Valve 2”> • In 4th, 5th, 6th gears: ON • In any gears except above: OFF <No. 72 “Shift Valve Press 2”> • In 4th, 5th, 6th gears: HIGH • In any gears except above: LOW
	Inspection result (Is the judging standard satisfied?)	YES	Go to transient fault (See Gr00.).
		NO	Go to step 2.

Step 2	Inspection items		Inspection by electronic control unit connector (signal)
	Maintenance item		Measure value of resistance between connector (CY31A) terminal No. 2 and chassis ground.
	Inspection condition		• Disconnect electronic control unit and harness, and measure from connection side of harness connector. • Starter switch: OFF
	Requirements		13 ± 2 Ω
	Inspection result (Is the judging standard satisfied?)	YES	Go to step 3.
		NO	Go to step 4.

Step 3	Inspection items		Inspection of electronic control unit connector
	Maintenance item		Inspection of connector
	Inspection condition		–
	Requirements		• Connector is properly connected. • No trace of water entry is found. • No corrosion is found in terminal. • Connection to terminal is appropriate.
	Inspection result (Is the judging standard satisfied?)	YES	Go to step 7.
		NO	Modify connector.

Step 4	Inspection items		Inspection of solenoid connector
	Maintenance item		Inspection of connector
	Inspection condition		–
	Requirements		• Connector is properly connected. • No trace of water entry is found. • No corrosion is found in terminal. • Connection to terminal is appropriate.
	Inspection result (Is the judging standard satisfied?)	YES	Go to step 5.
		NO	Modify connector.

Step 5	Inspection items		Inspection of solenoid unit
	Maintenance item		Measure value of resistance between connector (DG12A) terminal No. 3 and automatic transmission case.
	Inspection condition		• Disconnect connector, and measure solenoid side terminal. • Starter switch: OFF
	Requirements		13 ± 2 Ω
	Inspection result (Is the judging standard satisfied?)	YES	Go to step 6.
		NO	Replacement of automatic transmission

<Step 5 inspection diagram>

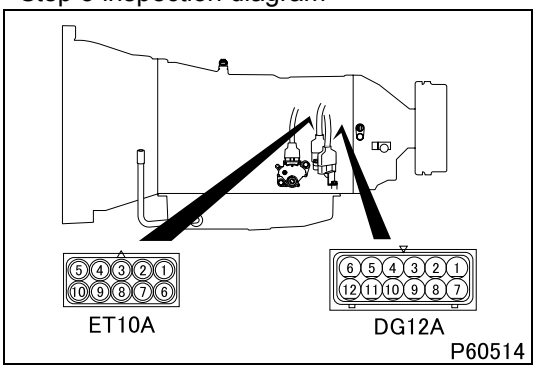

Step 6	Inspection items		Inspection of harness between solenoid and electronic control unit (power supply)
	Maintenance item		Check circuit between connector (DG12A) terminal No. 3 and electronic control unit connector (CY31A) terminal No. 2.
	Inspection condition		Disconnect each device from harness and measure from connection side of harness connector.
	Requirements		There is continuity.
	Inspection result (Is the judging standard satisfied?)	YES	Go to step 7.
		NO	Modify harness.

Step 7	Inspection items		Inspection by control data
	Maintenance item		**<Multi-Use Tester not used>** Measure value of voltage between connector (CY31A) terminal No. 2 (+) and connector (CY24A) terminal No. 8 (–). **<Multi-Use Tester used>** Measure items No. 32 “Shift Valve 2” and No. 72 “Shift Valve Press 2” of Service Data.
	Inspection condition		**<Multi-Use Tester not used>** Measure from back side of harness connector with electronic control unit connected to harness.
	Requirements		**<Multi-Use Tester not used>** • In 4th, 5th, 6th gears: 12 V • In any gears except above: 0 V **<Multi-Use Tester used>** <No. 32 “Shift Valve 2”> • In 4th, 5th, 6th gears: ON • In any gears except above: OFF <No. 72 “Shift Valve Press 2”> • In 4th, 5th, 6th gears: HIGH • In any gears except above: LOW
	Inspection result (Is the judging standard satisfied?)	YES	If the diagnosis code remains after actual run, replace the electronic control unit.
		NO	Replacement of electronic control unit

[Fault code]
Diagnosis code: P0979/Flash code: 33
[Monitor ID]
33
[Fault (outline)]
Failure of shift solenoid 3
[Diagnosis check]
- Current in the shift solenoid 3 is monitored for fault.

[Code generation condition]
- Current in the shift solenoid 3 remains at or above the specified value (4A) for 0.1 second (short-circuit in ground side).

[Diagnosis check timing]
- Fault diagnosis is continuously performed.

[Diagnostic requirement]
- Continuous

[Control effected by electronic control unit during fault]
- Lockup control is turned OFF
- Control is effected on fixed speed gear output (3rd).

[Probable cause of trouble]
- Short-circuit of harness between electronic control unit and shift solenoid 3
- Malfunction of each connector
- Malfunction of shift solenoid 3
- Malfunction of electronic control unit

[Recoverability]
- Recovered if signal becomes normal when starter switch is turned OFF to ON (power supply resumed to electronic control unit).

[Electronic Control Unit Connection Diagram]

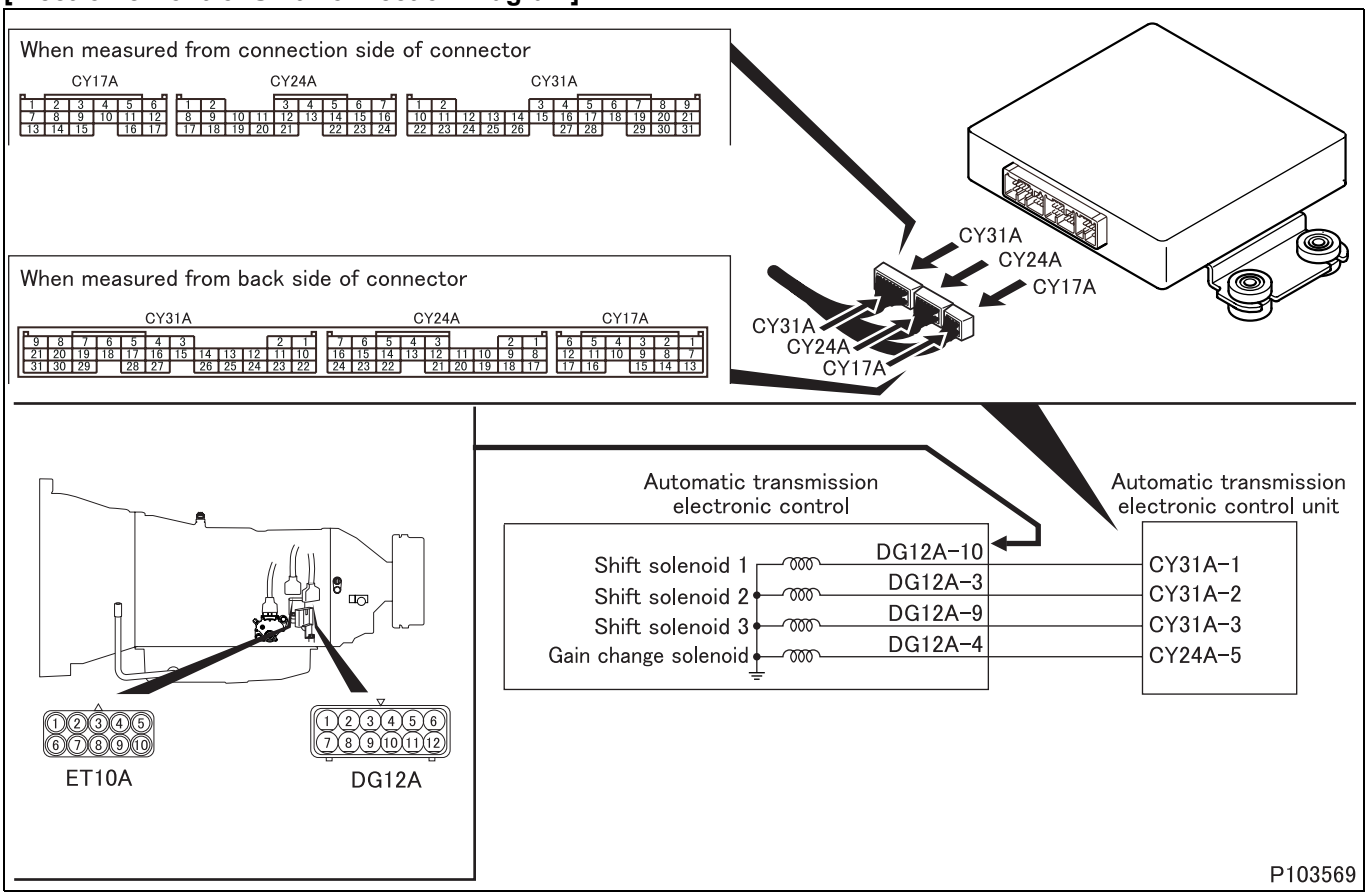

P103569

[Parts Identification and Location]

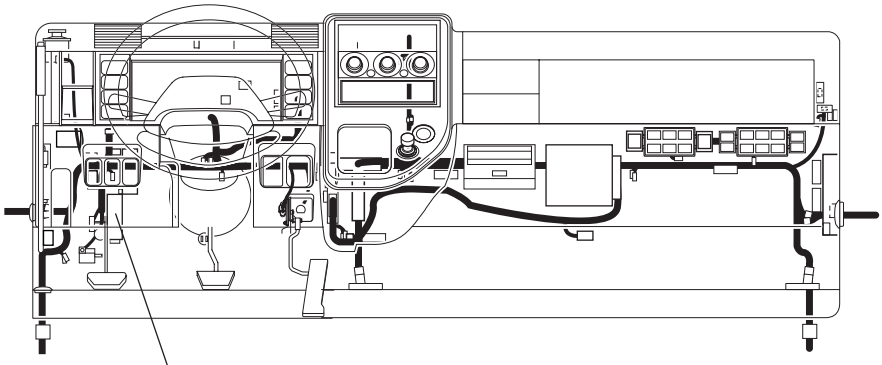

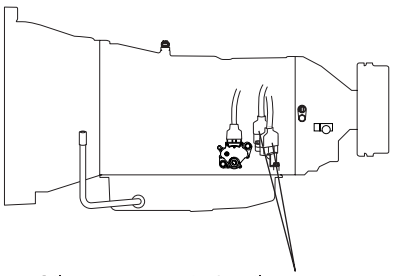

P103560-2

[Fault diagnosis]

- Perform checks in the sequence of the following steps.

Step 1	Inspection items		Inspection by control data
	Maintenance item		**<Multi-Use Tester not used>** Measure value of voltage between connector (CY31A) terminal No. 3 (+) and connector (CY24A) terminal No. 8 (–). **<Multi-Use Tester used>** Measure items No. 33 “Shift Valve 3” and No. 73 “Shift Valve Press 3” of Service Data.
	Inspection condition		**<Multi-Use Tester not used>** Measure from back side of harness connector with electronic control unit connected to harness.
	Requirements		**<Multi-Use Tester not used>** • In 1st gear: 12 V • In any gears except above: 0 V **<Multi-Use Tester used>** <No. 33 “Shift Valve 3”> • In 1st gear: ON • In any gears except above: OFF <No. 73 “Shift Valve Press 3”> • In 1st gear: HIGH • In any gears except above: LOW
	Inspection result (Is the judging standard satisfied?)	YES	Go to transient fault (See Gr00.).
		NO	Go to step 2.

Step 2	Inspection items		Inspection by electronic control unit connector (signal)
	Maintenance item		Measure value of resistance between connector (CY31A) terminal No. 3 and chassis ground.
	Inspection condition		• Disconnect electronic control unit and harness, and measure from connection side of harness connector. • Starter switch: OFF
	Requirements		13 ± 2 Ω
	Inspection result (Is the judging standard satisfied?)	YES	Go to step 3.
		NO	Go to step 4.

Step 3	Inspection items		Inspection of electronic control unit connector
	Maintenance item		Inspection of connector
	Inspection condition		–
	Requirements		• Connector is properly connected. • No trace of water entry is found. • No corrosion is found in terminal. • Connection to terminal is appropriate.
	Inspection result (Is the judging standard satisfied?)	YES	Go to step 7.
		NO	Modify connector.

Step 4	Inspection items		Inspection of solenoid connector
	Maintenance item		Inspection of connector
	Inspection condition		–
	Requirements		• Connector is properly connected. • No trace of water entry is found. • No corrosion is found in terminal. • Connection to terminal is appropriate.
	Inspection result (Is the judging standard satisfied?)	YES	Go to step 5.
		NO	Modify connector.

Step 5	Inspection items		Inspection of solenoid unit
	Maintenance item		Measure value of resistance between connector (DG12A) terminal No. 9 and automatic transmission case.
	Inspection condition		• Disconnect connector, and measure solenoid side terminal. • Starter switch: OFF
	Requirements		13 ± 2 Ω
	Inspection result (Is the judging standard satisfied?)	YES	Go to step 6.
		NO	Replacement of automatic transmission

<Step 5 inspection diagram>

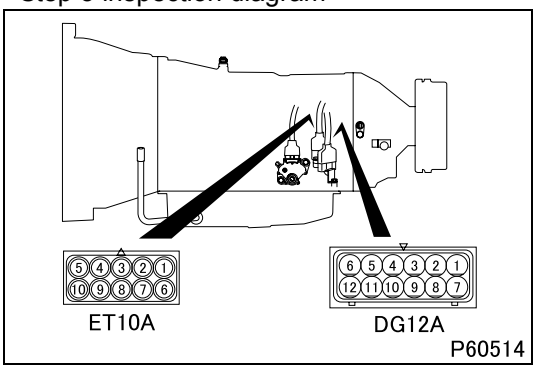

Step 6	Inspection items		Inspection of harness between solenoid and electronic control unit (power supply)
	Maintenance item		Check circuit between connector (DG12A) terminal No. 9 and electronic control unit connector (CY31A) terminal No. 3.
	Inspection condition		Disconnect each device from harness and measure from connection side of harness connector.
	Requirements		There is continuity.
	Inspection result (Is the judging standard satisfied?)	YES	Go to step 7.
		NO	Modify harness.

Step 7	Inspection items		Inspection by control data
	Maintenance item		**<Multi-Use Tester not used>** Measure value of voltage between connector (CY31A) terminal No. 3 (+) and connector (CY24A) terminal No. 8 (–). **<Multi-Use Tester used>** Measure items No. 33 “Shift Valve 3” and No. 73 “Shift Valve Press 3” of Service Data.
	Inspection condition		**<Multi-Use Tester not used>** Measure from back side of harness connector with electronic control unit connected to harness.
	Requirements		**<Multi-Use Tester not used>** • In 1st gear: 12 V • In any gears except above: 0 V **<Multi-Use Tester used>** <No. 33 “Shift Valve 3”> • In 1st gear: ON • In any gears except above: OFF <No. 73 “Shift Valve Press 3”> • In 1st gear: HIGH • In any gears except above: LOW
	Inspection result (Is the judging standard satisfied?)	YES	If the diagnosis code remains after actual run, replace the electronic control unit.
		NO	Replacement of electronic control unit

[Fault code]
Diagnosis code: P0980/Flash code: 33
[Monitor ID]
34
[Fault (outline)]
Failure of shift solenoid 3
[Diagnosis check]
- Resistance in the shift solenoid 3 is monitored for fault.

[Code generation condition]
- Resistance in the shift solenoid 3 remains at or above the specified value (100 kΩ) for 0.1 second (open-circuit or short-circuit in power supply side).

[Diagnosis check timing]
- Fault diagnosis is continuously performed.

[Diagnostic requirement]
- Continuous

[Control effected by electronic control unit during fault]
- Lockup control is turned OFF
- Control is effected on fixed speed gear output (2nd).

[Probable cause of trouble]
- Short-circuit of harness between electronic control unit and shift solenoid 3
- Malfunction of each connector
- Malfunction of shift solenoid 3
- Malfunction of electronic control unit

[Recoverability]
- Recovered if signal becomes normal when starter switch is turned OFF to ON (power supply resumed to electronic control unit).

[Electronic Control Unit Connection Diagram]

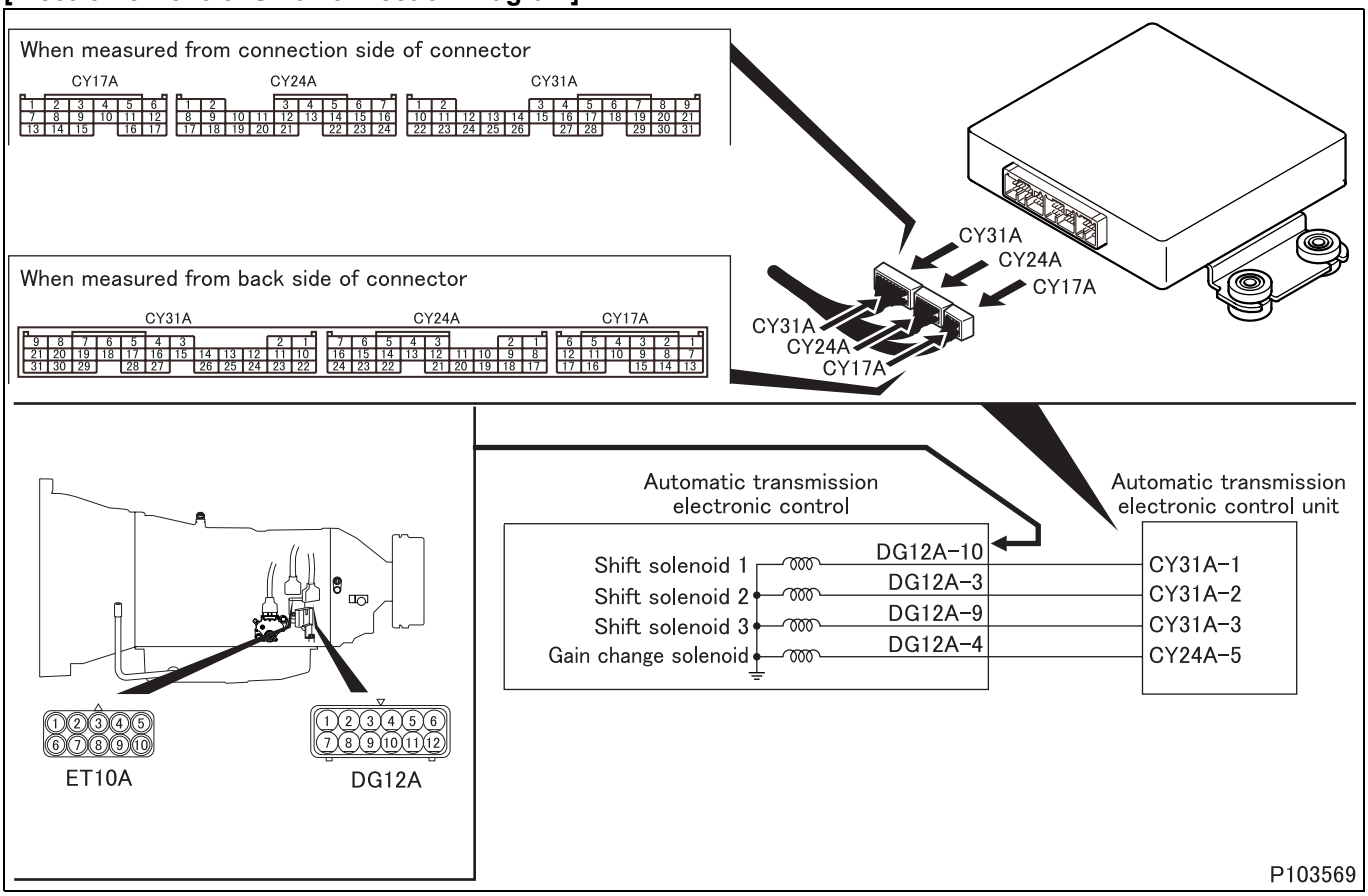

P103569

[Parts Identification and Location]

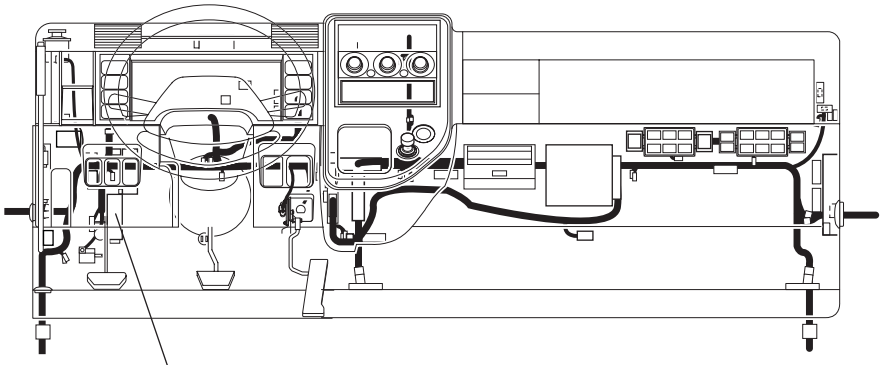

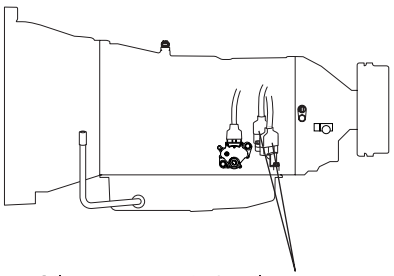

P103560-2

[Fault diagnosis]

- Perform checks in the sequence of the following steps.

Step 1	Inspection items		Inspection by control data
	Maintenance item		**<Multi-Use Tester not used>** Measure value of voltage between connector (CY31A) terminal No. 3 (+) and connector (CY24A) terminal No. 8 (–). **<Multi-Use Tester used>** Measure items No. 33 “Shift Valve 3” and No. 73 “Shift Valve Press 3” of Service Data.
	Inspection condition		**<Multi-Use Tester not used>** Measure from back side of harness connector with electronic control unit connected to harness.
	Requirements		**<Multi-Use Tester not used>** • In 1st gear: 12 V • In any gears except above: 0 V **<Multi-Use Tester used>** <No.33 “Shift Valve 3”> • In 1st gear: ON • In any gears except above: OFF <No. 73 “Shift Valve Press 3”> • In 1st gear: HIGH • In any gears except above: LOW
	Inspection result (Is the judging standard satisfied?)	YES	Go to transient fault (See Gr00.).
		NO	Go to step 2.

Step 2	Inspection items		Inspection by electronic control unit connector (signal)
	Maintenance item		Measure value of resistance between connector (CY31A) terminal No. 3 and chassis ground.
	Inspection condition		• Disconnect electronic control unit and harness, and measure from connection side of harness connector. • Starter switch: OFF
	Requirements		13 ± 2 Ω
	Inspection result (Is the judging standard satisfied?)	YES	Go to step 3.
		NO	Go to step 4.

Step 3	Inspection items		Inspection of electronic control unit connector
	Maintenance item		Inspection of connector
	Inspection condition		–
	Requirements		• Connector is properly connected. • No trace of water entry is found. • No corrosion is found in terminal. • Connection to terminal is appropriate.
	Inspection result (Is the judging standard satisfied?)	YES	Go to step 7.
		NO	Modify connector.

Step 4	Inspection items		Inspection of solenoid connector
	Maintenance item		Inspection of connector
	Inspection condition		–
	Requirements		• Connector is properly connected. • No trace of water entry is found. • No corrosion is found in terminal. • Connection to terminal is appropriate.
	Inspection result (Is the judging standard satisfied?)	YES	Go to step 5.
		NO	Modify connector.

Step 5	Inspection items		Inspection of solenoid unit
	Maintenance item		Measure value of resistance between connector (DG12A) terminal No. 9 and automatic transmission case.
	Inspection condition		• Disconnect connector, and measure solenoid side terminal. • Starter switch: OFF
	Requirements		13 ± 2 Ω
	Inspection result (Is the judging standard satisfied?)	YES	Go to step 6.
		NO	Replacement of automatic transmission

<Step 5 inspection diagram>

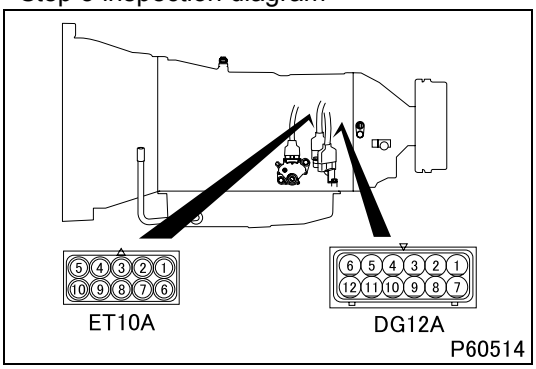

Step 6	Inspection items		Inspection of harness between solenoid and electronic control unit (power supply)
	Maintenance item		Check circuit between connector (DG12A) terminal No. 9 and electronic control unit connector (CY31A) terminal No. 3.
	Inspection condition		Disconnect each device from harness and measure from connection side of harness connector.
	Requirements		There is continuity.
	Inspection result (Is the judging standard satisfied?)	YES	Go to step 7.
		NO	Modify harness.

Step 7	Inspection items		Inspection by control data
	Maintenance item		**<Multi-Use Tester not used>** Measure value of voltage between connector (CY31A) terminal No. 3 (+) and connector (CY24A) terminal No. 8 (–). **<Multi-Use Tester used>** Measure items No. 33 “Shift Valve 3” and No. 73 “Shift Valve Press 3” of Service Data.
	Inspection condition		**<Multi-Use Tester not used>** Measure from back side of harness connector with electronic control unit connected to harness.
	Requirements		**<Multi-Use Tester not used>** • In 1st gear: 12 V • In any gears except above: 0 V **<Multi-Use Tester used>** <No.33 “Shift Valve 3”> • In 1st gear: ON • In any gears except above: OFF <No. 73 “Shift Valve Press 3”> • In 1st gear: HIGH • In any gears except above: LOW
	Inspection result (Is the judging standard satisfied?)	YES	If the diagnosis code remains after actual run, replace the electronic control unit.
		NO	Replacement of electronic control unit

[Fault code]
Diagnosis code: P0985/Flash code: 52
[Monitor ID]
None
[Fault (outline)]
Failure of gain change solenoid
[Diagnosis check]
- Current in the gain change solenoid is monitored for fault.

[Code generation condition]
- Current in the gain change solenoid remains at or above the specified value (4A) for 0.1 second (short-circuit in ground side).

[Diagnosis check timing]
- Fault diagnosis is continuously performed.

[Diagnostic requirement]
- Continuous

[Control effected by electronic control unit during fault]
- Effects no special control (gearshifting performance is reduced).

[Probable cause of trouble]
- Short-circuit of harness between electronic control unit and gain change solenoid
- Malfunction of each connector
- Malfunction of gain change solenoid
- Malfunction of electronic control unit

[Recoverability]
- Recovered if signal becomes normal when starter switch is turned OFF to ON (power supply resumed to electronic control unit).

[Electronic Control Unit Connection Diagram]

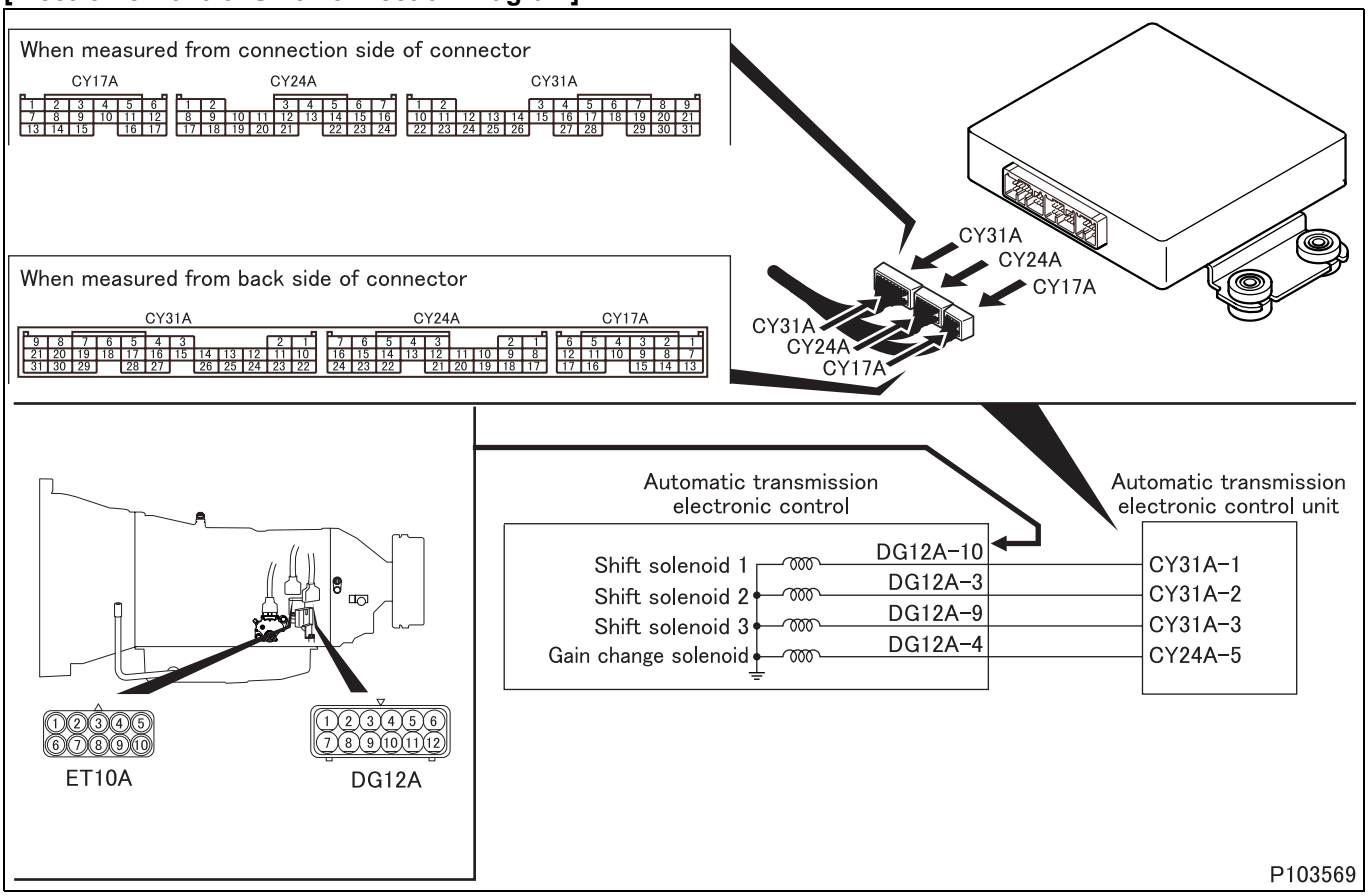

P103569

[Parts Identification and Location]

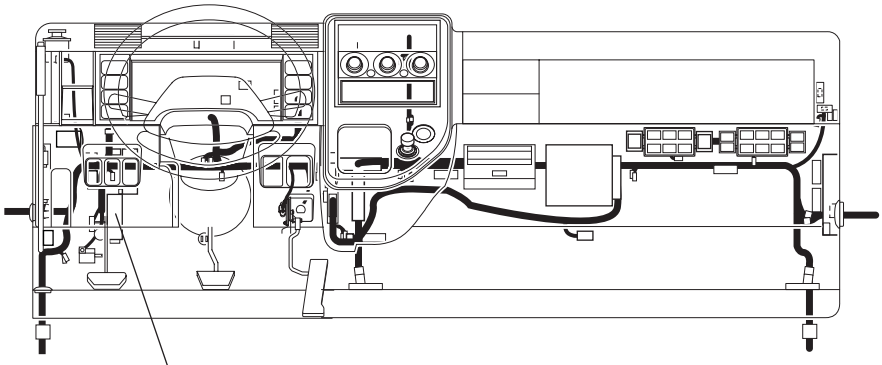

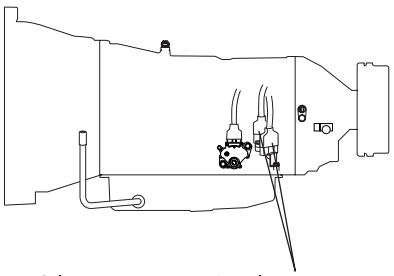

P103560-2

[Fault diagnosis]

- Perform checks in the sequence of the following steps.

Step 1	Inspection items		Inspection by control data
	Maintenance item		**<Multi-Use Tester not used>** Measure value of voltage between connector (CY24A) terminal No. 5 (+) and connector (CY24A) terminal No. 8 (–). **<Multi-Use Tester used>** Measure items No. 52 “Shift Valve 4” and No. 74 “Shift Valve Press 4” of Service Data.
	Inspection condition		**<Multi-Use Tester not used>** Measure from back side of harness connector with electronic control unit connected to harness.
	Requirements		**<Multi-Use Tester not used>** • In R range (high accelerator pedal position): 12 V • In R range (low accelerator pedal position): 0 V **<Multi-Use Tester used>** <No. 52 “Shift Valve 4”> • In R range (high accelerator pedal position): OFF • In R range (low accelerator pedal position): ON <No. 74 “Shift Valve Press 4”> • In R range (high accelerator pedal position): HIGH • In R range (low accelerator pedal position): LOW
	Inspection result (Is the judging standard satisfied?)	YES	Go to transient fault (See Gr00.).
		NO	Go to step 2.

Step 2	Inspection items		Inspection by electronic control unit connector (signal)
	Maintenance item		Measure value of resistance between connector (CY24A) terminal No. 5 and chassis ground.
	Inspection condition		• Disconnect electronic control unit and harness, and measure from connection side of harness connector. • Starter switch: OFF
	Requirements		13 ± 2 Ω
	Inspection result (Is the judging standard satisfied?)	YES	Go to step 3.
		NO	Go to step 4.

Step 3	Inspection items		Inspection of electronic control unit connector
	Maintenance item		Inspection of connector
	Inspection condition		–
	Requirements		• Connector is properly connected. • No trace of water entry is found. • No corrosion is found in terminal. • Connection to terminal is appropriate.
	Inspection result (Is the judging standard satisfied?)	YES	Go to step 7.
		NO	Modify connector.

Step 4	Inspection items		Inspection of solenoid connector
	Maintenance item		Inspection of connector
	Inspection condition		–
	Requirements		• Connector is properly connected. • No trace of water entry is found. • No corrosion is found in terminal. • Connection to terminal is appropriate.
	Inspection result (Is the judging standard satisfied?)	YES	Go to step 5.
		NO	Modify connector.

Step 5	Inspection items		Inspection of solenoid unit
	Maintenance item		Measure value of resistance between connector (DG12A) terminal No. 4 and automatic transmission case.
	Inspection condition		• Disconnect connector, and measure solenoid side terminal. • Starter switch: OFF
	Requirements		13 ± 2 Ω
	Inspection result (Is the judging standard satisfied?)	YES	Go to step 6.
		NO	Replacement of automatic transmission

<Step 5 inspection diagram>

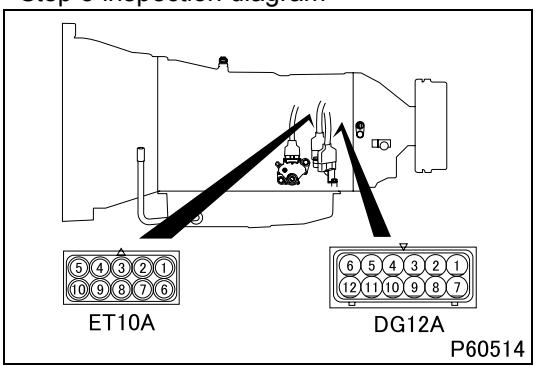

Step 6	Inspection items		Inspection of harness between solenoid and electronic control unit (power supply)
	Maintenance item		Check circuit between connector (DG12A) terminal No. 4 and electronic control unit connector (CY24A) terminal No. 5.
	Inspection condition		Disconnect each device from harness and measure from connection side of harness connector.
	Requirements		There is continuity.
	Inspection result (Is the judging standard satisfied?)	YES	Go to step 7.
		NO	Modify harness.

Step 7	Inspection items		Inspection by control data
	Maintenance item		**<Multi-Use Tester not used>** Measure value of voltage between connector (CY24A) terminal No. 5 (+) and connector (CY24A) terminal No. 8 (–). **<Multi-Use Tester used>** Measure items No. 52 “Shift Valve 4” and No. 74 “Shift Valve Press 4” of Service Data.
	Inspection condition		**<Multi-Use Tester not used>** Measure from back side of harness connector with electronic control unit connected to harness.
	Requirements		**<Multi-Use Tester not used>** • In R range (high accelerator pedal position): 12 V • In R range (low accelerator pedal position): 0 V **<Multi-Use Tester used>** <No. 52 “Shift Valve 4”> • In R range (high accelerator pedal position): OFF • In R range (low accelerator pedal position): ON <No. 74 “Shift Valve Press 4”> • In R range (high accelerator pedal position): HIGH • In R range (low accelerator pedal position): LOW
	Inspection result (Is the judging standard satisfied?)	YES	If the diagnosis code remains after actual run, replace the electronic control unit.
		NO	Replacement of electronic control unit

[Fault code]
Diagnosis code: P0986/Flash code: 52
[Monitor ID]
35
[Fault (outline)]
Failure of gain change solenoid
[Diagnosis check]
- Resistance in the gain change solenoid is monitored for fault.

[Code generation condition]
- Resistance in the gain change solenoid remains at or above the specified value (100 kΩ) for 0.1 second (open-circuit or short-circuit in power supply side).

[Diagnosis check timing]
- Fault diagnosis is continuously performed.

[Diagnostic requirement]
- Continuous

[Control effected by electronic control unit during fault]
- Requested to send output signals to the engine electronic control unit during engine starting.

[Probable cause of trouble]
- Short-circuit of harness between electronic control unit and gain change solenoid
- Malfunction of each connector
- Malfunction of gain change solenoid
- Malfunction of electronic control unit

[Recoverability]
- Recovered if signal becomes normal when starter switch is turned OFF to ON (power supply resumed to electronic control unit).

[Electronic Control Unit Connection Diagram]

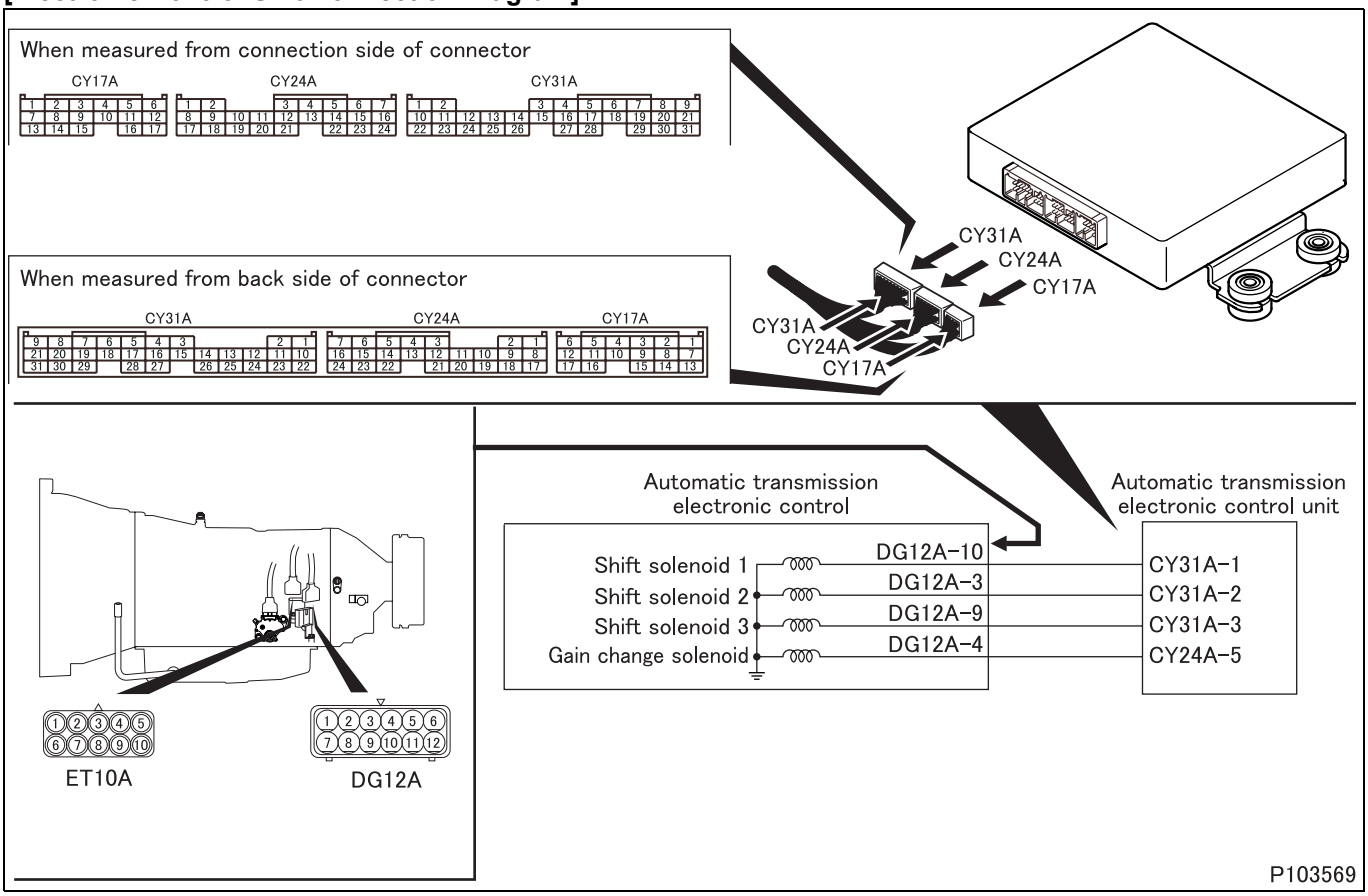

P103569

[Parts Identification and Location]

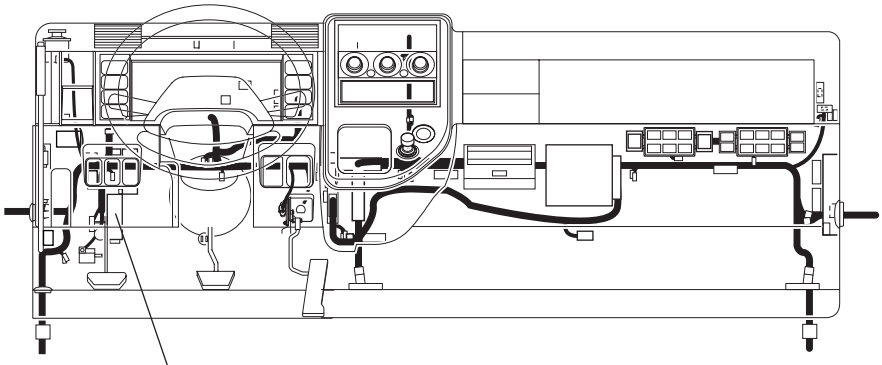

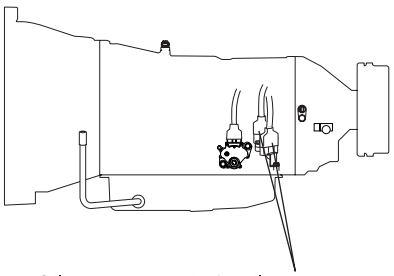

P103560-2

[Fault diagnosis]

- Perform checks in the sequence of the following steps.

Step 1	Inspection items		Inspection by control data
	Maintenance item		**<Multi-Use Tester not used>** Measure value of voltage between connector (CY24A) terminal No. 5 (+) and connector (CY24A) terminal No. 8 (–). **<Multi-Use Tester used>** Measure items No. 52 “Shift Valve 4” and No. 74 “Shift Valve Press 4” of Service Data.
	Inspection condition		**<Multi-Use Tester not used>** Measure from back side of harness connector with electronic control unit connected to harness.
	Requirements		**<Multi-Use Tester not used>** • In R range (high accelerator pedal position): 12 V • In R range (low accelerator pedal position): 0 V **<Multi-Use Tester used>** <No. 52 “Shift Valve 4”> • In R range (high accelerator pedal position): OFF • In R range (low accelerator pedal position): ON <No. 74 “Shift Valve Press 4”> • In R range (high accelerator pedal position): HIGH • In R range (low accelerator pedal position): LOW
	Inspection result (Is the judging standard satisfied?)	YES	Go to transient fault (See Gr00.).
		NO	Go to step 2.

Step 2	Inspection items		Inspection by electronic control unit connector (signal)
	Maintenance item		Measure value of resistance between connector (CY24A) terminal No. 5 and chassis ground.
	Inspection condition		• Disconnect electronic control unit and harness, and measure from connection side of harness connector. • Starter switch: OFF
	Requirements		13 ± 2 Ω
	Inspection result (Is the judging standard satisfied?)	YES	Go to step 3.
		NO	Go to step 4.

Step 3	Inspection items		Inspection of electronic control unit connector
	Maintenance item		Inspection of connector
	Inspection condition		–
	Requirements		• Connector is properly connected. • No trace of water entry is found. • No corrosion is found in terminal. • Connection to terminal is appropriate.
	Inspection result (Is the judging standard satisfied?)	YES	Go to step 7.
		NO	Modify connector.

Step 4	Inspection items		Inspection of solenoid connector
	Maintenance item		Inspection of connector
	Inspection condition		–
	Requirements		• Connector is properly connected. • No trace of water entry is found. • No corrosion is found in terminal. • Connection to terminal is appropriate.
	Inspection result (Is the judging standard satisfied?)	YES	Go to step 5.
		NO	Modify connector.

Step 5	Inspection items		Inspection of solenoid unit
	Maintenance item		Measure value of resistance between connector (DG12A) terminal No. 4 and automatic transmission case.
	Inspection condition		• Disconnect connector, and measure solenoid side terminal. • Starter switch: OFF
	Requirements		13 ± 2 Ω
	Inspection result (Is the judging standard satisfied?)	YES	Go to step 6.
		NO	Replacement of automatic transmission

<Step 5 inspection diagram>

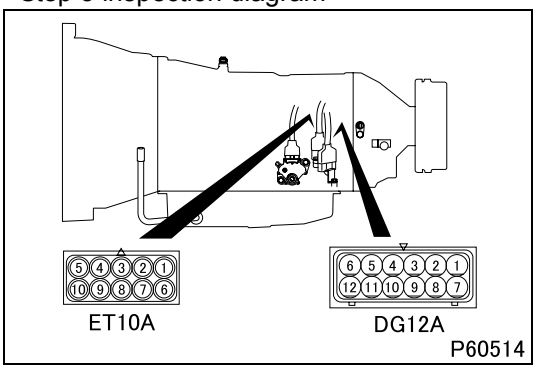

Step 6	Inspection items		Inspection of harness between solenoid and electronic control unit (power supply)
	Maintenance item		Check circuit between connector (DG12A) terminal No. 4 and electronic control unit connector (CY24A) terminal No. 5.
	Inspection condition		Disconnect each device from harness and measure from connection side of harness connector.
	Requirements		There is continuity.
	Inspection result (Is the judging standard satisfied?)	YES	Go to step 7.
		NO	Modify harness.

Step 7	Inspection items		Inspection by control data
	Maintenance item		**<Multi-Use Tester not used>** Measure value of voltage between connector (CY24A) terminal No. 5 (+) and connector (CY24A) terminal No. 8 (–). **<Multi-Use Tester used>** Measure items No. 52 “Shift Valve 4” and No. 74 “Shift Valve Press 4” of Service Data.
	Inspection condition		**<Multi-Use Tester not used>** Measure from back side of harness connector with electronic control unit connected to harness.
	Requirements		**<Multi-Use Tester not used>** • In R range (high accelerator pedal position): 12 V • In R range (low accelerator pedal position): 0 V **<Multi-Use Tester used>** <No. 52 “Shift Valve 4”> • In R range (high accelerator pedal position): OFF • In R range (low accelerator pedal position): ON <No. 74 “Shift Valve Press 4”> • In R range (high accelerator pedal position): HIGH • In R range (low accelerator pedal position): LOW
	Inspection result (Is the judging standard satisfied?)	YES	If the diagnosis code remains after actual run, replace the electronic control unit.
		NO	Replacement of electronic control unit

[Fault code]
Diagnosis code: P0989/Flash code: 47
[Monitor ID]
62
[Fault (outline)]
Failure of oil pressure switch 5
[Diagnosis check]
- Oil pressure switch 5 is monitored for fault when the shift solenoid 3 is energized (high pressure).

[Code generation condition]
- Oil pressure switch 5 remains OFF (low pressure) for 0.1 second.

[Diagnosis check timing]
- Fault diagnosis is performed each time when the control is activated.

[Diagnostic requirement]
- Shift solenoid 3 is ON

[Control effected by electronic control unit during fault]
- Lockup control is turned OFF
- Control is effected on fixed speed gear output (2nd).

[Probable cause of trouble]
- Open-circuit or short-circuit of harness between electronic control unit and oil pressure switch 5 or shift solenoid 3
- Malfunction of each connector
- Malfunction of oil pressure switch 5 or shift solenoid 3
- Malfunction of electronic control unit

[Recoverability]
- Recovered if signal becomes normal when starter switch is turned OFF to ON (power supply resumed to electronic control unit).

[Electronic Control Unit Connection Diagram]

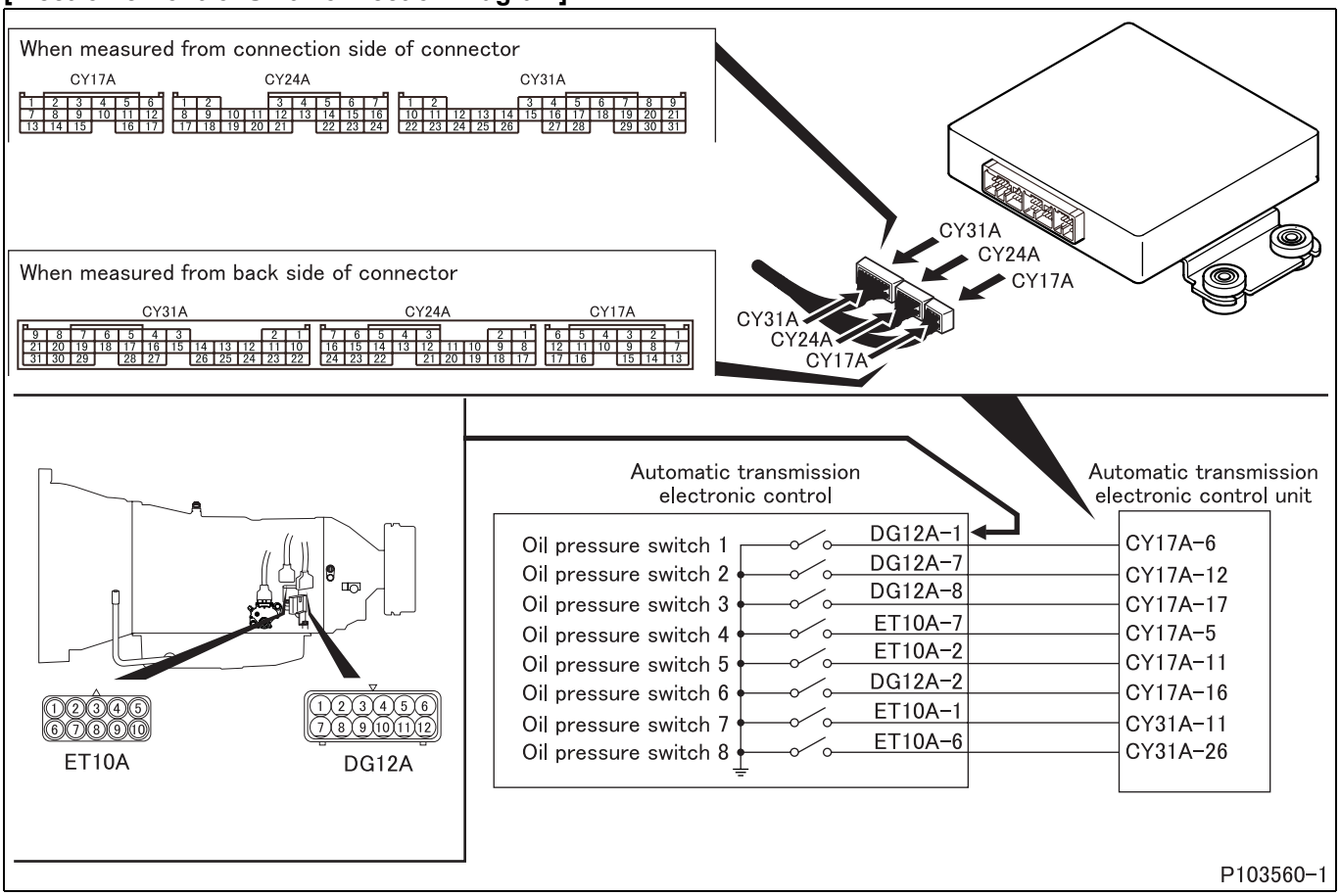

P103560-1

[Parts Identification and Location]

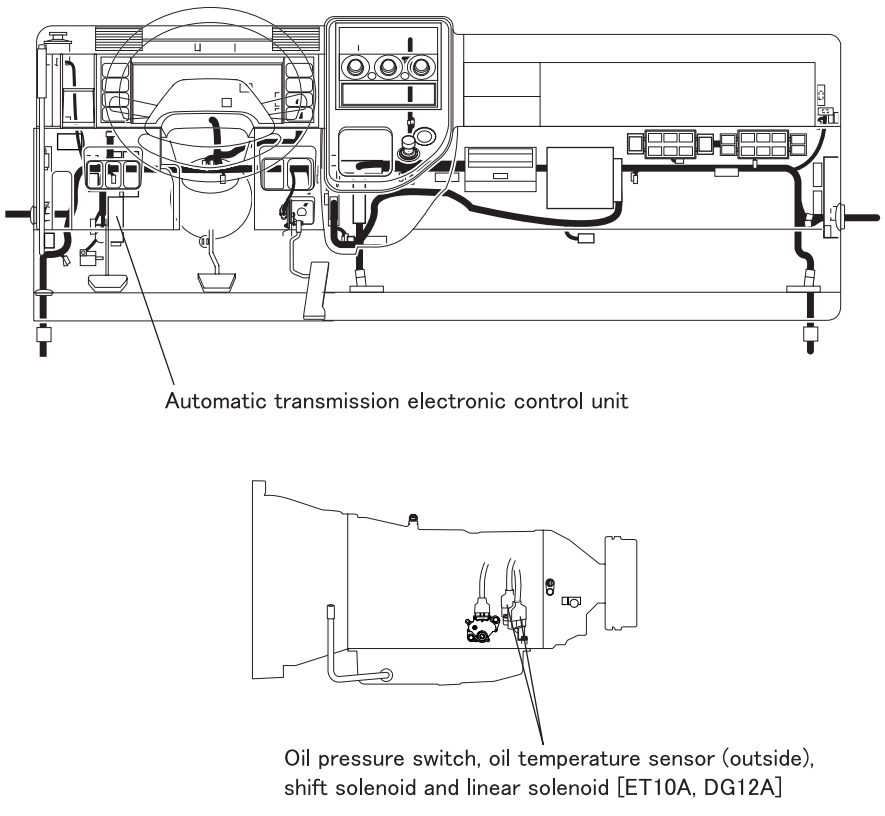

P103560-2

[Fault diagnosis]

- Perform checks in the sequence of the following steps.

Step 1	Inspection items		Inspection by control data
	Maintenance item		**<Multi-Use Tester not used>** Measure value of voltage between connector (CY17A) terminal No. 11 (+) and connector (CY24A) terminal No. 8 (–). **<Multi-Use Tester used>** Measure item No. 65 “Oil Press SW 5” of Service Data.
	Inspection condition		Engine in operation **<Multi-Use Tester not used>** Measure from back side of harness connector with electronic control unit connected to harness.
	Requirements		**<Multi-Use Tester not used>** • In 1st gear: 0 V • In 2nd, 3rd, 4th, 5th, 6th gears: 12 V **<Multi-Use Tester used>** • In 1st gear: ON • In 2nd, 3rd, 4th, 5th, 6th gears: OFF
	Inspection result (Is the judging standard satisfied?)	YES	Go to transient fault (See Gr00.).
		NO	Go to step 2.

Step 2	Inspection items		Inspection by electronic control unit connector (signal)
	Maintenance item		Measure continuity between connector (CY17A) terminal No. 11 and chassis ground.
	Inspection condition		• Disconnect electronic control unit and harness, and measure from connection side of harness connector. • Starter switch: OFF
	Requirements		There is no continuity.
	Inspection result (Is the judging standard satisfied?)	YES	Go to step 3.
		NO	Go to step 4.

Step 3	Inspection items		Inspection of electronic control unit connector
	Maintenance item		Inspection of connector
	Inspection condition		–
	Requirements		• Connector is properly connected. • No trace of water entry is found. • No corrosion is found in terminal. • Connection to terminal is appropriate.
	Inspection result (Is the judging standard satisfied?)	YES	Go to step 7.
		NO	Modify connector.

Step 4	Inspection items		Inspection of switch connector
	Maintenance item		Inspection of connector
	Inspection condition		–
	Requirements		• Connector is properly connected. • No trace of water entry is found. • No corrosion is found in terminal. • Connection to terminal is appropriate.
	Inspection result (Is the judging standard satisfied?)	YES	Go to step 5.
		NO	Modify connector.

Step 5	Inspection items		Inspection of switch unit
	Maintenance item		Check continuity between connector (ET10A) terminal No. 2 and automatic transmission case.
	Inspection condition		• Disconnect connector, and measure switch side terminal. • Starter switch: OFF
	Requirements		There is no continuity.
	Inspection result (Is the judging standard satisfied?)	YES	Go to step 6.
		NO	Replacement of automatic transmission

<Step 5 inspection diagram>

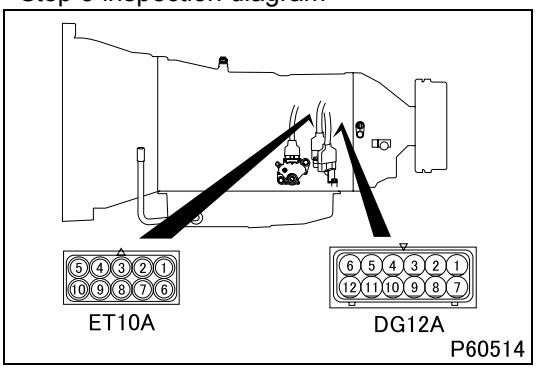

Step 6	Inspection items		Inspection of harness between switch and electronic control unit (signal)
	Maintenance item		Check circuit between connector (ET10A) terminal No. 2 and electronic control unit connector (CY17A) terminal No. 11.
	Inspection condition		Disconnect each device from harness and measure from connection side of harness connector.
	Requirements		There is continuity.
	Inspection result (Is the judging standard satisfied?)	YES	Go to step 7.
		NO	Modify harness.

Step 7	Inspection items		Inspection by control data
	Maintenance item		**<Multi-Use Tester not used>** Measure value of voltage between connector (CY17A) terminal No. 11 (+) and connector (CY24A) terminal No. 8 (–). **<Multi-Use Tester used>** Measure item No. 65 “Oil Press SW 5” of Service Data.
	Inspection condition		Engine in operation **<Multi-Use Tester not used>** Measure from back side of harness connector with electronic control unit connected to harness.
	Requirements		**<Multi-Use Tester not used>** • In 1st gear: 0 V • In 2nd, 3rd, 4th, 5th, 6th gears: 12 V **<Multi-Use Tester used>** • In 1st gear: ON • In 2nd, 3rd, 4th, 5th, 6th gears: OFF
	Inspection result (Is the judging standard satisfied?)	YES	Go to transient fault (See Gr00.).
		NO	• Check if a diagnosis code related to the shift solenoid 3 occurs. If it does, perform troubleshooting of the code. • Replacement of electronic control unit

[Fault code]
Diagnosis code: P0990/Flash code: 47
[Monitor ID]
61
[Fault (outline)]
Failure of oil pressure switch 5
[Diagnosis check]
- Oil pressure switch 5 is monitored for fault when the shift solenoid 3 is deenergized (low pressure).

[Code generation condition]
- Oil pressure switch 5 remains ON (high pressure) for 0.1 second.

[Diagnosis check timing]
- Fault diagnosis is performed each time when the control is activated.

[Diagnostic requirement]
- Shift solenoid 3 is OFF

[Control effected by electronic control unit during fault]
- Lockup control is turned OFF
- Control is effected on fixed speed gear output (2nd).

[Probable cause of trouble]
- Open-circuit or short-circuit of harness between electronic control unit and oil pressure switch 5 or shift solenoid 3
- Malfunction of each connector
- Malfunction of oil pressure switch 5 or shift solenoid 3
- Malfunction of electronic control unit

[Recoverability]
- Recovered if signal becomes normal when starter switch is turned OFF to ON (power supply resumed to electronic control unit).

[Electronic Control Unit Connection Diagram]

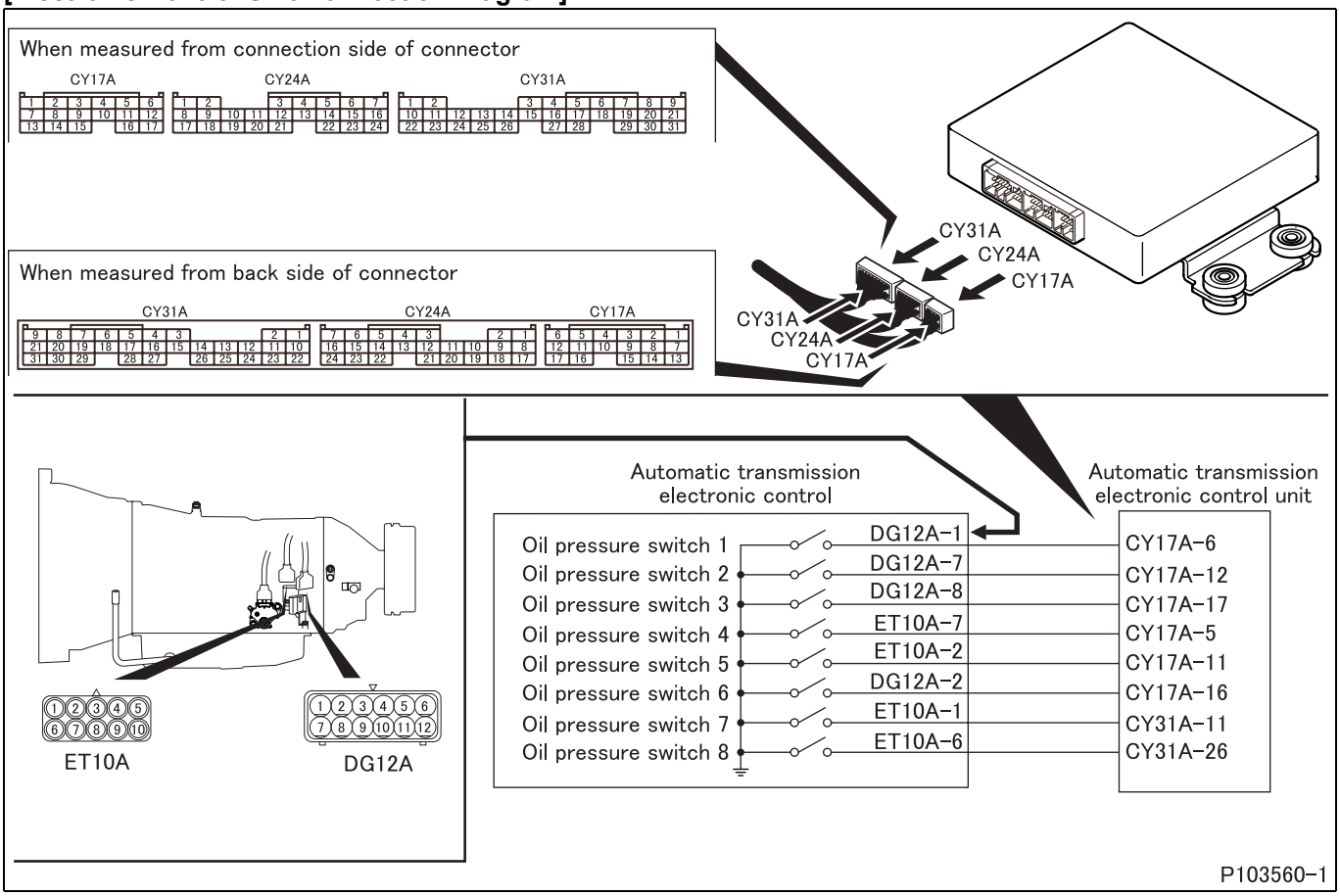

P103560-1

[Parts Identification and Location]

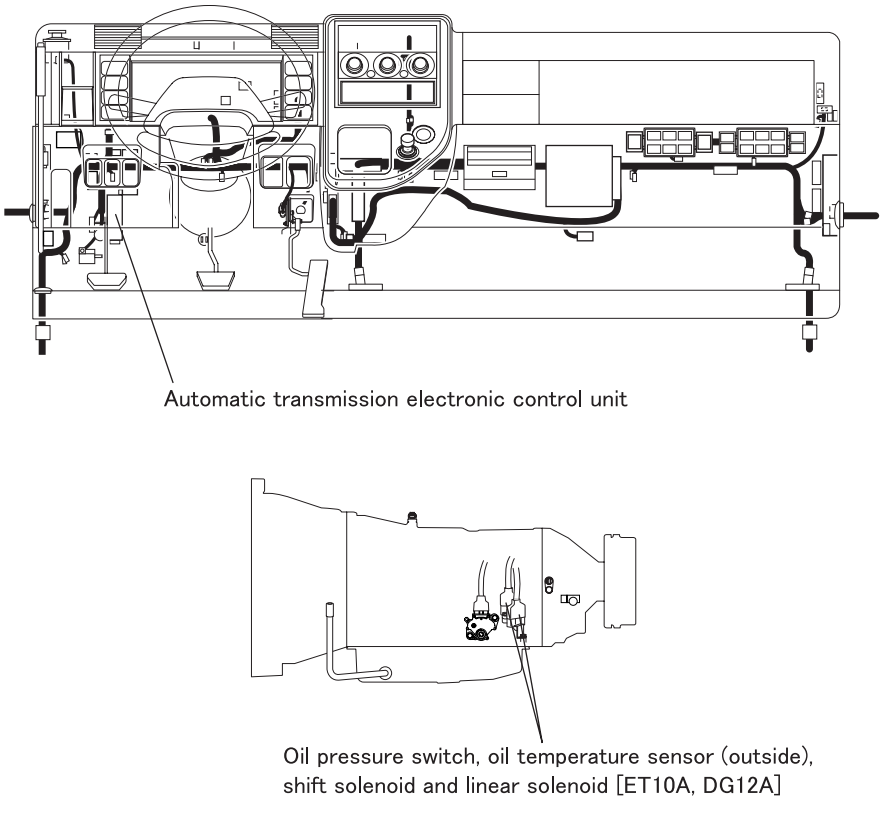

P103560-2

[Fault diagnosis]

- Perform checks in the sequence of the following steps.

Step 1	Inspection items		Inspection by control data
	Maintenance item		**<Multi-Use Tester not used>** Measure value of voltage between connector (CY17A) terminal No. 11 (+) and connector (CY24A) terminal No. 8 (–). **<Multi-Use Tester used>** Measure item No. 65 “Oil Press SW 5” of Service Data.
	Inspection condition		Engine in operation **<Multi-Use Tester not used>** Measure from back side of harness connector with electronic control unit connected to harness.
	Requirements		**<Multi-Use Tester not used>** • In 1st gear: 0 V • In 2nd, 3rd, 4th, 5th, 6th gears: 12 V **<Multi-Use Tester used>** • In 1st gear: ON • In 2nd, 3rd, 4th, 5th, 6th gears: OFF
	Inspection result (Is the judging standard satisfied?)	YES	Go to transient fault (See Gr00.).
		NO	Go to step 2.

Step 2	Inspection items		Inspection by electronic control unit connector (signal)
	Maintenance item		Measure continuity between connector (CY17A) terminal No. 11 and chassis ground.
	Inspection condition		• Disconnect electronic control unit and harness, and measure from connection side of harness connector. • Starter switch: OFF
	Requirements		There is no continuity.
	Inspection result (Is the judging standard satisfied?)	YES	Go to step 3.
		NO	Go to step 4.

Step 3	Inspection items		Inspection of electronic control unit connector
	Maintenance item		Inspection of connector
	Inspection condition		–
	Requirements		• Connector is properly connected. • No trace of water entry is found. • No corrosion is found in terminal. • Connection to terminal is appropriate.
	Inspection result (Is the judging standard satisfied?)	YES	Go to step 7.
		NO	Modify connector.

Step 4	Inspection items		Inspection of switch connector
	Maintenance item		Inspection of connector
	Inspection condition		–
	Requirements		• Connector is properly connected. • No trace of water entry is found. • No corrosion is found in terminal. • Connection to terminal is appropriate.
	Inspection result (Is the judging standard satisfied?)	YES	Go to step 5.
		NO	Modify connector.

Step 5	Inspection items		Inspection of switch unit
	Maintenance item		Check continuity between connector (ET10A) terminal No. 2 and automatic transmission case.
	Inspection condition		• Disconnect connector, and measure switch side terminal. • Starter switch: OFF
	Requirements		There is no continuity.
	Inspection result (Is the judging standard satisfied?)	YES	Go to step 6.
		NO	Replacement of automatic transmission

<Step 5 inspection diagram>

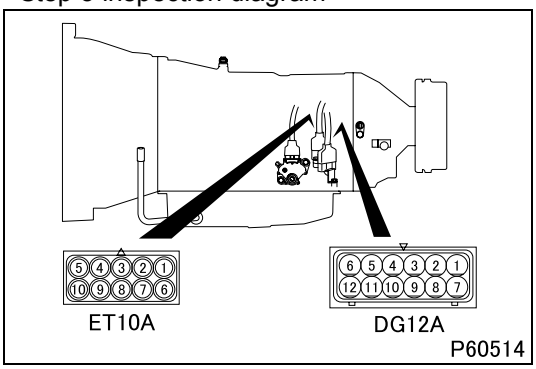

Step 6	Inspection items		Inspection of harness between switch and electronic control unit (signal)
	Maintenance item		Check circuit between connector (ET10A) terminal No. 2 and electronic control unit connector (CY17A) terminal No. 11.
	Inspection condition		Disconnect each device from harness and measure from connection side of harness connector.
	Requirements		There is continuity.
	Inspection result (Is the judging standard satisfied?)	YES	Go to step 7.
		NO	Modify harness.

Step 7	Inspection items		Inspection by control data
	Maintenance item		**<Multi-Use Tester not used>** Measure value of voltage between connector (CY17A) terminal No. 11 (+) and connector (CY24A) terminal No. 8 (–). **<Multi-Use Tester used>** Measure item No. 65 “Oil Press SW 5” of Service Data.
	Inspection condition		Engine in operation **<Multi-Use Tester not used>** Measure from back side of harness connector with electronic control unit connected to harness.
	Requirements		**<Multi-Use Tester not used>** • In 1st gear: 0 V • In 2nd, 3rd, 4th, 5th, 6th gears: 12 V **<Multi-Use Tester used>** • In 1st gear: ON • In 2nd, 3rd, 4th, 5th, 6th gears: OFF
	Inspection result (Is the judging standard satisfied?)	YES	Go to transient fault (See Gr00.).
		NO	• Check if a diagnosis code related to the shift solenoid 3 occurs. If it does, perform troubleshooting of the code. • Replacement of electronic control unit

[Fault code]
Diagnosis code: P0994/Flash code: 55
[Monitor ID]
66
[Fault (outline)]
Failure of oil pressure switch 6
[Diagnosis check]
- Oil pressure switch 6 is monitored for fault when the shift solenoid 3 is energized (high pressure).

[Code generation condition]
- Oil pressure switch 6 remains OFF (low pressure) for 0.1 second.

[Diagnosis check timing]
- Fault diagnosis is performed each time when the control is activated.

[Diagnostic requirement]
- Shift solenoid 3 is ON

[Control effected by electronic control unit during fault]
- Lockup control is turned OFF
- Control is effected on fixed speed gear output (2nd).

[Probable cause of trouble]
- Open-circuit or short-circuit of harness between electronic control unit and oil pressure switch 6 or shift solenoid 3
- Malfunction of each connector
- Malfunction of oil pressure switch 6 or shift solenoid 3
- Malfunction of electronic control unit

[Recoverability]
- Recovered if signal becomes normal when starter switch is turned OFF to ON (power supply resumed to electronic control unit).

[Electronic Control Unit Connection Diagram]

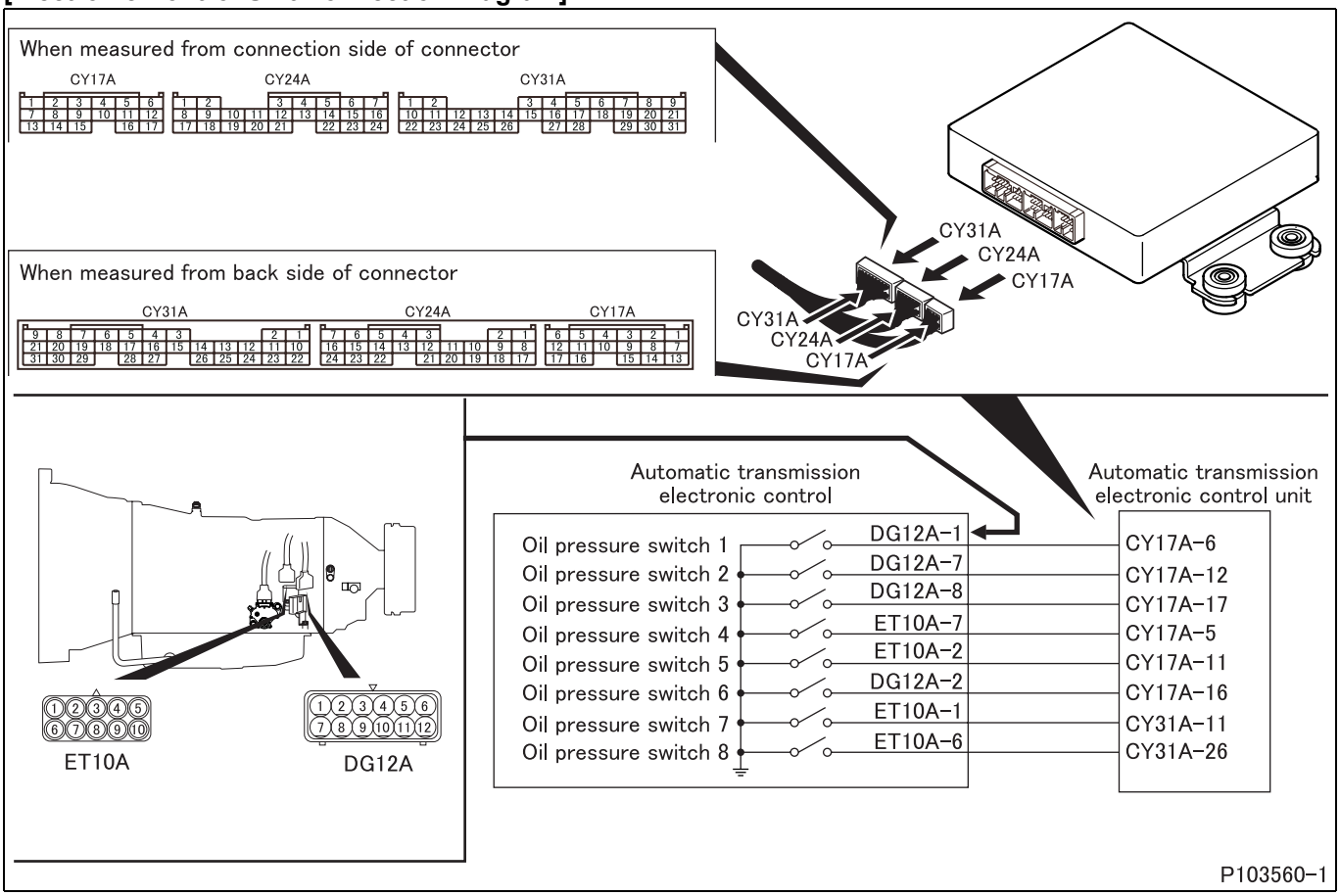

P103560-1

[Parts Identification and Location]

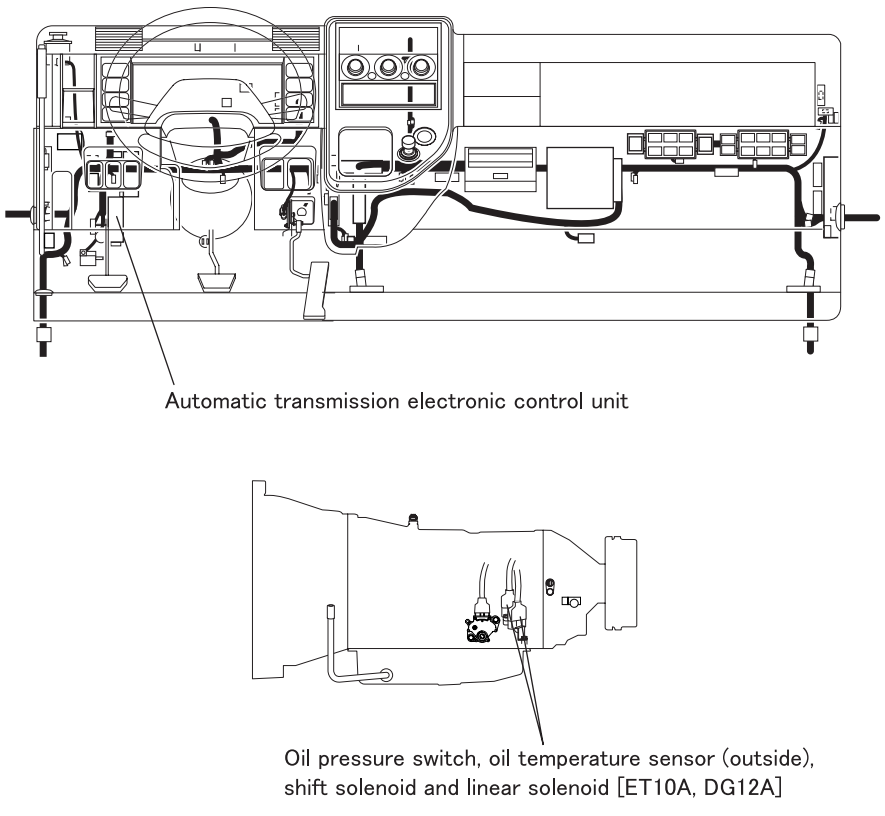

P103560-2

[Fault diagnosis]

- Perform checks in the sequence of the following steps.

Step 1	Inspection items		Inspection by control data
	Maintenance item		**<Multi-Use Tester not used>** Measure value of voltage between connector (CY17A) terminal No. 16 (+) and connector (CY24A) terminal No. 8 (–). **<Multi-Use Tester used>** Measure item No. 66 “Oil Press SW 6” of Service Data.
	Inspection condition		Engine in operation **<Multi-Use Tester not used>** Measure from back side of harness connector with electronic control unit connected to harness.
	Requirements		**<Multi-Use Tester not used>** • In 1st gear: 0 V • In 2nd, 3rd, 4th, 5th, 6th gears: 12 V **<Multi-Use Tester used>** • In 1st gear: ON • In 2nd, 3rd, 4th, 5th, 6th gears: OFF
	Inspection result (Is the judging standard satisfied?)	YES	Go to transient fault (See Gr00.).
		NO	Go to step 2.

Step 2	Inspection items		Inspection by electronic control unit connector (signal)
	Maintenance item		Measure continuity between connector (CY17A) terminal No. 16 and chassis ground.
	Inspection condition		• Disconnect electronic control unit and harness, and measure from connection side of harness connector. • Starter switch: OFF
	Requirements		There is no continuity.
	Inspection result (Is the judging standard satisfied?)	YES	Go to step 3.
		NO	Go to step 4.

Step 3	Inspection items		Inspection of electronic control unit connector
	Maintenance item		Inspection of connector
	Inspection condition		–
	Requirements		• Connector is properly connected. • No trace of water entry is found. • No corrosion is found in terminal. • Connection to terminal is appropriate.
	Inspection result (Is the judging standard satisfied?)	YES	Go to step 7.
		NO	Modify connector.

Step 4	Inspection items		Inspection of switch connector
	Maintenance item		Inspection of connector
	Inspection condition		–
	Requirements		• Connector is properly connected. • No trace of water entry is found. • No corrosion is found in terminal. • Connection to terminal is appropriate.
	Inspection result (Is the judging standard satisfied?)	YES	Go to step 5.
		NO	Modify connector.

Step 5	Inspection items		Inspection of switch unit
	Maintenance item		Check continuity between connector (DG12A) terminal No. 2 and automatic transmission case.
	Inspection condition		• Disconnect connector, and measure switch side terminal. • Starter switch: OFF
	Requirements		There is no continuity.
	Inspection result (Is the judging standard satisfied?)	YES	Go to step 6.
		NO	Replacement of automatic transmission

<Step 5 inspection diagram>

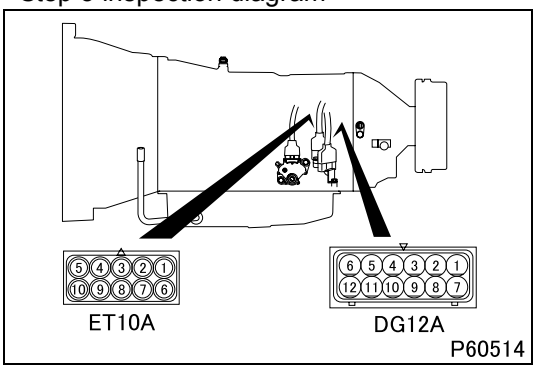

Step 6	Inspection items		Inspection of harness between switch and electronic control unit (signal)
	Maintenance item		Check circuit between connector (DG12A) terminal No. 2 and electronic control unit connector (CY17A) terminal No. 16.
	Inspection condition		Disconnect each device from harness and measure from connection side of harness connector.
	Requirements		There is continuity.
	Inspection result (Is the judging standard satisfied?)	YES	Go to step 7.
		NO	Modify harness.

Step 7	Inspection items		Inspection by control data
	Maintenance item		**<Multi-Use Tester not used>** Measure value of voltage between connector (CY17A) terminal No. 16 (+) and connector (CY24A) terminal No. 8 (–). **<Multi-Use Tester used>** Measure item No. 66 “Oil Press SW 6” of Service Data.
	Inspection condition		Engine in operation **<Multi-Use Tester not used>** Measure from back side of harness connector with electronic control unit connected to harness.
	Requirements		**<Multi-Use Tester not used>** • In 1st gear: 0 V • In 2nd, 3rd, 4th, 5th, 6th gears: 12 V **<Multi-Use Tester used>** • In 1st gear: ON • In 2nd, 3rd, 4th, 5th, 6th gears: OFF
	Inspection result (Is the judging standard satisfied?)	YES	Go to transient fault (See Gr00.).
		NO	• Check if a diagnosis code related to the shift solenoid 3 occurs. If it does, perform troubleshooting of the code. • Replacement of electronic control unit

[Fault code]
Diagnosis code: P0995/Flash code: 55
[Monitor ID]
65
[Fault (outline)]
Failure of oil pressure switch 6
[Diagnosis check]
- Oil pressure switch 6 is monitored for fault when the shift solenoid 3 is deenergized (low pressure).

[Code generation condition]
- Oil pressure switch 6 remains ON (high pressure) for 0.1 second.

[Diagnosis check timing]
- Fault diagnosis is performed each time when the control is activated.

[Diagnostic requirement]
- Shift solenoid 3 is OFF

[Control effected by electronic control unit during fault]
- Lockup control is turned OFF
- Control is effected on fixed speed gear output (2nd).

[Probable cause of trouble]
- Open-circuit or short-circuit of harness between electronic control unit and oil pressure switch 6 or shift solenoid 3
- Malfunction of each connector
- Malfunction of oil pressure switch 6 or shift solenoid 3
- Malfunction of electronic control unit

[Recoverability]
- Recovered if signal becomes normal when starter switch is turned OFF to ON (power supply resumed to electronic control unit).

[Electronic Control Unit Connection Diagram]

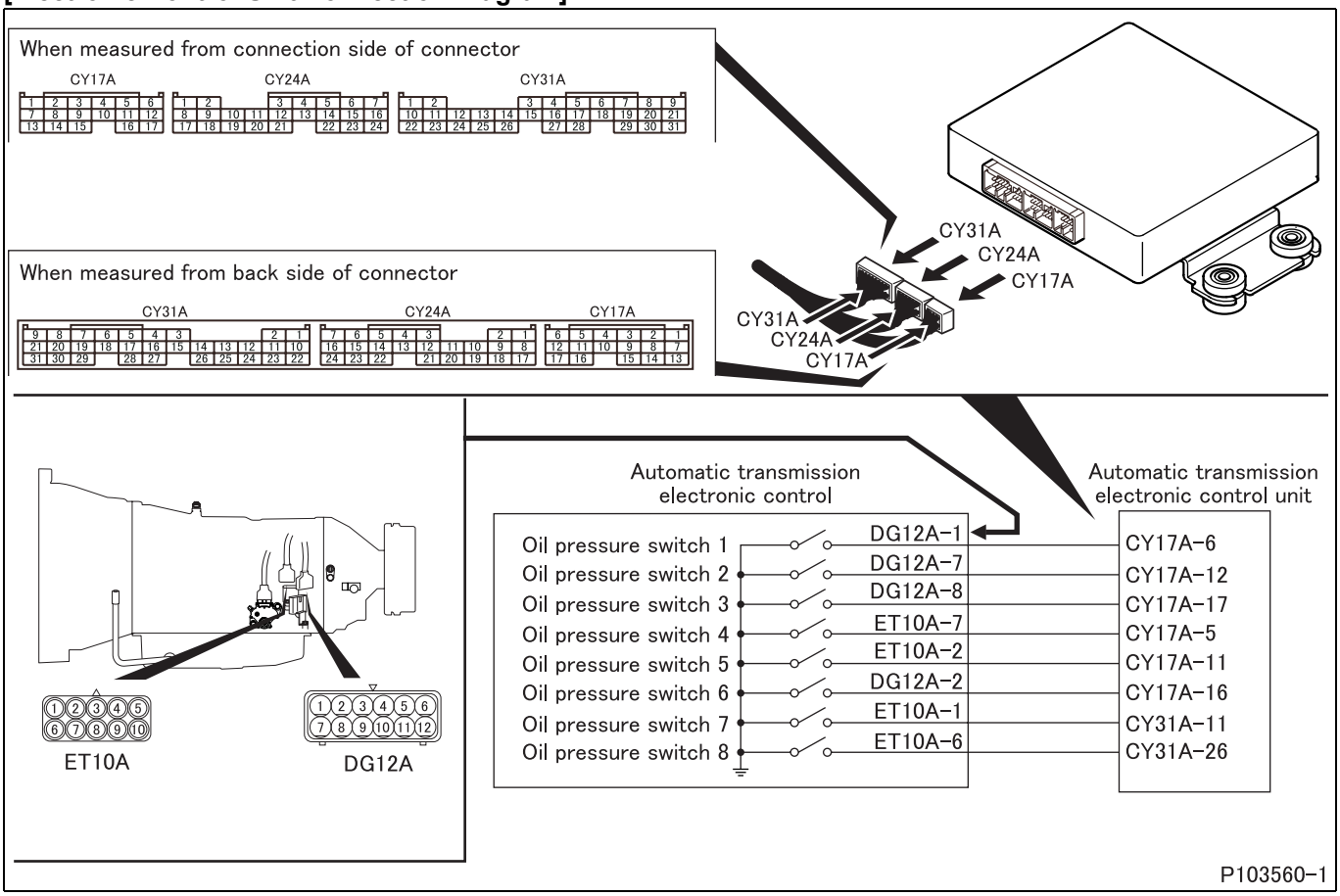

P103560-1

[Parts Identification and Location]

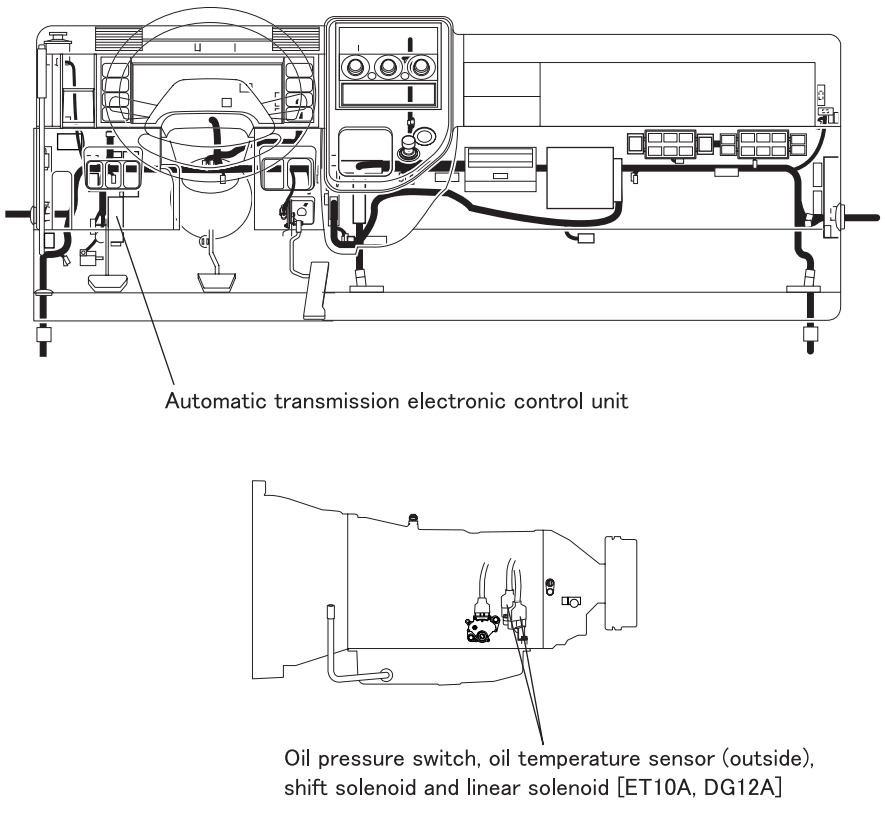

P103560-2

[Fault diagnosis]

- Perform checks in the sequence of the following steps.

Step 1	Inspection items		Inspection by control data
	Maintenance item		**<Multi-Use Tester not used>** Measure value of voltage between connector (CY17A) terminal No. 16 (+) and connector (CY24A) terminal No. 8 (–). **<Multi-Use Tester used>** Measure item No. 66 “Oil Press SW 6” of Service Data.
	Inspection condition		Engine in operation **<Multi-Use Tester not used>** Measure from back side of harness connector with electronic control unit connected to harness.
	Requirements		**<Multi-Use Tester not used>** • In 1st gear: 0 V • In 2nd, 3rd, 4th, 5th, 6th gears: 12 V **<Multi-Use Tester used>** • In 1st gear: ON • In 2nd, 3rd, 4th, 5th, 6th gears: OFF
	Inspection result (Is the judging standard satisfied?)	YES	Go to transient fault (See Gr00.).
		NO	Go to step 2.

Step 2	Inspection items		Inspection by electronic control unit connector (signal)
	Maintenance item		Measure continuity between connector (CY17A) terminal No. 16 and chassis ground.
	Inspection condition		• Disconnect electronic control unit and harness, and measure from connection side of harness connector. • Starter switch: OFF
	Requirements		There is no continuity.
	Inspection result (Is the judging standard satisfied?)	YES	Go to step 3.
		NO	Go to step 4.

Step 3	Inspection items		Inspection of electronic control unit connector
	Maintenance item		Inspection of connector
	Inspection condition		–
	Requirements		• Connector is properly connected. • No trace of water entry is found. • No corrosion is found in terminal. • Connection to terminal is appropriate.
	Inspection result (Is the judging standard satisfied?)	YES	Go to step 7.
		NO	Modify connector.

Step 4	Inspection items		Inspection of switch connector
	Maintenance item		Inspection of connector
	Inspection condition		–
	Requirements		• Connector is properly connected. • No trace of water entry is found. • No corrosion is found in terminal. • Connection to terminal is appropriate.
	Inspection result (Is the judging standard satisfied?)	YES	Go to step 5.
		NO	Modify connector.

Step 5	Inspection items		Inspection of switch unit
	Maintenance item		Check continuity between connector (DG12A) terminal No. 2 and automatic transmission case.
	Inspection condition		• Disconnect connector, and measure switch side terminal. • Starter switch: OFF
	Requirements		There is no continuity.
	Inspection result (Is the judging standard satisfied?)	YES	Go to step 6.
		NO	Replacement of automatic transmission

<Step 5 inspection diagram>

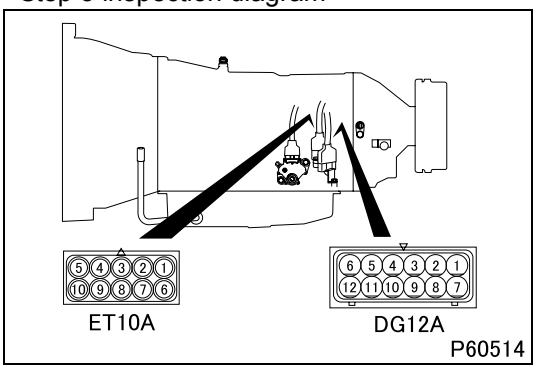

Step 6	Inspection items		Inspection of harness between switch and electronic control unit (signal)
	Maintenance item		Check circuit between connector (DG12A) terminal No. 2 and electronic control unit connector (CY17A) terminal No. 16.
	Inspection condition		Disconnect each device from harness and measure from connection side of harness connector.
	Requirements		There is continuity.
	Inspection result (Is the judging standard satisfied?)	YES	Go to step 7.
		NO	Modify harness.

Step 7	Inspection items		Inspection by control data
	Maintenance item		**<Multi-Use Tester not used>** Measure value of voltage between connector (CY17A) terminal No. 16 (+) and connector (CY24A) terminal No. 8 (–). **<Multi-Use Tester used>** Measure item No. 66 “Oil Press SW 6” of Service Data.
	Inspection condition		Engine in operation **<Multi-Use Tester not used>** Measure from back side of harness connector with electronic control unit connected to harness.
	Requirements		**<Multi-Use Tester not used>** • In 1st gear: 0 V • In 2nd, 3rd, 4th, 5th, 6th gears: 12 V **<Multi-Use Tester used>** • In 1st gear: ON • In 2nd, 3rd, 4th, 5th, 6th gears: OFF
	Inspection result (Is the judging standard satisfied?)	YES	Go to transient fault (See Gr00.).
		NO	• Check if a diagnosis code related to the shift solenoid 3 occurs. If it does, perform troubleshooting of the code. • Replacement of electronic control unit

[Fault code]
Diagnosis code: P1604/Flash code: 24
[Monitor ID]
10
[Fault (outline)]
Abnormality in accelerator pedal position signal
[Diagnosis check]
- Accelerator pedal position signal from engine electronic control unit is monitored for abnormality.

[Code generation condition]
- Signal outputted from engine electronic control unit remains abnormal for 5 seconds. (This condition is not caused by abnormal accelerator opening but by abnormal signal.)

[Diagnosis check timing]
- Fault diagnosis is continuously performed.

[Diagnostic requirement]
- Starter switch: ON

[Control effected by electronic control unit during fault]
- Oil pressure control is executed on the basis of the preset value for accelerator pedal position of 100%
- Shift point control is executed on the basis of the preset value for the accelerator pedal position of 0%
- Braking force control is inhibited.

[Probable cause of trouble]
- Open-circuit or short-circuit between electronic control unit and engine electronic control unit or between engine electronic control unit and accelerator pedal position sensor
- Malfunction of each connector
- Malfunction of accelerator pedal position sensor
- Malfunction of electronic control unit
- Malfunction of engine electronic control unit

[Recoverability]
- Recovered if signal becomes normal with starter switch in ON position.

[Electronic Control Unit Connection Diagram]

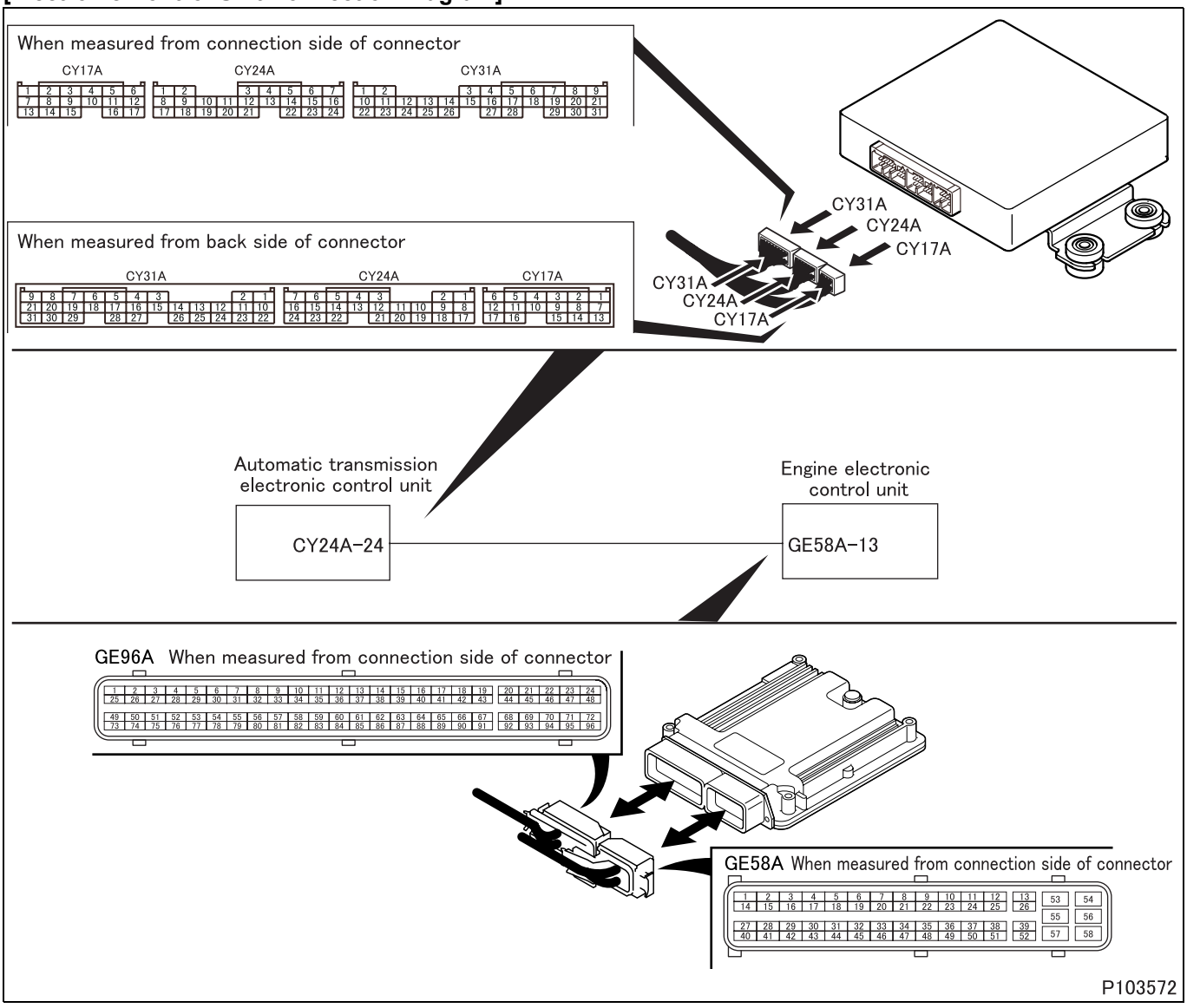

[Parts Identification and Location]

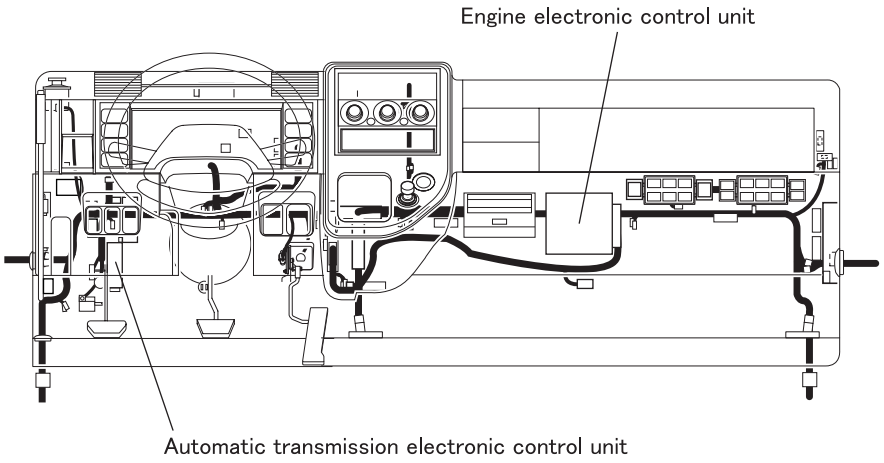

P103565-2

[Fault diagnosis]

- Perform checks in the sequence of the following steps.

Step 1	Inspection items		Inspection by control data
	Maintenance item		**<Multi-Use Tester not used>** Go to step 2. **<Multi-Use Tester used>** Measure item No. 58 “Accel Percent” of Service Data.
	Inspection condition		–
	Requirements		• Accelerator pedal released (fully closed): 0% • Accelerator pedal pressed (fully opened): 100%
	Inspection result (Is the judging standard satisfied?)	YES	Go to transient fault (See Gr00.).
		NO	Go to step 2.

Step 2	Inspection items		Inspection of electronic control unit connector
	Maintenance item		Inspection of connector
	Inspection condition		–
	Requirements		• Connector is properly connected. • No trace of water entry is found. • No corrosion is found in terminal. • Connection to terminal is appropriate.
	Inspection result (Is the judging standard satisfied?)	YES	Go to step 3.
		NO	Modify connector.

Step 3	Inspection items		Inspection of engine electronic control unit connector
	Maintenance item		Inspection of connector
	Inspection condition		–
	Requirements		• Connector is properly connected. • No trace of water entry is found. • No corrosion is found in terminal. • Connection to terminal is appropriate.
	Inspection result (Is the judging standard satisfied?)	YES	Go to step 4.
		NO	Modify connector.

Step 4	Inspection items		Inspection of engine electronic control unit
	Maintenance item		Inspection of engine electronic control unit
	Inspection condition		–
	Requirements		Free of errors related to accelerator opening
	Inspection result (Is the judging standard satisfied?)	YES	Go to step 5.
		NO	Perform troubleshooting on engine electronic control unit (See Gr13EA).

Step 5	Inspection items		Inspection of harness between electronic control unit and engine electronic control unit
	Maintenance item		Check circuit between connector (CY24A) terminal No. 24 and engine electronic control unit connector (GE58A) terminal No. 13.
	Inspection condition		Disconnect each electronic control unit from harness and measure from connection side of harness connector.
	Requirements		There is continuity.
	Inspection result (Is the judging standard satisfied?)	YES	Go to step 6.
		NO	Modify harness.

Step 6	Inspection items		Inspection by control data
	Maintenance item		**<Multi-Use Tester not used>** Check for recurrence of the same diagnosis code. **<Multi-Use Tester used>** Measure item No. 58 “Accel Percent” of Service Data.
	Inspection condition		–
	Requirements		**<Multi-Use Tester not used>** If the same diagnosis code occurs, replace electronic control unit. **<Multi-Use Tester used>** • Accelerator pedal released (fully closed): 0% • Accelerator pedal pressed (fully opened): 100%
	Inspection result (Is the judging standard satisfied?)	YES	Go to transient fault (See Gr00.).
		NO	Replacement of electronic control unit (If replacement of electronic control unit does not eliminate trouble, replace engine electronic control unit.)

[Fault code]
Diagnosis code: P2716/Flash code: 34
[Monitor ID]
27, 28
[Fault (outline)]
PL linear solenoid is open-circuited or short-circuited.
[Diagnosis check]
- Resistance and current in the PL linear solenoid are monitored for fault.

[Code generation condition]
- Resistance in the PL linear solenoid remains at or above the specified value (100 kΩ) for 0.065 second (open-circuit or short-circuit in power supply side).
- Current in the PL linear solenoid remains at or above the specified value (4A) for 0.065 second (short-circuit in ground side).

[Diagnosis check timing]
- Fault diagnosis is continuously performed.

[Diagnostic requirement]
- Continuous

[Control effected by electronic control unit during fault]
- PL linear solenoid is turned OFF (line pressure held in high pressure side).

[Probable cause of trouble]
- Open-circuit or short-circuit of harness between electronic control unit and PL linear solenoid
- Malfunction of each connector
- Malfunction of PL linear solenoid
- Malfunction of electronic control unit

[Recoverability]
- Recovered if signal becomes normal when starter switch is turned OFF to ON (power supply resumed to electronic control unit).

[Electronic Control Unit Connection Diagram]

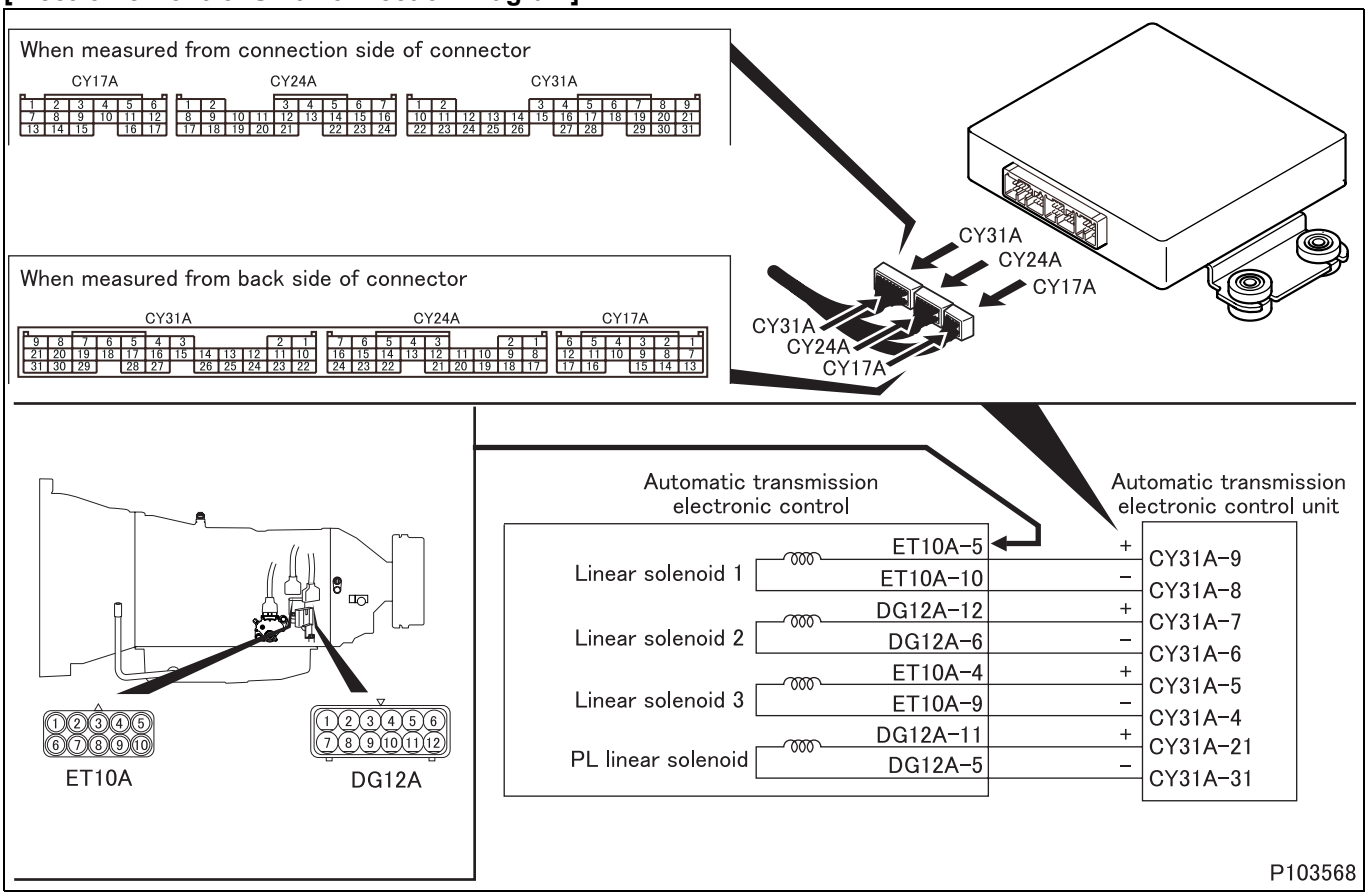

P103568

[Parts Identification and Location]

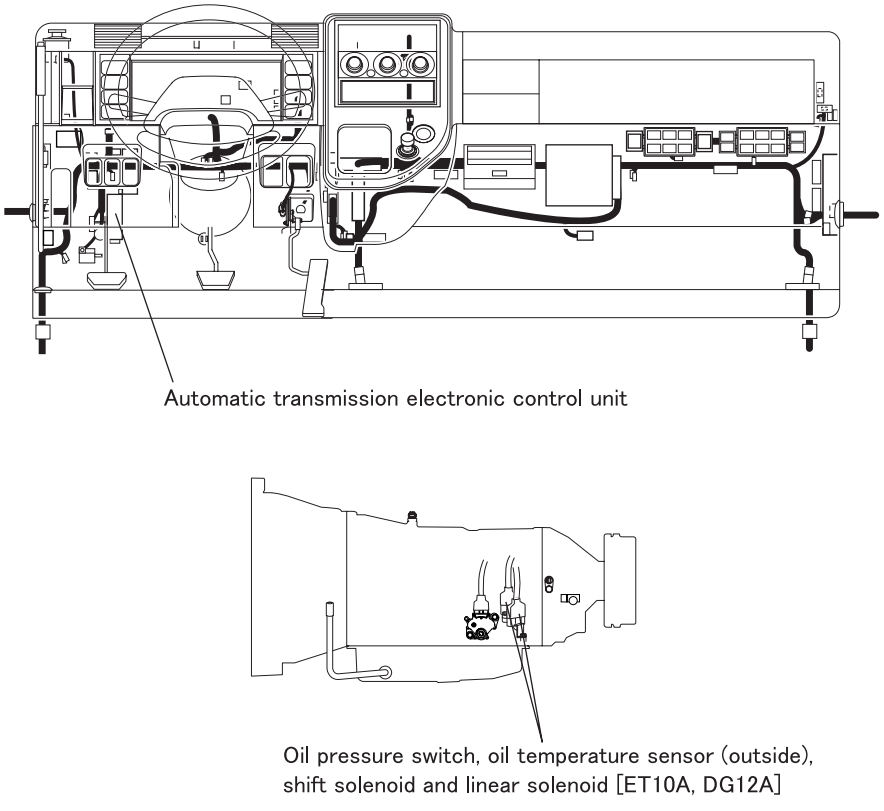

P103560-2

[Fault diagnosis]

- Perform checks in the sequence of the following steps.

Step 1	Inspection items		Inspection by control data
	Maintenance item		**<Multi-Use Tester not used>** Go to step 2. **<Multi-Use Tester used>** Measure item No. 34 “Linear Sol Press 4” of Service Data.
	Inspection condition		• Engine in operation • With the brake pedal pressed down, shift the range selector lever.
	Requirements		• In R range, 1st gear (high accelerator pedal position): 260 lbf/in^2 • In any gears except above: 100 lbf/in^2
	Inspection result (Is the judging standard satisfied?)	YES	Go to transient fault (See Gr00.).
		NO	Go to step 2.

Step 2	Inspection items		Inspection by electronic control unit connector (signal)
	Maintenance item		Measure value of resistance between connector (CY31A) terminals No. 21 and 31.
	Inspection condition		• Disconnect electronic control unit and harness, and measure from connection side of harness connector. • Starter switch: OFF
	Requirements		5.5 ± 0.5 Ω
	Inspection result (Is the judging standard satisfied?)	YES	Go to step 3.
		NO	Go to step 4.

Step 3	Inspection items		Inspection of electronic control unit connector
	Maintenance item		Inspection of connector
	Inspection condition		–
	Requirements		• Connector is properly connected. • No trace of water entry is found. • No corrosion is found in terminal. • Connection to terminal is appropriate.
	Inspection result (Is the judging standard satisfied?)	YES	Go to step 8.
		NO	Modify connector.

Step 4	Inspection items		Inspection of solenoid connector
	Maintenance item		Inspection of connector
	Inspection condition		–
	Requirements		• Connector is properly connected. • No trace of water entry is found. • No corrosion is found in terminal. • Connection to terminal is appropriate.
	Inspection result (Is the judging standard satisfied?)	YES	Go to step 5.
		NO	Modify connector.

Step 5	Inspection items		Inspection of solenoid unit
	Maintenance item		Measure value of resistance between connector (DG12A) terminals No. 11 and 5.
	Inspection condition		• Disconnect connector, and measure solenoid side terminal. • Starter switch: OFF
	Requirements		5.5 ± 0.5 Ω
	Inspection result (Is the judging standard satisfied?)	YES	Go to step 6.
		NO	Replacement of automatic transmission

<Step 5 inspection diagram>

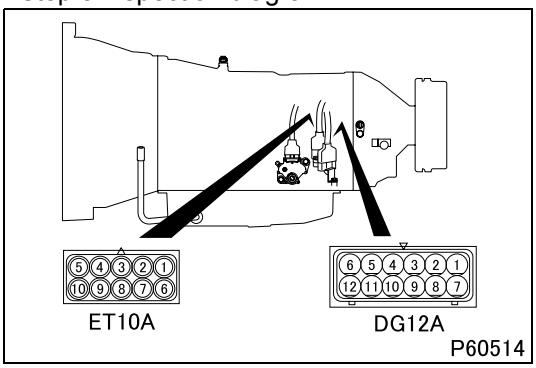

Step 6	Inspection items		Inspection of harness between solenoid and electronic control unit (power supply)
	Maintenance item		Check circuit between connector (DG12A) terminal No. 11 and electronic control unit connector (CY31A) terminal No. 21.
	Inspection condition		Disconnect each device from harness and measure from connection side of harness connector.
	Requirements		There is continuity.
	Inspection result (Is the judging standard satisfied?)	YES	Go to step 7.
		NO	Modify harness.

Step 7	Inspection items		Inspection of harness between solenoid and electronic control unit (ground)
	Maintenance item		Check circuit between connector (DG12A) terminal No. 5 and electronic control unit connector (CY31A) terminal No. 31.
	Inspection condition		Disconnect each device from harness and measure from connection side of harness connector.
	Requirements		There is continuity.
	Inspection result (Is the judging standard satisfied?)	YES	Go to step 8.
		NO	Modify harness.

Step 8	Inspection items		Inspection by control data
	Maintenance item		**<Multi-Use Tester not used>** Check for recurrence of the same diagnosis code. **<Multi-Use Tester used>** Measure item No. 34 “Linear Sol Press 4” of Service Data.
	Inspection condition		• Engine in operation • With the brake pedal pressed down, shift the range selector lever.
	Requirements		**<Multi-Use Tester not used>** If the same diagnosis code occurs, replace electronic control unit. **<Multi-Use Tester used>** • In R range, 1st gear (high accelerator pedal position): 260 lbf/in^2 • In any gears except above: 100 lbf/in^2
	Inspection result (Is the judging standard satisfied?)	YES	If the diagnosis code remains after actual run, replace the electronic control unit.
		NO	Replacement of electronic control unit

[Fault code]
Diagnosis code: P2742/Flash code: 17
[Monitor ID]
16
[Fault (outline)]
Failure of oil temperature sensor (outside)
[Diagnosis check]
- Automatic transmission fluid temperature is monitored by oil temperature sensor (outside).

[Code generation condition]
- Oil temperature sensor (outside) output temperature remains excessively high (over 180°C {355°F}) for 0.5 second.

[Diagnosis check timing]
- Fault diagnosis is continuously performed.

[Diagnostic requirement]
- Continuous

[Control effected by electronic control unit during fault]
- Control is effected with oil temperature at 80°C {175°F}.
- Braking force control is inhibited.

[Probable cause of trouble]
- Open-circuit or short-circuit of harness between electronic control unit and oil temperature sensor (outside)
- Malfunction of each connector
- Malfunction of oil temperature sensor (outside)
- Malfunction of electronic control unit

[Recoverability]
- Recovered if signal becomes normal with starter switch in ON position.

[Electronic Control Unit Connection Diagram]

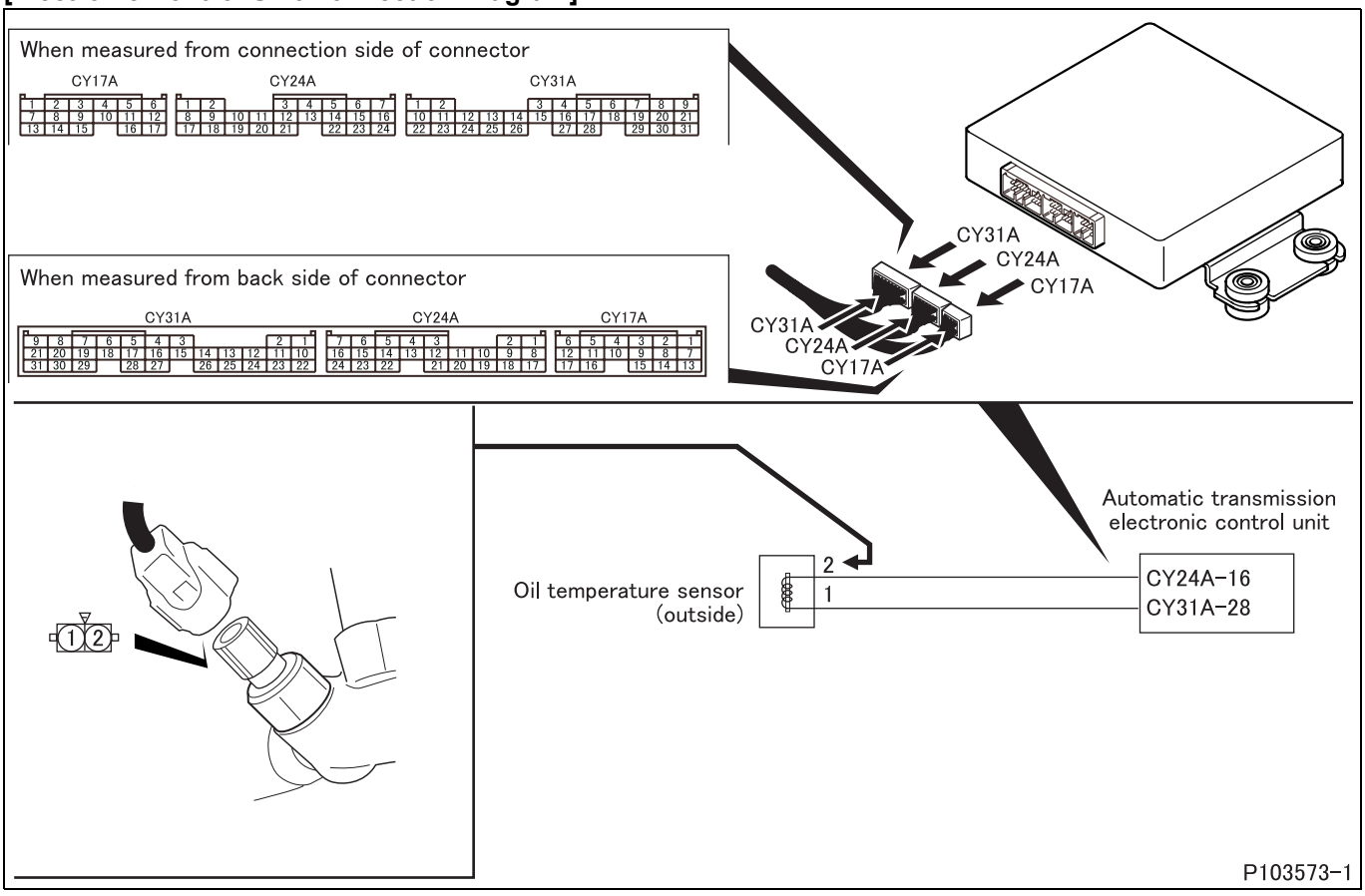

[Parts Identification and Location]

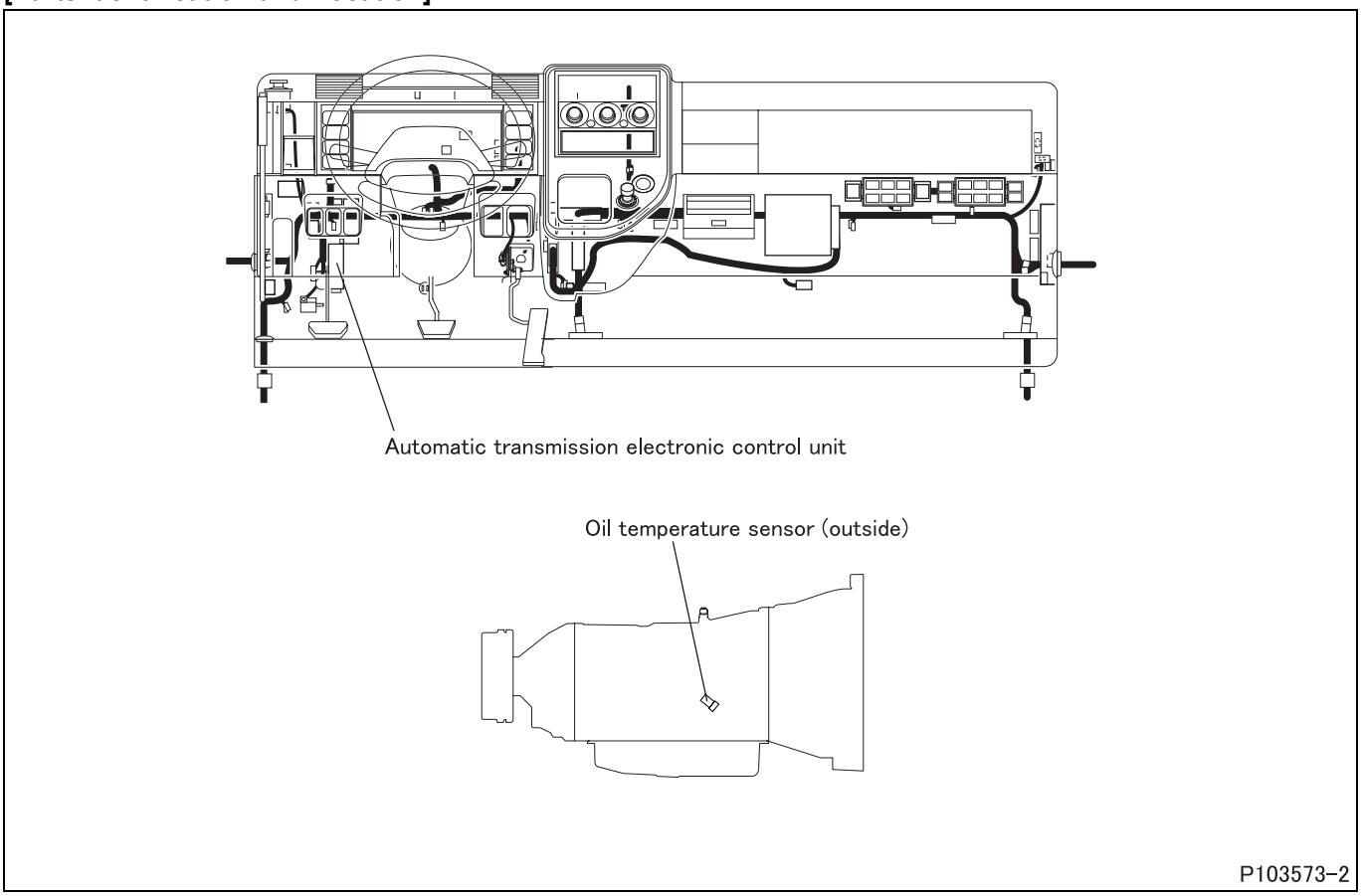

[Fault diagnosis]

- Perform checks in the sequence of the following steps.

Step 1	Inspection items		Inspection by control data
	Maintenance item		**<Multi-Use Tester not used>** Measure value of resistance between connector (CY24A) terminal No. 16 and connector (CY31A) terminal No. 28. **<Multi-Use Tester used>** Measure item No. 17 “A/T Oil Temp (TC)” of Service Data.
	Inspection condition		**<Multi-Use Tester not used>** Measure from back side of harness connector with electronic control unit connected to harness.
	Requirements		**<Multi-Use Tester not used>** Cold engine → during warm-up: Resistance is gradually reduced. **<Multi-Use Tester used>** • Cold engine: Proportionate to outside air temperature • During warm-up: Gradually increased.
	Inspection result (Is the judging standard satisfied?)	YES	Go to transient fault (See Gr00.).
		NO	Go to step 2.

Step 2	Inspection items		Inspection by electronic control unit connector (signal)
	Maintenance item		Measure value of resistance between connector (CY24A) terminal No. 16 and connector (CY31A) terminal No. 28.
	Inspection condition		• Disconnect electronic control unit and harness, and measure from connection side of harness connector. • Starter switch: OFF
	Requirements		• 115°C {240°F}: 655 to 730 Ω • 120°C {250°F}: 585 to 645 Ω • 145°C {295°F}: 340 to 375 Ω • 155°C {310°F}: 280 to 305 Ω
	Inspection result (Is the judging standard satisfied?)	YES	Go to step 3.
		NO	Go to step 4.

Step 3	Inspection items		Inspection of electronic control unit connector
	Maintenance item		Inspection of connector
	Inspection condition		–
	Requirements		• Connector is properly connected. • No trace of water entry is found. • No corrosion is found in terminal. • Connection to terminal is appropriate.
	Inspection result (Is the judging standard satisfied?)	YES	Replacement of electronic control unit
		NO	Modify connector.

Step 4	Inspection items		Inspection of sensor connector
	Maintenance item		Inspection of connector
	Inspection condition		–
	Requirements		• Connector is properly connected. • No trace of water entry is found. • No corrosion is found in terminal. • Connection to terminal is appropriate.
	Inspection result (Is the judging standard satisfied?)	YES	Go to step 5.
		NO	Modify connector.

Step 5	Inspection items		Inspection of sensor unit
	Maintenance item		Measure value of resistance between connector terminal No. 1 or 2 and body.
	Inspection condition		• Put sensor in vessel filled with automatic transmission fluid. • Measure value of resistance the sensor in each temperature (Wait for more than 5 minutes in each time to measure correct resistances).
	Requirements		• 115°C {240°F}: 655 to 730 Ω • 120°C {250°F}: 585 to 645 Ω • 145°C {295°F}: 340 to 375 Ω • 155°C {310°F}: 280 to 305 Ω
	Inspection result (Is the judging standard satisfied?)	YES	Go to step 6.
		NO	Replacement of sensor

<Step 5 inspection diagram>

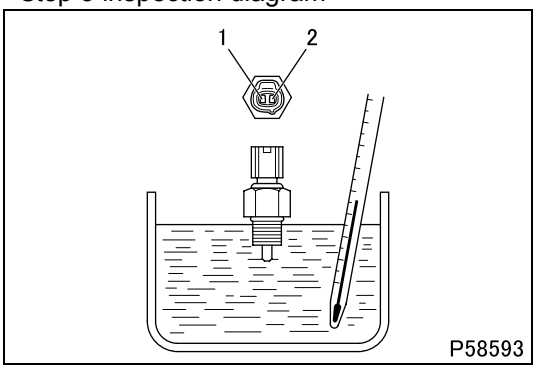

Step 6	Inspection items		Inspection of harness between sensor and electronic control unit (signal)
	Maintenance item		Check circuit between connector terminal No. 2 and electronic control unit connector (CY24A) terminal No. 16.
	Inspection condition		Disconnect each device from harness and measure from connection side of harness connector.
	Requirements		There is continuity.
	Inspection result (Is the judging standard satisfied?)	YES	Go to step 7.
		NO	Modify harness.

Step 7	Inspection items		Inspection of harness between sensor and electronic control unit (ground)
	Maintenance item		Check circuit between connector terminal No. 1 and electronic control unit connector (CY31A) terminal No. 28.
	Inspection condition		Disconnect each device from harness and measure from connection side of harness connector.
	Requirements		There is continuity.
	Inspection result (Is the judging standard satisfied?)	YES	Go to step 8.
		NO	Modify harness.

Step 8	Inspection items		Inspection by control data
	Maintenance item		**<Multi-Use Tester not used>** Measure value of resistance between connector (CY24A) terminal No. 16 and connector (CY31A) terminal No. 28. **<Multi-Use Tester used>** Measure item No. 17 “A/T Oil Temp (TC)” of Service Data.
	Inspection condition		**<Multi-Use Tester not used>** Measure from back side of harness connector with electronic control unit connected to harness.
	Requirements		**<Multi-Use Tester not used>** Cold engine → during warm-up: Resistance is gradually reduced. **<Multi-Use Tester used>** • Cold engine: Proportionate to outside air temperature • During warm-up: Gradually increased.
	Inspection result (Is the judging standard satisfied?)	YES	Go to transient fault (See Gr00.).
		NO	Replacement of electronic control unit

[Fault code]
Diagnosis code: P2743/Flash code: 17
[Monitor ID]
17, 18
[Fault (outline)]
Failure of oil temperature sensor (outside)
[Diagnosis check]
- Automatic transmission fluid temperature is monitored by oil temperature sensor (outside).

[Code generation condition]
Diagnosis code is generated under either of the following conditions.
- Oil temperature sensor (outside) output temperature remains excessively low (under –50°C {–56°F}) for 0.5 second. (Lamp indication: IMD) <A>
- Engine coolant temperature is above 70°C {160°F} and while oil temperature sensor (inside) output temperature is less than 60°C {140°F}, oil temperature sensor (outside) output temperature remains not less than 140°C {285°F} for 1 minute. (Lamp indication: 2DC) <B>

[Diagnosis check timing]
- Fault diagnosis is continuously performed.

[Diagnostic requirement]
- Continuous

[Control effected by electronic control unit during fault]
- Control is effected with oil temperature at 80°C {175°F}. <A>
- Braking force control is inhibited. <A>
- None <B>

[Probable cause of trouble]
- Open-circuit or short-circuit of harness between electronic control unit and oil temperature sensor (outside)
- Malfunction of each connector
- Malfunction of oil temperature sensor (outside)
- Malfunction of electronic control unit

[Recoverability]
- Recovered if signal becomes normal with starter switch in ON position. <A>

[Electronic Control Unit Connection Diagram]

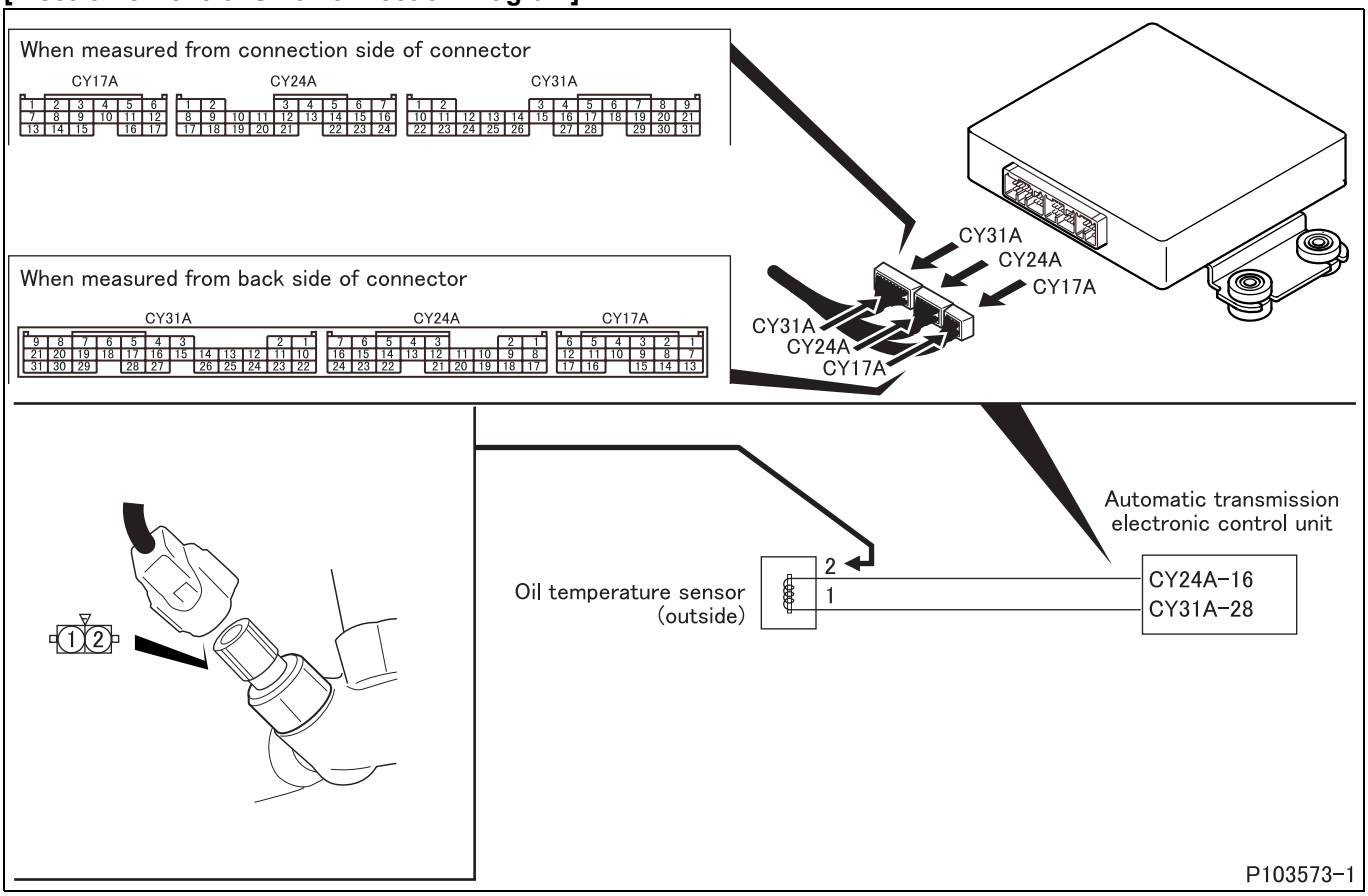

[Parts Identification and Location]

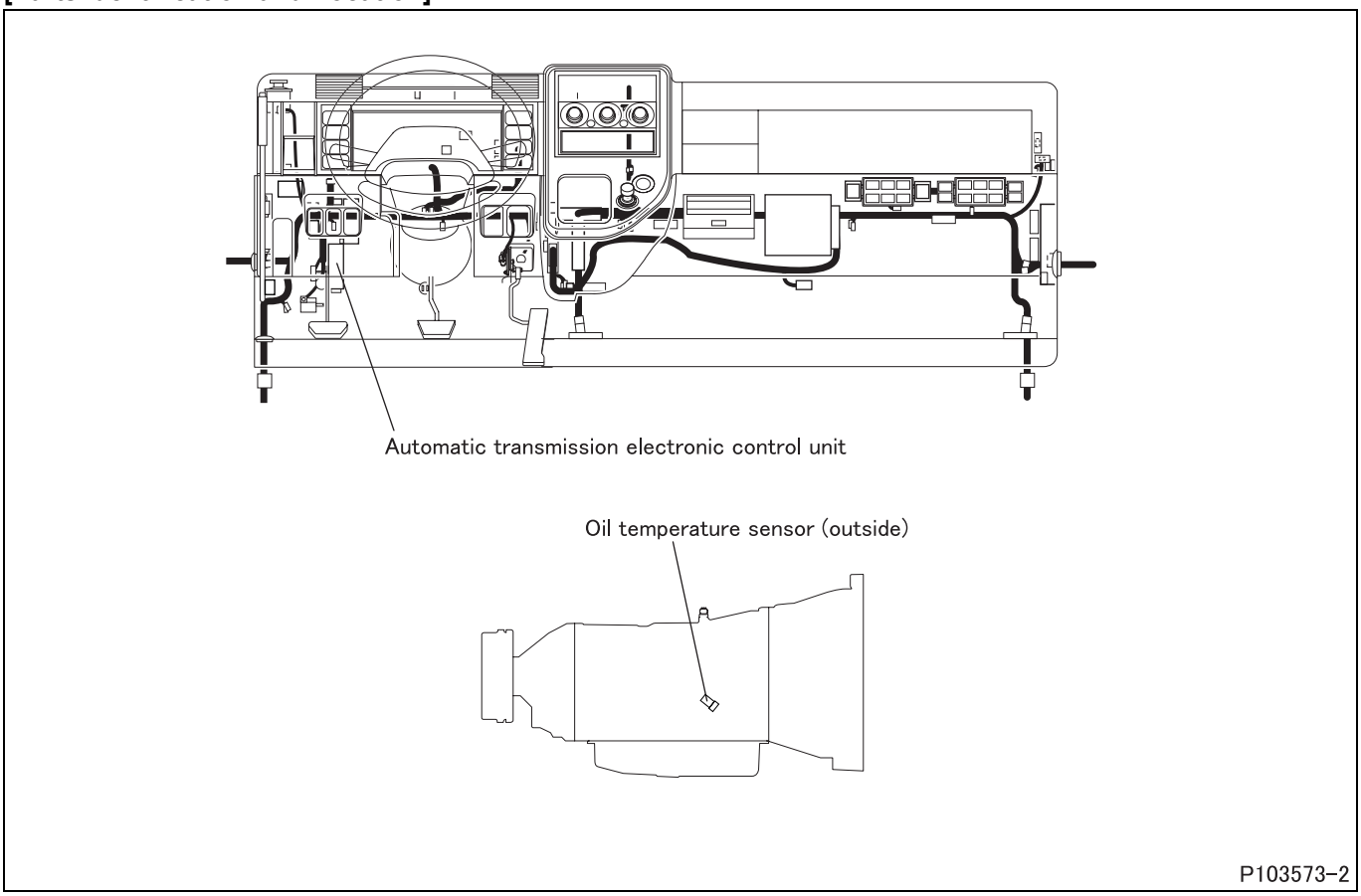

[Fault diagnosis]

- Perform checks in the sequence of the following steps.

Step 1	Inspection items		Inspection by control data
	Maintenance item		**<Multi-Use Tester not used>** Measure value of resistance between connector (CY24A) terminal No. 16 and connector (CY31A) terminal No. 28. **<Multi-Use Tester used>** Measure item No. 17 “A/T Oil Temp (TC)” of Service Data.
	Inspection condition		**<Multi-Use Tester not used>** Measure from back side of harness connector with electronic control unit connected to harness.
	Requirements		**<Multi-Use Tester not used>** Cold engine → during warm-up: Resistance is gradually reduced. **<Multi-Use Tester used>** • Cold engine: Proportionate to outside air temperature • During warm-up: Gradually increased.
	Inspection result (Is the judging standard satisfied?)	YES	Go to transient fault (See Gr00.).
		NO	Go to step 2.

Step 2	Inspection items		Inspection by electronic control unit connector (signal)
	Maintenance item		Measure value of resistance between connector (CY24A) terminal No. 16 and connector (CY31A) terminal No. 28.
	Inspection condition		• Disconnect electronic control unit and harness, and measure from connection side of harness connector. • Starter switch: OFF
	Requirements		• 115°C {240°F}: 655 to 730 Ω • 120°C {250°F}: 585 to 645 Ω • 145°C {295°F}: 340 to 375 Ω • 155°C {310°F}: 280 to 305 Ω
	Inspection result (Is the judging standard satisfied?)	YES	Go to step 3.
		NO	Go to step 4.

Step 3	Inspection items		Inspection of electronic control unit connector
	Maintenance item		Inspection of connector
	Inspection condition		–
	Requirements		• Connector is properly connected. • No trace of water entry is found. • No corrosion is found in terminal. • Connection to terminal is appropriate.
	Inspection result (Is the judging standard satisfied?)	YES	Replacement of electronic control unit
		NO	Modify connector.

Step 4	Inspection items		Inspection of sensor connector
	Maintenance item		Inspection of connector
	Inspection condition		–
	Requirements		• Connector is properly connected. • No trace of water entry is found. • No corrosion is found in terminal. • Connection to terminal is appropriate.
	Inspection result (Is the judging standard satisfied?)	YES	Go to step 5.
		NO	Modify connector.

Step 5	Inspection items		Inspection of sensor unit
	Maintenance item		Measure value of resistance between connector terminal No. 1 or 2 and body.
	Inspection condition		• Put sensor in vessel filled with automatic transmission fluid. • Measure value of resistance the sensor in each temperature (Wait for more than 5 minutes in each time to measure correct resistances).
	Requirements		• 115°C {240°F}: 655 to 730 Ω • 120°C {250°F}: 585 to 645 Ω • 145°C {295°F}: 340 to 375 Ω • 155°C {310°F}: 280 to 305 Ω
	Inspection result (Is the judging standard satisfied?)	YES	Go to step 6.
		NO	Replacement of sensor

<Step 5 inspection diagram>

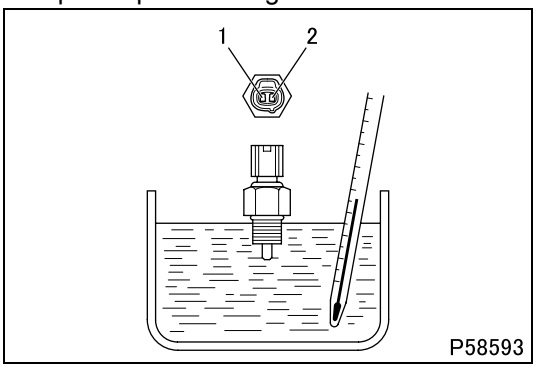

Step 6	Inspection items		Inspection of harness between sensor and electronic control unit (signal)
	Maintenance item		Check circuit between connector terminal No. 2 and electronic control unit connector (CY24A) terminal No. 16.
	Inspection condition		Disconnect each device from harness and measure from connection side of harness connector.
	Requirements		There is continuity.
	Inspection result (Is the judging standard satisfied?)	YES	Go to step 7.
		NO	Modify harness.

Step 7	Inspection items		Inspection of harness between sensor and electronic control unit (ground)
	Maintenance item		Check circuit between connector terminal No. 1 and electronic control unit connector (CY31A) terminal No. 28.
	Inspection condition		Disconnect each device from harness and measure from connection side of harness connector.
	Requirements		There is continuity.
	Inspection result (Is the judging standard satisfied?)	YES	Go to step 8.
		NO	Modify harness.

Step 8	Inspection items		Inspection by control data
	Maintenance item		**<Multi-Use Tester not used>** Measure value of resistance between connector (CY24A) terminal No. 16 and connector (CY31A) terminal No. 28. **<Multi-Use Tester used>** Measure item No. 17 “A/T Oil Temp (TC)” of Service Data.
	Inspection condition		**<Multi-Use Tester not used>** Measure from back side of harness connector with electronic control unit connected to harness.
	Requirements		**<Multi-Use Tester not used>** Cold engine → during warm-up: Resistance is gradually reduced. **<Multi-Use Tester used>** • Cold engine: Proportionate to outside air temperature • During warm-up: Gradually increased.
	Inspection result (Is the judging standard satisfied?)	YES	Go to transient fault (See Gr00.).
		NO	Replacement of electronic control unit

[Fault code]
Diagnosis code: P2757/Flash code: 61
[Monitor ID]
9
[Fault (outline)]
Failure of lockup clutch
[Diagnosis check]
- Engine speed is compared with turbine speed during lockup control.

[Code generation condition]
- Difference between engine speed and turbine speed is higher than specification (200 rpm).

[Diagnosis check timing]
- Fault diagnosis is performed each time when the control is activated.

[Diagnostic requirement]
- Lockup control: Lockup is in operation.
- Turbine speed sensor related diagnosis code does not occur.
- Engine speed sensor related diagnosis code does not occur.

[Control effected by electronic control unit during fault]
- Lockup control is turned OFF.

[Probable cause of trouble]
- Open-circuit or short-circuit of harness between electronic control unit and turbine speed sensor
- Malfunction of each connector
- Malfunction of turbine speed sensor
- Malfunction of electronic control unit
- Malfunction of automatic transmission

[Recoverability]
- Recovered if signal becomes normal when starter switch is turned OFF to ON (power supply resumed to electronic control unit).

[Fault diagnosis]
- Perform checks in the sequence of the following steps.

Step 1	Inspection items		Inspection by control data
	Maintenance item		**<Multi-Use Tester not used>** Replacement of automatic transmission **<Multi-Use Tester used>** Measure item No. 15 “Engine Speed” and No. 16 “Turbine Speed” of Service Data.
	Inspection condition		• P0717 “Turbine Speed Sensor No Signal” and P0726 “Engine Speed Sensor Performance” diagnosis codes do not occur. • Item No. 13 “A/T Oil Temp (OP)” indicates 25°C {77°F} or higher. • Item No. 67 “Oil Press SW7”: ON (vehicle runs at the lockup speed) • Lockup speed (2nd gear, accelerator pedal fully pressed down): 22 to 24 km/h {13.7 to 14.9 mph} • Item No. 15 “Engine Speed” is compared with No. 16 “Turbine Speed” during lockup operation.
	Requirements		Both speeds are matched.
	Inspection result (Is the judging standard satisfied?)	YES	Go to transient fault (See Gr00.).
		NO	Replacement of automatic transmission

[Fault code]
Diagnosis code: P2759/Flash code: 35
[Monitor ID]
25, 26
[Fault (outline)]
Linear solenoid 3 is open-circuited or short-circuited.
[Diagnosis check]
- Resistance and current in the linear solenoid 3 are monitored for fault.

[Code generation condition]
- Resistance in the linear solenoid 3 remains at or above the specified value (100 kΩ) for 0.065 second (open-circuit or short-circuit in power supply side).
- Current in the linear solenoid 3 remains at or above the specified value (4A) for 0.065 second (short-circuit in ground side).

[Diagnosis check timing]
- Fault diagnosis is continuously performed.

[Diagnostic requirement]
- Continuous

[Control effected by electronic control unit during fault]
- Lockup control is turned OFF
- Control is effected on fixed speed gear output (3rd for open-circuit, 2nd for short-circuit).

[Probable cause of trouble]
- Open-circuit or short-circuit of harness between electronic control unit and linear solenoid 3
- Malfunction of each connector
- Malfunction of linear solenoid 3
- Malfunction of electronic control unit

[Recoverability]
- Recovered if signal becomes normal when starter switch is turned OFF to ON (power supply resumed to electronic control unit).

[Electronic Control Unit Connection Diagram]

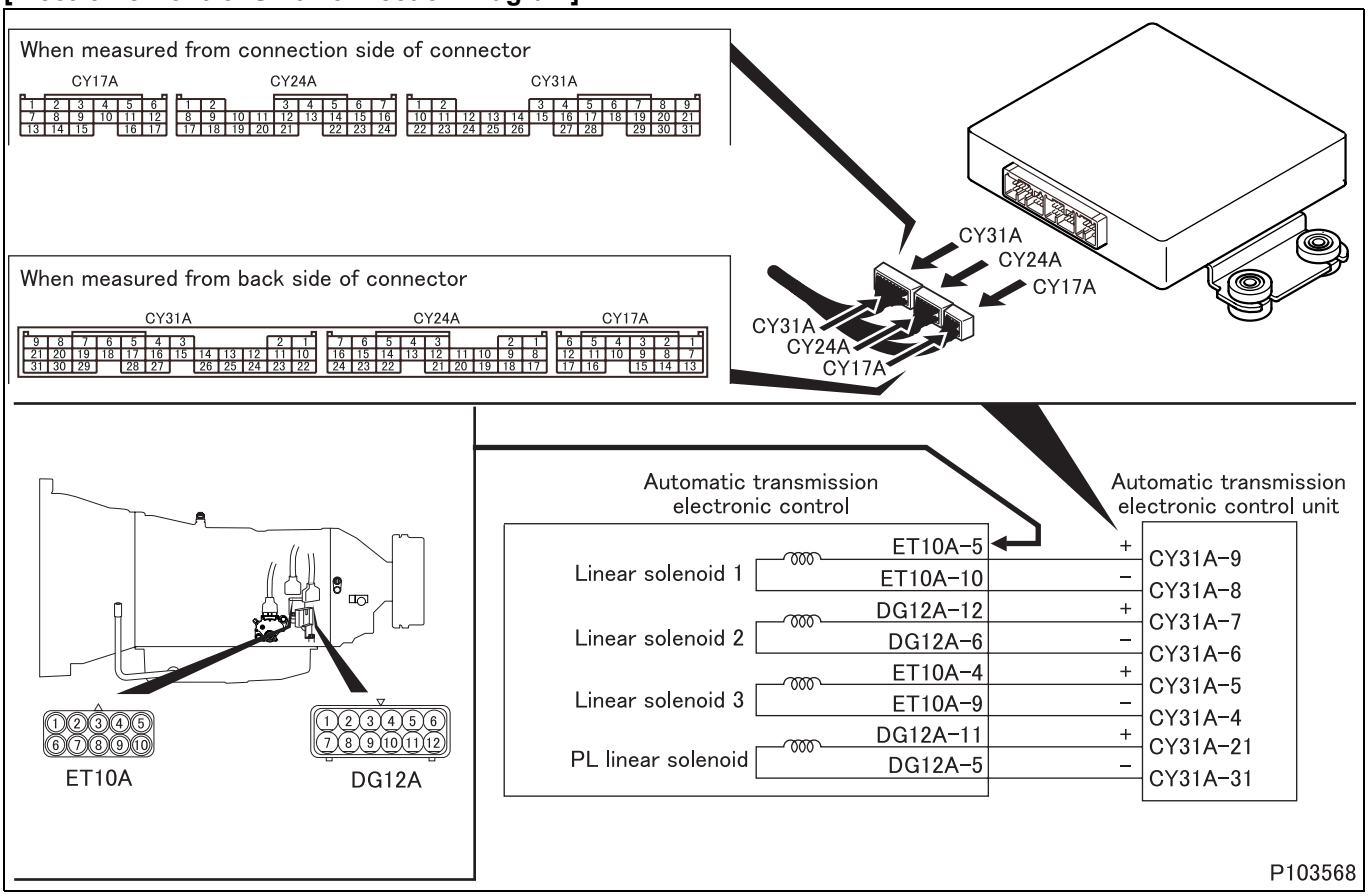

[Parts Identification and Location]

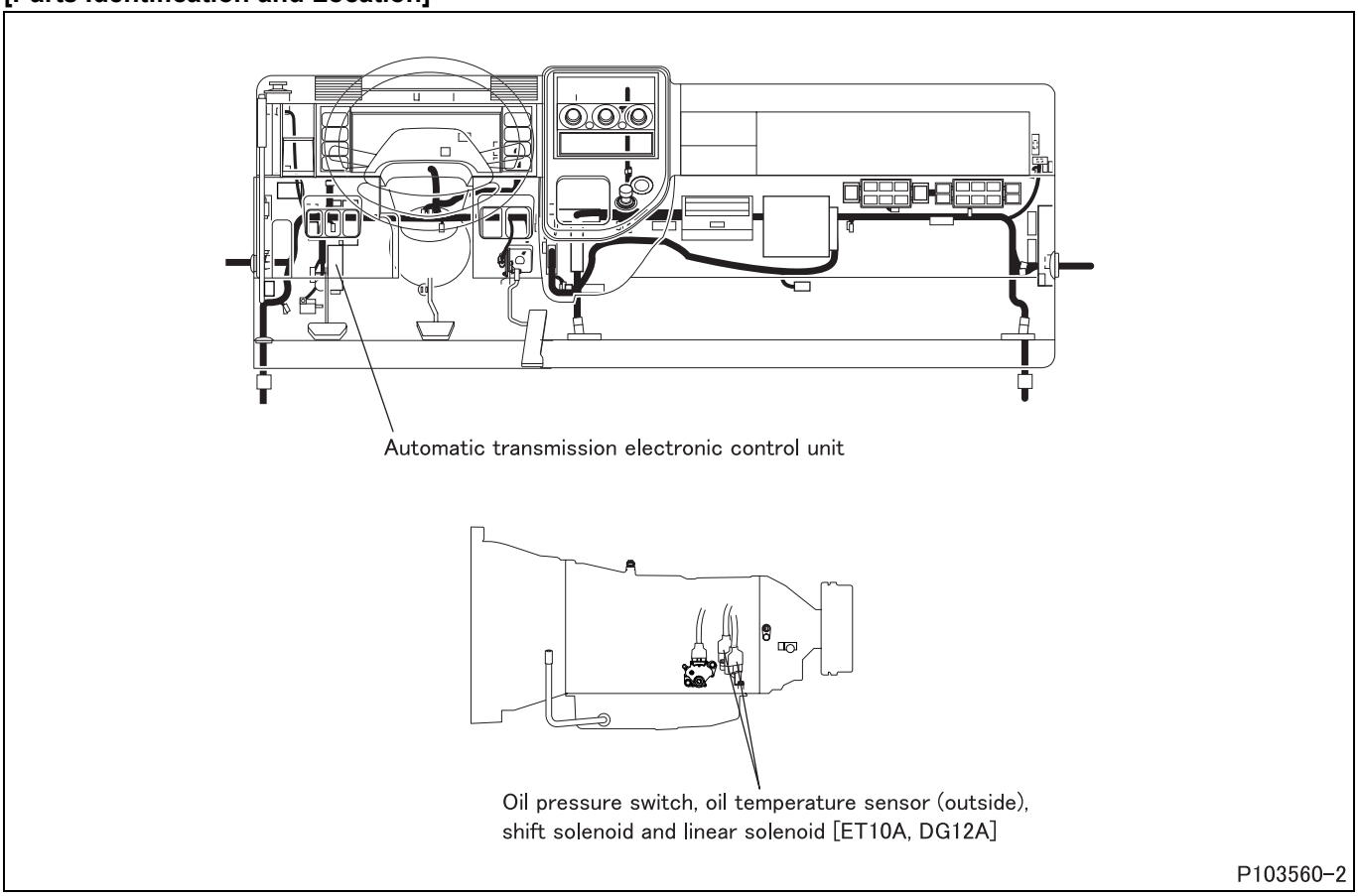

[Fault diagnosis]

- Perform checks in the sequence of the following steps.

Step 1	Inspection items		Inspection by control data
	Maintenance item		**<Multi-Use Tester not used>** Go to step 2. **<Multi-Use Tester used>** Measure item No. 35 “Linear Sol Press 3” of Service Data.
	Inspection condition		Engine in operation <When shifting from N to D> With the brake pedal pressed down, shift the range selector lever (from N to D). <In lock-up state> • Item No. 13 “A/T Oil Temp (OP)” indicates 25°C {77°F} or higher. • Lock-up speed (6th gear, accelerator pedal fully pressed down): 73 to 75 km/h {45.4 to 46.6 mph}
	Requirements		• When shifting from N to D: Varies • In lock-up state: 100 lbf/in^2
	Inspection result (Is the judging standard satisfied?)	YES	Go to transient fault (See Gr00.).
		NO	Go to step 2.

Step 2	Inspection items		Inspection by electronic control unit connector (signal)
	Maintenance item		Measure value of resistance between connector (CY31A) terminals No. 5 and 4.
	Inspection condition		• Disconnect electronic control unit and harness, and measure from connection side of harness connector. • Starter switch: OFF
	Requirements		5.5 ± 0.5 Ω
	Inspection result (Is the judging standard satisfied?)	YES	Go to step 3.
		NO	Go to step 4.

Step 3	Inspection items		Inspection of electronic control unit connector
	Maintenance item		Inspection of connector
	Inspection condition		–
	Requirements		• Connector is properly connected. • No trace of water entry is found. • No corrosion is found in terminal. • Connection to terminal is appropriate.
	Inspection result (Is the judging standard satisfied?)	YES	Go to step 8.
		NO	Modify connector.

Step 4	Inspection items		Inspection of solenoid connector
	Maintenance item		Inspection of connector
	Inspection condition		–
	Requirements		• Connector is properly connected. • No trace of water entry is found. • No corrosion is found in terminal. • Connection to terminal is appropriate.
	Inspection result (Is the judging standard satisfied?)	YES	Go to step 5.
		NO	Modify connector.

Step 5	Inspection items		Inspection of solenoid unit
	Maintenance item		Measure value of resistance between connector (ET10A) terminals No. 4 and 9.
	Inspection condition		• Disconnect connector, and measure solenoid side terminal. • Starter switch: OFF
	Requirements		5.5 ± 0.5 Ω
	Inspection result (Is the judging standard satisfied?)	YES	Go to step 6.
		NO	Replacement of automatic transmission

<Step 5 inspection diagram>

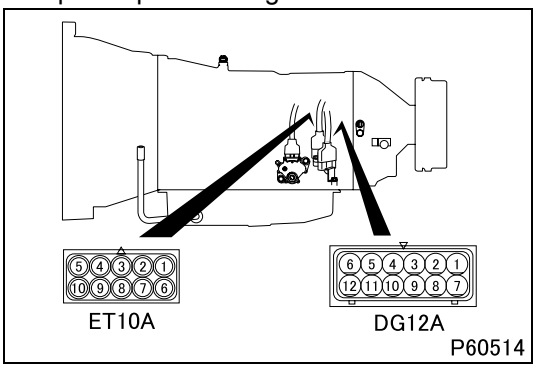

Step 6	Inspection items		Inspection of harness between solenoid and electronic control unit (power supply)
	Maintenance item		Check circuit between connector (ET10A) terminal No. 4 and electronic control unit connector (CY31A) terminal No. 5.
	Inspection condition		Disconnect each device from harness and measure from connection side of harness connector.
	Requirements		There is continuity.
	Inspection result (Is the judging standard satisfied?)	YES	Go to step 7.
		NO	Modify harness.

Step 7	Inspection items		Inspection of harness between solenoid and electronic control unit (ground)
	Maintenance item		Check circuit between connector (ET10A) terminal No. 9 and electronic control unit connector (CY31A) terminal No. 4.
	Inspection condition		Disconnect each device from harness and measure from connection side of harness connector.
	Requirements		There is continuity.
	Inspection result (Is the judging standard satisfied?)	YES	Go to step 8.
		NO	Modify harness.

Step 8	Inspection items		Inspection by control data
	Maintenance item		**<Multi-Use Tester not used>** Check for recurrence of the same diagnosis code. **<Multi-Use Tester used>** Measure item No. 35 “Linear Sol Press 3” of Service Data.
	Inspection condition		Engine in operation <When shifting from N to D> With the brake pedal pressed down, shift the range selector lever (from N to D). <In lock-up state> • Item No. 13 “A/T Oil Temp (OP)” indicates 25°C {77°F} or higher. • Lock-up speed (6th gear, accelerator pedal fully pressed down): 73 to 75 km/h {45.4 to 46.6 mph}
	Requirements		**<Multi-Use Tester not used>** If the same diagnosis code occurs, replace electronic control unit. **<Multi-Use Tester used>** • When shifting from N to D: Varies • In lock-up state: 100 lbf/in^2
	Inspection result (Is the judging standard satisfied?)	YES	If the diagnosis code remains after actual run, replace the electronic control unit.
		NO	Replacement of electronic control unit

[Fault code]
Diagnosis code: U0100/Flash code: 88
[Monitor ID]
68, 69, 70, 71
[Fault (outline)]
Abnormality in controller area network communication
[Diagnosis check]
- Controller area network communication between engine electronic control unit is monitored for abnormality according to the controller area network signal to be received 1 second after the starter switch is turned ON.

[Code generation condition]
- Any of the signals to be received from engine electronic control unit through controller area network communication is not received for 0.5 second.

[Diagnosis check timing]
- Fault diagnosis is continuously performed.

[Diagnostic requirement]
- Starter switch ON battery voltage is higher than 10 V.
- Starter switch: ON (not less than 1 sec.)

[Control effected by electronic control unit during fault]
- Effects no special control.

[Probable cause of trouble]
- Open-circuit or short-circuit of harness between electronic control unit and controller area network resistor
- Malfunction of each connector
- Malfunction of controller area network resistor
- Malfunction of electronic control unit

[Recoverability]
- Recovered if signal becomes normal with starter switch in ON position.

[Electronic Control Unit Connection Diagram]

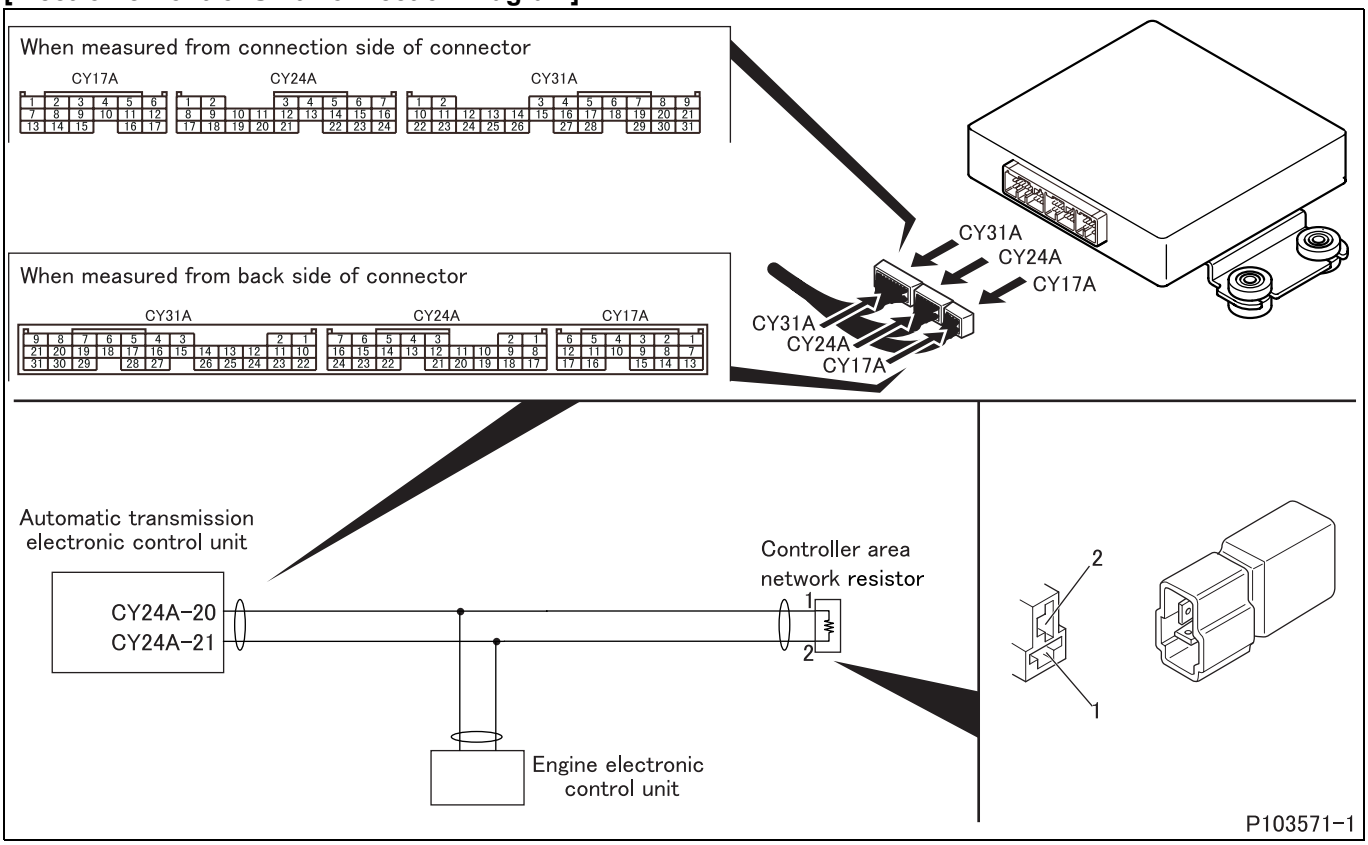

[Parts Identification and Location]

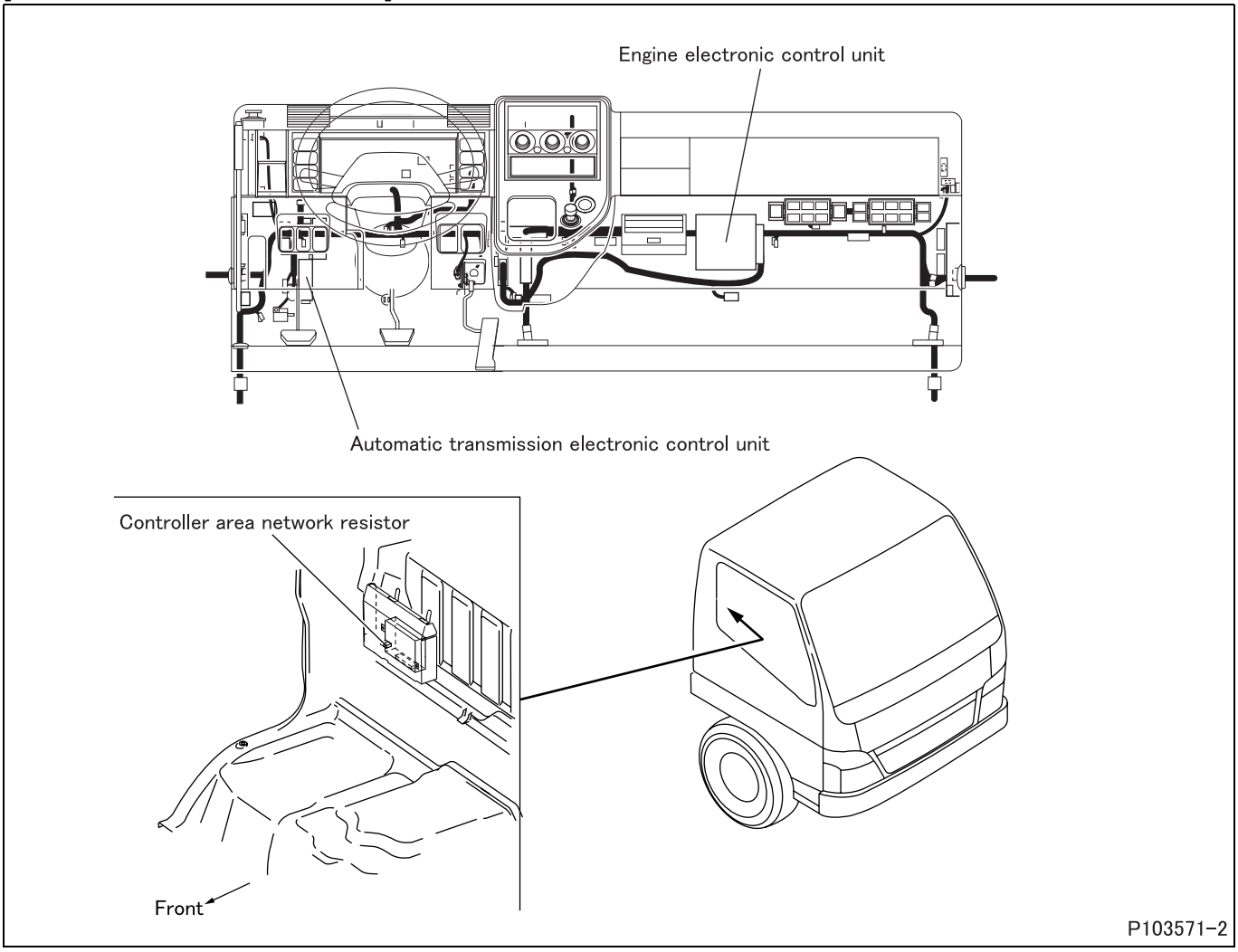

[Fault diagnosis]

- Perform checks in the sequence of the following steps.

Step 1	Inspection items		Inspection by electronic control unit connector
	Maintenance item		Measure value of resistance between connector (CY24A) terminal No. 20 and 21.
	Inspection condition		• Disconnect the engine electronic control unit and automatic transmission electronic control unit connectors, and measure from connection side of harness connector. • Starter switch: OFF
	Requirements		120 ± 6 Ω
	Inspection result (Is the judging standard satisfied?)	YES	Go to transient fault (See Gr00.).
		NO	Go to step 2.

Step 2	Inspection items		Inspection of electronic control unit connector
	Maintenance item		Inspection of connector
	Inspection condition		–
	Requirements		• Connector is properly connected. • No trace of water entry is found. • No corrosion is found in terminal. • Connection to terminal is appropriate.
	Inspection result (Is the judging standard satisfied?)	YES	Go to step 3.
		NO	Modify connector.

Step 3	Inspection items		Inspection of controller area network resistor connector
	Maintenance item		Inspection of connector
	Inspection condition		–
	Requirements		• Connector is properly connected. • No trace of water entry is found. • No corrosion is found in terminal. • Connection to terminal is appropriate.
	Inspection result (Is the judging standard satisfied?)	YES	Go to step 4.
		NO	Modify connector.

Step 4	Inspection items		Inspection of controller area network resistor unit
	Maintenance item		Measure value of resistance between connector terminals No. 1 and 2.
	Inspection condition		–
	Requirements		120 ± 6 Ω
	Inspection result (Is the judging standard satisfied?)	YES	Go to step 5.
		NO	Replacement of controller area network resistor

<Step 4 inspection diagram>

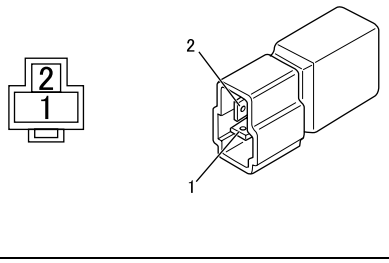

Step 5	Inspection items		Inspection of harness between electronic control unit and controller area network resistor (HIGH)
	Maintenance item		Check circuit between controller area network resistor connector terminal No. 1 and electronic control unit connector (CY24A) terminal No. 20.
	Inspection condition		Disconnect each device from harness and measure from connection side of harness connector.
	Requirements		There is continuity.
	Inspection result (Is the judging standard satisfied?)	YES	Go to step 6.
		NO	Modify harness.

Step 6	Inspection items		Inspection of harness between electronic control unit and controller area network resistor (LOW)
	Maintenance item		Check circuit between controller area network resistor connector terminal No. 2 and electronic control unit connector (CY24A) terminal No. 21.
	Inspection condition		Disconnect each device from harness and measure from connection side of harness connector.
	Requirements		There is continuity.
	Inspection result (Is the judging standard satisfied?)	YES	Go to step 7.
		NO	Modify harness.

Step 7	Inspection items		Inspection by Multi-Use Tester diagnosis code
	Maintenance item		Check for occurrence of the diagnosis code No. P0863 “CAN Communication”.
	Inspection condition		Starter switch: ON
	Requirements		No codes occur.
	Inspection result (Is the judging standard satisfied?)	YES	Go to transient fault (See Gr00.).
		NO	Perform troubleshooting for the controller area network communication system in the engine electronic control. If the fault is not still removed, replace the automatic transmission electronic control unit.

4. Multi-Use Tester Service Data

NOTE

- **It is possible to see service data and actuator tests simultaneously.**

No.	Item	Data	Inspection condition	Requirement
11	IG	■■. ■V	Stater switch ON	Value matches battery voltage.
12	VEH Speed 1	■■■. ■MPH	Vehicle being driven	Value corresponds to speedometer indication.
13	A/T Oil Temp (OP)	■■■■.°F	Engine cold	Value corresponds to ambient temperature.
			Engine in process of warming up	Value gradually increases.
15	Engine Speed	■■■■.rpm	Racing (engine running)	Value corresponds to tachometer indication.
16	Turbine Speed	■■■■.rpm	Vehicle stationary with shift lever in D position	0 rpm
			Vehicle driven from abovementioned condition	Value increases.
17	A/T Oil Temp (TC)	■■■■.°F	Engine cold	Value corresponds to ambient temperature.
			Engine in process of warming up	Value gradually increases.
19	P Pos. SW	ON/OFF	Shift lever in P position	ON
			Shift lever in position except P	OFF
20	R Pos. SW	ON/OFF	Shift lever in R position	ON
			Shift lever in position except R	OFF
21	N Pos. SW	ON/OFF	Shift lever in N position	ON
			Shift lever in position except N	OFF
22	D Pos. SW	ON/OFF	Shift lever in D position	ON
			Shift lever in position except D	OFF
24	3 Pos. SW	ON/OFF	Shift lever in 3 position	ON
			Shift lever in position except 3	OFF
25	VEH Speed 2	■■■. ■MPH	Vehicle being driven	Value corresponds to speedometer indication.
26	Linear Sol Press 1	■■■. ■lbf/in^2	When shifting (1→2, 3→4, 5→6)	Increase
			When shifting (2→3, 4→5)	Decrease
27	Linear Sol Press 2	■■■. ■lbf/in^2	When shifting (2→3, 4→5)	Increase
			When shifting (1→2, 3→4, 5→6)	Decrease
28	OD-OFF SW	ON/OFF	Overdrive switch ON	ON
			Overdrive switch OFF	OFF
31	Shift Valve 1	ON/OFF	In 3rd gear and in 4th gear	ON
			In any gear except above	OFF
32	Shift Valve 2	ON/OFF	In 4th gear, in 5th gear and in 6th gear and in R range	ON
			In any gear except above	OFF
33	Shift Valve 3	ON/OFF	In 1st gear	ON
			In any gear except above	OFF
34	Linear Sol Press 4	■■■. ■lbf/in^2	In R range and 1st gear (large throttle opening)	260 lbf/in^2
			In any range/gear except above	100 lbf/in^2

No.	Item	Data	Inspection condition	Requirement
35	Linear Sol Press 3	■■■. ■lbf/in^2	Shift from N to D	Value changes
			During lockup in 6th gear	100 lbf/in^2
36	Oil Temp Lamp	ON/OFF	Oil temperature abnormal (excessively high)	ON
			Oil temperature normal	OFF
37	Brake SW	ON/OFF	Brake pedal pressed	ON
			Brake pedal not pressed	OFF
38	Exh. Brake SIG	ON/OFF	Decelerating (engine braking in progress)	ON
			Accelerating	OFF
47	ABS SW	ON/OFF	Anti-lock brake system operating	ON
			Anti-lock brake system not operating	OFF
49	Diagnosis SW	ON/OFF	Diagnosis switch fuse removed	ON
			Diagnosis switch fuse fitted	OFF
52	Shift Valve 4	ON/OFF	In R range (large throttle opening)	OFF
			In R range (small throttle opening)	ON
53	Diagnosis Lamp	ON/OFF	Warning lamp illuminated	ON
			Warning lamp not illuminated	OFF
54	Exh Brake Cut SIG	ON/OFF	Decelerate and stop	OFF → ON
			Accelerating	OFF
55	Selector Pos.	P-Range/R-Range/ N-Range/D-Range/ 3-Range/2-Range	Shift lever in P position	P-Range
			Shift lever in R position	R-Range
			Shift lever in N position	N-Range
			Shift lever in D position	D-Range
			Shift lever in 3 position	3-Range
			Shift lever in 2 position	2-Range
56	Gear Pos.	1ST/2ND/3RD/ 4TH/5TH/6TH/N/R	In 1st gear	1ST
			In 2nd gear	2ND
			In 3rd gear	3RD
			In 4th gear	4TH
			In 5th gear	5TH
			In 6th gear	6TH
			In neutral (shift lever in P or N position)	N
			Reversing	R
58	Accel Percent	■■■%	Accelerator pedal not pressed (throttle fully closed)	0%
			Accelerator pedal pressed (throttle wide open)	100%
61	Oil Press SW1	ON/OFF	In 2nd gear, in 4th gear and in 6th gear	ON
			In 1st gear, in 3rd gear and in 5th gear	OFF
62	Oil Press SW2	ON/OFF	In 1st gear, in 3rd gear and in 5th gear	ON
			In 2nd gear, in 4th gear and in 6th gear	OFF

No.	Item	Data	Inspection condition	Requirement
63	Oil Press SW3	ON/OFF	In 3rd gear and in 4th gear	ON
			In 1st gear, in 2nd gear, in 5th gear and in 6th gear	OFF
64	Oil Press SW4	ON/OFF	In 4th gear, in 5th gear and in 6th gear	ON
			In 1st gear, in 2nd gear and in 3rd gear	OFF
65	Oil Press SW5	ON/OFF	In 1st gear	ON
			In 2nd gear, in 3rd gear, in 4th gear, in 5th gear and in 6th gear	OFF
66	Oil Press SW6	ON/OFF	In 1st gear	ON
			In 2nd gear, in 3rd gear, in 4th gear, 5th gear and in 6th gear	OFF
67	Oil Press SW7	ON/OFF	Shift from N to D or during lockup	OFF → ON → OFF
68	Oil Press SW8	ON/OFF	In D range	ON
			In P, R, N range	OFF
69	Coolant Temp	■■■■.°F	Engine cold	Value corresponds to ambient temperature.
			Engine in process of warming up	Value gradually increases.
			Engine stopped after warming up	Value gradually decreases.
71	Shift Valve Press 1	HIGH/LOW	In 3rd gear and in 4th gear	HIGH
			In any gear except above	LOW
72	Shift Valve Press 2	HIGH/LOW	In 4th gear, in 5th gear and 6th gear and in R range	HIGH
			In any gear except above	LOW
73	Shift Valve Press 3	HIGH/LOW	In 1 gear	HIGH
			In any gear except above	LOW
74	Shift Valve Press 4	HIGH/LOW	In R range (large throttle opening)	HIGH
			In R range (small throttle opening)	LOW
78	2 Pos. SW	ON/OFF	Shift lever in 2 position	ON
			Shift lever in position except 2	OFF

5. Possible Causes of Symptoms

Symptoms / Possible causes	Abnormal movement						Shift abnormality					
	Vehicle can be driven in N range.	Transmission stays in P range when lever is moved out of P position.	Vehicle moves with lever in P position.	Vehicle does not move in any range.	Vehicle does not move in R range.	Vehicle does not move in D, 3, and 2 ranges.	Lockup point is excessively high or low.	Lockup does not occur.	Engine braking does not occur in 3 range.	Engine braking does not occur in 2 range.	Kickdown does not occur.	Shift point is excessively high or low.
Abnormality in automatic transmission fluid level and condition				O	O	O						
Abnormality in automatic transmission control	O	O	O	O		O						
Abnormality in inhibitor switch									O	O		
Abnormality in throttle opening signal							O	O	O	O	O	O
Abnormality in turbine speed sensor								O				
Abnormality in output speed sensor							O	O	O	O	O	O
Abnormality in engine speed signal								O				
Abnormality in linear solenoid 1											O	
Abnormality in linear solenoid 2											O	
Abnormality in linear solenoid 3				O	O	O	O	O				
Abnormality in shift solenoid 1											O	
Abnormality in shift solenoid 2				O	O	O					O	
Abnormality in shift solenoid 3								O			O	
Abnormality in automatic transmission electronic control unit							O	O	O	O	O	O
Abnormality in torque converter				O	O	O		O				
Abnormality in automatic transmission-proper	O	O	O	O	O	O	O	O	O	O	O	

Symptoms / Possible causes	Shift abnormality													
	Downshifts from 6th gear to 5th gear do not take place.	Downshifts from 5th gear to 4th gear do not take place.	Downshifts from 4th gear to 3rd gear do not take place.	Downshifts from 3rd gear to 2nd gear do not take place.	Downshifts from 2nd gear to 1st gear do not take place.	Upshifts from 5th gear to 6th gear do not take place.	Upshifts from 4th gear to 5th gear do not take place.	Upshifts from 3rd gear to 4th gear do not take place.	Upshifts from 2nd gear to 3rd gear do not take place.	Upshifts from 1st gear to 2nd gear do not take place.	Engine revs during shifts from 2nd gear to 3rd gear.	Engine revs during shifts from 3rd gear to 4th gear.	Engine revs during shifts from 4th gear to 5th gear.	Engine revs during shifts from 5th gear to 6th gear.
Abnormality in inhibitor switch								O	O					
Abnormality in throttle opening signal											O	O	O	O
Abnormality in vehicle speed sensor	O	O	O	O	O	O	O	O	O	O				
Abnormality in engine speed sensor											O	O	O	O
Abnormality in linear solenoid 1	O	O	O	O	O	O	O	O	O	O	O	O	O	O
Abnormality in linear solenoid 2	O	O	O	O	O	O	O	O	O	O	O	O	O	O
Abnormality in shift solenoid 1	O	O	O	O	O	O	O	O	O	O				
Abnormality in shift solenoid 2	O	O	O	O	O	O	O	O	O	O				
Abnormality in shift solenoid 3	O	O	O	O	O	O	O	O	O	O				
Abnormality in oil pressure switch 1	O	O	O	O	O	O	O	O	O	O	O	O	O	O
Abnormality in oil pressure switch 2	O	O	O	O	O	O	O	O	O	O	O	O	O	O
Abnormality in oil pressure switch 3	O	O	O	O	O	O	O	O	O	O				
Abnormality in oil pressure switch 4	O	O	O	O	O	O	O	O	O	O				
Abnormality in oil pressure switch 5	O	O	O	O	O	O	O	O	O	O				
Abnormality in oil pressure switch 6	O	O	O	O	O	O	O	O	O	O				
Abnormality in overdrive OFF switch						O	O							
Abnormality in automatic transmission electronic control unit	O	O	O	O	O	O	O	O	O	O	O	O	O	O
Abnormality in automatic transmission-proper	O	O	O	O	O	O	O	O	O	O	O	O	O	O

Symptoms / Possible causes	Excessive shift shock													
	During lockup	During shifts from 6th gear to 5th gear	During shifts from 5th gear to 4th gear	During shifts from 4th gear to 3rd gear	During shifts from 3rd gear to 2nd gear	During shifts from 2nd gear to 1st gear	During shifts from 5th gear to 6th gear	During shifts from 4th gear to 5th gear	During shifts from 3rd gear to 4th gear	During shifts from 2nd gear to 3rd gear	During shifts from 1st gear to 2nd gear	During shifts from N range to R range and from N range to D range	During shifts from N range to R range	During shifts from N range to D range
Abnormality in throttle opening signal	O	O	O	O	O	O	O	O	O	O	O	O	O	O
Abnormality in turbine speed sensor	O	O	O	O	O	O	O	O	O	O	O	O	O	O
Abnormality in engine speed sensor	O	O	O	O	O	O	O	O	O	O	O	O	O	O
Abnormality in linear solenoid 1		O	O	O	O	O	O	O	O	O	O			
Abnormality in linear solenoid 2		O	O	O	O		O	O	O					
Abnormality in linear solenoid 3	O											O	O	O
Abnormality in oil pressure switch 1											O			
Abnormality in automatic transmission electronic control unit	O	O	O	O	O	O	O	O	O	O	O	O	O	O
Abnormality in torque converter	O													
Abnormality in automatic transmission-proper	O	O	O	O	O	O	O	O	O	O	O	O	O	O

Symptoms / Possible causes	Clutch slippage, judder							Other				
	In 6th gear	In 5th gear	In 4th gear	In 3rd gear	In 2nd gear	In 1st gear	In R range	During forward movement and during reverse movement	Transmission overheats; oil emerges from breather.	Engine stalls when R, D, or 3, 2 range is selected or when vehicle is stationary.	Engine can be started in range except N and P.	Engine cannot be started in N and P ranges.
Abnormality in automatic transmission fluid level and condition									O			
Abnormality in control linkage											O	O
Abnormality in inhibitor switch											O	O
Abnormality in throttle opening signal	O	O	O	O	O	O	O	O				
Abnormality in turbine speed sensor	O	O	O	O	O	O	O	O				
Abnormality in linear solenoid 1	O	O	O	O	O							
Abnormality in linear solenoid 2	O	O	O	O	O		O	O				
Abnormality in linear solenoid 3						O	O	O		O		
Abnormality in PL linear solenoid	O	O	O	O	O	O	O	O	O			
Abnormality in shift solenoid 3										O		
Abnormality in gain change solenoid	O	O	O	O	O	O	O	O				
Abnormality in automatic transmission electronic control unit	O	O	O	O	O	O	O	O	O			
Abnormality in torque converter									O	O		
Abnormality in automatic transmission-proper	O	O	O	O	O	O	O	O	O	O		

ON-VEHICLE INSPECTION AND ADJUSTMENT

1. Inspection of Automatic Transmission Oil Leakage

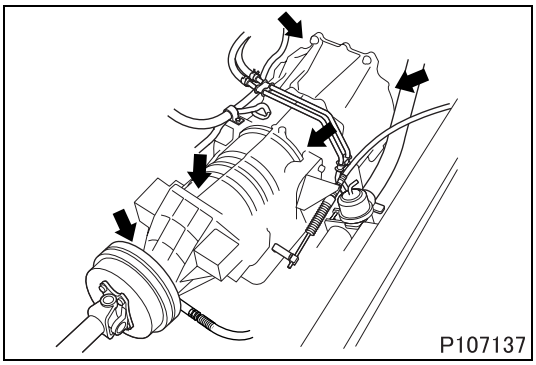

1.1 Inspection of oil leakage at each part of transmission body

- Check the oil leakage at each part of automatic transmission body in visual.
  If the oil leakage is found, replace the defective part.

1.2 Inspection of oil leakage around transmission mounting part

- Check there is not oil stain on flywheel housing and automatic transmission mounting part caused by oil leakage from engine.
- If there is the oil stain, remove the automatic transmission and clean the mounting surface of converter housing and flywheel housing using brake cleaner etc. after repairing oil leakage part. Because the oil stain may loosen the automatic transmission mounting bolts. (See “REMOVAL AND INSTALLATION OF AUTOMATIC TRANSMISSION”.)

2. Check for Looseness in Automatic Transmission Mounting Bolts

Tightening torque (Unit: N·m {ft.lbs, kgf·m})

Mark	Parts to be tightened	Tightening torque	Remarks
–	Bolt (automatic transmission mounting)	47 {35, 4.8}	M10
		82 {60, 8.4}	M12

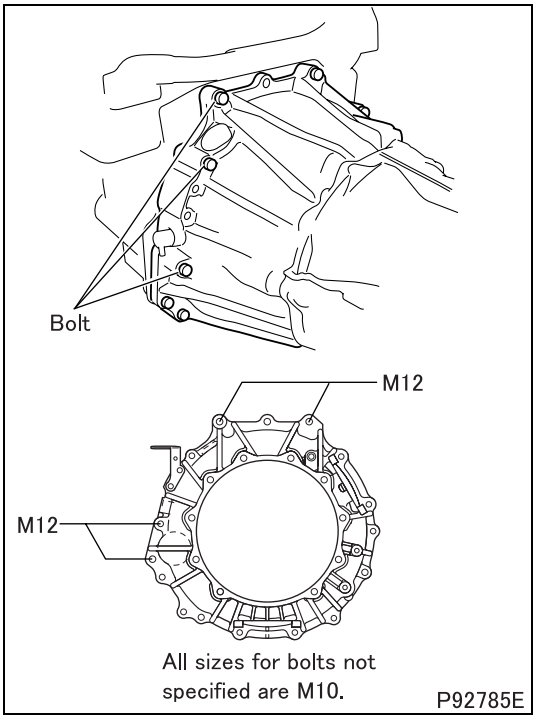

- Check the automatic transmission mounting bolts for looseness.
- Retighten any loose bolt to the specified torque.

3. Inspection of Play in Companion Flange and Looseness in Lock Nut

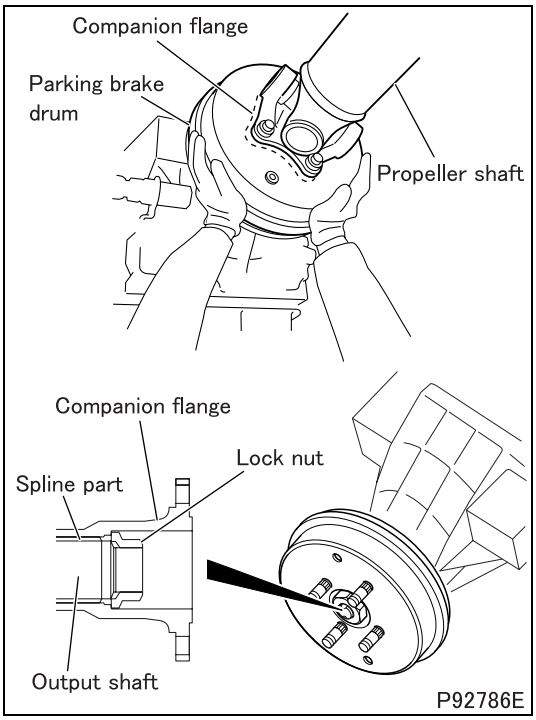

- Move the parking brake drum or companion flange in axial and vertical directions to check for excessive play between the companion flange and output shaft.
- If excessive play is detected, remove the propeller shaft, then check the lock nut for looseness and the splines on companion flange and output shaft for abnormalities.
- If found loose, tighten the lock nut to the specified torque, then crimp it at two places. (See “PARKING BRAKE”.)
- If the companion flange is found detective, replace the part. (See “PARKING BRAKE” section.)
- If the companion flange is not found detective, the output shaft may be defective, replace automatic transmission.

4. Inspection of Automatic Transmission Fluid

Lubricant and/or sealant

Mark	Points of application	Specified lubricant and/or sealant	Quantity
–	Automatic transmission	Mobil ATF3309 or equivalent	–

- If the automatic transmission fluid level is too low, the pump can draw in air together with the automatic transmission fluid, and the resulting air bubbles can make the automatic transmission fluid spongy, resulting in a pressure reduction that causes the clutches in the automatic transmission to slip.
- If the automatic transmission fluid level is too high owing to incorrect replenishment, rotating parts can agitate it, resulting in air bubbles that, as with an excessively low automatic transmission fluid level, make the automatic transmission fluid spongy, resulting in a pressure reduction that causes the clutches in the automatic transmission to slip.
- Whether the automatic transmission fluid level is too low or too high, air bubbles lead to overheating and to oxidation of and varnish formation by the oil, thereby impeding proper operation of the valves and clutches.
- Air bubbles can also cause foaming such that automatic transmission fluid emerges from the vent hole and filler tube of the automatic transmission. This phenomenon can be mistaken for automatic transmission fluid leakage.
- To prevent the above mentioned problems, you must check the automatic transmission fluid level accurately in accordance with the following instructions.

4.1 Inspection of automatic transmission fluid condition

- If the automatic transmission fluid smells burned and contains particles of metal and friction material, a complete overhaul of the automatic transmission is necessary. Carefully inspect the automatic transmission fluid that adheres to the level gauge. If you have any doubts about the condition of the automatic transmission fluid, take a sample and perform another check.

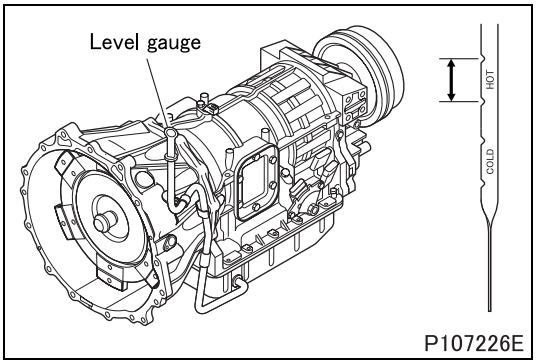

4.2 Inspection of automatic transmission fluid level

- Drive the vehicle until the automatic transmission fluid is adequately warm (70 to 80°C {160 to 175°F}).
- Stop the vehicle on a level surface, securely apply the parking brake, and apply chocks to the wheels.
- With the engine idling, slowly move the range selector lever from the P position to each position through L then back to the P position to ensure that the hydraulic circuit is filled with automatic transmission fluid.
- Remove all dirt from the top of the filler tube.
- With the engine still idling, withdraw the level gauge, wipe the ATF off it, and re-insert it. Then, withdraw the level gauge again and check the automatic transmission fluid level.
- The automatic transmission fluid level is acceptable if the level on the level gauge is within the HOT range.

CAUTION ⚠

- **Be sure to inspect the automatic transmission fluid level with the vehicle parked on a level surface.**
- **Be sure to inspect the automatic transmission fluid level with the engine idling and with the N range selected. If the engine was not running during the inspection, the automatic transmission fluid level would look higher.**
- **Since the engine is running, you must pay attention to safety. Be careful not to get trapped or burned.**
- **Keep the engine idling until you have finished adjusting the automatic transmission fluid level. Do not increase the engine speed.**

- If the automatic transmission fluid level is too low, add specified automatic transmission fluid through the filler tube until it reaches the specified part of the level gauge.

CAUTION ⚠

- **Never use the automatic transmission fluid except the specified one.**

5. Replacement of Automatic Transmission Fluid

Tightening torque (Unit: N·m {ft.lbs, kgf·m})

Mark	Parts to be tightened	Tightening torque	Remarks
–	Drain plug	27 {20, 2.8}	–

Lubricant and/or sealant

Mark	Points of application		Specified lubricant and/or sealant	Quantity
–	Automatic transmission	Replaced with oil pan removed	Mobil ATF3309 or equivalent	Approx. 8.4 L {8.9 qts}
		Replaced with drain plug removed		Approx. 6.4 L {6.8 qts}

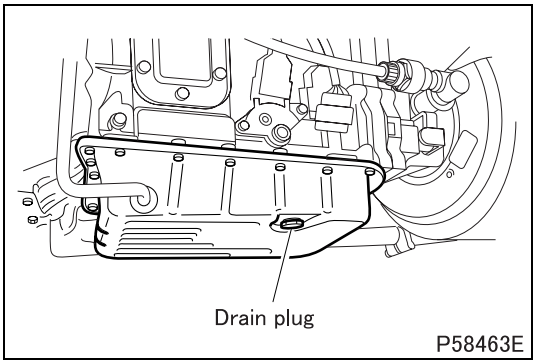

5.1 Draining

- Place a container under the transmission oil pan. Remove the drain plug near the front of the oil pan and allow the automatic transmission fluid to drain out.
- At the same time, check whether the drained automatic transmission fluid is dirty and whether it contains metallic particles.
  Note that the automatic transmission fluid will drain out more quickly if you warm it by allowing the engine to warm up.

CAUTION ⚠

- **The automatic transmission fluid is extremely hot immediately after driving. To avoid the risk of being scalded, wait for the automatic transmission fluid to cool to a safe temperature before starting work.**
- **It is not possible to drain out the automatic transmission fluid that is in the hydraulic circuit, torque converter, and oil cooler.**

- At this point, approximately 2 L {2.1 qts} of automatic transmission fluid remains in the oil pan. If you wish to replace this automatic transmission fluid, remove the oil pan.

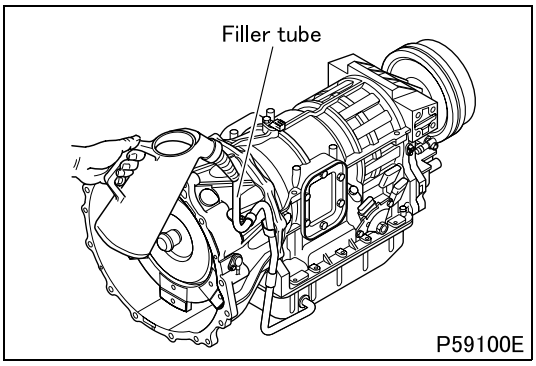

5.2 Filling

- Make ready the new automatic transmission fluid.
- Fit the oil pan drain plug and gasket in their original conditions.
- Supply new automatic transmission fluid through the filler tube in a quantity equivalent to that of the automatic transmission fluid that drained out.

CAUTION ⚠

- **Never use the automatic transmission fluid except the specified one.**
- **Be careful not to allow dirt and other foreign matter to enter.**

- Place the range selector lever in the P position. Start the engine and allow it to idle for at least 2 minutes.
- Place the range selector lever in each other position then return it to the P position.

CAUTION ⚠

- **Keep the engine idling. Do not rev the engine.**

- Check the automatic transmission fluid level.

5.3 Fluid leakage

- Check the torque converter housing for fluid leakage. If fluid leakage is found, locate the origin of the leakage.
  - If leakage is found on the torque converter or the surrounding area, it is not necessarily automatic transmission fluid but can possibly be leaked engine oil.
  - Automatic transmission fluid is red in color and therefore is distinguishable from engine oil.
  - If the fluid that is leaking is automatic transmission fluid, check carefully whether it is from the torque converter, or from the transmission (through the oil seal of the oil pump housing or from between the oil pump housing and transmission case).

6. Stall Test

Service standards

Mark	Maintenance item	Standard value	Limit	Remedy
–	Stall speed	2000 ± 150 rpm	–	Replace

6.1 Purpose of stall test

- A stall test is performed to check for slipping of the frictional elements in the transmission and of the one-way clutch in the torque converter. It gives an indication of the torque converter's operating condition and of the engine's overall performance.

6.2 Test procedure

CAUTION ⚠

- **Before performing the test, make sure there is no worker in front and at the rear of the vehicle.**

- Before performing a stall test, inspect the engine coolant, engine oil, and automatic transmission fluid levels. Then, allow the engine and transmission to warm up.
- To prevent the vehicle from moving, apply the parking brake and place chocks before and after the front and rear wheels. Also, hold down the brake pedal firmly when pressing the accelerator pedal during the test.
- Start the engine and move the range selector lever to the D position.
- Gradually press the accelerator pedal until it reaches the end of its stroke. When the engine speed stabilizes, promptly read the engine speed (this is the stall speed) and release the accelerator pedal.

CAUTION ⚠

- **The period during which the accelerator pedal is fully pressed must be shorter than 5 seconds. Complete the measurement within this period.**
- **If the engine speed does not stabilize (if the engine speed continues to gradually increase or the engine suddenly revs), immediately stop the test.**

- Move the range selector lever to the N position, then allow the engine to cool down by running it at 1200 rpm for one minutes or longer.
- Perform the test procedure similarly for the R range.

6.3 Evaluation of test results

Test result	Main causes
Stall speed is lower than standard value in each range.	Engine output is insufficient. (See Gr11.)
	One-way clutch in torque converter is malfunctioning.
Stall speed is higher than standard value in D range.	Clutch No. 1 is slipping.
	One-way clutch is malfunctioning.
	Line pressure is too low.
Stall speed is higher than standard value in R range.	Clutch No. 3 is slipping.
	Brake No. 2 is slipping.
	Line pressure is too low.

- If abnormalities are found in the automatic transmission unit itself, replace automatic transmission.

7. Time Lag Test

Service standards

Mark	Maintenance item		Standard value	Limit	Remedy
–	Time lag	With shift from N to D	0.7 sec	–	Replace
		With shift from N to R	1.2 sec		

7.1 Purpose of time lag test

- A time lag test is performed to check the respective conditions of the one-way clutch, clutch No. 1, clutch No. 3, and brake No. 2.

7.2 Test procedure

CAUTION ⚠

- **Before performing the test, make sure there is no worker in front and at the rear of the vehicle.**

- Raise the oil temperature to 50 to 80°C {120 to 175°F} (the range that corresponds to normal vehicle operation).
- Apply chocks to the front and rear wheels from both sides and apply the parking brake to hold the vehicle in place.
- Start the engine and check the idling speed.
- While stepping on the brake pedal, move the range selector lever from the N position to the D position. Use a stopwatch to measure the time (time lag) that elapses until you feel shock.
- In a similar manner, measure the time lag for a shift from the N range to the R range.

7.3 Evaluation of results

Test result	Conceivable cause
Time lag with shift from N to D is too long.	Line pressure is too low.
	Clutch No. 1 is slipping.
	One-way clutch is malfunctioning.
Time lag with shift from N to R is too long.	Line pressure is too low.
	Clutch No. 3 is slipping.
	Brake No. 2 is slipping.

- If abnormalities are found in the automatic transmission unit itself, replace automatic transmission.

8. Line Pressure Test

Service standards

Mark	Maintenance item			Standard value	Limit	Remedy
–	Line pressure	At idling speed	D range	1000 to 2010 kPa {145 to 290 psi, 10.2 to 20 kgf/cm^2}	–	Replace
			R range			
		At stalling speed	D range	1660 to 2010 kPa {240 to 290 psi, 17 to 20 kgf/cm^2}		
			R range			

Tightening torque (Unit: N·m {ft.lbs, kgf·m})

Mark	Parts to be tightened	Tightening torque	Remarks
–	Pressure sensing plug	27 {20, 2.8}	1/2-20 UNF

8.1 Purpose of line pressure test

- A line pressure test is performed to check the performance of the oil pump, to check the functionality of the control valve, and to check parts for oil leakage.

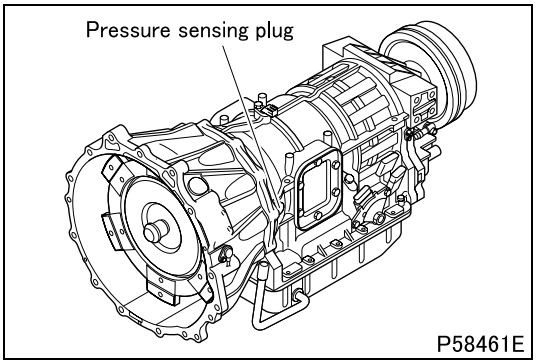

8.2 Test procedure

CAUTION ⚠

- **Before performing the test, make sure there is no worker in front and at the rear of the vehicle.**

- Apply chocks to the front and rear wheels from both sides and apply the parking brake to hold the vehicle in place.
- The line pressure test should be performed by two people. One person moves away from the vehicle and checks the condition of the tires and wheel chocks. The other person performs the test.
- Remove the pressure sensing plug and fit the oil pressure gauge.
- Start the engine. Allow it to warm up until the automatic transmission fluid reaches a temperature of 50 to 80°C {120 to 175°F}. Check the idling speed.
- Press the brake pedal firmly with your left foot. While holding down the brake pedal, shift to the D range. Then, measure the oil pressure while the engine is idling.

- Fully press the accelerator pedal. Quickly measure the oil pressure at the stall speed.

CAUTION ⚠

- **If the engine speed does not reach the stall level and the rear wheels start to turn, ease off the accelerator pedal and stop the test.**

- Take a measurement in a similar manner for the R range.
- After taking the measurements, fit the pressure sensing plug and tighten it to the specified torque.
- If the measured value does not conform to the standard value, locate the possible cause by referring to the following table and inspect.

8.3 Locating possible causes

Test result	Conceivable cause
Measured value is higher than standard value in all ranges.	Regulator valve is sticking.
Measured value is lower than standard value in all ranges.	Regulator valve is sticking.
	Oil pump is worn.
Measured value is lower than standard value in D range only.	Oil leak exists in D range system.
	Clutch No. 1 is abnormal.
Measured value is lower than standard value in R range only.	Oil leak exists in R range system.
	Clutch No. 3 is abnormal.
	Brake No. 2 is abnormal.

- If abnormalities are found in the automatic transmission unit itself, replace automatic transmission.

9. Road Test

Service standards (Unit: km/h {mph})

Location	Maintenance item			Standard value	Limit	Remedy
–	Vehicle speeds during shifts (D range)	Half open (accelerator pedal position: 4/8)	1st → 2nd	8 to 10 {4.97 to 6.21}	–	Replace
			2nd → 3rd	23 to 25 {14.3 to 15.5}	–	
			3rd → 4th	36 to 38 {22.4 to 23.6}	–	
			4th → 5th	47 to 49 {29.2 to 30.4}	–	
			5th → 6th	59 to 61 {36.7 to 37.9}	–	
		Fully open (accelerator pedal position: 8/8)	1st → 2nd	15 to 17 {9.32 to 10.6}	–	
			2nd → 3rd	34 to 36 {21.1 to 22.4}	–	
			3rd → 4th	53 to 55 {32.9 to 34.2}	–	
			4th → 5th	73 to 75 {45.4 to 46.6}	–	
			5th → 6th	95 to 96 {59.0 to 59.7}	–	
		Fully closed (accelerator pedal position: 0/8)	1st → 2nd	8 to 10 {4.97 to 6.21}	–	
			2nd → 3rd	18 to 20 {11.2 to 12.4}	–	
			3rd → 4th	28 to 30 {17.4 to 18.6}	–	
			4th → 5th	39 to 41 {24.2 to 25.5}	–	
			5th → 6th	55 to 57 {34.2 to 35.4}	–	
–	Vehicle speeds during lockup	Half open (accelerator pedal position: 4/8)	2nd gear ON	15 to 17 {9.32 to 10.6}	–	Replace
			3rd gear ON	23 to 25 {14.3 to 15.5}	–	
			4th gear ON	33 to 35 {20.5 to 21.7}	–	
			5th gear ON	40 to 42 {24.9 to 26.1}	–	
			6th gear ON	49 to 51 {30.4 to 31.7}	–	
		Fully open (accelerator pedal position: 8/8)	2nd gear ON	22 to 24 {13.7 to 14.9}	–	
			3rd gear ON	34 to 36 {21.1 to 22.4}	–	
			4th gear ON	46 to 48 {28.6 to 29.8}	–	
			5th gear ON	60 to 62 {37.3 to 38.5}	–	
			6th gear ON	73 to 75 {45.4 to 46.6}	–	
		Fully closed (accelerator pedal position: 0/8)	2nd gear OFF	14 to 16 {8.70 to 9.94}	–	
			3rd gear OFF	21 to 23 {13.0 to 14.3}	–	
			4th gear OFF	28 to 30 {17.4 to 18.6}	–	
			5th gear OFF	37 to 39 {23.0 to 24.2}	–	
			6th gear OFF	45 to 47 {28.0 to 29.2}	–	

9.1 Test procedure

- Before performing a road test, check the fluid level and automatic transmission fluid condition and make sure the selector cable and accelerator control cable are correctly adjusted.
- During the road test, operate the automatic transmission in each range. Check the slip feel and other changes during shifts.
- Check whether the shift feel gets firmer and softer.
- Check the shift points where upshifts and downshifts occur.
- When a Multi-Use Tester is used, check the lockup points by observing when Multi-Use Tester Service Data No. 67 “Oil Press SW7” turns on.
- All data correspond to a differential ratio of 5.285 and to a tire radius of 0.387 m (215/85R16).
- If the differential ratio or tire radius is different, the speeds will be concomitantly slower or higher. Adjust the values in the table accordingly.
- If measurements deviate from specified standard values, replace automatic transmission.

10. Dealer Adjust

• What is Dealer Adjust?

Individual automatic transmissions have different characteristics from each other. By carrying out Adjust Steps 1 to 4, electronic control unit will learn specific characteristics of the automatic transmission that it controls and thereby compensate for improved gear shift quality.

Dealer Adjust must be performed whenever:
- The automatic transmission has been replaced.
- The electronic control unit has been replaced.

NOTE
- **If the dealer adjustment has not performed, ATF temperature warning lamp stays on.**
- **During Dealer Adjust process, the clutches will be activated, which may generate shock loads and/or clutch noise.**
- **To ensure safety, chock all of the front and rear wheels and firmly apply the parking brake.**
- **When the engine speed is set at 1000 to 1500 rpm during Dealer Adjust, firmly press the brake pedal with your left foot.**

10.1 Dealer Adjust procedure

- Turn off all electrical equipment including the air conditioner and headlights.
- Ensure that the parking brake is applied ant that all wheels are chocked.
- Ensure that automatic transmission fluid is at the specified level.
- Start the engine and run it at idle for 5 minutes for warm-up.
- Move the range selector lever form N to D, and from N to R. Repeat this 3 to 5 times.

↓

Enter Adjust Mode
ATF temperature warning lamp flashes (at intervals of 0.2 sec.)

Conditions for entering Adjust Mode
- Diagnosis switch: Open
- Output shaft speed: 0 rpm (vehicle stationary)
- Brake pedal: Pressed
- Automatic transmission fluid temperature: 40 to 90°C {105 to 195°F}
- Engine speed: 500 rpm or above
- Move the lever from D to 3, three times within 10 sec.

If the ATF temperature warning lamp comes on, this means that the temperature of automatic transmission fluid in the oil pan is below the specified level. Warm up the transmission and try entering Adjust Mode again.

↓

Ensure that the engine speed remains stable within the specified idle speed range.

↓

Prepare for Adjust Steps 1 and 2

Conditions for Adjust Steps 1 and 2
- Range selector lever: In D range
- Overdrive switch: ON → OFF (5th and 6th gears disabled)
- Brake pedal: Pressed

NOTE
- **If the vehicle moves after Adjust Steps have started, Dealer Adjust process needs to be stopped (ATF temperature warning lamp illuminates 2 sec. and then extinguishes 1 sec., and repeats this cycle). Stop the engine and try the procedure again from the start.**

↓

(Continued to next page)

(Continued from previous page)

↓

Start Adjust Step 1
ATF temperature warning lamp flashes (intervals: 0.2 sec. → 0.5 sec.)

- Succeeded: ATF temperature warning lamp flashes (at intervals of 0.2 sec.)
- Failed: ATF temperature warning lamp illuminates

If failed, ensure that the engine is running within the specified idle speed range. Prepare for Adjust Steps 1 and 2 again.

↓

Within 30 sec. from the time when Adjust Step 1 has successfully started, press the accelerator pedal to maintain the engine speed within the range of 1000 to 1500 rpm.

↓

Start Adjust Step 2
ATF temperature warning lamp continues to flash (at intervals of 0.2 sec.)

Maintain the current state (engine running at 1000 to 1500 rpm)

- Succeeded: ATF temperature warning lamp extinguishes
- Failed: ATF temperature warning lamp illuminates

If failed, ensure that the engine is running within the specified idle speed range. Prepare for Adjust Steps 1 and 2 again.

↓

Ensure that the engine speed remains stable within the specified idle speed range.

↓

Prepare for Adjust Steps 3 and 4

Conditions for Adjust Steps 3 and 4

- Range selector lever: In R range
- Overdrive switch: ON → OFF (5th and 6th gears disabled)
- Brake pedal: Pressed

↓

Start Adjust Step 3
ATF temperature warning lamp extinguishes → flashes (at intervals of 0.5 sec.)

- Succeeded: ATF temperature warning lamp flashes (at intervals of 0.2 sec.)
- Failed: ATF temperature warning lamp illuminates

If failed, prepare for Adjust Steps 3 and 4 again.

↓

Within 30 sec. from the time when Adjust Step 3 has successfully started, press the accelerator pedal to maintain the engine speed within the range of 1000 to 1500 rpm.

↓

(Continued to next page)

(Continued from previous page)

↓

Start Adjust Step 4
ATF temperature warning lamp continues to flash (at intervals of 0.2 sec.)

Maintain the current state (engine running at 1000 to 1500 rpm)
- Succeeded: ATF temperature warning lamp extinguishes
- Failed: ATF temperature warning lamp illuminates

When the lamp has illuminated or extinguished, release the accelerator pedal and return the engine to idle speed.

If failed, prepare for Adjust Steps 3 and 4 again.

↓

End of Adjust Steps
ATF temperature warning lamp flashes
(extinguishes for 2 sec., then illuminates for 1 sec., and this is repeated)

↓

Move the range selector lever to P range.

↓

Stop the engine. This is the end of Dealer Adjust.
ATF temperature warning lamp extinguishes.

Preparatory Work

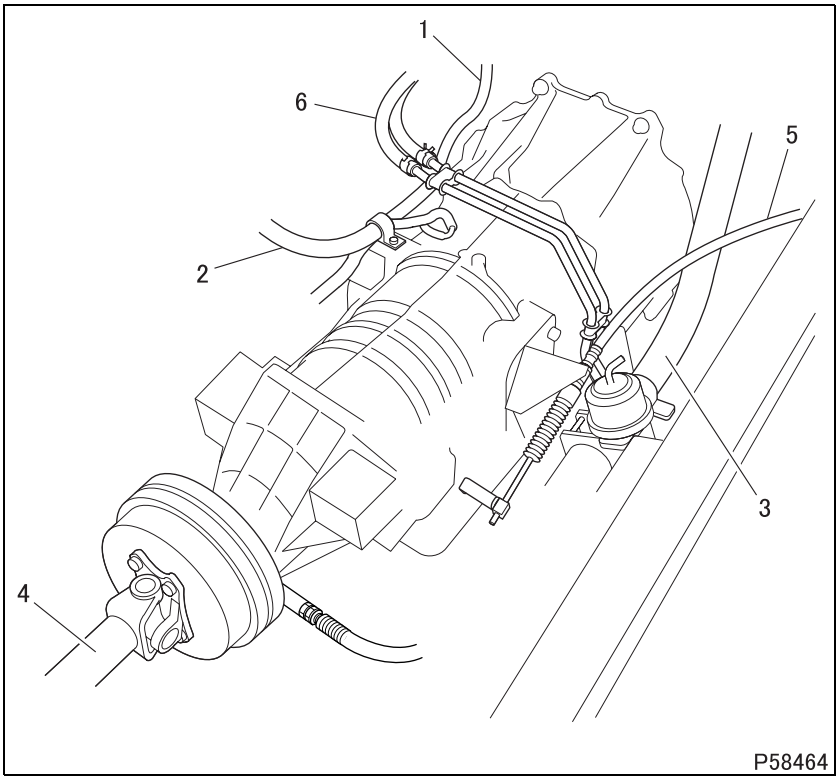

● Removal sequence

1 Filler tube
2 Electrical harness
3 Exhaust pipe
4 Propeller shaft (See Gr25.)
5 Selector cable (See later section.)
6 Oil cooler hose (See later section.)

● Installation sequence

Perform installation by following the removal sequence in reverse.

CAUTION ⚠

- **If the automatic transmission fluid contains a large amount of impurities when you replace the automatic transmission because of an abnormality in the main body of the automatic transmission, flush the oil cooler circuit.**

M E M O

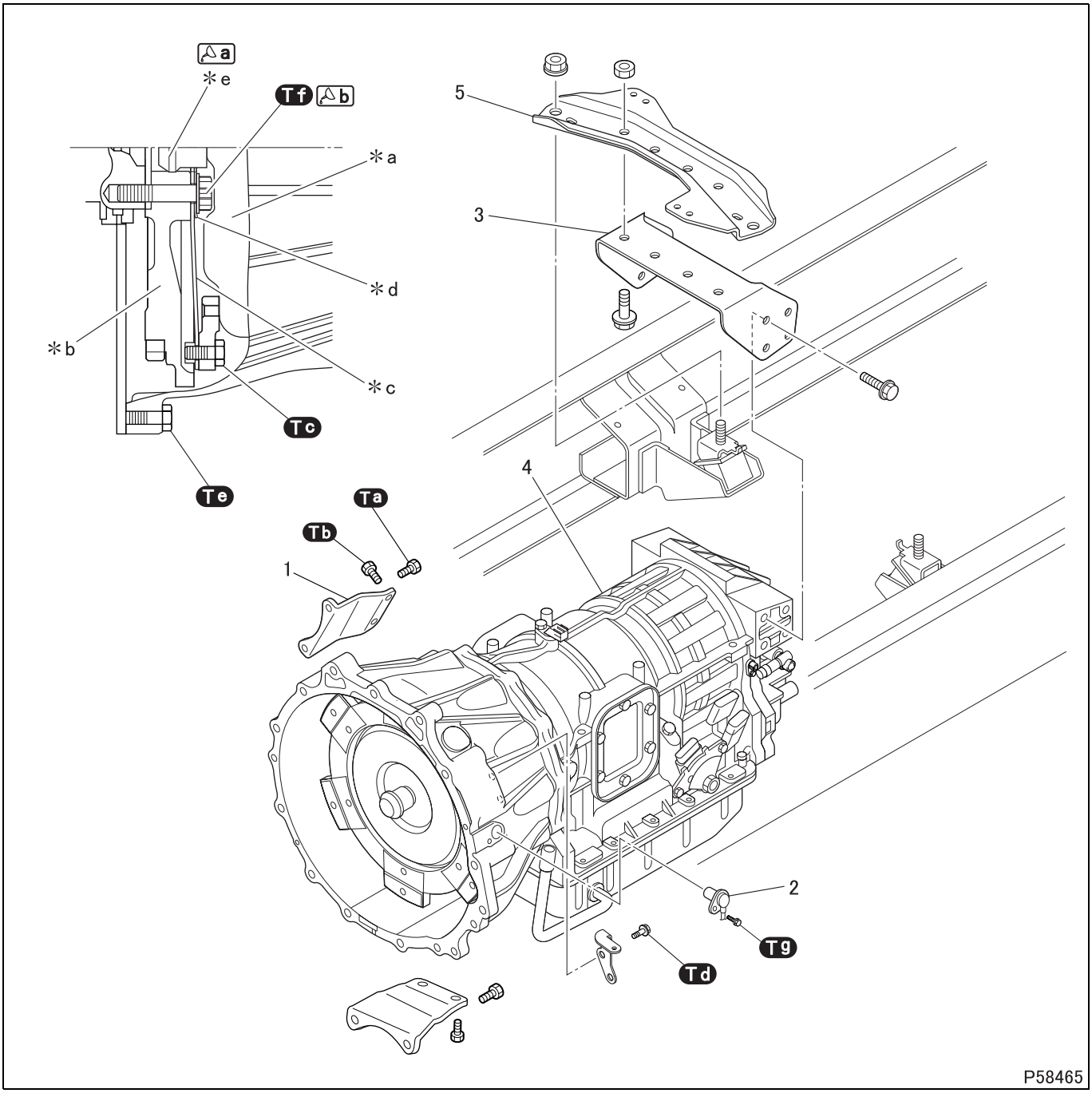

● **Removal sequence**

1 Dust cover
2 Engine speed sensor (See Gr13EA.)
3 Mounting bracket
4 Automatic transmission
5 Mounting support

***a**: Torque converter
***b**: Flywheel
***c**: Drive plate
***d**: Wear plate
***e**: Pilot

● **Installation sequence**

Follow the removal sequence in reverse.

Tightening torque (Unit: N·m {ft.lbs, kgf·m})

Mark	Parts to be tightened	Tightening torque	Remarks
Ta	Bolt (dust cover and automatic transmission mounting)	47 {35, 4.8}	–
Tb	Bolt (dust cover mounting)	13 {9.6, 1.3}	–
Tc	Bolt (flywheel and drive plate mounting)	50 {37, 5.1}	–
Td	Bolt (bracket mounting)	40 {30, 4.1}	–
Te	Bolt (automatic transmission mounting)	82 {60, 8.4}	M12
		47 {35, 4.8}	M10
Tf	Bolt (drive plate mounting)	118 {87, 12} + 90°	Wet
Tg	Bolt (engine speed sensor mounting)	8 {5.9, 0.82}	–

Lubricant and/or sealant

Mark	Points of application	Specified lubricant and/or sealant	Quantity
a	Pilot of torque converter	Molybdenum disulfide grease [NLGI No. 2 (Li soap)]	As required
b	Bolt threads	Engine oil	As required

◆Removal procedure◆

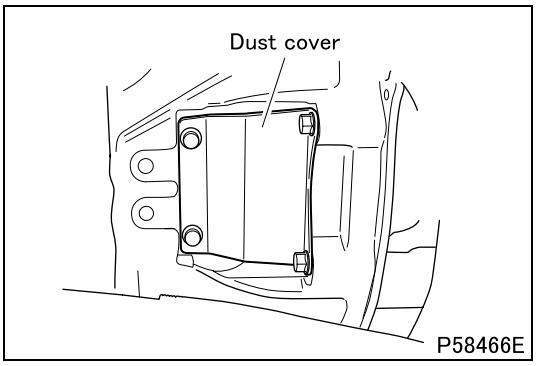

■ **Removal: Automatic transmission**

- Remove the dust cover.

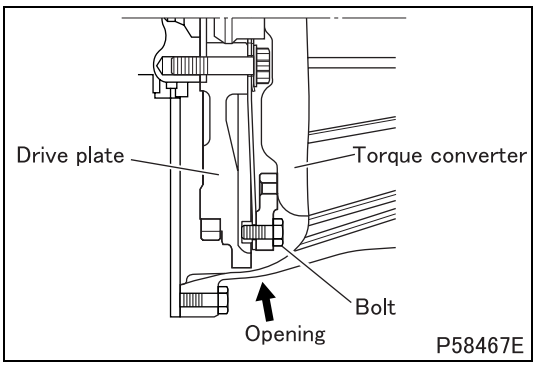

- Crank the engine to bring one of the bolts to the opening.
- Remove the bolt that is accessible through the opening. Also remove all of the rest of the six bolts, cranking the engine to bring each one to the opening in turn.

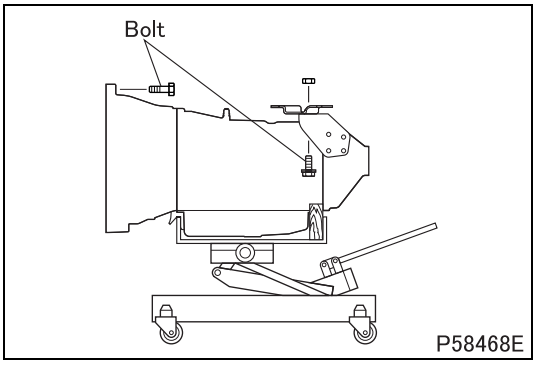

- Support the automatic transmission with a jack and remove each of the bolts.
- Move the automatic transmission rearward to remove it.

CAUTION ⚠

- **Do not apply the jack to the oil pan. Doing so would deform the oil pan and the oil pan gasket.**
- **The torque converter will come away by itself. Be careful not to let it drop.**

NOTE

- **The bolts that join the automatic transmission to the engine are not all the same length. Make a note of the position of each one as you remove it.**

◆Installation procedure◆

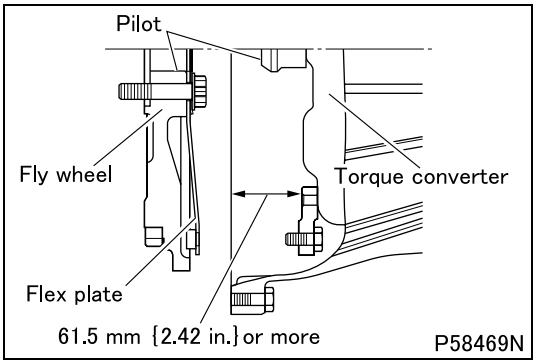

■ Installation: Automatic transmission

- Make sure the torque converter is correctly installed on the automatic transmission. With the torque converter correctly installed, the dimension from the drive plate surface to the case mounting surface is as shown in the diagram.
- Apply grease to the pilot.

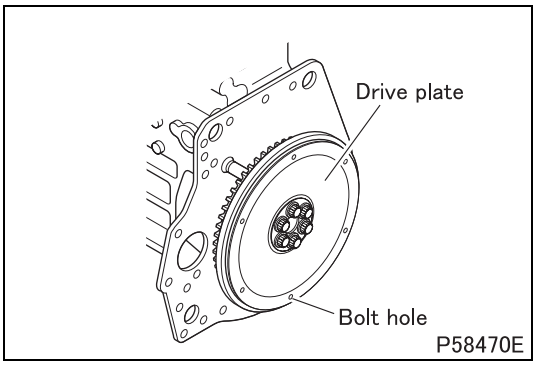

- Position one of the drive plate's mounting bolt holes at the very bottom.

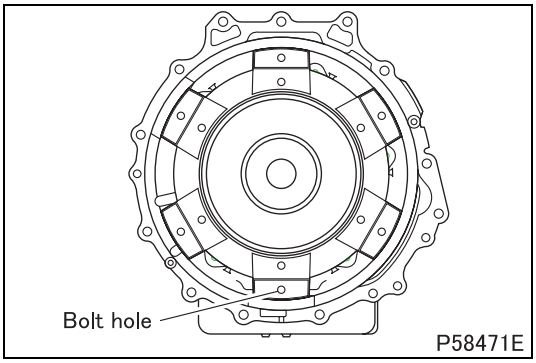

- Position one of the torque converter's mounting bolt holes at the very bottom.

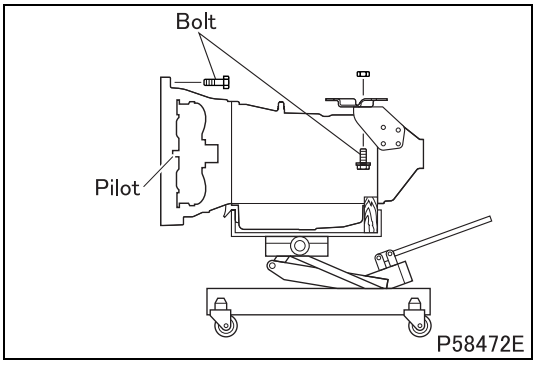

- Wipe all oil and grease off the inside wall of the torque converter housing.
- With the pilot of the torque converter and the dowel pin of the rear plate aligned with each other, slowly move the assembly onto the engine.
- Fit several of the bolts that join the automatic transmission to the engine, then tighten the rear mounting bolt to the specified torque.

NOTE

- **The torque converter can easily come off by itself. Slightly lower the rear of the automatic transmission to keep the torque converter correctly positioned.**

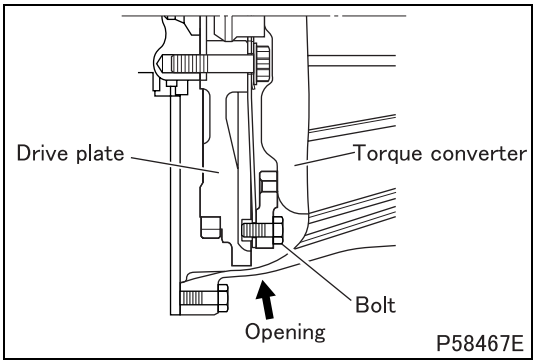

- Through the opening, align the holes for one of the bolts that join the drive plate and the torque converter and fit the bolt.
- Fit all of the rest of the six bolts, cranking the engine to bring the holes to the opening for each one. Next, tighten each bolt to specification, cranking the engine to being each bolt to the opening in turn.

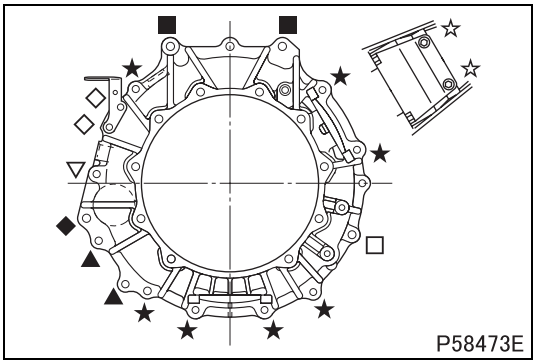

- With the dust cover and bracket mounted using the same bolts, tighten to torque all of the bolts that join the automatic transmission and engine.
  - ▲: M10 × 1.25 - 55
  - ★: M10 × 1.25 - 80
  - □: M10 × 1.25 - 95
  - ◇: M10 × 1.5 - 20 (for bracket)
  - ◆: M12 × 1.75 - 45
  - ■: M12 × 1.75 - 60
  - ▽: M12 × 1.75 - 100
- Tighten the dust cover's remaining mounting bolts (marked ☆) to the specified torque to retain the dust cover.

PARKING BRAKE

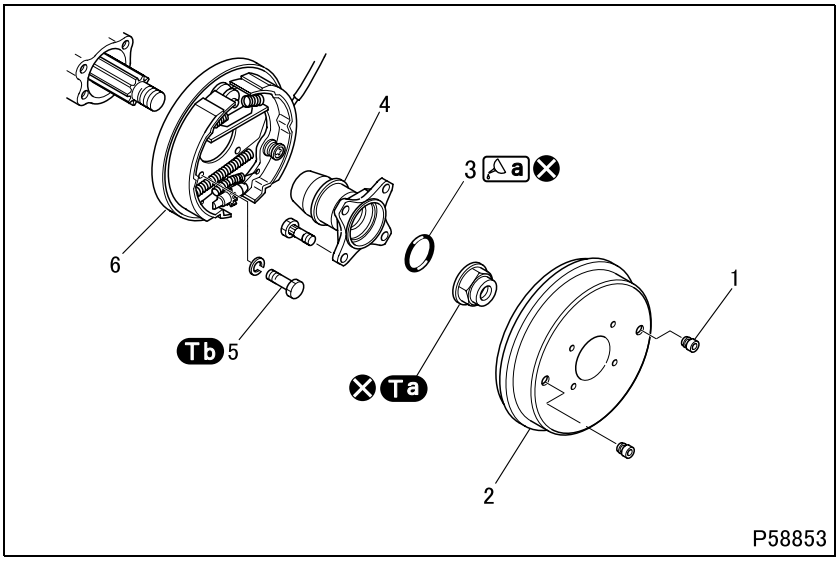

● **Removal sequence**

1 Dust plug
2 Parking brake drum
3 O-ring
4 Companion flange
5 Reamer bolt
6 Parking brake (See Gr36.)

⊗: Non-reusable parts

● **Installation sequence**

Follow the removal sequence in reverse.

Service standards (Unit: mm {in.})

Location	Maintenance item		Standard value	Limit	Remedy
2	Parking brake drum	Inner diameter	$\phi 190\ ^{+0.2}_{0}$ {7.48 $^{+0.0079}_{0}$}	ϕ191 {7.52}	Replace
		Squareness	0 to 0.05 {0 to 0.0020}	–	
		Concentricity	0 to 0.1 {0 to 0.0039}	–	
		Cylindricity	0 to 0.05 {0 to 0.0020}	–	
		Static rotation imbalance	0 to 0.0049 N·m {0 to 0.004 ft.lbs, 0 to 0.5 gf·m}	–	
4	Runout at socket portion of companion flange		0 to 0.15 {0.0059}	0.5 {0.020}	

Tightening torque (Unit: N·m {ft.lbs, kgf·m})

Mark	Parts to be tightened	Tightening torque	Remarks
Ta	Lock nut (companion flange mounting)	190 {140, 19}	After tightening, crimp at two places.
Tb	Reamer bolt	52 to 66.7 {38 to 49, 5.3 to 6.8}	–

Lubricant and/or sealant

Mark	Points of application	Specified lubricant and/or sealant	Quantity
a	O-ring	Mobil ATF3309	As required

Special tools (Unit: mm {in.})

Mark	Tool name and shape	Part No.	Application
a	Flange puller A: ϕ95 {3.74} B: ϕ100 {3.94} C: ϕ90 {3.54} 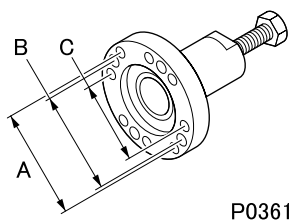	MH061848	Removal of companion flange

◆Removal procedure◆

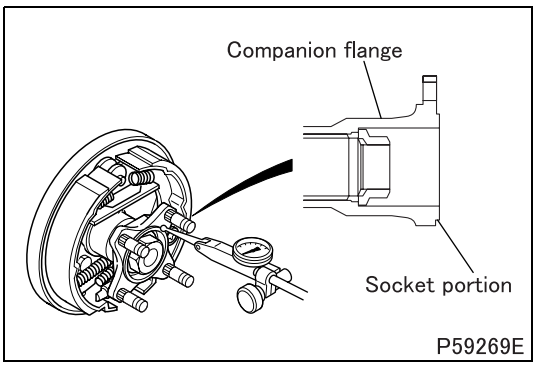

■ **Inspection: Runout of socket portion of companion flange**

- If the measured valve exceeds the limit, replace the companion flange.

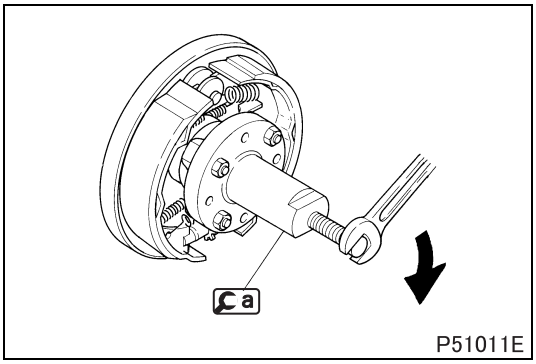

■ **Removal: Companion flange**

- Attach the special tool a to the companion flange with propeller shaft mounting nut. Using a, remove the companion flange.

◆Installation procedure◆

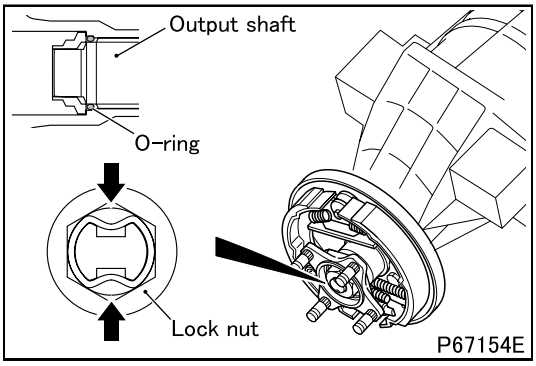

■ **Inspection: Companion flange**

- After installing O-ring to output shaft and tightening the lock nut to the specified torque, crimp the lock nut at two places.
- After installing the companion flange, check the companion flange for excessive play and looseness. (See “ON-VEHICLE INSPECTION AND ADJUSTMENT.”)

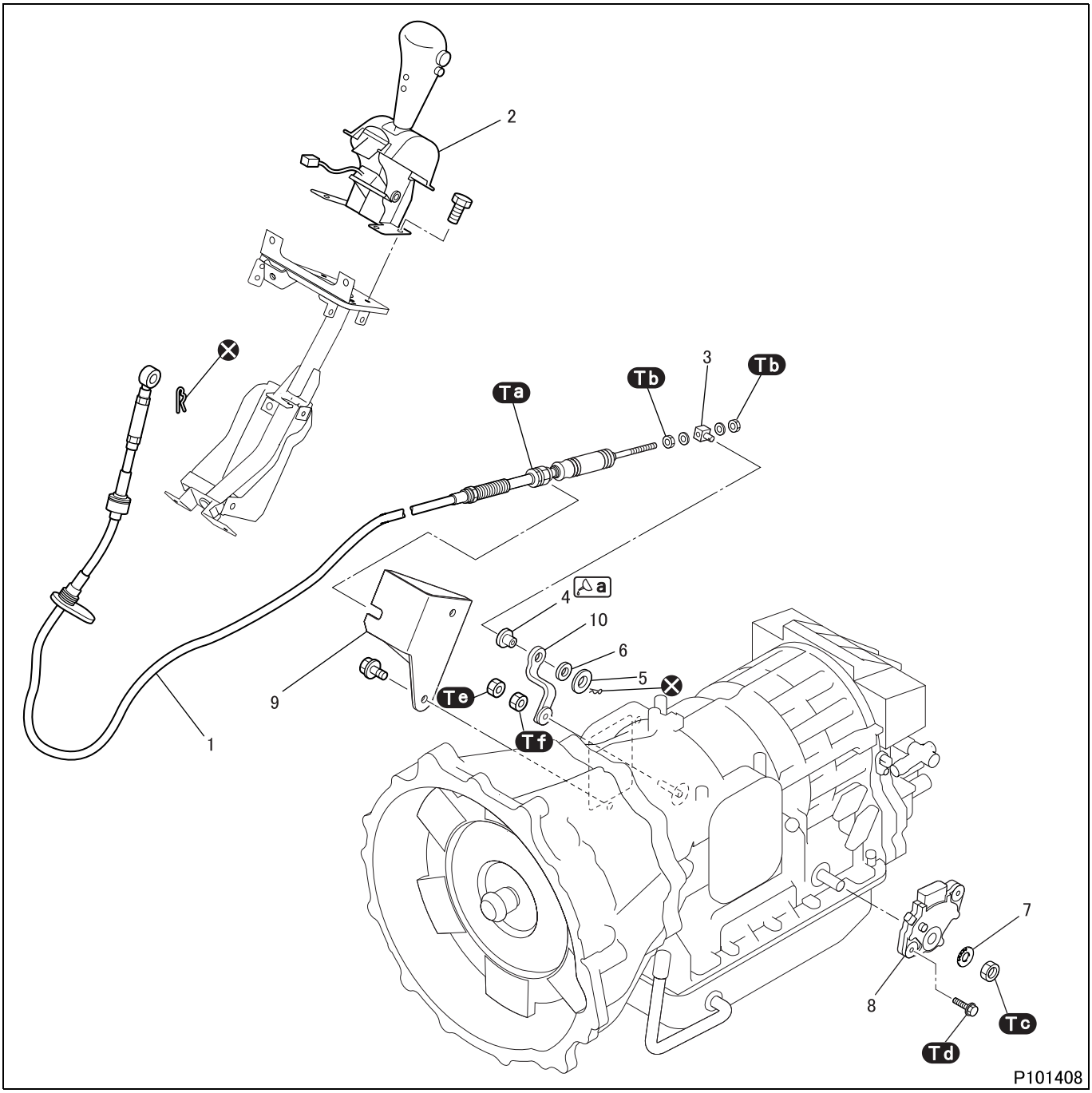

● **Removal sequence**

1 Selector cable
2 Range selector lever (See later section.)
3 Adjuster
4 Bush
5 Plane washer
6 Spacer
7 Lock washer
8 Inhibitor switch
9 Bracket
10 Control lever

⊗: Non-reusable parts

● **Installation sequence**

Follow the removal sequence in reverse.

Tightening torque (Unit: N·m {ft.lbs, kgf·m})

Mark	Parts to be tightened	Tightening torque	Remarks
Ta	Selector cable (mounting on bracket)	59 to 83 {44 to 61, 6.0 to 8.5}	–
Tb	Nut (adjuster mounting)	4 to 6 {3.0 to 4.4, 0.4 to 0.6}	–
Tc	Nut (inhibitor switch mounting)	7 {5.2, 0.7}	–
Td	Bolt (inhibitor switch mounting)	12.5 {9.2, 1.3}	–
Te	Nut (control lever mounting)	15 {11, 1.5}	Outside
Tf	Nut (control lever mounting)	13 {9.6, 1.3}	Inside

Lubricant and/or sealant

Mark	Points of application	Specified lubricant and/or sealant	Quantity
a	Part of bush that slides against adjuster	Wheel bearing grease [NLGI No. 2 (Li soap)]	As required

Special tools

Mark	Tool name and shape	Part No.	Application
a	Plate 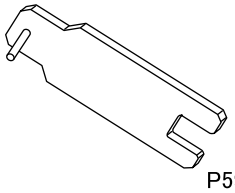 P59101	MH063642	Locating inhibitor switch

◆Installation procedure◆

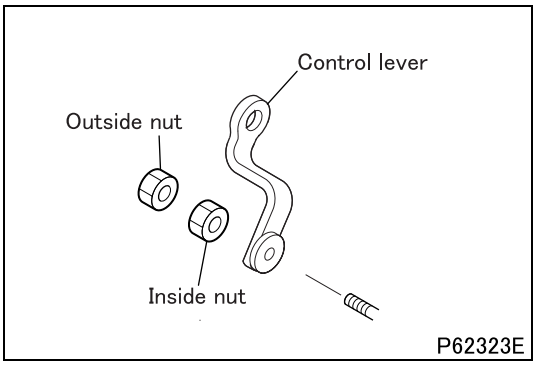

■ Installation: Control lever

- Tighten inside nut to the specified torque and then tighten outside nut to the specified torque with holding the inside nut by spanner.

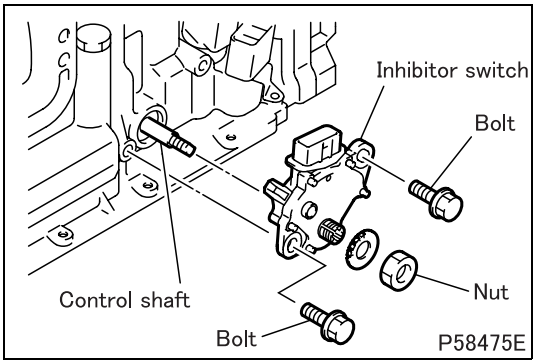

■ Installation: Inhibitor switch

- Position the inhibitor switch onto the control shaft.
- Loosely tighten the bolts (× 2).
- Tighten the nut to the specified torque.

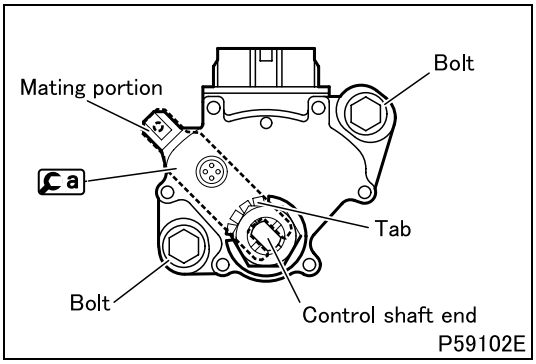

- Loosen the two bolts to enable the special tool a to be installed such that one end of the tool with a pin engages with the mating portion of the inhibitor switch while the other end of the tool engages with the end of the control shaft.
- While holding the inhibitor switch with one hand, tighten the two bolts to the specified torque.
- Stake the nut by bending over two of the tabs on the inhibitor switch.

CAUTION ⚠

- **After installation, check the inhibitor switch if it is normal. This must be confirmed before commencing the following work.**

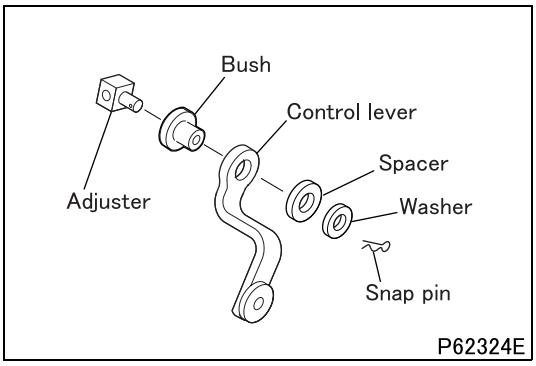

■ Installation: Adjuster

- Check if the adjuster turns smoothly to the control lever after mounting the adjuster to the control lever with the snap pin.
- When if the adjuster does not turn smoothly, replace the adjuster, plane washer, snap pin and control lever.
- Check the abrasion and damage of the brush and the spacer. This damage means dust, breakage, loosen, bend, twist, and so on.

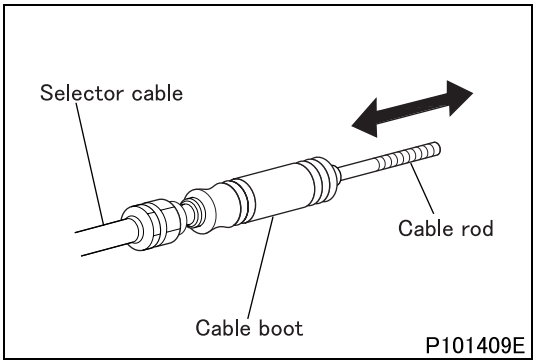

■ Installation: Selector cable

- When the selector cable stroke is not smooth, replace selector cable.
- Check the damage of the cable boot and the cable rod. Replace the selector cable if necessary. This damage means dust, breakage, loosen, bend, twist, and so on.

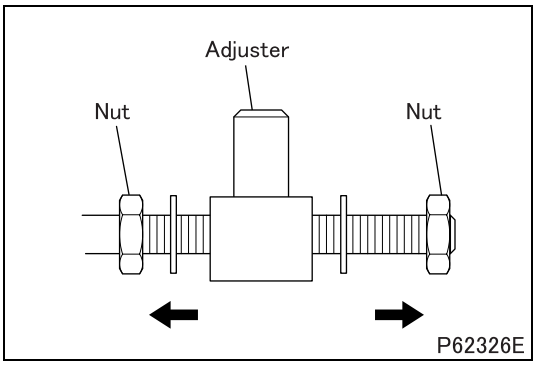

- Loosen the nuts to the both ends of thread.

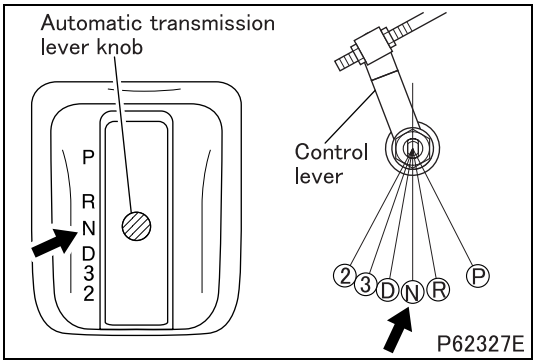

- Place the automatic transmission lever knob inside the cab in the N position. Also, place the control lever on the automatic transmission main body side in the N position.

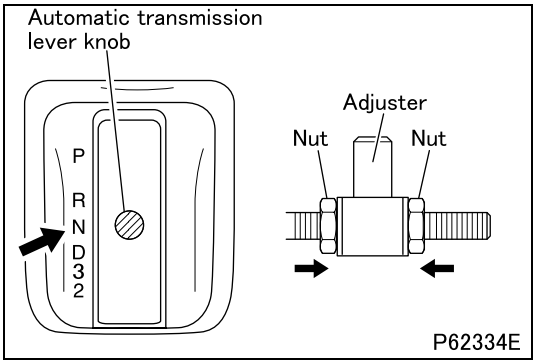

- Confirm that the automatic transmission lever knob inside the cab is in the N position, then tighten the nuts to the specified torque.

CAUTION ⚠

- **Do not move the adjuster's set position when tightening the nuts.**

◆Inspection after installation◆

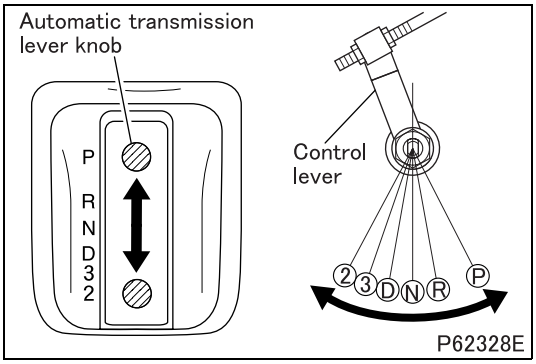

■ Inspection: Operate performance of range selector lever

[Inspection]

- After fixing adjuster, move the automatic transmission lever knob from the P position to the 2 position and back to the P position two or three times and check the following.

(1) The automatic transmission lever knob inside the cab and the control lever on the automatic transmission main body side correctly enter each range position between the 2 position and the P position.

(2) On the meter cluster, the range indicator lamp of the selected range illuminates.

(3) The range selector lever operates smoothly and has a positive in-position feel in each range position.

(4) The starter key can be removed from the key cylinder at the P position.

(5) The backup lamp turns on and the back buzzer sounds in the R position, and the engine starter operates in the N and P position.

CAUTION ⚠

- **This inspection should be performed after taking measures to prevent the vehicle from moving.**
- **Inspect the item (5) after confirming that there is no abnormality related to items (1) to (4).**

- If there is abnormality related to items (1) through (4), adjust the selector cable. If there is abnormality related to item (5), check the backup lamp circuit and the engine starter circuit. (See Gr54.)

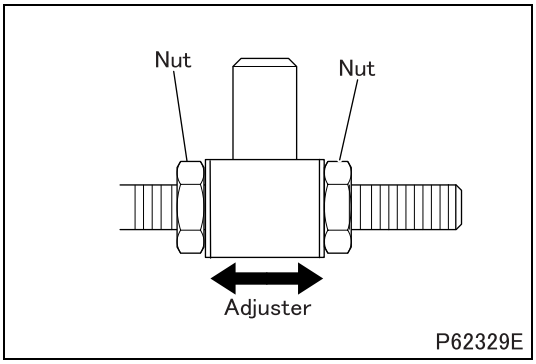

[Adjustment]

- Loosen each nut and then adjust the adjuster position in accordance with the procedure in "■**Installation: Selector cable**".
- If the control lever is shifted toward "2" position, move the adjuster toward the selector cable end. If the lever is shifted toward "P" position, move the adjuster in the opposite direction.
- After adjustment, recheck the operate performance of range selector lever to confirm that there is no abnormality.
- If the abnormality has not solved by the adjustment, check the indicator lamp-related circuit in the meter cluster (See Gr54.) and P range switch.

M E M O

Range Selector Lever

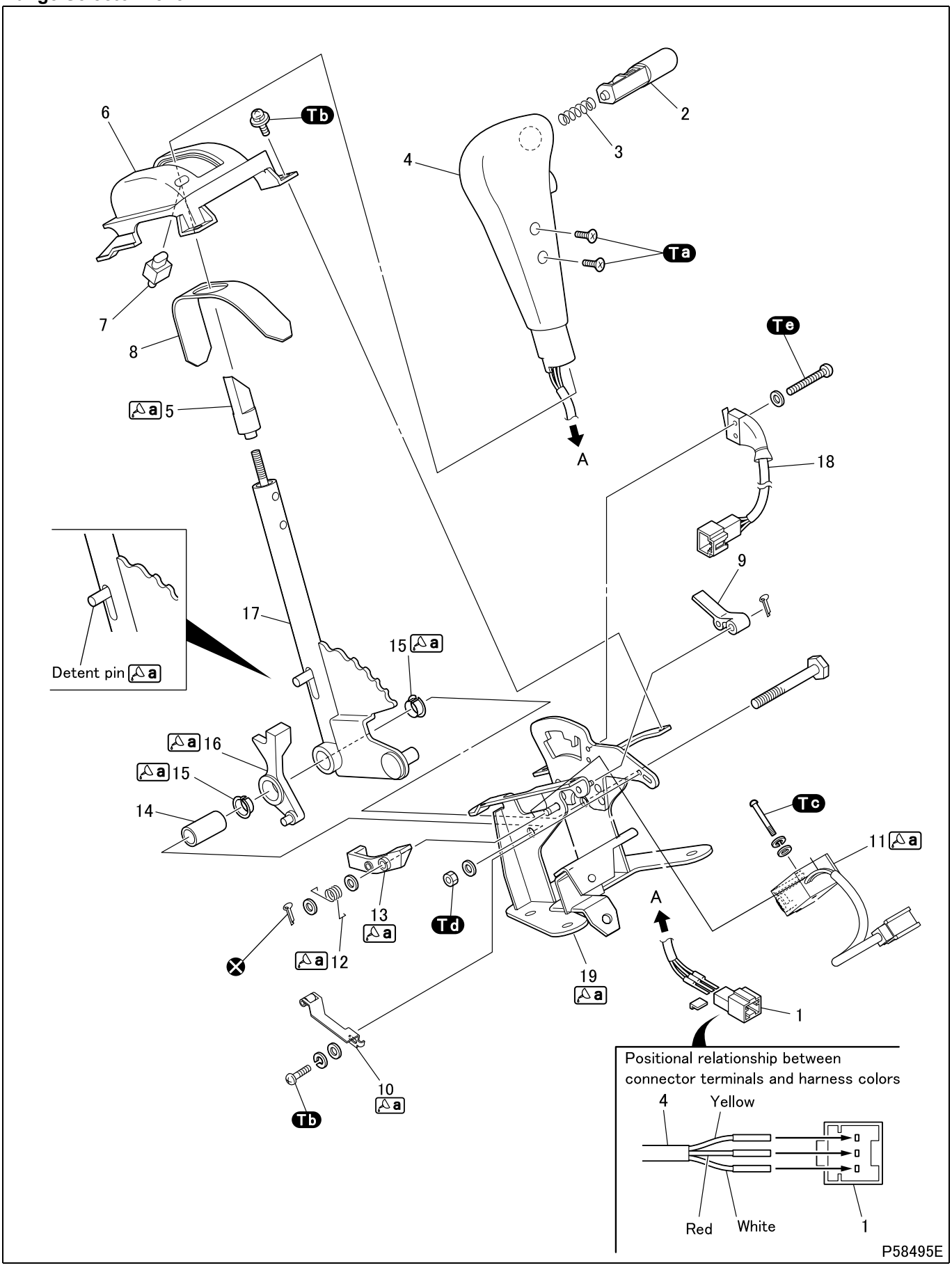

● Removal sequence

1 Connector housing (for overdrive switch)
2 Push-button
3 Spring
4 Knob
5 Sleeve
6 Indicator panel
7 Shift lock cancel button
8 Slider
9 Cam
10 Detent spring
11 Shift lock actuator
12 Spring
13 Arm
14 Pipe
15 Bushing
16 Arm
17 Lever
18 P range switch
19 Bracket

● Installation sequence

Follow the removal sequence in reverse.

Tightening torque (Unit: N·m {ft.lbs, kgf·m})

Mark	Parts to be tightened	Tightening torque	Remarks
Ta	Screw (knob mounting)	1.5 to 2 {1.1 to 1.5, 0.15 to 0.20}	–
Tb	Screw (indicator panel mounting)	1 to 1.5 {0.7 to 1.1, 0.10 to 0.15}	–
	Screw (detent spring mounting)		
Tc	Screw (shift lock actuator mounting)	1 to 2 {0.7 to 1.5, 0.10 to 0.20}	–
Td	Nut (lever mounting)	9 to 14 {6.6 to 10, 0.92 to 1.4}	–
Te	Screw (P range switch mounting)	0.1 to 0.15 {0.074 to 0.11, 0.01 to 0.02}	–

Lubricant and/or sealant

Mark	Points of application	Specified lubricant and/or sealant	Quantity
a	Sliding part of detent spring	Chassis grease [NLGI No. 1 (Ca soap)]	As required
	Sliding parts of shift lock actuator and arm		
	Sliding parts of spring and arm		
	Bushing		
	Detent pin of lever		
	Part of bracket that makes contact with detent pin		
	Part of sleeve that makes contact with push-button, and sliding part of sleeve		

◆Removal procedure◆

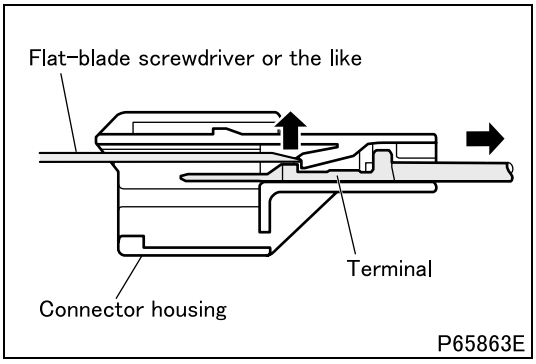

■ Removal: Connector housing

- Use a flat-blade screwdriver or the like to free the terminal in the connector, then remove the connector housing.

◆Installation procedure◆

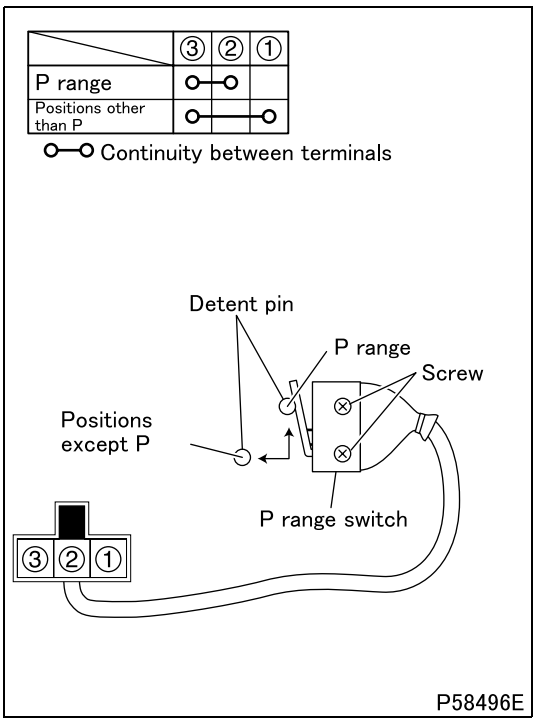

■ **Installation: P range switch**

- Tighten the screws to the specified torque with the P range switch positioned such that the continuity of the P range switch is as shown in the illustration.

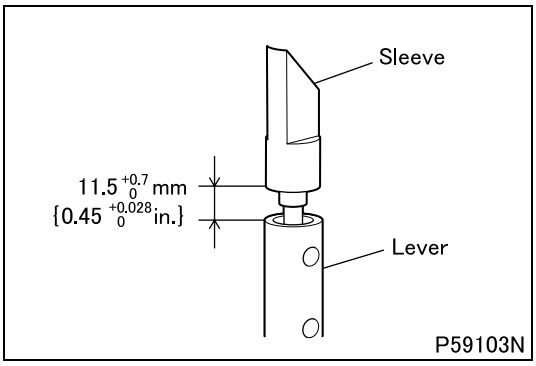

■ **Installation: Sleeve**

- Turn the sleeve to install it such that the dimension between the sleeve and the end of the lever is as shown in the illustration when the lever is in the R position.
- Install the sleeve with its tapered part on the same side as the push-button.

M E M O

OIL COOLER <EXCEPT CREW CAB>

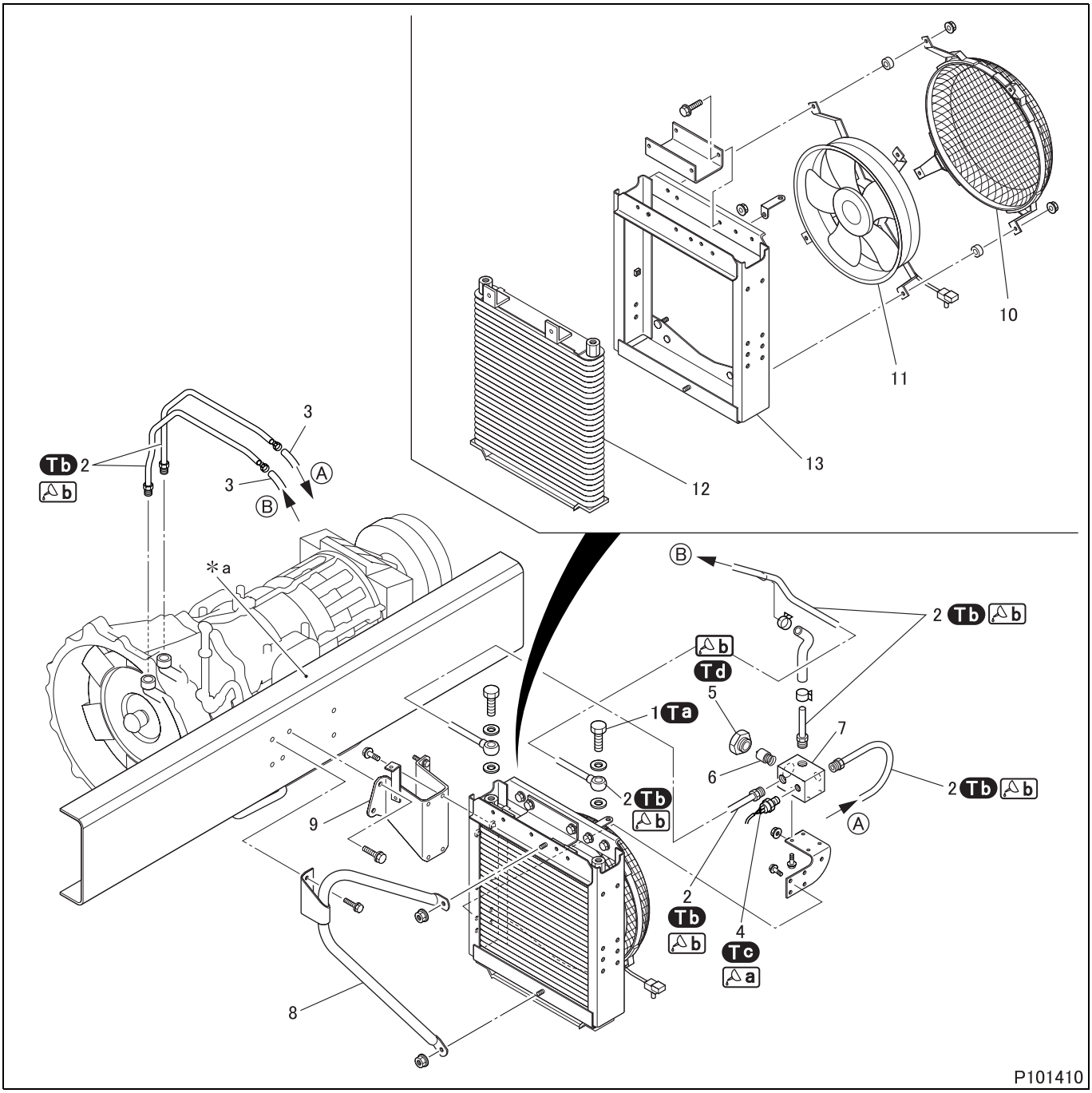

● **Removal sequence**

1 Eyebolt
2 Oil cooler tube
3 Oil cooler hose
4 ATF thermo switch
5 Plug
6 Thermo valve
7 Connector
8 Oil cooler stay
9 Oil cooler bracket
10 Fan cover
11 ATF cooler fan motor
12 Oil cooler
13 Oil cooler mount

***a**: Frame

● **Installation sequence**

Perform installation by following the removal sequence in reverse.

Tightening torque (Unit: N·m {ft.lbs, kgf·m})

Mark	Parts to be tightened	Tightening torque	Remarks
Ta	Eyebolt	29 to 34 {21 to 25, 3.0 to 3.5}	–
Tb	Oil cooler tube (flare nut)	53 {39, 5.4}	Wet
Tc	ATF thermo switch	29 to 39 {21 to 29, 3.0 to 4.0}	Sealant
Td	Plug	167 ± 20 {125 ± 15, 17 ± 2.0}	Wet

Lubricant and/or sealant

Mark	Points of application	Specified lubricant and/or sealant	Quantity
a	Thread of ATF thermo switch	ThreeBond 1110B	As required
b	Thread of oil cooler tube	Mobil ATF3309 or equivalent	As required
	Thread of plug		

◆Work before installation◆

■ Flushing: Oil cooler circuit

- If the oil cooler circuit contains a large amount of impurities, flush the cooler circuit.
- Remove the cooler tubes from the automatic transmission and oil cooler.
- Blow compressed air into the oil cooler and cooler tubes to clean them.

◆Inspection after installation◆

■ Inspection: Automatic transmission fluid level

- After oil line is removed, check the automatic transmission fluid level and replenish the fluid if necessary.

◆Installation procedure◆

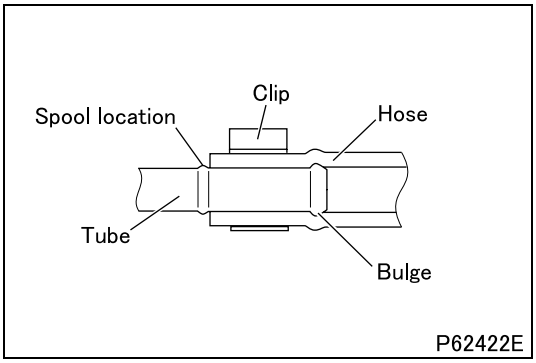

■ Installation: Oil cooler hose

- Fit the oil cooler hose all the way to the spool at the end or the oil cooler tube.
- Fasten the hose with the clip avoiding the bulge.

CAUTION ⚠

- **Install the oil cooler hose without forced bend and twist.**
- **When installing the oil cooler hose, do not apply oil to its joints.**

OIL COOLER <CREW CAB>

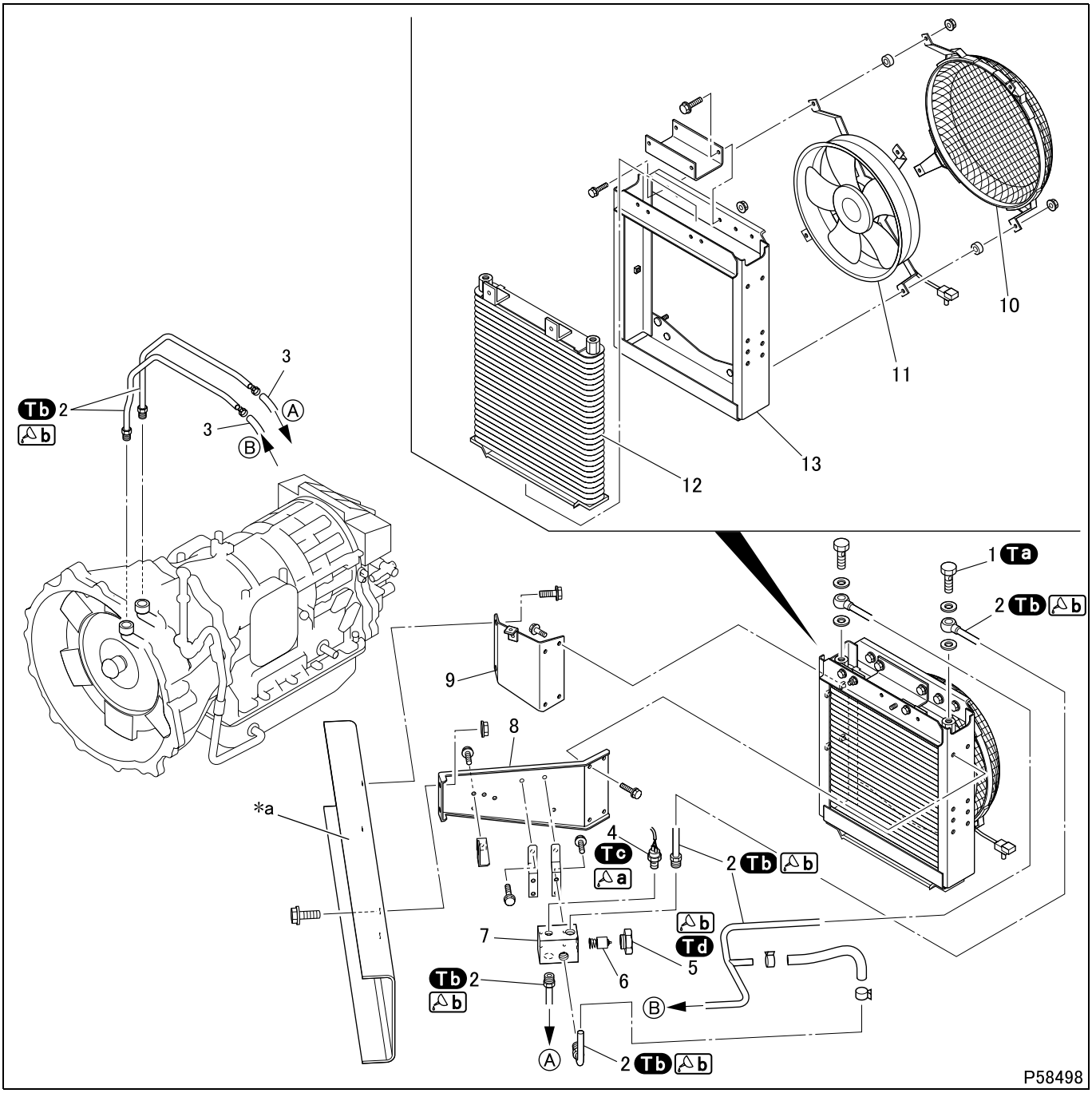

● **Removal sequence**

1 Eyebolt
2 Oil cooler tube
3 Oil cooler hose
4 ATF thermo switch
5 Plug
6 Thermo valve
7 Connector
8 Oil cooler front support
9 Oil cooler rear support
10 Fan cover
11 ATF cooler fan motor
12 Oil cooler
13 Oil cooler mount

***a**: Frame

● **Installation sequence**

Perform installation by following the removal sequence in reverse.

Tightening torque (Unit: N·m {ft.lbs, kgf·m})

Mark	Parts to be tightened	Tightening torque	Remarks
Ta	Eyebolt	29 to 34 {21 to 25, 3.0 to 3.5}	–
Tb	Oil cooler tube (flare nut)	53 {39, 5.4}	Wet
Tc	ATF thermo switch	29 to 39 {21 to 29, 3.0 to 4.0}	Sealant
Td	Plug	167 ± 20 {125 ± 15, 17 ± 2.0}	Wet

Lubricant and/or sealant

Mark	Points of application	Specified lubricant and/or sealant	Quantity
a	Thread of ATF thermo switch	ThreeBond 1110B	As required
b	Thread of oil cooler tube	Mobil ATF3309 or equivalent	As required
	Thread of plug		

◆Work before installation◆

■ Flushing: Oil cooler circuit

- If the oil cooler circuit contains a large amount of impurities, flush the cooler circuit.
- Remove the cooler tubes from the automatic transmission and oil cooler.
- Blow compressed air into the oil cooler and cooler tubes to clean them.

◆Inspection after installation◆

■ Inspection: Automatic transmission fluid level

- After oil line is removed, check the automatic transmission fluid level and replenish the fluid if necessary.

◆Installation procedure◆

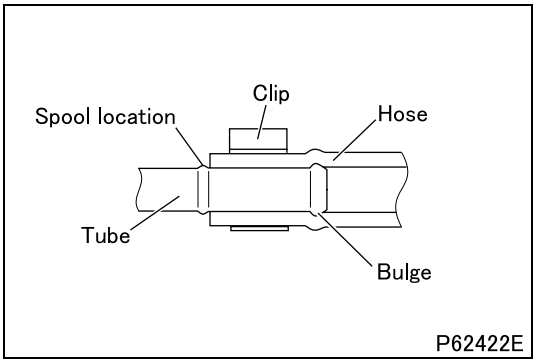

■ Installation: Oil cooler hose

- Fit the oil cooler hose all the way to the spool at the end or the oil cooler tube.
- Fasten the hose with the clip avoiding the bulge.

CAUTION ⚠

- **Install the oil cooler hose without forced bend and twist.**
- **When installing the oil cooler hose, do not apply oil to its joints.**

REPLACEMENT OF PARTS OF AUTOMATIC TRANSMISSION MAIN BODY

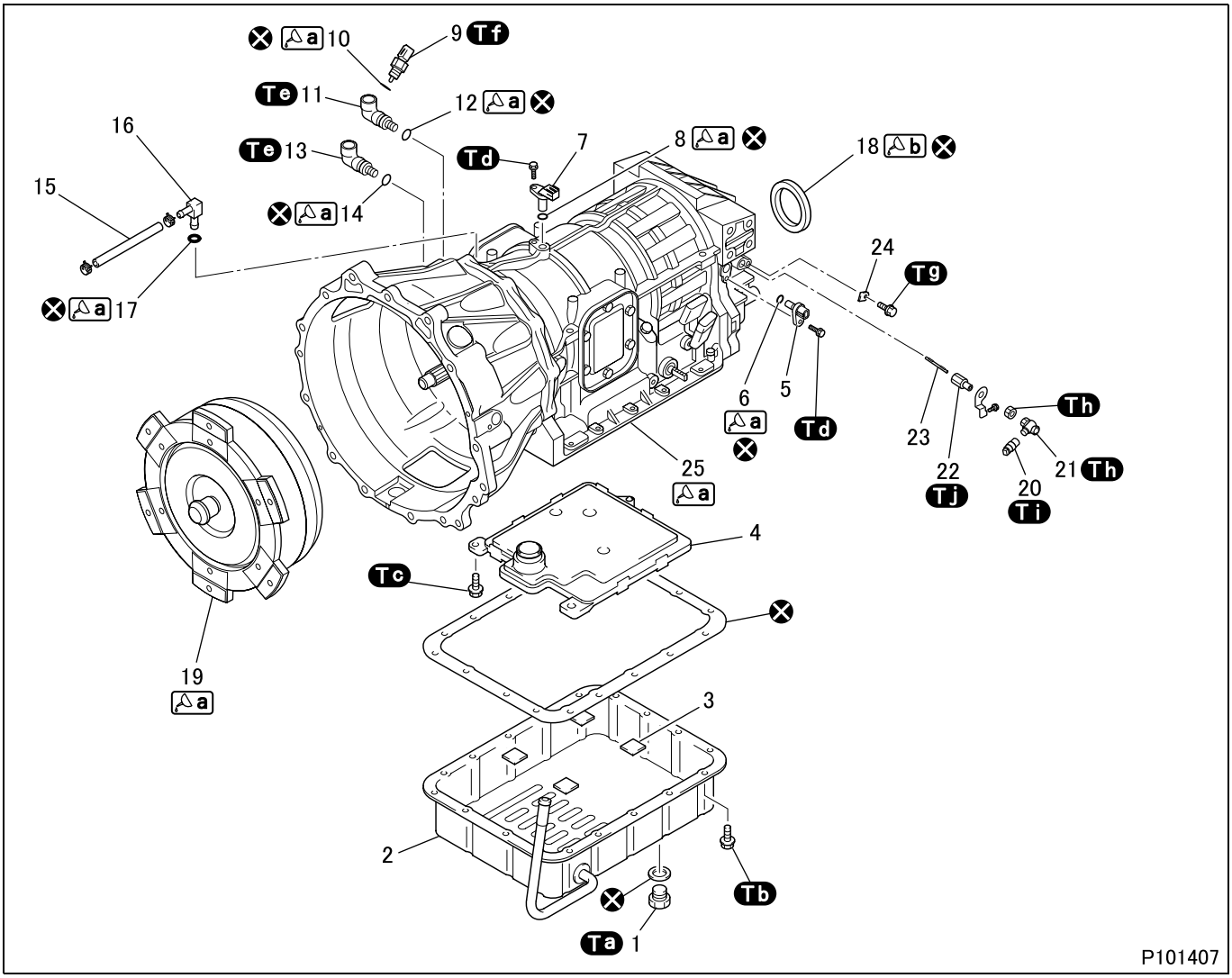

● Removal sequence

1 Drain plug
2 Oil pan
3 Oil cleaner magnet
4 Oil strainer
5 Output speed sensor
6 O-ring
7 Turbine speed sensor
8 O-ring
9 Oil temperature sensor (outside)
10 O-ring
11 Elbow
12 O-ring
13 Elbow
14 O-ring
15 Hose
16 Breather plug
17 O-ring
18 Rear oil seal
19 Torque converter
20 Vehicle speed sensor
21 L-joint
22 Speedometer joint
23 Speedometer shaft
24 Lock plate
25 Automatic transmission

⊗: Non-reusable parts

● Installation sequence

Perform installation by following the removal sequence in reverse.

Tightening torque (Unit: N·m {ft.lbs, kgf·m})

Mark	Parts to be tightened	Tightening torque	Remarks
Ta	Drain plug	27 {20, 2.8}	Magnet attached
Tb	Bolt (oil pan mounting)	7 {5.2, 0.7}	–
Tc	Bolt (oil strainer mounting)	10 {7.4, 1.0}	–
Td	Bolt (output speed sensor and turbine speed sensor mounting)	8 {5.9, 0.8}	–
Te	Elbow mounting	32 {24, 3.3}	–
Tf	Oil temperature sensor (outside) mounting	34 {25, 3.5}	–
Tg	Bolt (lock plate mounting)	12.5 {9.2, 1.3}	–
Th	L-joint	34 to 39 {25 to 29, 3.5 to 4.0}	–
	Nut (speedometer joint mounting)		
Ti	Vehicle speed sensor	14.7 to 29.4 {11 to 22, 1.5 to 3.0}	–
Tj	Speedometer joint	20 to 30 {15 to 22, 2.0 to 3.1}	–

Lubricant and/or sealant

Mark	Points of application	Specified lubricant and/or sealant	Quantity
a	O-ring	Mobil ATF3309 or equivalent	As required
	Torque converter		2 L {2.1 qts}
	Front oil seal (automatic transmission)		As required
b	Rear oil seal lips	Wheel bearing grease [NLGI No. 2 (Li soap)]	As required

Special tools

Mark	Tool name and shape	Part No.	Application
a	Oil pan remover 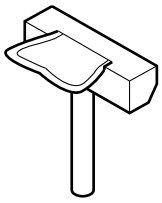 P29856	MD998727	Removal of oil pan
b	Oil seal installer A: ϕ66, B: ϕ53, C: 17 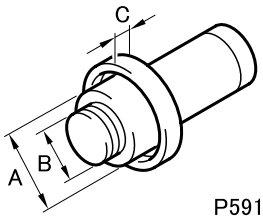 P59105	MH063641	Installing rear oil seal

◆Removal procedure◆

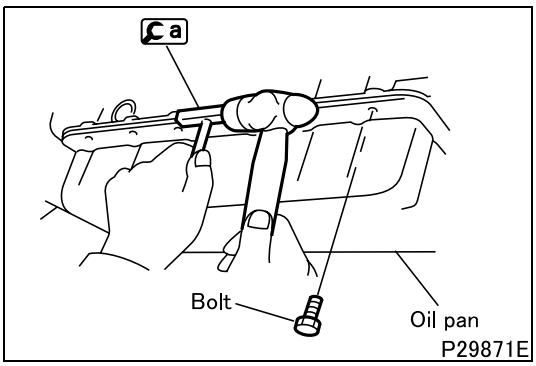

■ **Removal: Oil pan**

- Remove the bolts, leaving one bolt (not tightened) in every third hole to prevent the oil pan from falling.
- Remove the oil pan using the special tool a as illustrated. Insert the special tool at one corner of the oil pan.

CAUTION ⚠

- **Do not deform the oil pan when tapping in the special tool a.**
- **Oil remains in the oil pan. Do not tip the oil pan when removing it.**

◆Installation procedure◆

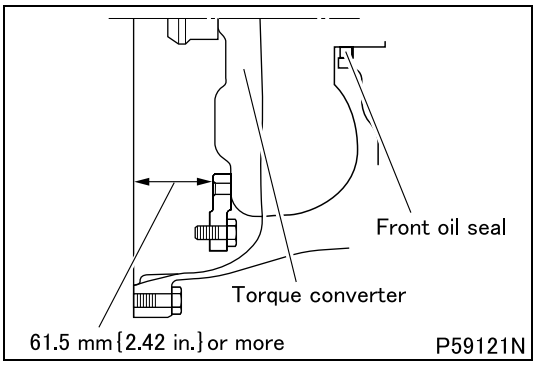

■ **Installation: Torque converter**

- If the torque converter is replaced and the replacement is new, fill it with fresh automatic transmission fluid up to the specified level.
- Apply automatic transmission fluid to the front oil seal, then install the torque converter on the oil pump.

CAUTION ⚠

- **Do not damage the oil seal when installing the torque converter.**

- Measure the dimension from the torque converter housing to the torque converter's set block. Confirm that the torque converter is correctly positioned.

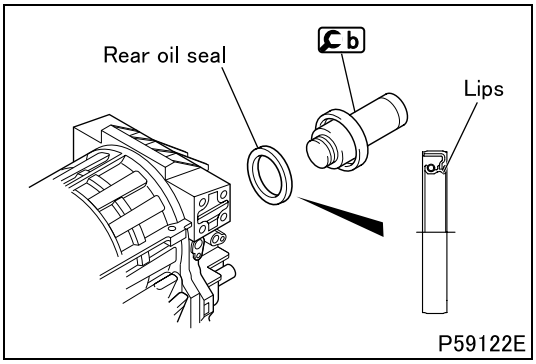

■ **Installation: Rear oil seal**

NOTE

- **Before installing the rear oil seal, ensure that the seal mounting face on the automatic transmission is clean.**

- Apply grease to the rear oil seal lips.
- Install the rear oil seal using b. Ensure that the seal is firmly against the extension housing end face of the automatic transmission main body.

CAUTION ⚠

- **Install the rear oil seal evenly throughout its periphery.**
- **Be careful not to deform or otherwise damage the rear oil seal.**

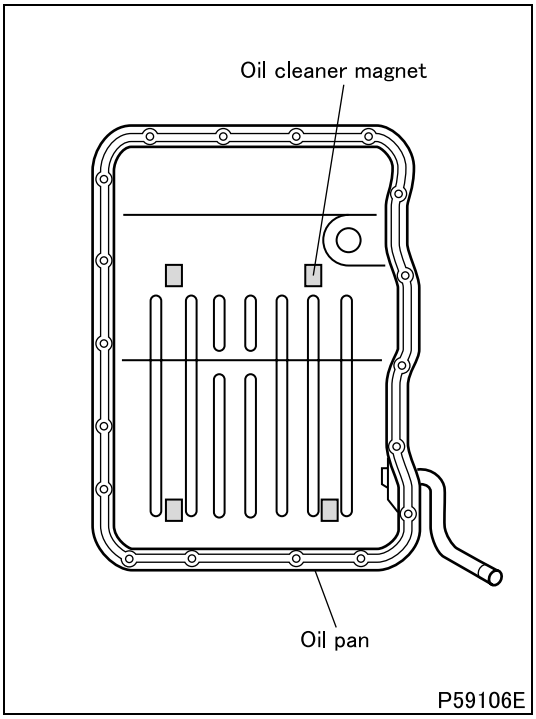

■ **Installation: Oil pan**

- Remove any gasket that may be remaining on the mating faces of the automatic transmission main body and the oil pan.
- Clean the oil cleaner magnet and install it onto the oil pan.
- Install new gasket onto the oil pan, then install them onto the automatic transmission main body.
- Tighten the bolts evenly in several steps, in each step tightening individual bolts a little in a set sequence to the specified torque.

CAUTION ⚠

- **Ensure that the mating faces of the oil pan and the automatic transmission main body are free from automatic transmission fluid spill.**
- **After installing the oil pan, do not operate the automatic transmission for at least one hour.**

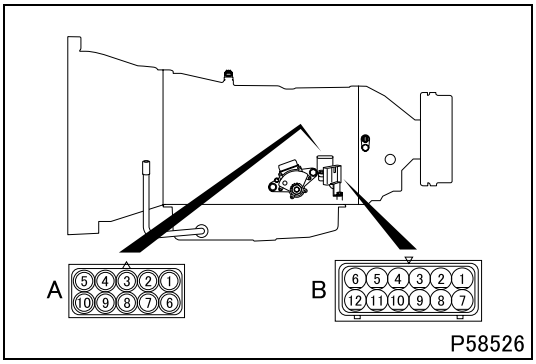

#140 Inspection of oil pressure switch

- Measure the resistance between the indicated terminals.

Standard value	Oil pressure switch 1	B1-*	No continuity (When starter switch is OFF)
	Oil pressure switch 2	B7-*	
	Oil pressure switch 3	B8-*	
	Oil pressure switch 4	A7-*	
	Oil pressure switch 5	A2-*	
	Oil pressure switch 6	B2-*	
	Oil pressure switch 7	A1-*	
	Oil pressure switch 8	A6-*	

*: Automatic transmission case

- If any measured value is out of specification, replace automatic transmission.

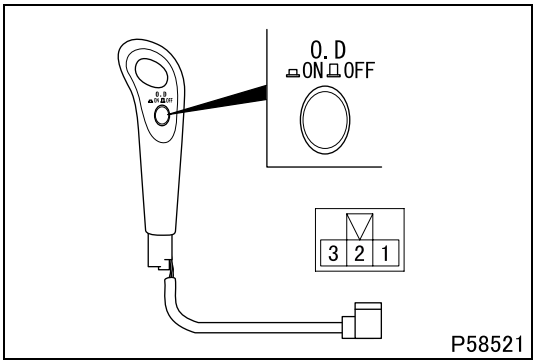

#150 Inspection of overdrive switch

Switch position	Terminals with continuity
OFF	1-3
ON	2-3

- If there is any abnormality, replace the knob.

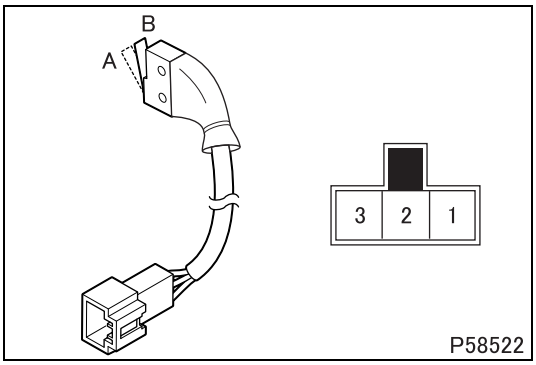

#151 Inspection of P range switch

Switch position	Terminals with continuity
A	1-3
B	2-3

- If there is any abnormality, replace the P range switch.

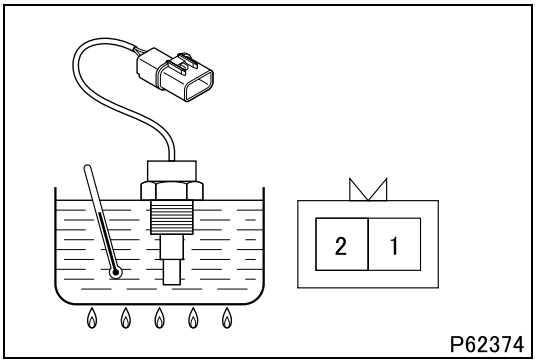

#153 Inspection of ATF thermo switch

- Place the ATF thermo switch in a container filled with automatic transmission fluid and use a heater to raise the temperature of the fluid.
- Measure the temperature of the fluid at which continuity becomes established between terminals 1 and 2 and check that the measurement is within the standard value range.

Standard value (OFF to ON temperature)	97 ± 3°C {205 ± 5.4°F}

- Measure the temperature of the fluid at which the continuity between terminals 1 and 2 is lost and check that the measurement is within the standard value range.

Standard value (ON to OFF temperature)	90°C {195°F} or higher

- If any of the above measurements is not within the standard value range, replace the ATF thermo switch.

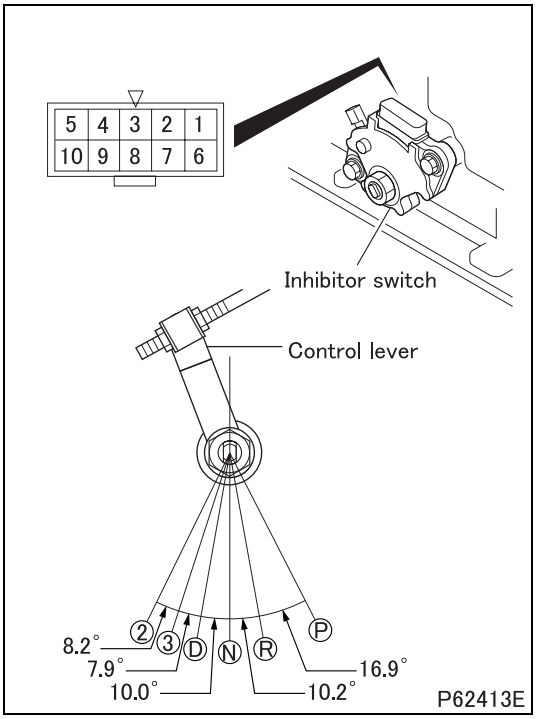

#159 Inspection of Inhibitor switch

- After installing the inhibitor switch to the automatic transmission and connecting the control lever, check the continuity in the following conditions.

Transmission control lever position	Terminals with continuity
P	4-5, 6-10
R	4-9
N	1-4, 6-10
D	4-8
3	2-4
2	4-7

- If there is any abnormality, replace the inhibitor switch.

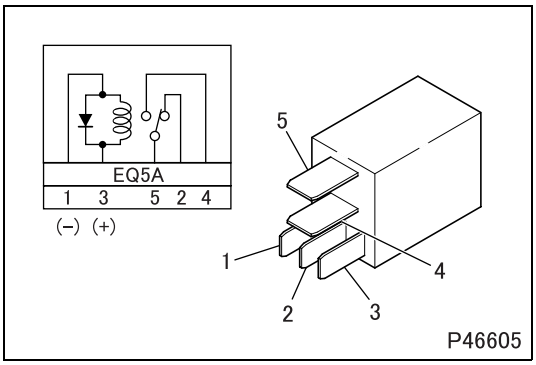

#201 Inspection of relay (normally open, 5-pin type)

- Perform a continuity check and an operation check. If there is any abnormality, replace the relay.

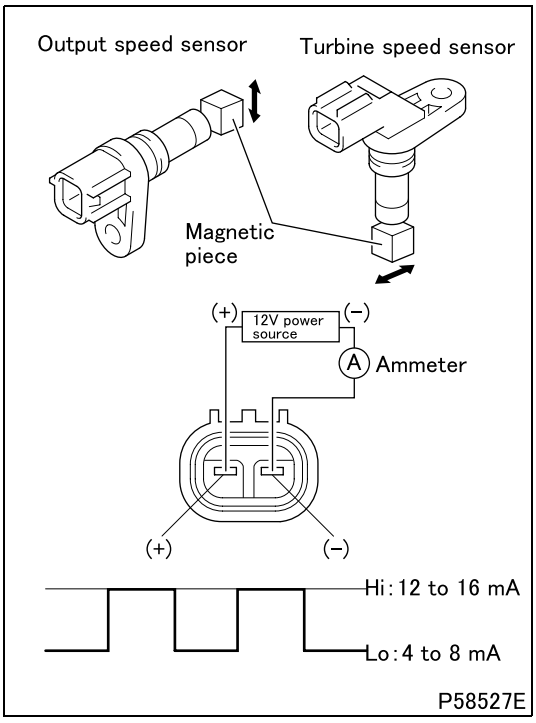

#293 Inspection of speed sensors

- Connect the speed sensor to the power source and an ammeter as illustrated.
- While moving a magnetic piece (metal that attaches to magnet) in the illustrated directions near the end of the speed sensor, read the ammeter. (Distance between sensor and magnetic piece: 5 mm {0.20 in.} or less)

Standard value (at normal temperature)	Hi	12 to 16 mA
	Lo	4 to 8 mA

- If the measured value does not conform to the standard value, replace the speed sensor.

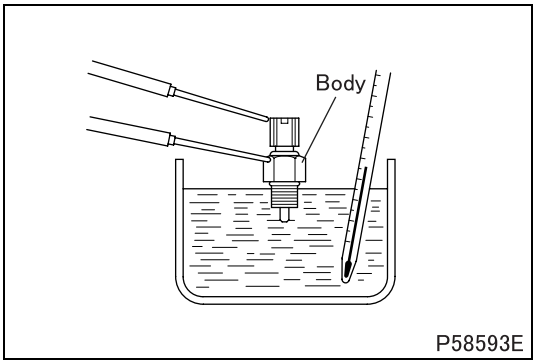

#312 Inspection of oil temperature sensor

<Outside>

- Immerse the oil temperature sensor in a container filled with automatic transmission fluid.
- Measure the resistance at the temperatures listed below. (To obtain the correct reading, the sensor needs to be exposed to the specified temperature for at least 5 minutes.)

Standard value	115°C {240°F}	655 to 730 Ω
	120°C {250°F}	585 to 645 Ω
	145°C {295°F}	340 to 375 Ω
	155°C {310°F}	280 to 305 Ω

- If there is any abnormality, replace the oil temperature sensor.

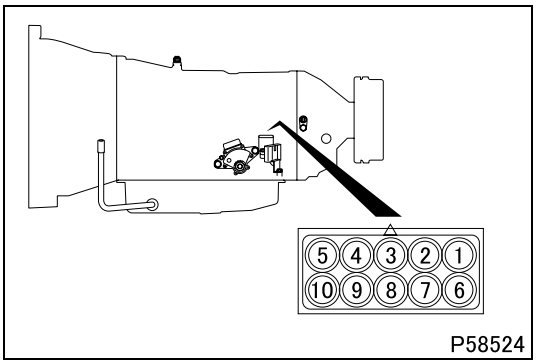

<Inside>

- Measure the resistance between terminals 3 and 8 on the automatic transmission.

Standard value	–30°C {–22°F}	44 ± 6.6 kΩ
	10°C {50°F}	6445 ± 645 Ω
	110°C {230°F}	247 ± 16 Ω
	145°C {295°F}	111 ± 6 Ω

- If a measured value differs greatly from the standard value or the resistance does not change when the temperature is changed, replace automatic transmission.

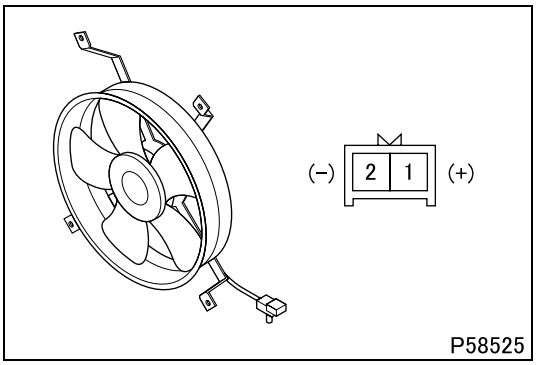

#489 Inspection of ATF cooler fan motor

- Check that the ATF cooler fan motor runs when the battery voltage is applied to terminals 1 and 2.
- If there is any abnormality, replace the ATF cooler fan motor.

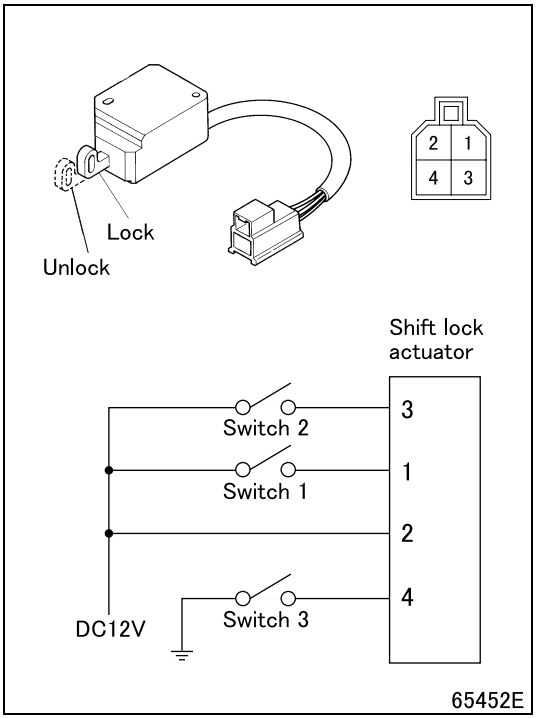

#535 Inspection of shift lock actuator

- Wire the shift lock actuator as illustrated.
- Check the lever position with each combination of switch conditions shown in the following table.

Switch 1	Switch 2	Switch 3	Lever position
ON	ON	ON	Unlock
ON	OFF	ON	Lock
ON	ON	OFF	Unlock
ON	OFF	OFF	Unlock
OFF	ON	ON	Lock
OFF	OFF	ON	Lock
OFF	ON	OFF	Unlock
OFF	OFF	OFF	Unlock

- If there is any abnormality, replace the shift lock actuator.

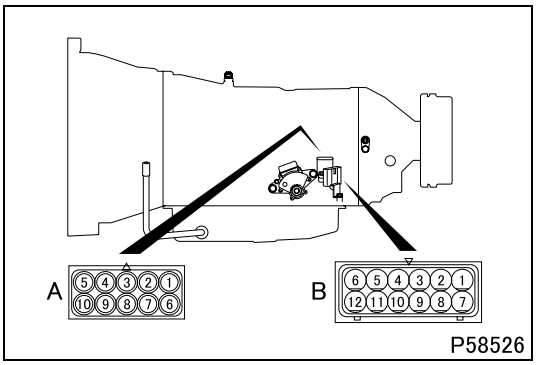

#585 Inspection of solenoids

- Measure the resistance between the indicated terminals.

Standard value (at normal temperature)	Shift solenoid 1	B10-*	13 ± 2 Ω
	Shift solenoid 2	B3-*	
	Shift solenoid 3	B9-*	
	Gain change solenoid	B4-*	
	Linear solenoid 1	A5-A10	5.5 ± 0.5 Ω
	Linear solenoid 2	B6-B12	
	Linear solenoid 3	A4-A9	
	PL linear solenoid	B5-B11	

*: Automatic transmission case

- If any measured value is out of specification, replace automatic transmission.

INSTALLED LOCATIONS OF PARTS

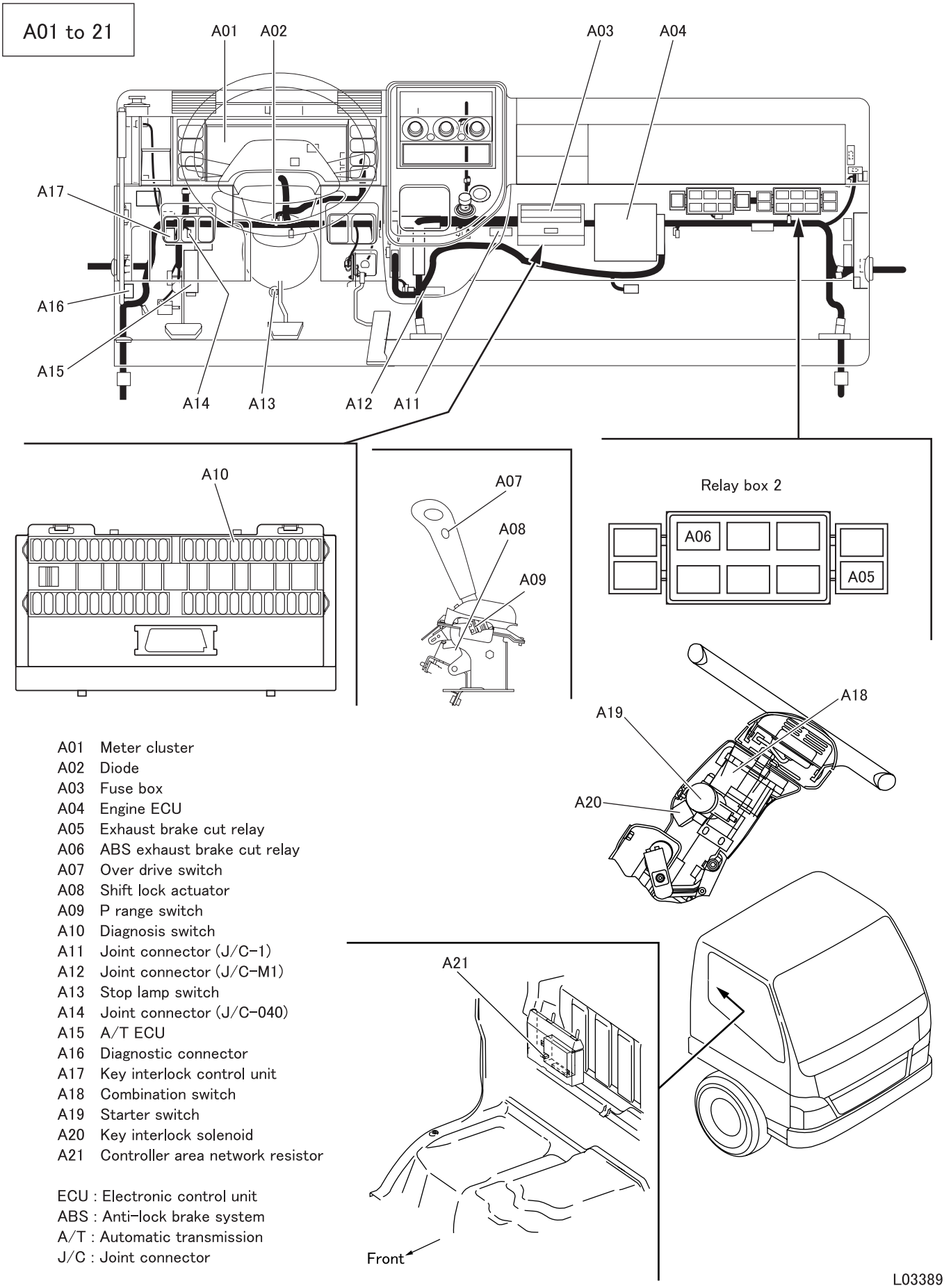

A01 Meter cluster
A02 Diode
A03 Fuse box
A04 Engine ECU
A05 Exhaust brake cut relay
A06 ABS exhaust brake cut relay
A07 Over drive switch
A08 Shift lock actuator
A09 P range switch
A10 Diagnosis switch
A11 Joint connector (J/C-1)
A12 Joint connector (J/C-M1)
A13 Stop lamp switch
A14 Joint connector (J/C-040)
A15 A/T ECU
A16 Diagnostic connector
A17 Key interlock control unit
A18 Combination switch
A19 Starter switch
A20 Key interlock solenoid
A21 Controller area network resistor

ECU : Electronic control unit
ABS : Anti-lock brake system
A/T : Automatic transmission
J/C : Joint connector

B01 to 19

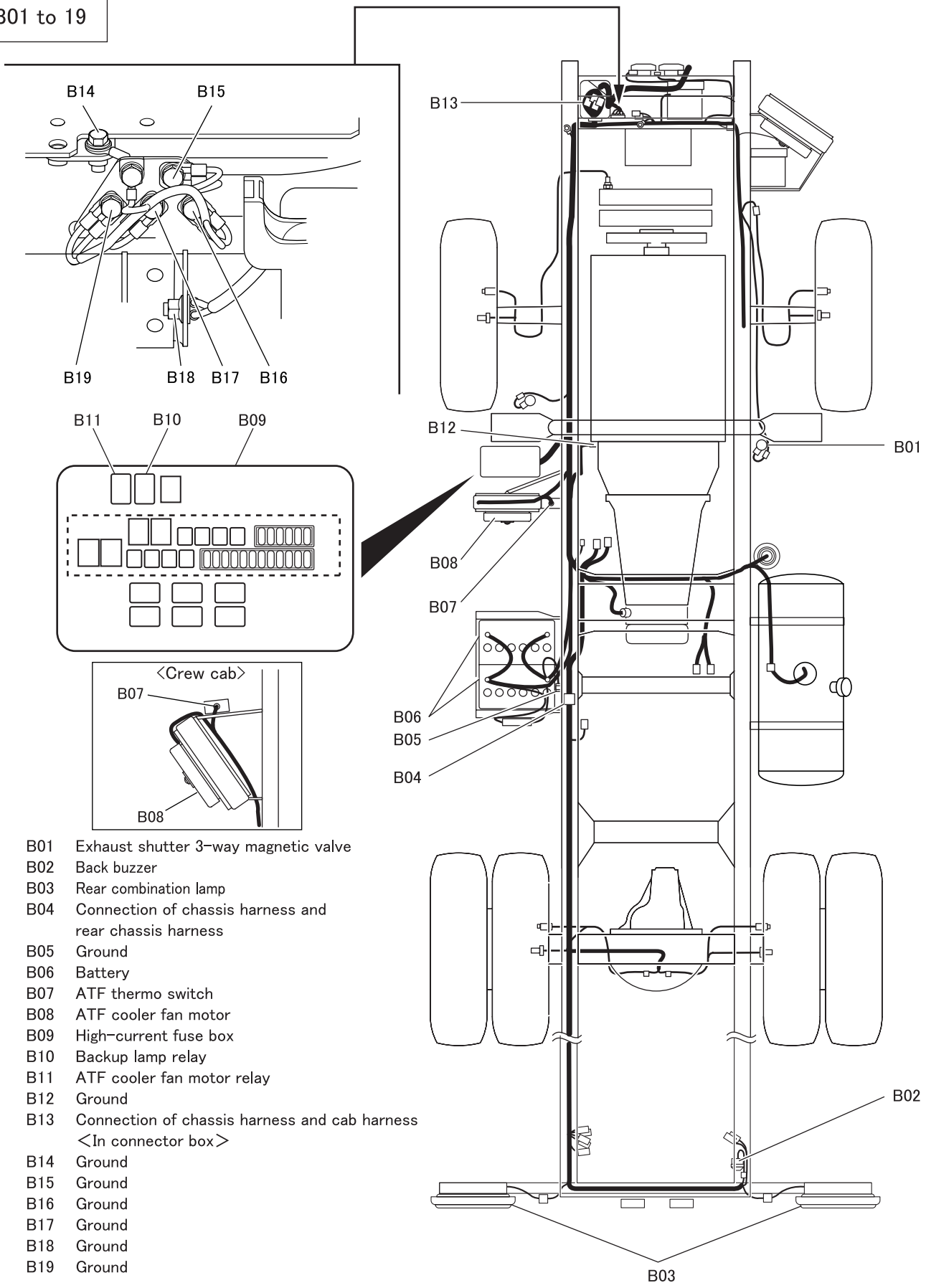

B01 Exhaust shutter 3-way magnetic valve
B02 Back buzzer
B03 Rear combination lamp
B04 Connection of chassis harness and rear chassis harness
B05 Ground
B06 Battery
B07 ATF thermo switch
B08 ATF cooler fan motor
B09 High-current fuse box
B10 Backup lamp relay
B11 ATF cooler fan motor relay
B12 Ground
B13 Connection of chassis harness and cab harness <In connector box>
B14 Ground
B15 Ground
B16 Ground
B17 Ground
B18 Ground
B19 Ground

ATF : Automatic transmission fluid

L03390

INSTALLED LOCATIONS OF PARTS

C01 to 07

Left side view

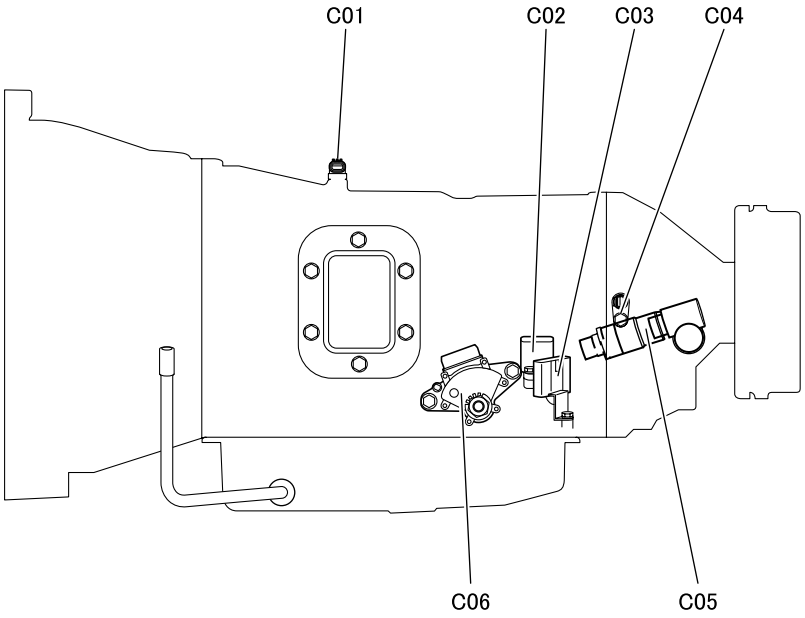

Right side view

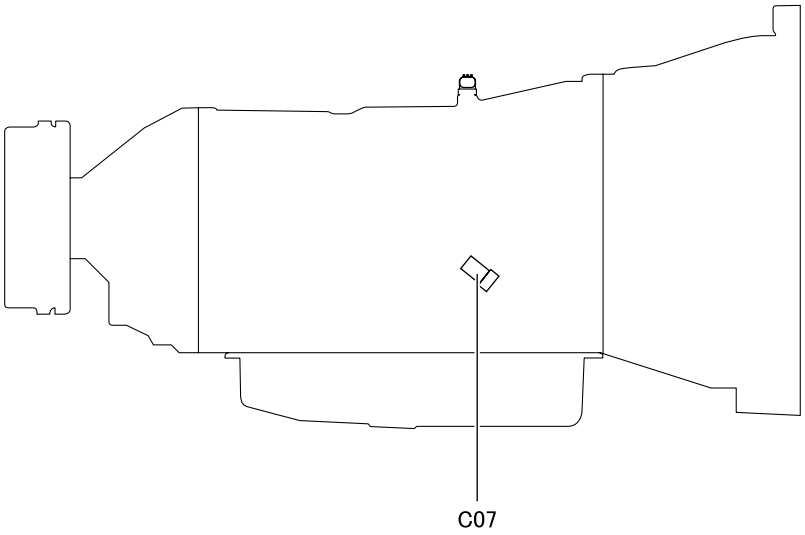

C01 Turbine speed sensor
C02 Connector (Oil pressure switches, Oil temperature sensor (inside), Solenoids) [ET10A]
C03 Connector (Oil pressure switches, Solenoids) [DG12A]
C04 Output speed sensor
C05 Vehicle speed sensor
C06 Inhibitor switch
C07 Oil temperature sensor (outside)

A/T : Automatic transmission

L03391

M E M O

ELECTRICAL CIRCUIT DIAGRAM

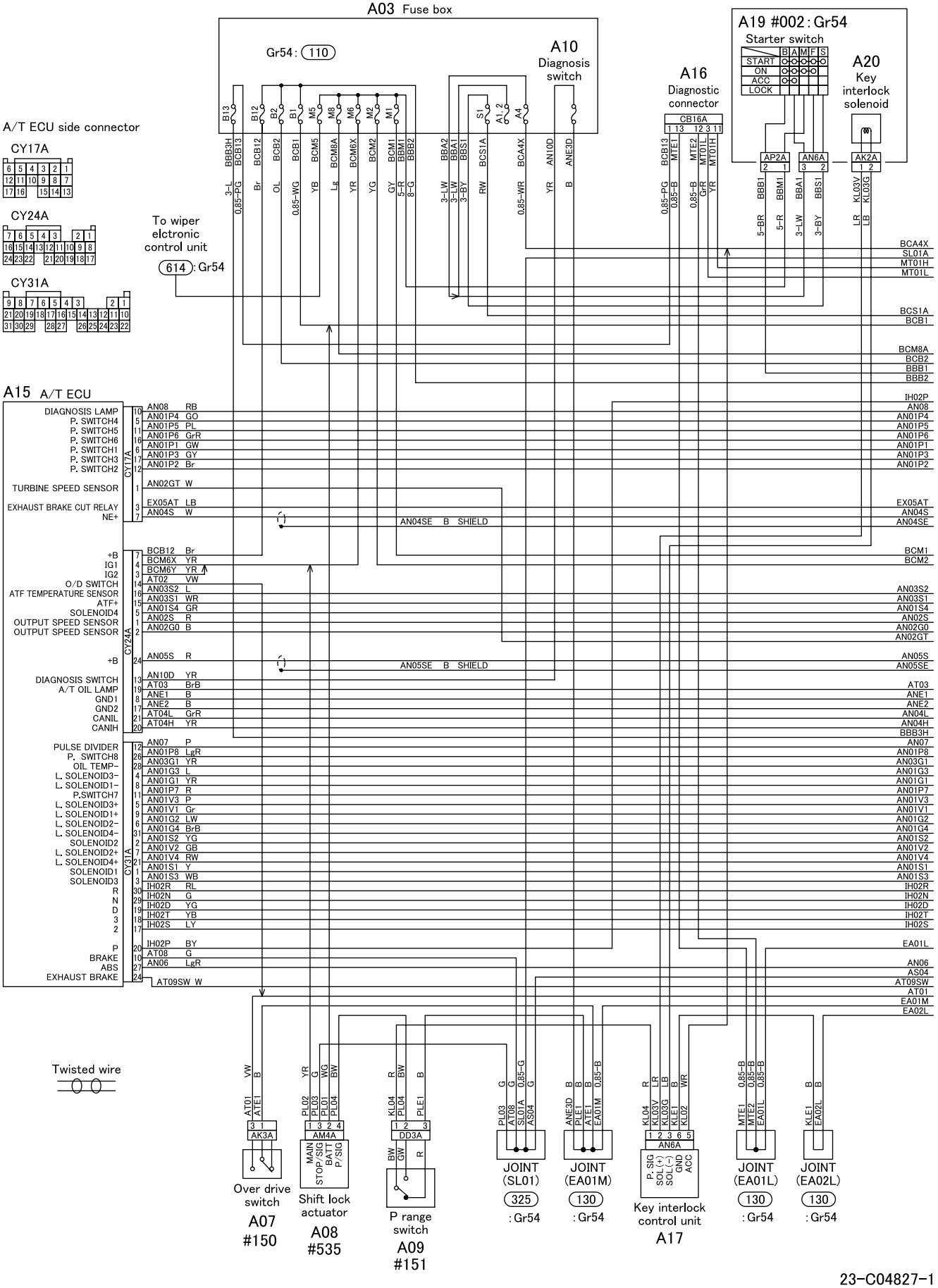

23-C04827-1

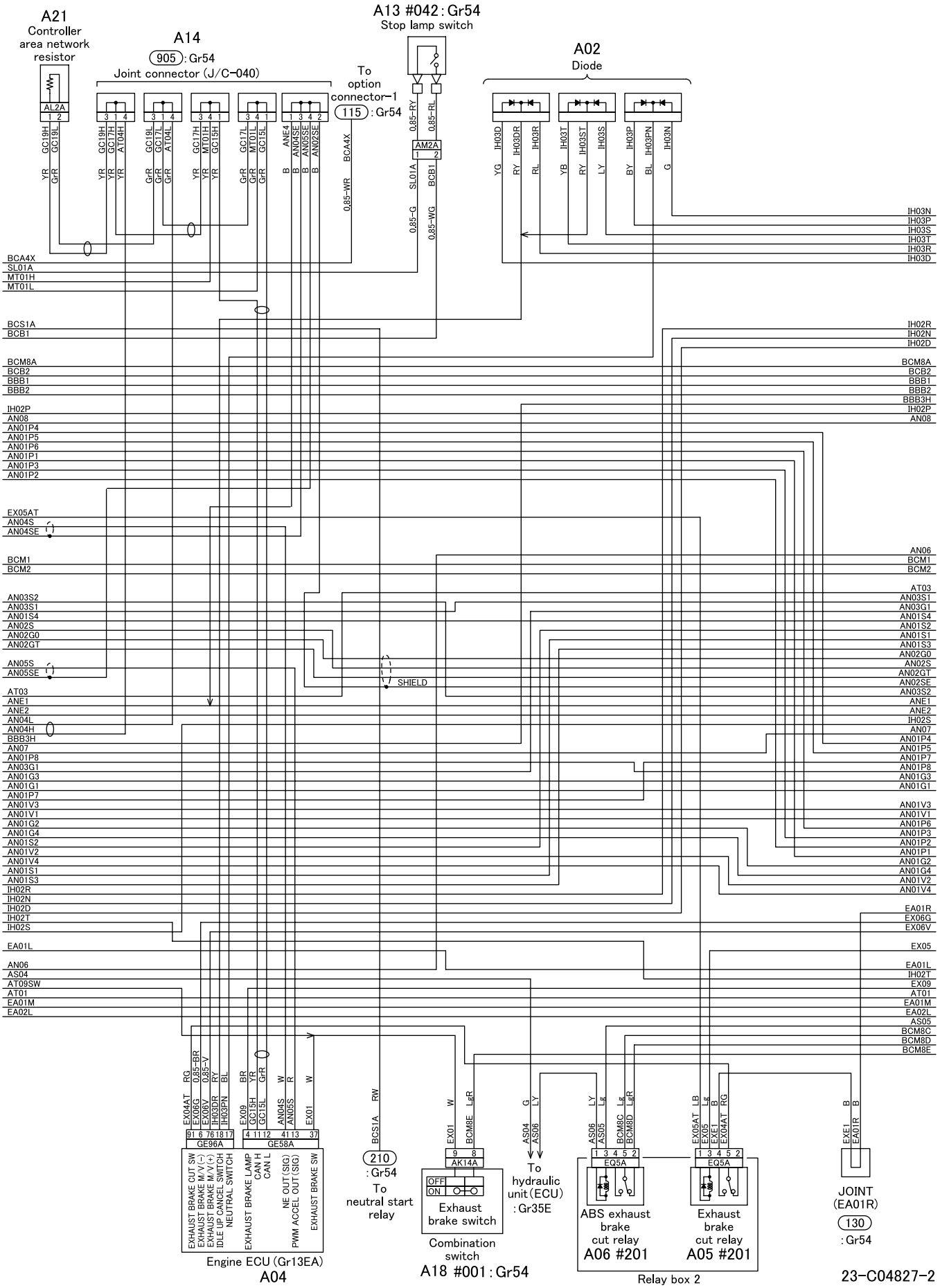
A21
Controller area network resistor
AL2A
A14
905 : Gr54
Joint connector (J/C-040)
To option connector-1
115 : Gr54
A13 #042 : Gr54
Stop lamp switch
AM2A
A02
Diode
SHIELD
210 : Gr54
To neutral start relay
Exhaust brake switch
Combination switch
A18 #001 : Gr54
To hydraulic unit (ECU) : Gr35E
ABS exhaust brake cut relay
A06 #201
Exhaust brake cut relay
A05 #201
Relay box 2
JOINT (EA01R)
130 : Gr54
Engine ECU (Gr13EA)
A04
EXHAUST BRAKE CUT SW
EXHAUST BRAKE M/V (-)
EXHAUST BRAKE M/V (+)
IDLE UP CANCEL SWITCH
NEUTRAL SWITCH
EXHAUST BRAKE LAMP
CAN H
CAN L
NE OUT (SIG)
PWM ACCEL OUT (SIG)
EXHAUST BRAKE SW

23-C04827-2

ELECTRICAL CIRCUIT DIAGRAM

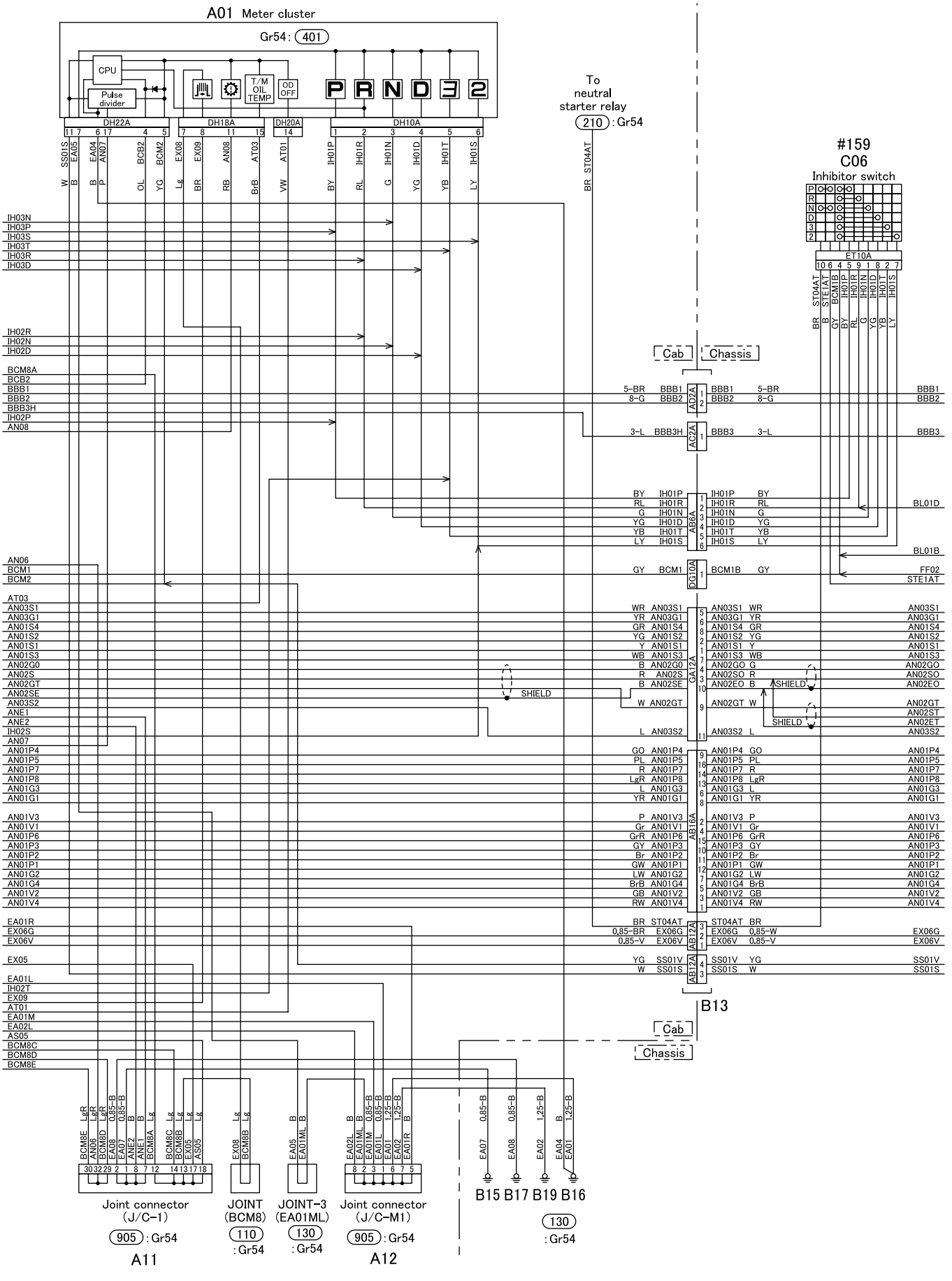

23-C04827-3

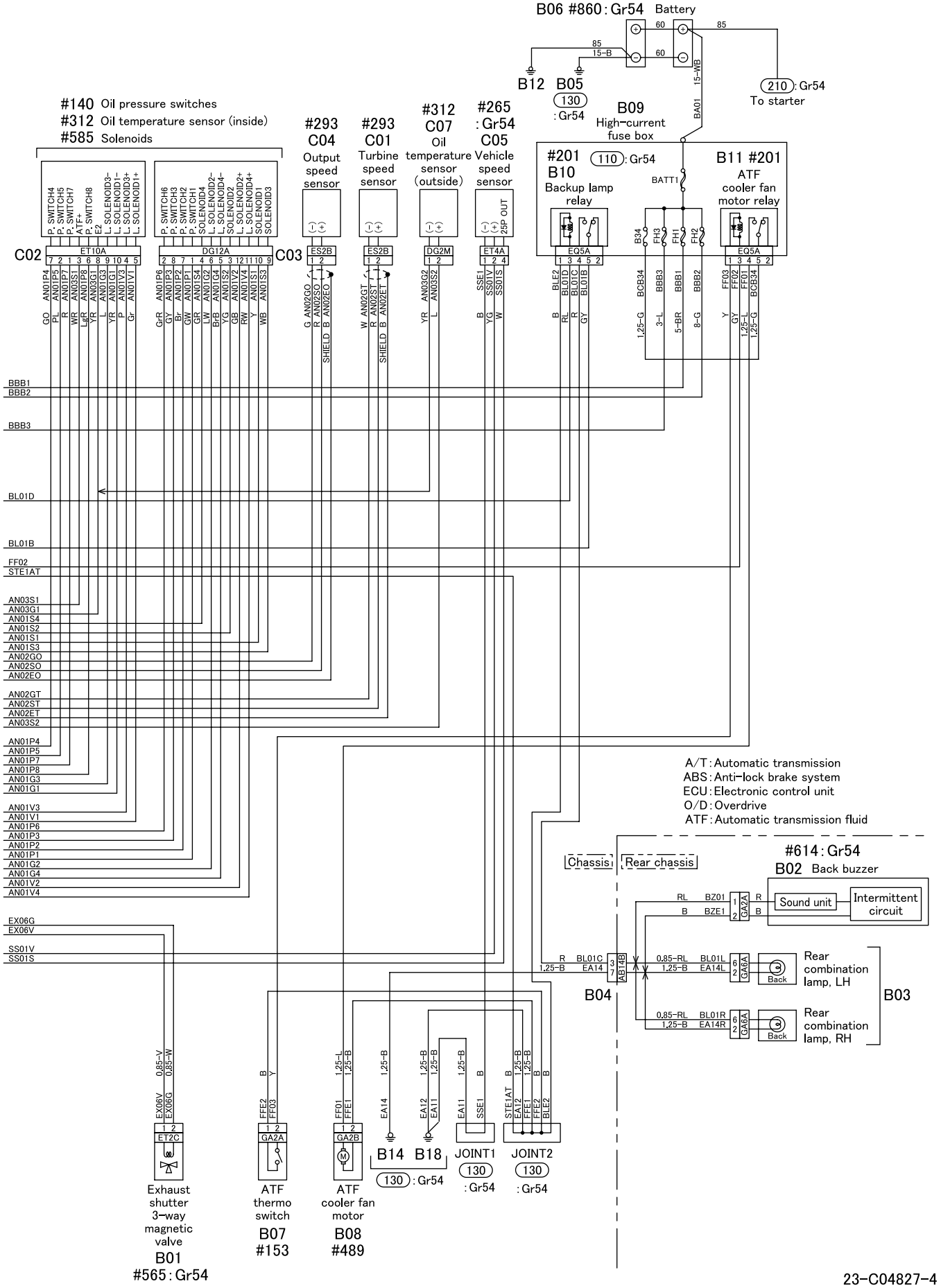
B06 #860 : Gr54 Battery
B12 B05
130 : Gr54
B09 High-current fuse box
210 : Gr54
To starter
#140 Oil pressure switches
#312 Oil temperature sensor (inside)
#585 Solenoids
#293 C04 Output speed sensor
#293 C01 Turbine speed sensor
#312 C07 Oil temperature sensor (outside)
#265 : Gr54 C05 Vehicle speed sensor
#201 B10 Backup lamp relay
110 : Gr54
B11 #201 ATF cooler fan motor relay
C02
C03
ET10A
DG12A
ES2B
DG2M
ET4A
EQ5A
A/T : Automatic transmission
ABS : Anti-lock brake system
ECU : Electronic control unit
O/D : Overdrive
ATF : Automatic transmission fluid
#614 : Gr54
B02 Back buzzer
Sound unit
Intermittent circuit
Chassis
Rear chassis
B04
B03
Rear combination lamp, LH
Rear combination lamp, RH
Back
Exhaust shutter 3-way magnetic valve
B01
#565 : Gr54
ATF thermo switch
B07
#153
ATF cooler fan motor
B08
#489
B14 B18
JOINT1
JOINT2
130 : Gr54

23-C04827-4

Group 24

Transfer

Table of Contents

Back

Home

MITSUBISHI FUSO TRUCK OF AMERICA, Inc.

Pub.No.TWSE0713-24

INDEX

SPECIFICATIONS 24-2

STRUCTURE AND OPERATION
1. Transfer 24-3
2. Speedometer Gear Bushing 24-4

TROUBLESHOOTING 24-5

ON-VEHICLE INSPECTION AND ADJUSTMENT
1. Inspection of Looseness in Transmission and Transfer Mounting Bolts 24-6
2. Inspection of Play and Looseness in Companion Flange 24-6
3. Inspection and Replacement of Transfer Oil 24-7

REMOVAL AND INSTALLATION OF TRANSMISSION (WITH TRANSFER) 24-8

REMOVAL AND INSTALLATION OF TRANSFER 24-12

FRONT DRIVE 24-14

REAR DRIVE 24-20

TRANSFER 24-26

TRANSFER CONTROL (HIGH-LOW SWITCHING) 24-34

SPECIFICATIONS

Item		Specifications
Model		TF3
Transfer type		Part-time
Drive type		Gear
Gear ratio	High	1.090
	Low	1.987
Transfer oil	Gear oil	General: API GL-3 SAE 80 Warm region: API GL-3 SAE 90 Tropical region: API GL-4 SAE 90
	Oil quantity L {qts.}	3.1 {3.3}
Mass (including transmission body) kg {lb}		160 {350}
Control	Front drive switching	Electric and vacuum type
	HIGH-LOW switching	Floor change remote control type

1. Transfer

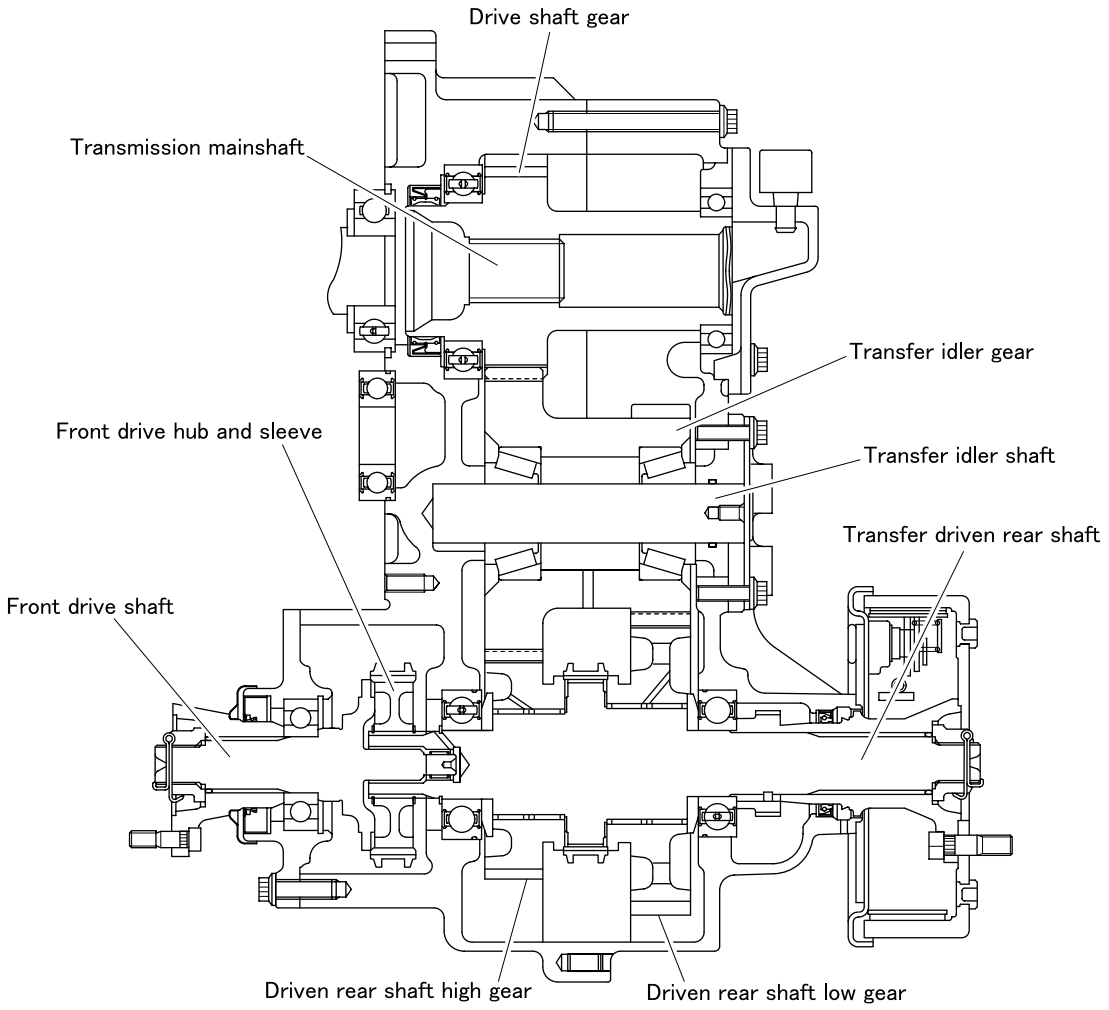

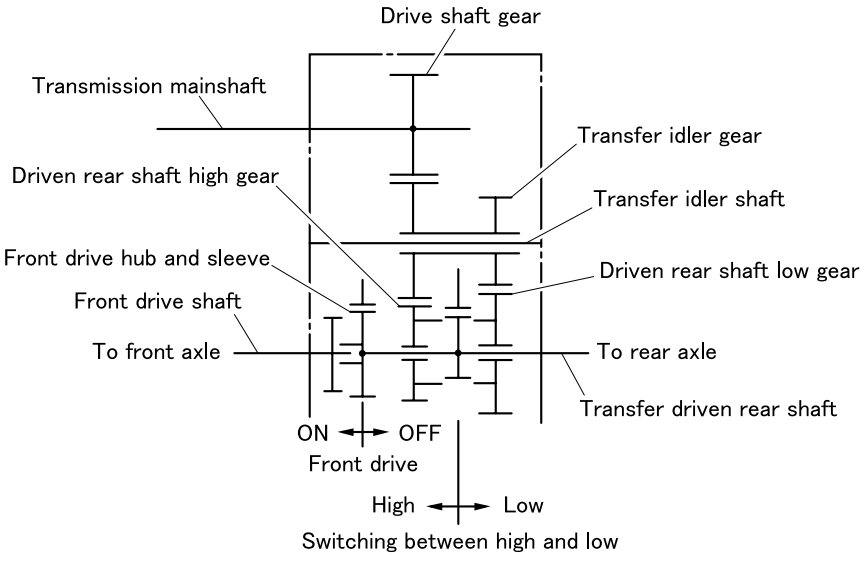

- The transfer has two functions of distribution of all-wheel drive and a sub transmission with a reduction gear.
- The transfer is of a three-shaft constant-mesh type.
- The switch of a driver seat enables switching between engagement and disengagement of the front drive.
- The transfer control lever in the cab enables switching between the high and low range.

2. Speedometer Gear Bushing

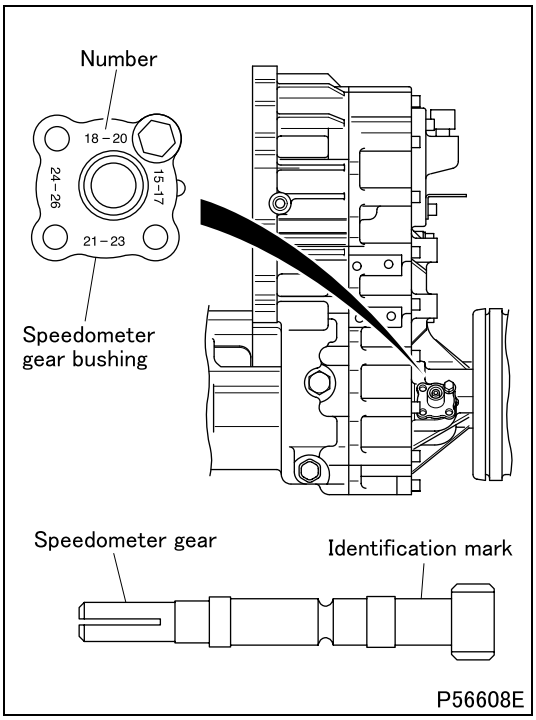

- The speedometer gear bushing is eccentric, and displacing the installed position allows it to correspond to the different number of teeth of the speedometer gear.
- The numbers marked on the front at four locations show the range of the number of teeth of the corresponding speedometer gear.
  “15-17”: Number of teeth 15 to 17.
- An identification mark showing the number of teeth is marked on the speedometer gear.

Identification mark	A	B	C	D
Number of tooth	15	16	17	18
Gear ratio	3.0	3.2	3.4	3.6

Possible causes	Symptoms	Noise when cruising	Gears cannot be engaged when switching to front drive	Gears cannot be engaged when switching between high and low gear	Gears slip out of engagement during driving with front drive engaged	Gears slip out of engagement during driving	Gears cannot be disengaged when switching to front drive	Gears cannot be disengaged when switching between high and low	Indicator does not light though front drive is engaged	Indicator does not light though low gear is engaged	Indicator lights though front drive is not engaged	Indicator lights though low gear is not engaged
Transfer body faulty	Front drive shaft and spline of constant sleeve worn				O							
	Hub and spline of high and low constant sleeve worn					O						
	Transfer idler bearing worn or damaged	O										
	Transfer drive gear bearing worn or damaged	O										
	Transfer driven rear shaft bearing worn or damaged	O										
	Transfer driven rear shaft needle bearing worn or damaged	O										
	Gears damaged	O										
	Backlash of low gear and high gear of driven shaft excessive	O										
	Transfer oil insufficient	O										
	Transfer oil viscosity inadequate	O										
	Constant sleeve and dog clutch broken		O		O							
	High and low constant sleeve and hub broken			O		O						
Control mechanism faulty	Shift rail bent		O	O								
	Shift rail sliding movement faulty		O	O								
	Shift fork bent		O	O								
	Shift fork claws worn		O	O								
	Steel ball and groove of shift rail poppet worn					O						
	Poppet spring fatigued or damaged					O						
Transfer control system faulty	Transfer low switch faulty									O		O
	Transfer four-wheel drive switch faulty								O		O	
	Blowout of fuse and high-current fuse		O						O			
	Battery overcharge		O									
	3-way magnet valve faulty		O		O		O					
	Broken wire, poor connection								O	O		
	Air leakage in vacuum piping		O		O							
	Vacuum actuator faulty		O		O		O					
	Control cable faulty			O				O				

ON-VEHICLE INSPECTION AND ADJUSTMENT

1. Inspection of Looseness in Transmission and Transfer Mounting Bolts

Tightening torque (Unit: N·m {ft.lbs, kgf·m})

Mark	Parts to be tightened		Tightening torque	Remarks
–	Bolt A (transfer mounting)		44.5 {33, 4.5}	–
–	Bolt B (transmission mounting)	M10	47.1 {35, 4.8}	–
		M12	82.4 {61, 8.4}	–

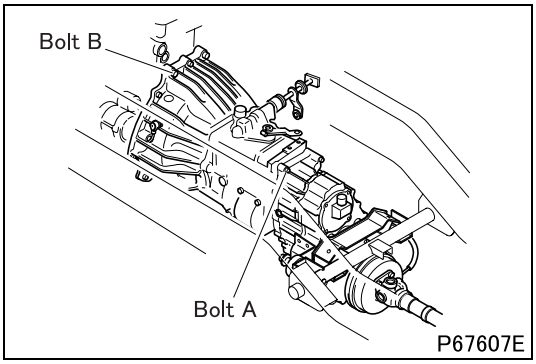

- Check the transmission and transfer mounting bolts for looseness.
- Retighten any loose bolt to the specified torque.

2. Inspection of Play and Looseness in Companion Flange

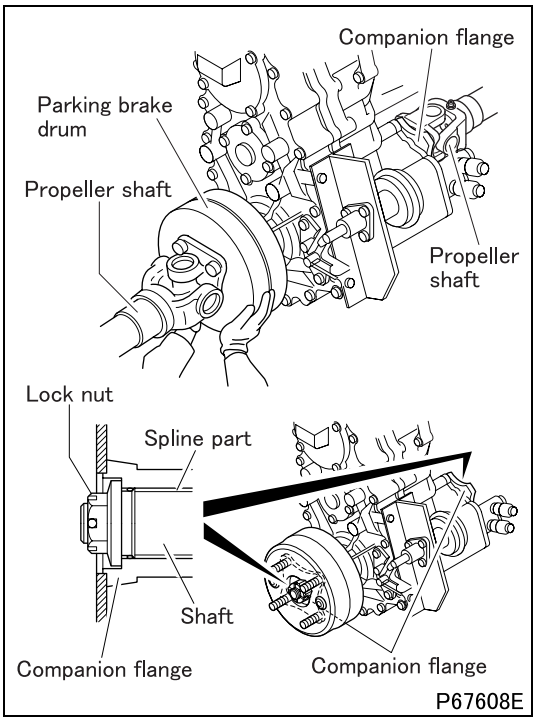

- Check for looseness in the propeller shaft mounting bolts. (See Gr25.)
- Move the parking brake drum (on the rear drive side) and the companion flange (on the front drive side) in axial and vertical directions to check for excessive play between the companion flange and the shaft.
- If excessive play is detected, remove the propeller shaft, then check the lock nut for looseness and the splines on companion flange and shaft for abnormalities. If any part is found defective, replace the part. (See FRONT DRIVE and REAR DRIVE sections.)

3. Inspection and Replacement of Transfer Oil

WARNING ⚠

- **Temperature of transfer oil is high immediately after driving. Perform work when oil is cold.**

Tightening torque (Unit: N·m {ft.lbs, kgf·m})

Mark	Parts to be tightened	Tightening torque	Remarks
–	Inspection plug	68.6 ± 14.7 {51 ± 11, 7.0 ± 1.5}	–
	Drain plug (magnet type)		

Lubricant and/or sealant

Mark	Points of application	Specified lubricant and/or sealant	Quantity
–	Thread area of inspection plug	ThreeBond 1105	As required
	Thread area of drain plug		
–	Transfer case	General: API GL-3 SAE 80 Warm region: API GL-3 SAE 90 Tropical region: API GL-4 SAE 90	3.1 L {3.3 qts.}

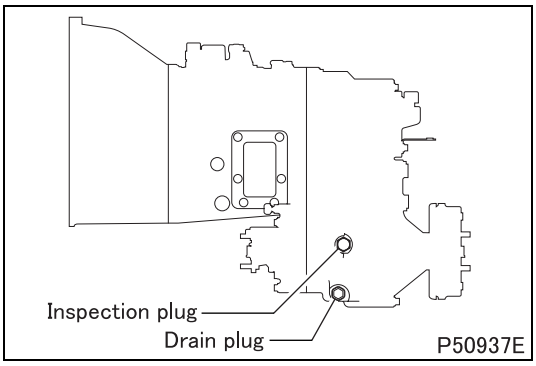

[Inspection]

(1) Inspection of oil quantity

- Remove the inspection plug, and check that transfer oil is filled up to the neck.
- If oil is not sufficient, fill oil from the inspection plug hole up to the neck.
- After filling, apply sealant to the inspection plug and tighten it to the specified torque.

(2) Inspection of oil quality and inclusions

- When draining transfer oil, check for oil quality, metal chips and metal powder.
- If an abnormally large amount of metal chips and metal powder is found, disassemble the transfer assembly for service, as abnormalities may be caused inside.

[Replacement]

- Remove the drain plug to drain transfer oil. Drainage can be made quickly with the inspection plug removed.
- After draining transfer oil, apply sealant to the drain plug and tighten it to the specified torque. In case of the drain plug of magnet type, clean it before installation.
- Fill transfer oil of the specified quantity from the inspection plug hole.
- After filling, check that transfer oil is filled up to the neck. If oil is not sufficient, replenish it.
- After completing work, apply sealant to the inspection plug and tighten it to the specified torque.

REMOVAL AND INSTALLATION OF TRANSMISSION (WITH TRANSFER)

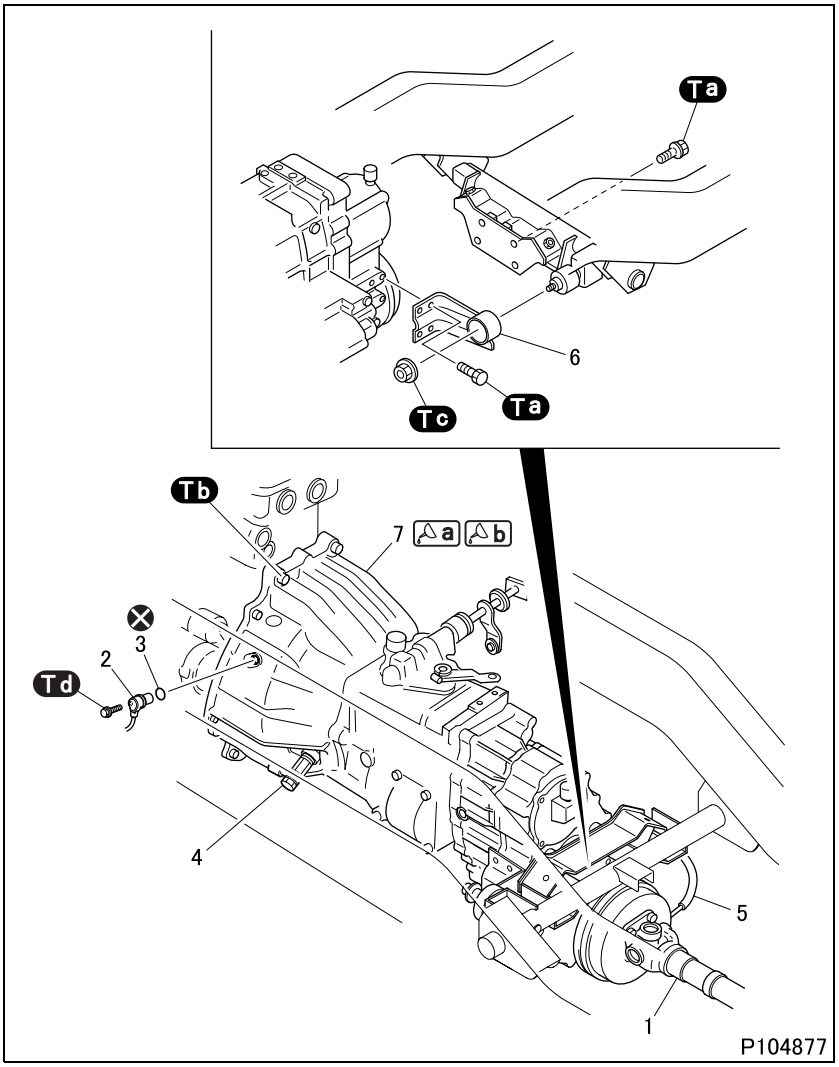

● Removal sequence

1 Propeller shaft (See Gr25.)
2 Engine speed sensor
3 O-ring
4 Connector (See Gr21.)
5 Parking brake cable (See Gr36.)
6 Roll stopper bracket
7 Transmission

● Installation sequence

Follow the removal sequence in reverse.

- Check and adjust the parking brake lever after the installation. (See Gr36.)

Tightening torque (Unit: N·m {ft.lbs, kgf·m})

Mark	Parts to be tightened		Tightening torque	Remarks
Ta	Bolt (transmission mounting)		45 to 65 {33 to 48, 4.6 to 6.6}	–
Tb	Bolt (transmission mounting)	M10	47.1 {35, 4.8}	–
		M12	82.4 {61, 8.4}	–
Tc	Nut (roll stopper bracket mounting)		38 to 54 {28 to 40, 3.9 to 5.5}	–
Td	Bolt (engine speed sensor mounting)		8 {0.82}	–

Lubricant and/or sealant

Mark	Points of application	Specified lubricant and/or sealant	Quantity
a	Drive pinion spline	Molybdenum disulfide grease [NLGI No. 2 (Li soap)]	As required
b	Mating surface of clutch housing and engine	ThreeBond 1215	As required

◆Removal procedure◆

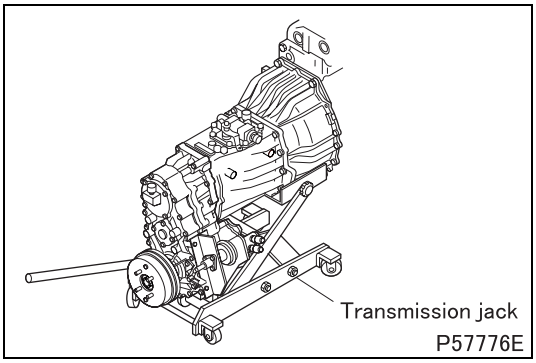

■ **Removal: Transmission**

- Support the transmission on the transmission jack and remove transmission mounting bolts.

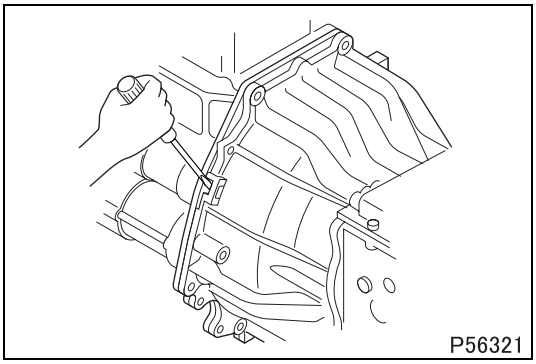

- Insert a screwdriver into the three removal grooves and pry the transmission from the engine.
- Move the transmission backward until the spline of the drive pinion is detached from the clutch.

CAUTION ⚠

- **Make sure that you pull the transmission out in a straight line. If you seesaw the transmission violently, you will damage the spline that connects the drive pinion and the clutch.**

◆Installation procedure◆

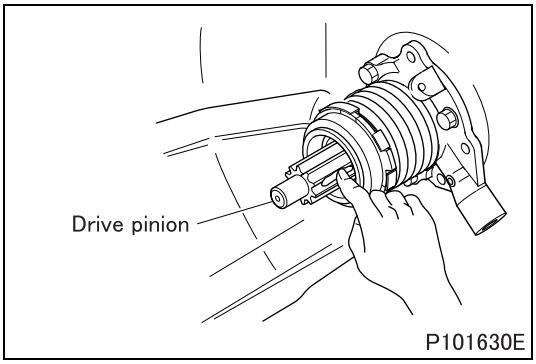

■ **Installation: Transmission**

- Check the spline of the drive pinion for rust.
- If rust is found, remove it using a wire brush.
- Rub grease evenly onto the clutch disc sliding surface of the drive pinion using your hand.

CAUTION ⚠

- **Make sure that you apply only the necessary amount of grease because too much grease would drip and cause clutch slip.**

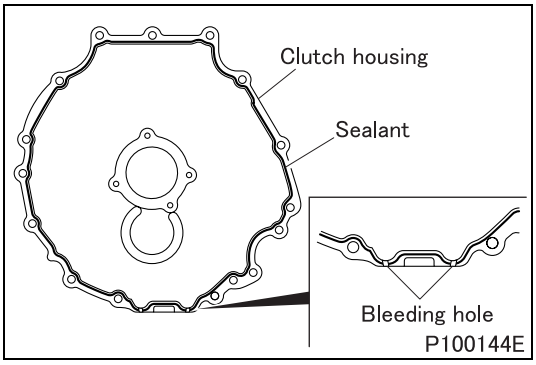

[Applying sealant]

- Apply sealant following manners shown below.

CAUTION ⚠

- **Take care not to apply sealant under any of the following conditions. Otherwise it causes water infiltration.**
  - **There is dust, oil, grease, etc. on the mating surface.**
  - **The diameter or thickness of the applied sealant is extremely different at each part.**
  - **The applied sealant has some breaks.**
  - **The applied sealant covers the bleeding hole of the clutch housing and engine parts.**

<Case of using nozzle gun>

- Clean the mating surfaces of each part.
- Apply sealant on the width center of the mating surfaces so that the diameter of the applied sealant is the same as the diameter of the nozzle. The line of applying sealant is illustrated.

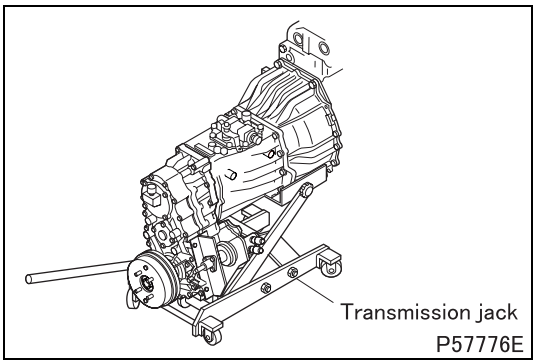

<Case of using spatula, etc.>

- Clean the mating surfaces of each part.
- Apply sealant evenly on the entire mating surfaces.

[Installation]

- After applying the sealant, install the transmission before the sealant dries. Be sure not to allow the sealant to be displaced.
- Do not start the engine within one hour after installing the transmission.
- When loosing or removing transmission mounting bolts, be sure to reapply the sealant.

- Support the transmission on the transmission jack, and insert the transmission into the pilot bearing of the flywheel paying attention to the drive pinion spline.
- Tighten transmission mounting bolts to the specified torque.

M E M O

REMOVAL AND INSTALLATION OF TRANSFER

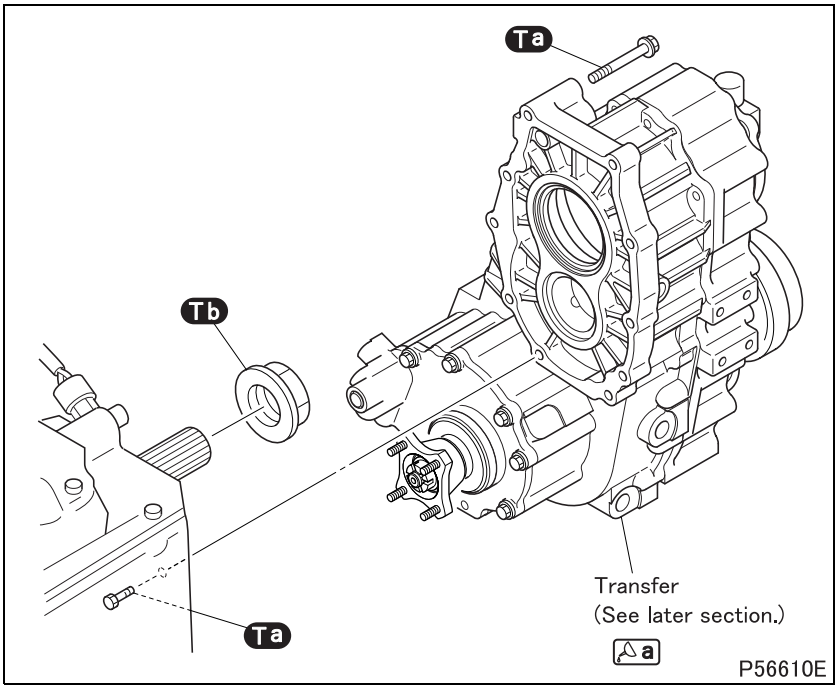

CAUTION ⚠

- **Do not shake the transmission violently when removing the transfer from it, as doing so may damage the mainshaft end and gears.**

NOTE

- **The lock nut does not need to be removed if the transfer alone is removed.**

Tightening torque (Unit: N·m {ft.lbs, kgf·m})

Mark	Parts to be tightened	Tightening torque	Remarks
Ta	Bolt (transfer mounting)	44.5 {33, 4.5}	–
Tb	Lock nut	490 ± 49 {360 ± 36, 50 ± 5}	–

Lubricant and/or sealant

Mark	Points of application	Specified lubricant and/or sealant	Quantity
a	Transmission mounting surface of transfer	ThreeBond 1215	As required

Special tools (Unit: mm {in.})

Mark	Tool name and shape	Part No.	Application
a	Socket wrench A: 60 {2.36} 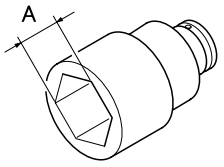 P56611	MH063006	Removal and installation of lock nut

◆Installation procedure◆

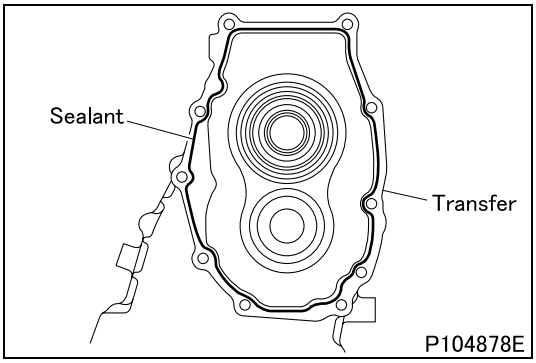

■ Installation: Transfer

[Applying sealant]

- Apply sealant following manners shown below.

CAUTION ⚠

- **Take care not to apply sealant under any of the following conditions. Otherwise it causes oil leak.**
  - **There is dust, oil, grease, etc. on the mating surface.**
  - **The diameter or thickness of the applied sealant is extremely different at each part.**
  - **The applied sealant has some breaks.**

<Case of using nozzle gun>

- Clean the mating surfaces of each part.
- Apply sealant on the width center of the mating surfaces so that the diameter of the applied sealant is the same as the diameter of the nozzle. The line of applying sealant is illustrated.

<Case of using spatula, etc.>

- Clean the mating surfaces of each part.
- Apply sealant evenly on the entire mating surfaces.

[Installation]

- After applying the sealant, install the transfer before the sealant dries. Be sure not to allow the sealant to be displaced.
- Do not start the engine within one hour after installing the transfer.
- When loosing or removing transfer mounting bolts, be sure to re-apply the sealant.

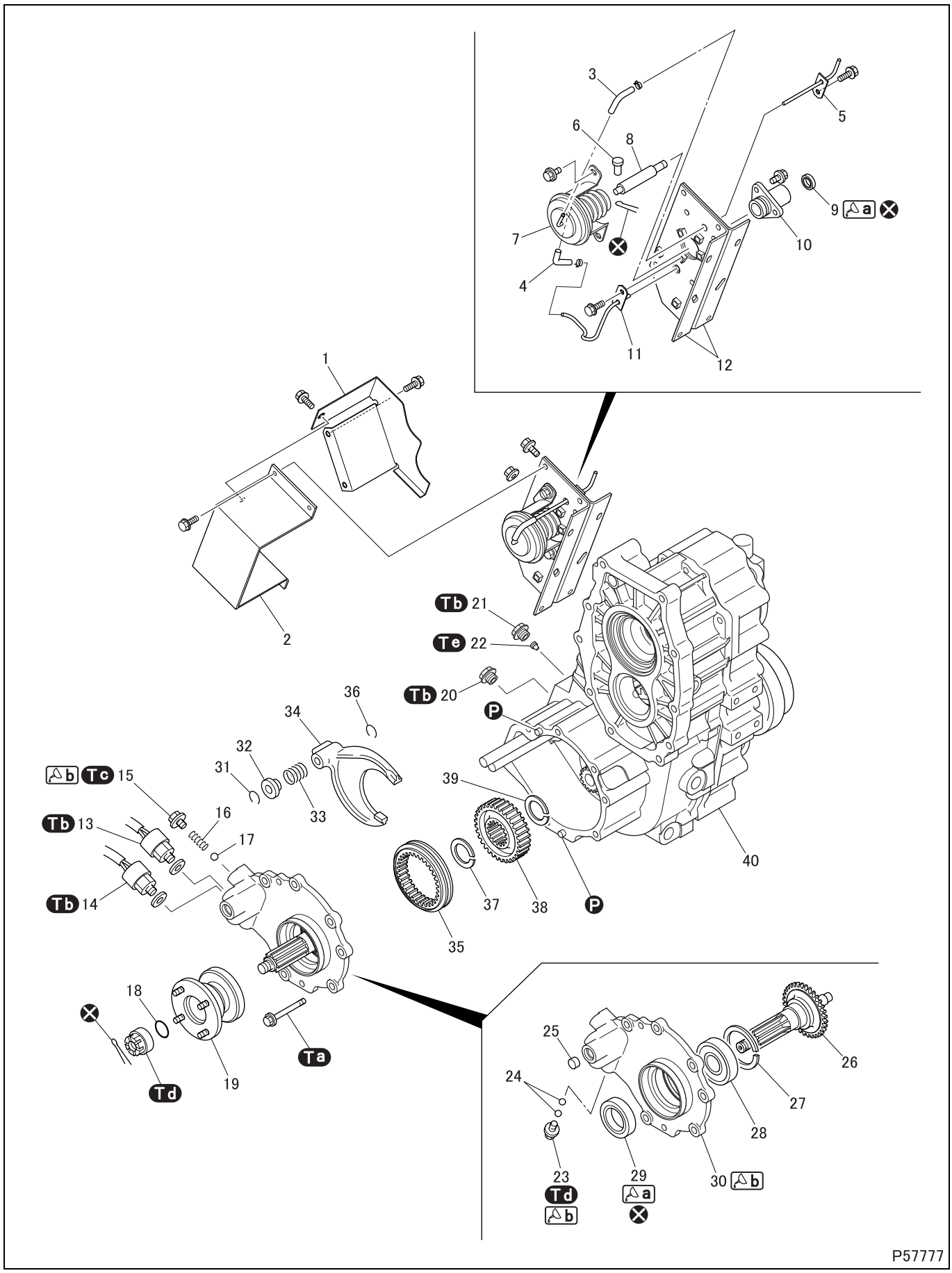
3
5
6
8
9 a
7
10
4
11
12
1
2
Tb 21
Te 22
Tb 20
P
36
34
32
31
b Tc 15
16
Tb 13
17
Tb 14
33
39
40
37
38
P
35
18
19
Ta
Td
25
26
24
27
28
23
Td
b
29
a
30 b

P57777

● **Disassembly sequence**

1 Actuator rear cover
2 Actuator front cover
3 Vacuum hose
4 Vacuum hose
5 Pipe
6 Clevis pin
7 Vacuum actuator
8 Shift rod
9 Oil seal
10 Shift rod bracket
11 Pipe
12 Actuator bracket
13 Transfer low switch
14 Transfer four-wheel drive switch
15 Screw plug
16 Poppet spring
17 Steel ball
18 O-ring
19 Companion flange
20 Plug
21 Plug
22 Set bolt
23 Screw plug
24 Interlock ball
25 Dust plug
26 Front drive shaft
27 Snap ring
28 Bearing
29 Oil seal
30 Front drive case cover
31 Snap ring
32 Lug spring retainer
33 Shift lug spring
34 Front drive shift fork
35 Synchronizer sleeve
36 Snap ring
37 Snap ring
38 Front drive hub
39 Snap ring
40 Transfer
(See later section.)

⊗: Non-reusable parts
Ⓟ: Locating pin

● **Assembly sequence**

Follow the disassembly sequence in reverse except for the following.
23→24→25

Service standards (Unit: mm {in.})

Location	Maintenance item	Standard value	Limit	Remedy
7	Airtightness of vacuum actuator (Applying negative pressure: 66.7 kPa {19.7 in.Hg, 500 mmHg}, measure after 15 sec.)	Negative pressure: 63.3 kPa {18.7 in.Hg, 475 mmHg} or more	–	Replace
16	Poppet spring installed load (installed length 22 {0.87})	81 N {18 lbs, 8.3 kgf}	65 N {15 lbs, 6.6 kgf}	Replace
33	Shift lug spring installed load (installed length 20.6 {0.81})	22 N {5.0 lbs, 2.2 kgf}	18 N {4.0 lbs, 1.8 kgf}	Replace
34, 35	Clearance between front drive shift fork and synchronizer sleeve	0.3 to 0.5 {0.012 to 0.020}	1.0 {0.039}	Replace

Tightening torque (Unit: N·m {ft.lbs, kgf·m})

Mark	Parts to be tightened	Tightening torque	Remarks
Ⓣa	Bolt (shift rail cover mounting)	44.5 {33, 4.5}	–
	Bolt (front drive case cover mounting)		
Ⓣb	Transfer low switch	34.3 ± 4.9 {25 ± 3.6, 3.5 ± 0.5}	–
	Transfer four-wheel drive switch		
	Plug		
Ⓣc	Screw plug	39.2 {29, 4}	–
Ⓣd	Lock nut	294 ± 49 {215 ± 36, 30 ± 5}	–
Ⓣe	Set bolt	29.4 {22, 3}	After tightening, caulk it at three locations.

Lubricant and/or sealant

Mark	Points of application	Specified lubricant and/or sealant	Quantity
a	Lip area of oil seal	Wheel bearing grease [NLGI No. 2 (Li soap)]	As required
b	Thread area of screw plug	ThreeBond 1215	As required
	Transfer mounting surface of front drive case cover		

Special tools (Unit: mm {in.})

Mark	Tool name and shape	Part No.	Application
a	Oil seal installer A: φ35 {1.38}, B: φ15.5 {0.61}, C: 9 {0.35} 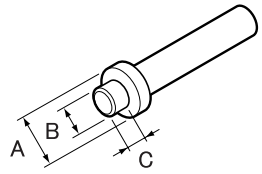 P56613	MH061923	Installation of oil seal
b	Bearing installer A: φ52 {2.05}, B: φ42 {1.65} 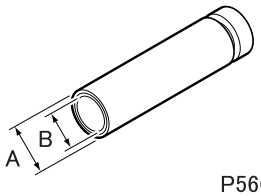 P56614	MB999104	Installation of oil seal
c	Differential bearing inner race installer adapter A: φ88 {3.46}, B: φ50 {1.97} 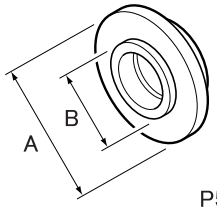 P56615	MB999105	
d	Snap ring expander 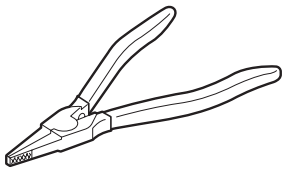 P01137	MH061268	Removal and installation of snap ring

◆Removal procedure◆

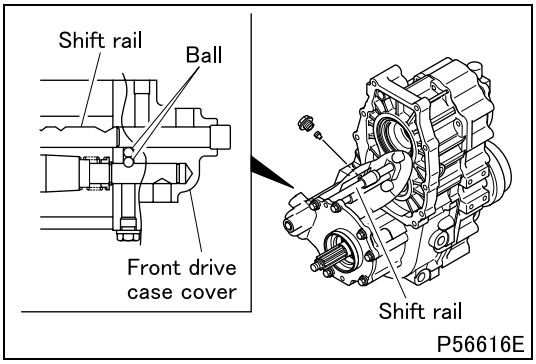

P56616E

■ Removal: Front drive case cover

- After removing the plug and set bolt, pull the high and low shift rail toward the parking brake side until the rail stops (the rail moves to the illustrated position) and remove the front drive case cover.

NOTE

- **Be careful that the interlock balls may fall when the front drive case cover is removed.**

◆Inspection procedure◆

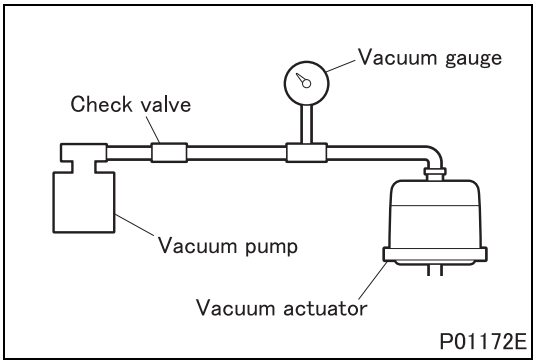

■ **Inspection: Vacuum actuator**

- Pipe the vacuum pump, check valve and vacuum gauge, apply negative pressure of 66.7 kPa {19.7 in.Hg, 500 mmHg} to the vacuum actuator, and stop the vacuum pump. After 15 seconds, measure the negative pressure with the vacuum gauge.
- If the measured value deviates from the standard value, replace the vacuum actuator.

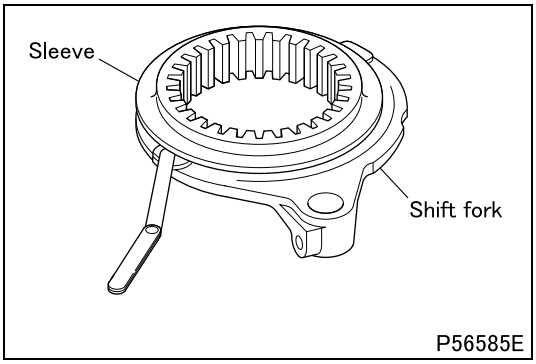

■ **Inspection: Clearance between front drive shift fork and synchronizer sleeve**

- If the measured value exceeds the limit, replace defective parts.

◆Installation procedure◆

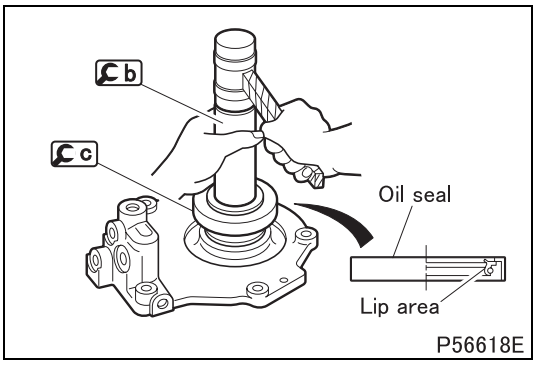

■ **Installation: Oil seal**

- Apply grease to the lip area of the oil seal and install it on the front drive case cover in the illustrated direction.

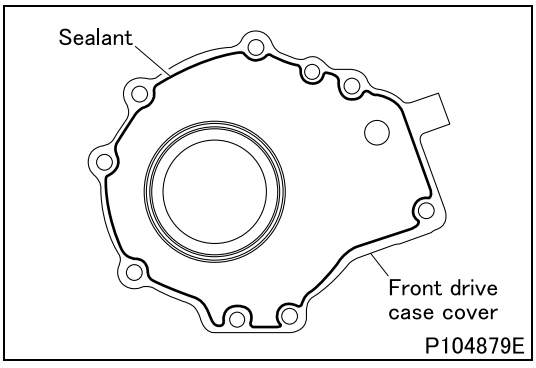

■ **Installation: Front drive case cover**

[Applying sealant]

- Apply sealant following manners shown below.

CAUTION ⚠

- **Take care not to apply sealant under any of the following conditions. Otherwise it causes oil leak.**
  - **There is dust, oil, grease, etc. on the mating surface.**
  - **The diameter or thickness of the applied sealant is extremely different at each part.**
  - **The applied sealant has some breaks.**

<Case of using nozzle gun>

- Clean the mating surfaces of each part.
- Apply sealant on the width center of the mating surfaces so that the diameter of the applied sealant is the same as the diameter of the nozzle. The line of applying sealant is illustrated.

<Case of using spatula, etc.>

- Clean the mating surfaces of each part.
- Apply sealant evenly on the entire mating surfaces.

[Installation]

- After applying the sealant, install the front drive case cover before the sealant dries. Be sure not to allow the sealant to be displaced.
- Do not start the engine within one hour after installing the front drive case cover.
- When loosing or removing front drive case cover mounting bolts, be sure to reapply the sealant.

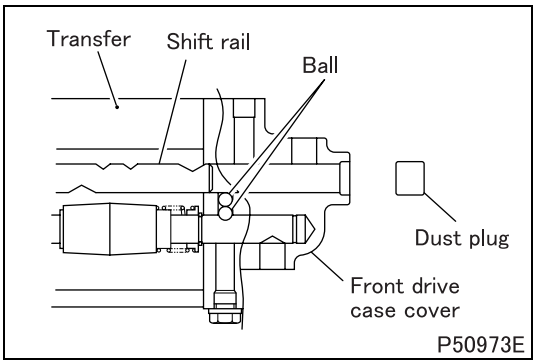

■ Installation: Interlock ball

- Install the front drive case cover on the transfer.
- Push in the high and low shift rail to the illustrated position (until the hole in which the balls enter is visible from the dust plug hole), and roll in the interlock balls from the dust plug to install.

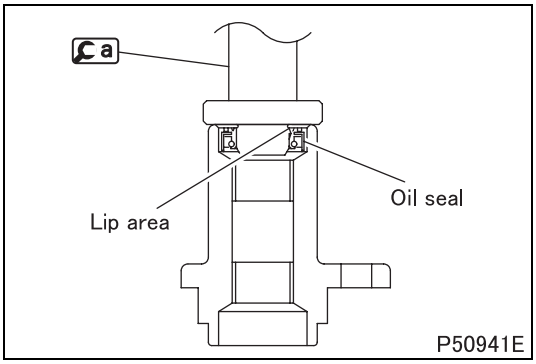

■ Installation: Oil seal

- Apply grease to the lip area of the oil seal and install it in the illustrated direction.

M E M O

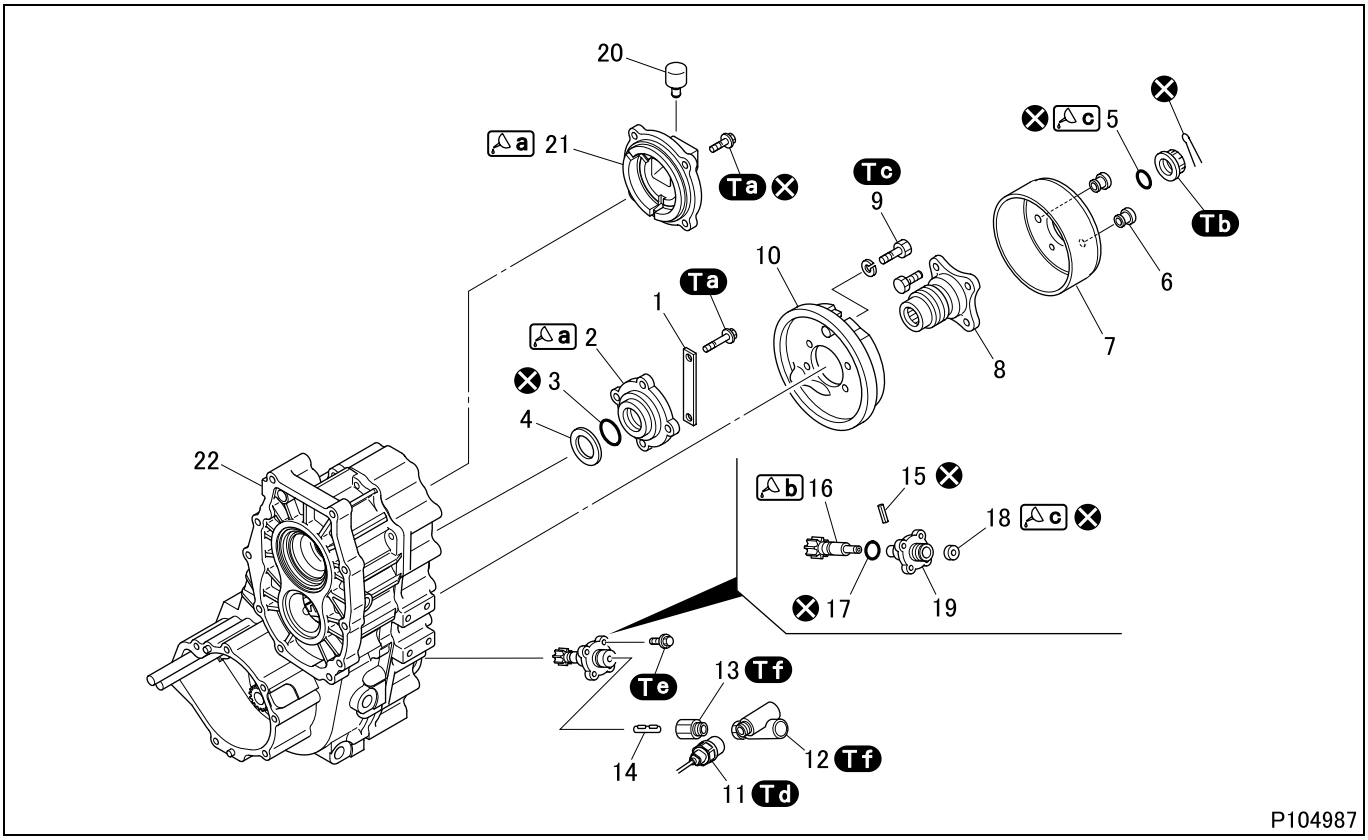

● **Disassembly sequence**

1 Plate
2 Idler rear cover
3 O-ring
4 Shim
5 O-ring
6 Dust plug
7 Parking brake drum
8 Companion flange
9 Reamer bolt
10 Parking brake (See Gr36.)
11 Vehicle speed sensor
12 L-joint
13 Speedometer joint
14 Speed drive shaft
15 Spring pin
16 Speedometer gear
17 O-ring
18 Oil seal
19 Speedometer gear bushing
20 Air breather
21 Input rear cover
22 Transfer (See later section.)

⊗: Non-reusable parts

● **Assembly sequence**

Follow the disassembly sequence in reverse.

Service standards (Unit: mm {in.})

Location	Maintenance item		Standard value	Limit	Remedy
–	Startup torque of idler gear bearing (measure with tangential force at outer diameter position of parking brake drum)		0 to 2 N·m {0 to 1.5 ft.lbs, 0 to 0.2 kgf·m} Tangential force: 0 to 26.9 N {0 to 20 ft.lbs, 0 to 2.7 kgf}	–	Adjust or replace
7	Parking brake drum	Inside diameter	$\phi 180\ ^{+0.2}_{0}$ {$7.09\ ^{+0.0079}_{0}$}	ϕ171 {7.13}	Replace
		Out of square	0 to 0.05 {0 to 0.0020}	–	
		Concentricity	0 to 0.1 {0 to 0.0039}	–	
		Taper	0 to 0.1 {0 to 0.0039}	–	
		Static rotational imbalance	0.0049 N·m {0.004 ft.lbs, 0.5 gf·m} or less	–	
8	Runout at socket portion of companion flange		0 to 0.15 {0 to 0.0059}	0.15 {0.0059}	Replace
16, 19	Clearance between speedometer gear and speedometer gear bushing		0.04 to 0.09 {0.0016 to 0.0035}	0.15 {0.0059}	Replace

Tightening torque (Unit: N·m {ft.lbs, kgf·m})

Mark	Parts to be tightened	Tightening torque	Remarks
Ta	Bolt (idler rear cover mounting)	44.5 {33, 4.5}	–
	Bolt (input rear cover mounting)		
Tb	Lock nut	294 ± 49 {215 ± 36, 30 ± 5}	–
Tc	Reamer bolt	52 to 66.7 {38 to 49, 5.3 to 6.8}	–
Td	Vehicle speed sensor	14.7 to 29.4 {11 to 22, 1.5 to 3}	–
Te	Bolt (speedometer gear bushing mounting)	23.5 {17, 2.4}	–
Tf	L-joint	34 to 49 {3.5 to 5}	–
	Speedometer joint		

Lubricant and/or sealant

Mark	Points of application	Specified lubricant and/or sealant	Quantity
a	Transfer mating surface of idler rear cover	ThreeBond 1215	As required
	Transfer mating surface of input rear cover		
b	Speedometer gear bushing sliding area of speedometer gear	Molybdenum disulfide grease [NLGI No. 2 (Li soap)]	As required
c	Lip area of oil seal	Wheel bearing grease [NLGI No. 2 (Li soap)]	As required

Special tools (Unit: mm {in.})

Mark	Tool name and shape	Part No.	Application
ⓒa	Flange puller A: ϕ95 {3.74} B: ϕ100 {3.94} C: ϕ90 {3.54} 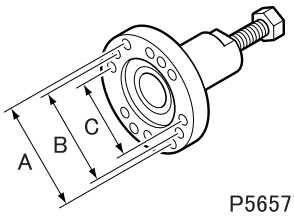 P56577	MH061848	Removal of companion flange

◆Work before removal◆

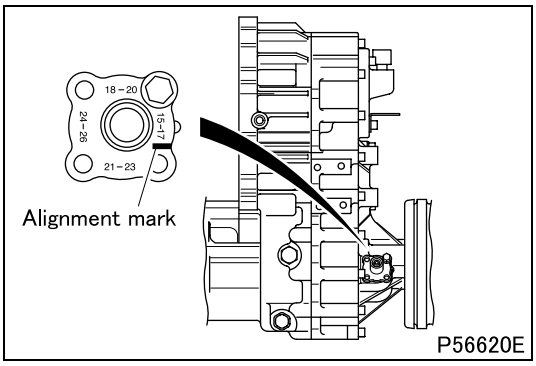

P56620E

■ **Alignment marks: Speedometer gear bushing**

- The installed direction of the speedometer gear bushing is determined by the number of the speedometer gear tooth.
- Put alignment marks to prevent misassembly.

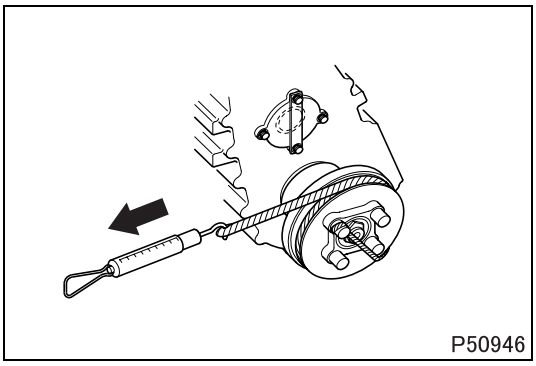
P50946

■ **Inspection: Startup torque of idler gear bearing**

- Measure the tangential force at the outer diameter of the parking brake drum using a spring balance.

◆Removal procedure◆

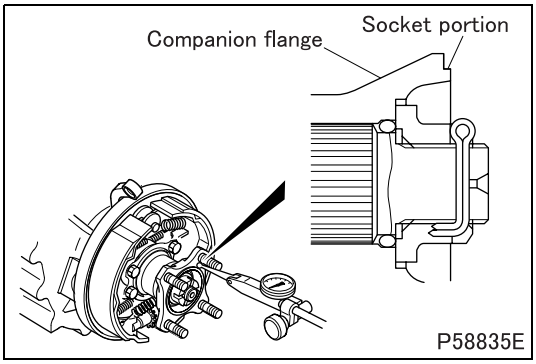

P58835E

■ **Inspection: Runout at socket portion of companion flange**

- After removing the parking brake drum, measure runouts of the companion flange at its socket portion.
- If the measurement exceeds the specified limit, replace the companion flange.

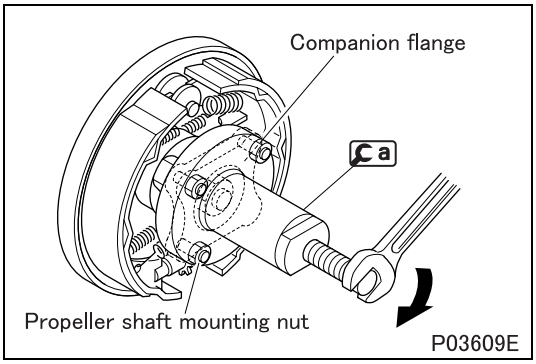

■ **Removal: Companion flange**

◆Inspection procedure◆

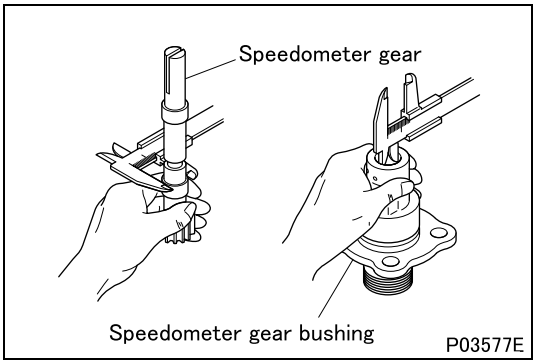

■ **Inspection: Clearance between speedometer gear and speedometer gear bushing**

- If the clearance exceeds the limit, replace defective parts.

◆Installation procedure◆

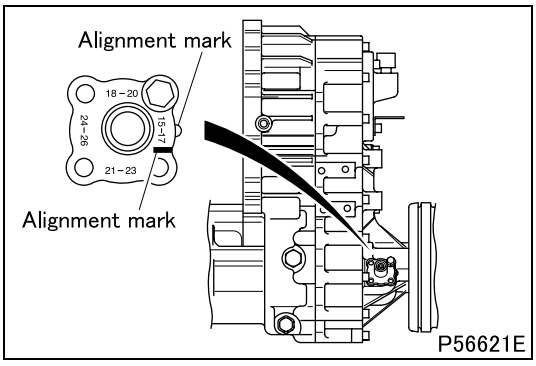

■ **Installation: Speedometer gear bushing**

- When replacing the speedometer gear bushing, align the alignment mark of the old part with that of the transfer to install.

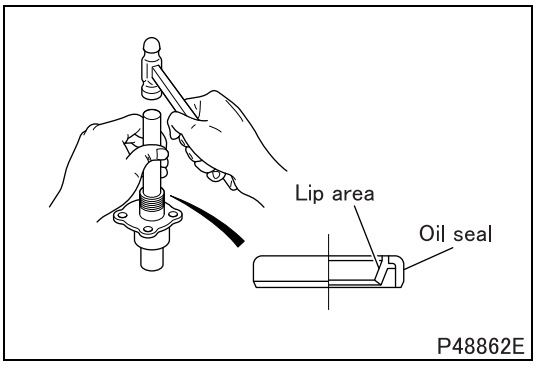

■ **Installation: Oil seal**

- Apply grease to the lip area of the oil seal.
- Install the oil seal evenly in the illustrated direction using a round bar of outer diameter of approx. 15 mm {0.59 in.}.

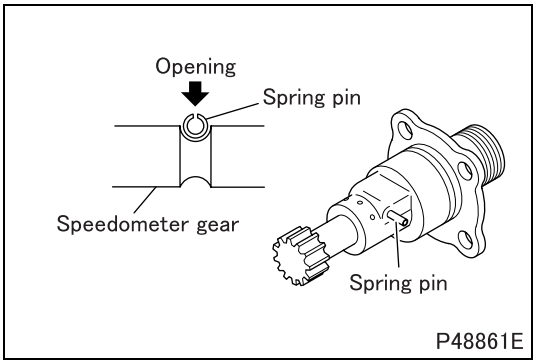

■ **Installation: Spring pin**

- Install the spring pin in the speedometer gear bushing in the illustrated direction.

◆Inspection after installation◆

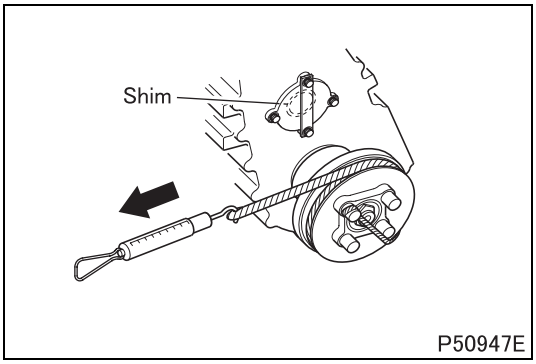

■ **Inspection: Starting torque of pinion bearing**

- Measure the tangential force at the outer diameter of the parking brake drum using a spring balance.
- If the tangential force meets the specified value, the startup torque becomes the standard value.
- If the measured value deviates from the standard value, adjust by changing thickness of the shim.
  Kinds of shim: 0.10, 0.15, 0.20, 0.50 mm {0.0039, 0.0059, 0.0079, 0.020 in.}

M E M O

TRANSFER

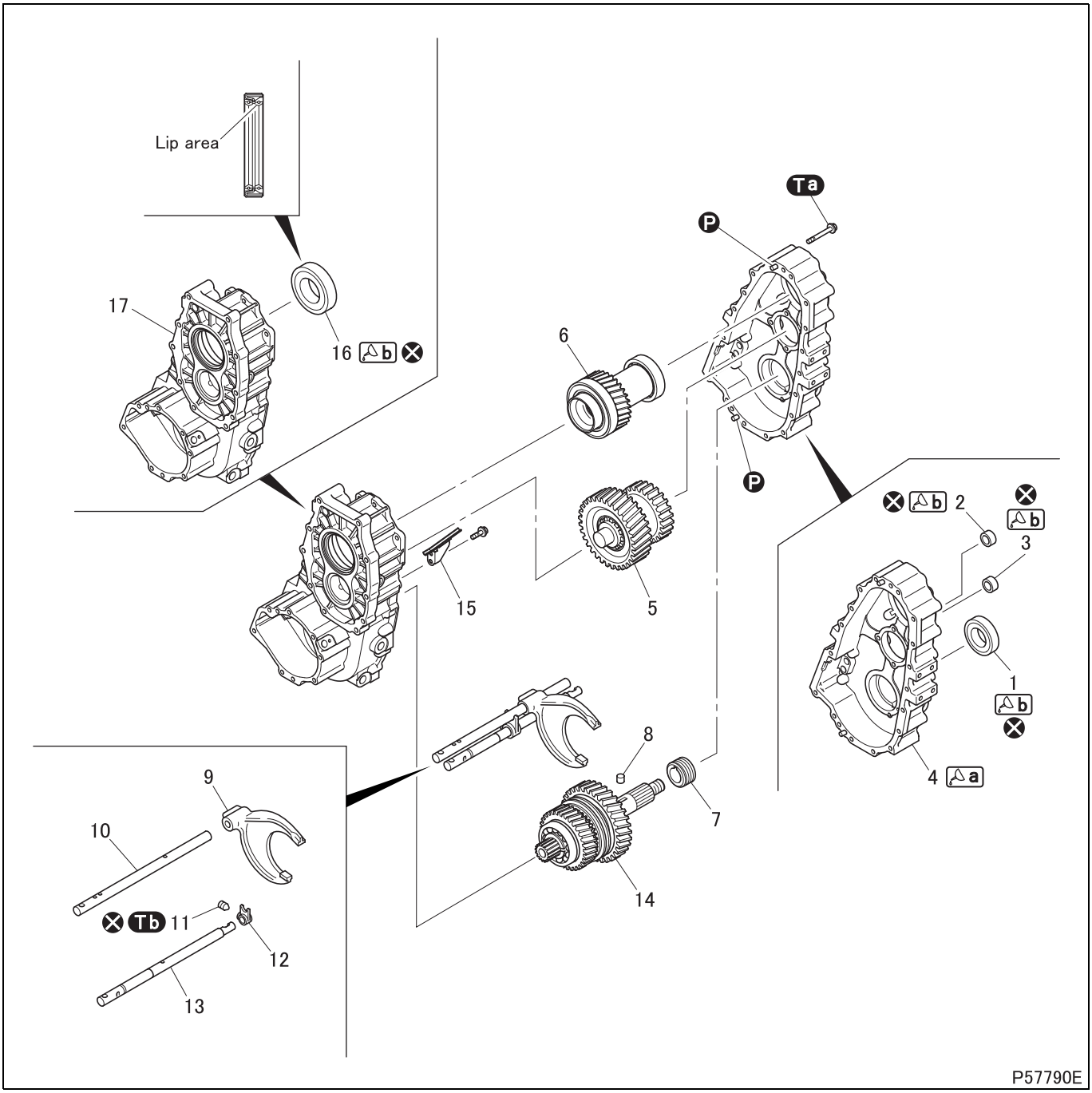

● **Disassembly sequence**

1 Oil seal
2 Oil seal
3 Oil seal
4 Transfer cover
5 Transfer idler gear (See later section.)
6 Transfer drive gear (See later section.)
7 Speedometer worm
8 Pin
9 High and low shift fork
10 High and low shift rail
11 Set bolt
12 Shift rail stopper
13 Front drive shift rail
14 Transfer driven rear shaft (See later section.)
15 Oil gutter
16 Oil seal
17 Transfer case

Ⓟ: Locating pin
⊗: Non-reusable parts

● **Assembly sequence**

Follow the disassembly sequence in reverse.

Service standards (Unit: mm {in.})

Location	Maintenance item		Standard value	Limit	Remedy
–	End play	Driven rear shaft low gear	0.25 to 0.40 {0.0098 to 0.016}	0.6 {0.024}	Replace
		Driven rear shaft high gear			
9	Tilt of high and low shift fork claws		0 to 0.1 {0 to 0.0039}	0.2 {0.0079}	Replace
9, 14	Clearance between high and low shift fork and synchronizer sleeve of transfer driven rear shaft		0.3 to 0.5 {0.012 to 0.020}	1.0 {0.039}	Replace
10, 13	Bend of high and low shift rail		0 to 0.02 {0 to 0.00079}	0.03 {0.0012}	Replace

Tightening torque (Unit: N·m {ft.lbs, kgf·m})

Mark	Parts to be tightened	Tightening torque	Remarks
Ta	Bolt (transfer cover mounting)	44.5 {33, 4.5}	–
Tb	Set bolt	29.4 {22, 3}	After tightening, caulk it at three locations.

Lubricant and/or sealant

Mark	Points of application	Specified lubricant and/or sealant	Quantity
a	Transfer case mating surface of transfer cover	ThreeBond 1215	As required
b	Lip area of oil seal	Wheel bearing grease [NLGI No. 2 (Li soap)]	As required

Special tools (Unit: mm {in.})

Mark	Tool name and shape	Part No.	Application
a	Oil seal installer A: ϕ64 {2.52}, B: ϕ50 {1.97}, C: 17 {0.67} 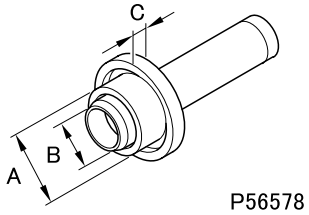 P56578	MH062691	Installation of oil seal
b	Oil seal installer A: ϕ35 {1.38}, B: ϕ15.5 {0.61}, C: 9 {0.35} 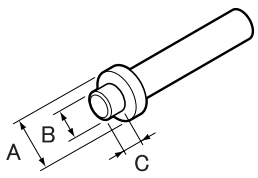 P56613	MH061923	Installation of oil seal

◆Work before removal◆

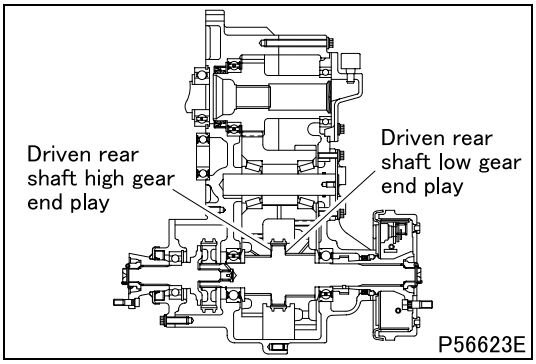

■ Inspection: End play of gears

- Measure the end play using feeler gauge from the actuator bracket mounting face side.
- If the measured value exceeds the limit, replace defective parts.
- Check the play again after assembly and make sure it does not exceed the limit.

◆Inspection procedure◆

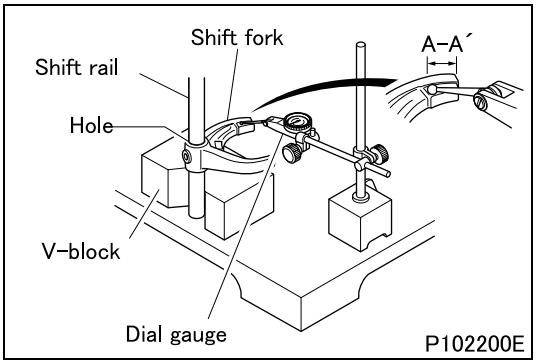

■ Inspection: Tilt of high and low shift fork claws

- Measure the tilt (difference between A and A') of claw A–A' against the high and low shift rail hole of high and low shift fork with pressing the rail to V-block and standing it vertically.
- If the measurement exceeds the limit, replace the high and low shift fork.

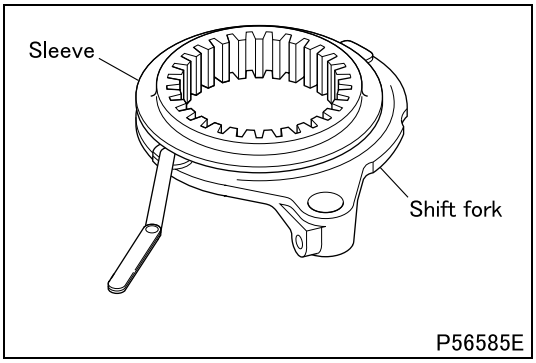

■ Inspection: Clearance between high and low shift fork and synchronizer sleeve of transfer driven rear shaft

- Measure clearance between the shift fork claws and synchronizer sleeve groove.
- If the measured value exceeds the limit, replace defective parts.

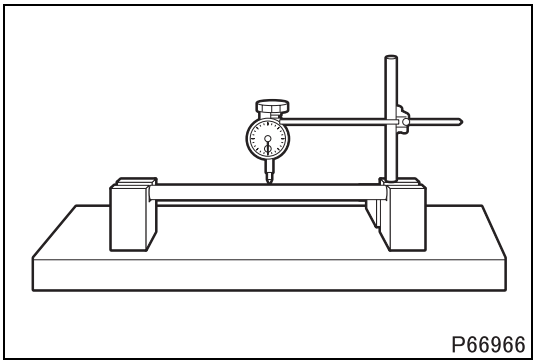

■ Inspection: Bend of high and low shift rail

- Measure the extent of bending at the middle of the high and low shift rail.
- While rotating the high and low shift rail by one revolution, read how much the dial gauge needle will move. A half of the reading observed represents the bend, if any, of the shaft.
- If measurement exceeds the limit, correct or replace the high and low shift rail.

◆Installation procedure◆

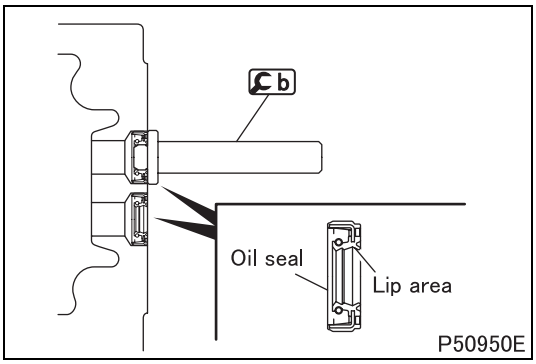

■ Installation: Oil seal

- Apply grease to the lip area of the oil seal and install it on the transfer cover in the illustrated direction.

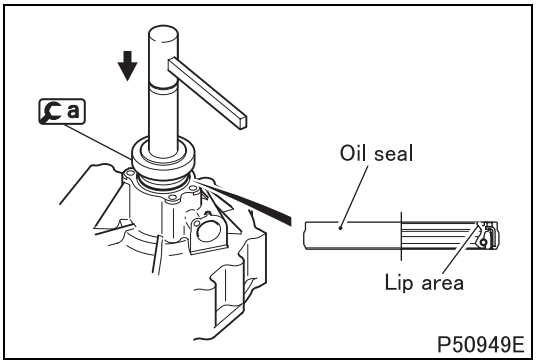

■ **Installation: Oil seal**

- Apply grease to the lip area of the oil seal and install it on the transfer cover in the illustrated direction.

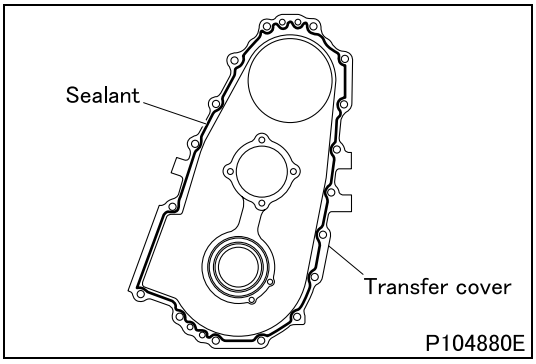

■ **Installation: Transfer cover**

[Applying sealant]

- Apply sealant following manners shown below.

CAUTION ⚠

- **Take care not to apply sealant under any of the following conditions. Otherwise it causes oil leak.**
  - **There is dust, oil, grease, etc. on the mating surface.**
  - **The diameter or thickness of the applied sealant is extremely different at each part.**
  - **The applied sealant has some breaks.**

<Case of using nozzle gun>

- Clean the mating surfaces of each part.
- Apply sealant on the width center of the mating surfaces so that the diameter of the applied sealant is the same as the diameter of the nozzle. The line of applying sealant is illustrated.

<Case of using spatula, etc.>

- Clean the mating surfaces of each part.
- Apply sealant evenly on the entire mating surfaces.

[Installation]

- After applying the sealant, install the transfer cover before the sealant dries. Be sure not to allow the sealant to be displaced.
- Do not start the engine within one hour after installing the transfer cover.
- When loosing or removing transfer cover mounting bolts, be sure to reapply the sealant.

Transfer Idler Gear

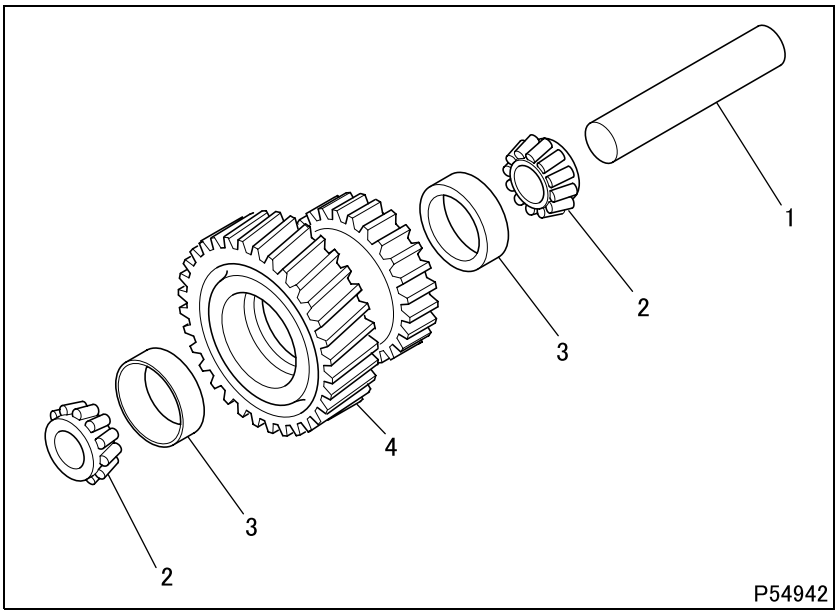

● **Disassembly sequence**

1 Transfer idler shaft
2 Bearing inner race
3 Bearing outer race
4 Transfer idler gear

● **Assembly sequence**

Follow the disassembly sequence in reverse.

◆**Removal procedure**◆

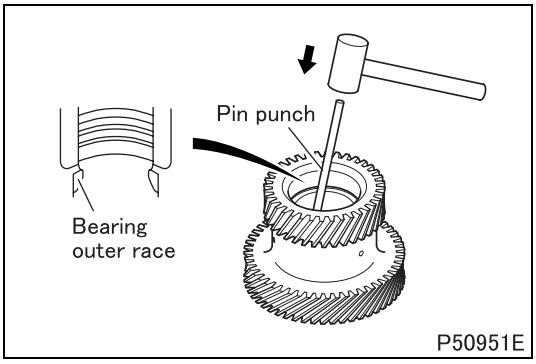

■ **Removal: Bearing outer race**

- Evenly tap the bearing outer race to take it out from the transfer idler gear.

Transfer Drive Gear

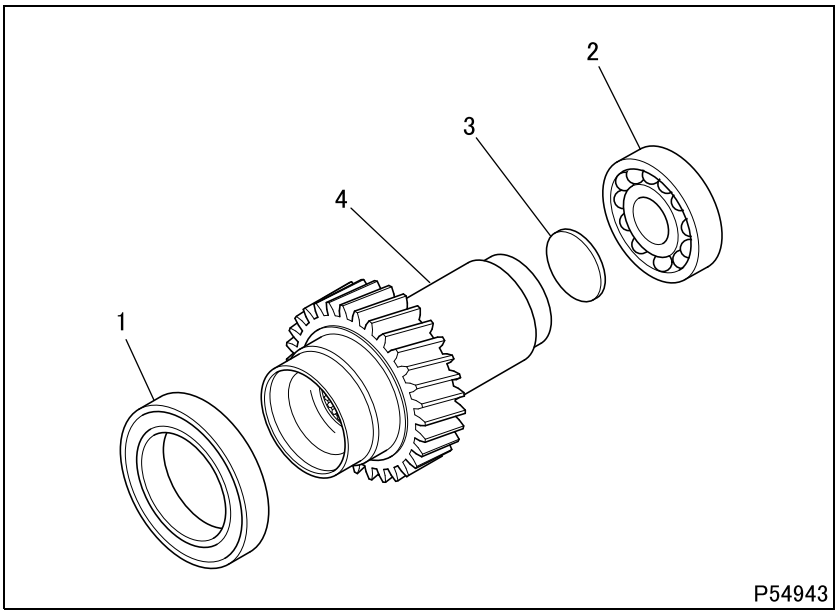

● Disassembly sequence

1 Bearing
2 Bearing
3 Plug
4 Transfer drive gear

● Assembly sequence

Follow the disassembly sequence in reverse.

Transfer Driven Rear Shaft

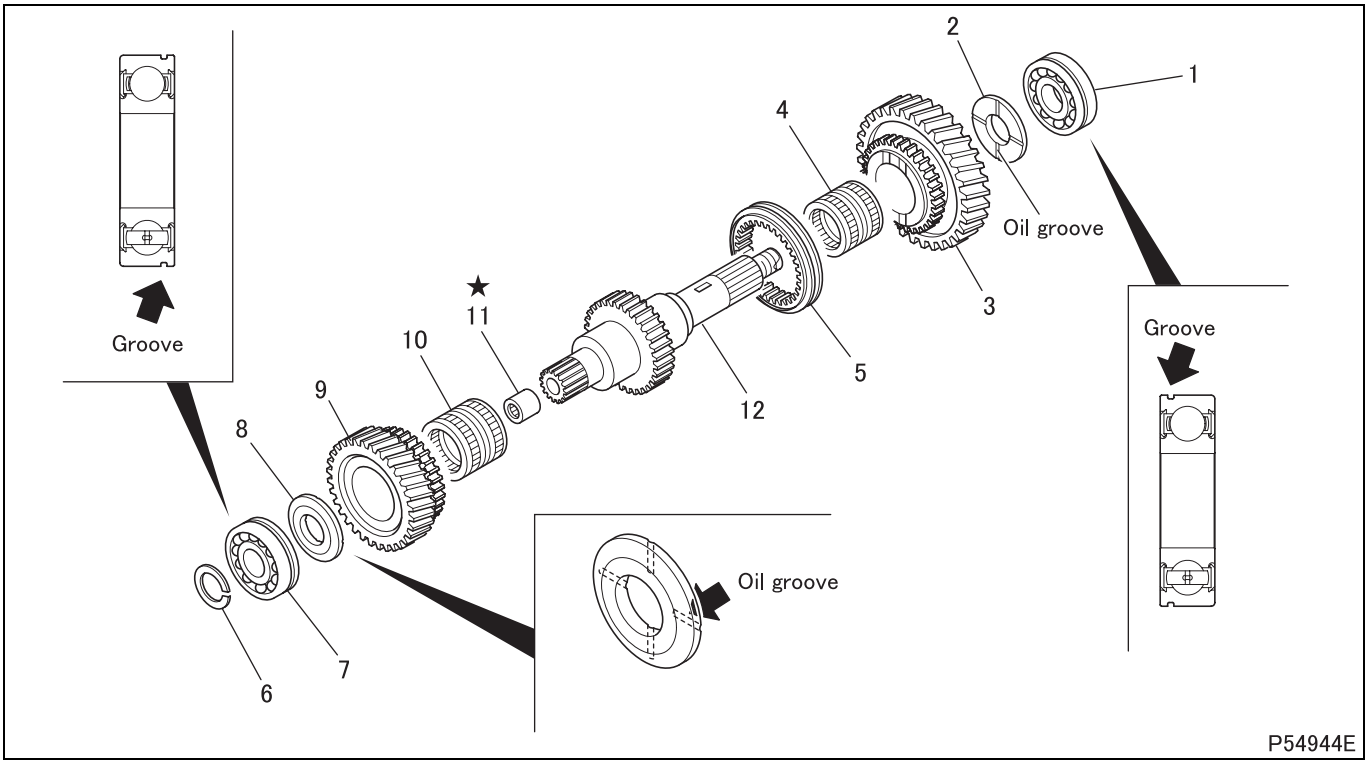

● **Disassembly sequence**

1 Bearing
2 Thrust washer
3 Driven rear shaft low gear
4 Needle bearing
5 Synchronizer sleeve
6 Snap ring
7 Bearing
8 Thrust washer
9 Driven rear shaft high gear
10 Needle bearing
11 Needle bearing
12 Transfer driven shaft

NOTE

- **Do not remove the needle bearing marked with ★ from the transfer driven rear shaft unless any abnormality is found.**

● **Assembly sequence**

Follow the disassembly sequence in reverse.

Service standards (Unit: mm {in.})

Location	Maintenance item	Standard value	Limit	Remedy
–	Play of transfer driven rear shaft in diameter direction	0.02 to 0.06 {0.00079 to 0.0024}	0.12 {0.0047}	Replace

Special tools (Unit: mm {in.})

<table>
<tr><th>Mark</th><th>Tool name and shape</th><th>Part No.</th><th>Application</th></tr>
<tr><td>a</td><td>Snap ring expander
 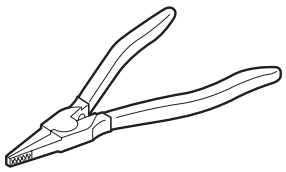
P01137</td><td>MH061268</td><td>Removal and installation of snap ring</td></tr>
<tr><td>b</td><td>Needle roller bearing installer
 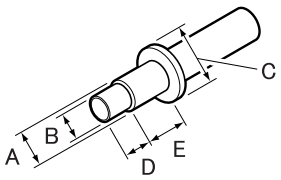
P56625
<table><tr><th>A</th><th>B</th><th>C</th><th>D</th><th>E</th></tr><tr><td>ϕ18.5
{0.73}</td><td>ϕ13
{0.51}</td><td>ϕ40
{1.57}</td><td>15
{0.59}</td><td>28
{1.10}</td></tr></table></td><td>MH061927</td><td>Installation of needle bearing</td></tr>
</table>

◆Inspection before removal◆

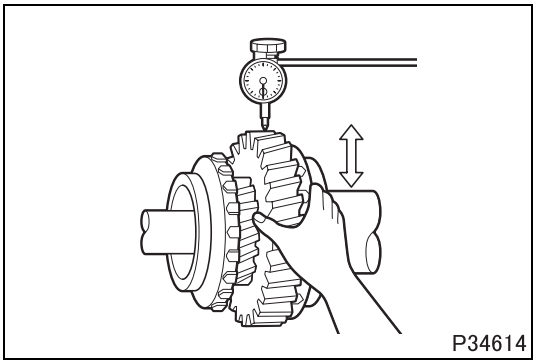
P34614

■ **Inspection: Play of driven rear shaft gears in diameter direction**

- If the measured value exceeds the limit, replace defective parts.
- Check the play again after assembly and make sure it does not exceed the limit.

NOTE

- **When either of the needle bearings of a gear needs to be replaced, replace both of them at the same time. Make sure the new needle bearings have the same package color.**

◆Installation procedure◆

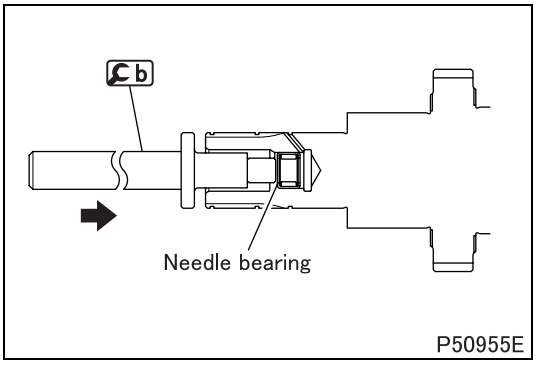

P50955E

■ **Installation: Needle bearing**

TRANSFER CONTROL (HIGH-LOW SWITCHING)

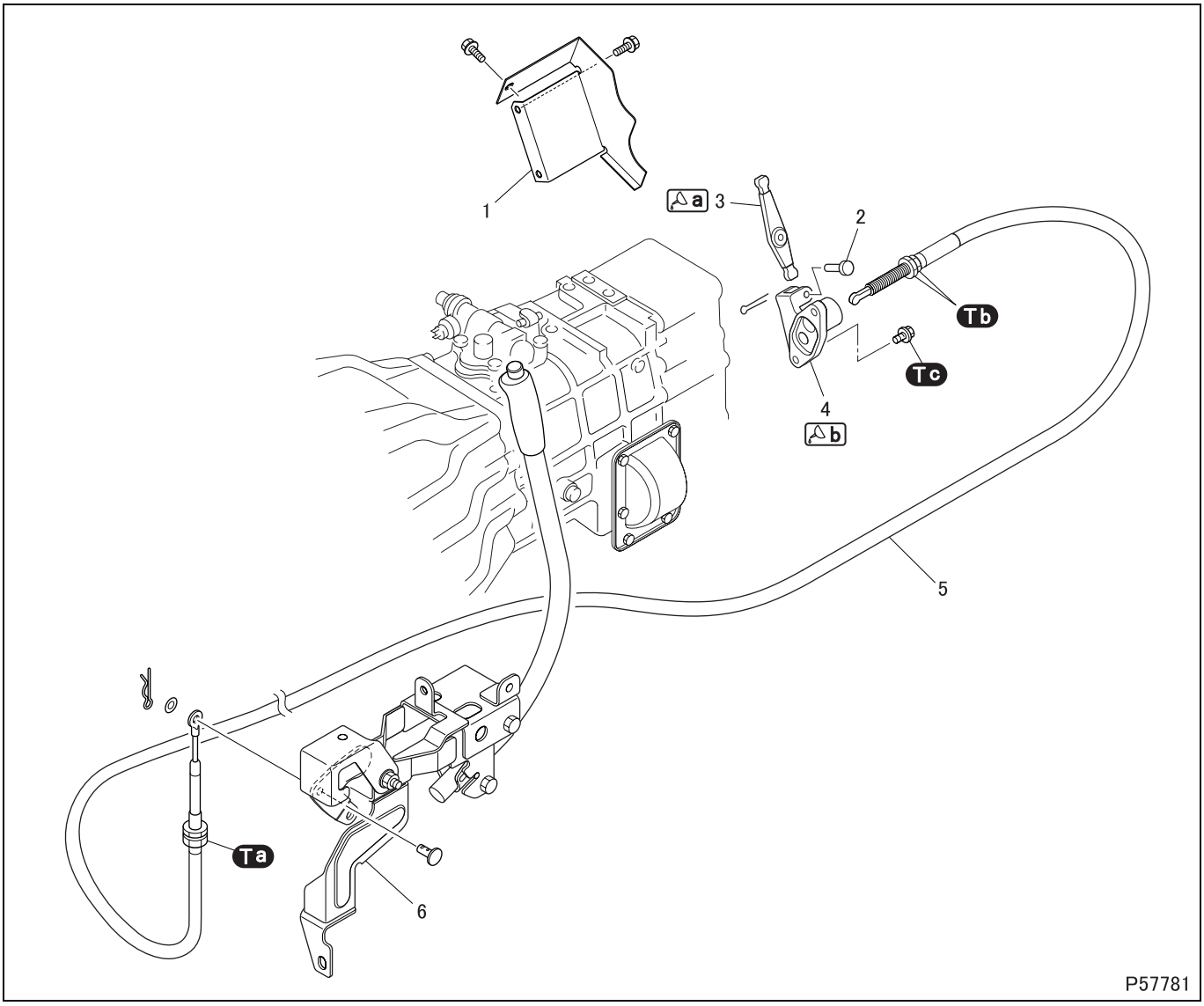

● **Disassembly sequence**

1 Actuator rear cover
2 Clevis pin
3 Transfer gear shift lever
4 Shift rail cover
5 Transfer control cable
6 Transfer control lever (See later section.)

● **Assembly sequence**

Follow the disassembly sequence in reverse.

Tightening torque (Unit: N·m {ft.lbs, kgf·m})

Mark	Parts to be tightened	Tightening torque	Remarks
Ta	Lock nut of transfer control cable on transfer control lever	28.7 to 38.7 {21 to 29, 2.9 to 3.9}	–
Tb	Lock nut of transfer control cable on transfer body	44 to 59 {32 to 44, 4.5 to 6.0}	–
Tc	Bolt (shift rail cover mounting)	44.5 {33, 4.5}	–

Lubricant and/or sealant

Mark	Points of application	Specified lubricant and/or sealant	Quantity
a	Both ends and fulcrum of transfer gear shift lever	Wheel bearing grease [NLGI No. 2 (Li soap)]	As required
b	Transfer mounting surface of shift rail cover	ThreeBond 1215	As required

◆Installation procedure◆

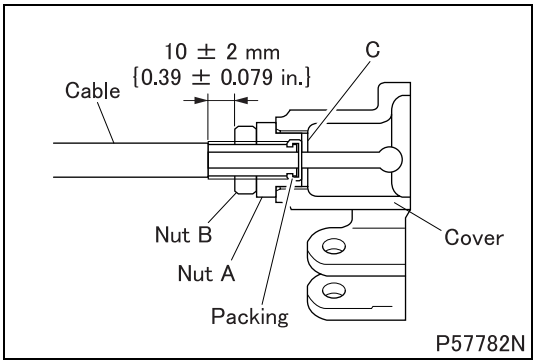

■ Installation: Transfer control cable

- Install the cable in the shift rail cover being careful not to let the packing project from surface C in the cover, and then tighten nut A to the specified torque.
- Tighten nut B to the specified torque and to the dimension indicated in the illustration.

Transfer Control Lever

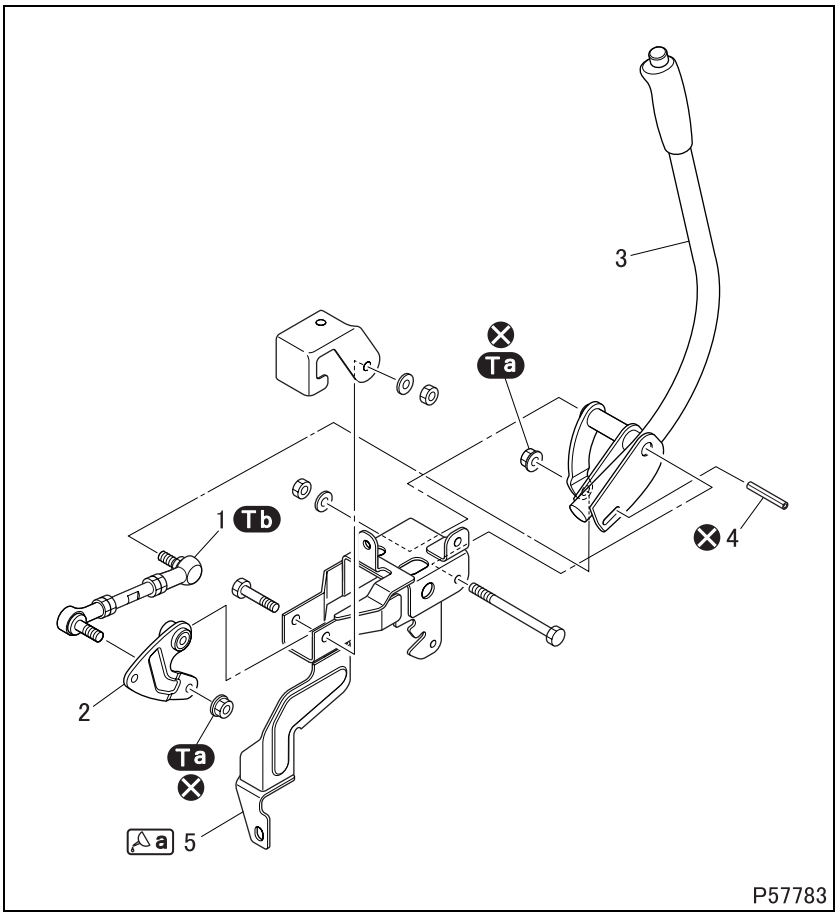

● **Disassembly sequence**

1 Rod
2 Lever
3 Transfer lever
4 Spring pin
5 Transfer control bracket

⊗: Non-reusable parts

● **Assembly sequence**

Follow the disassembly sequence in reverse.

Tightening torque (Unit: N·m {ft.lbs, kgf·m})

Mark	Parts to be tightened	Tightening torque	Remarks
Ta	Nut (rod mounting)	39 to 50 {29 to 37, 4.0 to 5.1}	–
Tb	Lock nut of rod	18.6 to 27.5 {14 to 20, 1.9 to 2.8}	

Lubricant and/or sealant

Mark	Points of application	Specified lubricant and/or sealant	Quantity
a	Spring pin mating area of transfer control bracket	Wheel bearing grease [NLGI No. 2 (Li soap)]	As required

◆**Installation procedure**◆

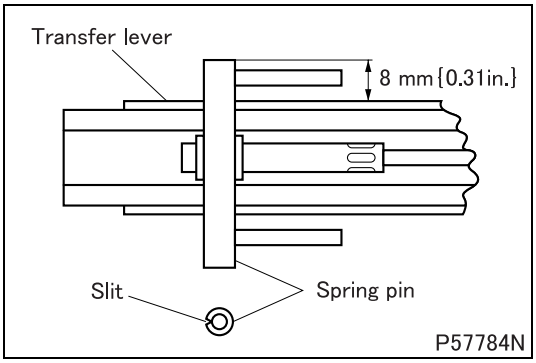

■ **Installation: Spring pin**

- Install the spring pin so that the protruding distance from the transfer lever and the slit direction of the spring pin are as illustrated.

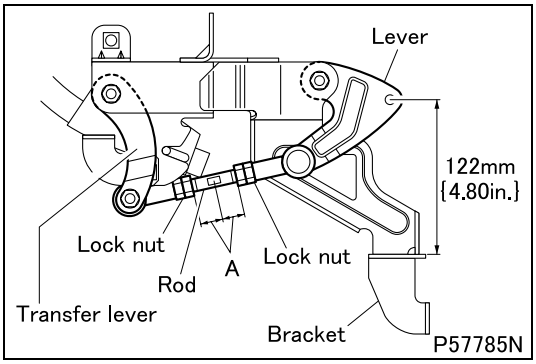

■ **Installation: Rod**

- Install the rod on the lever and transfer lever.
- Loosen the lock nuts on the rod and turn the rod until the distance between the lever and transfer control bracket is as indicated in the illustration. Make sure that distance A in the illustration does not exceed 32.3 mm {1.27 in.}.
- Tighten the lock nuts after the above adjustment.

Group 25

Propeller Shaft

Table of Contents

Back

Home

MITSUBISHI FUSO TRUCK OF AMERICA, Inc.

Pub.No.TWSE0713-25

INDEX

SPECIFICATIONS 25-2

STRUCTURE AND OPERATION
1. Configuration of Propeller Shaft Connection 25-2
2. Propeller Shaft <Without Center Bearing> 25-3
3. Propeller Shaft <With Center Bearing> 25-4

TROUBLESHOOTING 25-5

REMOVAL AND INSTALLATION OF PROPELLER SHAFT
<BETWEEN T/M (OR T/F) AND REAR AXLE> 25-6
<BETWEEN FRONT AXLE AND T/F> 25-8

PROPELLER SHAFT
<P2> 25-10
<P3> 25-16

SPECIFICATIONS / STRUCTURE AND OPERATION

SPECIFICATIONS

Item		Specifications	
		FG <Front axle>	FE, FG
Propeller shaft	Model	P2	P3

STRUCTURE AND OPERATION

1. Configuration of Propeller Shaft Connection

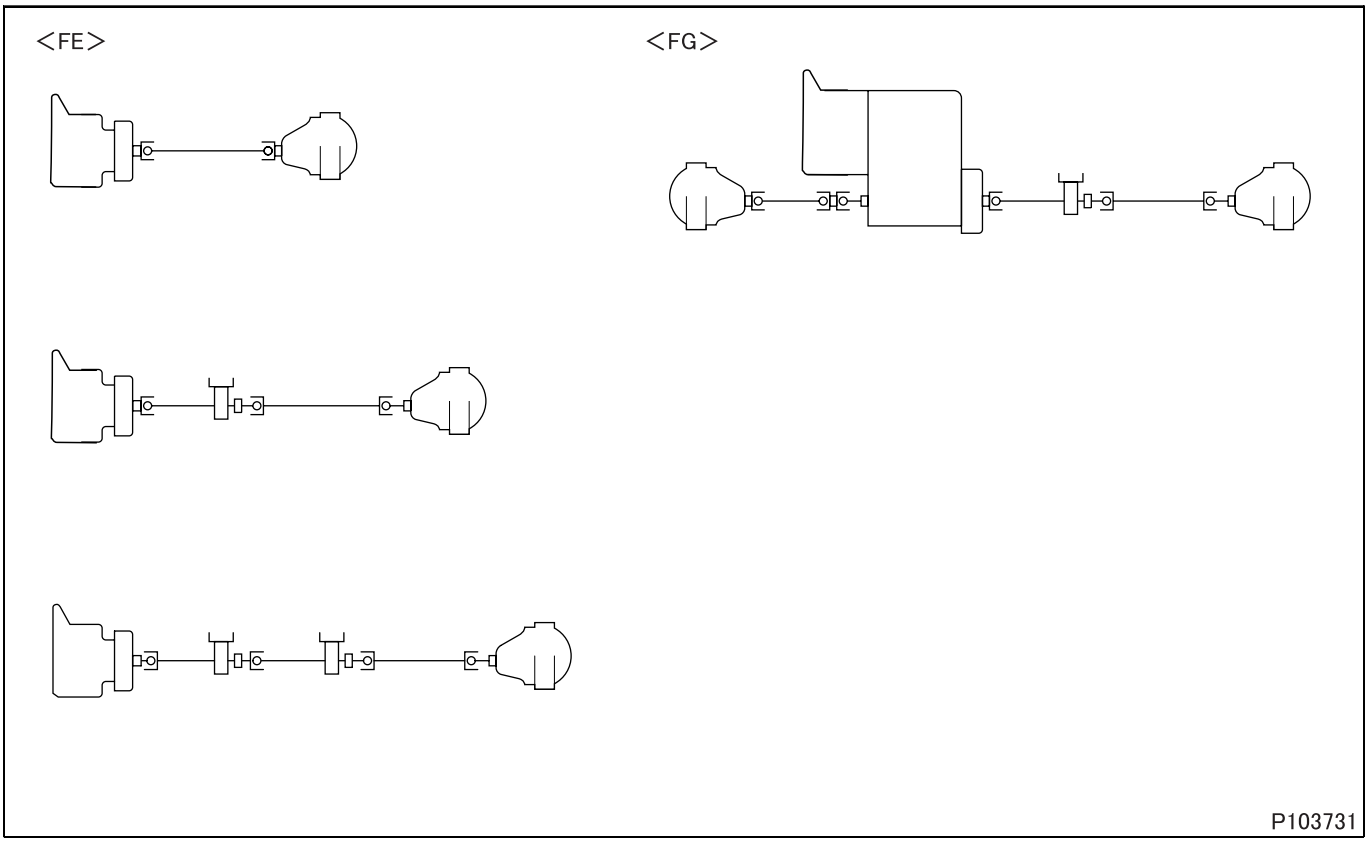

2. Propeller Shaft <Without Center Bearing>

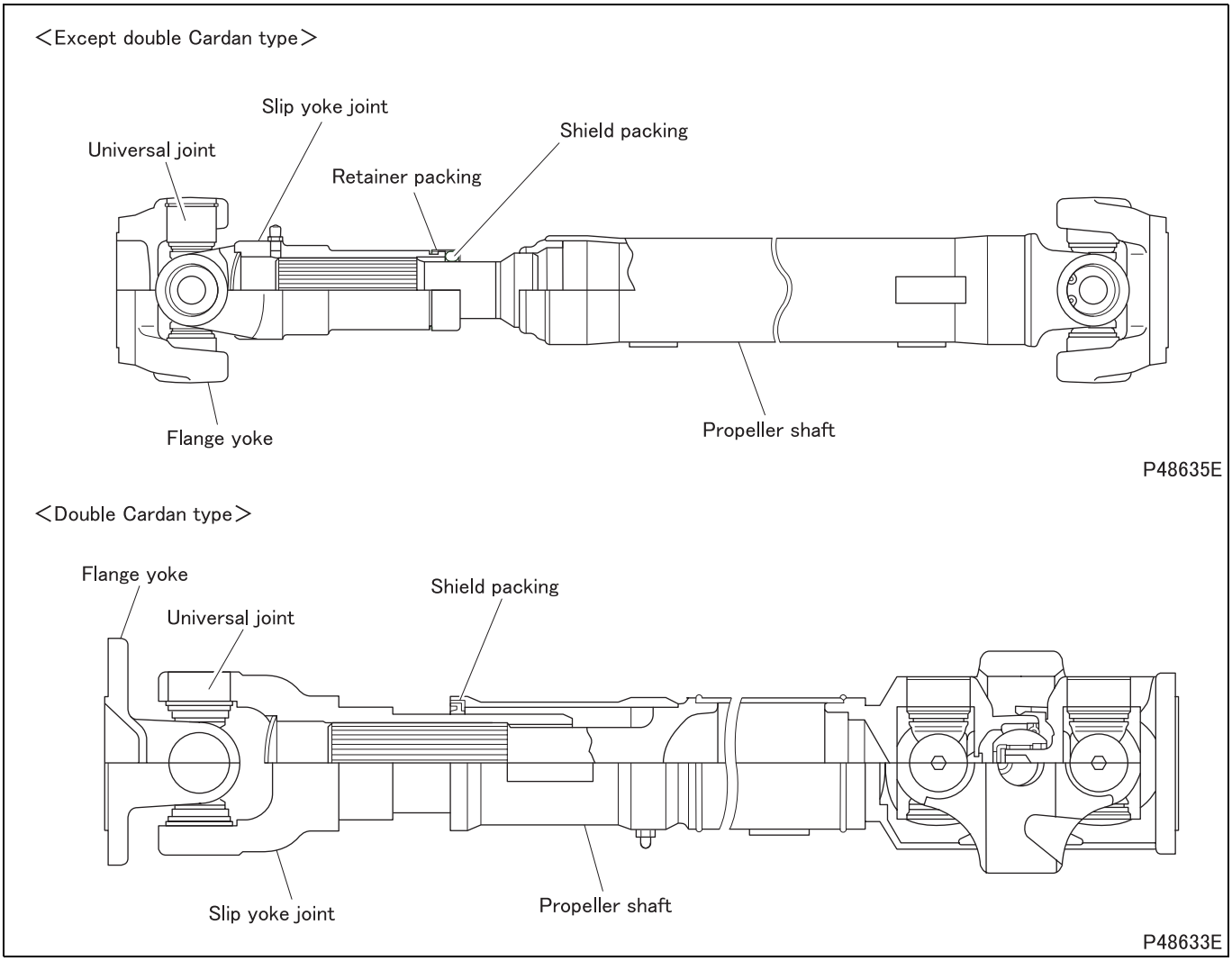

- Propeller shafts used with FG front axles are of double Cardan type suited for suppressing vibrations caused by angle changes in universal joint.

3. Propeller Shaft <With Center Bearing>

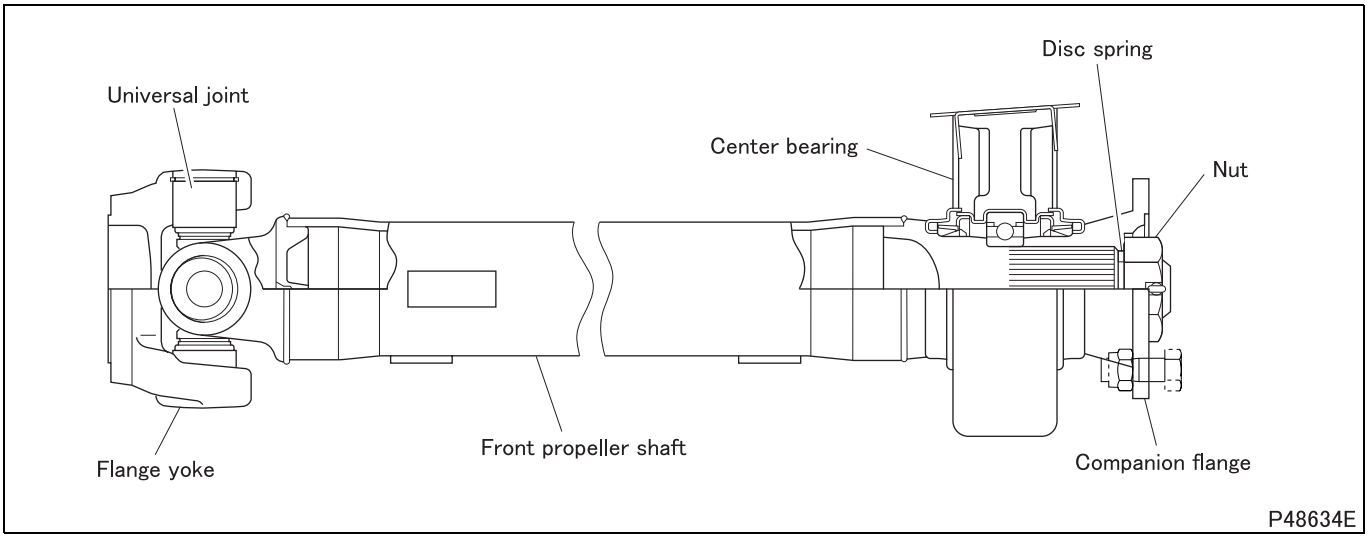

Possible causes \ Symptoms		Propeller shaft vibrates		Abnormal noise from propeller shaft	
		Vibration at high speed	Vibration at low speed	Abnormal noise at acceleration from zero or at coasting	Abnormal noise at normal running
Wrong combination of flange yoke directions		O			
Slip yoke joint	Insufficient grease				O
	Excessive play at spline		O	O	
Universal joint	Excessive clearance in axial direction of spider shaft		O		O
	Insufficient needle bearing greasing				O
	Worn out needle bearing	O		O	O
Center bearing	Insufficient grease				O
	Seizure, wear or improper rotation	O			O
	Deteriorated or deformed cushion rubber			O	
	Loose hanger mounting bolt			O	
Propeller shaft	Loose mounting bolts	O		O	
	Bent	O			
	Dynamic balance improper	O			
Transmission in high speed gear			O		

REMOVAL AND INSTALLATION OF PROPELLER SHAFT <BETWEEN T/M (OR T/F) AND REAR AXLE>

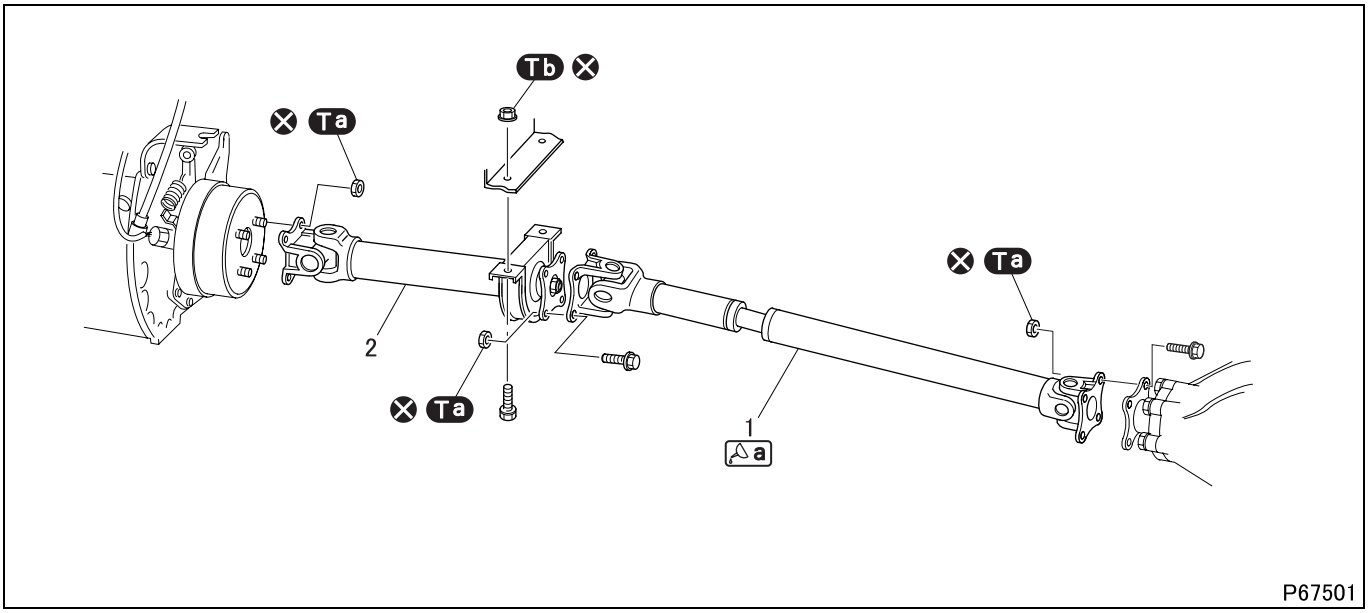

Shown above is a tandem propeller shaft for FE. The illustration applies to other propeller shafts.

● **Removal sequence**

1 Propeller shaft <Without center bearing> (See later section.)
2 Propeller shaft <With center bearing> (See later section.)

⊗: Non-reusable parts

CAUTION ⚠

- **Securely chock the wheels so that the vehicle does not move.**
- **Do not remove the chocks until the entire operation is completed.**

● **Installation sequence**

Follow the removal sequence in reverse.

Tightening torque (Unit: N·m {ft.lbs, kgf·m})

Mark	Parts to be tightened	Tightening torque	Remarks
Ta	Nut (propeller shaft mounting)	100 to 120 {74 to 89, 10 to 12}	–
Tb	Nut (front propeller shaft hanger mounting)	47 to 65 {35 to 48, 4.8 to 6.6}	–

Lubricant and/or sealant

Mark	Points of application	Specified lubricant and/or sealant	Quantity
a	Supply through grease nipple of propeller shaft	Wheel bearing grease [NLGI No. 2 (Li soap)]	As required

◆Work before removal◆

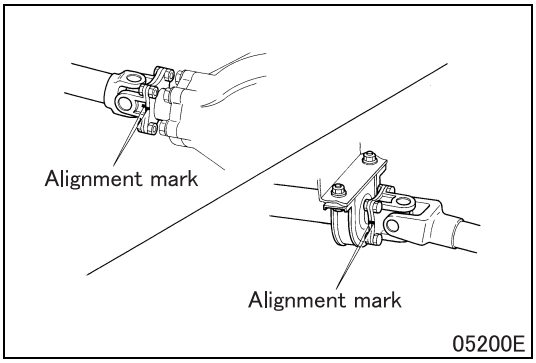

■ Alignment mark: Propeller shaft

- Be sure to make alignment marks before removal.

◆Work after installation◆

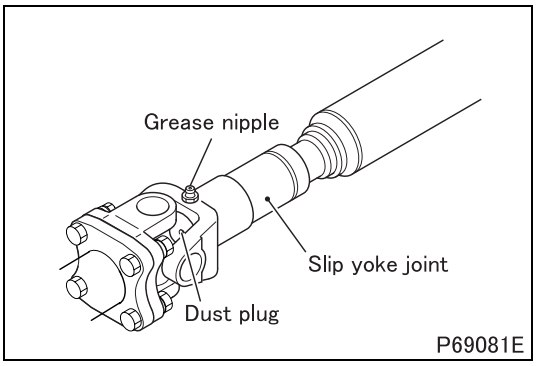

■ Lubrication: Propeller shaft

- Fill grease through grease nipple until clean grease overflows from the hole in dust plug of slip yoke joint.

REMOVAL AND INSTALLATION OF PROPELLER SHAFT <BETWEEN FRONT AXLE AND T/F>

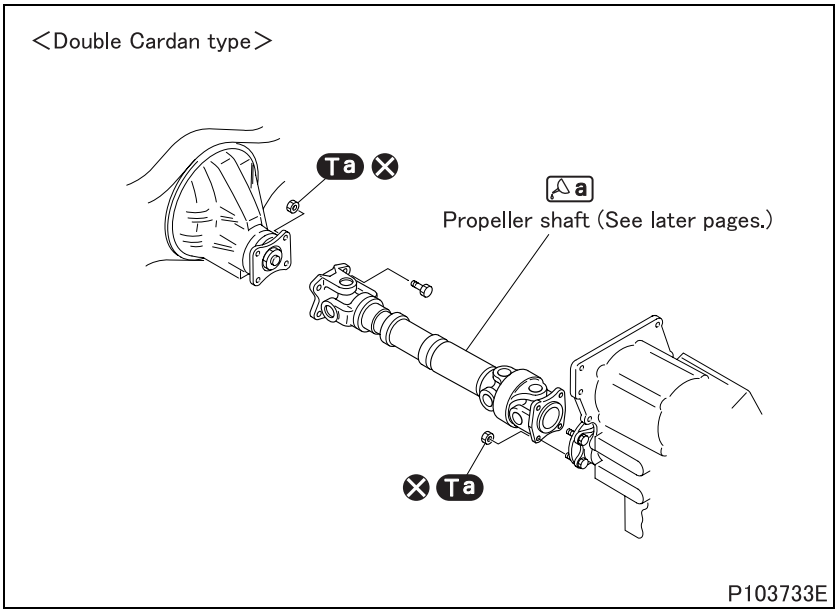

⊗: Non-reusable parts

CAUTION ⚠

- **Securely chock the wheels so that the vehicle does not move.**
- **Do not remove the chocks until the entire operation is completed.**

Tightening torque (Unit: N·m {ft.lbs, kgf·m})

Mark	Parts to be tightened	Tightening torque	Remarks
Ta	Nut (propeller shaft mounting)	60 to 75 {44 to 55, 6.1 to 7.6}	–

Lubricant and/or sealant

Mark	Points of application	Specified lubricant and/or sealant	Quantity
a	Supply through grease nipple of propeller shaft	Wheel bearing grease [NLGI No. 2 (Li soap)]	As required

◆Work before removal◆

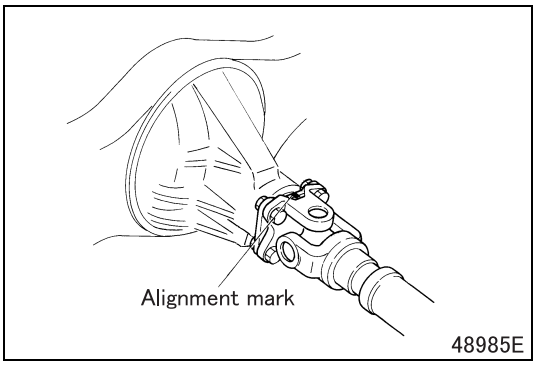

■ Alignment mark: Propeller shaft

- Be sure to make alignment marks before removal.

◆Work after installation◆

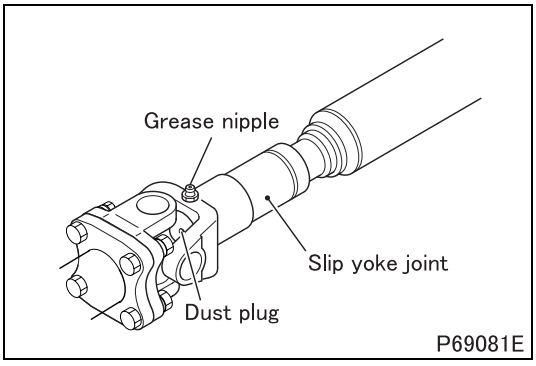

■ Lubrication: Propeller shaft

- Fill grease through grease nipple until clean grease overflows from the hole in dust plug of slip yoke joint.

M E M O

PROPELLER SHAFT <P2>

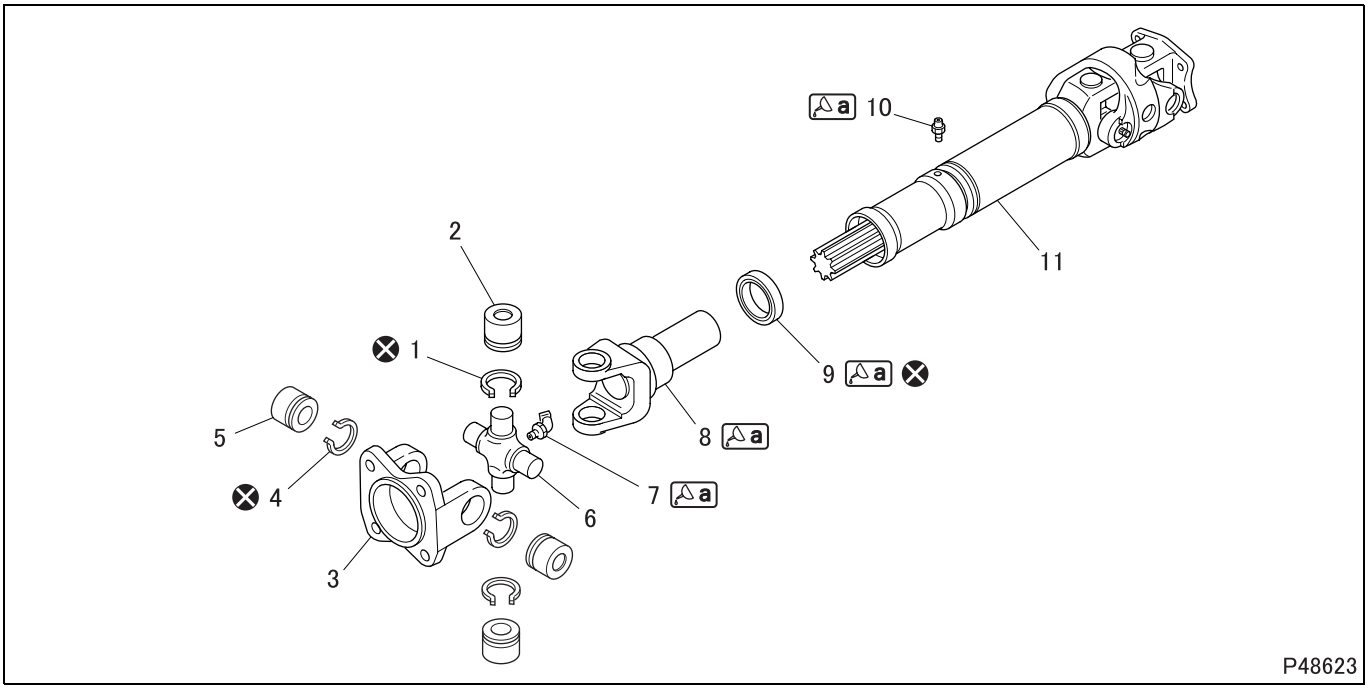

● **Disassembly sequence**

1 Snap ring
2 Needle bearing
3 Flange yoke
4 Snap ring
5 Needle bearing
6 Spider
7 Grease nipple
8 Slip yoke joint
9 Shield packing
10 Grease nipple
11 Propeller shaft

⊗: Non-reusable parts

● **Assembly sequence**

Follow the disassembly sequence in reverse.

Repair kit: Universal joint spider kit

- Be sure to reinstall removed parts at their original positions.
- Correct dynamic balance after replacement of parts.
- Fill grease through the grease nipple of the slip yoke joint after mounting the propeller shaft to the vehicle. (See REMOVAL AND INSTALLATION OF PROPELLER SHAFT.)

Service standards (Unit: mm {in.})

Location	Maintenance item	Standard value	Limit	Remedy
–	Permissible amount of unbalance of propeller shaft	10 g {0.35 oz.} max./3000 rpm (periphery of pipe portion of shaft)	–	Adjust
–	Axial clearance of spider	0 to 0.06 {0 to 0.0024}	–	Adjust
3, 5	Tightness between needle bearing and flange yoke	0.003 to 0.037 {0.00012 to 0.0015}	0.1 {0.0039}	Replace
2, 5, 6	Play between needle bearing and spider	0.02 to 0.05 {0.00079 to 0.0020}	0.1 {0.0039}	Replace
2, 8	Tightness between needle bearing and slip joint	0.003 to 0.037 {0.00012 to 0.0015}	0.1 {0.0039}	Replace
8, 11	Play in rotating direction between slip yoke joint and propeller shaft spline	0.01 to 0.09 {0.00039 to 0.0035}	0.3 {0.012}	Replace
	Play in diametric direction between slip yoke joint and propeller shaft spline	0.02 to 0.16 {0.00079 to 0.0063}	0.3 {0.012}	Replace
11	Bend of propeller shaft	–	0.4 {0.016}	Correct or replace

Lubricant and/or sealant

Mark	Points of application	Specified lubricant and/or sealant	Quantity
a	Supply through grease nipple	Wheel bearing grease [NLGI No. 2 (Li soap)]	As required
	Shield packing contact surface of slip yoke joint		
	Shield packing lips		

Special tools (Unit: mm {in.})

Mark	Tool name and shape	Part No.	Application
a	Universal joint tool set **A:** Yoke assembly **B:** Push rod **C:** Guide **D** ϕ29 {1.14}, **E** ϕ29 {1.14}, **F** ϕ27.7 {1.09} 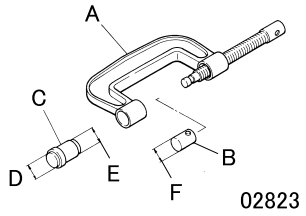	MB999024 A: MB999025 B: MB999026 C: MB999010	Removal and installation of needle bearing

◆Work before removal◆

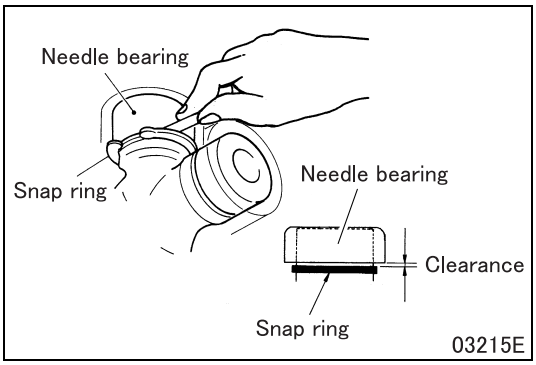

■ Inspection: Axial clearance of spider

- Press down on the needle bearing, and measure clearances between snap ring and flange yoke, slip yoke joint and propeller shaft.
- If measured value exceeds the standard value, change snap ring thickness for adjustment.
  To adjust, use snap rings for both ends with the same thickness. Select optimal combination of snap rings from the table below if necessary.

Variety and combination of snap rings (solid line indicates best combination)

Thickness	Identification color	Combination	Thickness	Identification color
1.5 mm {0.059 in.}	None		1.5 mm {0.059 in.}	None
1.55 mm {0.061 in.}	Yellow		1.55 mm {0.061 in.}	Yellow
1.6 mm {0.063 in.}	Blue		1.6 mm {0.063 in.}	Blue
1.65 mm {0.065 in.}	Purple		1.65 mm {0.065 in.}	Purple

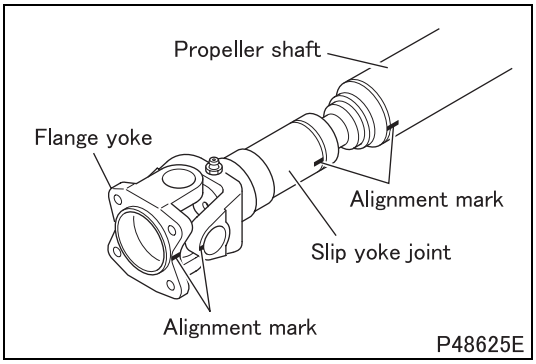

■ **Alignment mark: Propeller shaft**

- To prevent assembly of wrong parts, make alignment marks on flange yoke, slip yoke joint and propeller shaft.

◆Removal procedure◆

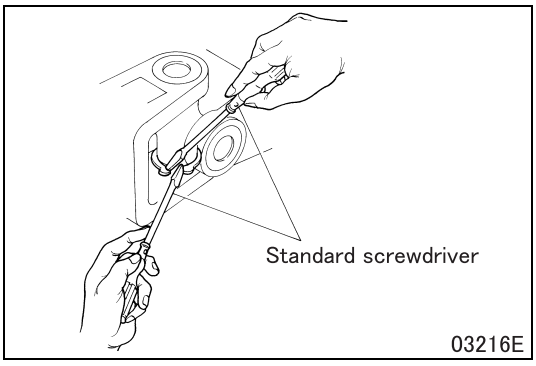

■ **Removal: Snap ring**

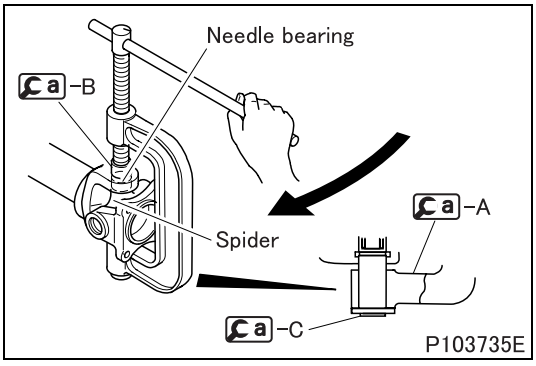

■ **Removal: Needle bearing**

- Fit a -C into a -A from outside.
- Applying a -B to spider, screw a -A to force out spider and remove needle bearing.

◆Inspection procedure◆

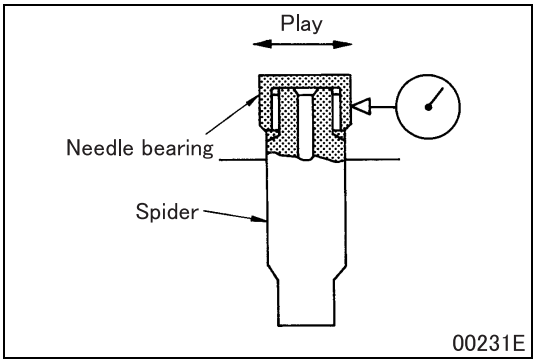

■ **Inspection: Clearance between needle bearing and spider**

- If the measurement exceeds the limit, replace with the universal joint spider kit.

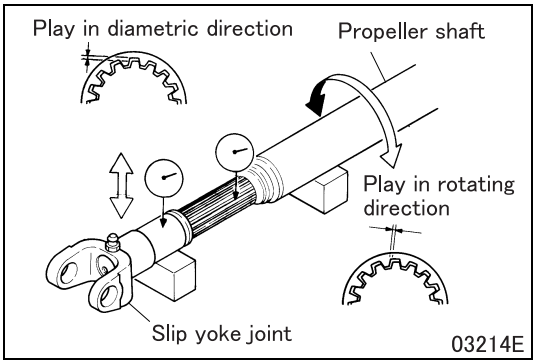

■ **Inspection: Play between slip yoke joint and propeller shaft spline**

- Check the following, and if the measurement is higher than the limit, replace the faulty part.

(1) Play of spline in rotating direction

(2) Play of spline in diametric direction

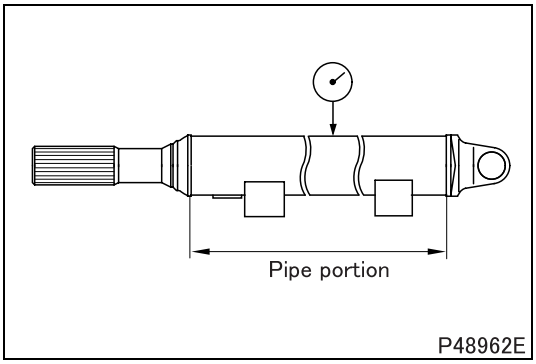

■ **Inspection: Bend of propeller shaft**

- Measure bend of propeller shaft at the center of its pipe portion.
- If the measurement is higher than the limit, correct the bend with a press or replace the propeller shaft.

NOTE

- **To measure the bend of propeller shaft, turn it fully once and read the dial gauge indicator. The bend is one half of the indicated value.**
- **Check the propeller shaft for cracks in the welded area after correcting the bend using a press. If cracking is found, replace the shaft.**

◆Installation procedure◆

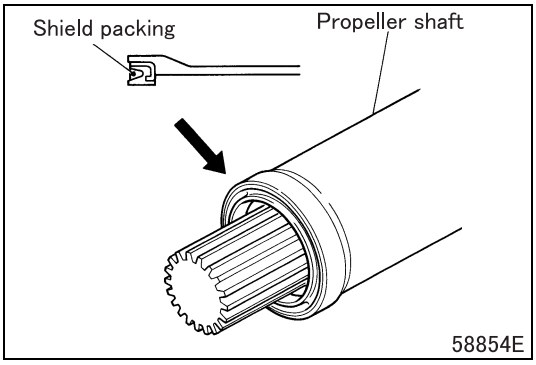

■ **Installation: Shield packing**

- Install shield packing flush onto propeller shaft in the illustrated direction.

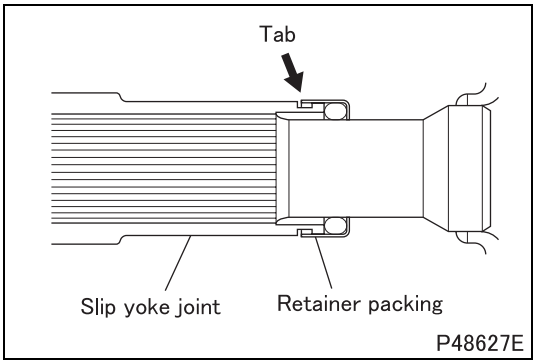

■ **Installation: Retainer packing <Except double Cardan type>**

- Hold retainer packing against slip yoke joint and crimp tabs (at eight places).

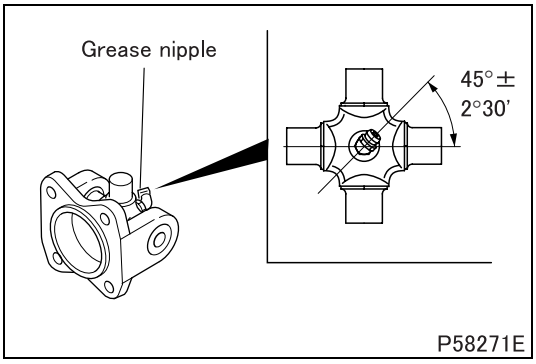

■ **Installation: Grease nipple**

- Install the grease nipple on the spider at an angle conforming to the indication in the illustration.

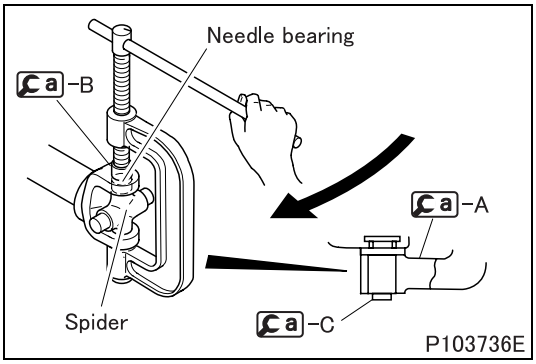

■ **Installation: Needle bearing**

- Fit ⓐ-C into ⓐ-A from inside.
- Operating ⓐ-A, install needle bearing into place.

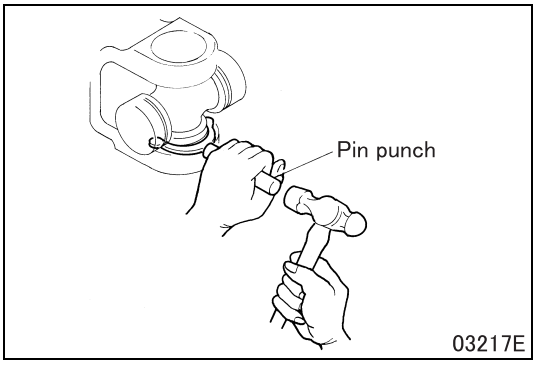

■ **Installation: Snap ring**

◆Work after installation◆

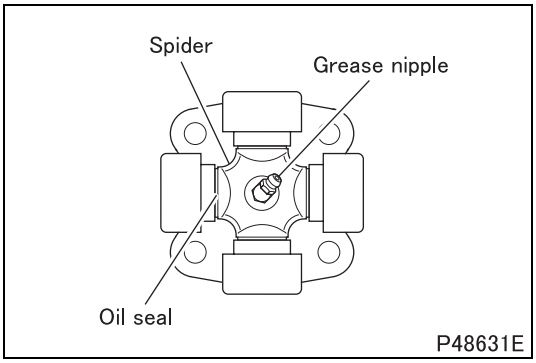

■ **Lubrication: Grease nipple**

- Fill grease through grease nipple until clean grease overflows from all of the four oil seals of spider.
- If grease does not overflow from all of the four oil seals or rust, water and dirt come out with grease, replace the spider with the spider kit.

◆Inspection procedure◆

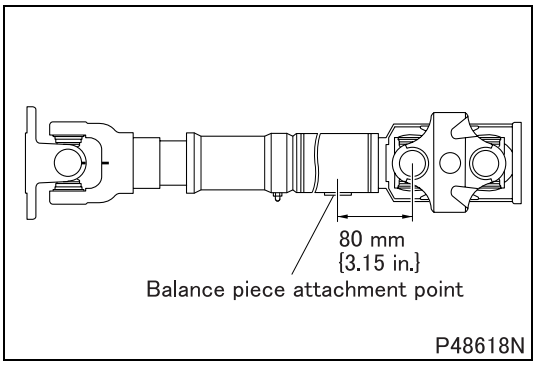

■ **Inspection: Propeller shaft**

[Inspection]

- Measure the amount of balance (dynamic balance) of completed propeller shaft assembly on a balancing machine.
- If measured value exceeds the standard value, make adjustment as follows.

[Adjustment]

- Attach appropriate balance pieces at the illustrated points so that the amount of unbalance comes within the specified standard value.
- Maximum balance piece allowance for one point is 100 g {3.53 oz.}.
- Use a combination that keeps the number of balance pieces to a minimum.

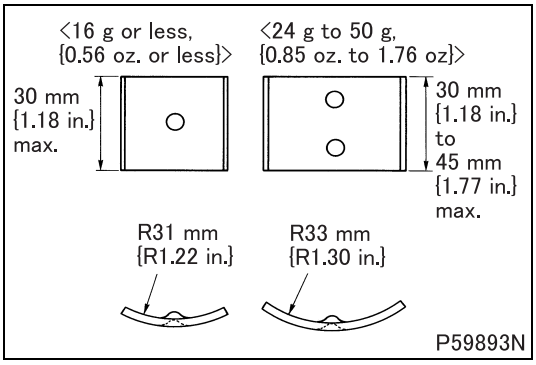

- Available balance pieces

Mass
2 g {0.071 oz.}
4 g {0.14 oz.}
6 g {0.21 oz.}
8 g {0.28 oz.}
10 g {0.35 oz.}
12 g {0.42 oz.}
16 g {0.56 oz.}
24 g {0.85 oz.}
30 g {1.06 oz.}
35 g {1.23 oz.}
40 g {1.41 oz.}
45 g {1.59 oz.}
50 g {1.76 oz.}

PROPELLER SHAFT <P3>

<Without Center Bearing>

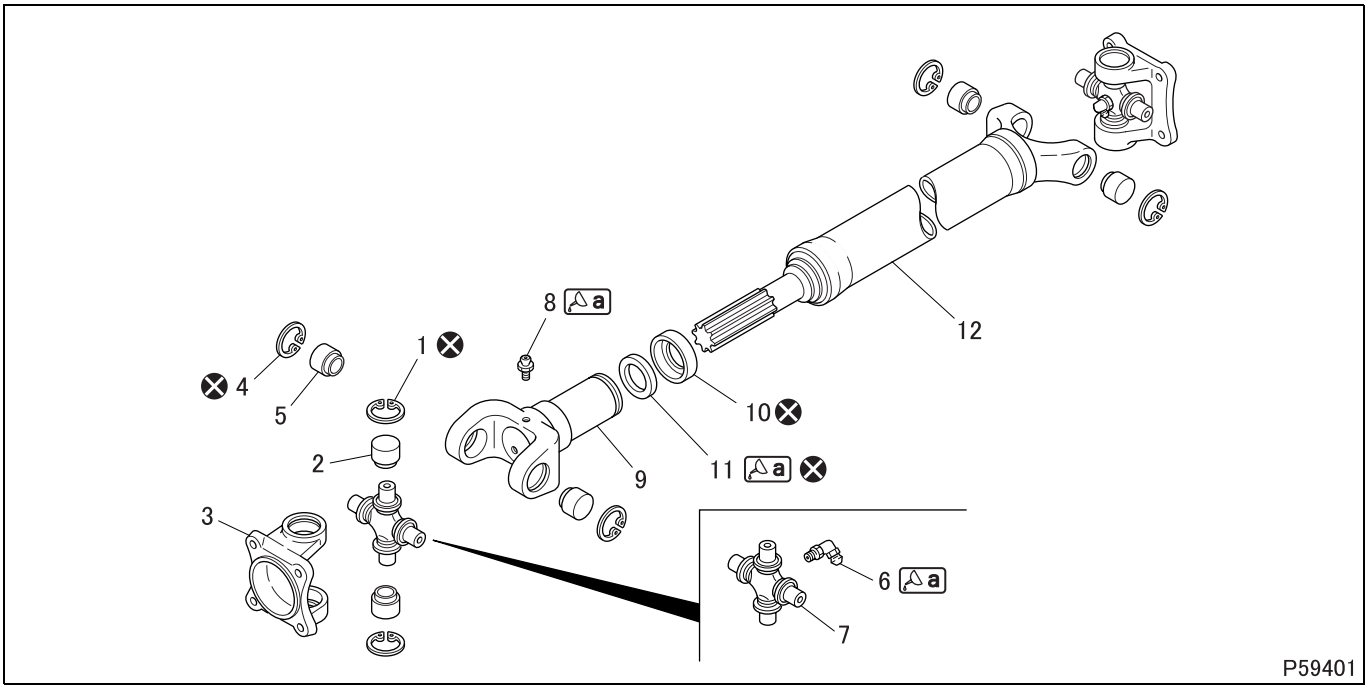

● Disassembly sequence

1 Snap ring
2 Needle bearing
3 Flange yoke
4 Snap ring
5 Needle bearing
6 Grease nipple
7 Spider
8 Grease nipple
9 Slip yoke joint
10 Retainer packing
11 Shield packing
12 Propeller shaft

⊗: Non-reusable parts

● Assembly sequence

Follow the disassembly sequence in reverse, excepting:
12→10→11→9

Repair kit: Universal joint spider kit

- Be sure to reinstall removed parts at their original positions.
- Correct dynamic balance after replacement of parts.
- Fill grease through the grease nipple of the slip yoke joint after mounting the propeller shaft to the vehicle. (See REMOVAL AND INSTALLATION OF PROPELLER SHAFT.)

Service standards (Unit: mm {in.})

Location	Maintenance item	Standard value	Limit	Remedy
–	Permissible amount of unbalance of propeller shaft	10 g {0.35 oz.} max./3000 rpm (periphery of pipe portion of shaft)	–	Adjust
–	Axial clearance of spider	0 to 0.06 {0 to 0.0024}	–	Adjust
2, 3	Clearance between needle bearing and flange yoke	0.008 to –0.033 {0.00031 to –0.0013} "–" means interference.	0.1 {0.0039}	Replace
2, 5, 6	Play between needle bearing and spider	0.01 to 0.06 {0.00039 to 0.0024}	0.1 {0.0039}	Replace
5, 9	Clearance between needle bearing and slip joint	0.008 to –0.033 {0.00031 to –0.0013} "–" means interference.	0.1 {0.0039}	Replace
9, 12	Play in rotating direction between slip yoke joint and propeller shaft spline	0.01 to 0.09 {0.00039 to 0.0035}	0.3 {0.012}	Replace
	Play in diametric direction between slip yoke joint and propeller shaft spline	0.02 to 0.16 {0.00079 to 0.0063}	0.3 {0.012}	Replace
12	Bend of propeller shaft	–	0.4 {0.016}	Correct or replace

Lubricant and/or sealant

Mark	Points of application	Specified lubricant and/or sealant	Quantity
a	Supply through grease nipple	Wheel bearing grease [NGLI No. 2 (Li soap)]	As required
	Shield packing lips		

Special tools (Unit: mm {in.})

Mark	Tool name and shape	Part No.	Application
a	Universal joint tool set **A:** Yoke assembly **B:** Push rod **C:** Guide **D** ϕ29 {1.14}, **E** ϕ29 {1.14}, **F** ϕ27.7 {1.09} 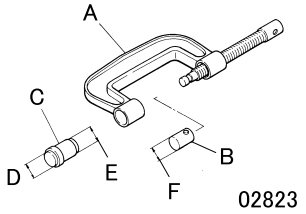	MB999024 A: MB999025 B: MB999026 C: MB999010	Removal and installation of needle bearing

◆Work before removal◆

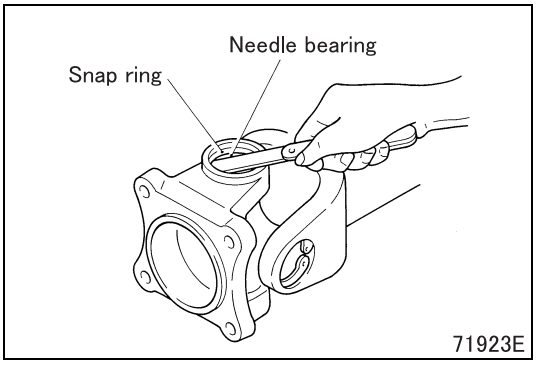

■ Inspection: Axial clearance of spider

- Press down on the needle bearing, and measure clearance between snap ring and needle bearing.
- If measured value exceeds the standard value, change snap ring thickness for adjustment.
  To adjust, use snap rings for both ends with the same thickness. Select optimal combination of snap rings from the table below if necessary.

Variety and combination of snap rings (solid line indicates best combination)

Thickness	Identification color	Combination	Thickness	Identification color
1.49 mm {0.059 in.}	None		1.49 mm {0.059 in.}	None
1.52 mm {0.060 in.}	Black		1.52 mm {0.060 in.}	Black
1.55 mm {0.061 in.}	Blue		1.55 mm {0.061 in.}	Blue
1.58 mm {0.062 in.}	Yellow		1.58 mm {0.062 in.}	Yellow
1.61 mm {0.063 in.}	Purple		1.61 mm {0.063 in.}	Purple
1.64 mm {0.065 in.}	None		1.64 mm {0.065 in.}	None
1.67 mm {0.066 in.}	Black		1.67 mm {0.066 in.}	Black
1.70 mm {0.067 in.}	Blue		1.70 mm {0.067 in.}	Blue

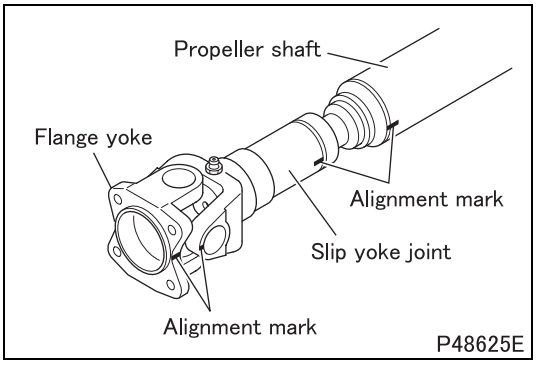

■ **Alignment mark: Propeller shaft**

- To prevent assembly of wrong parts, make alignment marks on flange yoke, slip yoke joint and propeller shaft.

◆Removal procedure◆

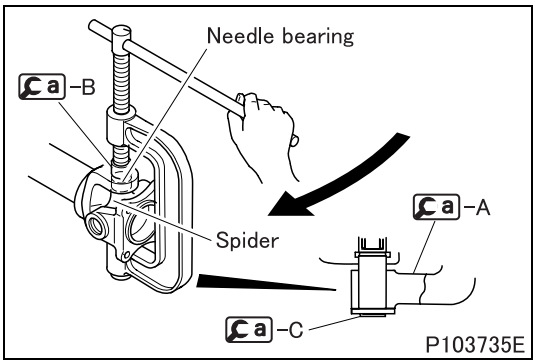

■ **Removal: Needle bearing**

- Fit ca-C into ca-A from outside.
- Applying ca-B to spider, operate ca-A to force out spider and remove needle bearing.

◆Inspection procedure◆

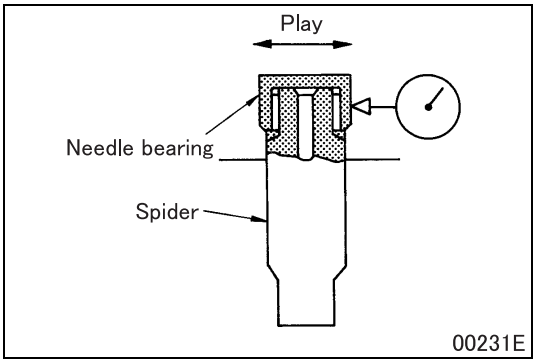

■ **Inspection: Clearance between needle bearing and spider**

- If the measurement is higher than the limit, replace with the universal joint spider kit.

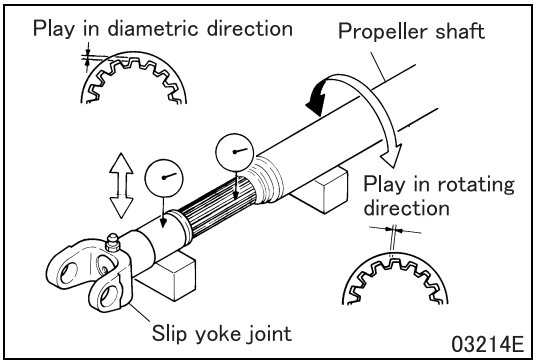

■ **Inspection: Play between slip yoke joint and propeller shaft spline**

- Check the following, and if the measurement is higher than the limit, replace the faulty part.

(1) Play of spline in rotating direction

(2) Play of spline in diametric direction

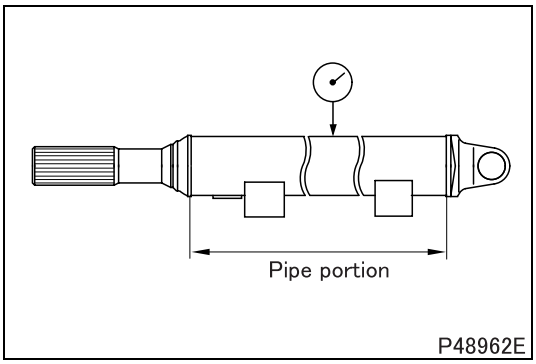

■ **Inspection: Bend of propeller shaft**

- Measure bend of propeller shaft at the center of its pipe portion.
- If the measurement is higher than the limit, correct the bend with a press or replace the propeller shaft.

CAUTION ⚠

- **To measure the bend of propeller shaft, turn it fully once and read the dial gauge indicator. The bend is one half of the indicated value.**
- **Check the propeller shaft for cracks in the welded area after correcting the bend using a press. If cracking is found, replace the shaft.**

◆Installation procedure◆

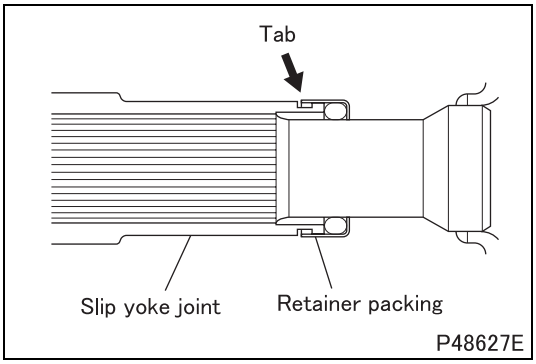

■ **Installation: Retainer packing**

- Hold retainer packing against slip yoke joint and caulk tabs (at eight places).

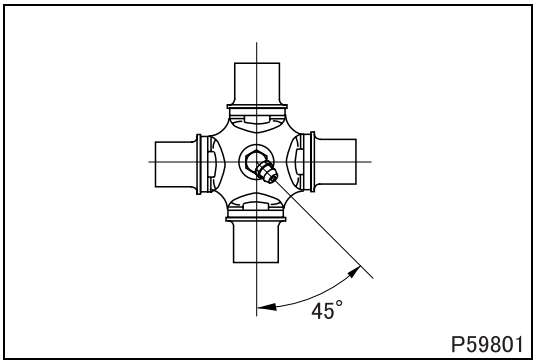

■ **Installation: Spider**

- Install the grease nipple on the spider at an angle conforming to the indication in the illustration.

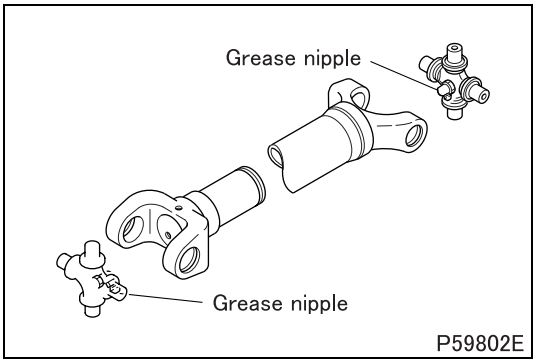

- Install the spiders on the both ends of propeller shaft so that the direction of grease nipples must be the same.

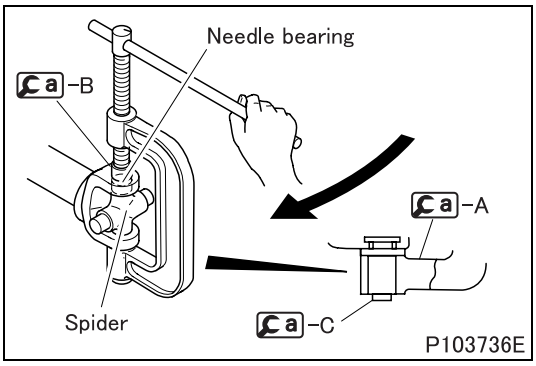

■ **Installation: Needle bearing**

- Fit a -C into a -A from inside.
- Operating a -A, install needle bearing into place.

◆Work after installation◆

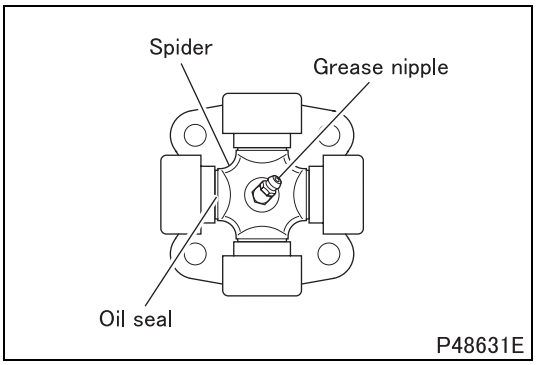

■ **Lubrication: Grease nipple**

- Fill grease through grease nipple until clean grease overflows from all of the four oil seals of spider.
- If grease does not overflow from all of the four oil seals or rust, water and dirt come out with grease, replace the spider with the spider kit.

◆Inspection procedure◆

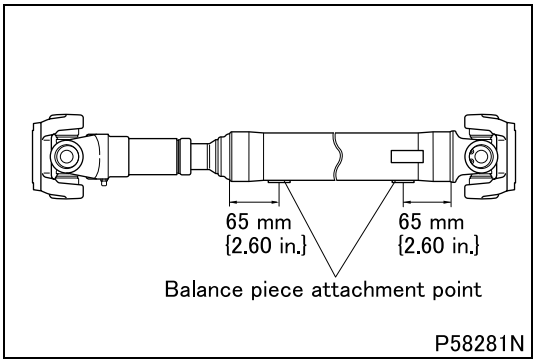

■ Inspection: Propeller shaft

[Inspection]

- Measure the amount of balance (dynamic balance) of completed propeller shaft on a balancing machine.
- If measured value exceeds the standard value, make adjustment as follows.

[Adjustment]

- Attach appropriate balance pieces at the illustrated points so that the amount of unbalance comes within the specified standard value.
- Maximum balance piece allowance for one point is 100 g {3.53 oz.}.
- Use a combination that keeps the number of balance pieces to a minimum.

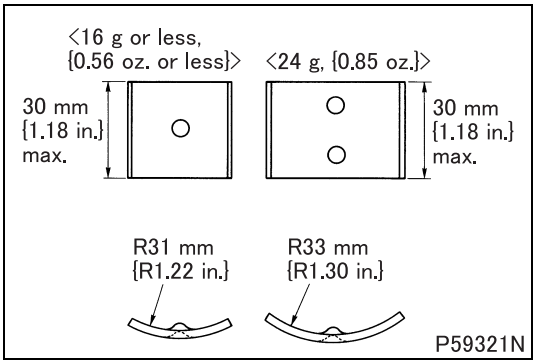

Available balance pieces

Mass
2 g {0.071 oz.}
4 g {0.14 oz.}
6 g {0.21 oz.}
8 g {0.28 oz.}
10 g {0.35 oz.}
12 g {0.42 oz.}
16 g {0.56 oz.}
24 g {0.85 oz.}

PROPELLER SHAFT <P3>

<With Center Bearing>

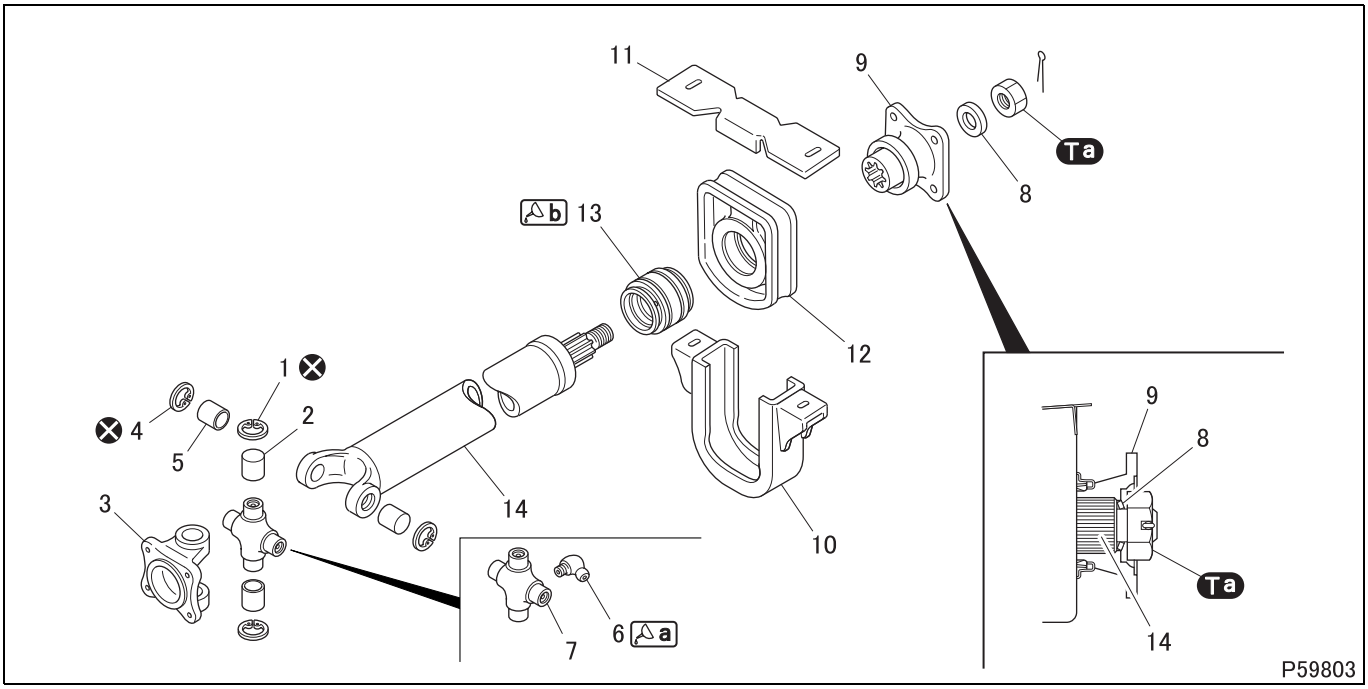

● Disassembly sequence

1 Snap ring
2 Needle bearing
3 Flange yoke
4 Snap ring
5 Needle bearing
6 Grease nipple
7 Spider
8 Washer
9 Companion flange
10 Holder
11 Hanger
12 Cushion rubber
13 Center bearing
14 Propeller shaft

⊗: Non-reusable parts

● Assembly sequence

Follow the disassembly sequence in reverse.

Repair kit: Universal joint spider kit

- Be sure to reinstall removed parts at their original positions.
- Correct dynamic balance after replacement of parts.

Service standards (Unit: mm {in.})

Location	Maintenance item	Standard value	Limit	Remedy
–	Permissible amount of unbalance of propeller shaft	5 g {0.18 oz.} max./3000 rpm (periphery of pipe portion of shaft)	–	Adjust
–	Axial clearance of spider	0 to 0.06 {0 to 0.0024}	–	Adjust
2, 3	Clearance between needle bearing and flange yoke	0.008 to –0.033 {0.00031 to –0.0013} "–" means interference.	0.1 {0.0039}	Replace
2, 5, 6	Play between needle bearing and spider	0.01 to 0.06 {0.00039 to 0.0024}	0.1 {0.0039}	Replace
5, 14	Clearance between needle bearing and propeller shaft	0.008 to –0.033 {0.00031 to –0.0013} "–" means interference.	0.1 {0.0039}	Replace
14	Bend of propeller shaft	–	0.4 {0.016}	Correct or replace

Tightening torque (Unit: N·m {kgf·m})

Mark	Parts to be tightened	Tightening torque	Remarks
Ta	Nut (companion flange mounting)	290 to 390 {215 to 285, 30 to 40}	–

Lubricant and/or sealant

Mark	Points of application	Specified lubricant and/or sealant	Quantity
a	Supply through grease nipple	Wheel bearing grease [NLGI No. 2 (Li soap)]	As required
b	Fill space in center bearing housing	Heat-resisting grease [NLGI No. 3]	70 to 100% of space capacity (20 to 29 g) {0.71 to 1.0 oz.}
	Center bearing seal lips		As required

Special tools (Unit: mm {in.})

Mark	Tool name and shape	Part No.	Application
Ca	Universal joint tool set **A:** Yoke assembly **B:** Push rod **C:** Guide **D** ϕ29 {1.14}, **E** ϕ29 {1.14}, **F** ϕ27.7 {1.09} 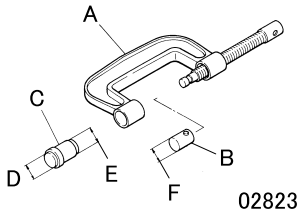	MB999024 A: MB999025 B: MB999026 C: MB999010	Removal and installation of needle bearing

◆Work before removal◆

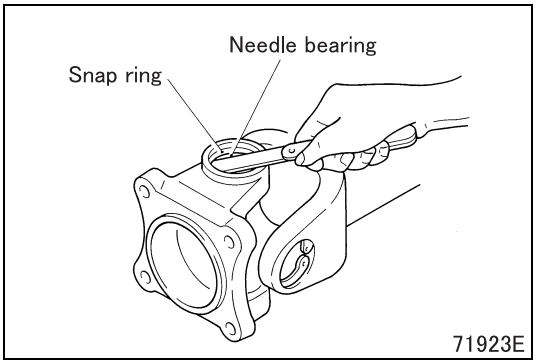

■ Inspection: Axial clearance of spider

- Press down on the needle bearing, and measure clearance between snap ring and needle bearing.
- If measured value exceeds the standard value, change snap ring thickness for adjustment.
  To adjust, use snap rings for both ends with the same thickness. Select optimal combination of snap rings from the table below if necessary.

Variety and combination of snap rings (solid line indicates best combination).

Thickness	Identification color	Combination	Thickness	Identification color
1.49 mm {0.059 in.}	None		1.49 mm {0.059 in.}	None
1.52 mm {0.060 in.}	Black		1.52 mm {0.060 in.}	Black
1.55 mm {0.061 in.}	Blue		1.55 mm {0.061 in.}	Blue
1.58 mm {0.062 in.}	Yellow		1.58 mm {0.062 in.}	Yellow
1.61 mm {0.063 in.}	Purple		1.61 mm {0.063 in.}	Purple
1.64 mm {0.065 in.}	None		1.64 mm {0.065 in.}	None
1.67 mm {0.066 in.}	Black		1.67 mm {0.066 in.}	Black
1.70 mm {0.067 in.}	Blue		1.70 mm {0.067 in.}	Blue

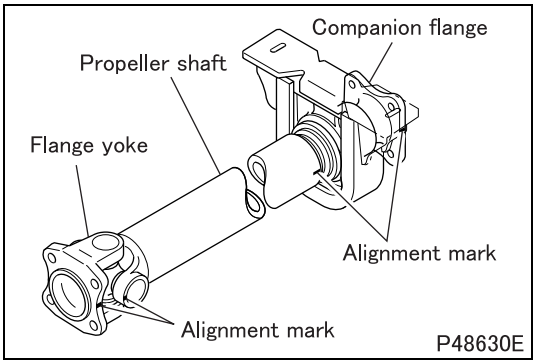

■ **Alignment mark: Propeller shaft**

- To prevent assembly of wrong parts, make alignment marks on flange yoke, companion flange and propeller shaft.

◆Removal procedure◆

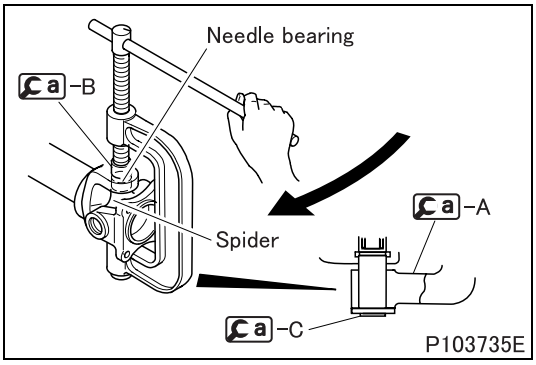

■ **Removal: Needle bearing**

- Fit a -C into a -A from outside.
- Applying a -B to spider, operate a -A to force out spider and remove needle bearing.

◆Inspection procedure◆

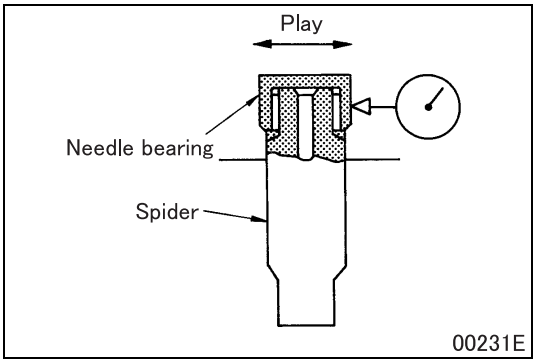

■ **Inspection: Clearance between needle bearing and spider**

- If the measurement is higher than the limit, replace with the universal joint spider kit.

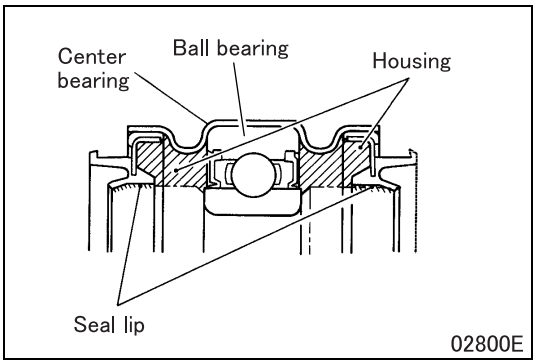

■ **Inspection: Center bearing**

- Check at every 50,000 km {31070 mile} or each official vehicle inspection. If excessive grease outflow is evident, pack grease in center bearing housing up to 70 to 100% (20 to 29 g {0.71 to 1.02 oz.}) of space capacity.
- Apply grease to seal lips.

NOTE

- **The ball bearing portion of center bearing is provided with oil seal and requires no supply of grease.**

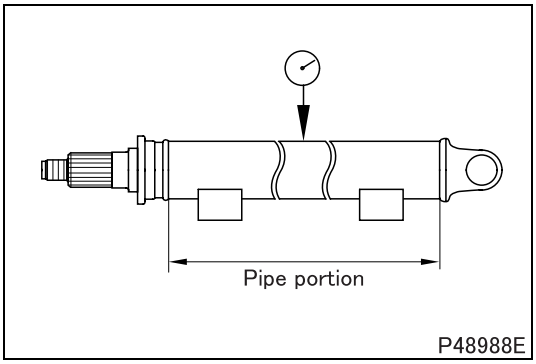

■ **Inspection: Bend of propeller shaft**

- Measure end of propeller shaft at the center of its pipe portion.
- If the measurement is higher than the limit, correct the bend with a press or replace propeller shaft.

NOTE

- **To measure the bend of propeller shaft, turn it fully once and read the dial gauge indicator. The bend is one half of the indicated value.**
- **Check propeller shaft for cracks in welded area after correcting the bend with a press. If cracking is found, replace propeller shaft.**

◆Installation procedure◆

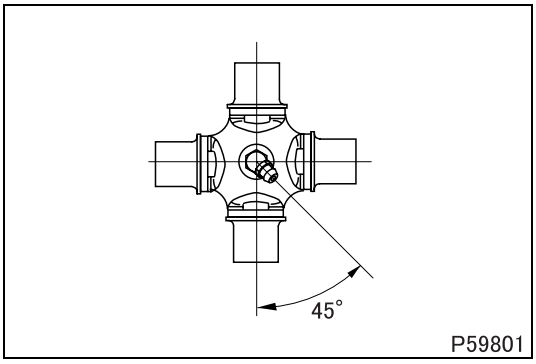

■ **Inspection: Grease nipple**

- Install the grease nipple on the spider at an angle conforming to the indication in the illustration.

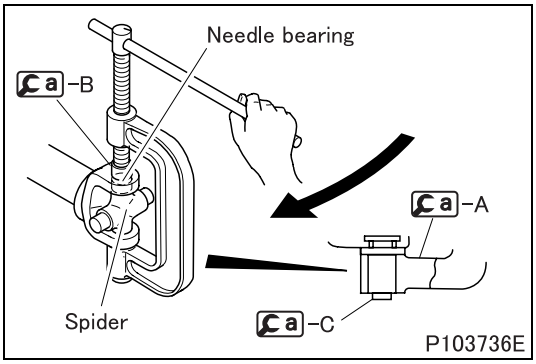

■**Installation: Needle bearing**

- Fit Ⓐ-C into Ⓐ-A from inside.
- Operating Ⓐ-A, install needle bearing into place.

◆**Work after installation**◆

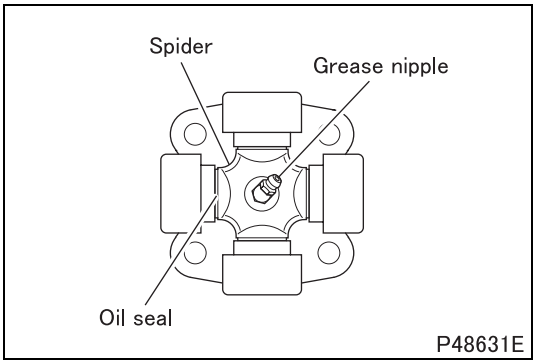

■ **Lubrication: Grease nipple**

- Fill grease through grease nipple until grease overflows from oil seal of spider.

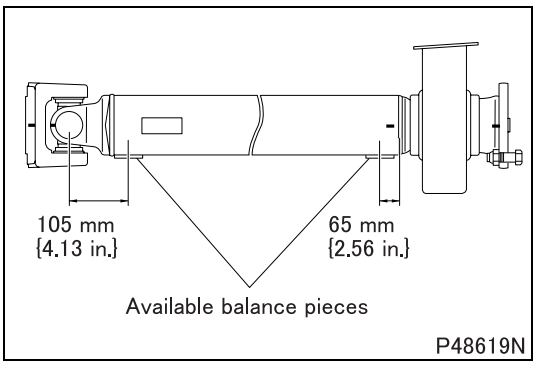

■ **Inspection: Propeller shaft**

[Inspection]

- Measure the amount of balance (dynamic balance) of completed propeller shaft on a balancing machine.
- If measured value exceeds the standard value, make adjustment as follows.

[Adjustment]

- Attach appropriate balance pieces at the illustrated points so that the amount of unbalance comes within the standard value.
- Maximum balance piece allowance for one point is 100 g {3.53 oz.}.
- Use a combination that keeps the number of balance pieces to a minimum.

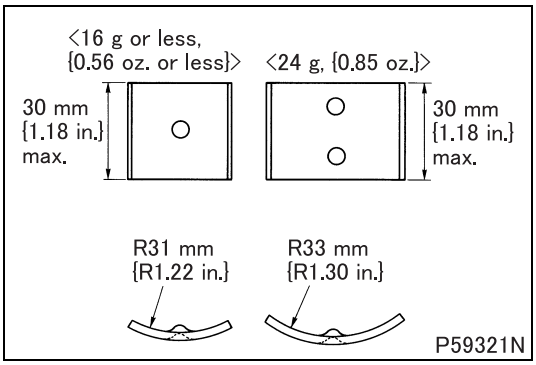

Available balance pieces

Mass
2 g {0.071 oz.}
4 g {0.14 oz.}
6 g {0.21 oz.}
8 g {0.28 oz.}
10 g {0.35 oz.}
12 g {0.42 oz.}
16 g {0.56 oz.}
24 g {0.85 oz.}

Group 26A

Front Axle <FE>

Table of Contents

Back

Home

MITSUBISHI FUSO TRUCK OF AMERICA, Inc.

Pub.No.TWSE0805-26A

INDEX

SPECIFICATIONS 26A-2

STRUCTURE AND OPERATION
1. **Wheel Hub and Rotor 26A-3**
2. **Knuckle and Kingpin, Front Axle 26A-4**

TROUBLESHOOTING 26A-5

ON-VEHICLE INSPECTION AND ADJUSTMENT
1. **Inspection and Adjustment of Wheel Alignment 26A-6**
2. **Inspection and Adjustment of Steering Angle 26A-10**
3. **Inspection of Side Slip 26A-11**
4. **Inspection of Tie Rod End Ball Joint 26A-11**

WHEEL HUB AND ROTOR 26A-12

KNUCKLE AND KINGPIN, FRONT AXLE 26A-22

TIE ROD 26A-30

SPECIFICATIONS

Item			Specifications		
			FE83	FE84	FE85
Front axle	Model		F200T	F300T	F350T
	Type		Reverse Elliot, “I” beam		
Kingpin Outer diameter × Length		mm {in.}	28 × 180 {1.10 × 7.09}		
Tread (dimension notified to the authorities)		mm {in.}	1665 {65.6}		
Mass (with disc brakes)		kg {lb}	Approx. 150 {331}	Approx. 155 {342}	Approx. 165 {365}

1. Wheel Hub and Rotor

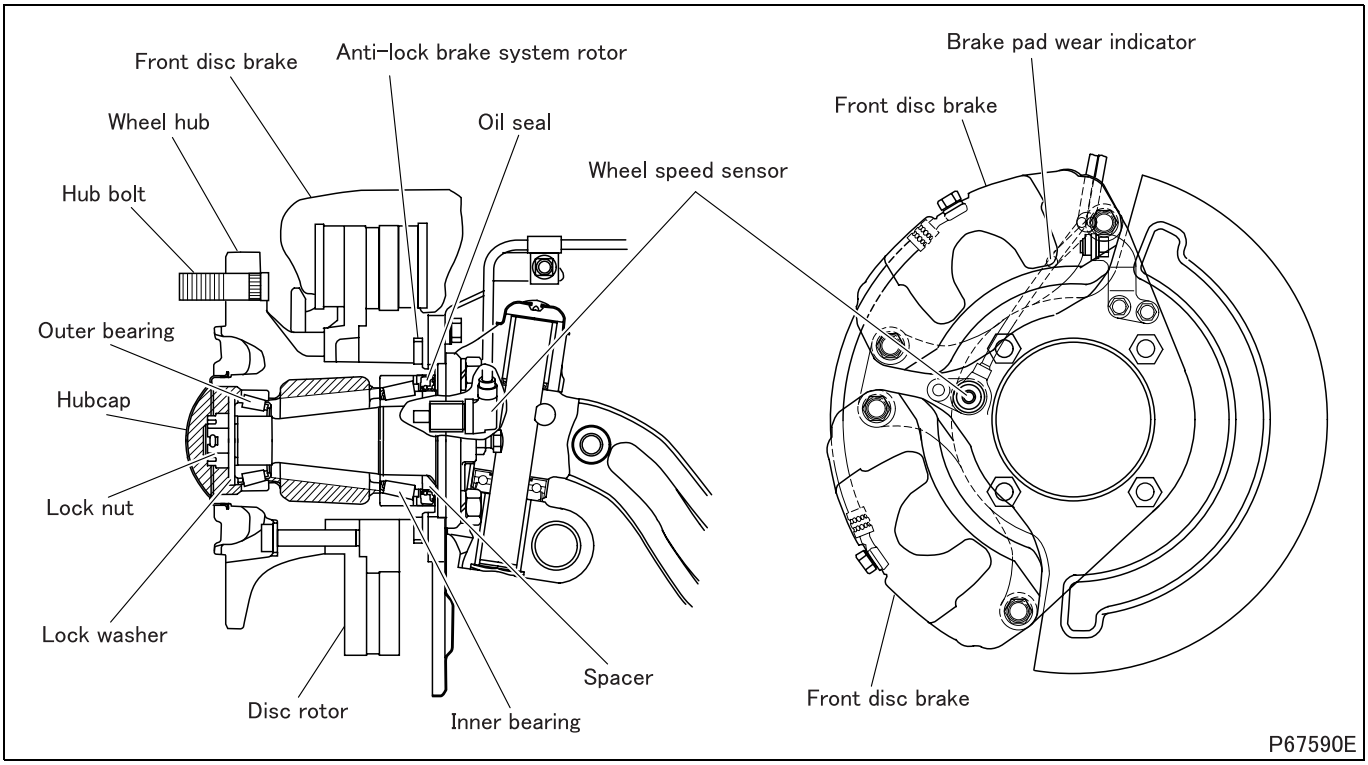

- The brake pad wear indicator is installed on the right wheels or on both the right and left wheels.

2. Knuckle and Kingpin, Front Axle

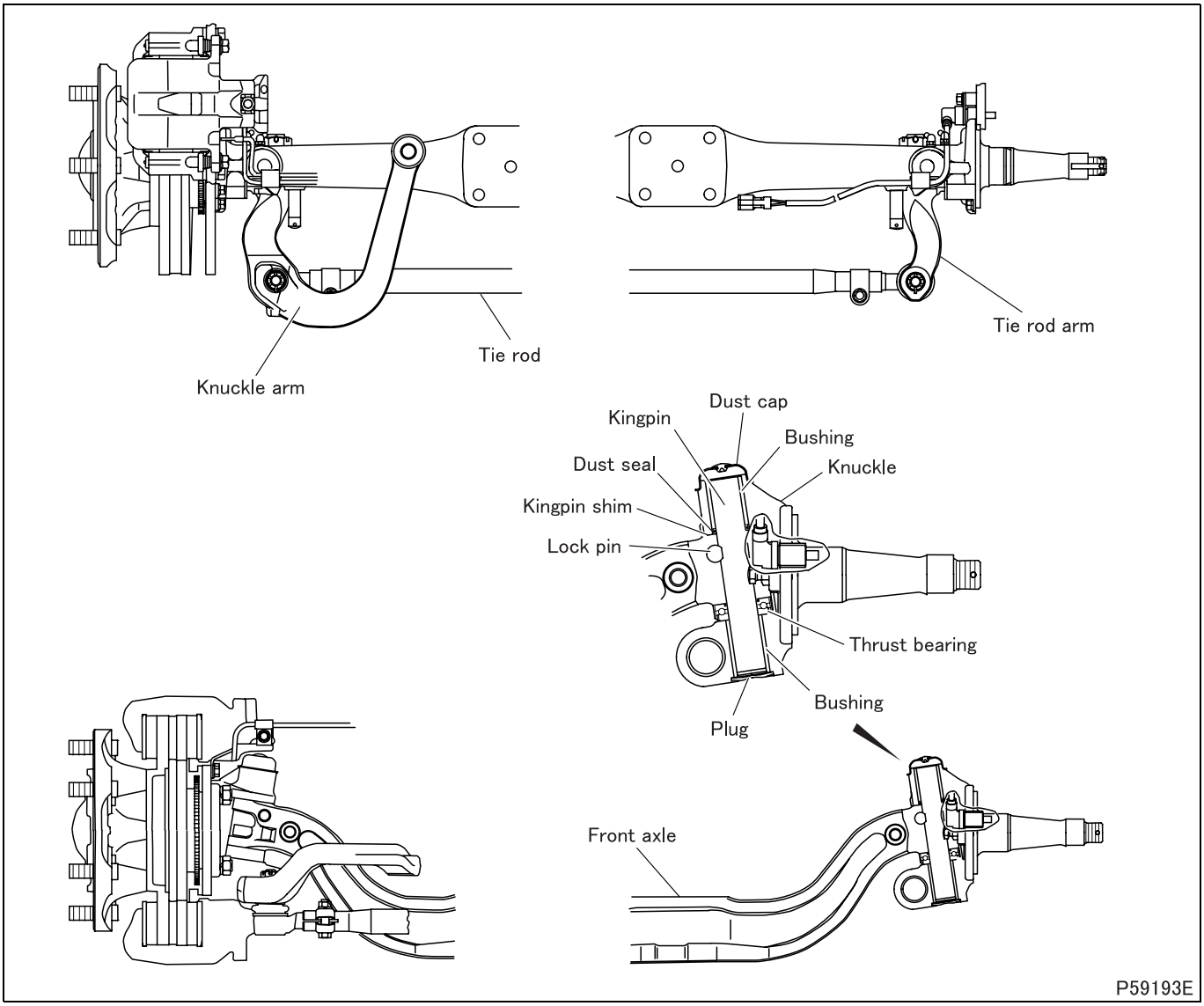

Possible causes	Symptoms	Continuous noise while cruising	Intermittent noise while cruising	Steering wheel shakes	Steering feels stiff	Steering wheel return poor	Unable to steer the steering wheel	Steering pulls to one side	Uneven wear or early wear of front tires	Reference Gr
Wheel hub, knuckle and kingpin, front axle	Wheel alignment misaligned			O	O	O			O	
	Steering angle adjustment faulty						O			
	Wheel hub bearing seized, worn or rotation faulty	O		O						
	Wheel hub bearing broken		O							
	Kingpin worn			O						
	Clearance between kingpin and kingpin bushing excessive			O	O					
	Greasing to kingpin insufficient				O					
	Kingpin thrust bearing seized, worn or rotation faulty				O					
	Vertical clearance between knuckle and front axle excessive			O						
	Knuckle arm and tie rod arm tightening nuts loose			O						
	Ball stud tightening nut of tie rod end loose			O						
	Tie rod end ball stud worn			O						
	Tie rod bent						O			
	Knuckle bent							O		
	Front axle bent							O		
	Various parts of front axle tightened excessively					O				
Front suspension	U-bolt nut of front suspension loose			O						Gr33
	One of front springs worn-out or broken							O		
Tire	Tire inflation pressure uneven			O					O	Gr31
	Tire inflation pressure too little				O					
	Inflation pressure uneven for right and left tires							O		
	Size and type of right and left tires different							O	O	
	Outer diameters of right and left tires remarkably different							O		
	Handling of tires inadequate								O	

ON-VEHICLE INSPECTION AND ADJUSTMENT

1. Inspection and Adjustment of Wheel Alignment

Before carrying out inspection and adjustment of wheel alignment, set the vehicle to the following condition.

- Park the vehicle unloaded on a level place.
- The vehicle needs to be equipped with proper size tires.
- If the wear condition of tires on the right is remarkably different from that of tires on the left, replace tires.
- Tires need inflation to specified pressure.
- Correct if the vehicle tilts due to faulty suspension.
- Service all parts of the front axle and ensure that there is no fault such as the following.
  - Play at or loose kingpin
  - Loose front wheel hub
  - Loose bolts used for tightening various parts of tie rod arm, knuckle arm and tie rod
  - Bend of knuckle and front axle
- Adjust play at steering wheel properly.
- For wheel alignment, which is related to the side slip amount, both wheel alignment and the side slip amount must conform to the standard values.

Service standards (Unit: mm {in.})

Location	Maintenance item	Standard value	Limit	Remedy
–	Toe-in	0 to 6 (3 ± 3) {0 to 0.24 (0.12 ± 0.12)}	–	Adjust
	Camber	1°00 ± 1°00’	–	*
	Caster	1°15’ ± 45’	–	Replace
	Kingpin inclination angle	8° ± 30’	–	Replace

*: If the measured value deviates from the standard value, abnormalities such as wear of kingpin and kingpin bushing, loose hub bearing, and bend of knuckle and front axle are suspected. Inspect each part and replace defective parts.

Tightening torque (Unit: N·m {ft.lbs, kgf·m})

Mark	Parts to be tightened	Tightening torque	Remarks
–	Clamp nut (tie rod end clamp fastening)	25 ± 5 {18 ± 3.6, 2.5 ± 0.5}	–
–	Alignment gauge adapter	113 ± 15 {83 ± 11, 11.5 ± 1.5}	–

Special tools (Unit: mm {in.})

Mark	Tool name and shape	Part No.	Application
a	Hubcap wrench 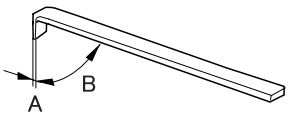 P49261 **A**: 0.5 {0.020} **B**: 78°	MB999108	Removal of hubcap
b	Alignment gauge adapter 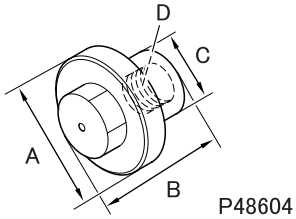 P48604 **A**: φ80 {3.15} **B**: 69 {2.72} **C**: φ45 {1.77} **D**: M24 × 1.5	MH063428	Measurement of camber, caster and kingpin inclination angle

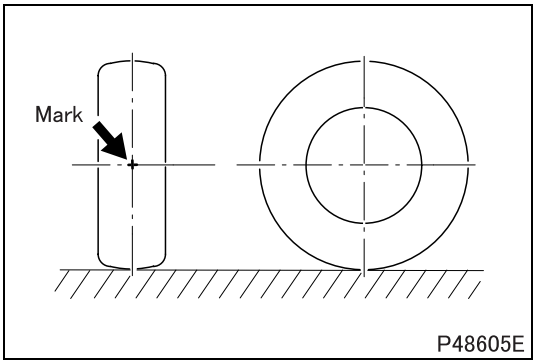

1.1 Inspection and adjustment of toe-in

[Inspection]

- Direct the front wheels exactly to forward running position.
- Put a mark to each tire of right and left at the height of front wheel axis and in the middle of tire width.

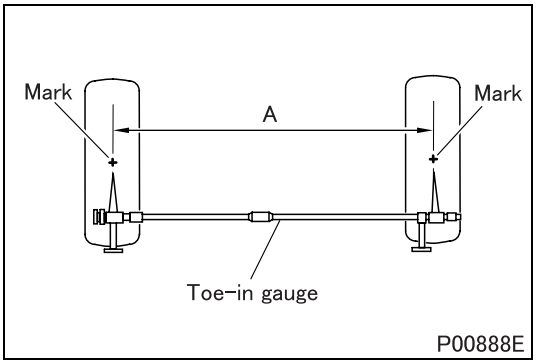

- Align the two points of the toe-in gauge with respective marks and measure distance A between the marks.

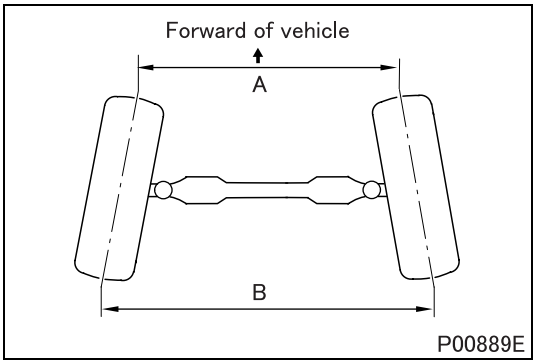

- Push the vehicle to roll the tires 180 degrees.
- Measure distance B between the marks that have moved to the rear of the vehicle.
- If toe-in (difference between A and B) deviates from the standard value, adjust.

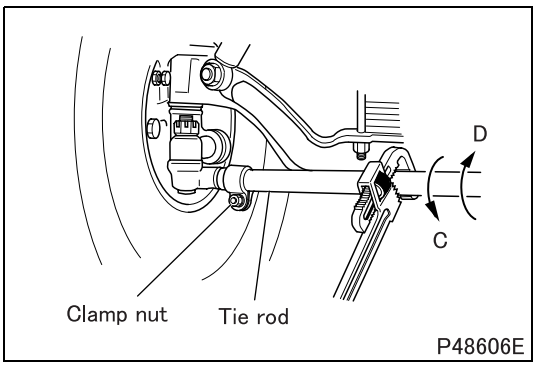

[Adjustment]

- Loosen the clamp nuts on the right and left.
- Turn the tie rod with a pipe wrench to adjust the toe-in.
  C: When adjusting to the toe-out direction
  D: When adjusting to the toe-in direction
- After adjustment, tighten the clamp nut to the specified torque.

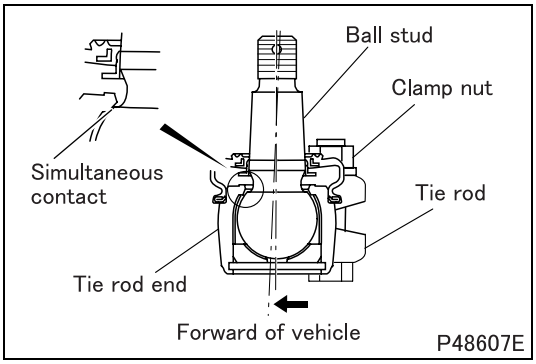

CAUTION ⚠

- **Hold down the tie rod end toward the front of the vehicle with the front wheels directed to forward running position so that the right and left tie rod ends are in contact with the ball studs at the same time. In this state adjust so that the specified toe-in is achieved and tighten the clamp nut to secure the tie rod.**

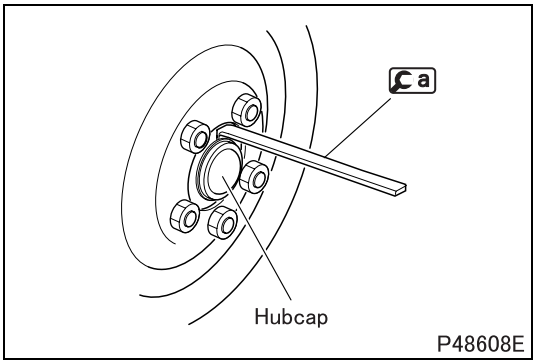

1.2 Inspection of camber

- Direct the front wheels exactly to forward running position.
- Remove the hubcap using a.

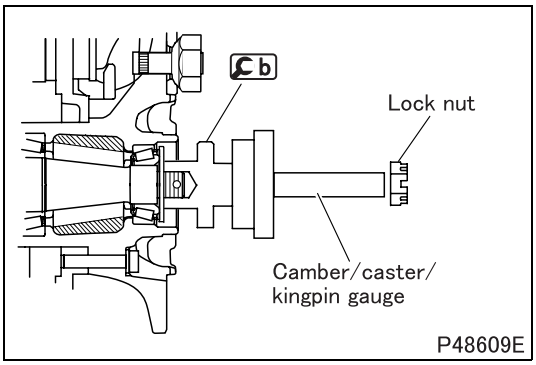

- Remove the lock nut.

CAUTION ⚠

- **Do not apply a vehicle weight to the hub bearing with the lock nut loosened.**

- Wipe off grease from the knuckle end, attach b and tighten it to the specified torque.
- Attach the camber/caster/kingpin gauge.

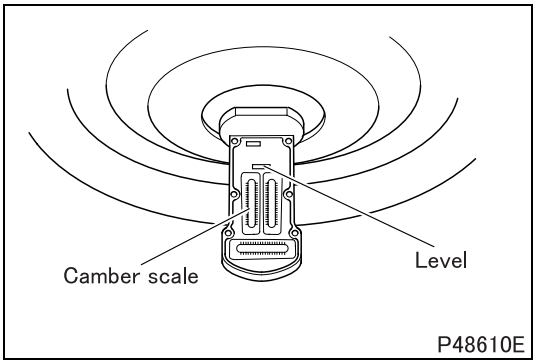

- Place the level in order to have bubble stay in the middle.
- Read center of bubble on camber scale to find the camber. Do the same way for the right and left front tires.
- If the measured value deviates from the standard value, disassemble the front axle for service.

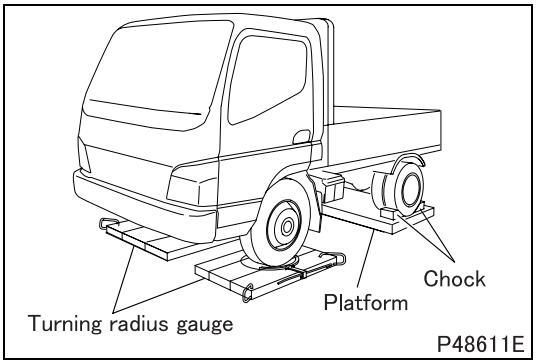

1.3 Inspection of caster and kingpin inclination angle

- Prepare a platform with the same height as the turning radius gauge and place it under the rear wheels so that the vehicle may be placed level.
- Apply chocks to the rear wheels.
- Keep the turning radius gauge locked.
- Jack up the vehicle, and set the right and left front wheels so that respective ground contact area centers of two wheels and turn table centers may meet.

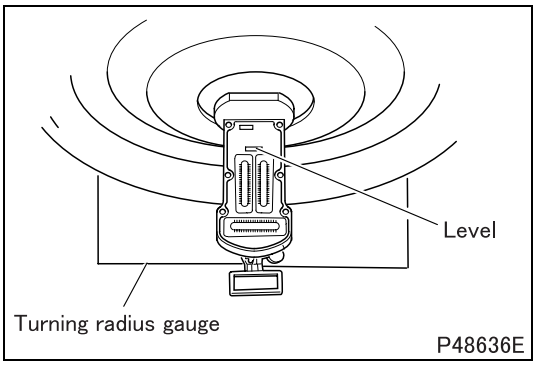

- Unfasten locking of the turning radius gauge, and set the scale to 0 degrees.
- In the same manner as in case of measuring camber in Section **1.2**, attach the camber/caster/kingpin gauge, and set the level so that the bubble comes in the middle.

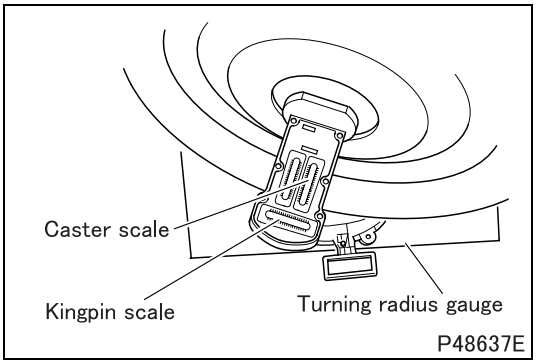

- Apply brake, and with brake applied to the front wheels, turn steering wheel slowly from the point of 0 degrees on the turning radius gauge, until the direction is changed by 20 degrees each to the right side in case of the right front wheel and to the left in case of the left front wheel.

NOTE

- **It is not possible to make exact measurement unless brake is kept applied, because otherwise wheels will turn slightly.**

- At the point where steering has been steered 20 degrees, set the caster scale and the center of the bubble of the kingpin scale to 0 degrees by turning the adjuster.

NOTE

- **Pay attention to the kingpin scale because it has scales for right and left: align the right kingpin scale in case of the right front wheel, and left kingpin scale in case of the left front wheel.**

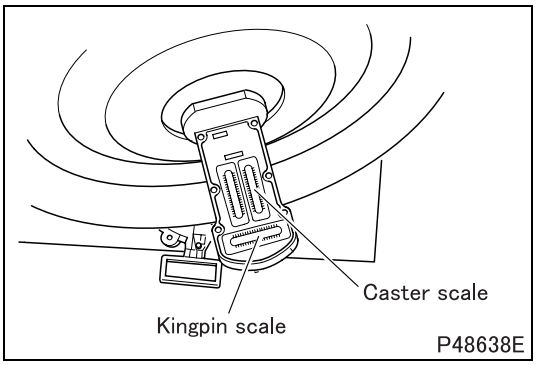

- Reverse this position, turn the steering wheel slowly until the direction of the front wheels changes by 20 degrees in the opposite direction.
- Read the center of bubbles at this position at the caster scale and kingpin scale to find caster and kingpin inclination angles.
- If the measured value deviates from the standard value, disassemble the front axle for service.

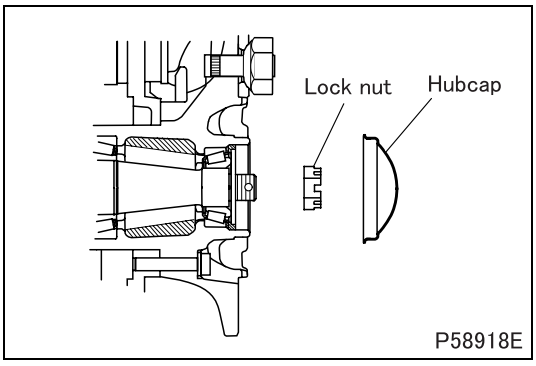

- After inspection, install the lock nut and measure the starting torque of the wheel hub bearing. If the starting torque deviates from the standard value, check the wheel bearings and perform expedient adjustment.
- Fill the specified amount of grease into wheel hub by using nozzle so that the outer bearing is covered with the grease and then install a new hubcap.

2. Inspection and Adjustment of Steering Angle

- Perform steering angle inspection and adjustment only after wheel alignment inspection and adjustment has been completed.

Service standards

Location	Maintenance item		Standard value	Limit	Remedy
–	Steering angle	Inside (outside steering angle is for reference only)	45° $^{+0°}_{-2°}$ (34°)	–	Adjust

Tightening torque (Unit: N·m {ft.lbs, kgf·m})

Mark	Parts to be tightened	Tightening torque	Remarks
–	Lock nut (knuckle stopper bolt mounting)	46.5 ± 7 {34 ± 5.4, 4.75 ± 0.75}	–

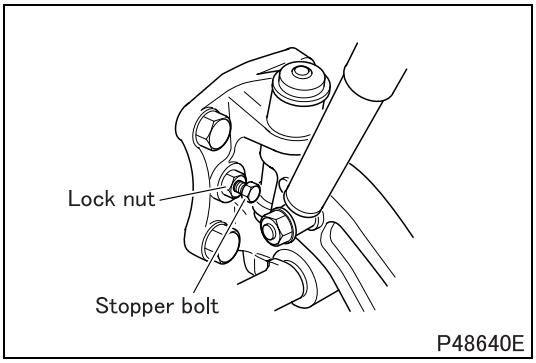

- Set the turning radius gauge and a platform on the vehicle in the same manner as in case of caster and kingpin inclination angle measurement performed in Section **1.3**.
- Turn the steering wheel right or left completely from the position where the turning radius gauge is set to 0 degrees, and read the scale of the turning radius gauge to measure the steering angle.
- If the measured value deviates from the standard value, adjust with the knuckle stopper bolt and tighten the lock nut to the specified torque.

3. Inspection of Side Slip

- Perform side slip inspection only after wheel alignment inspection and adjustment has been completed.
- For the side slip amount, which is related to wheel alignment, both the side slip amount and wheel alignment must conform to the standard values.

Service standards (Unit: mm {in.})

Location	Maintenance item	Standard value	Limit	Remedy
–	Side slip amount	0 ± 3 {0 ± 0.12}	–	Adjust

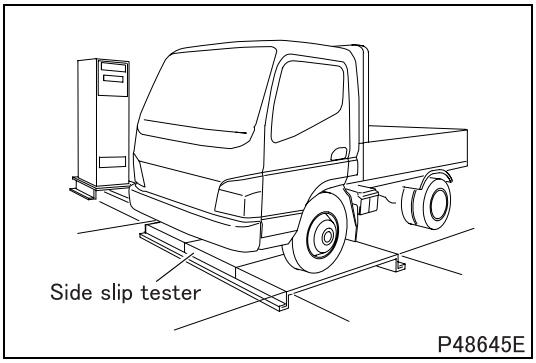

- Set the front wheels exactly to forward running position.
- Move the vehicle forward past the side slip tester as slowly as possible to inspect side slip.

NOTE

- **Pay attention to the following when moving over the side slip tester.**
- **Be sure to hold steering exactly at the forward running position, and make no turn.**
- **Do not apply brake.**
- **Keep the speed constant.**

- If the measured value deviates from the standard value, inspect and adjust wheel alignment.

4. Inspection of Tie Rod End Ball Joint

Service standards (Unit: mm {in.})

Location	Maintenance item	Standard value	Limit	Remedy
–	Play of tie rod end ball joint	0	–	Replace

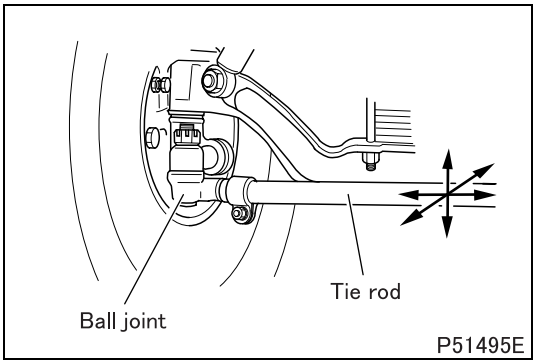

(1) Play of tie rod end ball joint

- Hold the tie rod section of the tie rod with the vehicle kept stationary, and move it in the back-and-forth, up-and-down and right-and-left directions to check for play at ball joints of the tie rod end.

NOTE

- **Be sure to check for play at ball joints of both right and left sides of the tie rod.**

- If feeling play with your hand, replace the tie rod end of the tie rod.

(2) Dust cover

- Check the dust cover for wear, cracks and other damage.
- If there is any abnormality, replace the tie rod end.

WHEEL HUB AND ROTOR

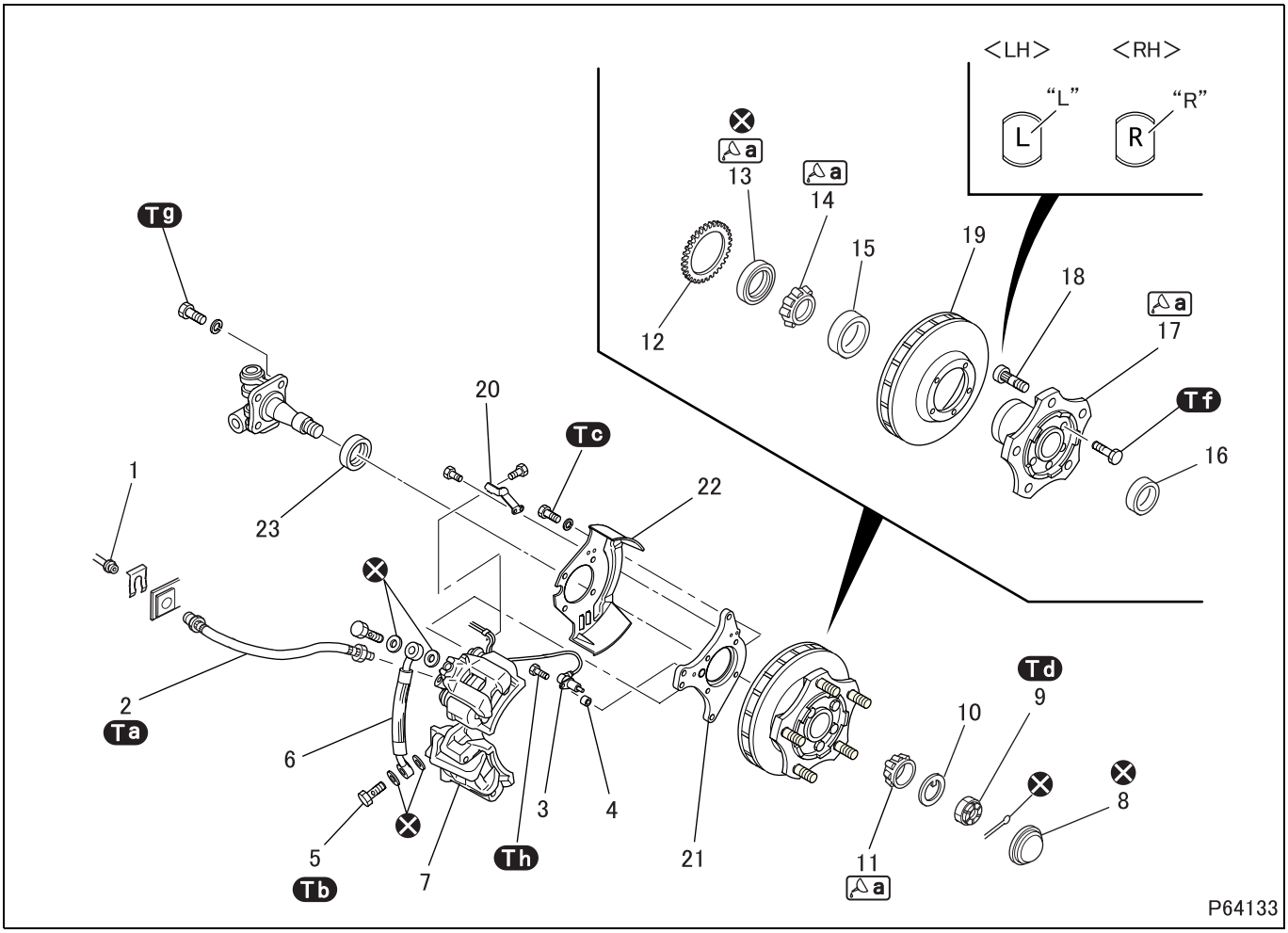

● **Disassembly sequence**

1 Brake pipe
2 Brake hose
3 Wheel speed sensor
4 Spacer
5 Eyebolt
6 Brake hose
7 Front disc brake (See Gr35A.)
8 Hubcap
9 Lock nut
10 Lock washer
11 Outer bearing inner race
12 Anti-lock brake system rotor
13 Oil seal
14 Inner bearing inner race
15 Inner bearing outer race
16 Outer bearing outer race
17 Wheel hub
18 Hub bolt
19 Disc rotor
20 Bracket
21 Adapter
22 Dust shield
23 Spacer

⊗: Non-reusable parts

CAUTION ⚠

- **Plug the brake hose to prevent entry of dust and dirt after it has been removed.**
- **Be careful not to damage the tip of the wheel speed sensor after removing it.**

NOTE

- **Do not remove the anti-lock brake system rotor unless replacing it.**
- **Do not disassemble the wheel hub and disc rotor unless replacing them.**

● **Assembly sequence**

Follow the disassembly sequence in reverse.

CAUTION ⚠

- **Make sure that the disc rotor surface and disc brake pad surface are free from grease to avoid malfunction of brakes.**
- **Make sure that the brake hose is not twisted when installing it.**
- **Inspect the drag torque of disc brakes after assembly. (See Gr35A.)**

Service standards (Unit: mm {in.})

Location	Maintenance item		Standard value	Limit	Remedy
–	Starting torque of wheel hub bearing (tangential force at hub bolt position with oil seal assembled)		1 to 3.5 N·m {0.7 to 2.6 ft.lbs, 0.10 to 0.35 kgf·m} (tangential force: 8.8 to 28.4 N {2.0 to 6.4 lbs., 0.9 to 2.9 kgf})	–	Adjust or replace
19	Disc rotor	Runout (measure, assembling it into front axle)	0.07 {0.0028} or less	0.10 {0.0039}	Replace
		Thickness	40 {1.57}	38 {1.50}	Replace

Tightening torque (Unit: N·m {ft.lbs, kgf·m})

Mark	Parts to be tightened		Tightening torque	Remarks
Ta	Brake hose		25.5 to 34.3 {18.8 to 25.3, 2.6 to 3.5}	–
Tb	Eyebolt		22 ± 2 {16 ± 1.5, 2.25 ± 0.25}	–
Tc	Bolt (front disc brake mounting)		152 ± 25 {112 ± 18, 15.5 ± 2.5}	–
Td	Lock nut	Primary tightening	113 ± 15 {83 ± 11, 11.5 ± 1.5}	–
		Secondary tightening after complete tightening	59 {44, 6}	Back-off angle 45° (1/8 of a turn)
Tf	Bolt (wheel hub and disc rotor mounting)		85.8 ± 12 {63 ± 8.9, 8.75 ± 1.25}	–
Tg	Bolt (adapter mounting)		118 ± 20 {87 ± 1.5, 12 ± 2}	–
Th	Bolt (speed sensor mounting)		12.3 ± 2.5 {9.1 ± 1.8, 1.25 ± 0.25}	–

Lubricant and/or sealant

Mark	Points of application			Specified lubricant and/or sealant	Quantity
△a	Pack outside of wheel hub	5 studs		Wheel bearing grease [NLGI No. 2 (Li soap)]	※ 65 ± 10 g {2.29 ± 0.35 oz}
		6 studs			※ 90 ± 10 g {3.17 ± 0.35 oz}
	Pack inside of wheel hub	5 studs			※ 210 ± 20 g {7.41 ± 0.71 oz}
		6 studs	FE84		※ 130 ± 10 g {4.59 ± 0.35 oz}
			FE85		※ 155 ± 10 g {5.47 ± 0.35 oz}
	Pack space between rollers of outer bearing inner race and inner bearing inner race				As required
	Lip area of oil seal				

※: For a wheel hub

Special tools (Unit: mm {in.})

<table>
<tr><th>Mark</th><th>Tool name and shape</th><th>Part No.</th><th>Application</th></tr>
<tr><td>a</td><td>Hubcap wrench
<table><tr><th>A</th><th>B</th></tr><tr><td>0.5
{0.020}</td><td>78°</td></tr></table> 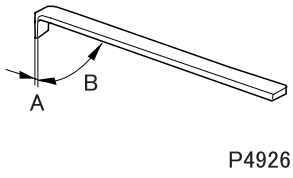
P49261</td><td>MB999108</td><td>Removal of hubcap</td></tr>
<tr><td>b</td><td>Oil seal installer
<table><tr><th>A</th><th>B</th></tr><tr><td>ϕ84
{3.31}</td><td>ϕ70
{2.76}</td></tr></table> 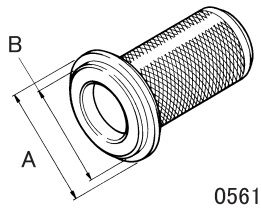
05619</td><td>MB999097</td><td rowspan="2">Installation of oil seal (to be used in combination)</td></tr>
<tr><td>c</td><td>Bearing installer
<table><tr><th>Part No.</th><th>A</th><th>B</th><th>C</th><th>Vehicle model</th></tr><tr><td>MB999099</td><td>ϕ88.5
{3.48}</td><td>ϕ71
{2.80}</td><td>ϕ51
{2.01}</td><td>Five studs</td></tr><tr><td>MB999069</td><td>ϕ94.5
{3.72}</td><td>ϕ92.5
{3.64}</td><td>ϕ60
{2.36}</td><td>Six studs</td></tr></table> 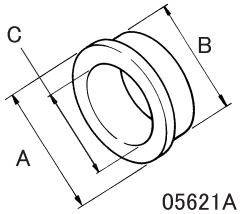
05621A</td><td>MB999099
MB999069</td></tr>
<tr><td>d</td><td>Bearing installer
<table><tr><th>A</th><th>B</th></tr><tr><td>ϕ70
{2.76}</td><td>ϕ57
{2.24}</td></tr></table> 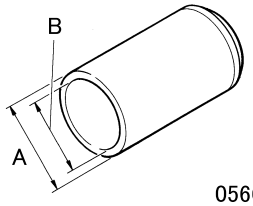
05668</td><td>MB999100</td><td rowspan="2">Installation of inner bearing outer race and outer bearing outer race (to be used in combination)</td></tr>
<tr><td>e</td><td>Bearing installer
<table><tr><th>Part No.</th><th>A</th><th>B</th><th>C</th><th>Vehicle model</th></tr><tr><td>MB999099</td><td>ϕ88.5
{3.48}</td><td>ϕ71
{2.80}</td><td>ϕ51
{2.01}</td><td>Inner side of five-stud models and outer side of all models</td></tr><tr><td>MB999069</td><td>ϕ94.5
{3.72}</td><td>ϕ92.5
{3.64}</td><td>ϕ60
{2.36}</td><td>Inner side of six-stud models</td></tr></table> 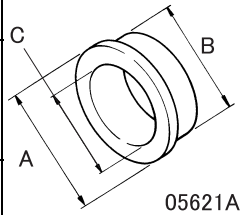
05621A</td><td>MB999099
MB999069</td></tr>
</table>

◆Removal procedure◆

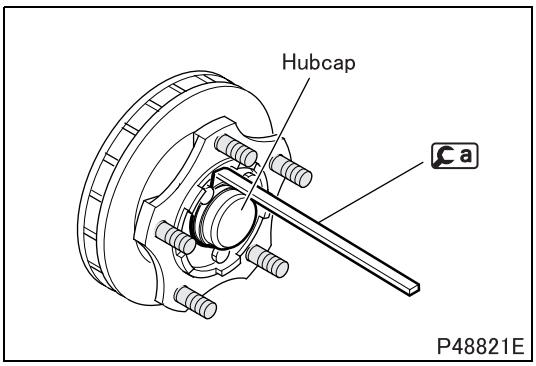

■ **Removal: Hubcap**

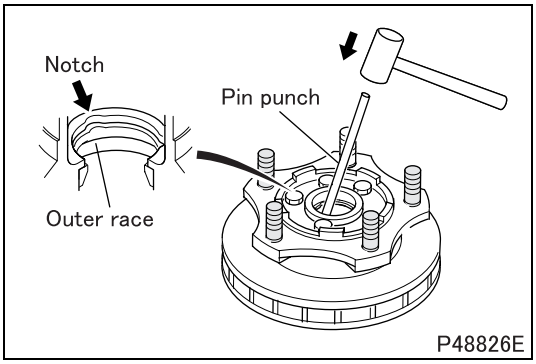

■ **Removal: Inner bearing outer race**

- Drive out the inner bearing outer race by tapping evenly at three indented parts in the wheel hub.

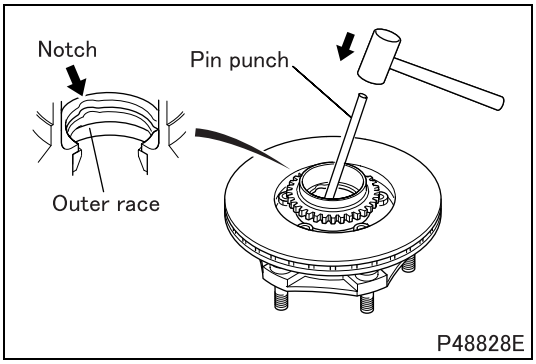

■ **Removal: Outer bearing outer race**

- Drive out the outer bearing outer race by tapping evenly at three indented parts in the wheel hub.

◆Inspection procedure◆

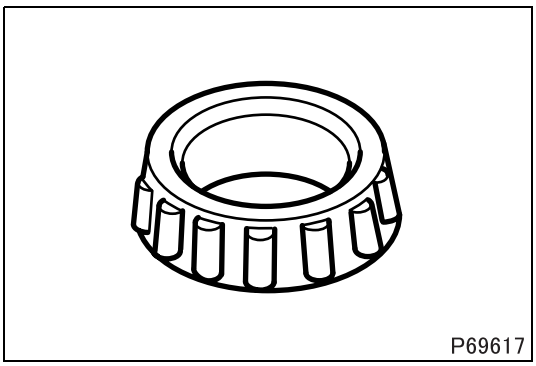
P69617

■ **Inspection: Outer bearing inner race**

- Inspect the outer bearing inner race after cleaning the bearing to remove grease completely.
- If any damage, wear, or poor rotating condition is evident in the inner race, replace it with a new one.
- The inner race and outer race should be replaced as a set.

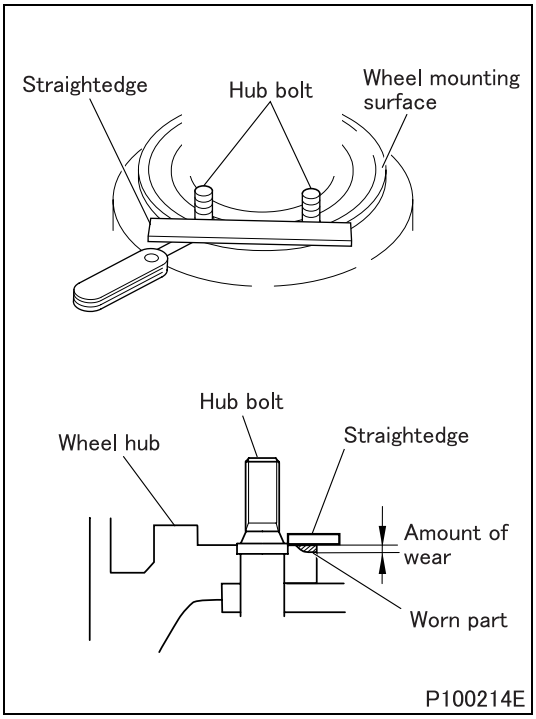

P100214E

■ **Inspection: Wheel hub**

(1) Visual inspection

- Check the disc wheel mounting surface of the wheel hub by watching and touching. If there is damage or crack on it, replace the wheel hub.
- Make sure that there is not rust, dust, paint or foreign body on the disc wheel mounting surface of the wheel hub to prevent the wheel nut to loosen.
- If any abnormality is found, remove it with sandpaper.

(2) Wear in disc wheel mounting part of wheel hub

- Clean the wheel mounting surface of the wheel hub before inspection.
- Place a straightedge on the hub so as to contact to the two hub bolts on the disc wheel mounting surface.

CAUTION ⚠

- **Make sure that the straightedge does not run onto the hub bolt.**

- Using feeler gauges to measure the amount of wear at the outer periphery of the wheel hub.
  Measure the amount of wear in the area of every hub bolt.
- If the amount of wear at any point exceeds the following standard value, inspect the crack check of wheel hub.
  Wear standard value: 0.8 mm

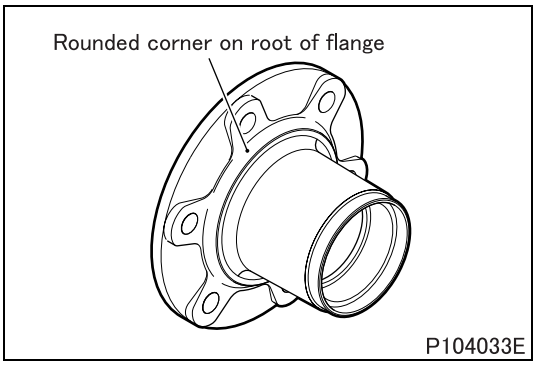

P104033E

(3) Crack check

- Check if there is not crack on the entire rounded corner on the root of flange of the wheel hub by magnetic particle or liquid penetrant testing. If crack is found, replace the wheel hub.
- If crack is found on the wheel hub bolt, replace it.
- If there is crack or stepped wear on the wheel hub mounting surface of wheel disc, replace it. (See Gr31.)

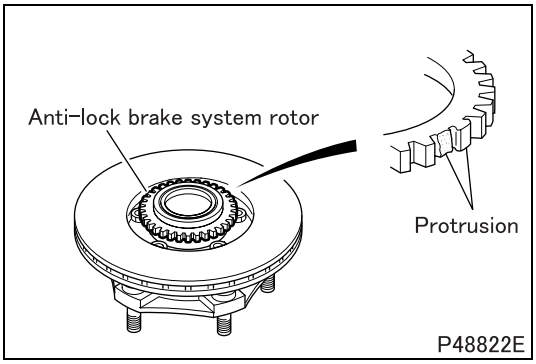

■ **Inspection: Anti-lock brake system rotor**

[Inspection]

- Check protrusions of the anti-lock brake system rotor for chipping and flattening.
- If any abnormality is found, replace the anti-lock brake system rotor.

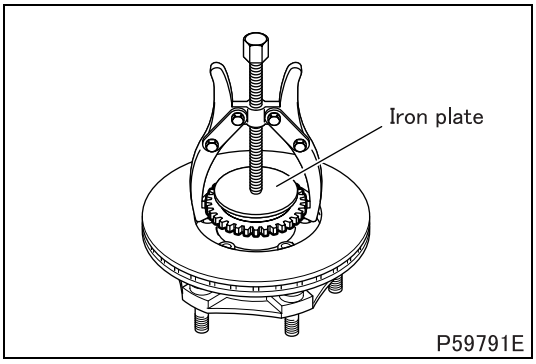

[Removal]

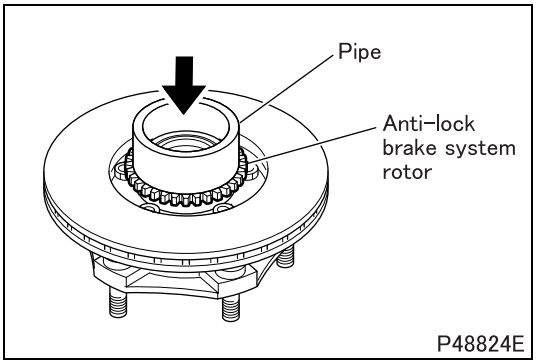

[Installation]

- Warm the anti-lock brake system rotor to approximately 150°C.
- Install the anti-lock brake system rotor and wheel hub evenly using a pipe so as not to allow them to tilt.

WARNING ⚠

- **Handling the warmed rotor by bare hands may burn.**

■ **Inspection: Inner bearing inner race**

- Inspect the inner bearing inner race in the same manner as for the outer bearing inner race.
  (See **"■ Inspection: Outer bearing inner race".**)

◆Installation procedure◆

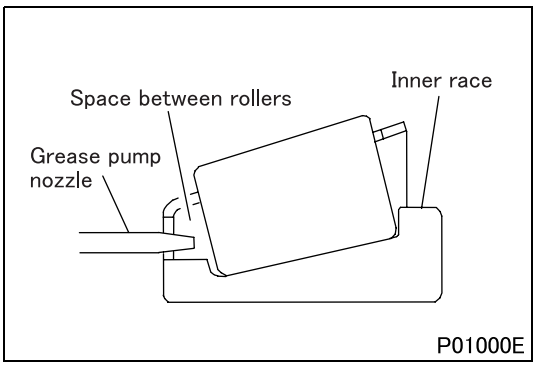

■ Installation: Packing grease in inner bearing inner race

- Insert the grease pump nozzle into the space between rollers of the inner bearing inner race to pack grease sufficiently.

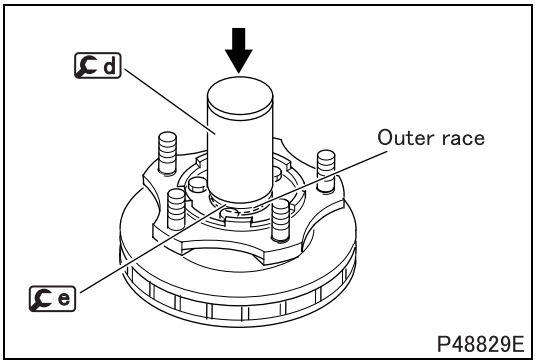

■ Installation: Outer bearing outer race

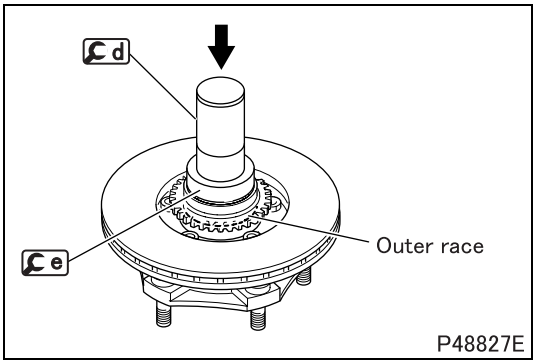

■ Installation: Inner bearing outer race

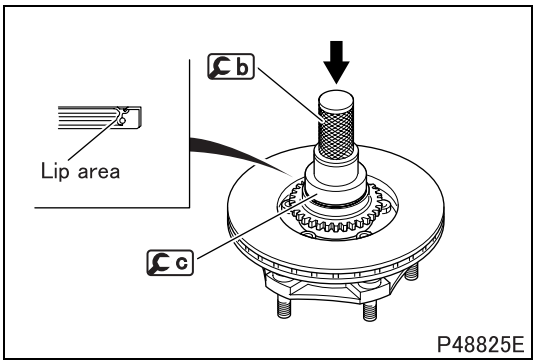

■ Installation: Oil seal

- Apply grease to the lip area of the oil seal and install it on the wheel hub in the illustrated direction.

■ Installation: Packing grease in outer bearing inner race

- Follow the same procedure as for packing the inner bearing inner race with grease.
  (See **"■ Installation: Packing grease in inner bearing inner race".**)

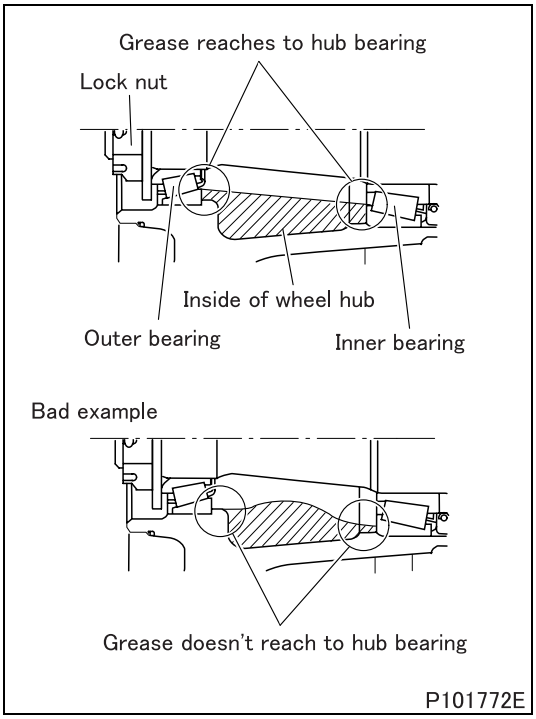

■ **Installation: Packing grease inside of wheel hub**

- Apply specified amount of grease to inside A of wheel hub so that the grease reaches inner bearing and outer bearing as illustrated.
- After installing lock nut, insert grease pump nozzle into outside B of wheel hub and fill specified amount of grease so as to make a grease wall outside of the outer bearing.

CAUTION ⚠

- **Applying grease as illustrated in the "bad example" causes the wheel hub bearing to seize.**

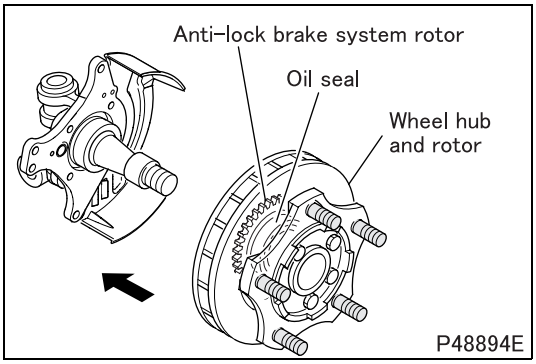

■ **Installation: Wheel hub and rotor**

- Slowly install the wheel hub and rotor assembly so as not to cause damage to the oil seal and anti-lock brake system rotor.

CAUTION ⚠

- **If the anti-lock brake system rotor is damaged, wheel speed sensor signals become abnormal, causing the anti-lock brake system to malfunction.**

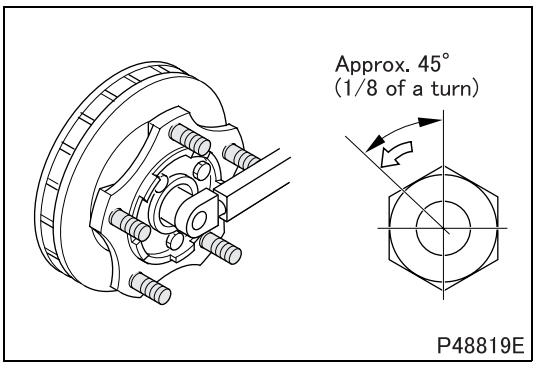

■ **Adjustment: Starting torque of wheel hub bearing**

CAUTION ⚠

- **Unless this adjustment procedure is performed, seizure of the wheel hub bearing can be caused.**

[Adjustment]

- Tighten the lock nut to the specified torque (primary tightening) while turning the wheel hub and rotor, and then loosen it completely.
- Smooth operation of the outer bearing and inner bearing by turning the wheel hub and rotor several times, and then tighten the lock nut to the specified torque (secondary tightening).
- Return the lock nut by approximately 45 degrees (1/8 of a turn) and secure it with a split pin. If pin holes do not align, align them in the course of loosening. Make sure that there is no play in the axial direction.

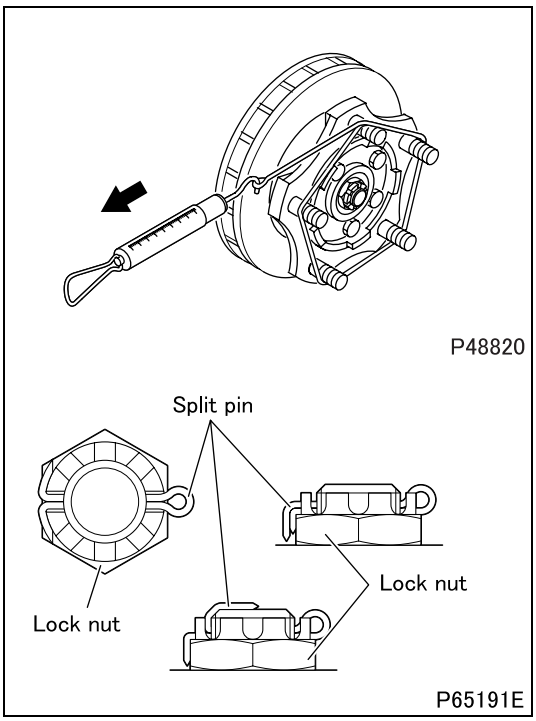

[Inspection]

- After installing the lock nut, perform the following inspection.
- Measure the tangential force at the hub bolt position using a spring balance.
- If the tangential force is within the specified value, the starting torque conforms to the standard value. When the measured value is the specified value, install the split pin following either of method in the illustration.
- If the measured value deviates from the specified value, repeat adjustment because the adjustment of the lock nut may be insufficient.
- If the result is found to be abnormal, replace the outer and inner bearings.

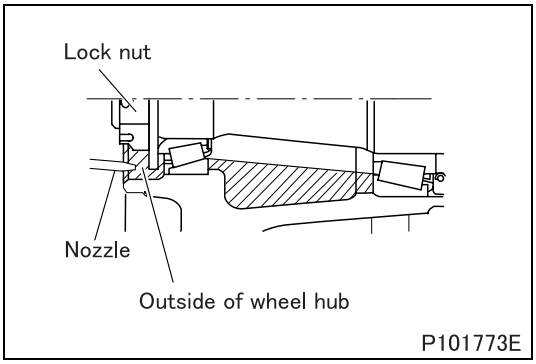

■ Installation: Packing grease outside of wheel hub

- After installing lock nut, insert grease pump nozzle into outside of wheel hub and fill specified amount of grease so as to make a grease wall outside of the outer bearing.

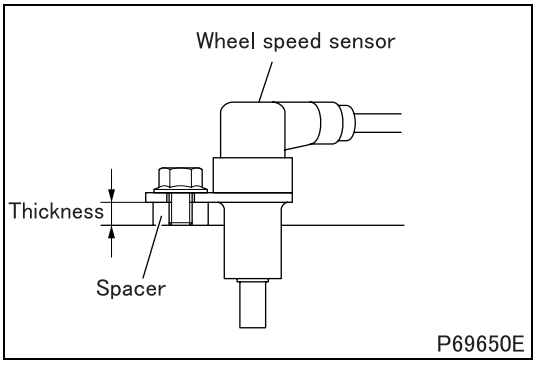

■ Installation: Spacer

- Install a spacer and wheel speed sensor in the position shown in the illustration.
  Thickness of spacer: 16.0 mm <FE (Except FE85)>
  14.5 mm <FE85>

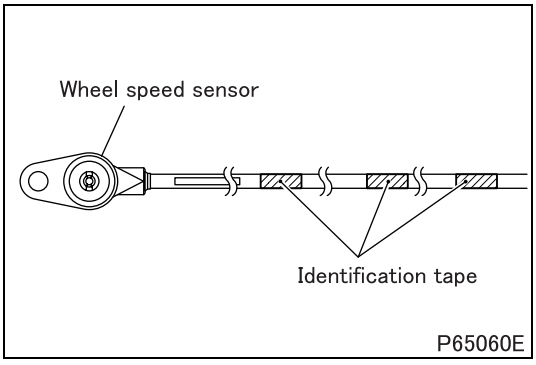

■ Installation: Wheel speed sensor

- Using clips, secure in place the wheel speed sensor harness at the identification tape portions, ensuring that the harness is free of kinks, slack and/or interference with other parts.

M E M O

KNUCKLE AND KINGPIN, FRONT AXLE

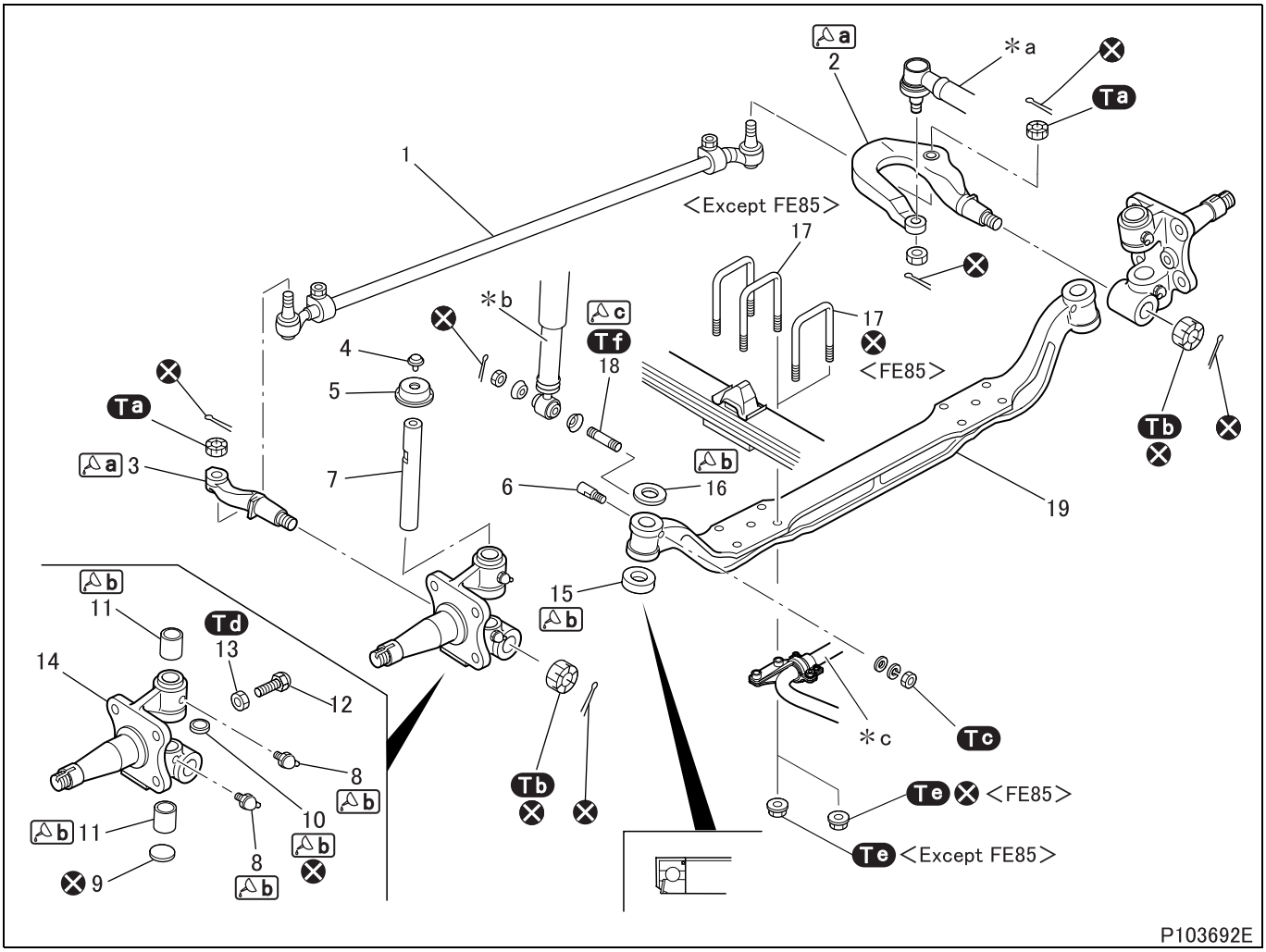

● **Disassembly sequence**

1 Tie rod (See later section.)
2 Knuckle arm
3 Tie rod arm
4 Dust plug
5 Dust cap
6 Lock pin
7 Kingpin
8 Grease nipple
9 Plug
10 Dust seal
11 Bushing
12 Knuckle stopper bolt
13 Lock nut
14 Knuckle
15 Thrust bearing
16 Kingpin shim
17 U-bolt
18 Stud bolt
19 Front axle

***a**: Drag link
***b**: Shock absorber
***c**: Stabilizer
⊗: Non-reusable parts

CAUTION ⚠

- **When removing the tie rod, take care not to deform or damage the dust cover.**

● **Assembly sequence**

Follow the disassembly sequence in reverse.

Repair kit: Kingpin kit

Service standards (Unit: mm {in.})

Location	Maintenance item		Standard value	Limit	Remedy
7	Outer diameter of kingpin		27.947 to 27.980 {1.100 to 1.102}	27.9 {1.098}	Replace
7, 11	Clearance between kingpin and bushing		0.020 to 0.086 {0.00079 to 0.0034}	0.15 {0.0059}	Replace
7, 19	Clearance between kingpin and front axle		0.020 to 0.074 {0.00079 to 0.0029}	0.1 {0.0039}	Replace
11	Inner diameter of bushing (after having been pressed into knuckle)		28.000 to 28.033 {1.102 to 1.103}	–	Replace
14, 19	Vertical clearance between knuckle and front axle		0.02 to 0.10 {0.00079 to 0.0039}	0.20 {0.0079}	Adjust
19	Front axle	Horizontal bend	–	2 {0.079}	Replace
		Vertical bend	–	2 {0.079}	
		Kingpin inclination angle	8° ± 10’	–	

Tightening torque (Unit: N·m {ft.lbs, kgf·m})

Mark	Parts to be tightened		Tightening torque	Remarks
Ta	Nut (tie rod mounting)		93 ± 25 {69 ± 18, 9.5 ± 2.5}	–
Tb	Nut (knuckle arm mounting)		345 ± 49 {254 ± 36, 35 ± 5}	–
	Nut (tie rod arm mounting)			
Tc	Nut (lock pin mounting)		33 ± 5 {25 ± 3.6, 3.4 ± 0.5}	–
Td	Lock nut (knuckle stopper bolt tightening)		46.5 ± 7 {34 ± 5.4, 4.75 ± 0.75}	–
Te	Nut (U-bolt mounting)	Except FE85	162 ± 15 {120 ± 11, 16.5 ± 1.5}	–
		FE85	175 ± 5 {129 ± 3.7, 17.8 ± 0.5}	–
Tf	Stud bolt	Stud	88 {65, 9} or more	–
		Nut (return)	137 {101, 14} or more	–

Lubricant and/or sealant

Mark	Points of application	Specified lubricant and/or sealant	Quantity
a	Knuckle arm and tie rod arm threads	Wheel bearing grease [NLGI No. 2 (Li soap)]	As required when parts are reused
b	Lip area of dust seal		As required
	Inside surface of bushing		
	Top face of thrust bearing		
	Both sides of kingpin shim		
	Fill from grease nipple		Until grease starts overflowing from dust plug
c	Stud threads of stud bolt	Loctite 271	As required

Special tools (Unit: mm {in.})

Mark	Tool name and shape	Part No.	Application
a	Kingpin puller **A:** Pipe **B:** Bolt **C:** Cap **D:** Nut 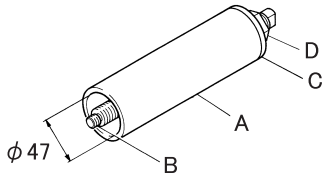 06102	MB999013 A: MB999014 B: MB999015 C: MB999016 D: MB999017	Removal of kingpin
b	Bushing installer **A:** Bushing installer A **B:** Bushing installer B 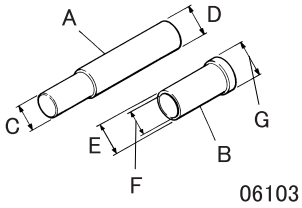 06103 **C**: ϕ25 {0.98}; **D**: ϕ30 {1.18}; **E**: ϕ28 {1.10}; **F**: ϕ25 {0.98}; **G**: ϕ32.8 {1.29}	MB999066 A: MB999067 B: MB999068	Removal and installation of kingpin bushing

◆Removal procedure◆

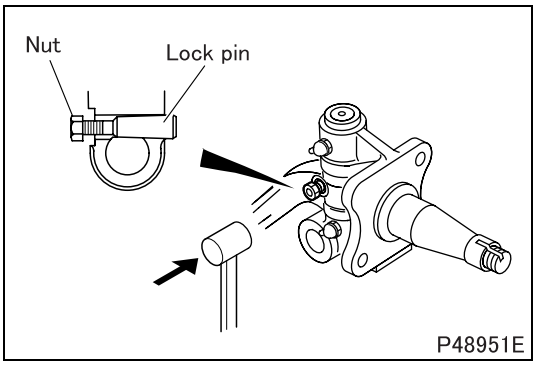

■ **Removal: Lock pin**

- Remove the nut, spring washer and washer.
- Screw in the nut again until just before it is flush with the lock pin, and lightly tap the nut to loosen the lock pin.

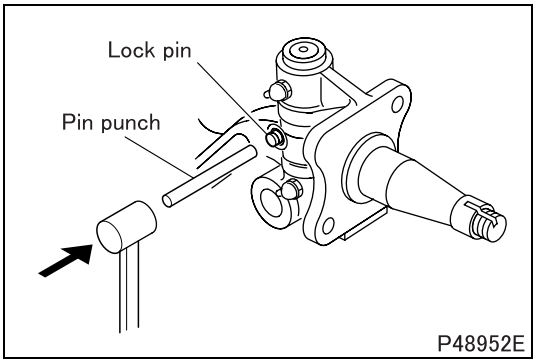

- Remove the nut, apply a pin punch to the lock pin and lightly tap it to remove.

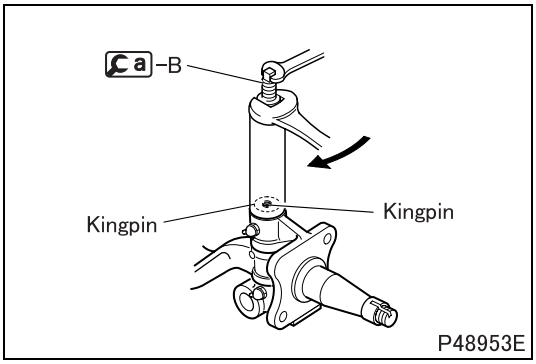

■ **Removal: Kingpin**

- Screw a -B into the kingpin threads to remove the kingpin.

◆Inspection procedure◆

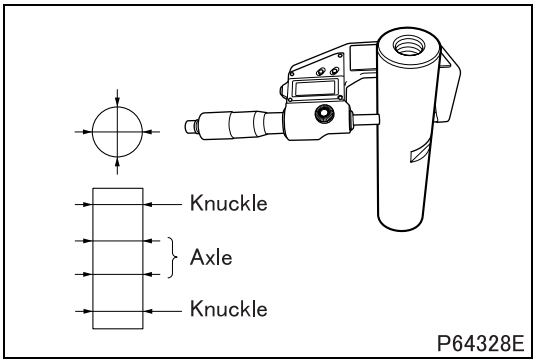

■ **Inspection: Outer diameter of kingpin**

- Take measurement at a total of four levels on the kingpin: two levels for the axle fitting portion and one level each for the upper and lower knuckle fitting portions.
- If the measured value is under the limit, replace the kingpin with a new one.

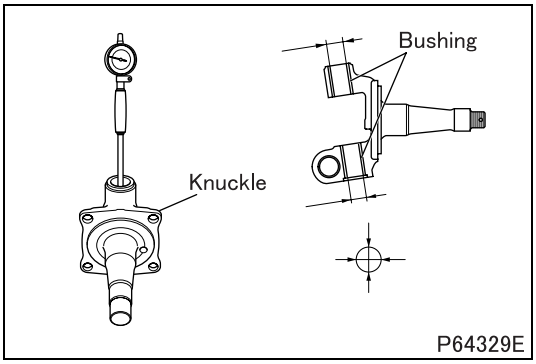

■ **Inspection: Clearance between kingpin and bushing**

- Measure the inner diameter of the upper and lower bushings using a cylinder gauge and calculate the clearance deducting the outer diameter of the kingpin from the inner diameter of the bushing.
  If the clearance exceeds the limit, replace the bushings with new ones.

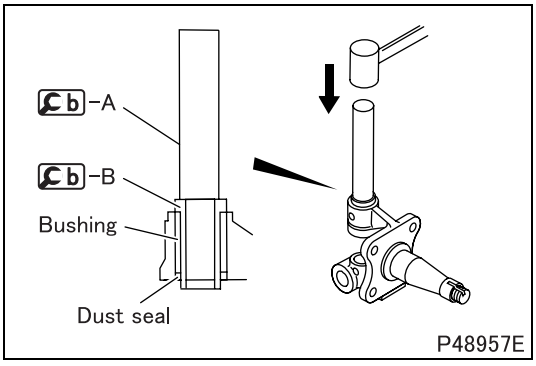

Replacement of bushing
[Removal]

- Remove the bushing and the dust seal at the same time using b.

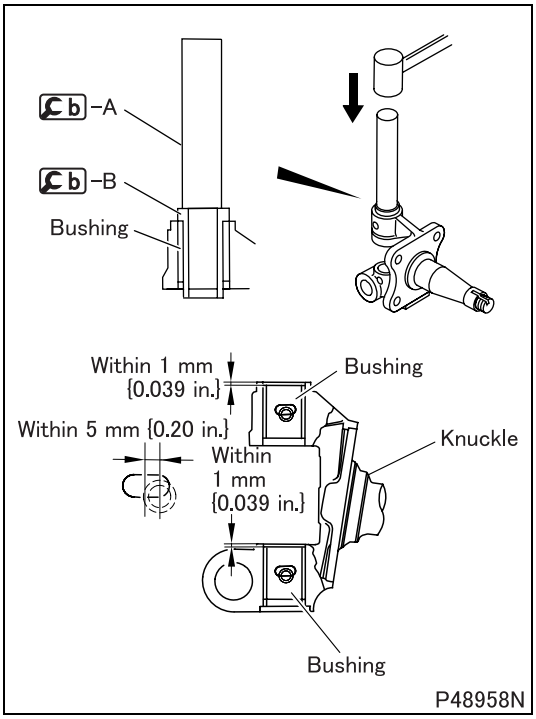

[Installation]

- Install the bushing using Cb so that a step height between the bushing and knuckle is within 1 mm {0.039 in.}.
- The oil hole of the bushing must not deviate from the screw hole of the knuckle more than 5 mm {0.20 in.}.

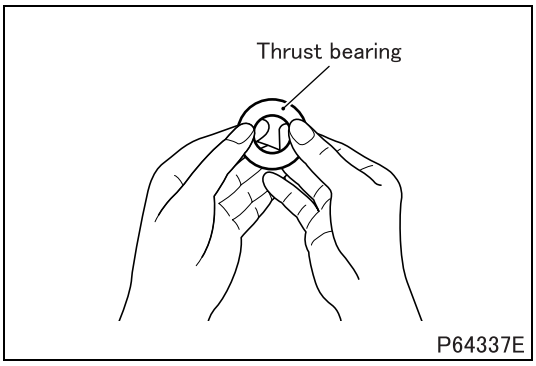

■ Inspection: Thrust bearing

- Inspect the aspect and smooth turning of the thrust bearing. If any crack, damage, or un-smooth turning is found, replace the thrust bearing with a new one.

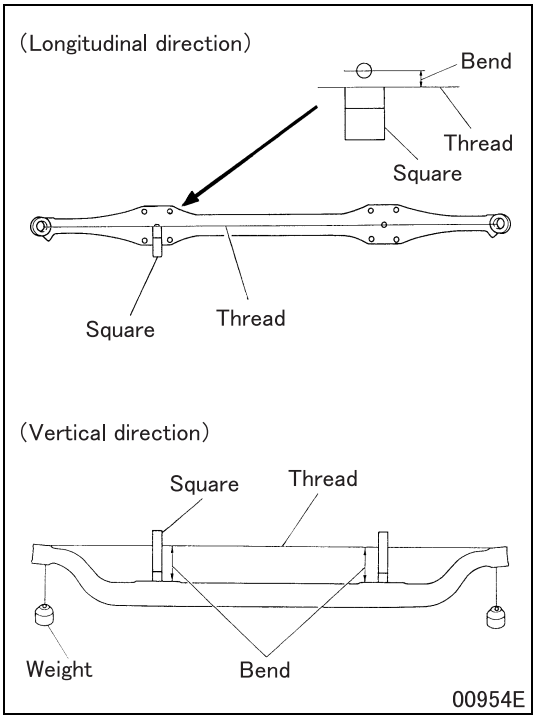

■ Inspection: Front axle

(1) Bend of front axle in the back-and-forth direction and vertical direction

- Put a piece of thread through kingpin holes of the front axle and hang weights at both ends.
- Use a square to find bend to each of back-and-forth and vertical directions.
- If the measured value exceeds the limit, replace the front axle.

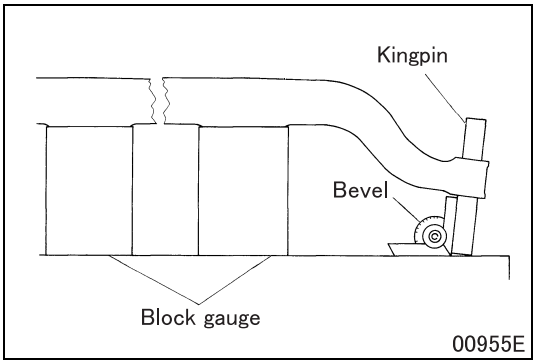

(2) Kingpin inclination angle

- Set the kingpin on the front axle as illustrated to measure the angle.
- If the measured value deviates from the standard value, replace the front axle.

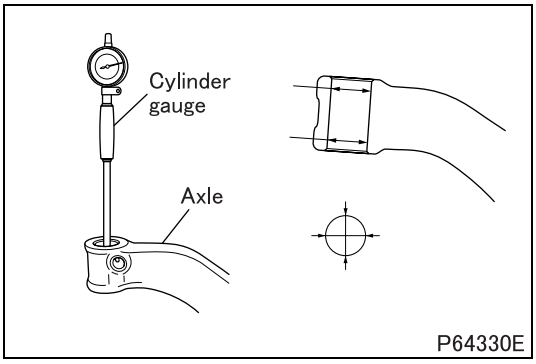

(3) Clearance between kingpin and front axle

- Measure the inner diameter of the axle's hole where the kingpin is inserted using a cylinder gauge and calculate the clearance deducting the outer diameter of the kingpin from the inner diameter.
  If the clearance exceeds the limit, replace the axle or the kingpin with a new one.

◆Installation procedure◆

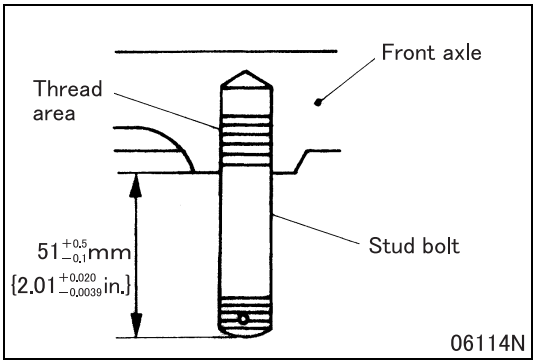

■ Installation: Stud bolt

- Apply Loctite to front axle mounting threads of the stud bolt.
- Install the stud bolt to the dimension as illustrated.

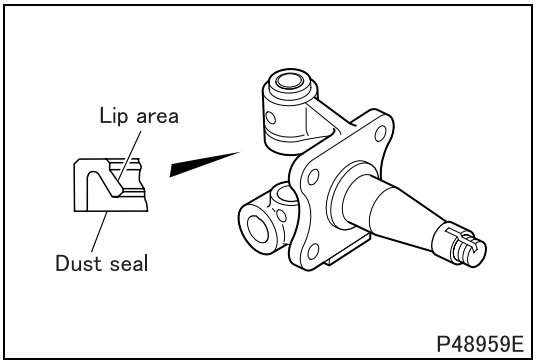

■ Installation: Dust seal

- Apply grease to the lip area of the dust seal and install it on the knuckle in the illustrated direction.

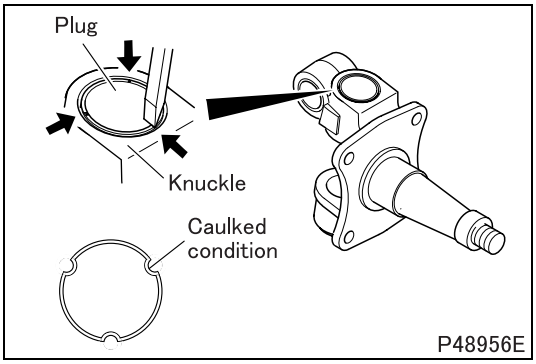

■ **Installation: Plug**

- After installing the plug, caulk the knuckle at three evenly spaced points of the plug circumference avoiding previously caulked points.

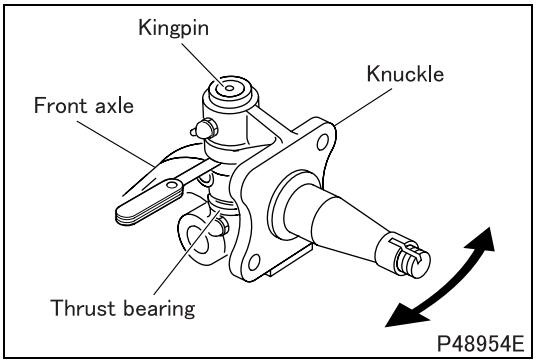

■ **Installation: Knuckle**

- After temporarily assembling the thrust bearing, knuckle and kingpin into the front axle, move the knuckle several times to smooth its operation.
- Measure clearance between the front axle top face and the knuckle bottom.

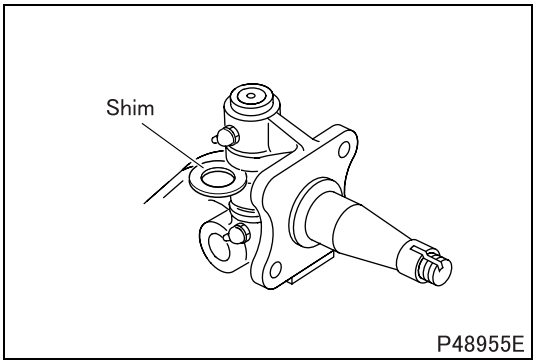

- If the measured value exceeds the limit, adjust with a kingpin shim.
  Thickness of kingpin shims available
  0.10, 0.15, 0.20, 0.30, 0.40, 0.50, 0.60, 0.70 mm
  {0.0039, 0.0059, 0.0079, 0.012, 0.016, 0.020, 0.023, 0.028 in.}
  (Eight thickness)

CAUTION ⚠

- **Select a kingpin shim so that the clearance is as small as possible within the range of the standard value.**
- **After assembly, make sure that the knuckle moves smoothly.**

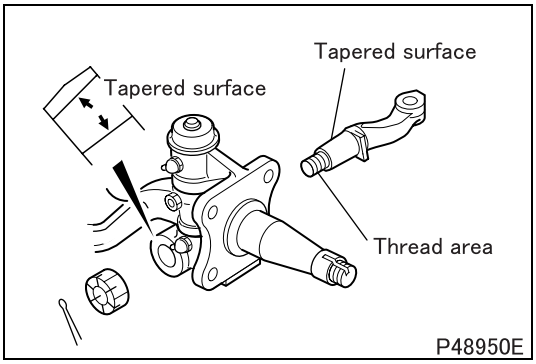

■ **Installation: Tie rod arm and knuckle**

(1) When one or both of the tie rod arm and knuckle need reassembly making use of existing parts

- Polish the entire tapered surfaces of the tie rod arm and knuckle evenly by means of sand paper #120 or above until sand paper score is visible on polished surfaces. (This does not apply to new replacement parts.)
- Clean the tapered surfaces and thread areas of the tie rod arm and knuckle.

NOTE

- **Use acetone, cleaning fluid for color check, or equivalent as solvent.**

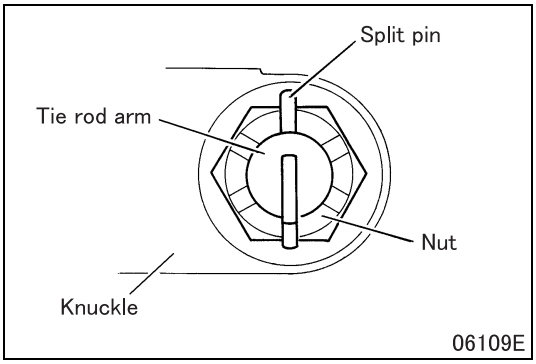

- Apply grease to the thread area of the tie rod arm and install it.

CAUTION ⚠

- **When installing the tie rod arm, make sure that tapered surfaces of the tie rod arm and knuckle are free from grease.**

- Tighten the nut to the specified torque. Be sure to align pin holes in the course of tightening and insert the split pin as illustrated.

(2) When both of the tie rod arm and knuckle for assembling are new parts

- Clean tapered surfaces and thread areas of the tie rod arm and knuckle.
- Tighten the nut to the specified torque. Be sure to align pin holes in the course of tightening and insert the split pin as illustrated.

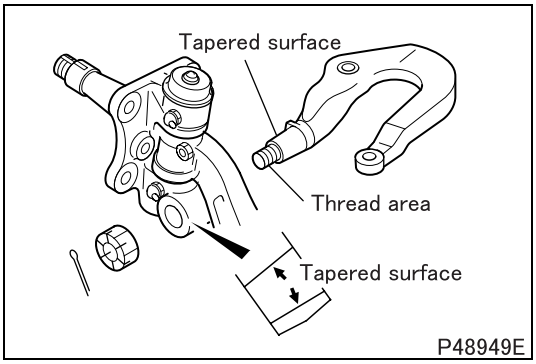

■ Installation: Knuckle arm and knuckle

(1) When one or both of the knuckle arm and knuckle need reassembly making use of existing parts

- Polish the entire tapered surfaces of the knuckle arm and knuckle evenly by means of sand paper #120 or above until sand paper score is visible on polished surfaces. (This does not apply to new replacement parts.)
- Clean the tapered surfaces and thread areas of the knuckle arm and knuckle.

NOTE

- **Use acetone, cleaning fluid for color check, or equivalent as solvent.**

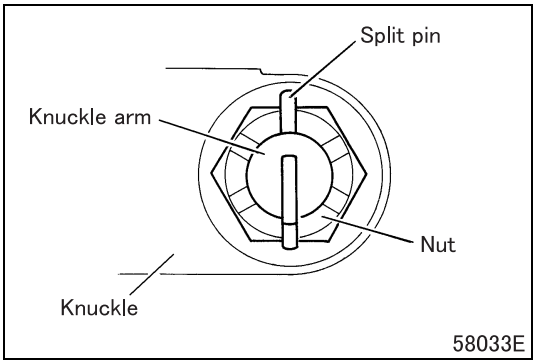

- Apply grease to the thread area of the knuckle arm and install it.

CAUTION ⚠

- **When installing the knuckle arm, make sure that tapered surfaces of the knuckle arm and knuckle are free from grease.**

- Tighten the nut to the specified torque. Be sure to align pin holes in the course of tightening and insert the split pin as illustrated.

(2) When both of the knuckle arm and knuckle for assembling are new parts

- Clean tapered surfaces and thread areas of the knuckle arm and knuckle.
- Tighten the nut to the specified torque. Be sure to align pin holes in the course of tightening and insert the split pin as illustrated.

TIE ROD

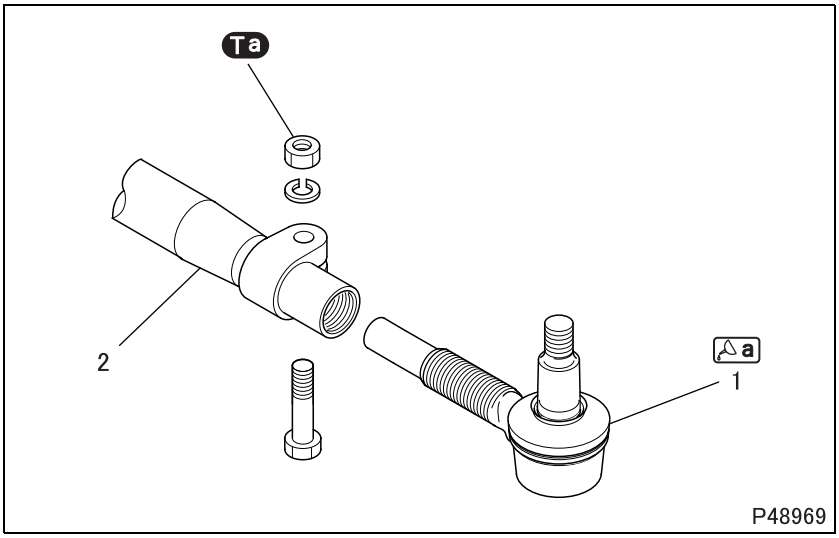

● **Disassembly sequence**

1 Tie rod end
2 Tie rod

CAUTION ⚠

- **If any abnormality such as tear is found in the dust boot of the tie rod end, replace the tie rod end.**

NOTE

- **Do not disassemble the tie rod end, as it is of non-disassembly type.**

● **Assembly sequence**

Follow the disassembly sequence in reverse.

Service standards (Unit: mm {in.})

Location	Maintenance item		Standard value	Limit	Remedy
1	Ball joint of tie rod end	Play (± 980 N {220 lbs, ± 100 kgf} loaded)	0 to 0.15 {0 to 0.0059}	–	Replace
		Rotation torque	1.0 to 5.9 N·m {0.7 to 4.4 ft.lbs, 0.1 to 0.6 kgf·m}	–	
2	Bend of tie rod		–	1 {0.039} or less	Correct or replace

Tightening torque (Unit: N·m {ft.lbs, kgf·m})

Mark	Parts to be tightened	Tightening torque	Remarks
Ta	Nut (tie rod end tightening)	25 ± 5 {18 ± 3.7, 2.5 ± 0.5}	–

Lubricant and/or sealant

Mark	Points of application	Specified lubricant and/or sealant	Quantity
a	Lip area of dust cover of tie rod end	Wheel bearing grease [NLGI No. 2 (Li soap)]	As required

Special tools

Mark	Tool name and shape	Part No.	Application
a	Preload socket 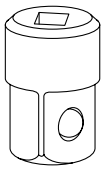 P48876	MB999326	Measurement of rotation torque of tie rod end

◆Inspection procedure◆

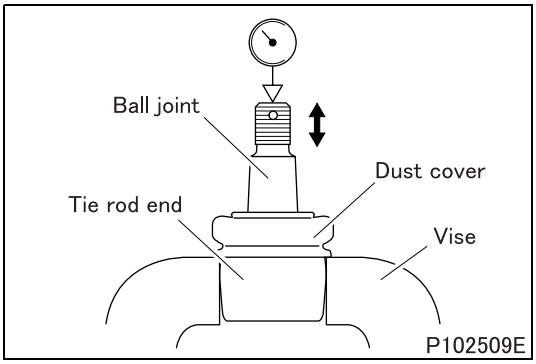

■ **Inspection: Tie rod end**

(1) Play

- Fix the tie rod end with a vise.

CAUTION ⚠

- **Take care not to deform or damage the dust cover when fixing it with a vise.**

- If measured value deviates from the standard value with applying the specified load (push and pull) to the ball joint, replace the tie rod end.

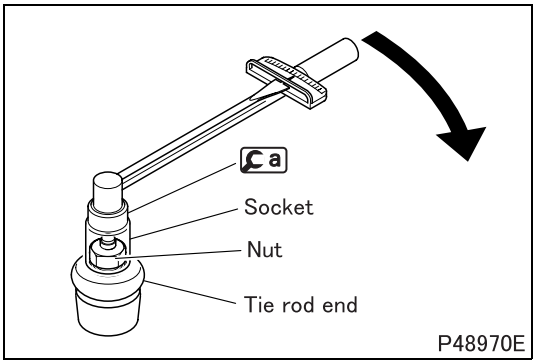

(2) Rotation torque

- Install the tie rod mounting nut on the tie rod end.
- Install the socket, Ca and torque wrench to measure the rotation torque.
- If the measured value deviates from the standard value, replace the tie rod end.

(3) Dust cover

- Check the dust cover for wear, cracks and other damage. These abnormalities may cause water infiltration to the ball joint and wear out it at early stage.
- If any abnormality is found in the dust cover, replace the tie rod end.

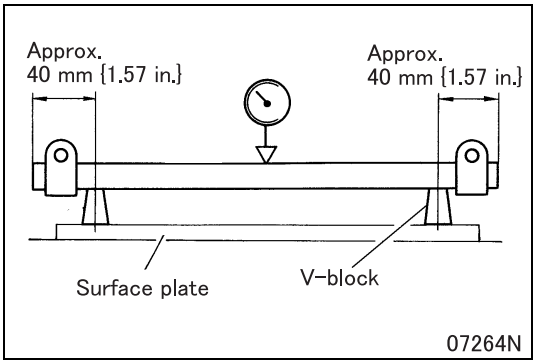

■ **Inspection: Bend of tie rod**

- Measure the bend of the tie rod at its center.

NOTE

- **Give the tie rod one complete turn and read the dial gauge at this time. The bend is one half of the reading.**

- If the measured value exceeds the limit, correct or replace the tie rod.

◆Installation procedure◆

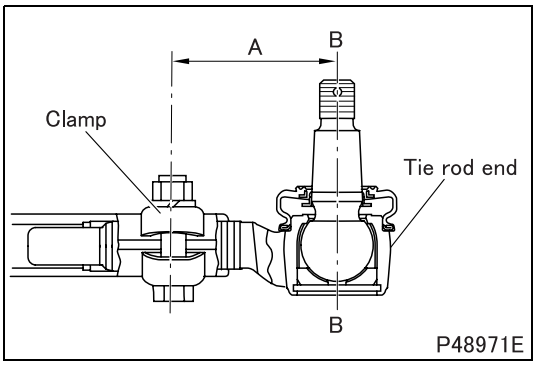

■ **Installation: Tie rod end**

- Screw in the tie rod end so that difference of dimension A between the tie rod end and the clamp is within 1.5 mm {0.059 in.} between right and left.
  A: Approximately 74 mm {2.91 in.}

CAUTION ⚠

- **Ensure that difference of an amount of screwing in the tie rod end between right and left is within one turn.**
- **Secure the tie rod ends so that illustrated axis B-B on the right is parallel to that on the left.**

Group 26B

Front Axle <FG>

Table of Contents

Back

Home

MITSUBISHI FUSO TRUCK OF AMERICA, Inc.

Pub.No.TWSE0805-26B

INDEX

SPECIFICATIONS 26B-2

STRUCTURE AND OPERATION

1. **Wheel Hub and Brake Drum 26B-2**
2. **Free Wheel Hub 26B-3**
3. **Drive Shaft and Steering Knuckle, Axle Housing 26B-4**
4. **Reduction and Differential 26B-5**

TROUBLESHOOTING 26B-6

ON-VEHICLE INSPECTION AND ADJUSTMENT

1. **Inspection and Adjustment of Wheel Alignment 26B-10**
2. **Inspection and Adjustment of Steering Angle 26B-14**
3. **Inspection of Side Slip 26B-14**
4. **Inspection of Tie Rod End Ball Joint 26B-15**
5. **Inspection and Replacement of Axle Oil 26B-15**

WHEEL HUB AND BRAKE DRUM 26B-18

DRIVE SHAFT AND STEERING KNUCKLE 26B-30

TIE ROD 26B-36

AXLE HOUSING 26B-38

REDUCTION AND DIFFERENTIAL 26B-40

SPECIFICATIONS

Item		Specifications
Front axle	Model	F200TW
	Type	Banjo type, full floating, with Birfield joint
Tread (dimension notified to the authorities) mm {in.}		1650 {65.0}
Reduction	Model	D1H modified
	Type	Single-reduction hypoid gear
	Gear ratio	4.875
Differential	Tooth shape	Straight bevel gear
Gear oil	Grade	Normal: Maximum air temperature during operation below 40°C {104°F} API GL-5 SAE 90 Hot area: Maximum air temperature during operation above 40°C {104°F} API GL-5 SAE 140
	Quantity L {qts.}	3.0 {3.2}
Mass kg {lb.}		Approx. 250 {550}

- Use the gear oil with a SAE viscosity grade of 140 when a vehicle is used under heavily-loaded, severe conditions such as continuous driving on uphill grades. However, the air temperature must be above 10°C {50°F}.

STRUCTURE AND OPERATION

1. Wheel Hub and Brake Drum

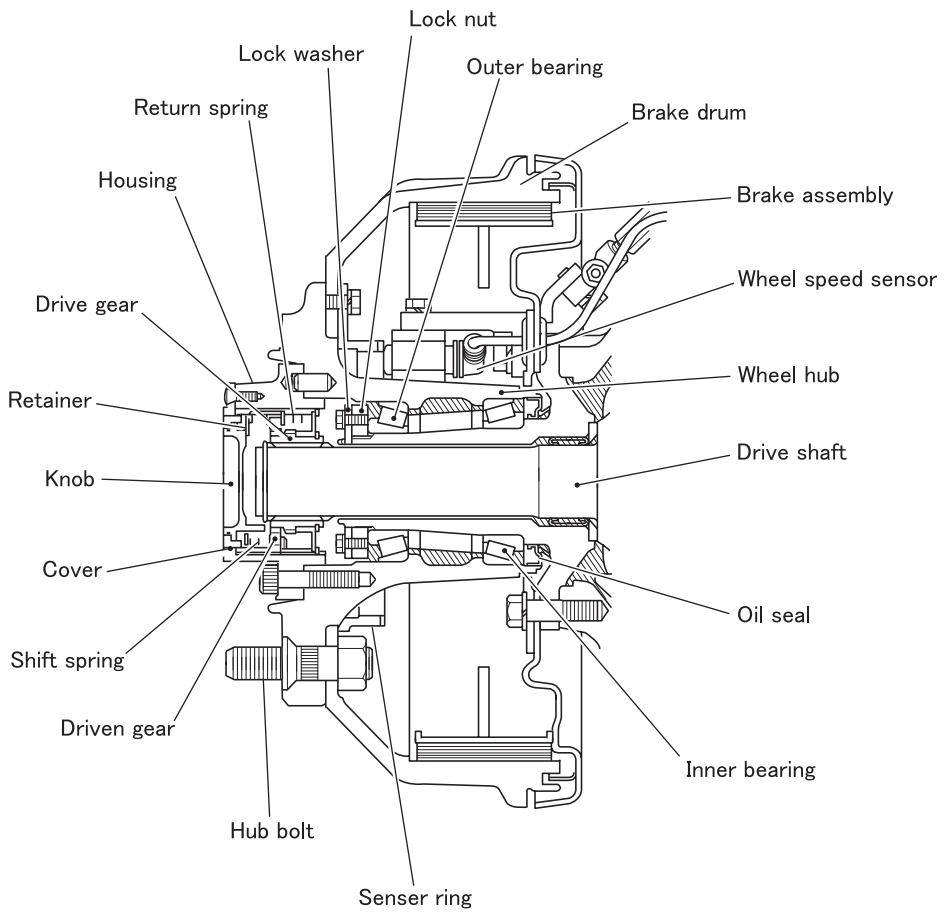

2. Free Wheel Hub

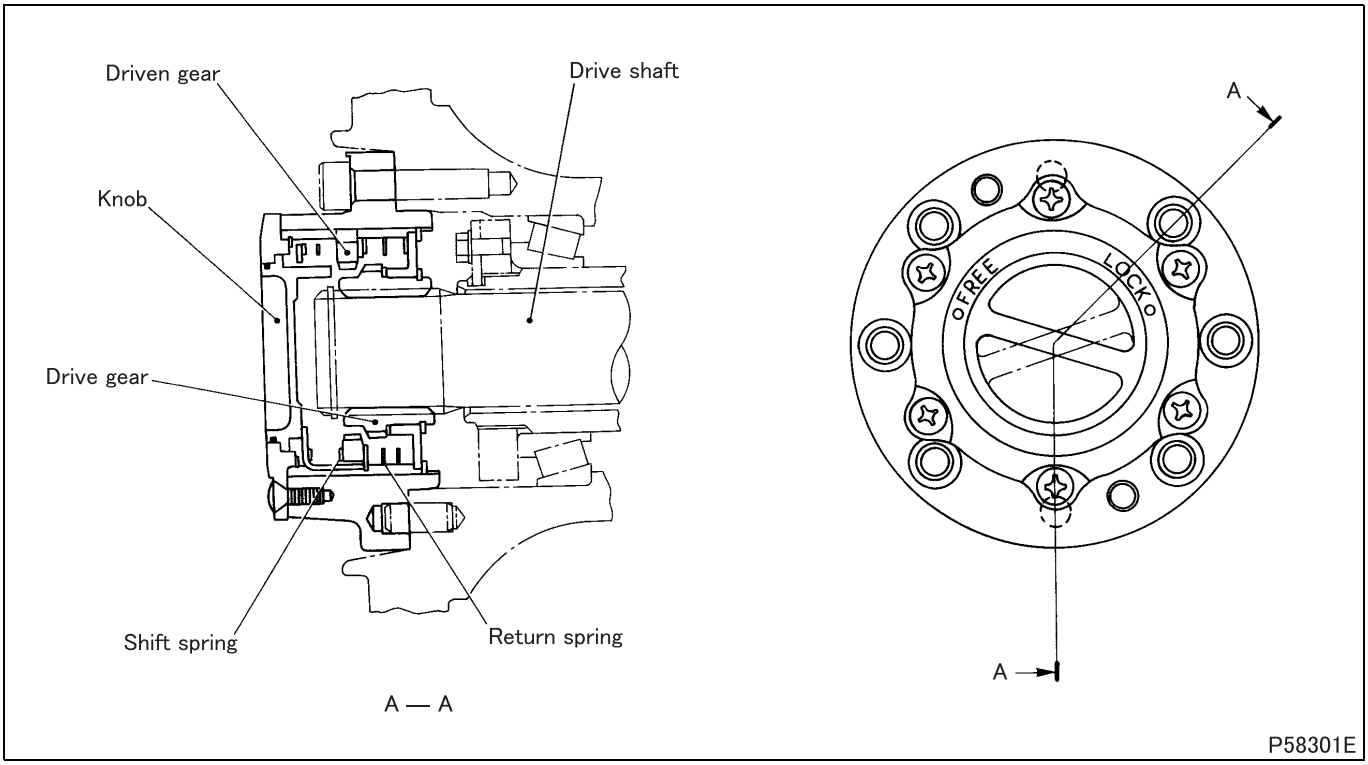

- In the case of a four-wheel drive vehicle, even when it is running in rear-wheel drive only, the drive shaft, differential, propeller shaft, and driving parts of the transfer front drive shaft continue to run due to transmission of rotation from the wheels. This subjects the vehicle drive to a load, and it causes loss of driving power.
  Now, with a free wheel hub, transmission of rotation from the front wheels to the drive shaft is cut, reducing driving loss when running in rear-wheel drive only. This improves fuel efficiency and reduces vibration and noise.
- With a free wheel hub, FREE (cutting of driving power) ↔ LOCK (transmission of driving power) is made easily by manual operation.

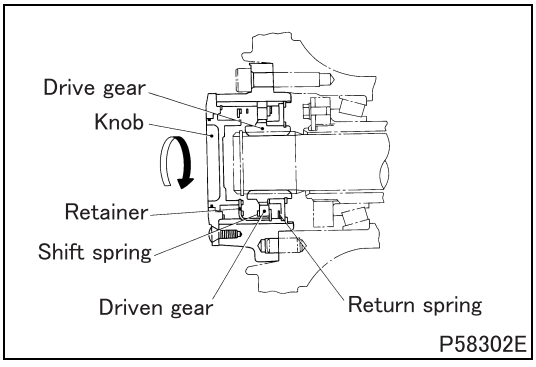

Operating mechanism

● From FREE to LOCK

When knob is turned to LOCK, retainer shifts to the inside along with the shape of the knob, pressing return spring. At this instance, driven gear, being pressed by shift spring, engages with drive gear at the spline, and transmits the driving power.

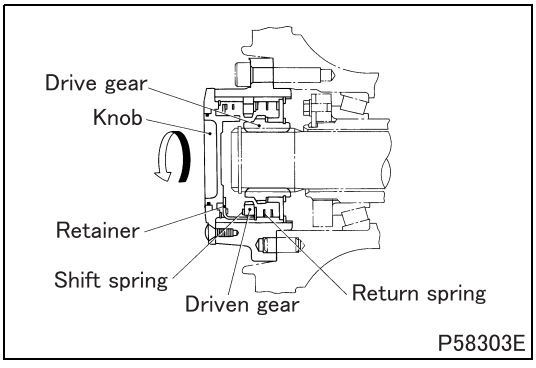

● From LOCK to FREE

When knob is turned to FREE, the action is the reverse of FREE to LOCK, and the driving power is disengaged.

3. Drive Shaft and Steering Knuckle, Axle Housing

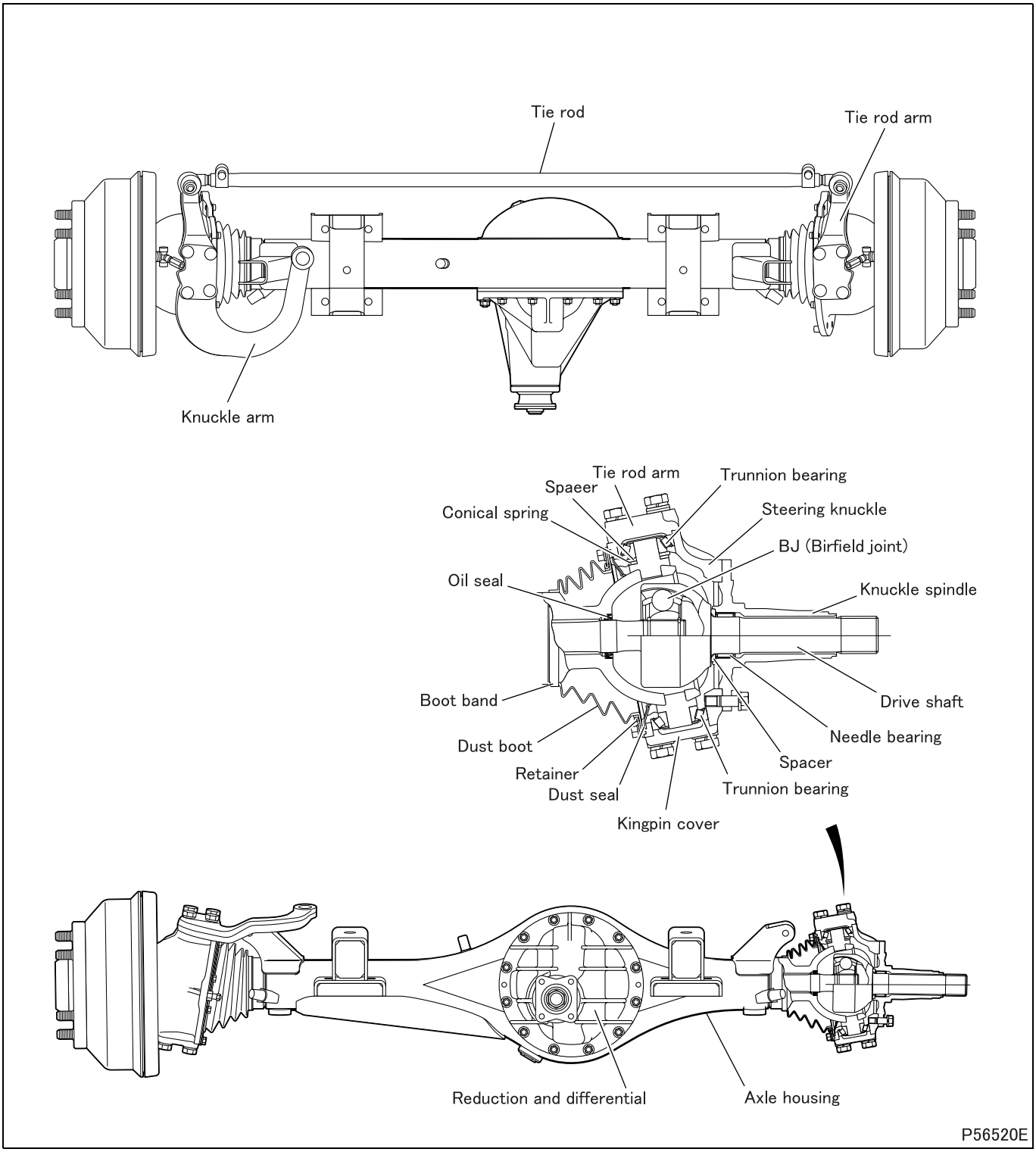

- The drive shaft must transfer power according to rotation speed fluctuations caused by change of steering angle when a vehicle is steered. Therefore, a constant velocity universal joint, which eliminates rotation speed fluctuations between the drive shaft and the driven shaft and transfers power evenly, is used for the Birfield joint of the drive shaft.

4. Reduction and Differential

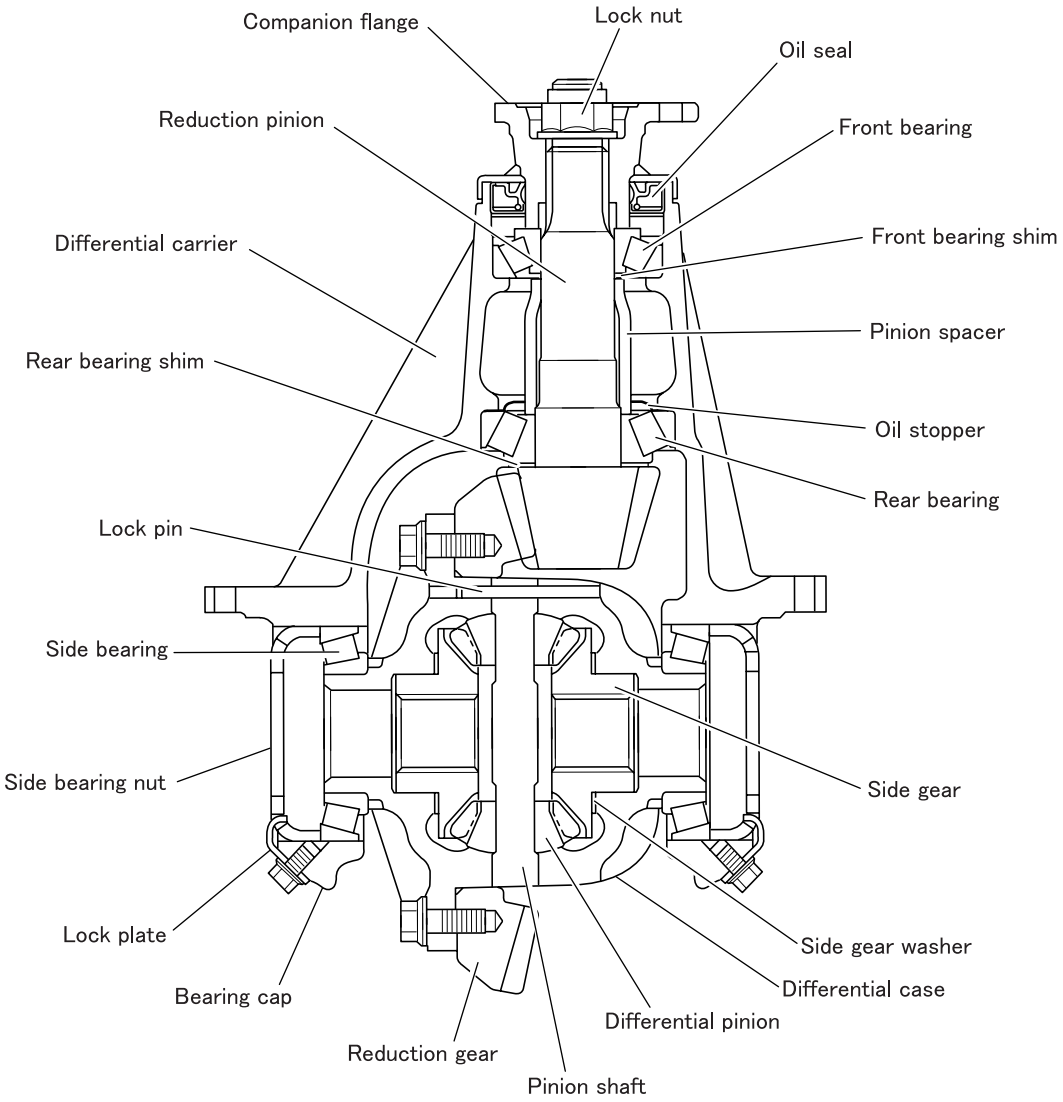

Possible causes	Symptoms	Power transmission insufficient: Noise when starting and changing gears	Power transmission insufficient: Continuous noise while cruising	Power transmission insufficient: Intermittent noise while cruising	Power transmission insufficient: Noise while cornering	Power transmission insufficient: Tires drag while cornering	Power transmission insufficient: Propeller shaft turns but front tires do not turn (on a bench tester)	Oil leakage from companion flange	Oil leakage from differential carrier and axle housing	Oil leakage from drive shaft	Steering wheel shakes	Steering feels stiff	Steering wheel return poor	Unable to steer the steering wheel	Steering pulls to one side	Uneven wear or early wear of front tires	Reference Gr
Free wheel hub, wheel hub, drive shaft and steering knuckle, axle housing	Wheel alignment misaligned										O	O	O			O	
	Steering angle adjustment faulty													O			
	Free wheel hub loose	O	O	O													
	Spline of free wheel hub loose	O															
	Wheel hub bearing seized, worn or rotation faulty		O														
	Wheel hub bearing broken			O													
	Drive shaft bent		O														
	Drive shaft broken						O										
	Drive shaft slips out of spline of side gear						O										
	Drive shaft to spline of side gear backlash excessive	O															
	Birfield joint of drive shaft faulty	O	O				O										
	Trunnion bearing loose				O												
	Trunnion bearing seized, worn or rotation faulty											O					
	Needle bearing of knuckle spindle worn		O														
	Knuckle spindle bent														O		
	Oil seal faulty									O							
	Knuckle arm and tie rod arm tightening nuts loose										O						
	Ball stud tightening nut of tie rod end loose										O						
	Ball stud of tie rod end worn										O						
	Tie rod bent													O			
	Axle housing bent		O														
	Inspection plug and drain plug loose								O								
	Vent plug clogged							O		O							

Possible causes	Symptoms	Power transmission insufficient: Noise when starting and changing gears	Power transmission insufficient: Continuous noise while cruising	Power transmission insufficient: Intermittent noise while cruising	Power transmission insufficient: Noise while cornering	Power transmission insufficient: Tires drag while cornering	Power transmission insufficient: Propeller shaft turns but front tires do not turn (on a bench tester)	Oil leakage from companion flange	Oil leakage from differential carrier and axle housing	Oil leakage from drive shaft	Steering wheel shakes	Steering feels stiff	Steering wheel return poor	Unable to steer the steering wheel	Steering pulls to one side	Uneven wear or early wear of front tires	Reference Gr
Reduction and differential	Gear oil excessive							O									
	Gear oil insufficient	O	O														
	Oil seal faulty							O									
	Sealant faulty								O								
	Reduction and differential assembly mounting nuts loose			O					O								
	Differential carrier cracked or damaged								O								
	Bearing cap mounting bolts loose			O													
	Side bearing seized, worn or rotation faulty		O		O												
	Side bearing broken			O													
	Side bearing preload adjusted incorrectly		O														
	Reduction pinion or reduction gear broken	O		O	O		O										
	Reduction pinion or reduction gear worn		O		O												
	Reduction pinion or reduction gear damaged		O														
	Reduction gear backlash excessive	O															
	Reduction gear backlash or tooth contact adjusted incorrectly		O														
	Starting torque of pinion bearing faulty	O	O														
	Lock nut loose	O	O														
	Front and rear bearings seized		O														
	Front and rear bearings worn		O														
	Front and rear bearings broken			O													

Possible causes	Symptoms	Power transmission insufficient: Noise when starting and changing gears	Power transmission insufficient: Continuous noise while cruising	Power transmission insufficient: Intermittent noise while cruising	Power transmission insufficient: Noise while cornering	Power transmission insufficient: Tires drag while cornering	Power transmission insufficient: Propeller shaft turns but front tires do not turn (on a bench tester)	Oil leakage from companion flange	Oil leakage from differential carrier and axle housing	Oil leakage from drive shaft	Steering wheel shakes	Steering feels stiff	Steering wheel return poor	Unable to steer the steering wheel	Steering pulls to one side	Uneven wear or early wear of front tires	Reference Gr
Reduction and differential	Reduction gear and differential case mounting bolts loose	O		O													
	Side gear backlash excessive	O															
	Side gear or differential pinion broken			O	O	O	O										
	Side gear or differential pinion seized					O	O										
	Side gear or differential pinion worn				O	O											
	Side gear washer worn or damaged			O	O	O											
Front suspension	U-bolt nut of front suspension loose										O						Gr33
	One of front springs worn-out or broken														O		
Tire	Tire inflation pressure uneven										O					O	Gr31
	Tire inflation pressure too little											O					
	Inflation pressure uneven for right and left tires														O		
	Size and type of right and left tires different														O	O	
	Outer diameters of right and left tires remarkably different														O		
	Handling of tires inadequate															O	

M E M O

ON-VEHICLE INSPECTION AND ADJUSTMENT

1. Inspection and Adjustment of Wheel Alignment

Before performing inspection and adjustment of wheel alignment, set the vehicle to the following condition.

- Park the vehicle unloaded on a level place.
- The vehicle needs to be equipped with proper size tires.
- If the wear condition of tires on the right is remarkably different from that of tires on the left, replace tires.
- Tires need inflation to specified pressure.
- Correct if the vehicle tilts due to faulty suspension.
- Service all parts of the front axle and ensure that there is no fault such as the following.
  - Loose trunnion bearing
  - Loose front wheel hub
  - Loose bolts used for tightening various parts of tie rod arm, knuckle arm and tie rod
  - Bend of knuckle spindle and axle housing
- Adjust play at steering wheel properly
- For wheel alignment, which is related to the side slip amount, both wheel alignment and the side slip amount must conform to the standard values.

Service standards (Unit: mm {in.})

Location	Maintenance item	Standard value	Limit	Remedy
–	Toe-in	0 to 6 {0 to 0.24}	–	Adjust
	Camber	1°00’ ± 30’	–	*
	Caster	0°30’ ± 1°00’	–	Replace
	Kingpin inclination angle	9°30’ ± 30’	–	Replace

*: If the measured value deviates from the standard value, abnormalities such as loose trunnion bearing, loose hub bearing and bend of knuckle and front axle housing are suspected. Inspect each part and replace defective parts.

Tightening torque (Unit: N·m {ft.lbs, kgf·m})

Mark	Parts to be tightened	Tightening torque	Remarks
–	Clamp nut (tie rod end clamp fastening)	20 to 29 {15 to 21, 2 to 3}	–

Special tools (Unit: mm {in.})

Mark	Tool name and shape	Part No.	Application
a	Alignment gauge adapter A: ϕ56.5 {2.22}, B: ϕ95 {3.74} 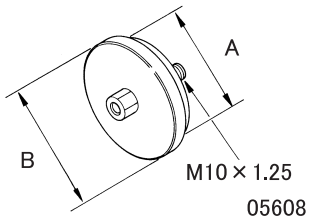	MH062337	Measurement of camber, caster and kingpin inclination angle

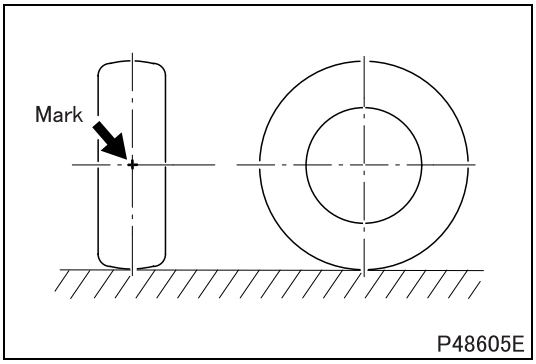

1.1 Inspection and adjustment of toe-in

[Inspection]

- Direct the front wheels exactly to forward running position.
- Put a mark to each tire of right and left at the height of front wheel axis and in the middle of tire width.

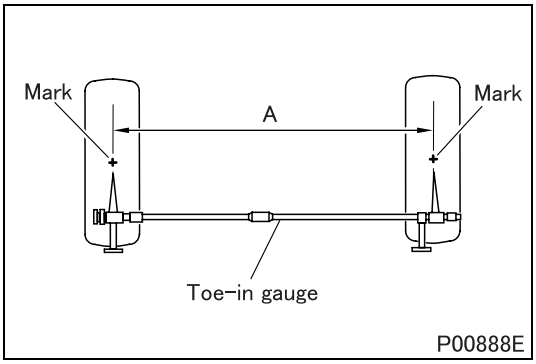

- Align the two points of the toe in gauge with respective marks and read distance A between the marks.

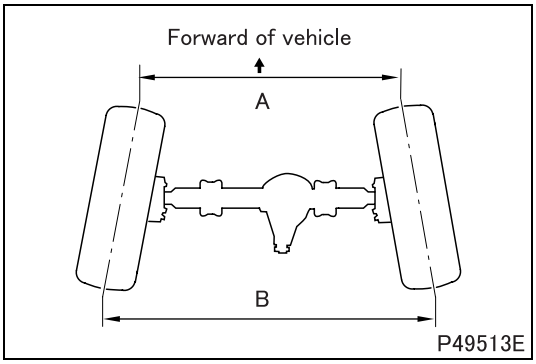

- Push the vehicle to roll the tires 180 degrees.
- Measure distance B between the marks that have moved to the rear of the vehicle.
- If toe-in (difference between A and B) deviates from the standard value, adjust.

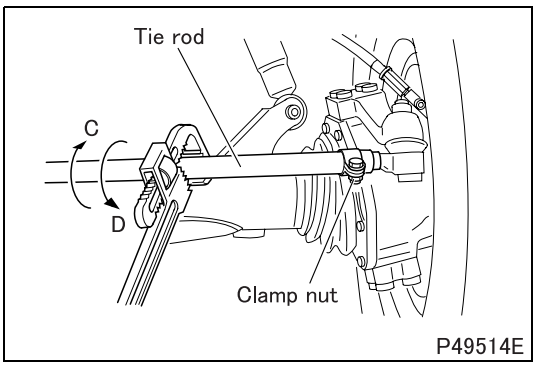

[Adjustment]

- Loosen the clamp nuts on the right and left.
- Turn the tie rod with a pipe wrench to adjust the toe-in.
  C: When adjusting to the toe-out direction
  D: When adjusting to the toe-in direction
- After adjustment, tighten the clamp nut to the specified torque.

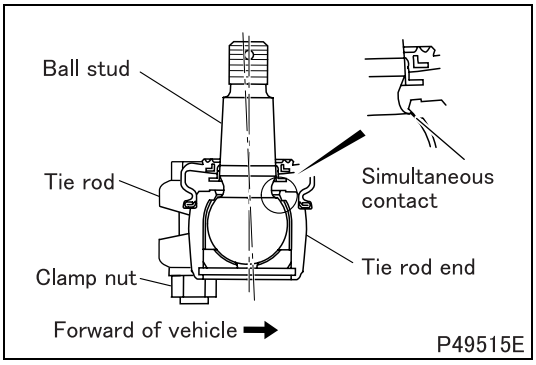

CAUTION ⚠

- **Hold down the tie rod end toward the front of the vehicle with the front wheels directed to forward running position so that the right and left tie rod ends are in contact with the ball studs at the same time. In this state adjust so that the specified toe-in is achieved and tighten the clamp nut to secure the tie rod.**

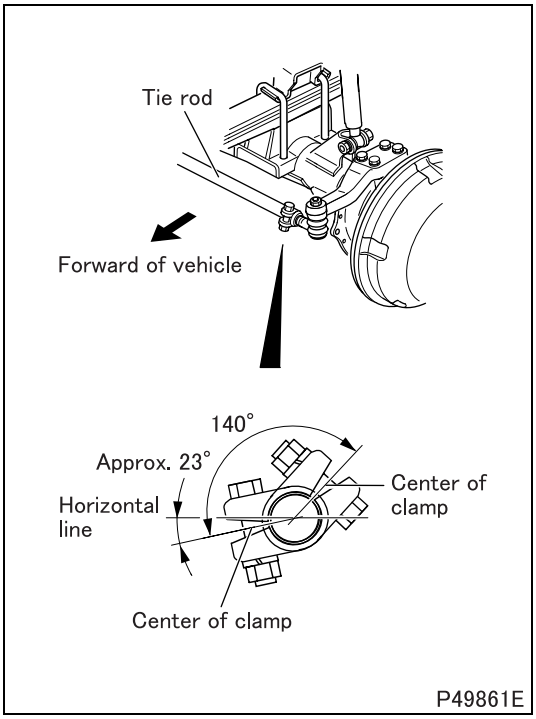

- Make sure that the center of the tie rod clamp is within the illustrated range.
- If it is out of the illustrated range, change the center position of the clamp.

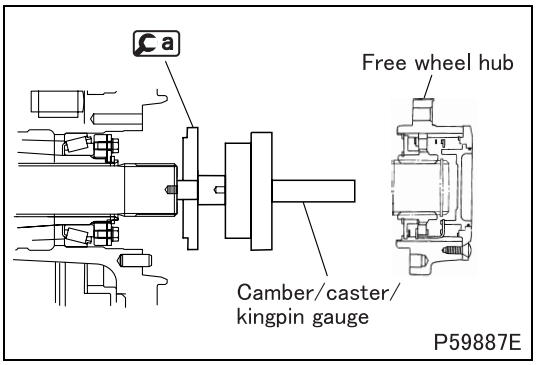

1.2 Inspection of camber

- Direct the front wheels exactly to forward running position.
- Remove the free wheel hub.
- Install Ca on the drive shaft tip.
- Install the camber/caster/kingpin gauge.

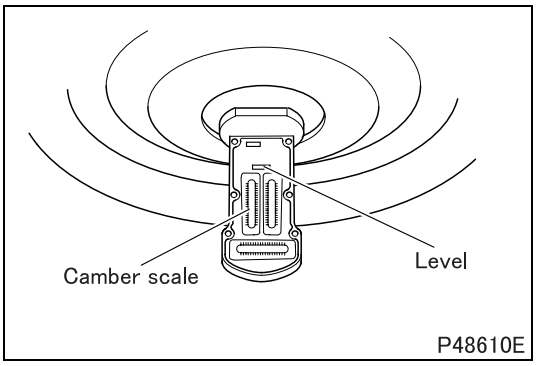

- Place the level in order to have bubble stay in the middle.
- Read center of bubble on camber scale to find the camber. Do the same way for the right and left front tires.
- If the measured value deviates from the standard value, disassemble the front axle for service.

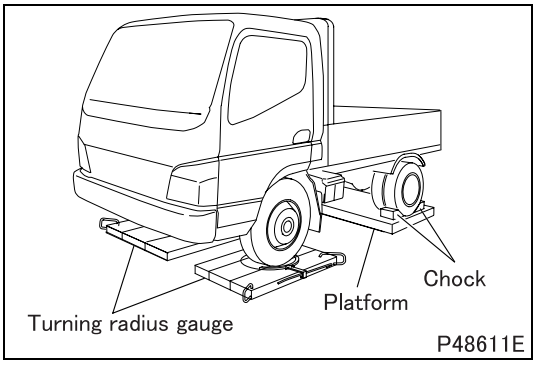

1.3 Inspection of caster and kingpin inclination angle

- Prepare a platform with the same height as the turning radius gauge and place it under the rear wheels so that the vehicle may be placed level.
- Apply chocks to the rear wheels.
- Keep the turning radius gauge locked.
- Jack up the vehicle, and set the right and left front wheels so that respective ground contact area centers of two wheels and turntable centers may meet.

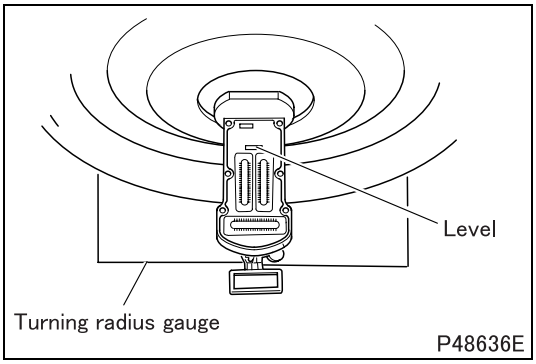

- Unfasten locking of the turning radius gauge, and set the scale to 0 degrees.
- In the same manner as in case of measuring camber in Section **1.2**, attach the camber/caster/kingpin gauge, and set the level so that the bubble comes in the middle.

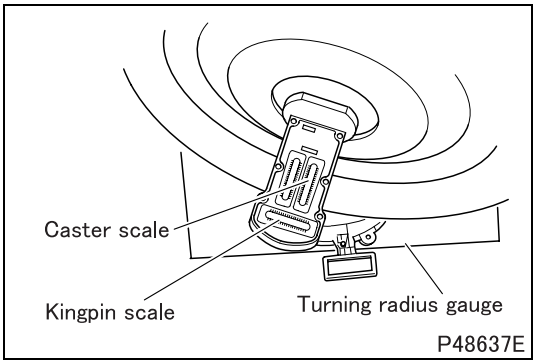

- Apply brake, and with brake applied to the front wheels, turn steering wheel slowly from the point of 0 degrees on the turning radius gauge, until the direction is changed by 20 degrees each to the right side in case of the right front wheel and to the left in case of the left front wheel.

NOTE

- **It is not possible to make exact measurement unless brake is kept applied, because otherwise wheels will turn slightly.**

- At the point where steering has been steered 20 degrees, set the caster scale and the center of the bubble of the kingpin scale to 0 degrees by turning the adjuster.

NOTE

- **Pay attention to the kingpin scale because it has scales for right and left: align the right kingpin scale in case of the right front wheel, and left kingpin scale in case of the left front wheel.**

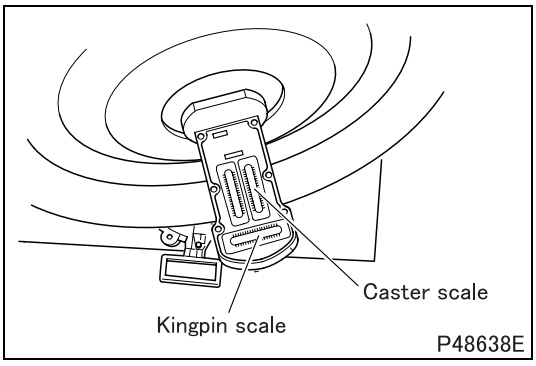

- Reverse this position, turn the steering wheel slowly until the direction of the front wheels changes by 20 degrees in the opposite direction.
- Read the center of bubbles at this position at the caster scale and kingpin scale to find caster and kingpin inclination angles.
- If the measured value deviates from the standard value, disassemble the front axle for service.

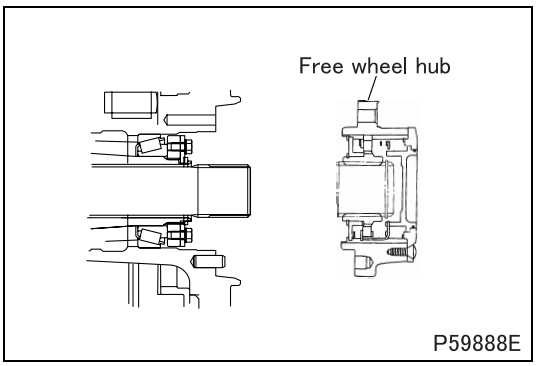

- After inspection, install the free wheel hub.

2. Inspection and Adjustment of Steering Angle

- Perform steering angle inspection and adjustment only after wheel alignment inspection and adjustment has been completed.

Service standards

Location	Maintenance item		Standard value	Limit	Remedy
–	Steering angle	Inside (outside steering angle is for reference only)	35° $^{0}_{-2}$° (34°)	–	Adjust

Tightening torque (Unit: N·m {ft.lbs, kgf·m})

Mark	Parts to be tightened	Tightening torque	Remarks
–	Lock nut (knuckle stopper bolt tightening)	96 ± 12 {71 ± 9, 9.75 ± 1.25}	–

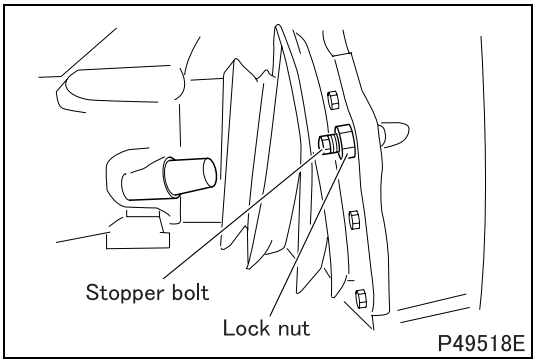

- Set the turning radius gauge and a platform on the vehicle in the same manner as in case of caster and kingpin inclination angle measurement performed in Section **1.3**.
- Turn the steering wheel right or left completely from the position where the turning radius gauge is set to 0 degrees, and measure the steering angle, reading the scale of the turning radius gauge.
- If the measured value deviates from the standard value, adjust with the knuckle stopper bolt and tighten the lock nut to the specified torque.

3. Inspection of Side Slip

- Perform side slip inspection only after wheel alignment inspection and adjustment has been completed.
- For the side slip amount, which is related to wheel alignment, both the side slip amount and wheel alignment must conform to the standard values.

Service standards (Unit: mm {in.})

Location	Maintenance item	Standard value	Limit	Remedy
–	Side slip amount (per 1 m {3.3 ft})	3 {0.12} or less	–	Adjust

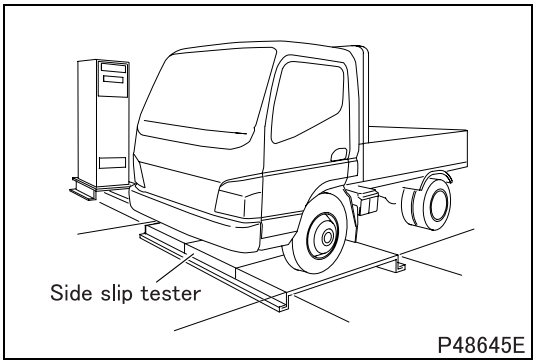

- Set the front wheels exactly to forward running position.
- Move the vehicle forward past the side slip tester as slowly as possible to inspect side slip.

NOTE

- **Pay attention to the following when moving over the side slip tester.**
- **Be sure to hold steering exactly at the forward running position, and make no turn.**
- **Do not apply brake.**
- **Keep the speed constant.**

- If the measured value deviates from the standard value, inspect and adjust wheel alignment.

4. Inspection of Tie Rod End Ball Joint

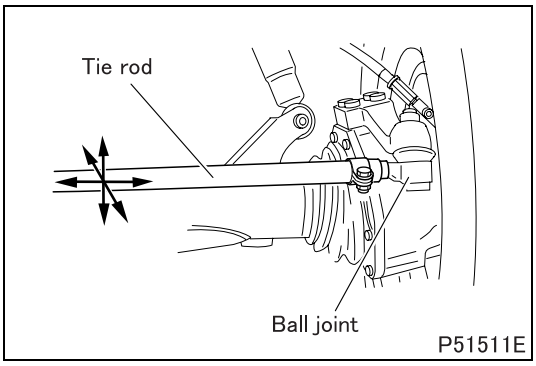

(1) Play

- Hold the tie rod section of the tie rod with the vehicle kept stationary, and move it in the back-and-forth, up-and-down and right-and-left directions to check for play at ball joints of the tie rod end.

NOTE

- **Be sure to check for play at ball joints of both right and left sides of the tie rod.**

- If there is play, replace the tie rod end of the tie rod.

(2) Dust cover

- Check the dust cover for wear, cracks and other damage.
- If there is any abnormality, replace the tie rod end.

5. Inspection and Replacement of Axle Oil

Tightening torque (Unit: N·m {ft.lbs, kgf·m})

Mark	Parts to be tightened	Tightening torque	Remarks
–	Inspection plug	110 ± 10 {81 ± 7.4, 11 ± 1}	–
	Drain plug		

Lubricant and/or sealant

Mark	Points of application	Specified lubricant and/or sealant	Quantity
–	Axle housing	Normal: Maximum air temperature during operation below 40°C {104°F} API GL-5 SAE 90 Hot area: Maximum air temperature during operation above 40°C {104°F} API GL-5 SAE 140	3 L {3.2 qts.}

- Use the gear oil with a SAE viscosity grade of 140 when a vehicle is used under heavily-loaded, severe conditions such as continuous driving on uphill grades. However, the air temperature must be above 10°C {50°F}.

WARNING ⚠

- **The oil temperature is high immediately after the vehicle has stopped, so take care not to scald yourself.**

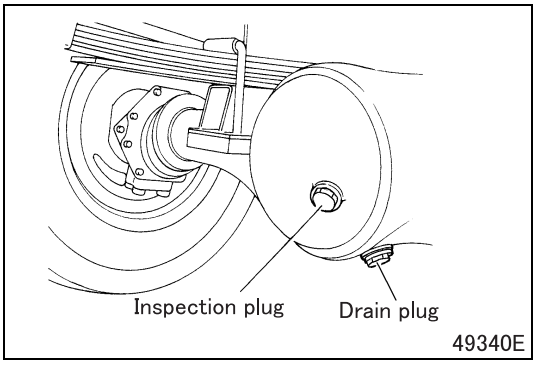

[Inspection]

(1) Inspection of oil quantity

- Remove the inspection plug, and check that gear oil is filled up to the neck.
- If gear oil is not sufficient, fill oil from the inspection plug hole up to the neck.

(2) Inspection of oil quality and inclusions

- When draining gear oil, check for oil quality, metal chips and metal powder.
- If an abnormally large amount of metal chips and metal powder is found, disassemble the assembly for service, as abnormalities may be caused inside.

[Replacement]

- Remove the drain plug to drain gear oil. Drainage can be made quickly with the inspection plug removed.
- As the drain plug is a magnet, clean it before installation.
- Fill the specified quantity of gear oil from the inspection plug hole.
- After filling, check that gear oil is filled up to the neck. If oil is not sufficient, replenish it.

M E M O

WHEEL HUB AND BRAKE DRUM

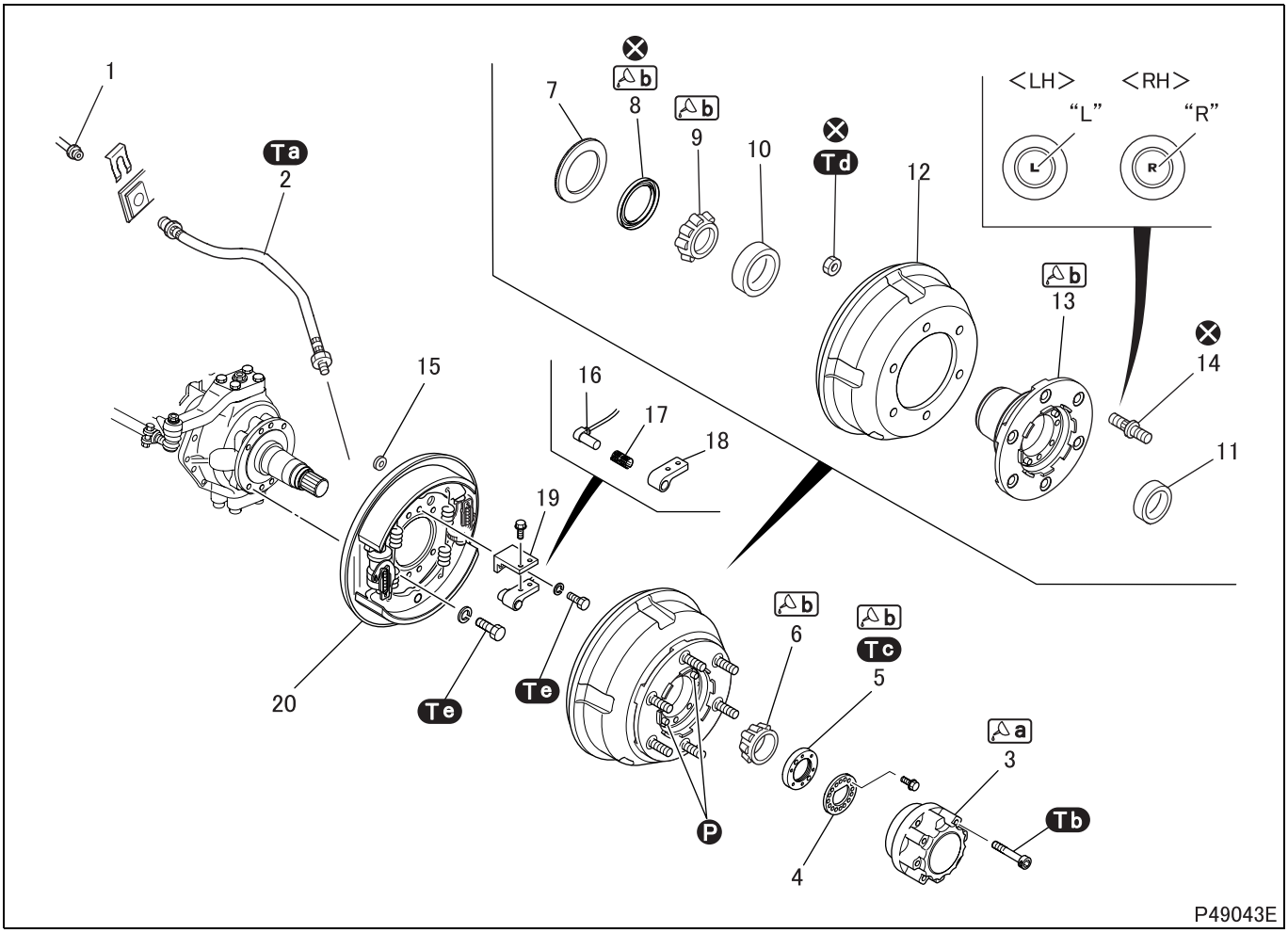

● **Disassembly sequence**

1 Brake pipe
2 Brake hose
3 Free wheel hub
4 Lock washer
5 Lock nut
6 Outer bearing inner race
7 Anti-lock brake system rotor
8 Oil seal
9 Inner bearing inner race
10 Inner bearing outer race
11 Outer bearing outer race
12 Brake drum
13 Wheel hub
14 Hub bolt
15 Grommet
16 Wheel speed sensor
17 Spring spacer
18 Sensor holder
19 Bracket
20 Front drum brake (See Gr35A.)

Ⓟ: Locating pin
⊗: Non-reusable parts

CAUTION ⚠

- **Plug the brake hose to prevent entry of dust and dirt after it has been removed.**

NOTE

- **Do not remove the anti-lock brake system rotor unless replacing it.**
- **Do not disassemble the brake drum and wheel hub unless replacing them.**

● **Assembly sequence**

Follow the disassembly sequence in reverse.

CAUTION ⚠

- **Make sure that the brake lining surface of the front drum brake and the inner surface of the brake drum are free from grease to avoid malfunction of brakes.**
- **Make sure that the brake hose is not twisted when installing it.**
- **Adjust brake shoe clearance after assembly. (See Gr35A.)**

Service standards (Unit: mm {in.})

Location	Maintenance item		Standard value	Limit	Remedy
–	Starting torque of wheel hub bearing (tangential force at hub bolt position with oil seal assembled)		2 to 3.9 N·m {1.5 to 2.9 ft.lbs, 0.20 to 0.40 kgf·m} (tangential force: 17.7 to 34.3 N {4.0 to 7.7 lbs., 1.8 to 3.3 kgf})	–	Adjust or replace
12	Brake drum	Inside diameter	320 {12.60}	322 (※ 321) {12.68 (※ 12.64)}	Correct or replace
		Cylindricity	0.05 {0.0020}	0.20 {0.079}	

※ shows the correction limit value.

Tightening torque (Unit: N·m {ft.lbs, kgf·m})

Mark	Parts to be tightened		Tightening torque	Remarks
Ta	Brake hose		12.7 to 16.7 {9.4 to 12, 1.3 to 1.7}	–
Tb	Bolt (free wheel hub mounting)		68.6 ± 4.9 {51 ± 3.6, 7.0 ± 0.5}	–
Tc	Lock nut	Primary tightening	113 ± 15 {83 ± 11, 11.5 ± 1.5}	–
		Secondary tightening after complete tightening	25 ± 5 {18 ± 3.6, 2.5 ± 0.5}	–
Td	Nut (brake drum and wheel hub mounting)		343 ± 39 {253 ± 29, 35 ± 4}	–
Te	Bolt (bracket mounting)		123 ± 5 {90 ± 3.6, 12.5 ± 0.5}	–
	Bolt (front drum brake mounting)			

Lubricant and/or sealant

Mark	Points of application	Specified lubricant and/or sealant	Quantity
a	Wheel hub contact surface of free wheel hub	ThreeBond 1104J or 1215	As required
b	Thread area of lock nut	Wheel bearing grease [NLGI No. 2 (Li soap)]	As required
	Pack space between rollers of outer bearing inner race and inner bearing inner race		
	Lip area of oil seal		
	Pack inside of wheel hub		※ 60 ± 10 g {2.12 ± 0.35 oz.}

※ For a wheel hub

Special tools (Unit: mm {in.})

Mark	Tool name and shape	Part No.	Application
ⓐ	Lock nut adjust tool A: 70 {2.76} B: □12.7 {0.50} 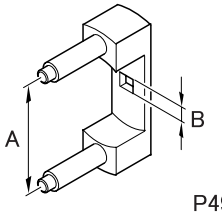 P49612	MB999151	Removal and installation of lock nut
ⓑ	Hub puller A: Hub puller body B: Attachment C: Bolt D: φ50 {1.97} E: 165 {6.50} 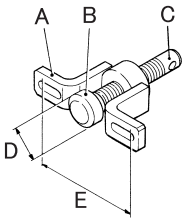 05618	MB999070 A: MB999071 B: MB999073 C: MB999072	Removal of wheel hub and brake drum
ⓒ	Oil seal installer A: φ84 {3.31} B: φ70 {2.76} 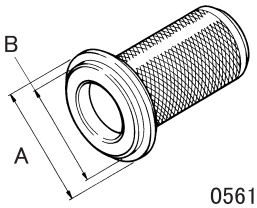 05619	MB999097	Installation of oil seal (to be used in combination)
ⓓ	Oil seal installer A: φ105 {4.13} B: φ84 {3.31} C: φ71 {2.80} 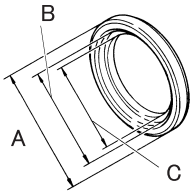 51038	MB999153	
ⓔ	Bearing installer A: φ70 {2.76} B: φ57 {2.24} 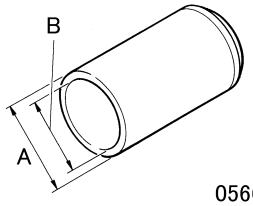 05668	MB999100	Installation of inner bearing outer race (to be used in combination with ⓕ) Installation of outer bearing outer race (to be used in combination with ⓖ)
ⓕ	Bearing installer A: φ94.5 {3.72} B: φ60 {2.36} C: φ92.5 {3.64} 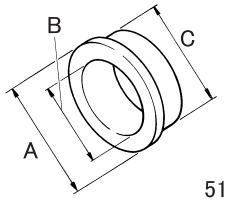 51039	MB999069	Installation of inner bearing outer race (to be used in combination with ⓔ)
ⓖ	Bearing installer A: φ88.5 {3.48} B: φ51 {2.01} C: φ71 {2.80} 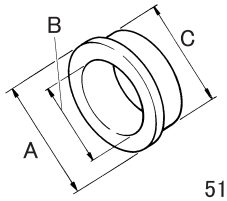 51039	MB999099	Installation of outer bearing outer race (to be used in combination with ⓔ)

◆Removal procedure◆

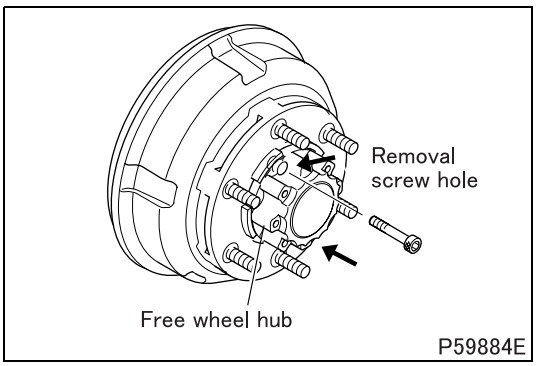

■ **Removal: Free wheel hub**

- Screw two bolts evenly into the free wheel hub removal screw holes to remove the free wheel hub.

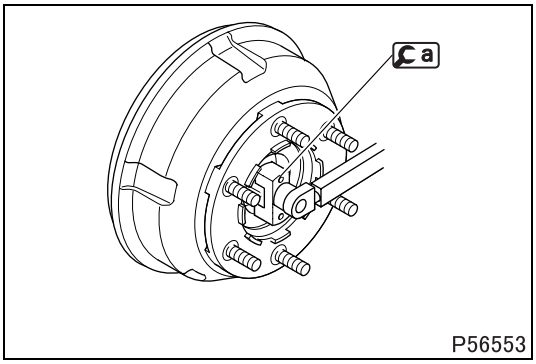

■ **Removal: Lock nut**

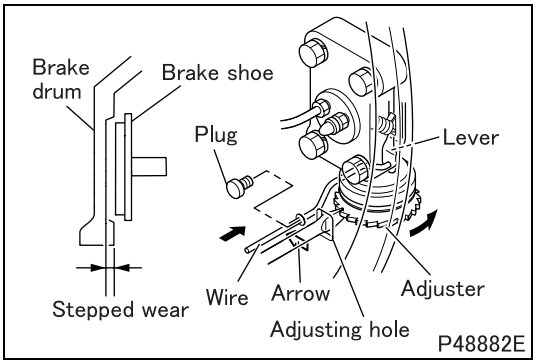

■ **Removal: Wheel hub and brake drum**

- If the brake drum has stepped wear and the wear prevents the wheel hub and brake drum from being removed, the removal can still be effected by taking the following procedure.
  - Insert a wire of approx. ϕ2 mm {0.079 in.} into the hole from which the plug has been removed, and lift up the adjust lever of the wheel cylinder.
  - Turn the adjuster from the adjust hole in the opposite direction to the arrow on the backing plate to increase the clearance between the brake drum and the brake shoe. Then, remove the wheel hub and brake drum.

CAUTION ⚠

- **Correct or replace the brake drum if any fault is found.**

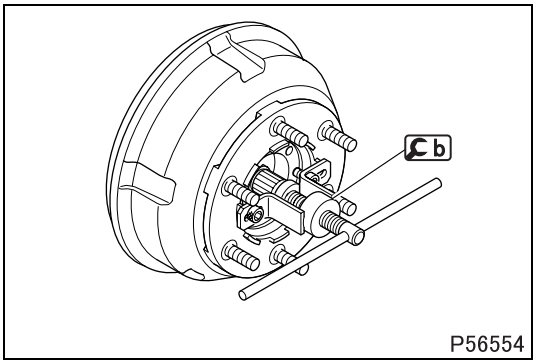

- Install b using free wheel hub mounting bolts to remove the wheel hub and brake drum.

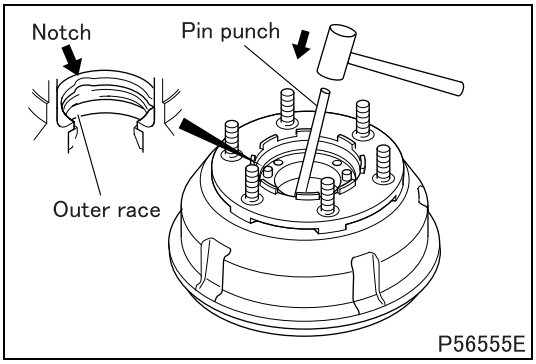

■ **Removal: Inner bearing outer race**

- Drive out the inner bearing outer race by tapping evenly at three indented parts in the wheel hub.

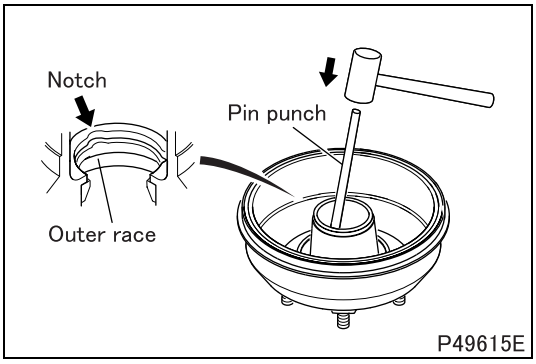

■ **Removal: Outer bearing outer race**

- Drive out the outer bearing outer race by tapping evenly at three indented parts in the wheel hub.

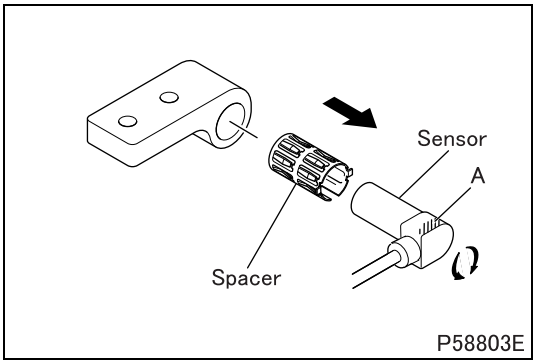

■ **Removal: Wheel speed sensor**

- Hold shaded section A of wheel speed sensor with pliers, and remove the sensor by twisting it slightly in left and right directions.

CAUTION ⚠

- **When removing the wheel speed sensor, never apply a force to it such as tapping it with a hammer, prying it with a screwdriver and pulling the harness, as doing so causes the wire to be broken.**
- **If the wheel speed sensor pulls out lightly, replace the spring spacer.**

◆Inspection procedure◆

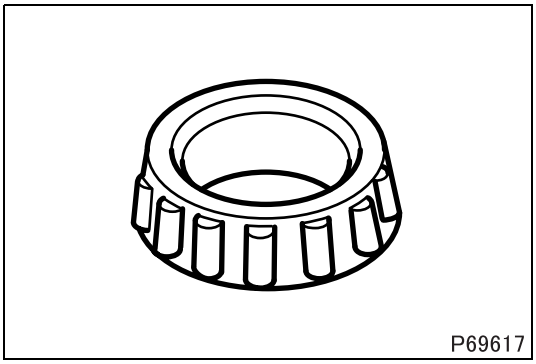

■ **Inspection: Outer bearing inner race**

- Inspect the outer bearing inner race after cleaning the bearing to remove grease completely.
- If any damage, wear, or poor rotating condition is evident in the inner race, replace it with a new one.
- The inner race and outer race should be replaced as a set.

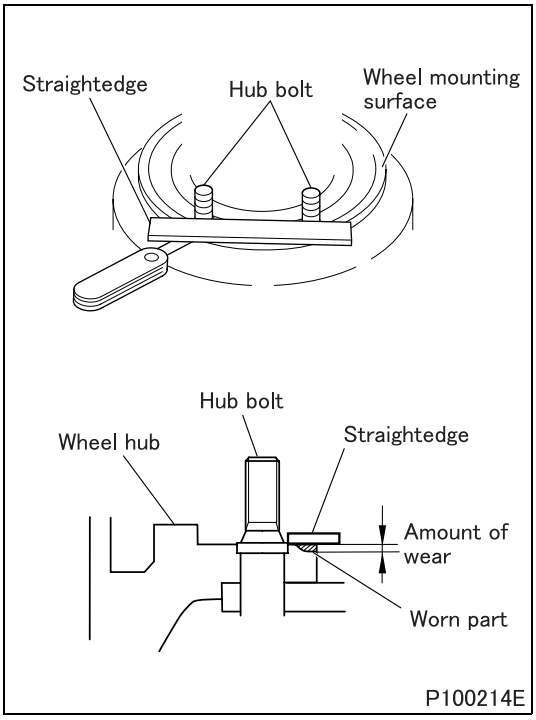

■ **Inspection: Wheel hub**

(1) Visual inspection

- Check the disc wheel mounting surface of the wheel hub by watching and touching. If there is damage or crack on it, replace the wheel hub.
- Make sure that there is not rust, dust, paint or foreign body on the disc wheel mounting surface of the wheel hub to prevent the wheel nut to loosen.
- If any abnormality is found, remove it with sandpaper.

(2) Wear in disc wheel mounting part of wheel hub

- Clean the wheel mounting surface of the wheel hub before inspection.
- Place a straightedge on the hub so as to contact to the two hub bolts on the disc wheel mounting surface.

CAUTION ⚠

- **Make sure that the straightedge does not run onto the hub bolt.**

- Using feeler gauges to measure the amount of wear at the outer periphery of the wheel hub.
  Measure the amount of wear in the area of every hub bolt.
- If the amount of wear at any point exceeds the following standard value, inspect the crack check of wheel hub.
  Wear standard value: 0.8 mm

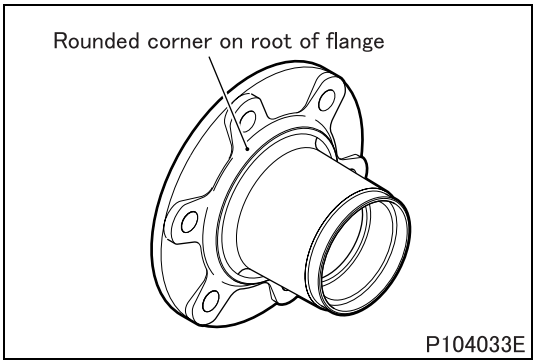

(3) Crack check

- Check if there is not crack on the entire rounded corner on the root of flange of the wheel hub by magnetic particle or liquid penetrant testing. If crack is found, replace the wheel hub.
- If crack is found on the wheel hub bolt, replace it.
- If there is crack or stepped wear on the wheel hub mounting surface of wheel disc, replace it. (See Gr31.)

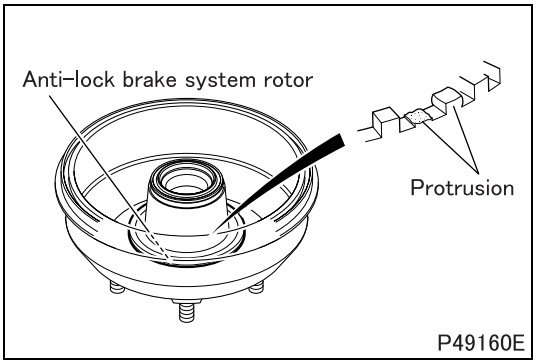

■ **Inspection: Anti-lock brake system rotor**

[Inspection]

- Check protrusions of the anti-lock brake system rotor for chipping and flattening.
- If any abnormality is found, replace the anti-lock brake system rotor.

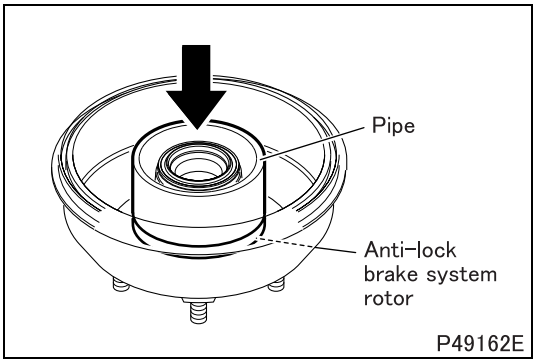

[Installation]

- Warm the anti-lock brake system rotor to approximately 150°C {302°F}.
- Install the anti-lock brake system rotor and wheel hub evenly using a pipe so as not to allow them to tilt.

WARNING ⚠

- **Handling the warmed rotor by bare hand causes scald.**

■ **Inspection: Brake drum**

- If cylindricity of the brake drum exceeds the limit or the brake drum has seams, cut the brake drum integrally with the wheel hub within the range of the correction limit.

■ **Inspection: Inner bearing inner race**

- Inspect the inner bearing inner race in the same manner as for the outer bearing inner race.
  (See **"■ Inspection: Outer bearing inner race".**)

◆Installation procedure◆

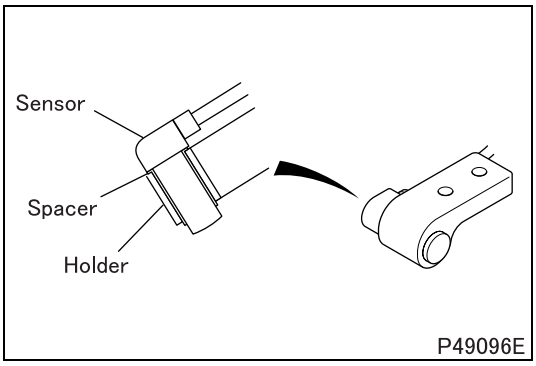

■ **Installation: Wheel speed sensor**

- Install the wheel speed sensor so that it securely contacts the sensor holder together with the spring spacer.

CAUTION ⚠

- **When installing the wheel speed sensor, never apply a force to it such as tapping it with a hammer, prying it with a screwdriver and pulling the harness, as doing so causes the wire to be broken.**

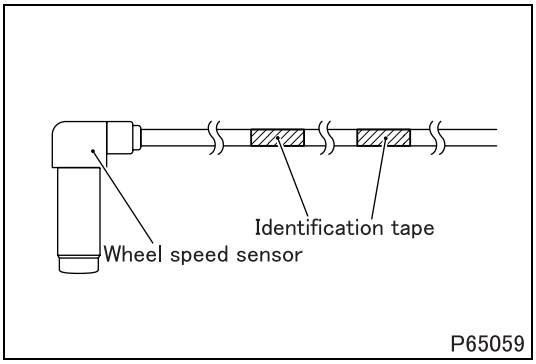

- Using clips, secure in place the wheel speed sensor harness at the identification tape portions, ensuring that the harness is free of kinks, slack and/or interference with other parts.

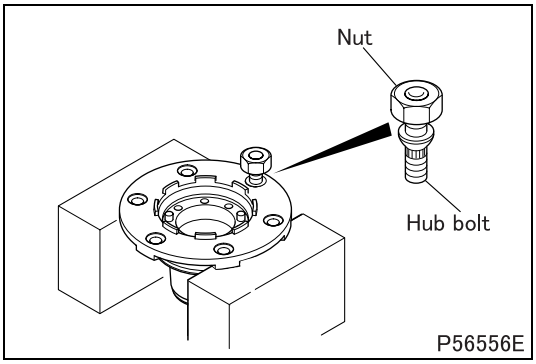

■ **Installation: Hub bolt**

- Screw the nut into the hub bolt until just before they become flush.
- Drive the hub bolt into the wheel hub vertically by hitting the end face of the nut.

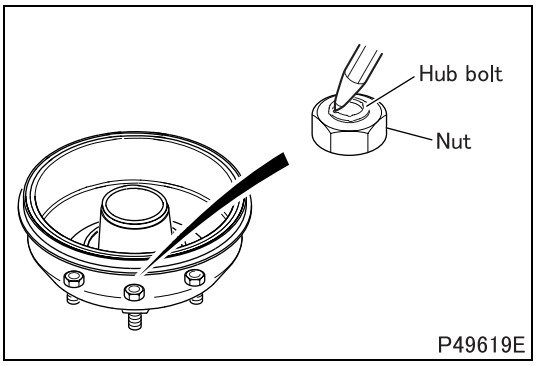

- Assemble the brake drum and wheel hub with the hub bolt. After tightening the nut to the specified torque, caulk it with a punch.

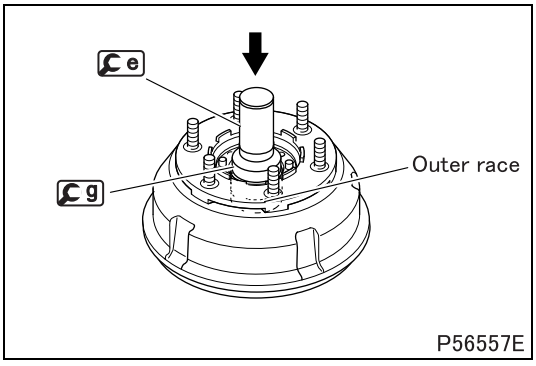

■ **Installation: Outer bearing outer race**

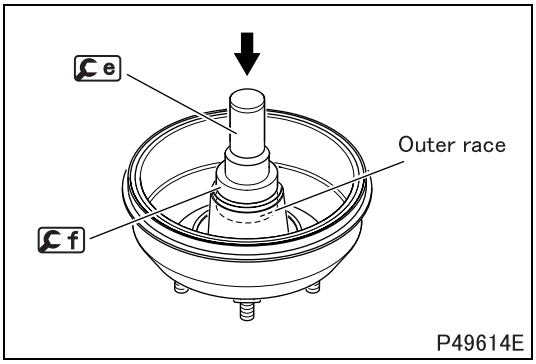

■ **Installation: Inner bearing outer race**

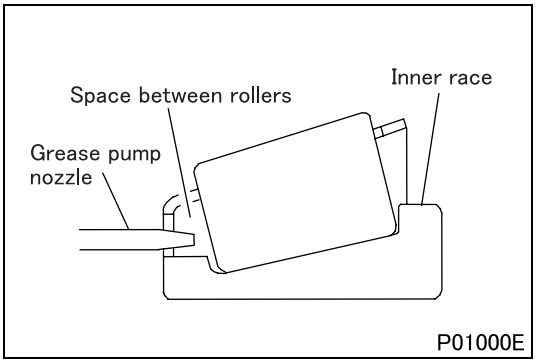

■ **Installation: Packing grease in inner bearing inner race**

- Insert the grease pump nozzle into the space between rollers of the inner bearing inner race to pack grease sufficiently.

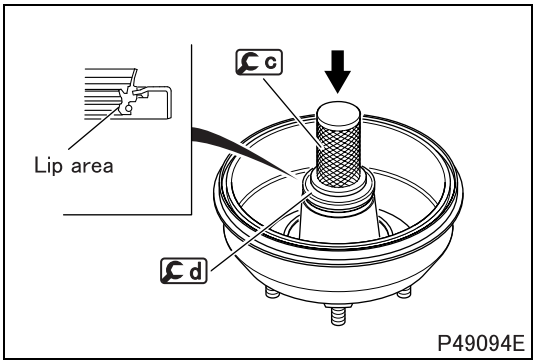

■ **Installation: Oil seal**

- Apply grease to the lip area of the oil seal and install it on the wheel hub in the illustrated direction.

■ **Installation: Packing grease in outer bearing inner race**

- Follow the same procedure as for packing the inner bearing inner race with grease.
  (See **"■ Installation: Packing grease in inner bearing inner race".**)

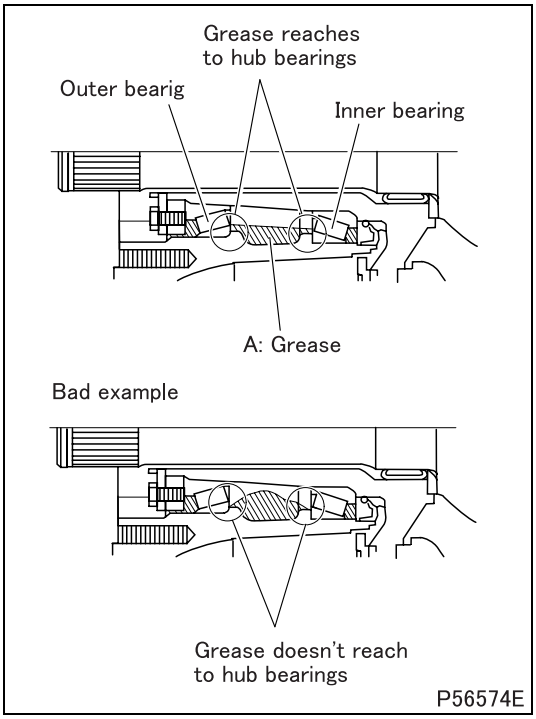

■ **Installation: Packing grease inside of wheel hub**

- Apply specified amount of grease to inside A of wheel hub so that the grease reaches to inner bearing and outer bearing as illustrated.

CAUTION ⚠

- **Applying grease as illustrated in the "bad example" causes the wheel hub bearing to seize.**

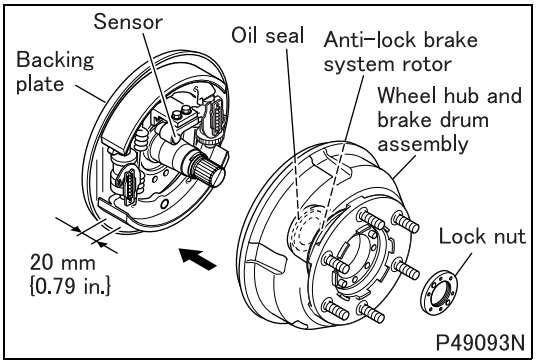

■ **Installation: Wheel hub and brake drum**

- Slowly install the wheel hub and brake drum assembly so as not to cause damage to the oil seal and anti-lock brake system rotor.

CAUTION ⚠

- **If the anti-lock brake system rotor is damaged, wheel speed sensor signals become abnormal, causing the anti-lock brake system to malfunction.**

- Position the wheel hub and brake drum assembly only 20 mm {0.79 in.} before the backing plate, and hereafter slowly tighten the lock nut to install the wheel hub and brake drum assembly.

CAUTION ⚠

- **Be careful that installing the wheel hub and brake drum assembly without leaving a clearance with the backing plate may damage the wheel speed sensor.**

■ **Adjustment: Starting torque of wheel hub bearing**

CAUTION ⚠

- **Unless this adjustment procedure is performed, seizure of the wheel hub bearing can be caused.**

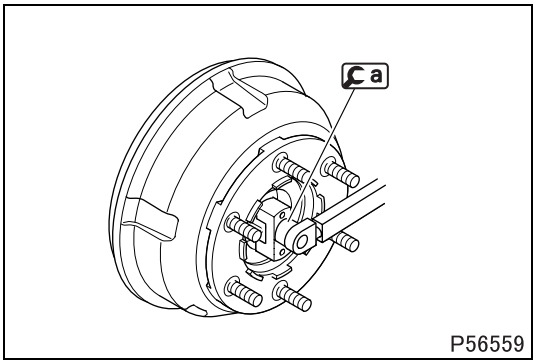

[Adjustment]

- Tighten the lock nut to the specified torque (primary tightening) while turning the wheel hub and brake drum assembly, and then loosen it completely.
- Smooth operation of the outer bearing and inner bearing by turning the wheel hub and brake drum assembly several times, and then tighten the lock nut to the specified torque (secondary tightening).

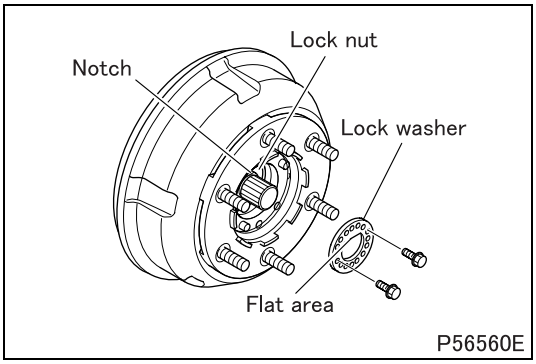

- Insert the flat area of the lock washer, aligning it with the notch of the knuckle spindle, and mount two bolts diagonally to the lock nut.
- If the lock nut does not align with a screw hole of the lock washer, align by loosening the lock nut. Make sure that there is no play in the axial direction.

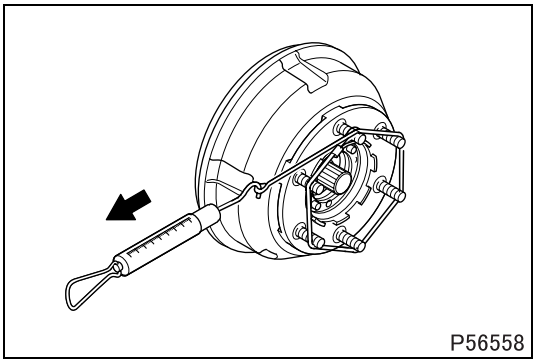

[Inspection]

- Make sure that there is no drag in the brake lining and brake drum.
- If any abnormality is found, adjust the brake shoe clearance.
- Measure the tangential force at the hub bolt position using a spring balancer.

CAUTION ⚠

- **Do not assemble the free wheel hub when inspecting.**

- If the tangential force is within the specified value, the starting torque conforms to the standard value. If the measured value deviates from the specified value, repeat adjustment because the adjustment of the lock nut may be insufficient.
- If the result is found to be abnormal, replace the outer and inner bearings.

M E M O

DRIVE SHAFT AND STEERING KNUCKLE

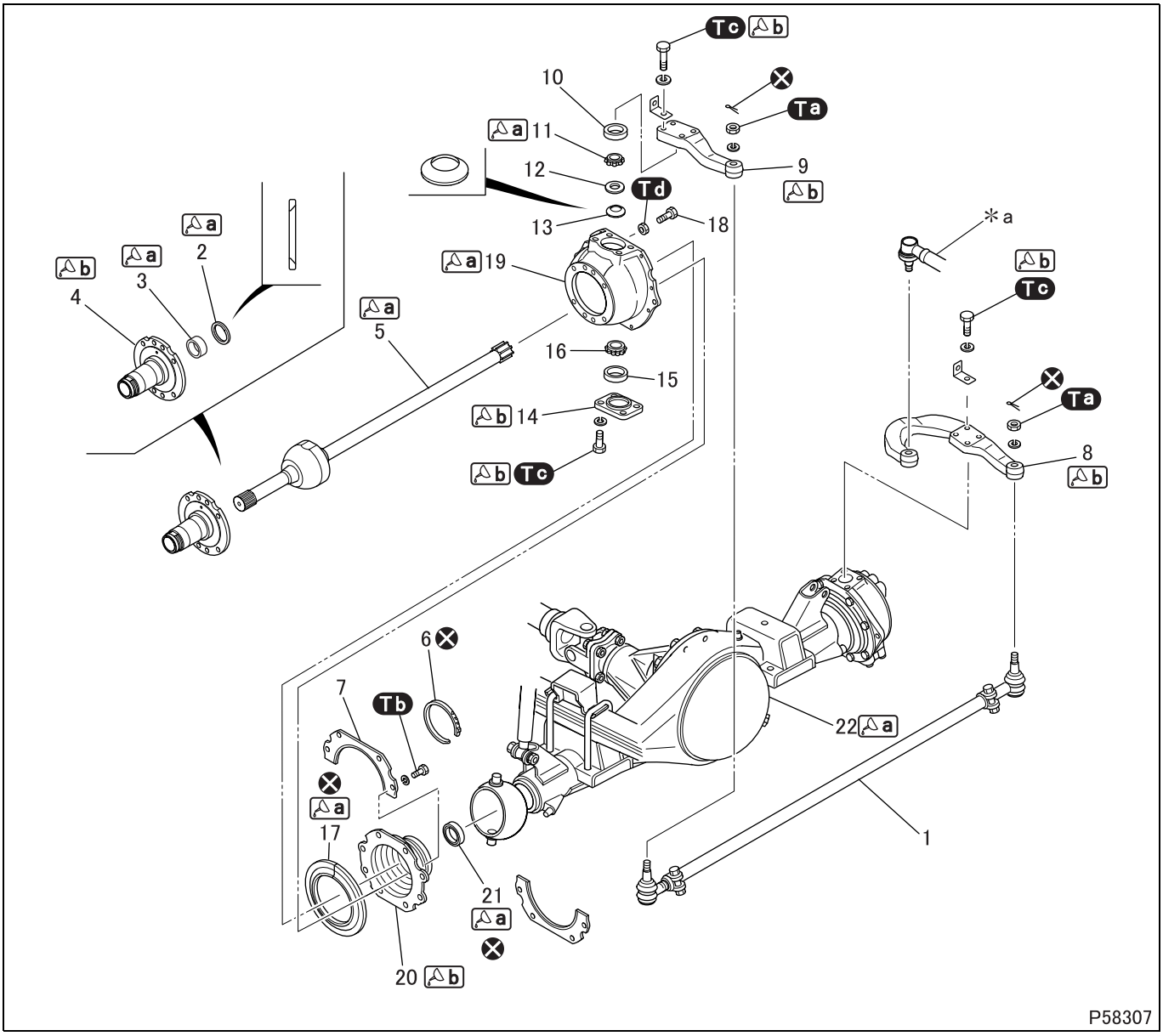

● **Disassembly sequence**

1 Tie rod (See later section.)
2 Spacer
3 Needle bearing
4 Knuckle spindle
5 Drive shaft
6 Boot band
7 Retainer
8 Knuckle arm
9 Tie rod arm
10 Trunnion bearing outer race
11 Trunnion bearing inner race
12 Spacer
13 Conical spring
14 Kingpin cover
15 Trunnion bearing outer race
16 Trunnion bearing inner race
17 Dust seal
18 Knuckle stopper bolt
19 Steering knuckle
20 Dust boot
21 Oil seal
22 Axle housing (See later section.)

***a**: Drag link
⊗: Non-reusable parts

CAUTION ⚠

- **When removing the tie rod, take care not to deform or damage the dust cover.**

NOTE

- **Do not disassemble the drive shaft.**

● **Assembly sequence**

Follow the disassembly sequence in reverse.

Repair kit: Repair kit grease

Service standards (Unit: mm {in.})

Location	Maintenance item		Standard value	Limit	Remedy
–	Starting torque of steering knuckle (tangential force at knuckle arm and tie rod arm end on tie rod)		4.8 ± 1.3 N·m {3.57 ± 0.98 ft.lbs, 0.49 ± 0.136 kgf·m} (tangential force: 28 ± 7.8 N {6.3 ± 1.8 lbs, 2.9 ± 0.8 kgf})	–	Adjust or replace
5	Drive shaft	Bend (inner shaft)	0.75 or less	1.5	Replace
		Play in Birfield joint axial direction	0.8 or less	–	Replace

Tightening torque (Unit: N·m {ft.lbs, kgf·m})

Mark	Parts to be tightened	Tightening torque	Remarks
Ta	Nut (tie rod mounting)	93.2 ± 24.5 {69 ± 18, 9.5 ± 2.5}	–
Tb	Bolt (retainer and dust boot mounting)	4 ± 1 {2.9 ± 0.7, 0.4 ± 0.1}	–
Tc	Bolt (knuckle arm and tie rod arm mounting)	191 ± 15 {140 ± 11, 19.5 ± 1.5}	–
	Bolt (kingpin cover mounting)		
Td	Lock nut (knuckle stopper bolt tightening)	96 ± 12 {71 ± 9, 9.75 ± 1.25}	–

Lubricant and/or sealant

Mark	Points of application	Specified lubricant and/or sealant	Quantity
a	Chamfered side of inside surface of spacer in knuckle spindle	Wheel bearing grease [NLGI No. 2 (Li soap)]	As required
	Pack space between rollers of needle bearing		
	Pack space between rollers of trunnion bearing inner race		
	Lip area of dust seal		
	Lip area of oil seal		
	Periphery of trunnion bearing mounting area of axle housing ball yoke and outside surface of ball		
	Pack inside of steering knuckle		365 ± 35 g {12.87 ± 1.23 oz.}
	Pack inside of Birfield joint of drive shaft		120 ± 10 g {4.23 ± 0.35 oz.}
b	Steering knuckle mounting surface of knuckle spindle	ThreeBond 1104J or 1215	As required
	Thread area of bolt mounting knuckle arm and tie rod arm		
	Steering knuckle mounting surface of knuckle arm		
	Steering knuckle mounting surface of tie rod arm		
	Steering knuckle mounting surface of kingpin cover		
	Steering knuckle mounting surface of dust boot		

Special tools (Unit: mm {in.})

Mark	Tool name and shape	Part No.	Application
a	Oil seal installer A: ϕ55 {2.17} B: ϕ34 {1.34} 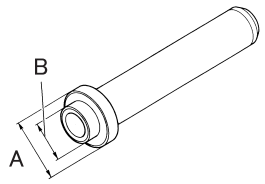 51042	MB999152	Installation of oil seal

◆Inspection procedure◆

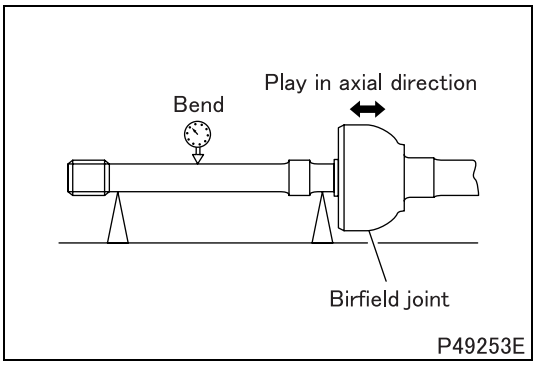

P49253E

■ **Inspection: Drive shaft**

- Carry out the following inspections. If any abnormality is found, replace the drive shaft.

(1) Bend of drive shaft

- Measure the bend at the center of the inner shaft of the drive shaft.

NOTE

- **Give the drive shaft one complete turn and read the dial gauge at this time. The bend is one half of the reading.**

(2) Play in Birfield joint axial direction

◆Installation procedure◆

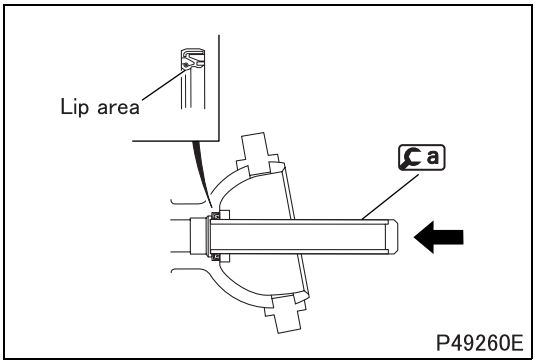

P49260E

■ **Installation: Oil seal**

- Apply grease to the lip area of the oil seal and install it on the axle housing in the illustrated direction.

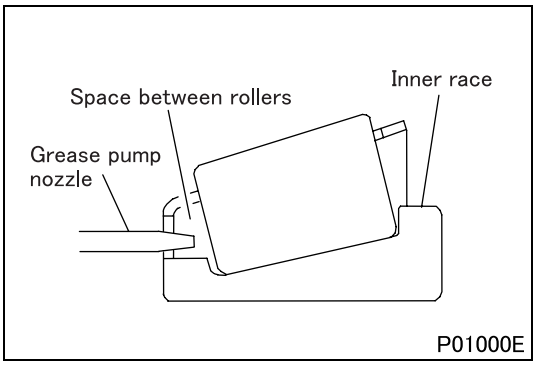

P01000E

■ **Installation: Packing grease in trunnion bearing inner race**

- Insert the grease pump nozzle into the space between rollers of the trunnion bearing inner race to pack grease sufficiently.

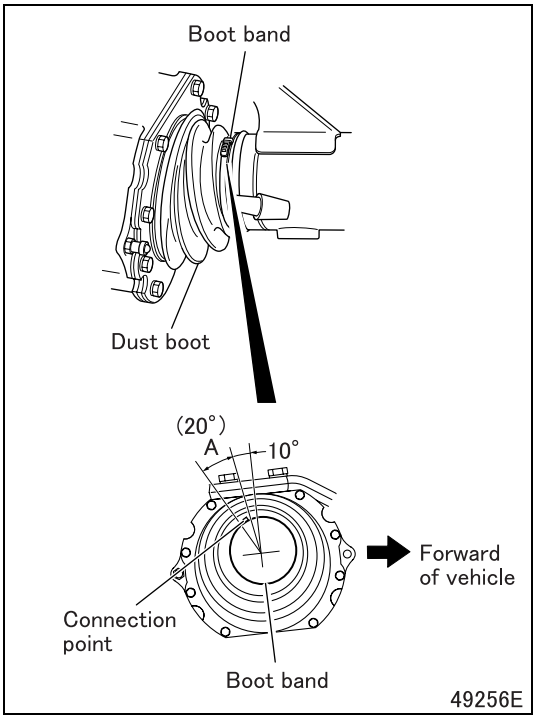

■ **Installation: Boot band**

- Install the boot band within illustrated range A.

CAUTION ⚠

- **When installing the boot band, do not tighten the dust boot excessively so as not to allow the dust boot to stick out of the mating surface remarkably.**

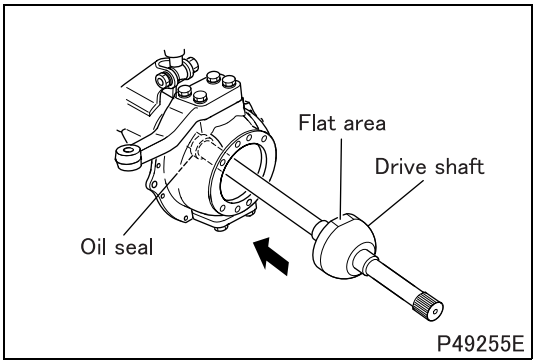

■ **Installation: Drive shaft**

- Install the drive shaft with the flat area of the Birfield joint of the drive shaft placed in a vertical direction.
- Slowly install the drive shaft to avoid damage to the oil seal.

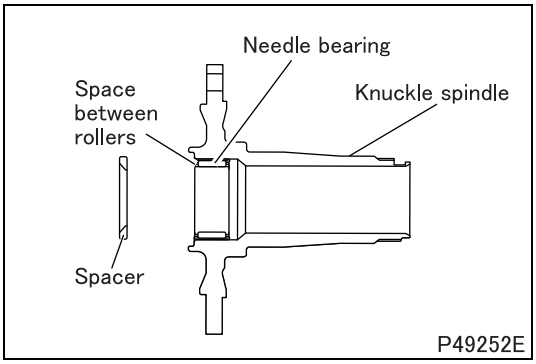

■ **Installation: Spacer and needle bearing**

- Pack grease sufficiently in the space between rollers of the needle bearing, and install the needle bearing so that it is flush with the end face of the knuckle spindle.

CAUTION ⚠

- **Do not drive in the needle bearing excessively.**

- Install the spacer on the knuckle spindle in the illustrated direction.

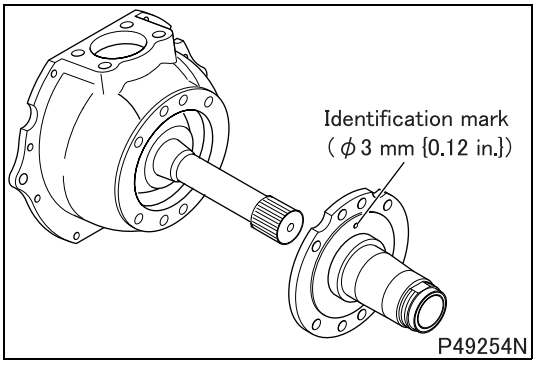

■ **Installation: Knuckle spindle**

- Install the knuckle spindle on the steering knuckle in the illustrated direction.

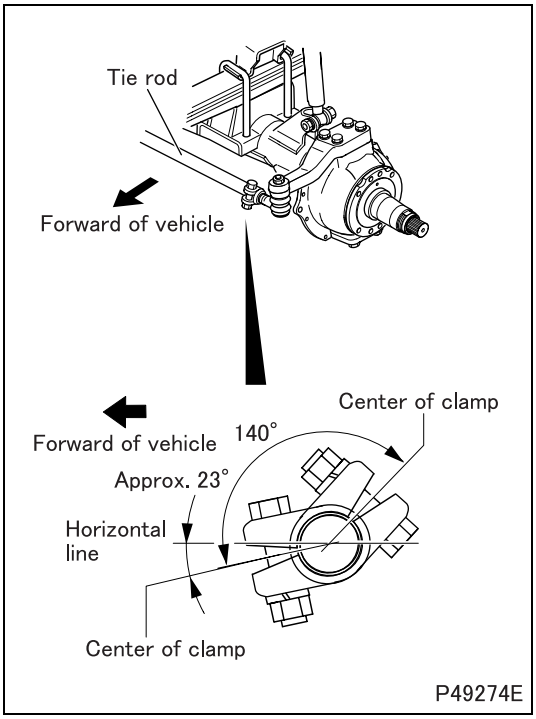

■ **Installation: Tie rod**

- When installing the tie rod, make sure that the center of the tie rod clamp is within the illustrated range.
- If it is out of the illustrated range, change the center position by loosening the clamp.

◆Inspection after installation◆

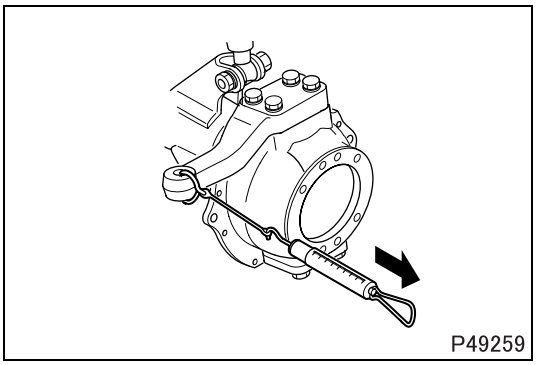

■ **Inspection: Starting torque of steering knuckle**

[Inspection]

- Measure the tangential force at the tie rod arm and knuckle arm end on the tie rod side using a spring balancer.

CAUTION ⚠

- **Do not assemble the dust boot and dust seal when measuring.**

- If the tangential force is within the specified value, the starting torque conforms to the standard value.
  If the measured value deviates from the specified value, adjust.
- Perform measurement again after adjustment. If any fault is found, replace the trunnion bearing.

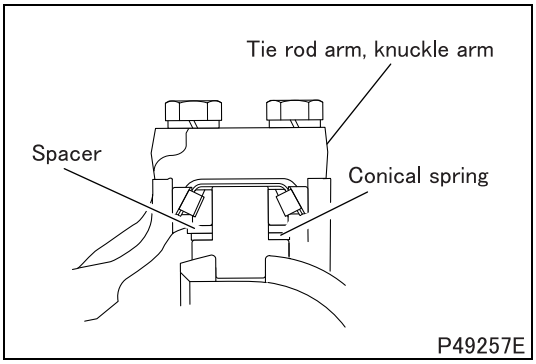

[Adjustment]

- Insert the conical spring and spacer (t = 3.2 mm {0.13 in.}) as illustrated and assemble the tie rod arm and knuckle arm as illustrated. Then, temporarily tighten them with bolts.

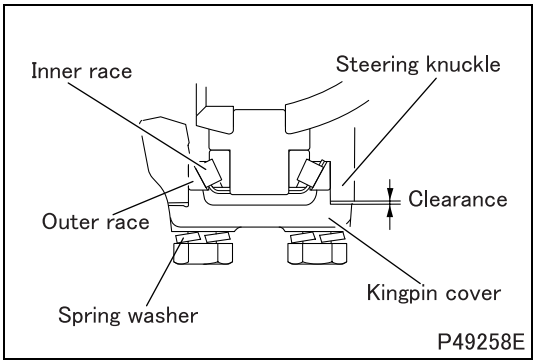

- Install the kingpin cover on the steering knuckle and tighten bolts to such extent that no tension is applied to the spring washers.
- Lift up the kingpin cover by hand until it securely contacts the trunnion bearing outer race and trunnion bearing inner race.
- Measure clearance between the steering knuckle and kingpin cover and select a spacer.
  When clearance is 0.6 mm {0.024 in.} or more: Spacer of 3.2 mm {0.13 in.}
  When clearance is less than 0.6 mm {0.024 in.}: Spacer of 3.6 mm {0.14 in.}
- Install the selected spacer and tighten bolts to the specified torque.

TIE ROD

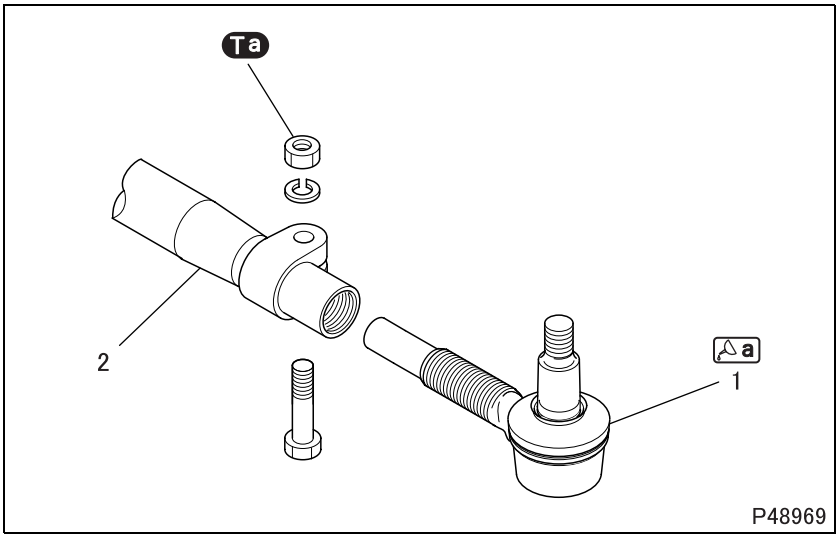

● **Disassembly sequence**

1 Tie rod end
2 Tie rod

CAUTION ⚠

- **If any abnormality such as tear is found in the dust boot of the tie rod end, replace the tie rod end.**

NOTE

- **Do not disassemble the tie rod end, as it is of non-disassembly type.**

● **Assembly sequence**

Follow the disassembly sequence in reverse.

Service standards (Unit: mm {in.})

Location	Maintenance item		Standard value	Limit	Remedy
1	Ball joint of tie rod end	Play (± 980 N {220 lbs, ± 100 kgf} loaded)	0 to 0.15 {0 to 0.0059}	–	Replace
		Rotation torque	1.0 to 5.9 N·m {0.7 to 4.4 ft.lbs, 0.1 to 0.6 kgf·m}	–	
2	Bend of tie rod		–	1 or less	Correct or replace

Tightening torque (Unit: N·m {ft.lbs, kgf·m})

Mark	Parts to be tightened	Tightening torque	Remarks
Ta	Nut (tie rod end tightening)	20 to 29 {15 to 21, 2 to 3}	–

Lubricant and/or sealant

Mark	Points of application	Specified lubricant and/or sealant	Quantity
a	Lip area of dust cover of tie rod end	Wheel bearing grease [NLGI No. 2 (Li soap)]	As required

◆Inspection procedure◆

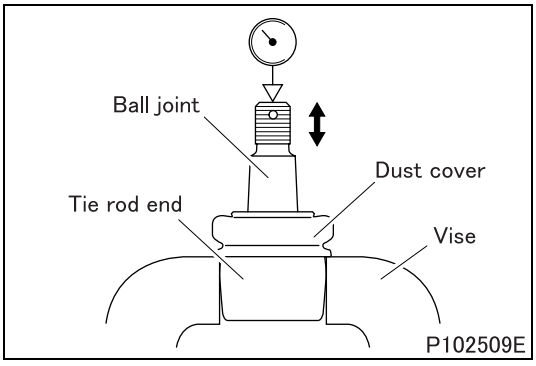

■ **Inspection: Tie rod end**

(1) Play

- Fix the tie rod end with a vise.

CAUTION ⚠

- **Take care not to deform or damage the dust cover when fixing it with a vise.**

- The position of the ball joint with applying no load is adjusted to standard position.
- Measure each play of the ball joint with applying the specified push and pull load from the standard position.

- Total each play and if the total deviates from standard value, replace the tie rod end.

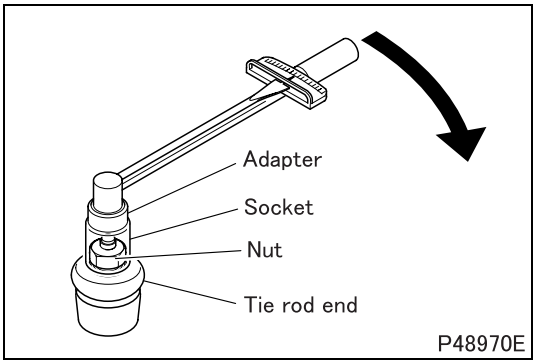

(2) Rotation torque

- Install the tie rod mounting nut on the tie rod end.
- Install the socket, adapter and torque wrench to measure the rotation torque.
- If the measured value deviates from the standard value, replace the tie rod end.

(3) Dust cover

- Check the dust cover for wear, cracks and other damage. These abnormalities may cause water infiltration to the ball joint and wear out it at early stage.
- If any abnormality is found in the dust cover, replace the tie rod end.

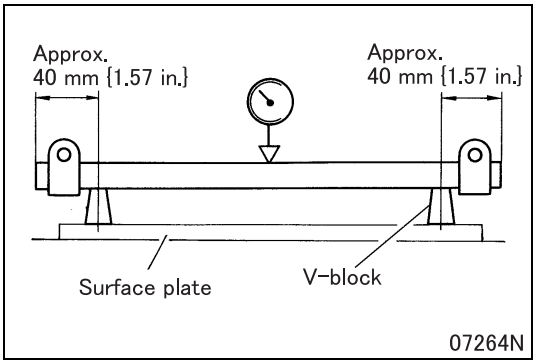

■ Inspection: Bend of tie rod

- Measure the bend of the tie rod at its center.

NOTE

- **Give the tie rod one complete turn and read the dial gauge at this time. The bend is one half of the reading.**

- If the measured value exceeds the standard value, correct or replace the tie rod.

◆Installation procedure◆

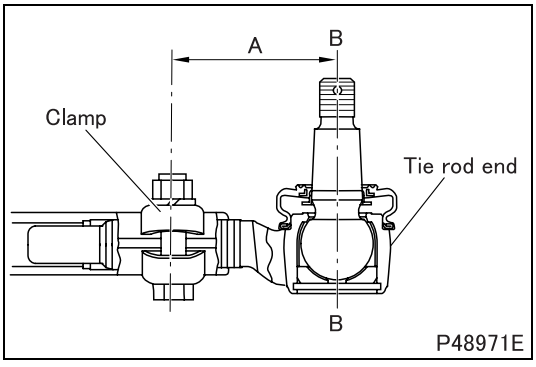

■ Installation: Tie rod end

- Screw in the tie rod end so that difference of dimension A between the tie rod end and the clamp is within 1.5 mm {0.059 in.} between right and left.
  A: Approximately 74 mm {2.91 in.}

CAUTION ⚠

- **Ensure that difference of an amount of screwing in the tie rod end between right and left is within one turn.**
- **Secure the tie rod ends so that illustrated axis B-B on the right is parallel to that on the left.**

AXLE HOUSING

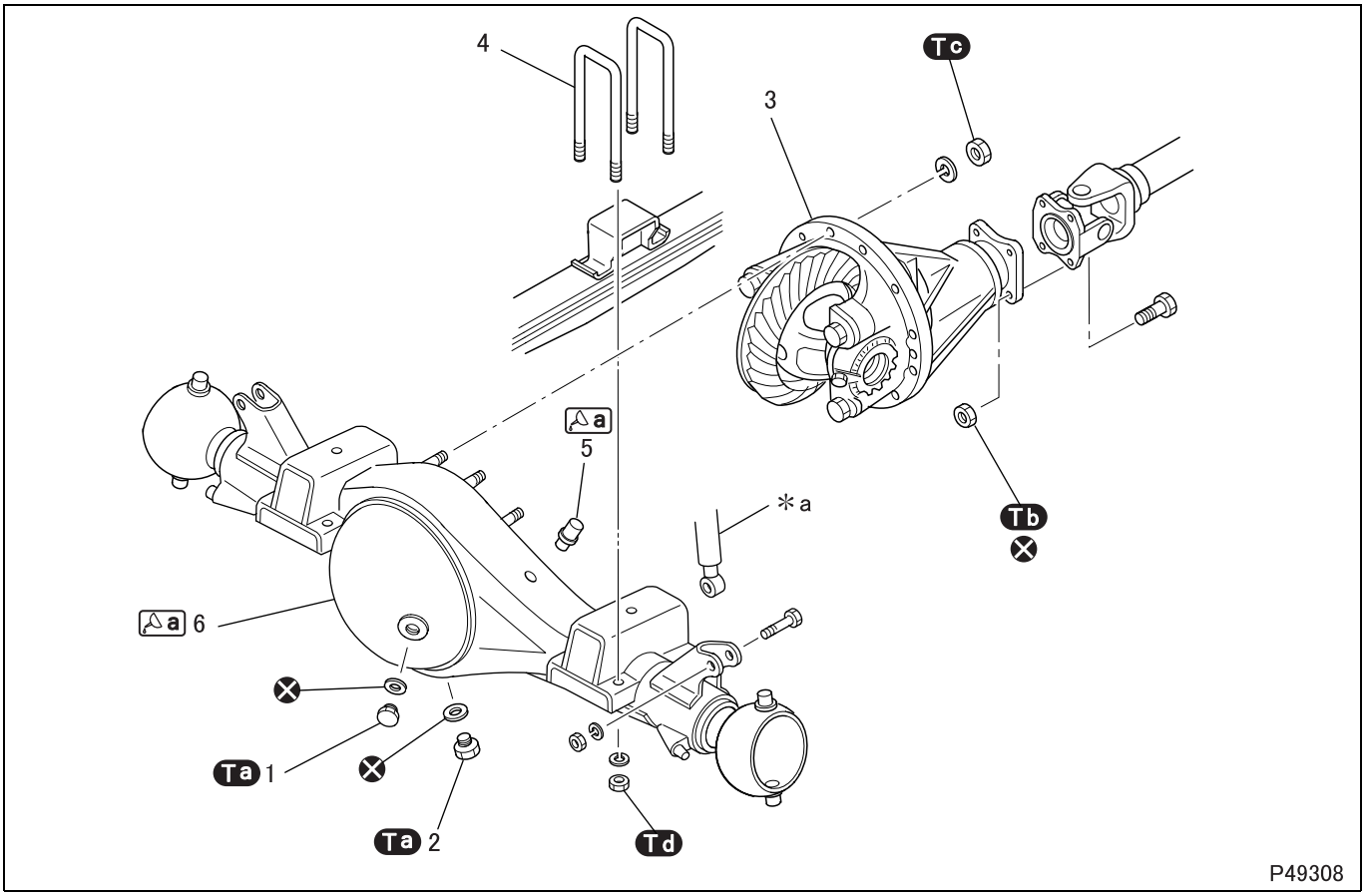

● **Disassembly sequence**

1 Inspection plug
2 Drain plug
3 Reduction and differential (See later section.)
4 U-bolt
5 Vent plug
6 Axle housing

***a**: Shock absorber
⊗: Non-reusable parts

NOTE

- **Do not remove the axle housing unless any abnormality is found.**

● **Assembly sequence**

Follow the disassembly sequence in reverse.

Service standards (Unit: mm {in.})

Location	Maintenance item	Standard value	Limit	Remedy
5	Injection-valve opening pressure of vent plug	4.9 kPa {0.7 psi, 0.05 kfg/cm^2} or less	–	Replace

Tightening torque (Unit: N·m {ft.lbs, kgf·m})

Mark	Parts to be tightened	Tightening torque	Remarks
Ta	Inspection plug	110 ± 10 {81 ± 7.4, 11 ± 1}	–
	Drain plug		
Tb	Nut (propeller shaft mounting)	60 to 75 {44 to 55, 6 to 7.5}	–
Tc	Nut (reduction and differential mounting)	41 ± 6 {30 ± 4.4, 4.15 ± 0.65}	–
Td	Nut (U-bolt mounting)	106 ± 8 {78 ± 5.9, 10.8 ± 0.8}	–

Lubricant and/or sealant

Mark	Points of application	Specified lubricant and/or sealant	Quantity
a	Axle housing mounting surface of vent plug	ThreeBond 1215	As required
	Reduction and differential mounting surface of axle housing		

Special tools (Unit: mm {in.})

Mark	Tool name and shape	Part No.	Application
a	Differential carrier base A: ϕ28 {1.1} 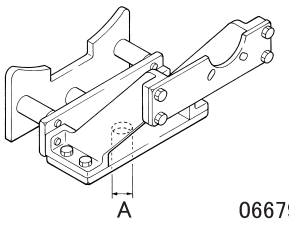	MB999102	Removal and installation of reduction and differential assembly

◆Work before removal◆

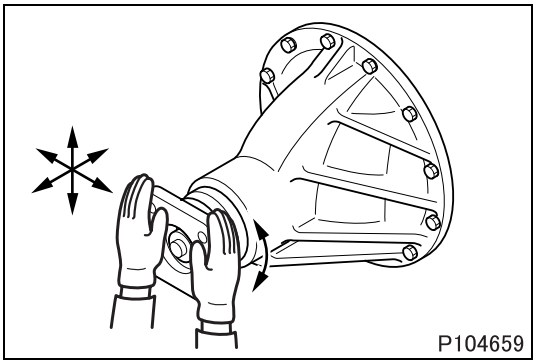

■ Inspection: Play at companion flange

- Move the companion flange in the back-and-forth, up-and-down, right-and-left and rotation direction to check for play.
- If there is play in either of directions, replace the following all parts.
  - Front bearing and rear bearing
  - Pinion spacer
  - Reduction gear set (reduction pinion and reduction gear)
  - Companion flange

◆Removal procedure◆

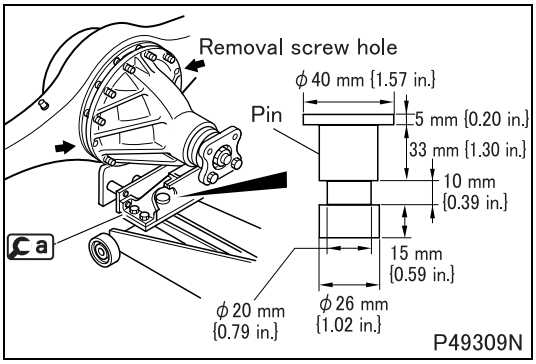

■ Removal: Reduction and differential

- Remove the saucer of the garage jack and place a on it. Fabricate the pin as illustrated, insert and fix it with bolts that have fixed the saucer.
- Screw two M10 × 1.25 mm bolts evenly into the reduction and differential removal screw holes (as shown in illustration) to remove the reduction and differential.

◆Installation procedure◆

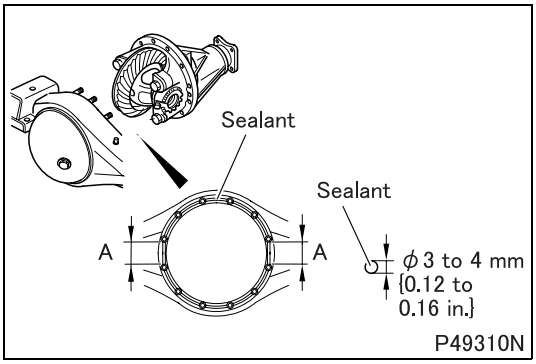

■ Installation: Reduction and differential

- Clean a seal surface of each part.
- Apply sealant to the reduction and differential mounting surface of the axle housing evenly and without breaks. Apply sealant in a straight line direction for illustrated position A.

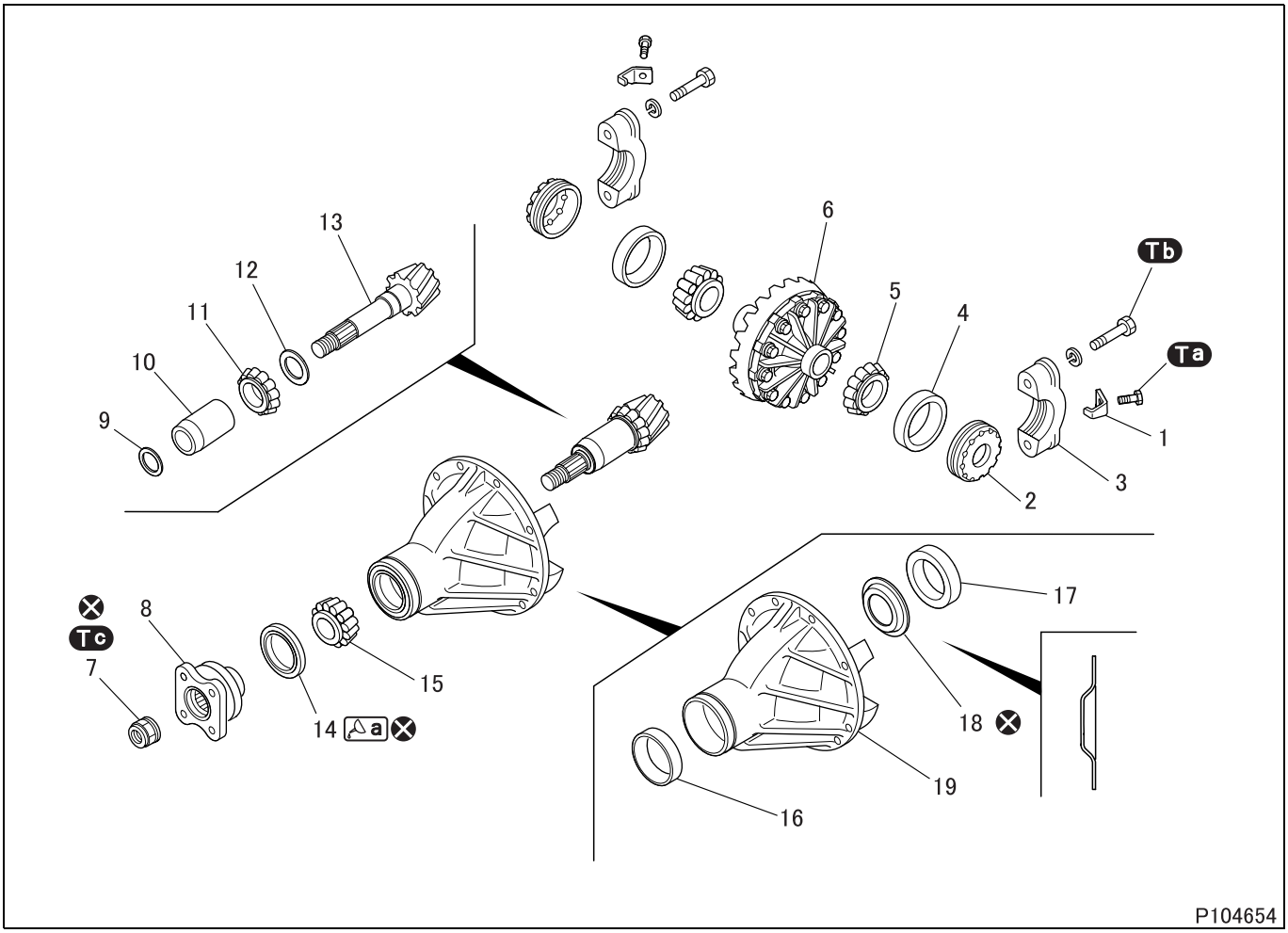

● **Disassembly sequence**

1 Lock plate
2 Side bearing nut
3 Bearing cap
4 Side bearing outer race
5 Side bearing inner race
6 Differential (See later section.)
7 Lock nut
8 Companion flange
9 Front bearing shim
10 Pinion spacer
11 Rear bearing inner race
12 Rear bearing shim
13 Reduction pinion
14 Oil seal
15 Front bearing inner race
16 Front bearing outer race
17 Rear bearing outer race
18 Oil stopper
19 Differential carrier

⊗: Non-reusable parts

CAUTION ⚠

- **Keep side bearings that have been removed separated from each other and ensure that during installation each one is correctly placed.**
- **Be sure to replace the bearing cap, differential carrier and bolts as a differential carrier set.**
- **Be sure to replace the reduction pinion and the reduction gear of the differential as a reduction gear set.**

NOTE

- **Record the number, thickness and height of front bearing shims, pinion spacers and rear bearing shims to use them as reference at assembly.**

● **Assembly sequence**

Follow the disassembly sequence in reverse.

Service standards (Unit: mm {in.})

Location	Maintenance item	Standard value	Limit	Remedy
–	Starting torque of pinion bearing (with no oil seal installed)	0.69 to 1.27 N·m {0.5 to 0.94 ft.lbs, 0.07 to 0.13 kgf·m}	–	Adjust or replace
6	Wobble at back face of reduction gear	0.1 {0.0039} or less	–	Replace
6, 13	Backlash between reduction gear and reduction pinion	0.15 to 0.20 {0.0059 to 0.0079}	–	Adjust or replace

Tightening torque (Unit: N·m {ft.lbs, kgf·m})

Mark	Parts to be tightened	Tightening torque	Remarks
Ta	Bolt (lock plate mounting)	19.6 to 26.5 {14.5 to 19.5, 2.0 to 2.7}	–
Tb	Bolt (bearing cap mounting)	68.6 to 78.4 {50.6 to 57.8, 7 to 8}	–
Tc	Lock nut (companion flange mounting)	313.6 to 411.6 {231 to 304, 32 to 42}	–

Lubricant and/or sealant

Mark	Points of application	Specified lubricant and/or sealant	Quantity
a	Lip area of oil seal	Wheel bearing grease [NLGI No. 2 (Li soap)]	As required

Special tools (Unit: mm {in.})

<table>
<tr><th>Mark</th><th>Tool name and shape</th><th>Part No.</th><th>Application</th></tr>
<tr><td>a</td><td>Differential working base assembly
 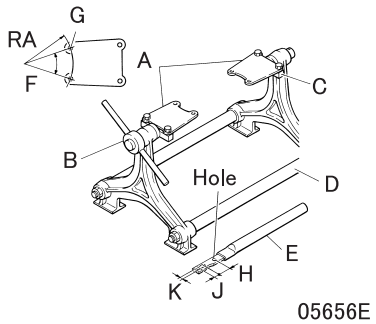

05656E
<table>
<tr><th colspan="4">Component</th><th>Part No.</th></tr>
<tr><td rowspan="2">A</td><td colspan="3">Attachment</td><td>–</td></tr>
<tr><td>RA</td><td>F</td><td>G</td><td>–</td></tr>
<tr><td></td><td>R134.5
{5.30}</td><td>30°</td><td>ϕ13
{0.51}</td><td>MB999074</td></tr>
<tr><td>B</td><td colspan="3">Holder</td><td>MB999036</td></tr>
<tr><td>C</td><td colspan="3">Holder</td><td>MB999037</td></tr>
<tr><td>D</td><td colspan="3">Working base</td><td>MB999035</td></tr>
<tr><td>E</td><td colspan="3">Flange stopper</td><td>MB999096</td></tr>
</table>
<table>
<tr><th>H</th><th>J</th><th>K</th></tr>
<tr><td>40
{1.57}</td><td>20
{0.79}</td><td>11
{0.43}</td></tr>
</table></td><td>MB999117</td><td>Workbench for reduction and differential

Flange stopper to be used for removal and installation of companion flange</td></tr>
<tr><td>b</td><td>Preload socket
 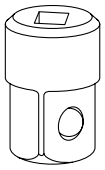
P48876</td><td>MB990326</td><td>Measurement of starting torque of pinion bearing</td></tr>
<tr><td>c</td><td>Differential side bearing adjust tool
<table>
<tr><th>A</th></tr>
<tr><td>ϕ83.5
{3.29}</td></tr>
</table>
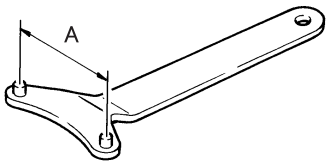

05657</td><td>MB999012</td><td>Removal and installation of side bearing nut</td></tr>
<tr><td>d</td><td>Adapter
<table>
<tr><th>A</th><th>B</th></tr>
<tr><td>ϕ44
{1.73}</td><td>ϕ53
{2.1}</td></tr>
</table>
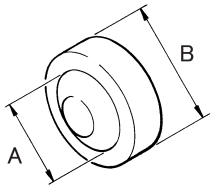

05658</td><td>MB999077</td><td>Removal of side bearing inner race (to be used in combination with commercial bearing puller)</td></tr>
<tr><td>e</td><td>Bearing installer
<table>
<tr><th>A</th><th>B</th></tr>
<tr><td>ϕ46
{1.81}</td><td>ϕ56
{2.20}</td></tr>
</table>
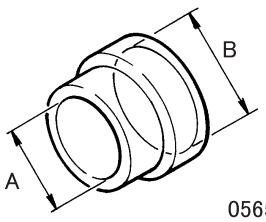

05659</td><td>MB999079</td><td>Installation of side bearing inner race</td></tr>
</table>

Mark	Tool name and shape	Part No.	Application
f	Pinion rear bearing remover A: 0.5 {0.020}, B: 25.5 {1.0} 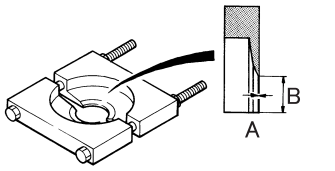 02956	MB999045	Removal of rear bearing inner race
g	Bearing installer A: ϕ52 {2.05}, B: ϕ42 {1.65} 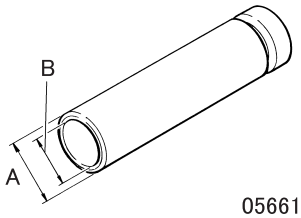 05661	MB990104	Installation of rear bearing inner race (to be used in combination with h) Installation of oil seal (to be used in combination with j) Installation of front bearing inner race
h	Bearing installer A: ϕ57 {2.24}, B: ϕ46 {1.81} 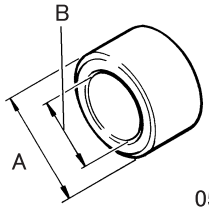 05662	MB999044	Installation of rear bearing inner race (to be used in combination with g)
i	Reduction pinion setting gauge set 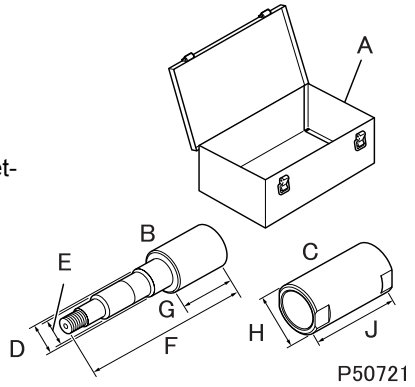 P50721 Component / Part No.: A: Tool box — MB990824 B: Pinion gauge — – B: D ϕ39.9 {1.57}, E ϕ34.8 {1.37}, F 254.5 {10.02}, G 73 {2.87} — MB999086 C: Cylinder gauge — – C: H ϕ100 {3.94}, J 184 {7.24} — MB999087	MB999084	Selection of rear bearing shim (pinion height adjustment)
j	Bearing installer adapter A: ϕ88 {3.46}, B: ϕ50 {1.97} 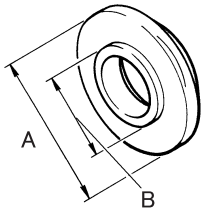 05667	MB999015	Installation of oil seal (to be used in combination with g)

Mark	Tool name and shape	Part No.	Application
ⓚ	Bearing installer A: ϕ70 {2.76} B: ϕ57 {2.24} 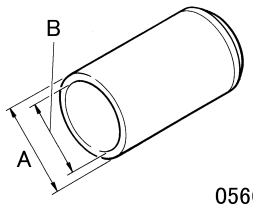 05668	MB999100	Installation of front bearing outer race and rear bearing outer race (to be used in combination)
ⓛ	Bearing installer A: ϕ89 {3.50} B: ϕ79 {3.11} 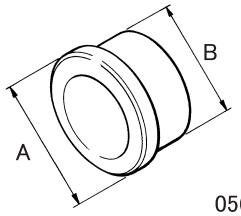 05669	MB999089	

◆Work before removal◆

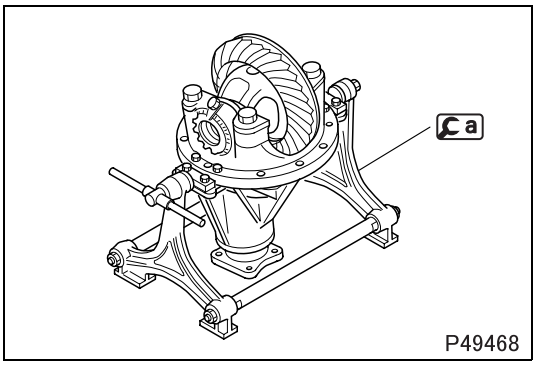

P49468

■ **Preparatory work: Installation of differential working base assembly**

- Install the reduction and differential on ⓐ.

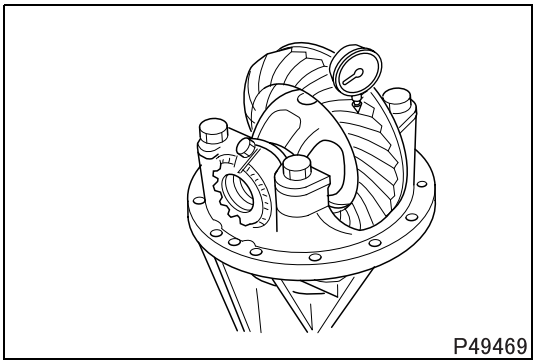
P49469

■ **Inspection: Backlash between reduction gear and reduction pinion**

- If backlash is found faulty, the tightening amount of the side bearing nut is probably inappropriate.

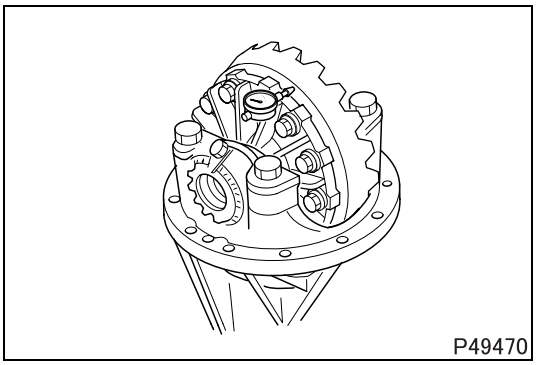
P49470

■ **Inspection: Wobble at back face of reduction gear**

- Measure wobble at the illustrated position of the reduction gear.

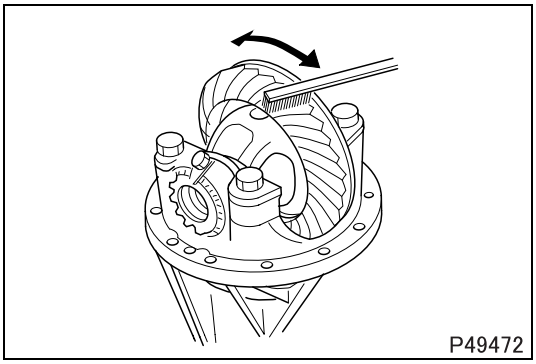
P49472

■ **Inspection: Tooth contact of reduction gear**

- Apply red lead to three to four teeth at three equally spaced points of the reduction gear.
- Turn the reduction gear several times to check for tooth contact.

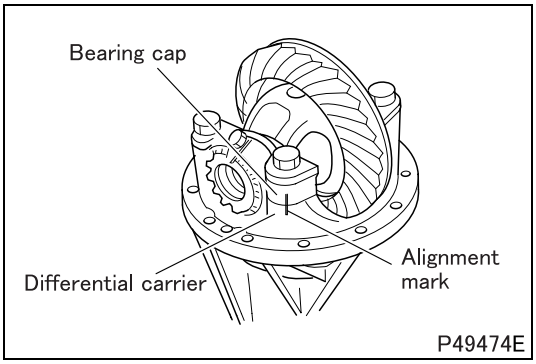

P49474E

■ **Alignment marks: Bearing cap and differential carrier**

- Put alignment marks on the bearing cap and differential carrier for correct identification of right and left parts.

◆Removal procedure◆

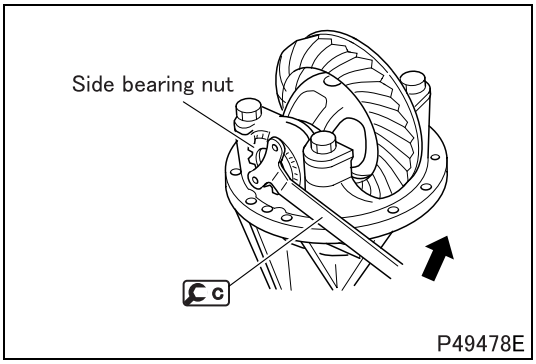

P49478E

■ **Removal: Side bearing nut**

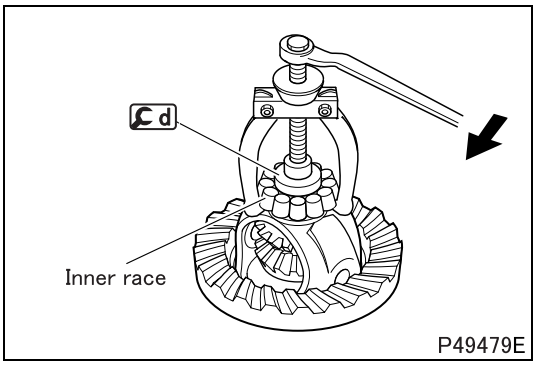

P49479E

■ **Removal: Side bearing inner race**

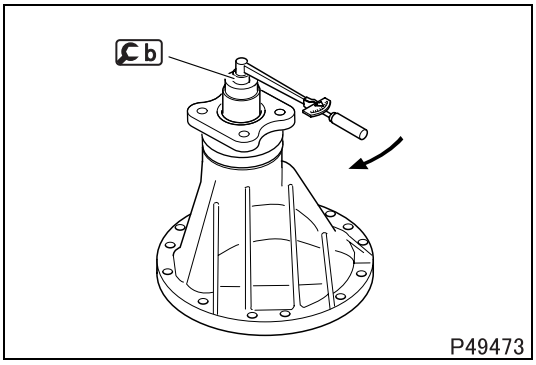

P49473

■ **Inspection: Starting torque of pinion bearing**

- After removing the differential, measure the starting torque of the pinion bearing.

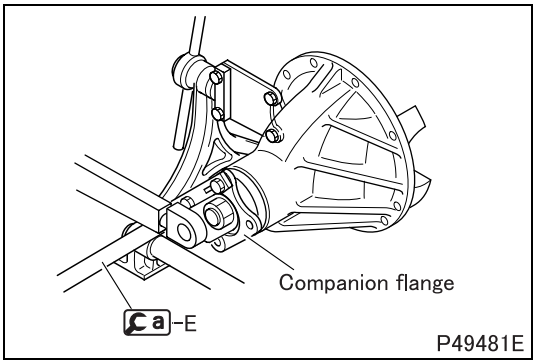

■ **Removal: Companion flange**

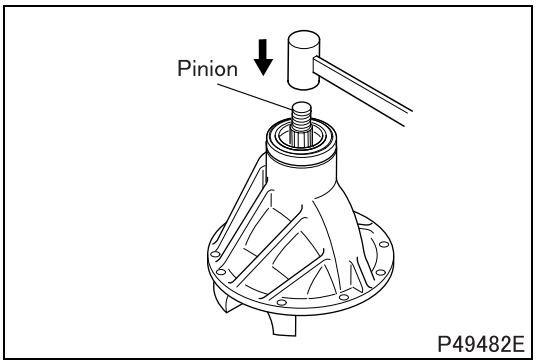

■ **Removal: Reduction pinion**

- Tap the reduction pinion with a plastic hammer and hold the reduction pinion with your hand to prevent it from falling.

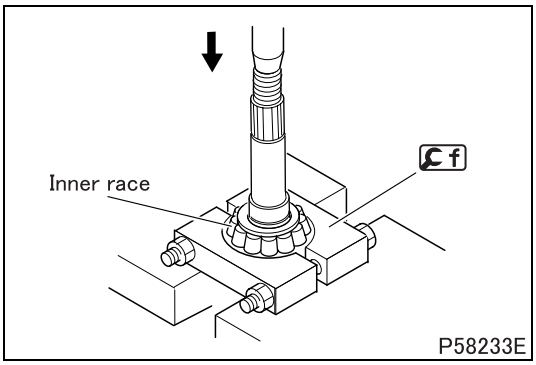

■ **Removal: Rear bearing inner race**

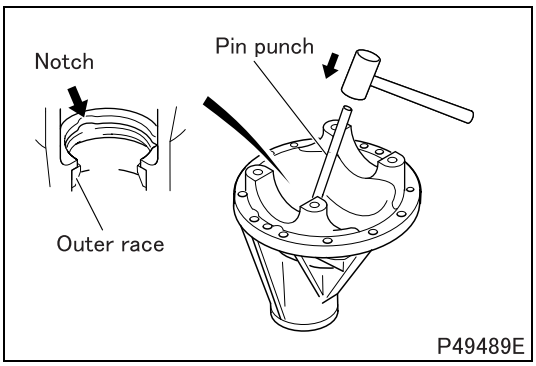

■ **Removal: Front bearing outer race**

- Drive out the front bearing outer race by tapping evenly at three indented parts in the differential carrier.

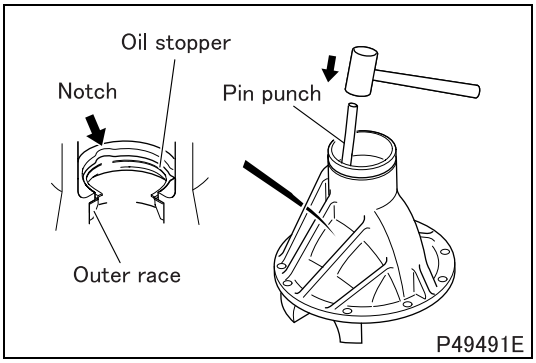

■ **Removal: Rear bearing outer race**

- Drive out the rear bearing outer race, together with the oil stopper, by tapping evenly at three indented parts in the differential carrier.

◆Installation procedure◆

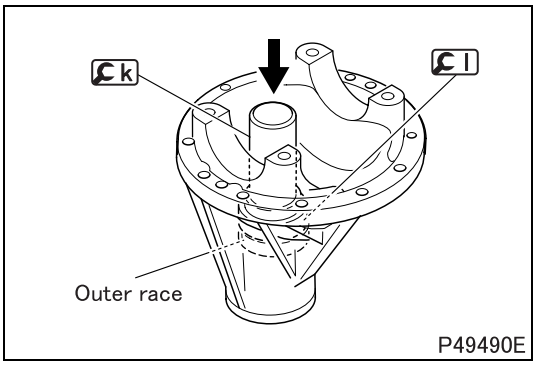

■ **Installation: Rear bearing outer race**

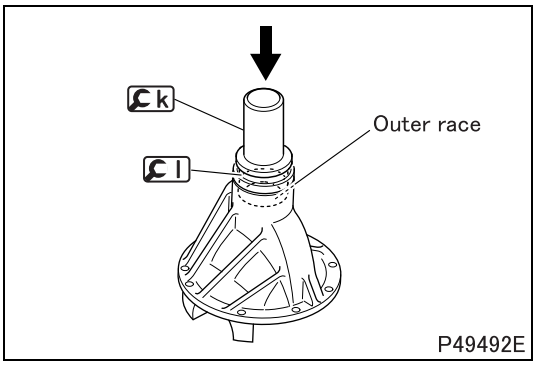

■ **Installation: Front bearing outer race**

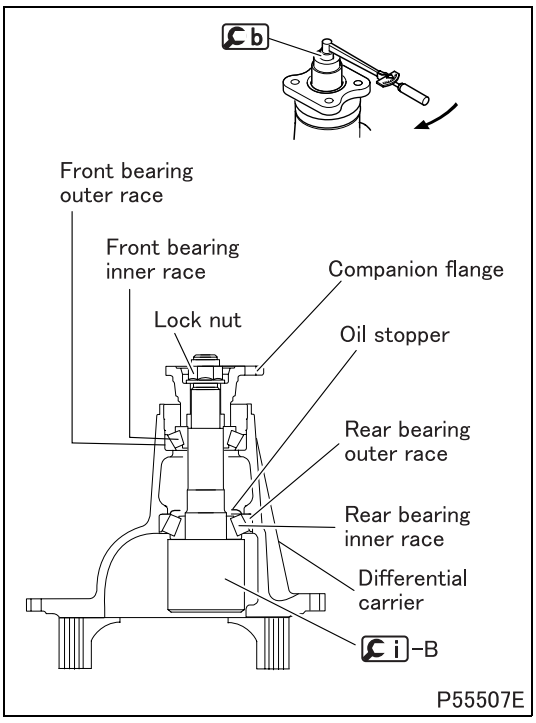

■ **Installation: Rear bearing shim**

[Selection (pinion height adjustment)]

- After installing the front bearing outer race, temporarily assemble i-B together with the illustrated parts into the differential carrier.

CAUTION ⚠

- **Do not assemble parts except the illustrated ones.**

- Tighten the lock nut so that the starting torque of the pinion bearing at i-B conforms to the standard value.

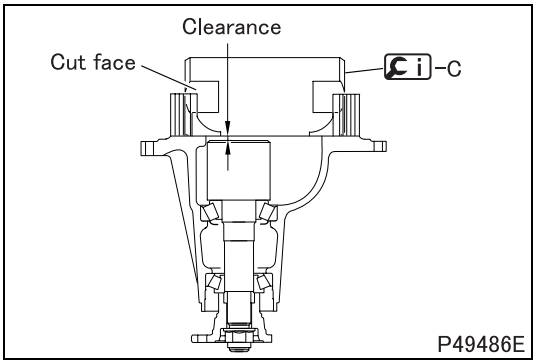

- Set i -C in the illustrated direction and measure clearance as illustrated.
- Select shims so that clearance becomes 1.5 mm {0.059 in.}.
  Thickness of shims available
  0.30 and 1.38 to 1.65 mm {0.012 and 0.054 to 0.065 in.} (10 thickness in 0.03 mm {0.012 in.} increments)

CAUTION ⚠

- **Select the number of rear bearing shims as least as possible.**

[Installation]

- If using a shim of 0.30 mm {0.012 in.} in thickness in combination with a shim of other thickness for installing rear bearing shims, install a shim of 0.30 mm {0.012 in.} in thickness on the rear bearing inner race to prevent wear-out.

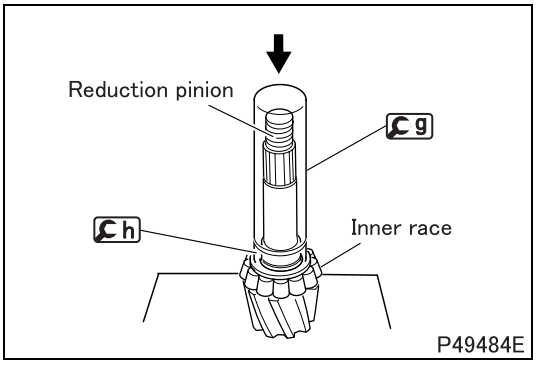

■ Installation: Rear bearing inner race

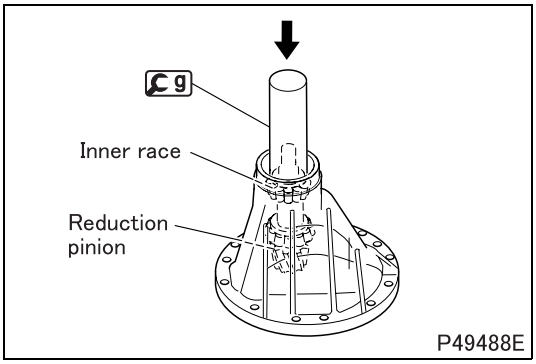

■ Installation: Front bearing inner race

- Install the front bearing inner race with the reduction pinion assembled into the differential carrier.

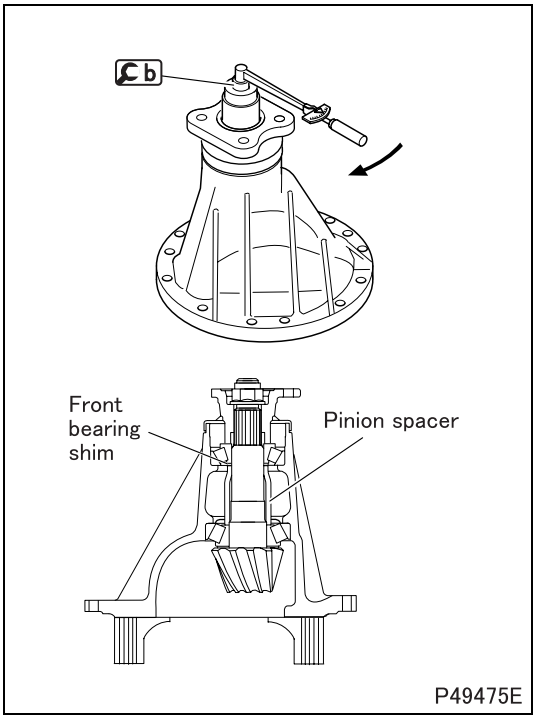

■ **Inspection: Starting torque of pinion bearing**

- After installing front bearing shims, measure the starting torque of the pinion bearing with no oil seal assembled.
- If the measured value deviates from the standard value, adjust by changing a pinion spacer and front bearing shims.
  Thickness of pinion spacers available
  64.07, 64.40 mm {2.52, 2.54 in.} (painted in white)
  Thickness of front bearing shims available
  0.03 and 2.00 to 2.33 mm {0.0012 and 0.079 to 0.092 in.} (12 thickness in 0.03 mm {0.012 in.} increments)

CAUTION ⚠

- **Select a pinion spacer so that the number of front bearing shims becomes as least as possible.**

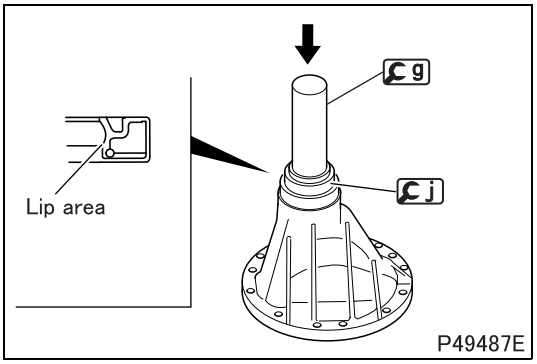

■ **Installation: Oil seal**

- Apply grease to the lip area of the oil seal and install it on the differential carrier in the illustrated direction.

■ **Installation: Companion flange**

- Install the companion flange in the same manner as for removal. (See **"■ Removal: Companion flange"**.)

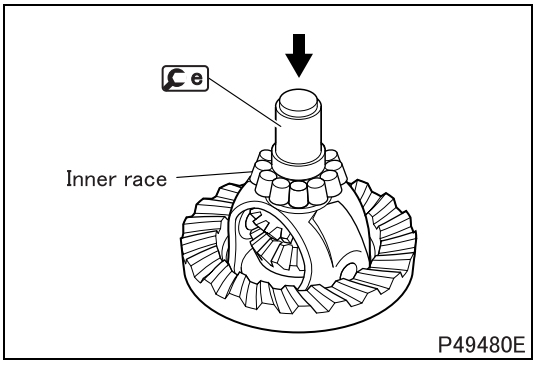

■ **Installation: Side bearing inner race**

■ **Installation: Side bearing nut**

- Install the side bearing nut in the same manner as for removal. (See **"■ Removal: Side bearing nut"**.)

◆Work after installation◆

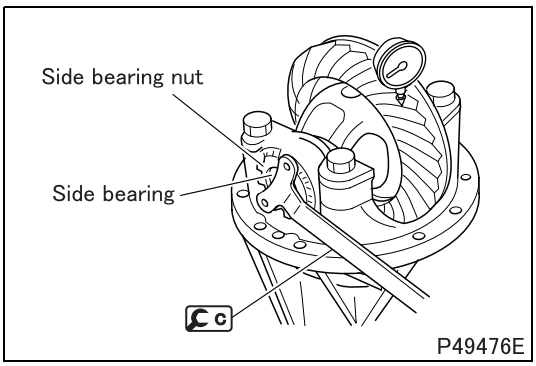

■ Adjustment: Backlash between reduction gear and reduction pinion

- Tighten the side bearing nut for adjustment to such extent that no preload is applied to the side bearing.

CAUTION ⚠

- **When one side bearing nut is loosened, be sure to tighten the other one the same amount to prevent the side bearing preload from changing.**

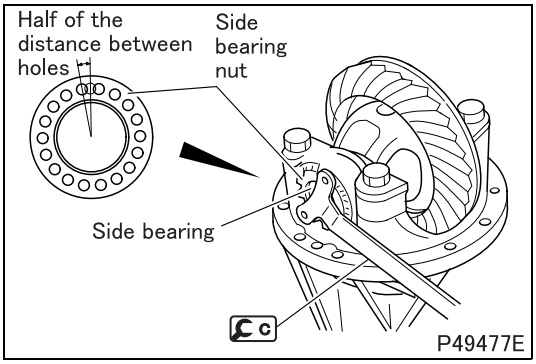

■ Adjustment: Side bearing preload

- After adjusting backlash between the reduction gear and reduction pinion, further tighten both of the side bearing nuts within the range of backlash to provide preload to the side bearing.
- The tightening amount of preload must be limited to the distance between two holes for combination of right and left sides.

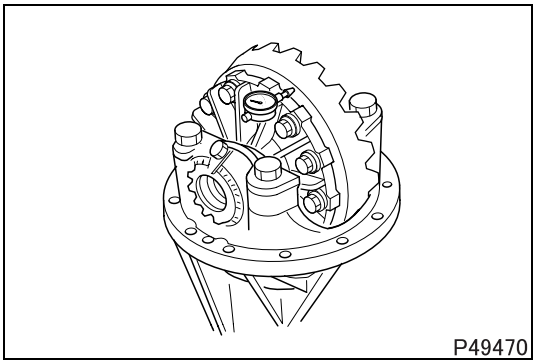

■ Inspection: Wobble at back face of reduction gear

- Measure wobble at the illustrated position of the reduction gear.
- If the measured value deviates from the standard value, replace the reduction gear and reduction pinion of the differential as a set.

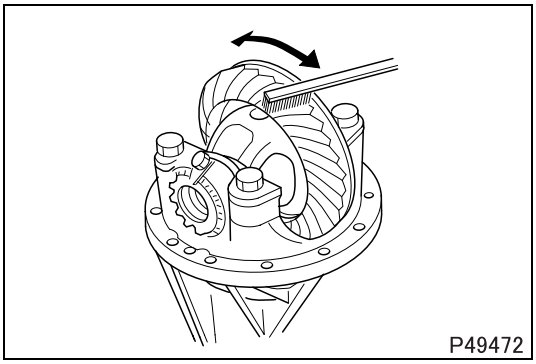

■ Inspection: Tooth contact of reduction gear

[Inspection]

- Apply red lead to three to four teeth at three equally spaced points of the reduction gear.
- Turn the reduction gear several times to check for tooth contact.
- Adjust tooth contact if it is remarkably offset.

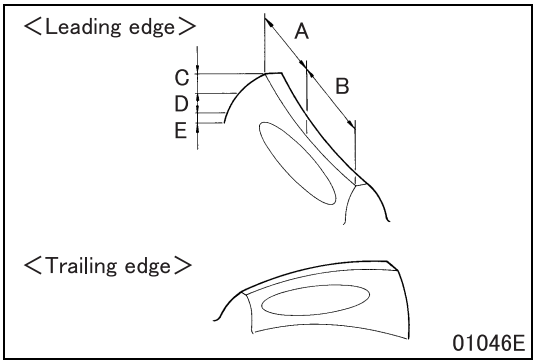

● Correct tooth contact at no load

<Reduction gear>

A: Heel
B: Toe
C: Face
D: Flank
E: Clearance

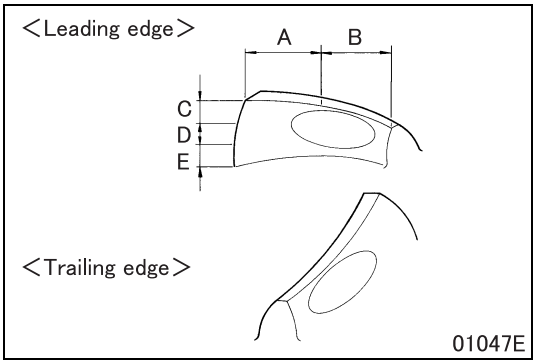

<Reduction pinion>

A: Heel
B: Toe
C: Face
D: Flank
E: Clearance

Maintenance item			Assembly standards
At no load	Tooth contact position	Lengthwise direction of tooth	From center towards toe
		Vertical direction	From center towards top of tooth for reduction gear and center for reduction pinion
	Tooth contact shape	Length	Approximately 50 to 70% of tooth width
		Width	Approximately 50 to 70% of tooth depth
	Degree of tooth contact		It becomes weaker as it nears tooth root and tooth tip

NOTE

- **When tooth contact is near the toe at no load, it becomes middle area contact at load.**

[Adjustment]

- Adjust by backlash between reduction gear and reduction pinion (to be adjusted with the side bearing nut) and addition or reduction of rear bearing shims.

CAUTION ⚠

- **Make sure to replace as a reduction gear set (reduction gear and reduction pinion), when replacing the gear because of excessive teeth wear.**

	Method of adjustment	Moving direction	
Tooth contact by addition or reduction of shims	Advance reduction pinion to reduction gear (shims are added) 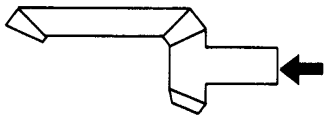 55497	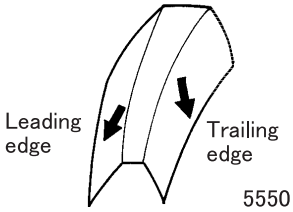 55501E	Tooth contact moves towards tooth root
	Retard reduction pinion from reduction gear (shims are reduced) 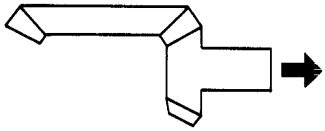 55498	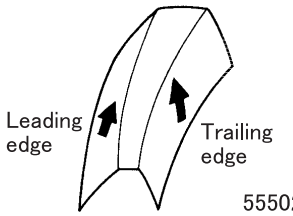 55502E	Tooth contact moves towards tooth tip
Tooth contact by adjustment with side bearing nut	Advance reduction gear to reduction pinion center (less backlash) 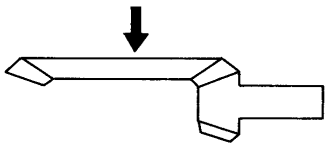 55499	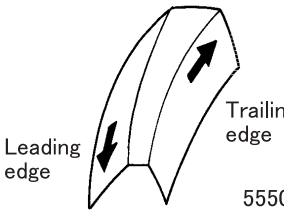 55503E	Tooth contact moves in lengthwise direction of tooth Leading edge: Nearer to toe and slightly nearer to root of tooth Trailing edge: Nearer to heel and slightly nearer to top of tooth
	Retard reduction gear from reduction pinion center (more backlash) 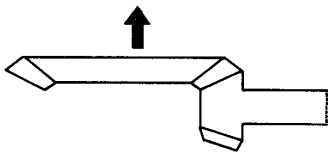 55500	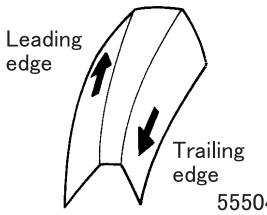 55504E	Tooth contact moves in lengthwise direction of tooth Leading edge: Nearer to heel and slightly nearer to top of tooth Trailing edge: Nearer to toe and slightly nearer to root of tooth

Differential

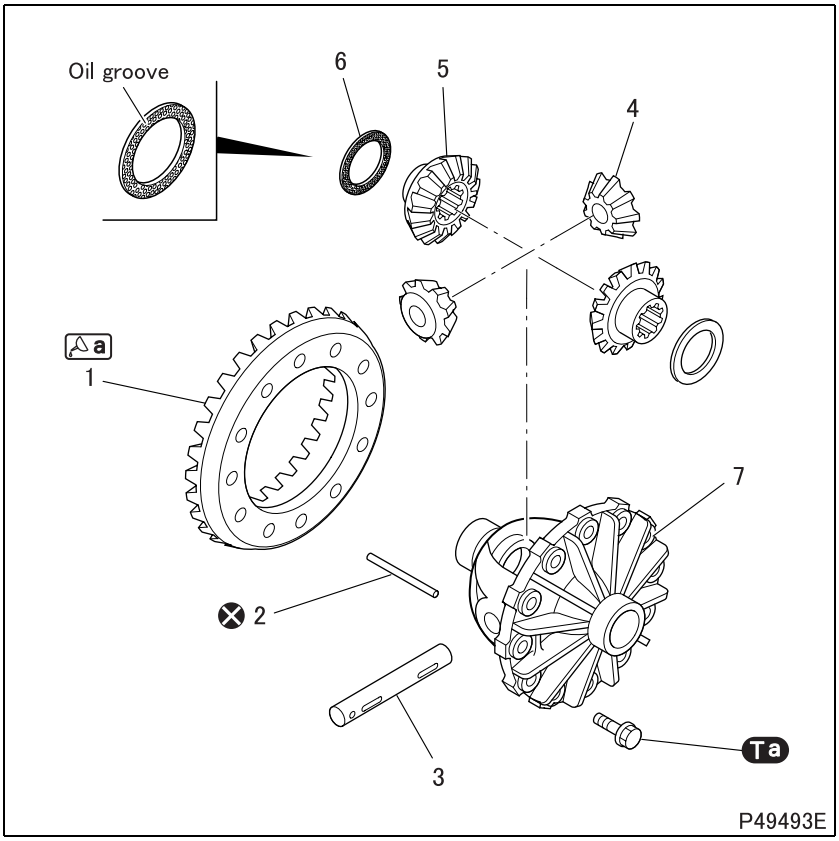

● **Disassembly sequence**

1 Reduction gear
2 Lock pin
3 Pinion shaft
4 Differential pinion
5 Side gear
6 Side gear washer
7 Differential case

⊗: Non-reusable parts

CAUTION ⚠

- **Be sure to replace the differential pinion and the side gear as a side gear set.**

● **Assembly sequence**

Follow the disassembly sequence in reverse.

Service standards (Unit: mm {in.})

Location	Maintenance item	Standard value	Limit	Remedy
4, 5	Backlash between differential pinion and side gear	0.15 to 0.20 {0.0059 to 0.0078}	0.3 {0.012}	Adjust or replace
5	Backlash between side gear and spline of drive shaft	0.07 to 0.16 {0.0028 to 0.0063}	0.5 {0.020}	Replace

Tightening torque (Unit: N·m {ft.lbs, kgf·m})

Mark	Parts to be tightened	Tightening torque	Remarks
Ta	Bolt (reduction gear mounting)	137.2 to 166.6 {101 to 122, 14 to 17}	–

Lubricant and/or sealant

Mark	Points of application	Specified lubricant and/or sealant	Quantity
a	Bolt threads of reduction gear	Loctite 271	As required

◆Work before removal◆

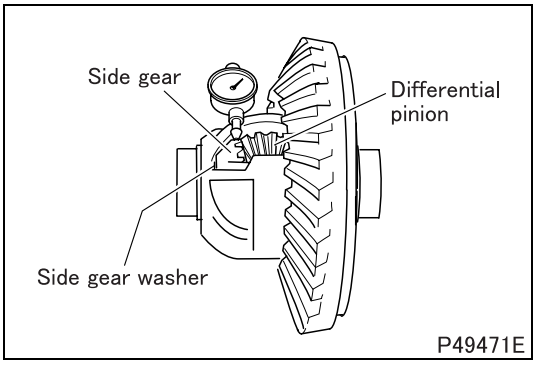

■ **Inspection: Backlash between differential pinion and side gear**

- If backlash is found faulty, thickness of the side gear washer is probably inappropriate.

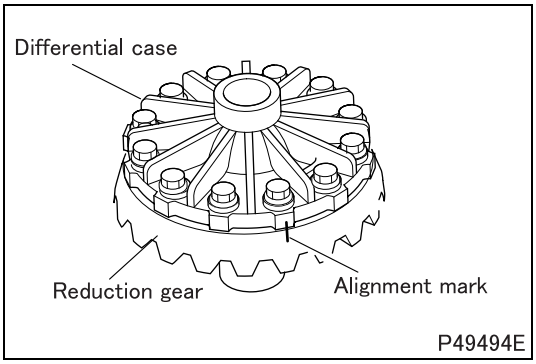

■ **Alignment marks: Reduction gear and differential case**

- Put alignment marks on the reduction gear and the differential case.

◆Inspection procedure◆

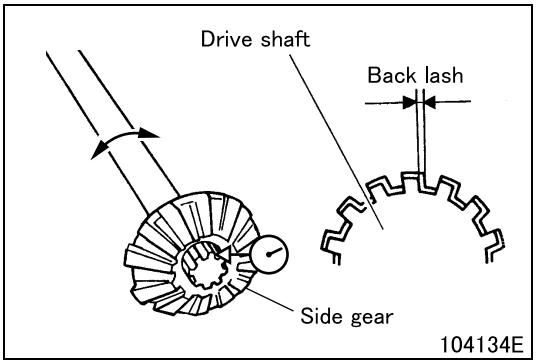

■ **Inspection: Backlash between side gear and spline of drive shaft**

- If the measured value exceeds the limit, replace defective parts.

◆Installation procedure◆

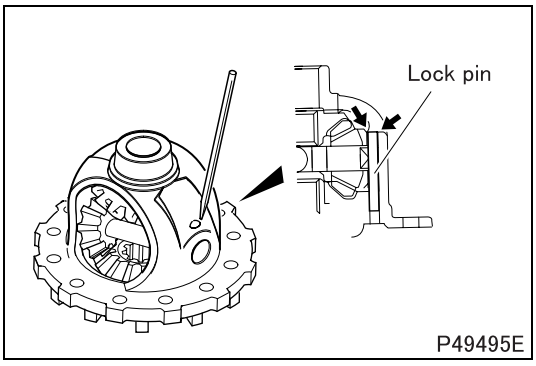

■ **Installation: Lock pin**

- After installing the lock pin, caulk it with a punch (two locations).

◆Inspection after installation◆

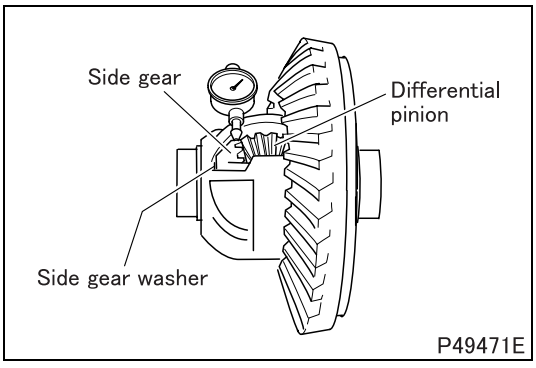

■ **Inspection: Backlash between differential pinion and side gear**

- If the measured value deviates from the standard value, adjust by changing thickness of the side gear washer.
  Thickness of side gear washers available
  1.4, 1.5, 1.6 mm {0.055, 0.059, 0.063 in.} (three thickness)

CAUTION ⚠

- **Use side gear washers of the same thickness for the right and left sides.**

Group 27

Rear Axle

Table of Contents

Back

Home

MITSUBISHI FUSO TRUCK OF AMERICA, Inc.

Pub.No.TWSE0805-27

INDEX

SPECIFICATIONS **27-2**

STRUCTURE AND OPERATION
1. **Wheel Hub and Rotor** **27-3**
2. **Wheel Hub and Brake Drum** **27-4**
3. **Reduction and Differential** **27-5**
4. **Limited Slip Differential** **27-6**

TROUBLESHOOTING **27-8**

ON-VEHICLE INSPECTION AND ADJUSTMENT
1. **Inspection and Replacement of Axle Oil** **27-10**

WHEEL HUB AND ROTOR **27-12**

WHEEL HUB AND BRAKE DRUM **27-22**

AXLE HOUSING **27-34**

REDUCTION AND DIFFERENTIAL **27-38**

SPECIFICATIONS

Item		Specifications	
		Except FE85	FE85
Rear axle	Model	R033T	R035T
	Type	Banjo type, full floating	
Reduction	Model	D033H	D035H
	Type	Single-reduction hypoid gear	
	Gear ratio	4.875 5.285	5.285 5.714
Differential	Tooth shape	Straight bevel gear	
Gear oil	Grade	Normal : Maximum air temperature during operation below 40°C {104°F} API GL-5 SAE 90 Hot area : Maximum air temperature during operation above 40°C {104°F} API GL-5 SAE 140	
	Quantity L {qts}	4.5 {4.8}	
Mass kg {lb}		210 to 230 {460 to 505} (approximately)	250 {550} (approximately)

- Use the gear oil with a SAE viscosity of 140 when a vehicle is used under heavily-loaded, severe conditions such as continuous driving on uphill grades. However, the air temperature must be above 10°C.
- Limited slip differential oil API GL-5 SAE 90 is used for models with LSD (Limited Slip Differential).
- The mass differs between vehicle models.

1. Wheel Hub and Rotor

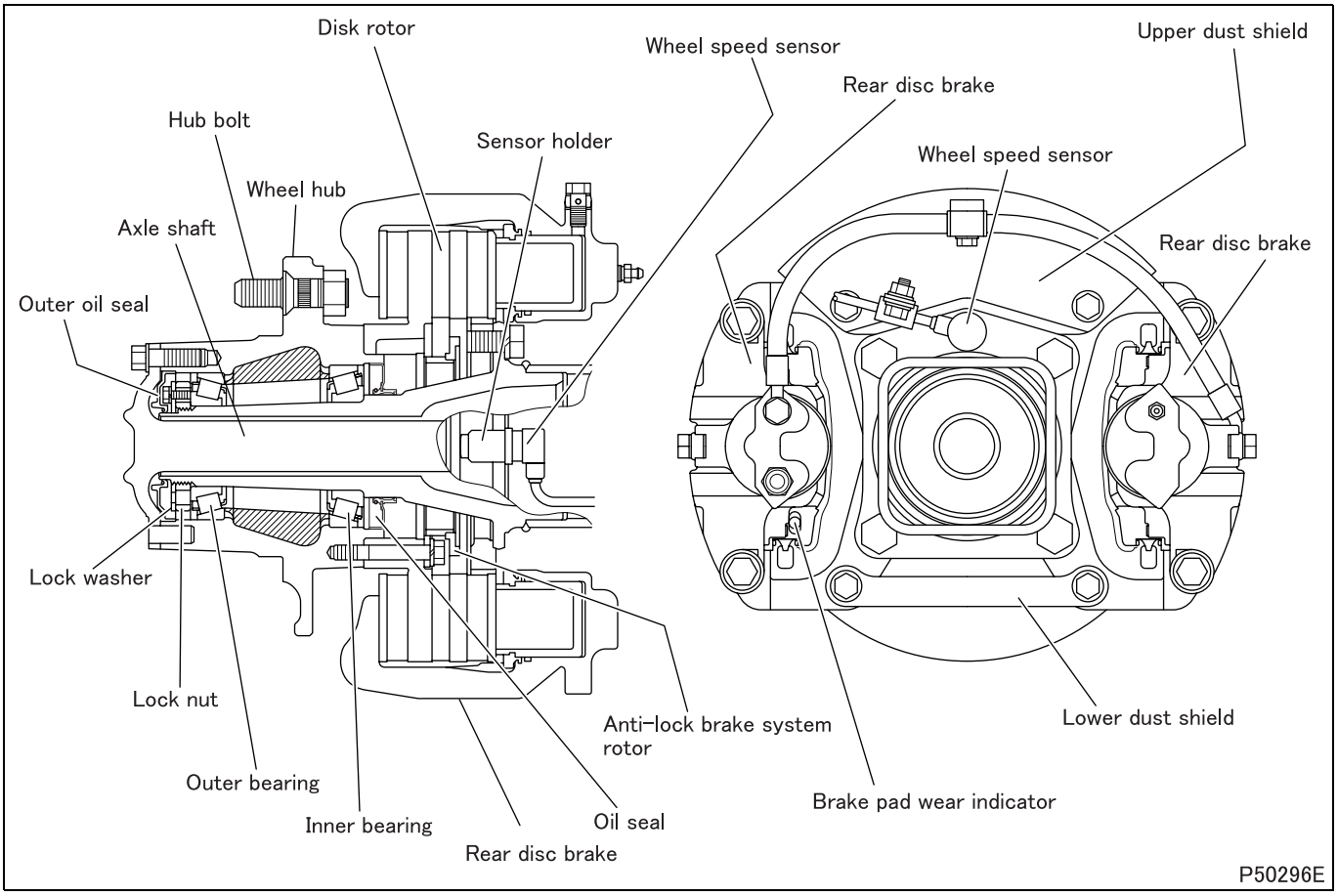

- The brake pad wear indicator is installed only on the right wheels.

2. Wheel Hub and Brake Drum

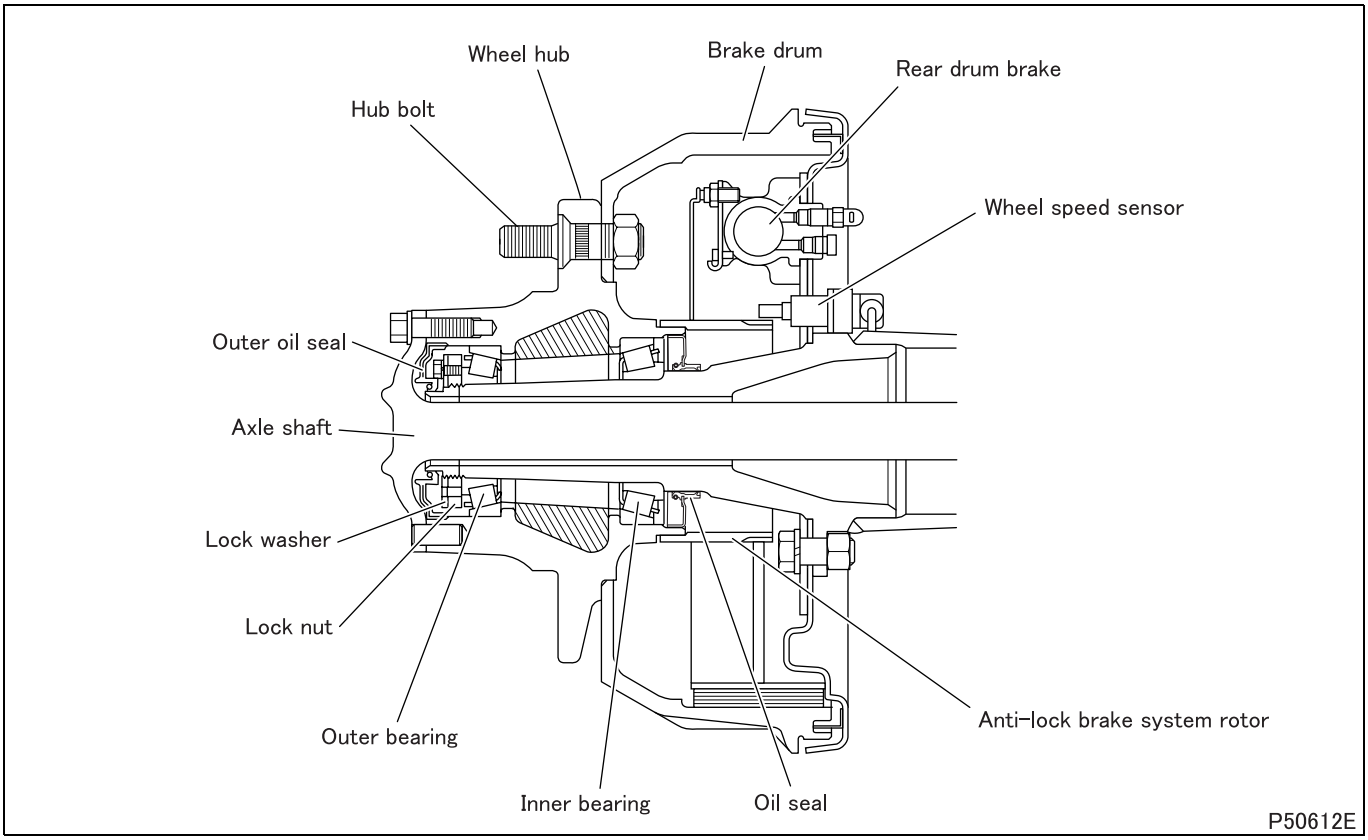

3. Reduction and Differential

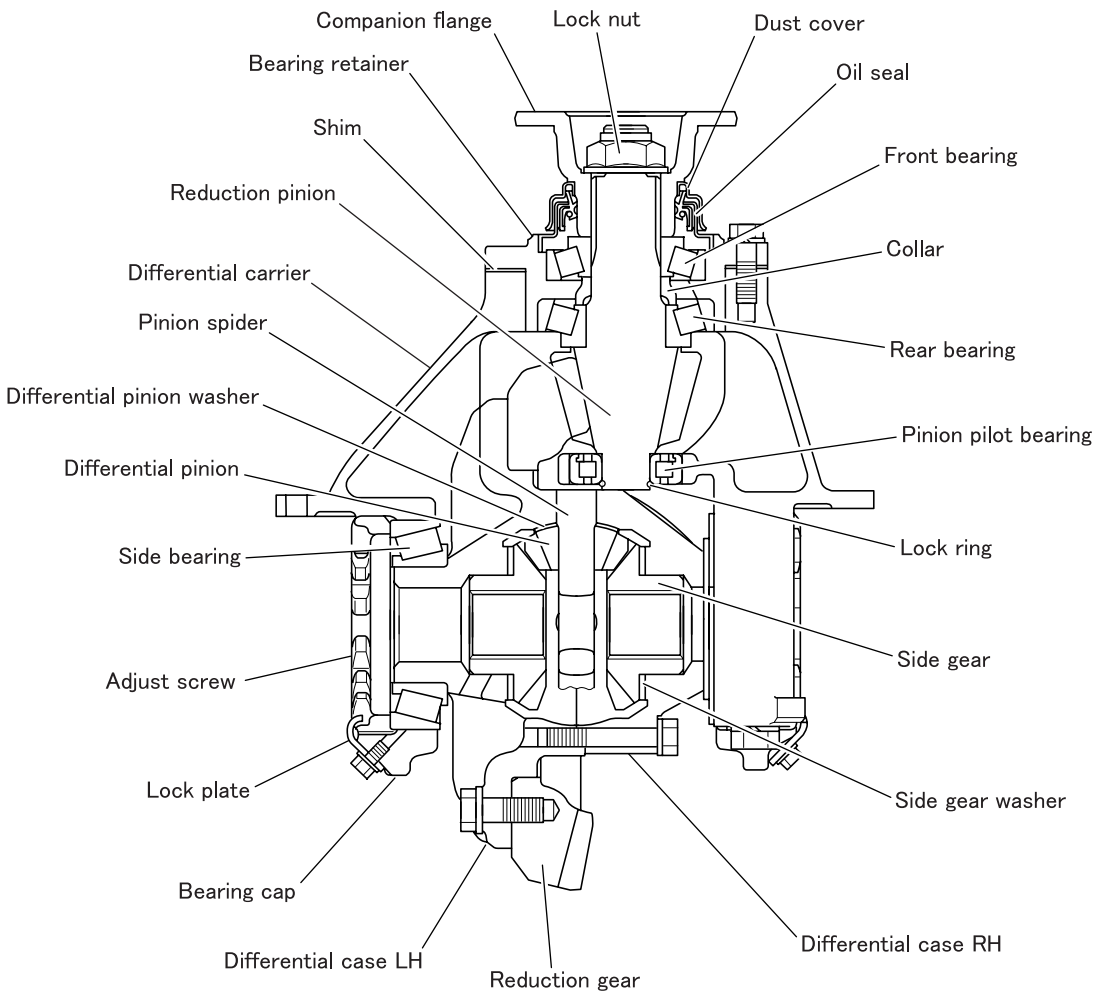

Limited slip differential

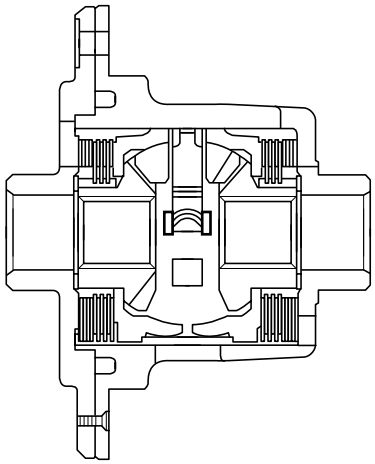

P58332E

4. Limited Slip Differential

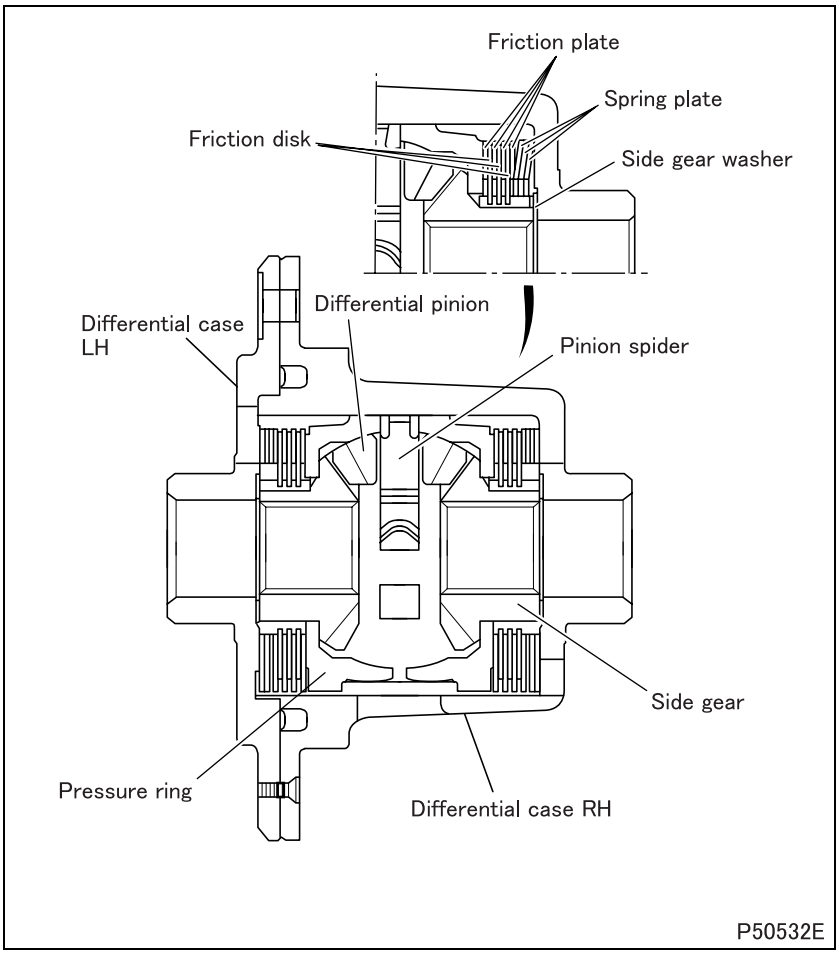

- The friction discs and spring discs, which are fitted in the side gears, and the friction plates, which are fitted in the differential case RH, are pushed against the pressure rings by the spring plates.
- The pressure rings fit in the groove inside the differential case RH and always rotate at the same speed.

4.1 Operating mechanism

- When one wheel spins, a difference in the revolution speed generates between the side gear and the differential case, LH and RH, which causes the friction discs, spring discs and friction plates to revolve relatively to each other. This relative revolution produces a friction torque between the friction discs and friction plates.

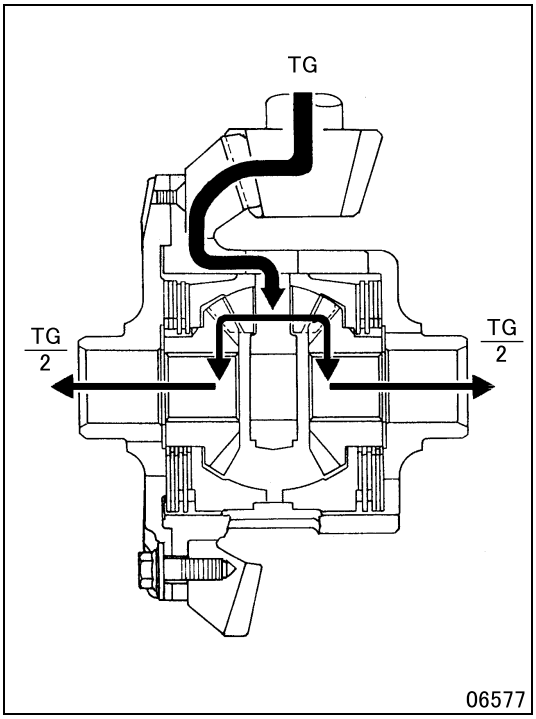

4.2 Operation during straight driving

- During straight driving, the right and left axle shafts rotate at the same speed, and no friction torque generates.
  TG: input torque

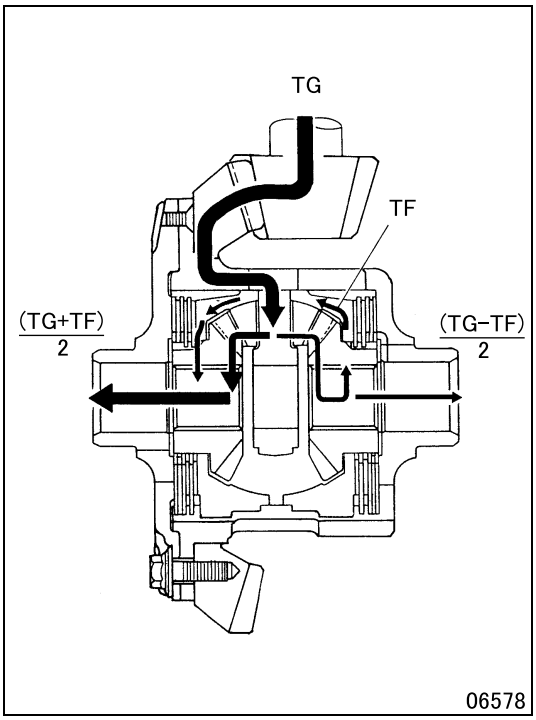

4.3 Operation when there is a difference in rotation speed between right and left wheels

- If one wheel is on a slippery surface such as mud and the other wheel is not, the differential function becomes effective due to a difference in surface resistance. In this state, friction torque TF is generated and this torque works in such a manner as to reduce the difference in rotations between right and left wheels. That is, the faster axle shaft is forced to slow down, and the slower axle shaft is forced to turn faster.
  If one wheel spins due to mud and the like, a large friction torque generates because such a spinning makes large rotational speed difference. Accordingly, a small torque is distributed to the spinning wheel while a large torque is distributed to the non-spinning wheel, which makes it easier for the vehicle to get out of the mud.

$\frac{TG-TF}{2}$ High-speed side (spinning side)

$\frac{TG+TF}{2}$ Low-speed side

Possible causes	Symptoms	Power transmission insufficient									
		Noise when starting and changing gears	Continuous noise while cruising	Intermittent noise while cruising	Noise while cornering	Tires drag while cornering	Propeller shaft turns but vehicle does not move	Oil leakage from companion flange assembly	Oil leakage from differential carrier and axle housing	Oil leakage from axle shaft	Reference Gr
Wheel hub, axle shaft, axle housing	Wheel hub bearing seized, worn or rotation faulty		O								
	Wheel hub bearing broken			O							
	Axle shaft mounting bolts loose			O						O	
	Axle shaft broken						O				
	Axle shaft slips out of spline of side gear						O				
	Axle shaft to spline of side gear backlash excessive	O									
	Oil seal faulty									O	
	Axle housing bent		O								
	Inspection plug and drain plug loose								O		
	Air breather and vent plug clogged							O		O	
Reduction and differential	Gear oil excessive							O			
	Gear oil insufficient	O	O								
	Oil seal faulty							O			
	Sealant faulty								O		
	Reduction and differential assembly mounting nuts and bolts loose			O					O		
	Differential carrier cracked or damaged								O		
	Bearing cap mounting bolts loose			O							
	Side bearing seized, worn or rotation faulty		O		O						
	Side bearing broken			O							
	Side bearing preload adjusted incorrectly		O								
	Reduction pinion or reduction gear broken	O		O	O		O				
	Reduction pinion or reduction gear worn		O		O						
	Reduction pinion or reduction gear damaged		O								
	Reduction gear backlash excessive	O									
	Reduction gear backlash or tooth contact adjusted incorrectly		O								

Possible causes	Symptoms	Power transmission insufficient						Oil leakage from companion flange assembly	Oil leakage from differential carrier and axle housing	Oil leakage from axle shaft	Reference Gr
		Noise when starting and changing gears	Continuous noise while cruising	Intermittent noise while cruising	Noise while cornering	Tires drag while cornering	Propeller shaft turns but vehicle does not move				
Reduction and differential	Starting torque of pinion bearing faulty	O	O								
	Lock nut loose	O	O								
	Front and rear bearings seized		O								
	Front and rear bearings worn		O								
	Front and rear bearings broken			O							
	Pinion pilot bearing worn		O								
	Pinion pilot bearing seized or broken			O							
	Pinion shaft and pinion spider broken						O				
	Reduction gear and differential case mounting bolt and nut loose	O		O							
	Side gear backlash excessive	O									
	Side gear or differential pinion broken			O	O	O	O				
	Side gear or differential pinion seized					O	O				
	Side gear or differential pinion worn				O	O					
	Side gear washer worn or damaged			O	O	O					
	Limited Slip Differential (LSD) broken <With LSD>	O	O	O	O		O				

1. Inspection and Replacement of Axle Oil

Tightening torque (Unit: N·m {ft.lbs, kgf·m})

Mark	Parts to be tightened	Tightening torque	Remarks
–	Inspection plug	110 ± 10 {81 ± 7.4, 11 ± 1}	–
	Drain plug		

Lubricant and/or sealant

Mark	Points of application		Specified lubricant and/or sealant	Quantity
–	Axle housing	D033H, D035H	Gear oil : Normal : Maximum air temperature during operation below 40°C {104°F} API GL-5 SAE 90 Hot area : Maximum air temperature during operation above 40°C {104°F} API GL-5 SAE 140	4.5 L {4.8 qts}

- Use the gear oil with a SAE viscosity of 140 under heavily-loaded, severe conditions such as continuous driving on uphill grades. However, the air temperature must be above 10°C {50°F}.
- Limited slip differential oil API GL-5 SAE 90 is used for models with limited slip differential.

WARNING ⚠

- **The oil temperature is high immediately after the vehicle has stopped, so take care not to scald yourself.**

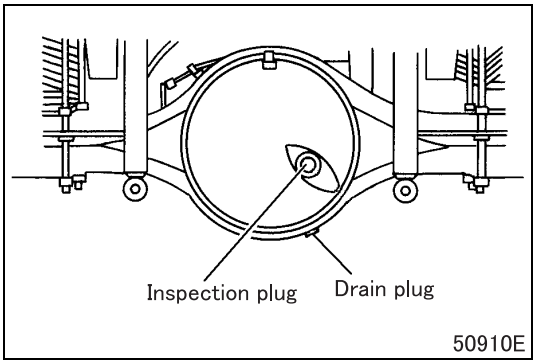

[Inspection]

(1) Inspection of oil quantity

- Remove the inspection plug, and check that oil is filled up to the neck.
- If oil is not sufficient, fill oil from the inspection plug hole up to the neck.

(2) Inspection of oil quality and inclusions

- When draining gear oil, check for oil quality, metal chips and metal powder.
- If an abnormally large amount of metal chips and metal powder is found, disassemble the assembly for service, as abnormalities may be caused inside.

[Replacement]

- Remove the drain plug to drain gear oil. Drainage can be made quickly with the inspection plug removed.
- As the drain plug (magnet type) is a magnet, clean it before installation.
- Fill the specified quantity of gear oil from the inspection plug hole.
- After filling, check that oil is filled up to the neck. If oil is not sufficient, replenish it.

M E M O

WHEEL HUB AND ROTOR

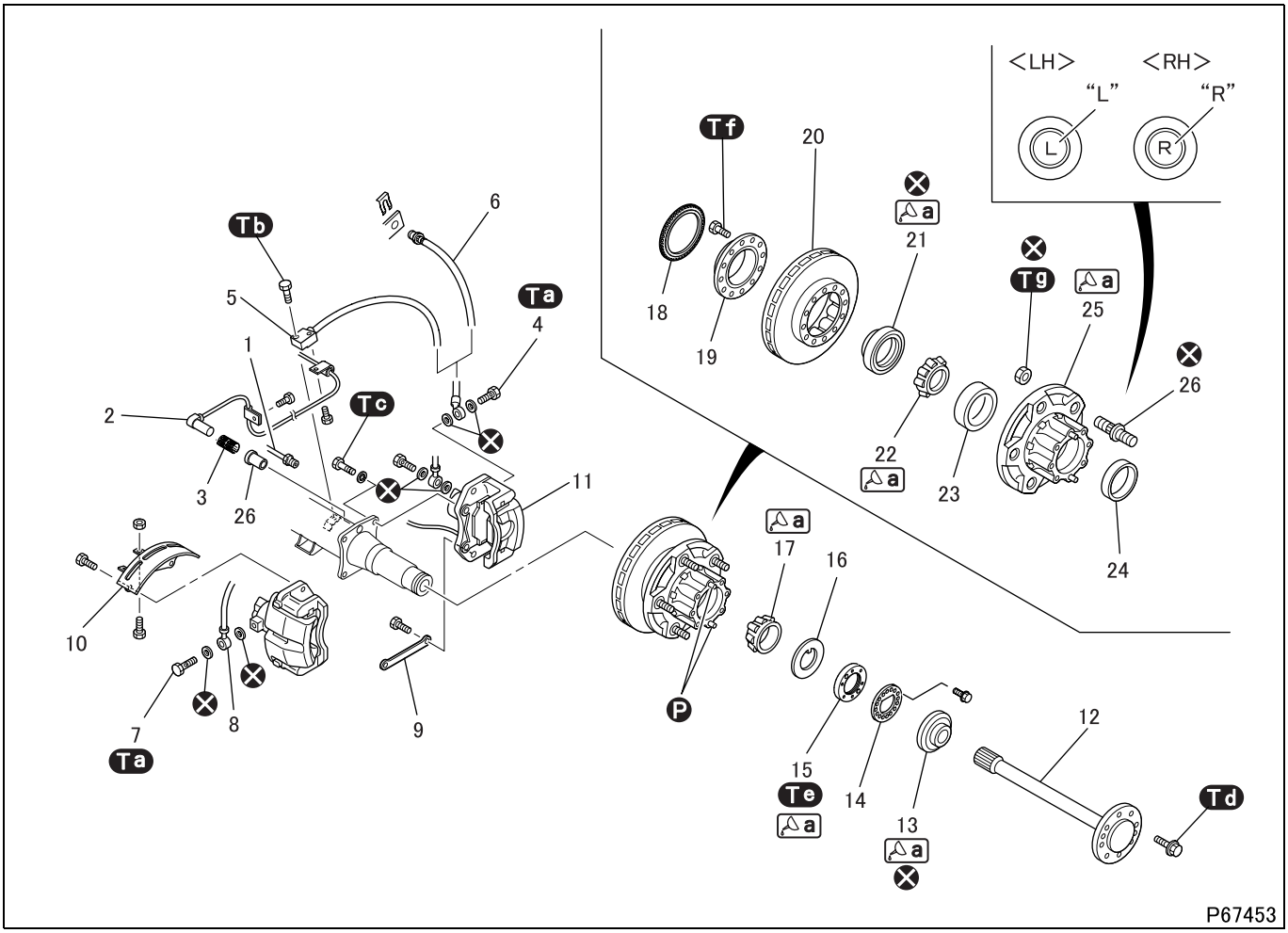

● **Disassembly sequence**

1 Brake pipe
2 Wheel speed sensor
3 Spring spacer
4 Eyebolt
5 Brake hose (with connector)
6 Brake hose (without connector)
7 Eyebolt
8 Brake hose
9 Lower dust shield
10 Upper dust shield
11 Rear disc brake (See Gr35A.)
12 Axle shaft
13 Outer oil seal
14 Lock washer
15 Lock nut
16 Lock plate <FE85>
17 Outer bearing inner race
18 Anti-lock brake system rotor
19 Anti-lock brake system rotor flange
20 Disc rotor
21 Oil seal
22 Inner bearing inner race
23 Inner bearing outer race
24 Outer bearing outer race
25 Wheel hub
26 Hub bolt
27 Sensor holder

Ⓟ: Locating pin
⊗: Non-reusable parts

CAUTION ⚠

- **Plug the brake hose to prevent entry of dust and dirt after it has been removed.**

NOTE

- **Do not remove the anti-lock brake system rotor and sensor holder unless replacing them.**
- **Do not disassemble the disc rotor and wheel hub unless replacing them.**

● Assembly sequence

Follow the disassembly sequence in reverse.

CAUTION ⚠

- **Make sure that the disc rotor surface and disc brake pad surface are free from grease to avoid malfunction of brakes.**
- **Make sure that the brake hose is not twisted when installing it.**
- **Inspect the drag torque of disc brakes after assembly. (See Gr35A.)**

Service standards (Unit: mm {in.})

Location	Maintenance item		Standard value	Limit	Remedy
–	Starting torque of wheel hub bearing (tangential force at hub bolt position with oil seal assembled)		2.0 to 3.9 N·m {1.4 to 2.9 ft.lbs, 0.2 to 0.4 kgf·m} (tangential force: 18 to 32 N {4.0 to 7.2 lbs, 1.8 to 3.3 kgf})	–	Adjust or replace
12	Axle shaft	Bend	1 {0.039} or less	2 {0.079}	Replace
		Bend at flange face	0.03 {0.0012} or less	0.05 {0.0020}	
19	Disc rotor	Runout (measure runout, assembling disc rotor in rear axle)	0.07 {0.0028} or less	0.10 {0.0039}	Replace
		Thickness	40 {1.57}	38 {1.50}	

Tightening torque (Unit: N·m {ft.lbs, kgf·m})

Mark	Parts to be tightened			Tightening torque	Remarks
Ta	Eyebolt			22 ± 2 {16 ± 1.5, 2.25 ± 0.25}	–
Tb	Bolt (brake hose mounting) (with connector)			43.2 ± 10 {32 ± 7.4, 4.4 ± 1.0}	–
Tc	Bolt (rear disc brake mounting)			98 to 140 {72 to 103, 10 to 14}	–
Td	Bolt (axle shaft mounting)			98 to 120 {72 to 87, 10 to 12}	–
Te	Lock nut	Primary tightening	FE83, FE84	98 to 130 {72 to 96, 10 to 13}	–
			FE85	150 to 180 {110 to 130, 15 to 18}	
		Secondary tightening after complete tightening	FE83, FE84	30 to 40 {22 to 29, 3 to 4}	–
			FE85	50 to 60 {37 to 44, 5.1 to 6.1}	
Tf	Bolt (wheel hub and disc rotor mounting)			45 to 60 {33 to 44, 4.6 to 6.1}	–
Tg	Nut (hub bolt mounting)			340 ± 40 {251 ± 30, 35 ± 4}	–

Lubricant and/or sealant

Mark	Points of application	Specified lubricant and/or sealant	Quantity
△a	Lip area of outer oil seal	Wheel bearing grease [NLGI No. 2 (Li soap)]	As required
	Thread area of lock nut		
	Pack space between rollers of outer bearing inner race and inner bearing inner race		
	Lip area of oil seal		
	Pack interior of wheel hub		370 ± 37 g ※ {13.1 ± 1.31 oz}

※: For a wheel hub

Special tools (Unit: mm {in.})

<table>
<tr><th>Mark</th><th>Tool name and shape</th><th>Part No.</th><th>Application</th></tr>
<tr><td>a</td><td>Lock nut adjust tool
 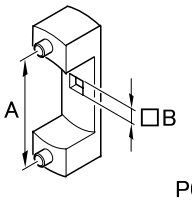

P05617
<table><tr><th></th><th>A</th><th>B</th></tr><tr><td>FE83, FE84</td><td>70
{2.76}</td><td>□12.7
{0.50}</td></tr><tr><td>FE85</td><td>80
{3.15}</td><td>□12.7
{0.50}</td></tr></table></td><td><FE83, FE84>
MB999150
<FE85>
MC888793</td><td>Removal and installation of lock nut</td></tr>
<tr><td>b</td><td>Hub puller
A: Hub puller body
B: Attachment
C: Bolt
 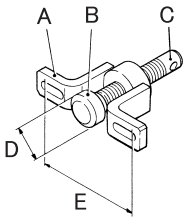

05618
<table><tr><th>D</th><th>E</th></tr><tr><td>ϕ50
{1.97}</td><td>165
{6.50}</td></tr></table></td><td>MB999070

A: MB999071
B: MB999073
C: MB999072</td><td>Removal of wheel hub and rotor</td></tr>
<tr><td>c</td><td>Oil seal installer
 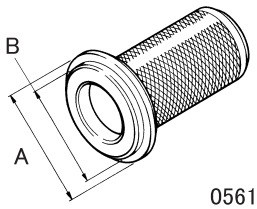

05619
<table><tr><th>A</th><th>B</th></tr><tr><td>ϕ84
{3.31}</td><td>ϕ70
{2.76}</td></tr></table></td><td>MB999097</td><td rowspan="3">Installation of oil seal (to be used in combination)</td></tr>
<tr><td>d</td><td>Oil seal installer
 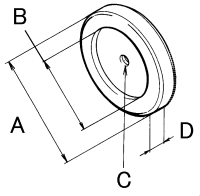

51705
<table><tr><th>A</th><th>B</th><th>C</th><th>D</th></tr><tr><td>ϕ117
{4.61}</td><td>ϕ84
{3.31}</td><td>M10 × 1.25</td><td>20
{0.79}</td></tr></table></td><td>MH062607</td></tr>
<tr><td>e</td><td>Bearing installer
 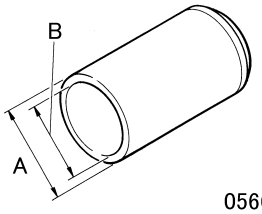

05668
<table><tr><th>A</th><th>B</th></tr><tr><td>ϕ70
{2.76}</td><td>ϕ57
{2.24}</td></tr></table></td><td>MB999100</td><td rowspan="2">Installation of inner and outer bearing outer races (to be used in combination)</td></tr>
<tr><td>f</td><td>Bearing installer
 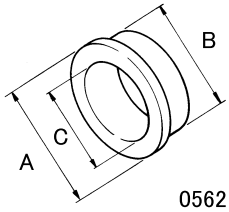

05621
<table><tr><th>A</th><th>B</th><th>C</th></tr><tr><td>ϕ109
{4.29}</td><td>ϕ99
{3.90}</td><td>ϕ77
{3.03}</td></tr></table></td><td>MB999098</td></tr>
</table>

◆Removal procedure◆

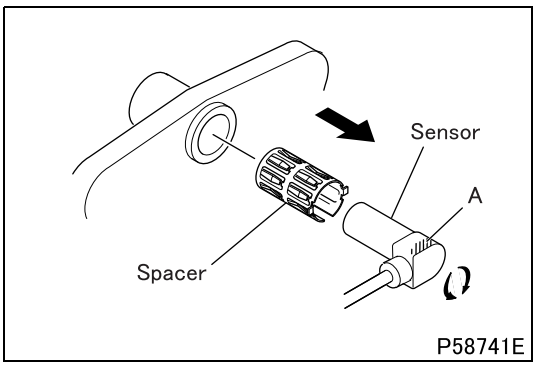

■ **Removal: Wheel speed sensor**

- Hold shaded section A of wheel speed sensor with pliers, and remove the sensor by twisting it slightly in left and right direction.

CAUTION ⚠

- **When removing the wheel speed sensor, never apply a force to it such as tapping it with a hammer, prying it with a screwdriver and pulling the harness, as doing so causes the wire to be broken.**
- **If the wheel speed sensor pulls out lightly, replace the spring spacer.**

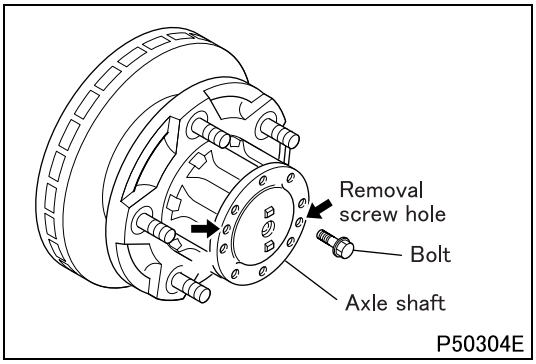

■ **Removal: Axle shaft**

- Screw two axle shaft mounting bolts evenly into the axle shaft removal screw holes to remove the axle shaft.

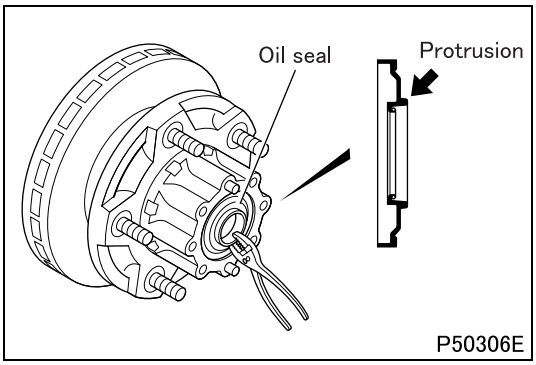

■ **Removal: Outer oil seal**

- To remove the outer oil seal, pull protrusions on the outer periphery of the outer oil seal evenly around the whole circumference with pliers.

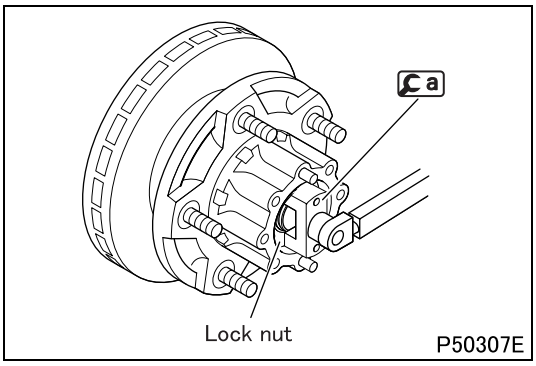

■ **Removal: Lock nut**

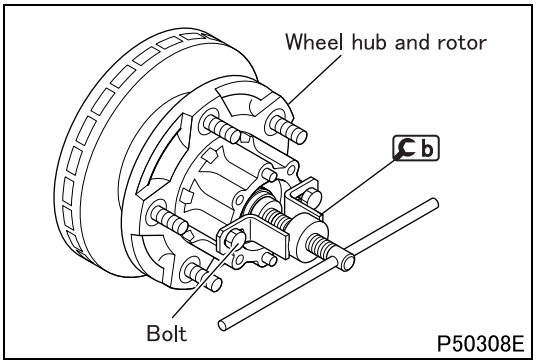

■ **Removal: Wheel hub and rotor**

- Install Cb using axle shaft mounting bolts and remove the wheel hub and rotor assembly.

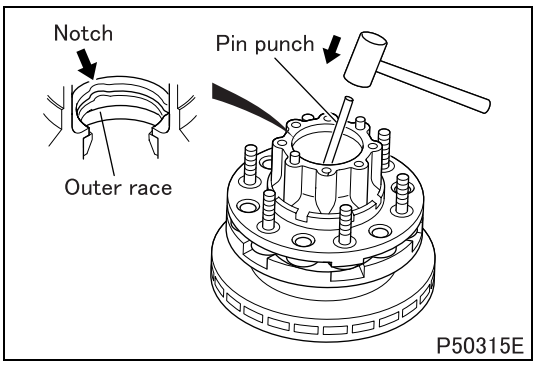

■ **Removal: Inner bearing outer race**

- Drive out the inner bearing outer race by tapping evenly at three indented parts in the wheel hub.

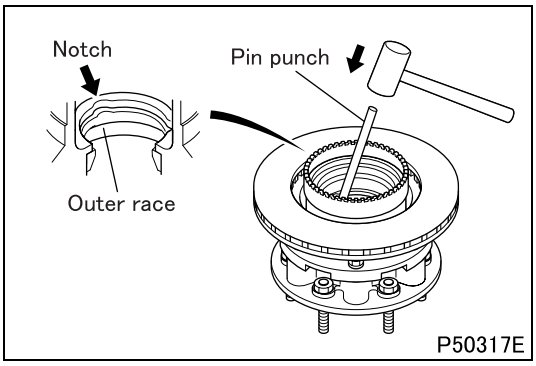

■ **Removal: Outer bearing outer race**

- Drive out the outer bearing outer race by tapping evenly at three indented parts in the wheel hub.

◆Inspection procedure◆

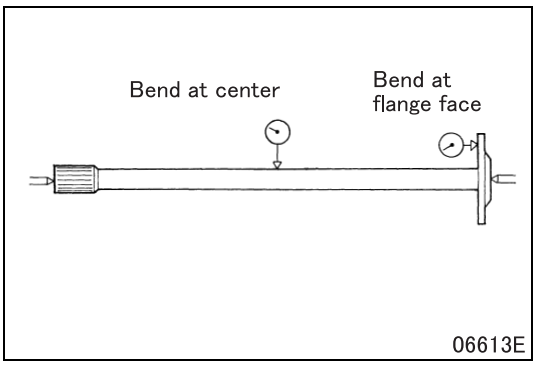

■ **Inspection: Axle shaft**

- Measure the bend of the axle shaft at its center.

NOTE

- **Give the axle shaft one complete turn and read the dial gauge at this time. The bend is one half of the reading.**

- If the measured value exceeds the limit, replace the axle shaft.
- Measure the bend of the flange face of the axle shaft.
- If the measured value exceeds the limit, replace the axle shaft.

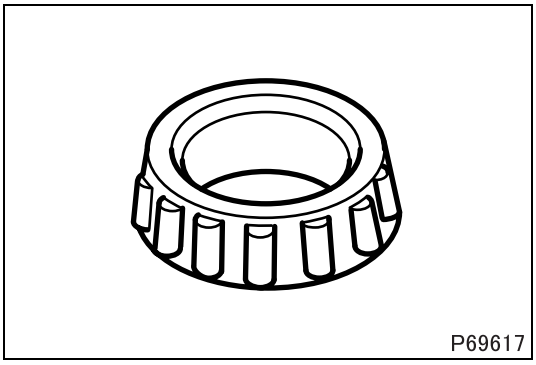

■ **Inspection: Outer bearing inner race**

- Inspect the outer bearing inner race after cleaning the bearing to remove grease completely.
- If any damage, wear, or poor rotating condition is evident in the inner race, replace it with a new one.
- The inner race and outer race should be replaced as a set.

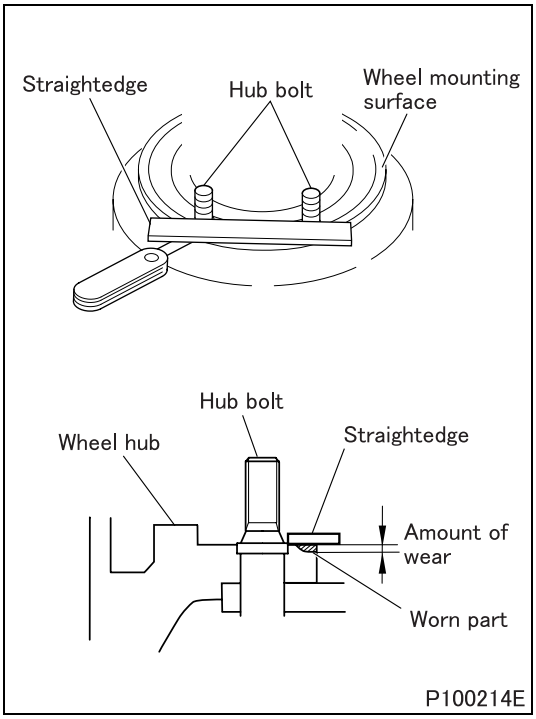

■ **Inspection: Wheel hub**

(1) Visual inspection

- Check the disc wheel mounting surface of the wheel hub by watching and touching. If there is damage or crack on it, replace the wheel hub.
- Make sure that there is not rust, dust, paint or foreign body on the disc wheel mounting surface of the wheel hub to prevent the wheel nut to loosen.
- If any abnormality is found, remove it with sandpaper.

(2) Wear in disc wheel mounting part of wheel hub

- Clean the wheel mounting surface of the wheel hub before inspection.
- Place a straightedge on the hub so as to contact to the two hub bolts on the disc wheel mounting surface.

CAUTION ⚠

- **Make sure that the straightedge does not run onto the hub bolt.**

- Using feeler gauges to measure the amount of wear at the outer periphery of the wheel hub.
  Measure the amount of wear in the area of every hub bolt.
- If the amount of wear at any point exceeds the following standard value, inspect the crack check of wheel hub.
  Wear standard value: 0.8 mm

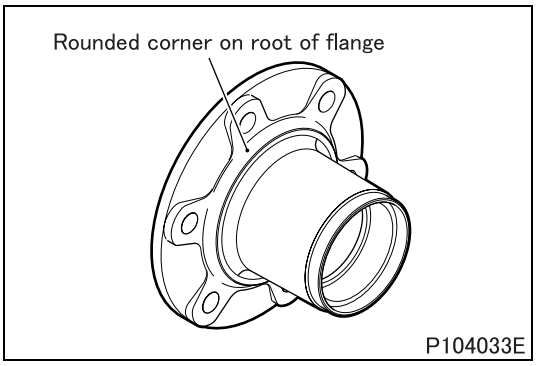

(3) Crack check

- Check if there is not crack on the entire rounded corner on the root of flange of the wheel hub by magnetic particle or liquid penetrant testing. If crack is found, replace the wheel hub.
- If crack is found on the wheel hub bolt, replace it.
- If there is crack or stepped wear on the wheel hub mounting surface of wheel disc, replace it. (See Gr31.)

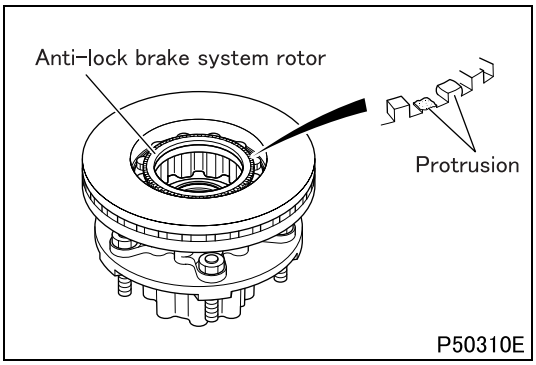

■ **Inspection: Anti-lock brake system rotor**

[Inspection]

- Remove any debris on the anti-lock brake system rotors and check protrusions of the anti-lock brake system rotor for chipping and flattening.
- If any abnormality is found, replace the anti-lock brake system rotor.

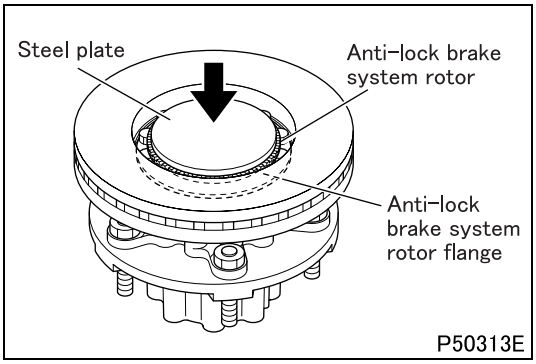

[Installation]

- Warm the anti-lock brake system rotor to approximately 150°C.
- Install the anti-lock brake system rotor and anti-lock brake system rotor flange evenly using a steel plate so as not to allow them to tilt.

WARNING ⚠

- **Handling the warmed rotor by bare hand causes scald.**

■ Inspection: Inner bearing inner race

- Inspect the inner bearing inner race in the same manner as for the outer bearing inner race.
  (See **"■ Inspection: Outer bearing inner race".**)

◆Installation procedure◆

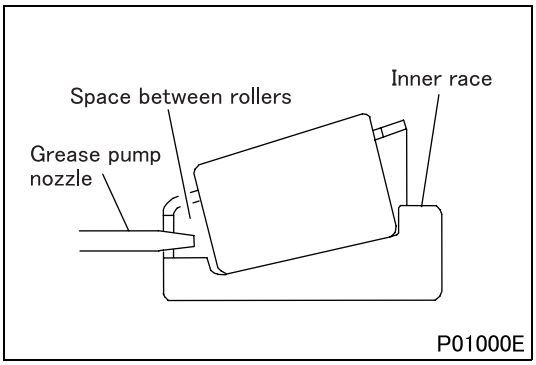

■ Installation: Packing grease in inner bearing inner race

- Insert the grease pump nozzle into the space between rollers of the inner bearing inner race to pack grease sufficiently.

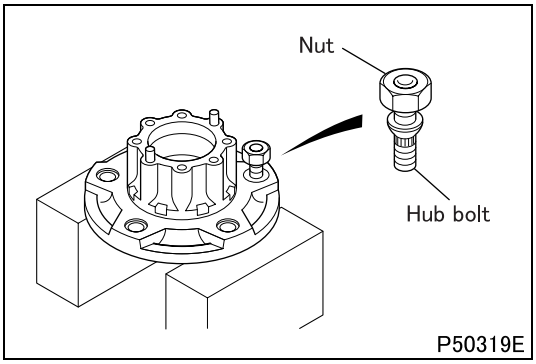

■ Installation: Hub bolt

- Screw the nut into the hub bolt until just before they become flush.
- Drive the hub bolt into the wheel hub vertically by hitting the end face of the nut with a brass punch or the like.

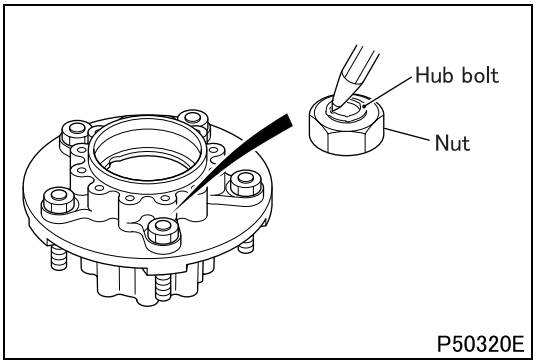

- After tightening the nut to the specified torque, caulk it with a punch.

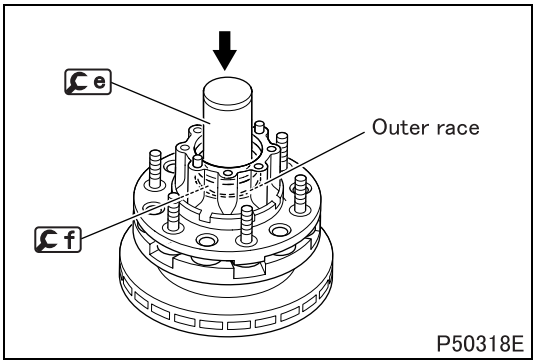

■ **Installation: Outer bearing outer race**

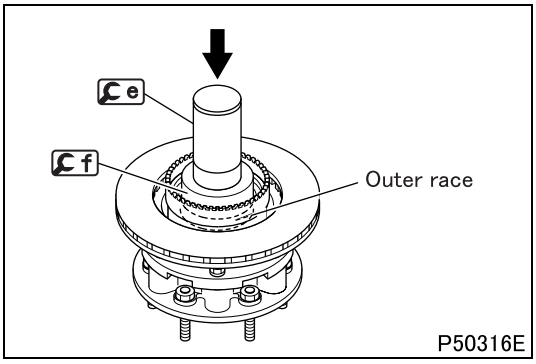

■ **Installation: Inner bearing outer race**

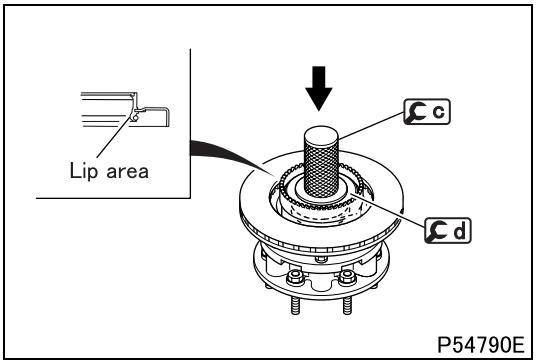

■ **Installation: Oil seal**

- Apply grease to the lip area of the oil seal and install it on the wheel hub in the illustrated direction.

■ **Installation: Packing grease in outer bearing inner race**

- Follow the same procedure as for packing the inner bearing inner race with grease.
  (See **"■ Installation: Packing grease in inner bearing inner race"**.)

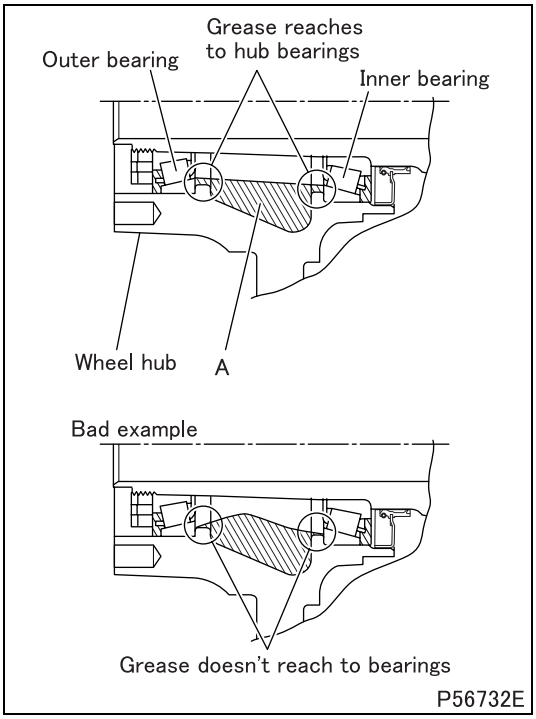

■ **Installation: Packing grease in wheel hub**

- Apply specified amount of grease to inside A of wheel hub so that the grease reaches to inner bearing and outer bearing as illustrated.

CAUTION ⚠

- **Applying grease as illustrated in the "bad example" causes the wheel hub bearing to seize.**

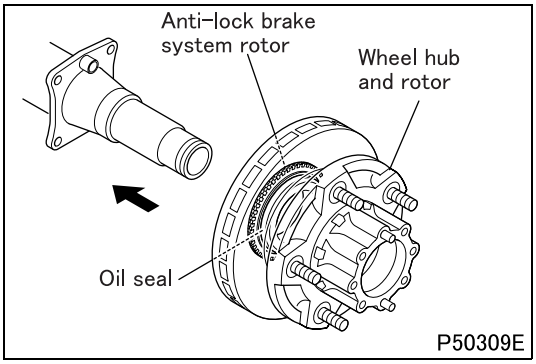

■ **Installation: Wheel hub and rotor**

- Slowly install the wheel hub and rotor assembly so as not to cause damage to the oil seal and anti-lock brake system rotor.

CAUTION ⚠

- **If the anti-lock brake system rotor is damaged, wheel speed sensor signals become abnormal, causing the anti-lock brake system to malfunction.**

■ **Adjustment: Starting torque of wheel hub bearing**

CAUTION ⚠

- **Unless this adjustment procedure is performed, seizure of the wheel bearing can be caused.**

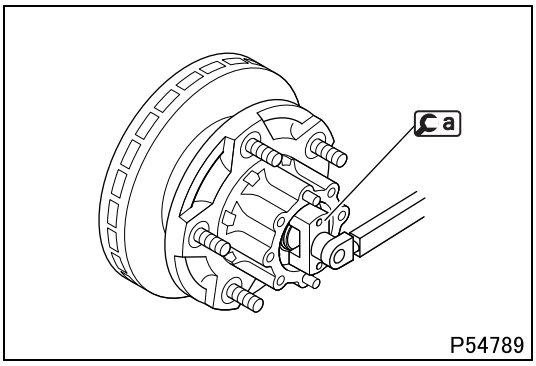

[Adjustment]

- Tighten the lock nut to the specified torque (primary tightening) while turning the wheel hub and rotor, and then loosen it completely.
- Smooth operation of the outer bearing and inner bearing by turning the wheel hub and rotor several times, and then tighten the lock nut to the specified torque (secondary tightening).

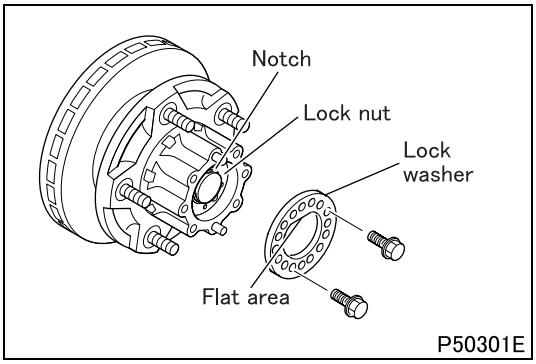

- Insert the flat area of the lock washer, aligning it with the notch of the axle housing, and mount two bolts diagonally to the lock nut.
- If the lock nut does not align with a screw hole of the lock washer, align by loosening the lock nut. Make sure that there is no play in the axial direction.

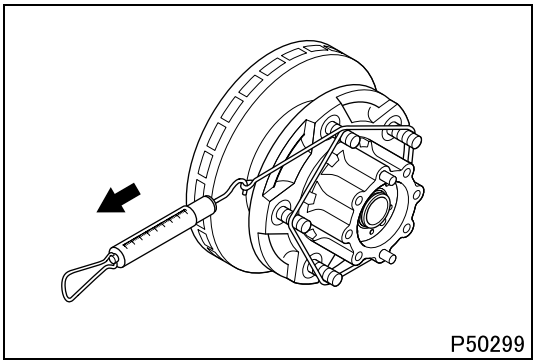

[Inspection]

- After installing the lock washer, carry out the following inspections.
- Measure the tangential force at the hub bolt position using a spring balancer.
- If the tangential force is within the specified value, the starting torque conforms to the standard value. If the measured value deviates from the specified value, repeat adjustment because the adjustment of the lock nut may be insufficient.
- If the result is found to be abnormal, replace the outer and inner bearings.

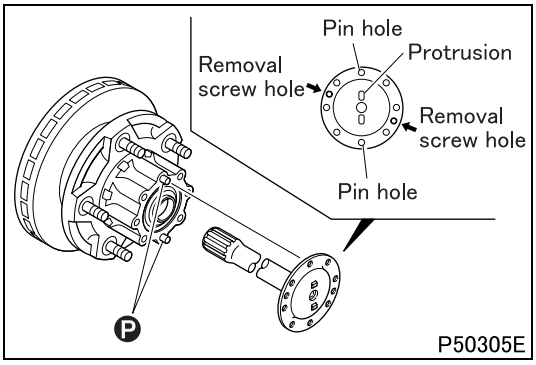

■ Installation: Axle shaft

- Align the pin hole of the locating pin with that of the axle shaft to install the axle shaft.

NOTE

- **A pin hole is not necessarily located at the position of a protrusion on the axle shaft flange face as illustrated. The second hole from a removal screw hole clockwise is a pin hole.**

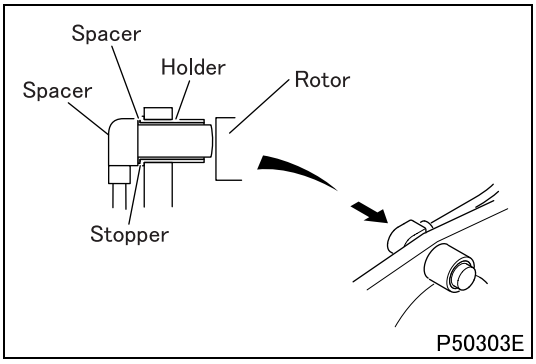

■ Installation: Wheel speed sensor

- Install the wheel speed sensor so that it securely contacts the sensor holder together with the spring spacer.

CAUTION ⚠

- **When installing the wheel speed sensor, never apply a force to it such as tapping it with a hammer, prying it with a screwdriver and pulling the harness, as doing so causes the wire to be broken.**

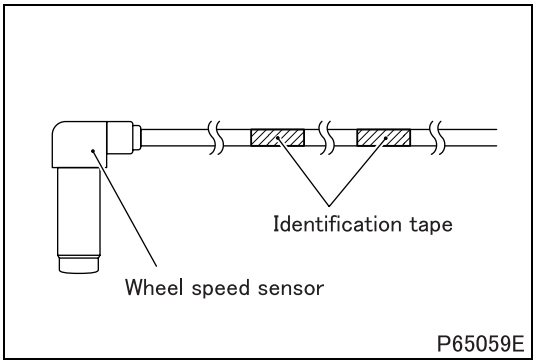

- Using clips, secure in place the wheel speed sensor harness at the identification tape portions, ensuring that the harness is free of kinks, slack and/or interference with other parts.

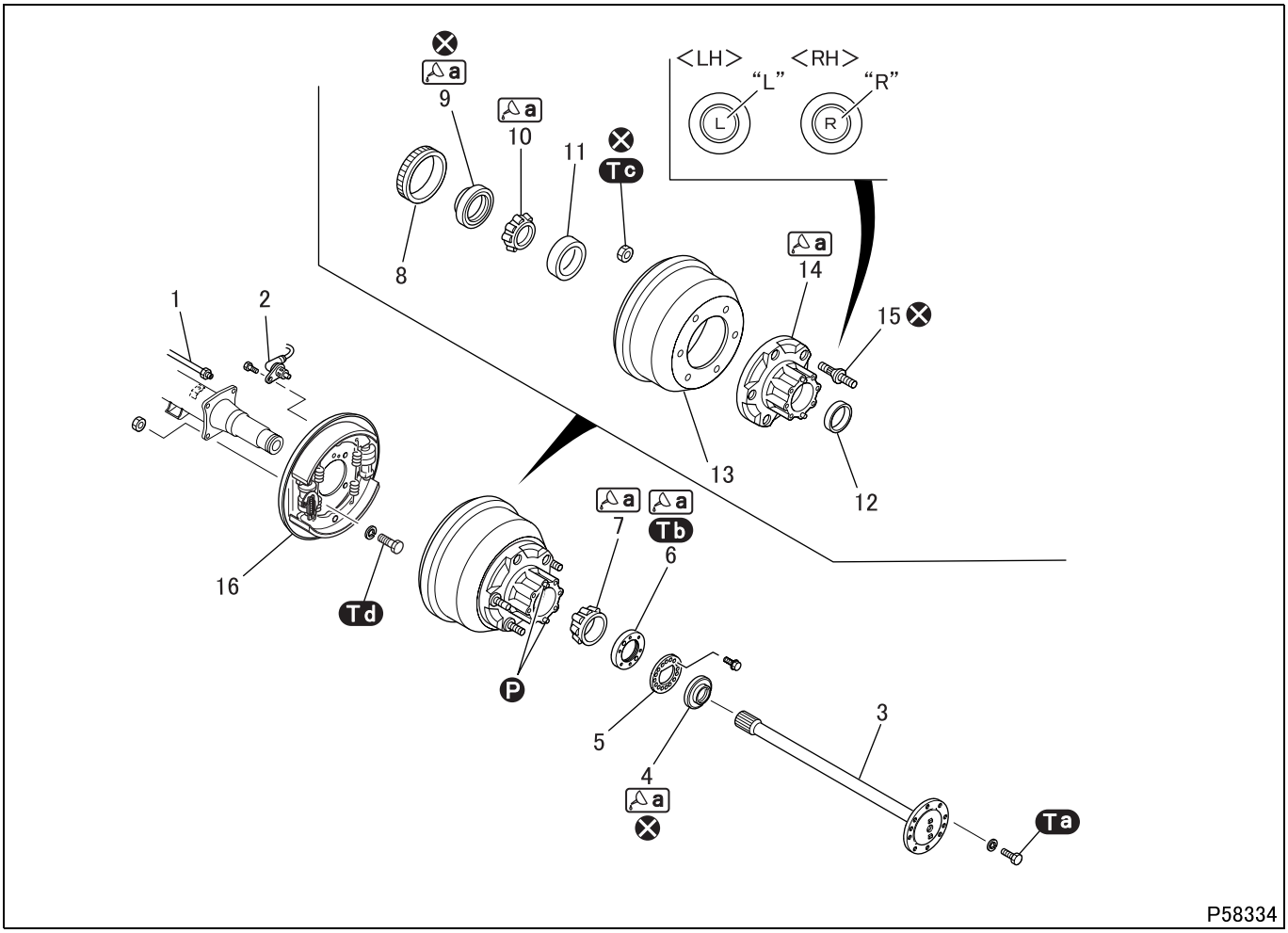

P58334

● **Disassembly sequence**

1 Brake pipe
2 Wheel speed sensor
3 Axle shaft
4 Outer oil seal
5 Lock washer
6 Lock nut
7 Outer bearing inner race
8 Anti-lock brake system rotor
9 Oil seal
10 Inner bearing inner race
11 Inner bearing outer race
12 Outer bearing outer race
13 Brake drum
14 Wheel hub
15 Hub bolt
16 Rear drum brake (See Gr35A.)

Ⓟ: Locating pin
⊗: Non-reusable parts

CAUTION ⚠

- **Be careful not to damage the tip of the wheel speed sensor after removing it.**

NOTE

- **Do not remove the anti-lock brake system rotor unless replacing it.**
- **Do not disassemble the brake drum and wheel hub unless replacing them.**

● **Assembly sequence**

Follow the disassembly sequence in reverse.

WHEEL HUB AND BRAKE DRUM

CAUTION ⚠

- **Make sure that the brake lining surface of the rear drum brake and the inner surface of the brake drum are free from grease to avoid malfunction of brakes.**
- **Adjust brake shoe clearance after assembly. (See Gr35A.)**

Service standards (Unit: mm {in.})

Location	Maintenance item		Standard value	Limit	Remedy
–	Starting torque of wheel hub bearing (tangential force at hub bolt position with oil seal assembled)		2.0 to 3.9 N·m {1.4 to 2.9 ft.lbs, 0.2 to 0.4 kgf·m} (tangential force: 17 to 32 N {3.8 to 7.2 lbs., 1.7 to 3.3 kgf})	–	Adjust or replace
4	Axle shaft	Bend at center	1 {0.039} or less	2 {0.079}	Replace
		Bend at flange face	0.03 {0.0012} or less	0.05 {0.0020}	Replace
14	Brake drum	Inside diameter	320 {12.60}	322 {12.68} (※ 321 {12.64})	Correct or replace
		Cylindricity	0.05 {0.0020}	0.20 {0.0079}	

※ shows the correction limit value.

Tightening torque (Unit: N·m {ft.lbs, kgf·m})

Mark	Parts to be tightened		Tightening torque	Remarks
Ta	Bolt (axle shaft mounting)		98 to 120 {10 to 12}	–
Tb	Lock nut	Primary tightening	98 to 130 {72 to 96, 10 to 13}	–
		Secondary tightening after complete tightening	30 to 40 {22 to 30, 3 to 4}	–
Tc	Nut (brake drum and wheel hub mounting)		340 ± 40 {250 ± 30, 35 ± 4}	–
Td	Bolt (rear drum brake mounting)		98 to 140 {72 to 103, 10 to 14}	–

Lubricant and/or sealant

Mark	Points of application	Specified lubricant and/or sealant	Quantity
a	Lip area of outer oil seal	Wheel bearing grease [NLGI No. 2 (Li soap)]	As required
	Thread area of lock nut		
	Pack space between rollers of outer bearing inner race and inner bearing inner race		
	Lip area of oil seal		
	Pack interior of wheel hub		370 ± 37 g ※ {13.1 ± 1.31 oz}

※: For a wheel hub

Special tools (Unit: mm {in.})

Mark	Tool name and shape	Part No.	Application
a	Lock nut adjust tool <table><tr><td></td><td>A</td><td>B</td></tr><tr><td>Except FE85</td><td>70</td><td rowspan="2">12.7</td></tr><tr><td>FE85</td><td>80</td></tr></table> 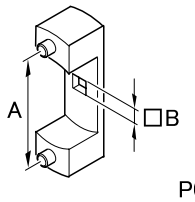 P05617	<Except FE85> MB999150 <FE85> MC888793	Removal and installation of lock nut
b	Hub puller A: Hub puller body B: Attachment C: Bolt <table><tr><td>D</td><td>E</td></tr><tr><td>ϕ50 {1.97}</td><td>16.5 {6.50}</td></tr></table> 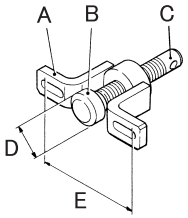 05618	MB999070 A: MB999071 B: MB999073 C: MB999072	Removal of wheel hub and brake drum
c	Oil seal installer <table><tr><td>A</td><td>B</td></tr><tr><td>ϕ84 {3.31}</td><td>ϕ70 {2.76}</td></tr></table> 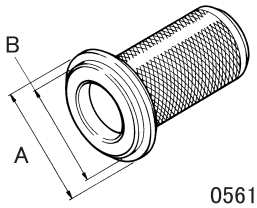 05619	MB999097	Installation of oil seal (to be used in combination)
d	Oil seal installer 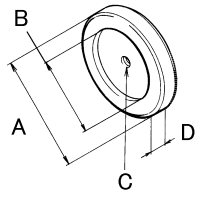 51705 <table><tr><td>A</td><td>B</td><td>C</td><td>D</td></tr><tr><td>ϕ117 {4.61}</td><td>ϕ84 {3.31}</td><td>M10 × 1.25</td><td>20 {0.79}</td></tr></table>	MH062607	
e	Bearing installer <table><tr><td>A</td><td>B</td></tr><tr><td>ϕ70 {2.76}</td><td>ϕ57 {2.24}</td></tr></table> 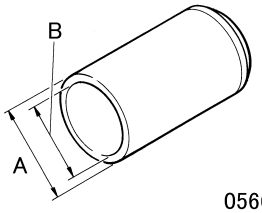 05668	MB999100	Installation of inner and outer bearing outer races (to be used in combination)
f	Bearing installer <table><tr><td>A</td><td>B</td><td>C</td></tr><tr><td>ϕ109 {4.29}</td><td>ϕ99 {3.90}</td><td>ϕ77 {3.03}</td></tr></table> 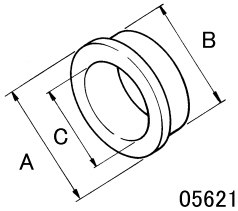 05621	MB999098	

◆Removal procedure◆

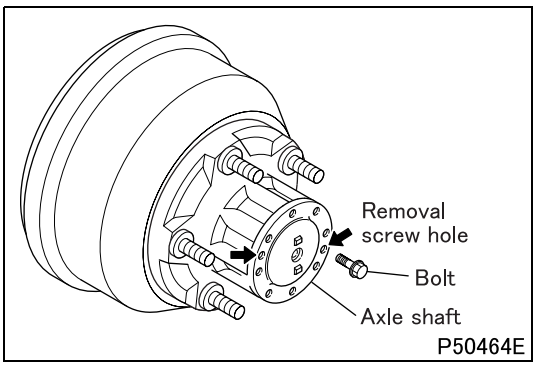

■ **Removal: Axle shaft**

- Screw two axle shaft mounting bolts evenly into the axle shaft removal screw holes to remove the axle shaft.

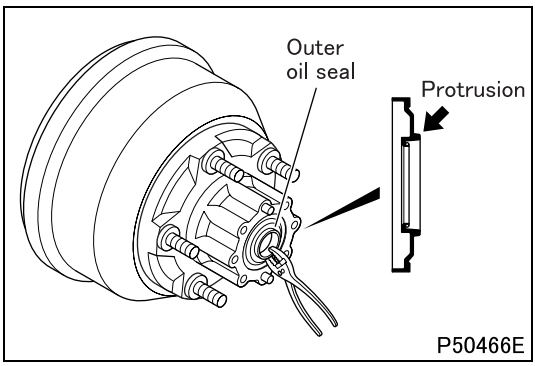

■ **Removal: Outer oil seal**

- To remove the outer oil seal, pull protrusions on the outer periphery of the outer oil seal evenly around the whole circumference with pliers.

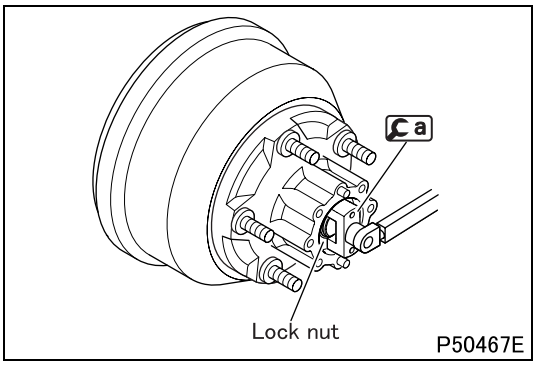

■ **Removal: Lock nut**

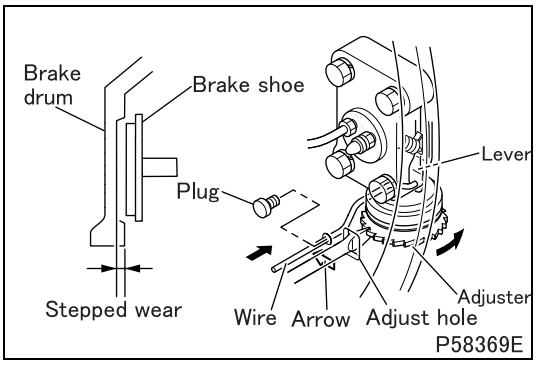

■ **Removal: Wheel hub and brake drum**

- If the brake drum has stepped wear and the wear prevents the wheel hub and brake drum assembly from being removed, the removal can still be effected by taking the following procedure.
- Insert a wire of approx. ϕ2 mm {0.079 in.} into the hole from which the plug has been removed, and lift up the adjust lever of the wheel cylinder.
- Turn the adjuster from the adjust hole in the opposite direction to the arrow on the backing plate to increase the clearance between the brake drum and the brake shoe. Then, remove the wheel hub and brake drum assembly.

CAUTION ⚠

- **Correct or replace the brake drum if any fault is found.**

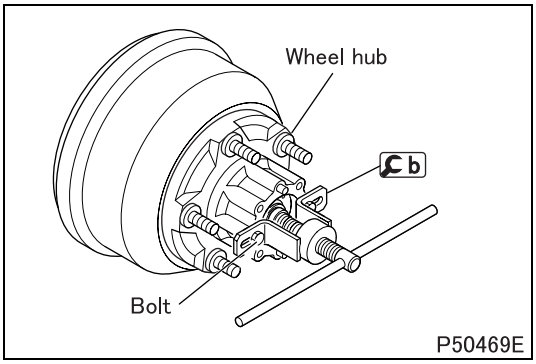

- Install b using axle shaft mounting bolts to remove the wheel hub and brake drum assembly.

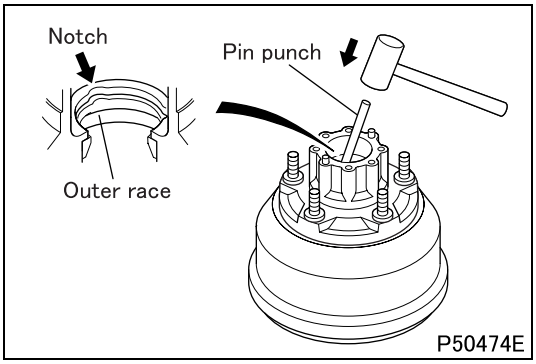

■ **Removal: Inner bearing outer race**

- Drive out the inner bearing outer race by tapping evenly at three or four indented parts in the wheel hub.

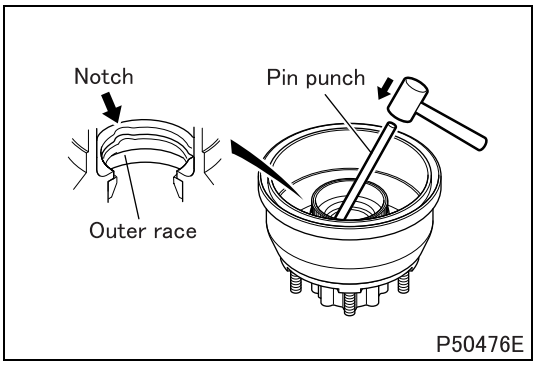

■ **Removal: Outer bearing outer race**

- Drive out the outer bearing outer race by tapping evenly at three or four indented parts in the wheel hub.

◆Inspection procedure◆

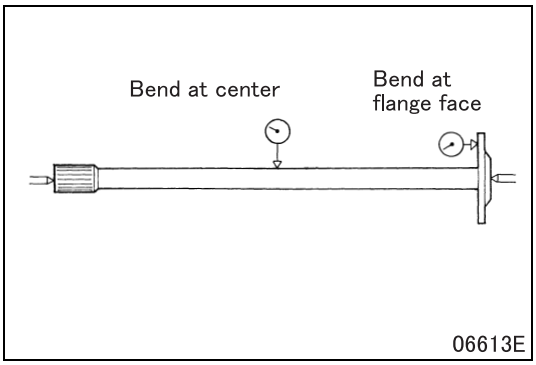

■ **Inspection: Axle shaft**

- Measure the bend of the axle shaft at its center.

NOTE

- **Give the axle shaft one complete turn and read the dial gauge at this time. The bend is one half of the reading.**

- If the measured value exceeds the limit, replace the axle shaft.
- Measure the bend of the flange face of the axle shaft.
- If the measured value exceeds the limit, replace the axle shaft.

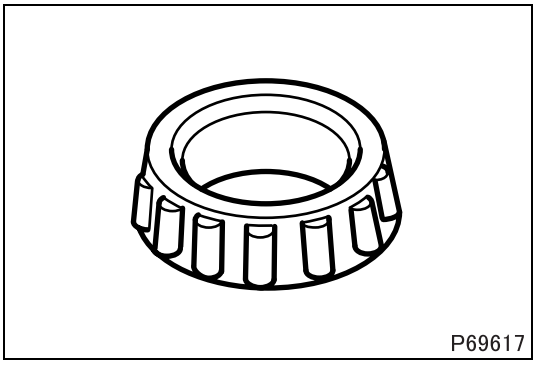

■ **Inspection: Outer bearing inner race**

- Inspect the outer bearing inner race after cleaning the bearing to remove grease completely.
- If any damage, wear, or poor rotating condition is evident in the inner race, replace it with a new one.
- The inner race and the outer race should be replaced as a set.

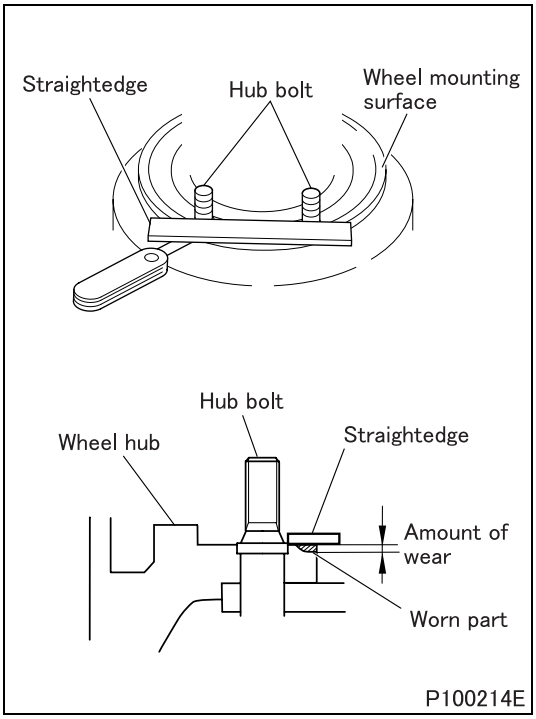

■ **Inspection: Wheel hub**

(1) Visual inspection

- Check the disc wheel mounting surface of the wheel hub by watching and touching. If there is damage or crack on it, replace the wheel hub.
- Make sure that there is not rust, dust, paint or foreign body on the disc wheel mounting surface of the wheel hub to prevent the wheel nut to loosen.
- If any abnormality is found, remove it with sandpaper.

(2) Wear in disc wheel mounting part of wheel hub

- Clean the wheel mounting surface of the wheel hub before inspection.
- Place a straightedge on the hub so as to contact to the two hub bolts on the disc wheel mounting surface.

CAUTION ⚠

- **Make sure that the straightedge does not run onto the hub bolt.**

- Using feeler gauges to measure the amount of wear at the outer periphery of the wheel hub.
  Measure the amount of wear in the area of every hub bolt.
- If the amount of wear at any point exceeds the following standard value, inspect the crack check of wheel hub.
  Wear standard value: 0.8 mm

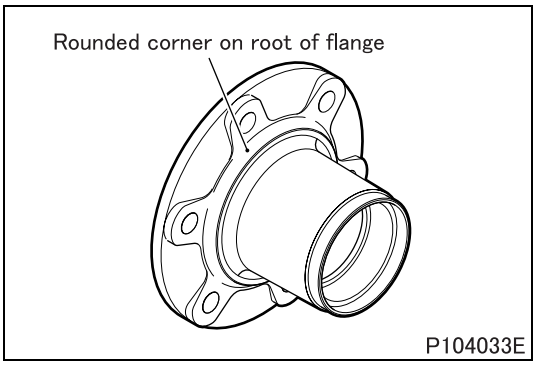

(3) Crack check

- Check if there is not crack on the entire rounded corner on the root of flange of the wheel hub by magnetic particle or liquid penetrant testing. If crack is found, replace the wheel hub.
- If crack is found on the wheel hub bolt, replace it.
- If there is crack or stepped wear on the wheel hub mounting surface of wheel disc, replace it. (See Gr31.)

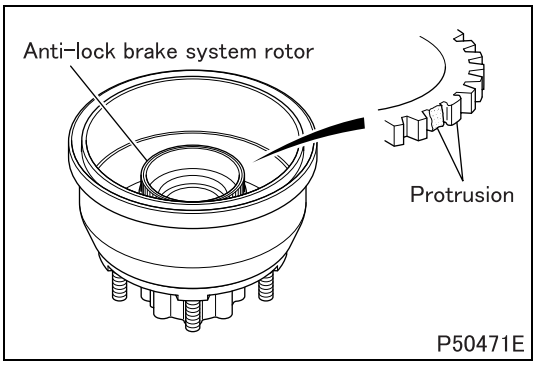

■ **Inspection: Anti-lock brake system rotor**

[Inspection]

- Remove any debris on the anti-lock brake system rotor and check protrusions of the anti-lock brake system rotor for chipping and flattening.
- If any abnormality is found, replace the anti-lock brake system rotor.

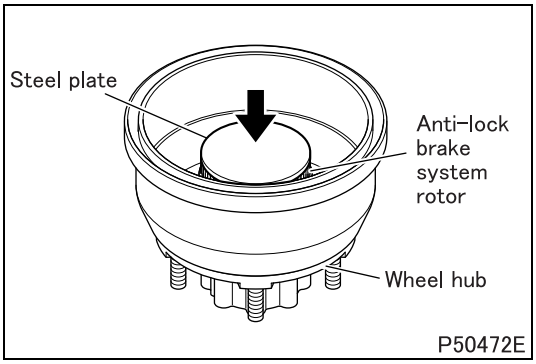

[Installation]

- Warm the anti-lock brake system rotor to approximately 150°C.
- Install the anti-lock brake system rotor and anti-lock brake system rotor flange evenly using a steel plate so as not to allow them to tilt.

WARNING ⚠

- **Handling the warmed rotor by bare hand causes scald.**

■ Inspection: Brake drum

- If cylindricity of the brake drum exceeds the limit or the brake drum has seams, correct the brake drum integrally with the wheel hub within the range of the correction limit.

■ Inspection: Inner bearing inner race

- Inspect the inner bearing inner race in the same manner as for the outer bearing inner race.
  (See **"■ Inspection: Outer bearing inner race"**.)

◆Installation procedure◆

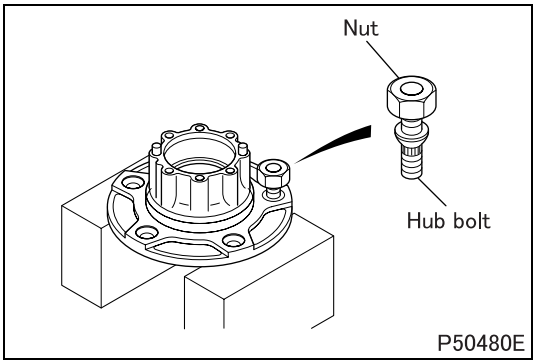

■ Installation: Hub bolt

- Screw the nut into the hub bolt until just before they become flush.
- Drive the hub bolt into the wheel hub vertically by hitting the end face of the nut with a brass punch or the like.

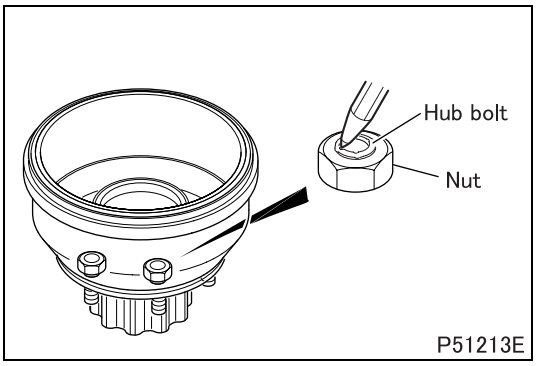

- Assemble the brake drum and wheel hub with the hub bolt. After tightening the nut to the specified torque, crimp it with a punch.

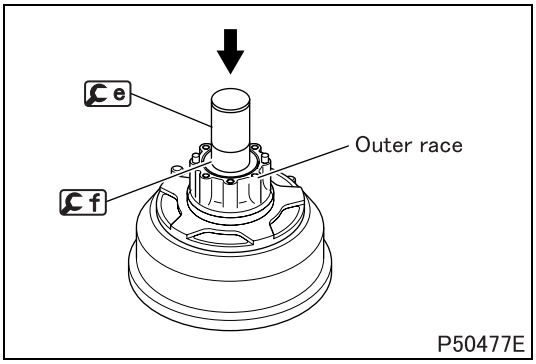

■ Installation: Outer bearing outer race

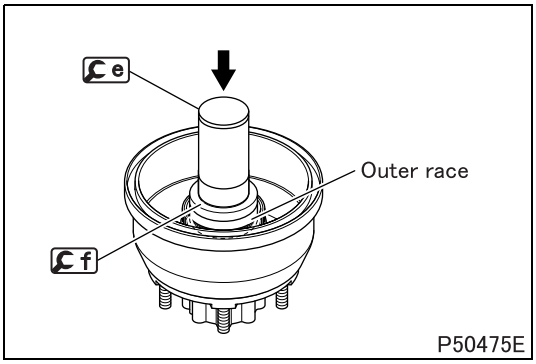

■ **Installation: Inner bearing outer race**

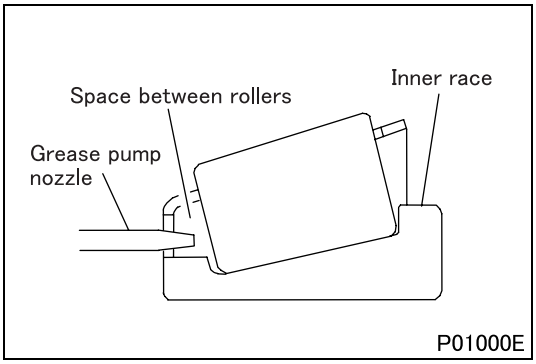

■ **Installation: Packing grease in inner bearing inner race**

- Insert the grease pump nozzle into the space between rollers of the inner bearing inner race to pack grease sufficiently.

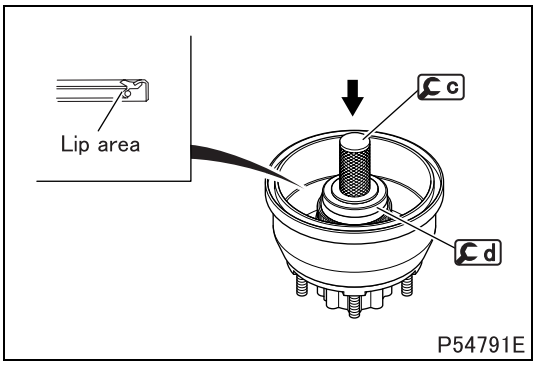

■ **Installation: Oil seal**

- Apply grease to the lip area of the oil seal and install it on the wheel hub in the illustrated direction.

■ **Installation: Packing grease in outer bearing inner race**

- Follow the same procedure as for packing the inner bearing inner race with grease.
  (See **"■ Installation: Packing grease in inner bearing inner race"**.)

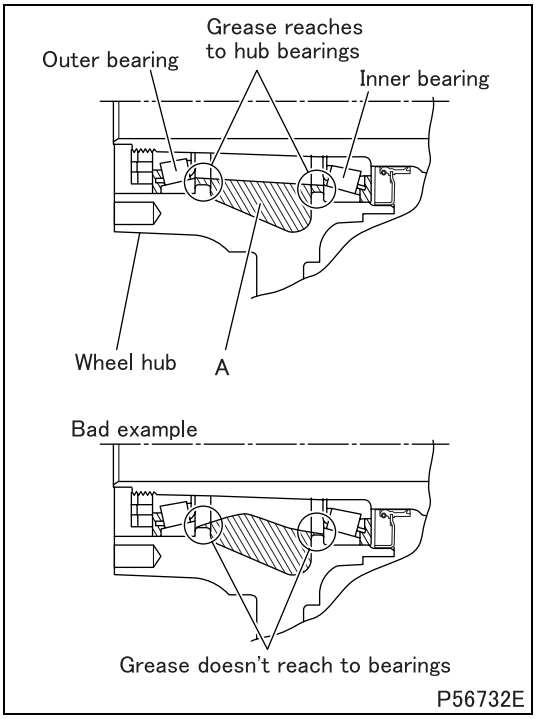

■ **Installation: Parking grease in wheel hub**

- Apply specified amount of grease to inside A of wheel hub so that the grease reaches inner bearing and outer bearing as illustrated.

CAUTION ⚠

- **Applying grease as illustrated in the "bad example" causes the wheel hub bearing to seize.**

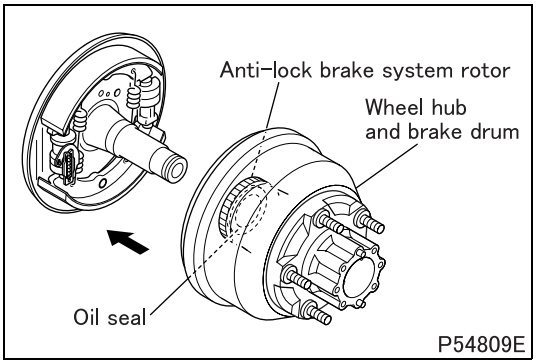

■ **Installation: Wheel hub and brake drum**

- Slowly install the wheel hub and brake drum assembly so as not to cause damage to the oil seal and anti-lock brake system rotor.

CAUTION ⚠

- **If the anti-lock brake system rotor is damaged, wheel speed sensor signals become abnormal, causing the anti-lock brake system to malfunction.**

■ **Adjustment: Starting torque of wheel hub bearing**

CAUTION ⚠

- **Unless this adjustment procedure is performed, seizure of the wheel bearing can be caused.**

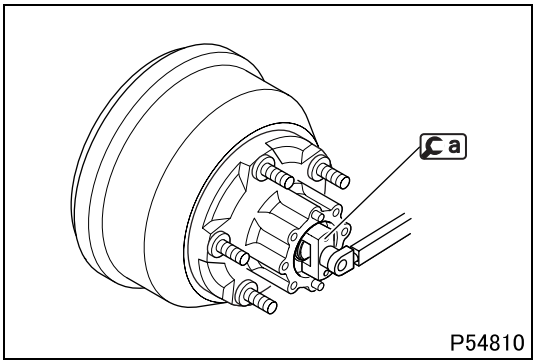

[Adjustment]

- Tighten the lock nut to the specified torque (primary tightening) while turning the wheel hub and brake drum, and then loosen it completely.
- Smooth operation of the outer bearing and inner bearing by turning the wheel hub and brake drum several times, and then tighten the lock nut to the specified torque (secondary tightening).

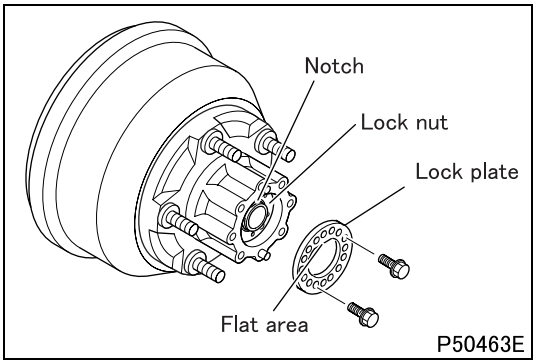

- Insert the flat area of the lock washer, aligning it with the notch of the axle housing, and mount two bolts diagonally to the lock nut.
- If the lock nut does not align with a screw hole of the lock washer, align by loosening the lock nut. Make sure that there is no play in the axial direction.

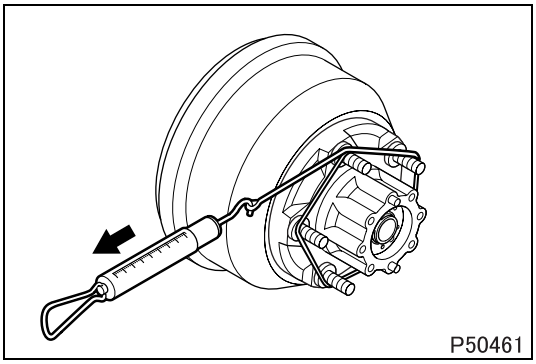

[Inspection]

- After installing the lock washer, carry out the following inspections.
- Make sure that there is no drag in the brake lining and brake drum.
- If any abnormality is found, adjust the brake shoe clearance.
- Measure the tangential force at the hub bolt position using a spring balancer.
- If the tangential force is within the specified value, the starting torque conforms to the standard value. If the measured value deviates from the specified value, repeat adjustment, because the adjustment of the lock nut may be insufficient.
- If the result is found to be abnormal, replace the outer and inner bearings.

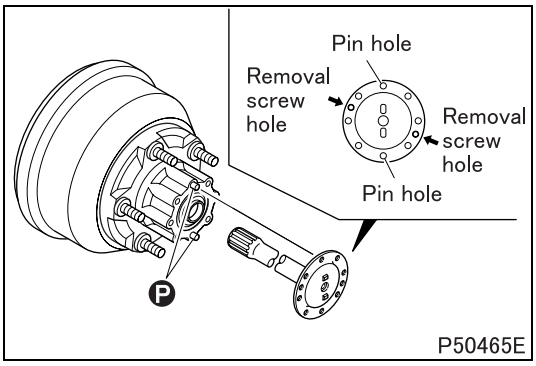

■ Installation: Axle shaft

- Align the pin hole of the locating pin with that of the axle shaft to install the axle shaft.

NOTE

- **A pin hole is not necessarily located at the position of a protrusion on the axle shaft flange face. The second hole from a removal screw hole clockwise is a pin hole.**

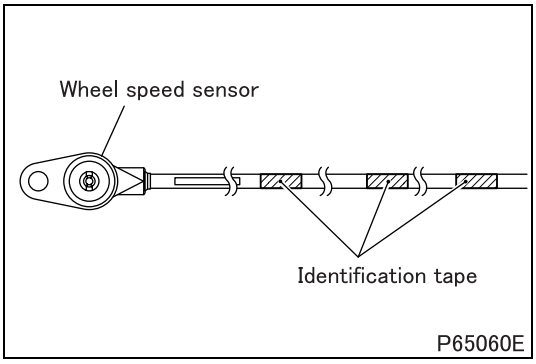

■ Installation: Wheel speed sensor

- Using clips, secure in place the wheel speed sensor harness at the identification tape portions, ensuring that the harness is free of kinks, slack and/or interference with other parts.

M E M O

AXLE HOUSING

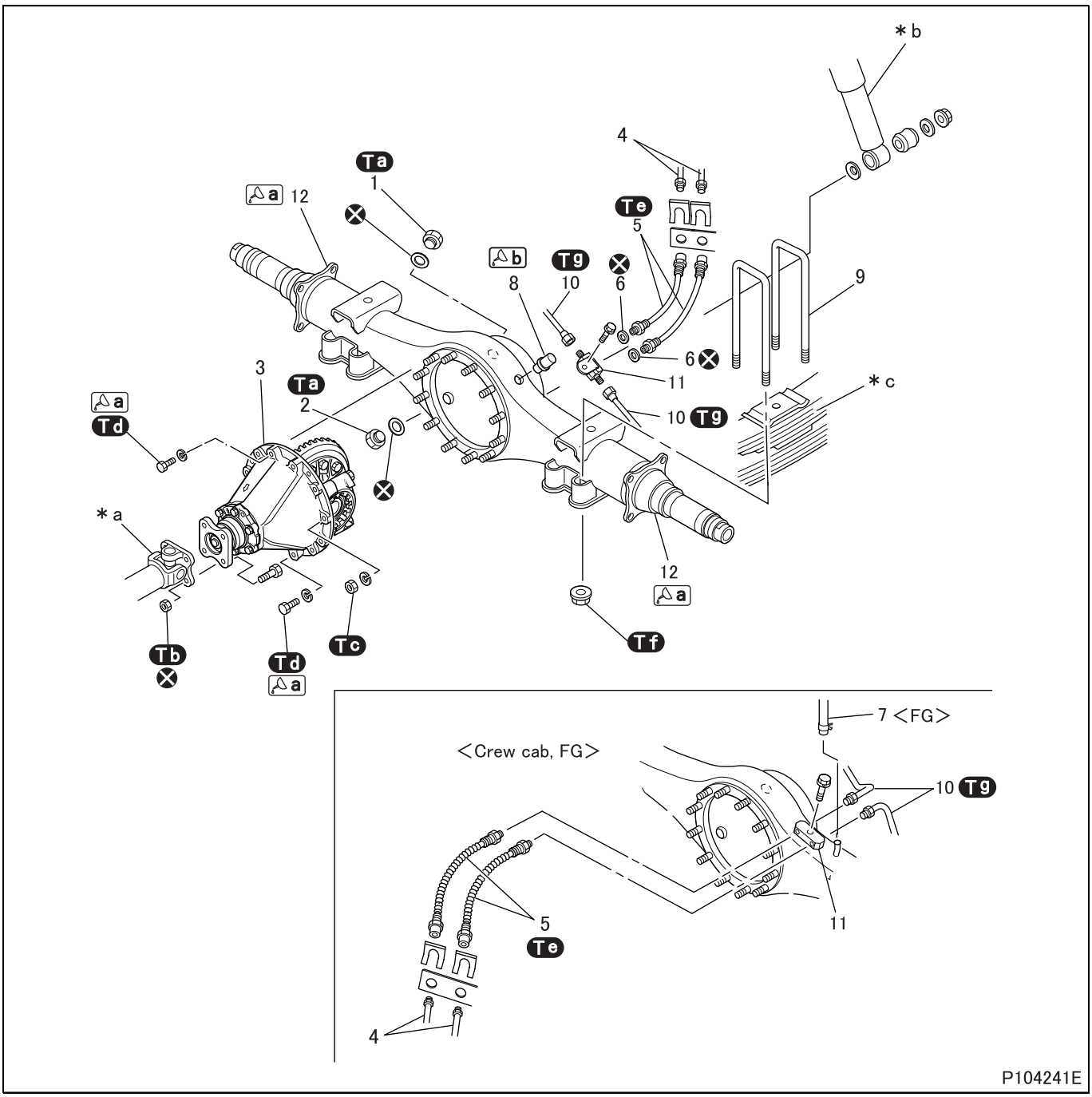

● **Removal sequence**

1 Inspection plug
2 Drain plug
3 Reduction and differential (See later sections.)
4 Brake pipe
5 Brake hose
6 Packing <FE (except crew cab)>
7 Hose <FG>
8 Vent plug <Except FG>
9 U-bolt
10 Brake pipe
11 Connector
12 Axle housing

***a**: Propeller shaft
***b**: Shock absorber
***c**: Leaf spring

⊗: Non-reusable parts

CAUTION ⚠

- **Plug the brake hose and the brake pipe to prevent entry of dust and dirt after they have been removed.**

NOTE

- **Do not remove the axle housing unless it is found faulty.**

● Installation sequence

Follow the removal sequence in reverse.

Service standards (Unit: mm {in.})

Location	Maintenance item		Standard value	Limit	Remedy
8	Injection-valve opening pressure of vent plug		4.9 kPa {0.7 psi, 0.05 kfg/cm^2} or less	–	Replace
12	Axle housing	Runout at outer bearing portion	0.5 {0.020} or less	1 {0.039}	Replace
		Difference between before and after rotation at center	1 {0.039} or less	5 {0.20}	

Tightening torque (Unit: N·m {ft.lbs, kgf·m})

Mark	Parts to be tightened		Tightening torque	Remarks
Ta	Inspection plug		98 ± 120 {72 ± 89, 10 ± 12}	–
	Drain plug			
Tb	Nut (propeller shaft mounting)		100 to 120 {74 to 89, 10 to 12}	M12
Tc	Nut (reduction and differential mounting)		69 to 93 {51 to 69, 7 to 9.5}	–
Td	Bolt (reduction and differential mounting)		83 to 108 {61 to 80, 8.5 to 11}	–
Te	Brake hose	FE (except crew cab)	20.6 to 31.4 {15.2 to 23.2, 2.1 to 3.2}	–
		Crew cab, FG	25.5 to 34.3 {18.8 to 25.3, 2.6 to 3.5}	–
Tf	Nut (U-bolt mounting)	FE (except crew cab)	292 to 394 {215 to 290, 30 ± 40}	M18
		Crew cab	339.1 ± 51 {250 ± 38, 35 ± 5.2}	M18
		FG	240 ± 15 {175 ± 11, 24.5 ± 1.5}	M16
Tg	Brake pipe		12.7 to 16.7 {9.4 to 12, 1.3 to 1.7}	–

Lubricant and/or sealant

Mark	Points of application	Specified lubricant and/or sealant	Quantity
a	Thread area of bolt	ThreeBond 1215	As required
	Reduction and differential mounting surface of axle housing		
b	Axle housing mounting surface of vent plug <Except FG>	ThreeBond 1216	As required

Special tools (Unit: mm {in.})

Mark	Tool name and shape	Part No.	Application
a	Differential carrier base A: ϕ28 {1.10} 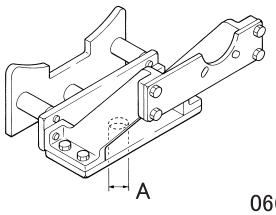 06679	MB999102	Removal and installation of reduction and differential

◆Removal procedure◆

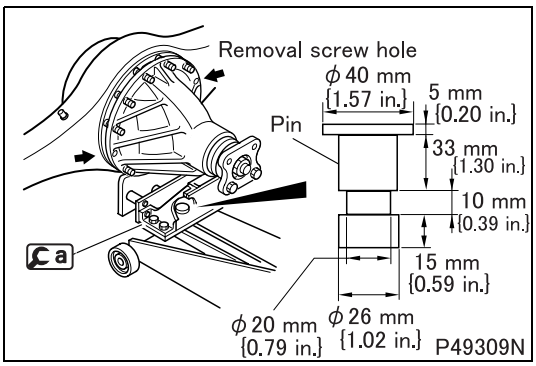

■ Removal: Reduction and differential

- Remove the saucer of the garage jack and place [a] on it. Fabricate the pin as illustrated, insert and fix it with bolts that have fixed the saucer.
- Screw two bolts evenly into the reduction and differential removal screw holes (as shown in illustration) to remove the reduction and differential.
  Bolt size: M12 × 1.25 mm

◆Inspection procedure◆

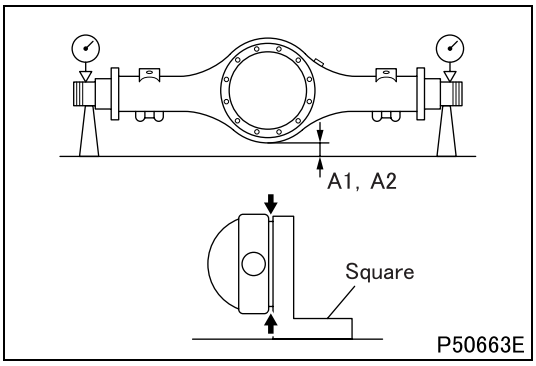

■ Inspection: Axle housing

- Horizontally support the inner bearing fittings at both ends of the housing spindle of the axle housing.
- Apply a dial gauge to the outer bearing fitting and turn it 360 degrees to measure runout.
- For measurement of A1 and A2, place the axle housing at right angles using a square and measure A1. Then, turn it 180 degrees and measure A2.
- If the measured value exceeds the limit, replace the axle housing.

◆Installation procedure◆

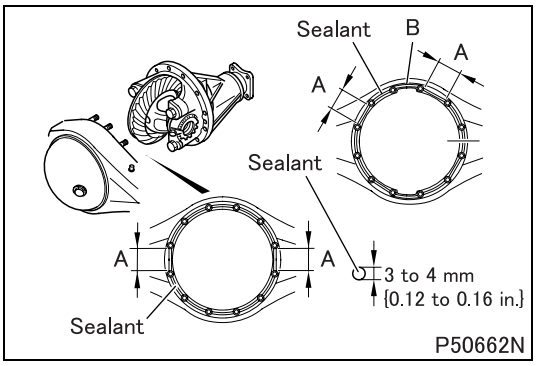

■ Installation: Reduction and differential

- Clean a seal surface of each part.
- Apply sealant to the reduction and differential mounting surface of the axle housing evenly and without breaks. Apply sealant in a straight line direction for illustrated position A and along the outer periphery for notches of illustrated position B.

M E M O

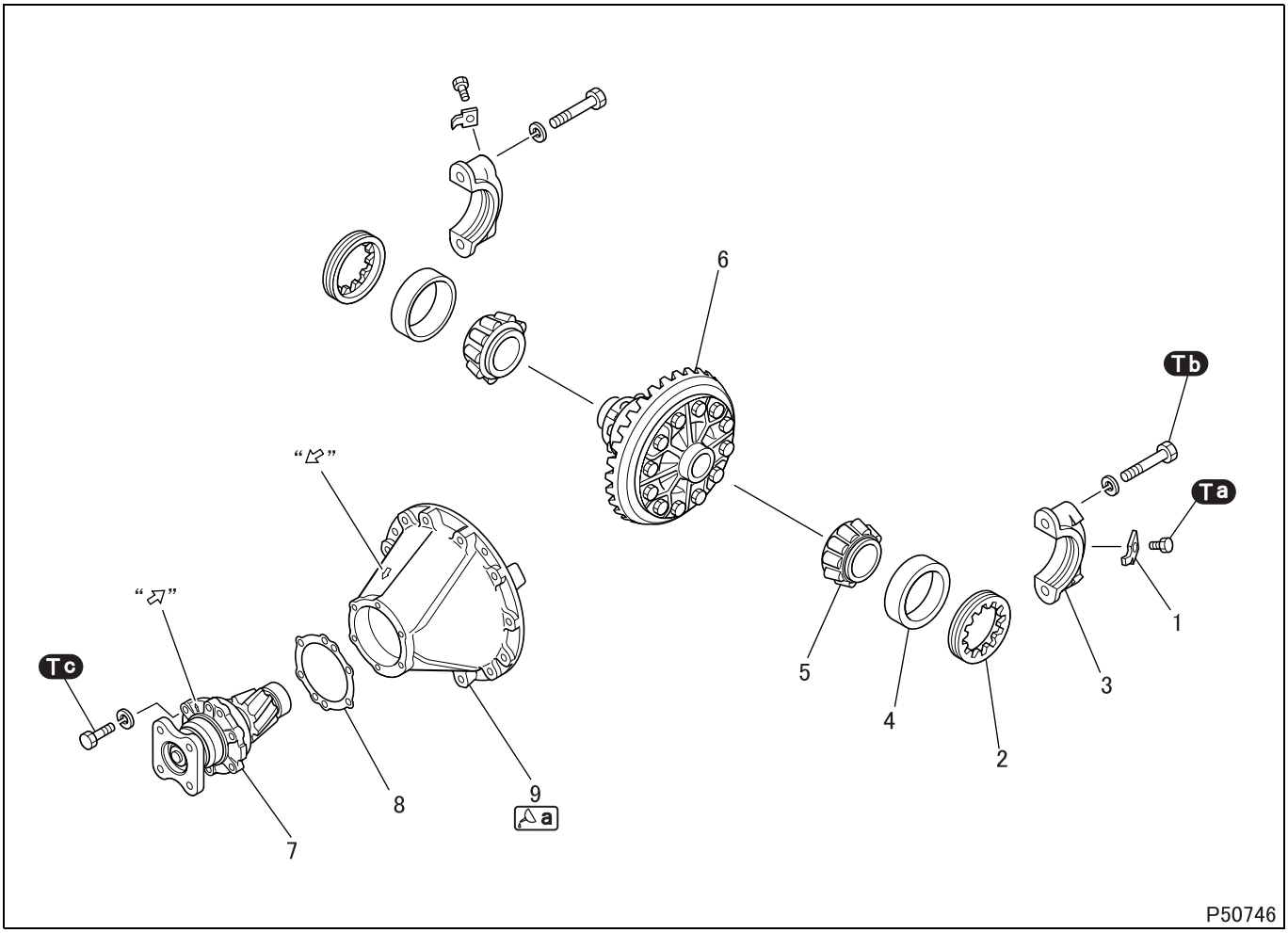

● **Disassembly sequence**

1 Lock plate
2 Side bearing nut
3 Bearing cap
4 Side bearing outer race
5 Side bearing inner race
6 Differential (See later sections.)
7 Reduction pinion (See later sections.)
8 Shim
9 Differential carrier

CAUTION ⚠

- **Keep side bearings that have been removed separated from each other and ensure that during installation each one is correctly placed.**
- **Be sure to replace the bearing cap, differential carrier and bolts as a differential carrier set.**
- **Be sure to replace the reduction pinion and the reduction gear of the differential as a reduction gear set.**

NOTE

- **Record the number and thickness of shims to use them as reference at assembly.**

● **Assembly sequence**

Follow the disassembly sequence in reverse.

Service standards (Unit: mm {in.})

Location	Maintenance item	Standard value	Limit	Remedy
7, 8	Starting torque of side bearing	2.0 to 2.9 N·m {1.4 to 2.2 ft.lbs, 0.2 to 0.3 kgf·m}	–	Adjust
9	Wobble at back face of reduction gear	0.1 {0.0039} or less	–	Replace
9, 11	Backlash between reduction gear and reduction pinion	0.20 to 0.28 {0.0079 to 0.011}	0.5 {0.020}	Adjust or replace

Tightening torque (Unit: N·m {ft.lbs, kgf·m})

Mark	Parts to be tightened	Tightening torque	Remarks
Ta	Bolt (lock plate mounting)	20 to 26 {15 to 19, 2.0 to 2.7}	–
Tb	Bolt (bearing cap mounting)	200.9 {150, 20.5}	–
Tc	Bolt (pinion mounting)	67 to 90 {49 to 67, 6.8 to 9.2}	–

Lubricant and/or sealant

Mark	Points of application	Specified lubricant and/or sealant	Quantity
a	Pinion pilot bearing mounting surface of differential carrier	Loctite 601	As required

Special tools (Unit: mm {in.})

<table>
<tr><th>Mark</th><th>Tool name and shape</th><th>Part No.</th><th>Application</th></tr>
<tr><td>a</td><td>
Differential working base assembly
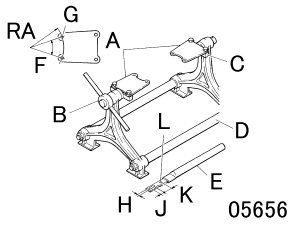

05656
<table>
<tr><th colspan="4">Component</th><th>Part No.</th></tr>
<tr><td rowspan="3">A</td><td colspan="3">Attachment</td><td>–</td></tr>
<tr><td>RA</td><td>F</td><td>G</td><td>–</td></tr>
<tr><td>R158 {6.22}</td><td>30°</td><td>ϕ13 {0.51}</td><td>MB999040</td></tr>
<tr><td>B</td><td colspan="3">Holder</td><td>MB999036</td></tr>
<tr><td>C</td><td colspan="3">Holder</td><td>MB999037</td></tr>
<tr><td>D</td><td colspan="3">Working base</td><td>MB999035</td></tr>
<tr><td>E</td><td colspan="3">Flange stopper</td><td>MB999096</td></tr>
</table>
<table>
<tr><th>H</th><th>J</th><th>K</th><th>L</th></tr>
<tr><td>11 {0.43}</td><td>20 {0.79}</td><td>40 {1.57}</td><td>ϕ11 {0.43}</td></tr>
</table>
</td><td>MB999034</td><td>Workbench for reduction and differential

(flange stopper is unused)</td></tr>
<tr><td>b</td><td>
Adapter
<table>
<tr><th>A</th><th>B</th></tr>
<tr><td>ϕ45 {1.77}</td><td>ϕ59 {2.32}</td></tr>
</table>
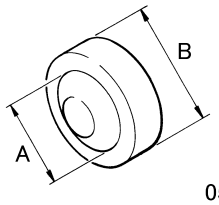

05658
</td><td>MB999076</td><td>Removal of side bearing inner race (to be used in combination with commercial bearing puller)</td></tr>
<tr><td>c</td><td>
Bearing installer
<table>
<tr><th>A</th><th>B</th></tr>
<tr><td>ϕ80 {3.15}</td><td>ϕ70 {2.76}</td></tr>
</table>
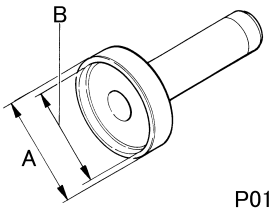

P01039
</td><td>MH061748</td><td>Installation of side bearing inner race</td></tr>
<tr><td>d</td><td>
Bearing retainer guide pin
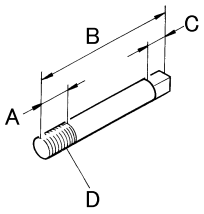

P01041
<table>
<tr><th>A</th><th>B</th><th>C</th><th>D</th></tr>
<tr><td>18 {0.71}</td><td>85 {3.35}</td><td>12 {0.47}</td><td>M12 × 1.25</td></tr>
</table>
</td><td>MH061745</td><td>Installation of reduction pinion (two pieces are used)</td></tr>
</table>

◆Work before removal◆

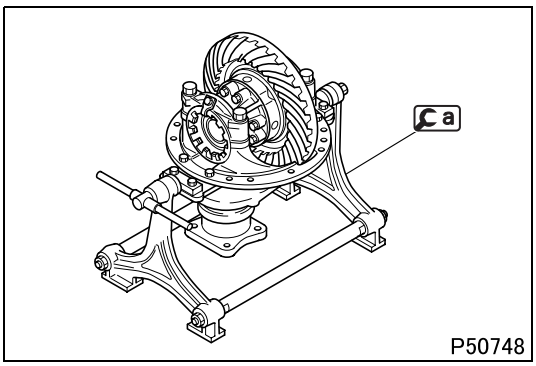

■ **Preparatory work: Installation of differential working base assembly**

- Install the reduction and differential on a.

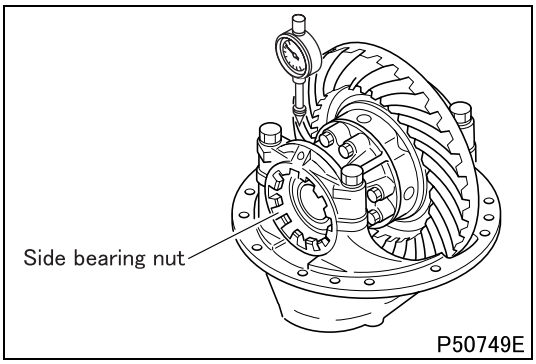

■ **Inspection: Backlash between reduction gear and reduction pinion**

- If backlash is found faulty, the tightening amount of the side bearing nut is probably inappropriate.

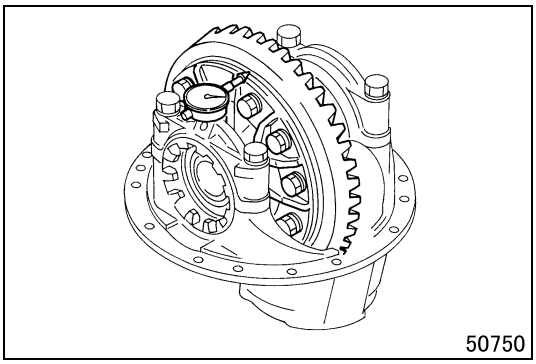

■ **Inspection: Wobble at back face of reduction gear**

- Measure wobble at the illustrated position of the reduction gear.

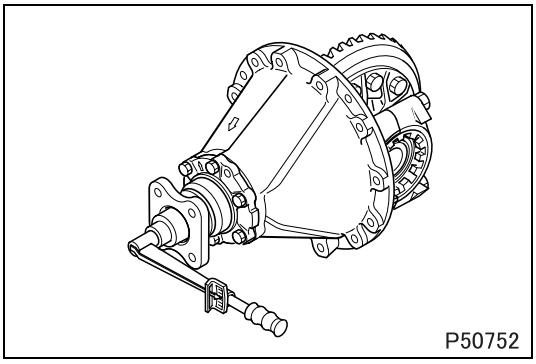

■ **Inspection: Starting torque of side bearing**

- Measure starting torque of the pinion assembly using a torque wrench and calculate the starting torque of the side bearing using the following formula.
  (Total starting torque – Pinion bearing starting torque (See later section.)) × Final ratio = Side bearing starting torque

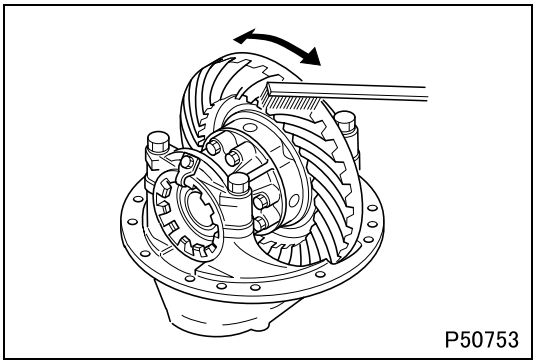
P50753

■ **Inspection: Tooth contact of reduction gear**

- Apply red lead to three to four teeth at three equally spaced points of the reduction gear.
- Turn the reduction gear several times to check for tooth contact.

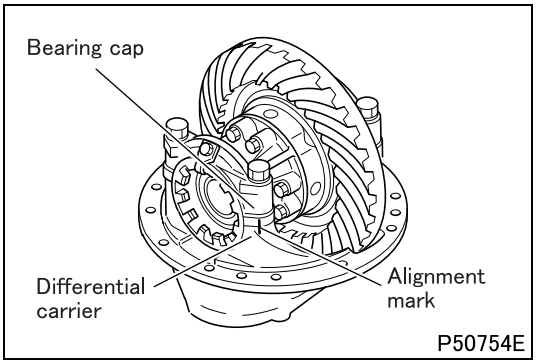

P50754E

■ **Alignment marks: Bearing cap and differential carrier**

- Put alignment marks on the bearing cap and differential carrier for correct identification of right and left parts.

◆Removal procedure◆

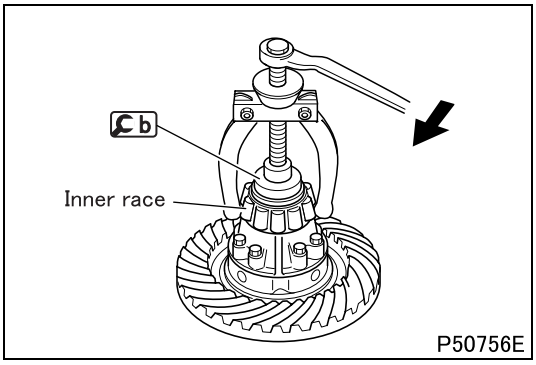

P50756E

■ **Removal: Side bearing inner race**

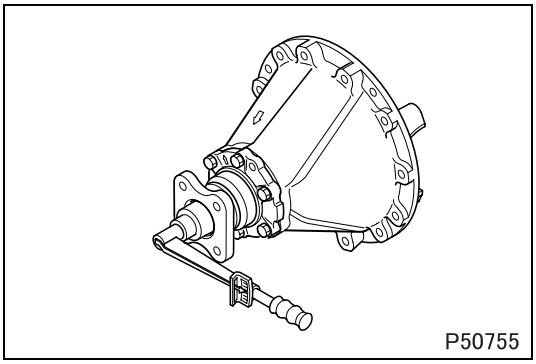
P50755

■ **Inspection: Starting torque of pinion bearing**

- After removing the differential, measure the starting torque of the pinion bearing.

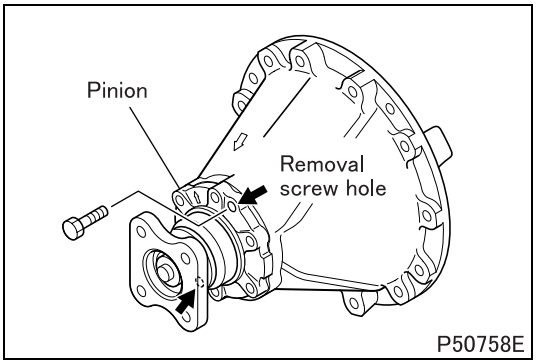

P50758E

■ **Removal: Pinion**

- Screw two bolts evenly into the pinion removal screw holes to remove the pinion.

◆Adjustment procedure◆

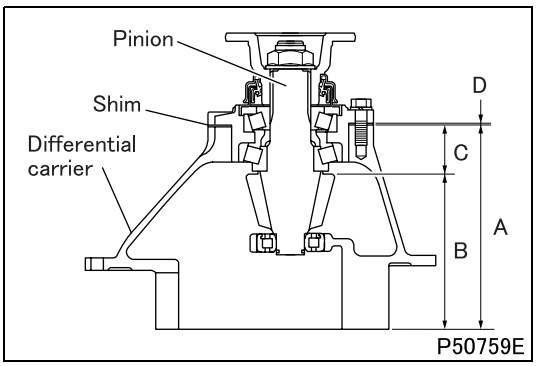

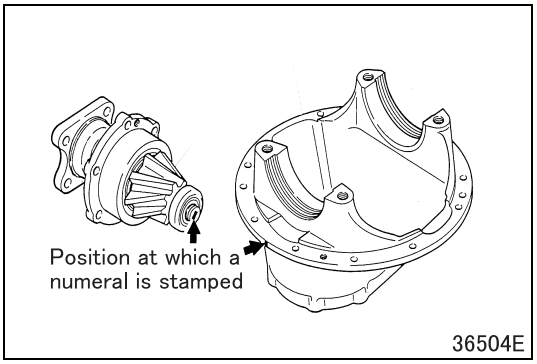

■ **Adjustment: Reduction pinion**

- Perform the following steps to adjust A, B and C within the specified dimensions.
- Calculate shim thickness D by using the following formula based on the machining error data stamped on pinion assembly and differential carrier.
- Formula:
  D = 0.5 mm {0.020 in.} – a + b + c
  a = Deviation from standard dimension A
  b = Deviation from standard dimension B
  c = Deviation from standard dimension C

Unit: mm {in.}

Location	Standard dimension	How to calculate deviation
Shim thickness	0.5 {0.020}	–
A	203 {7.99}	A numeral, multiplied by 100, is stamped on the outer periphery of the flange of the differential carrier.
B	157 {0.18}	A numeral is stamped on the top of the pinion assembly.
C	46.5 {1.8}	Measure deviation from dimension C using a dial gauge. Taking measurement is usually not feasible and assume a value from 0 to 0.2 mm.

- Select a shim based on shim thickness D.
  Thickness of shims available
  0.1 mm {0.0039 in.}, 0.2 mm {0.0079 in.} (two thickness)

◆Installation procedure◆

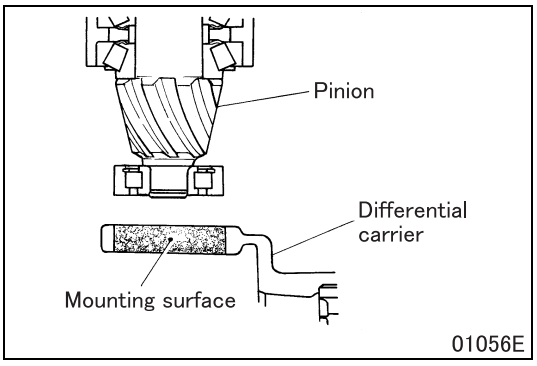

■ **Installation: Reduction pinion**

- Apply sealant to the pilot bearing mounting surface of the differential carrier.

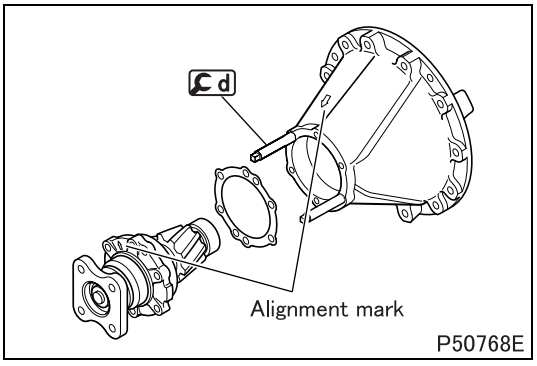

- Aligning the embossed alignment mark on the bearing retainer of the pinion assembly with that on the differential carrier, mount the pinion assembly.

CAUTION ⚠

- **Leave for 30 minutes to 2 hours after installation to let the sealant harden.**
- **Wait at least three hours or, if feasible 24 hours, before running the vehicle to let the sealant harden.**

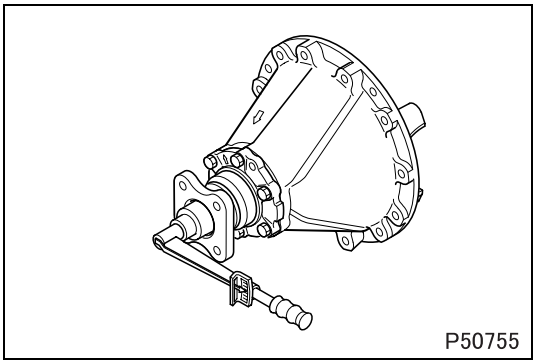
P50755

■ **Inspection: Starting torque of pinion bearing**

- After installing the pinion, measure the starting torque of the pinion bearing.
- If the measured value deviates from the standard value, adjust.

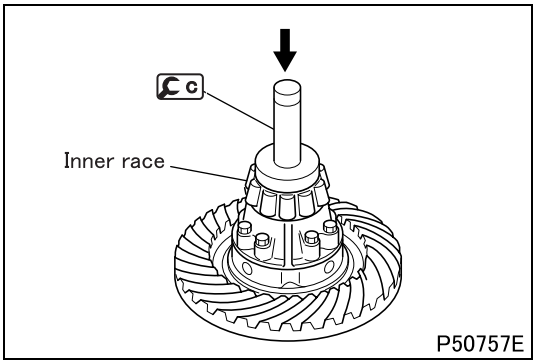

P50757E

■ **Installation: Side bearing inner race**

◆Work after installation◆

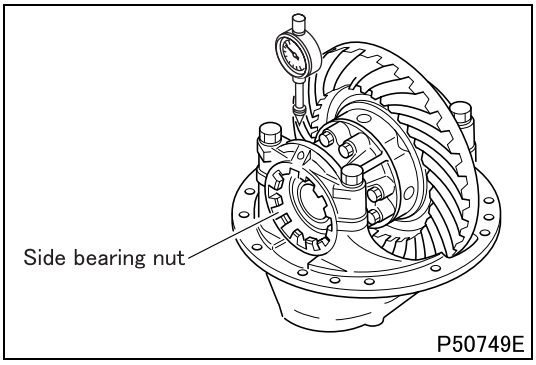

P50749E

■ **Adjustment: Backlash between reduction gear and reduction pinion**

- Adjust backlash with the side bearing nut, using care not to allow the side bearing starting torque to change.

CAUTION ⚠

- **When one side bearing nut is loosened, be sure to tighten the other one the same amount to prevent the side bearing starting torque from changing.**

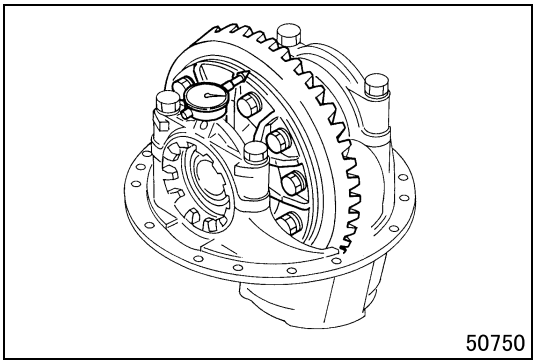
50750

■ **Inspection: Wobble at back face of reduction gear**

- Measure wobble at the illustrated position of the reduction gear.
- If the measured value deviates from the standard value, replace the reduction gear and reduction pinion of the differential as a set.

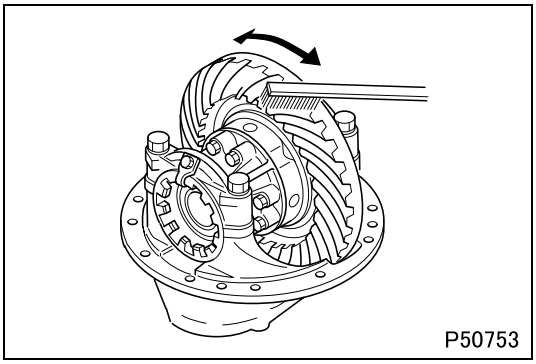
P50753

■ **Inspection: Tooth contact of reduction gear**

[Inspection]

- Apply red lead to three to four teeth at three equally spaced points of the reduction gear.
- Turn the reduction gear several times to check for tooth contact.
- Adjust tooth contact if it is remarkably offset.

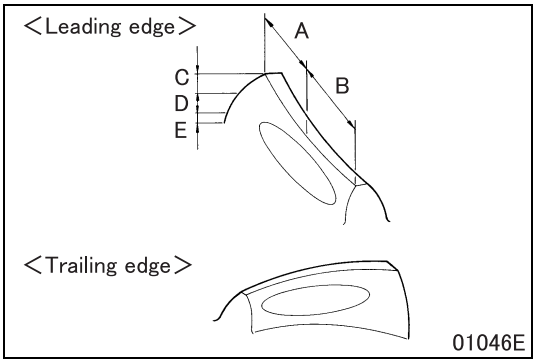

● **Correct tooth contact at no load**

<Reduction Gear>

A: Heel
B: Toe
C: Face
D: Flank
E: Clearance

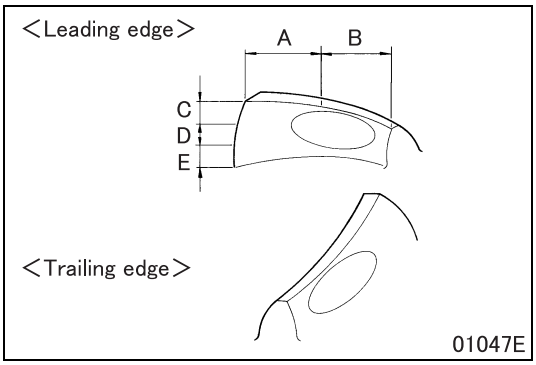

<Reduction Pinion>

A: Heel
B: Toe
C: Face
D: Flank
E: Clearance

Maintenance item			Assembly standards
At no load	Tooth contact position	Lengthwise direction of tooth	From center towards toe
		Vertical direction	From center towards top of tooth for reduction gear and center for reduction pinion
	Tooth contact shape	Length	Approximately 50 to 70% of tooth width
		Width	Approximately 50 to 70% of tooth depth
	Degree of tooth contact		It becomes weaker as it nears tooth root and tooth tip

NOTE

- **When tooth contact is near the toe at no load, it becomes middle area contact at load.**

[Adjustment]

- Adjust by backlash between reduction gear and reduction pinion (to be adjusted with the side bearing nut) and addition or reduction of rear bearing shims.

CAUTION ⚠

- **Make sure you replace as a reduction gear set (reduction gear and reduction pinion), when you replace the gear because of excessive teeth wear.**

	Method of adjustment	Moving direction	
Tooth contact by addition or reduction of shims	Advance reduction pinion to reduction gear (shims are reduced) 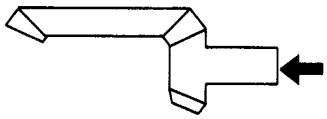 55497	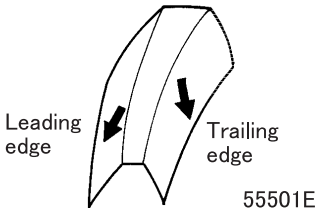 55501E	Tooth contact moves towards tooth root
	Retard reduction pinion from reduction gear (shims are added) 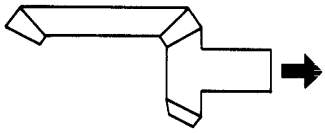 55498	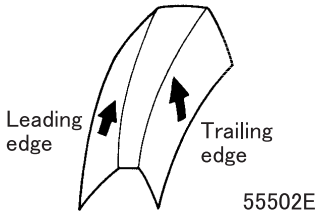 55502E	Tooth contact moves towards tooth tip
Tooth contact by adjustment with side bearing nut	Advance reduction gear to reduction pinion center (less backlash) 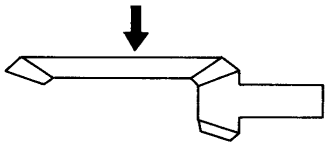 55499	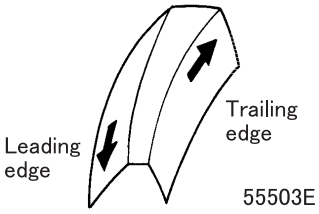 55503E	Tooth contact moves in lengthwise direction of tooth Leading edge: Nearer to toe and slightly nearer to root of tooth Trailing edge: Nearer to heel and slightly nearer to top of tooth
	Retard reduction gear from reduction pinion center (more backlash) 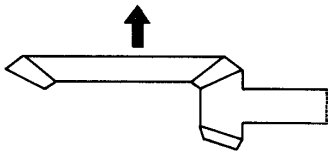 55500	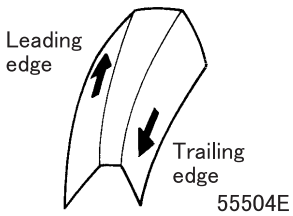 55504E	Tooth contact moves in lengthwise direction of tooth Leading edge: Nearer to heel and slightly nearer to top of tooth Trailing edge: Nearer to toe and slightly nearer to root of tooth

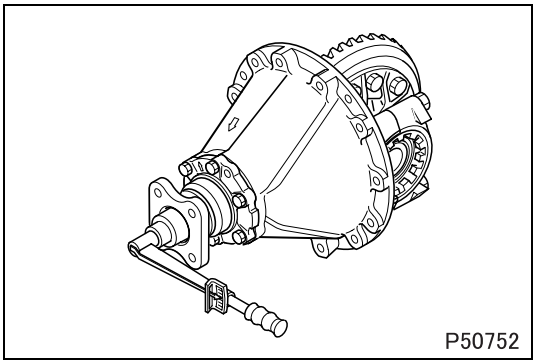
P50752

■ **Inspection: Starting torque of side bearing**

[Inspection]

- Measure starting torque of the pinion assembly using a torque wrench and calculate the starting torque of the side bearing using the following formula.
  (Total starting torque – Pinion bearing starting torque (See later section.)) × Final ratio = Side bearing starting torque

[Adjustment]

- Adjust by means of the right- and left-hand adjusting screws.

CAUTION ⚠

- **Always adjust both adjusting screws by the same amount.**
- **The starting torque must be adjusted without causing the backlash between the reduction gear and reduction pinion out of the standard value.**

Differential

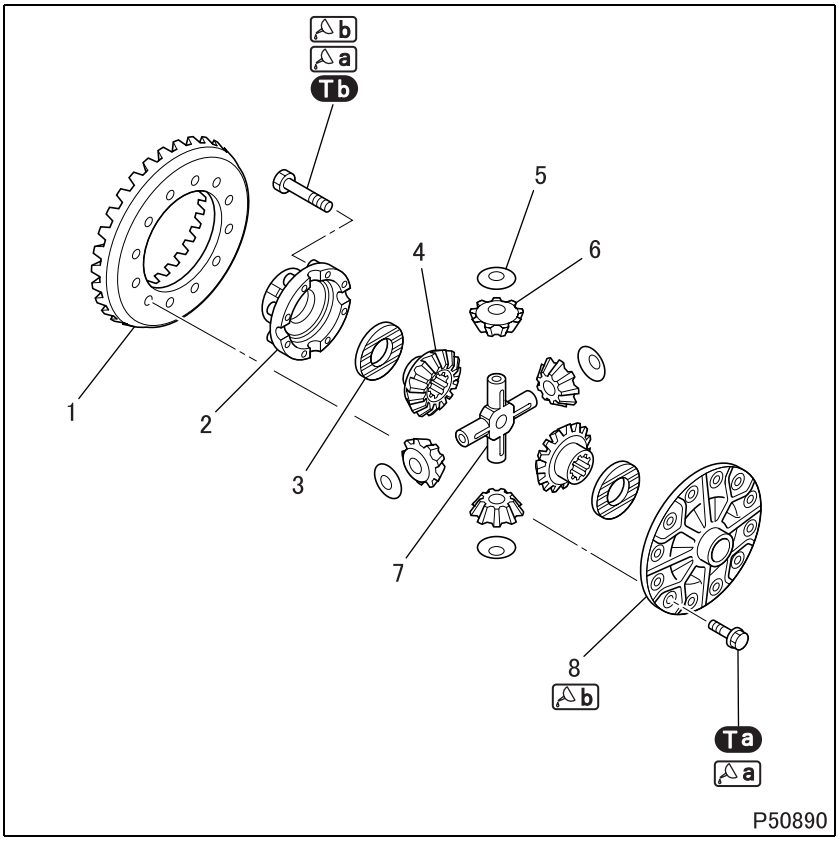

● Disassembly sequence

1 Reduction gear
2 Differential case RH
3 Side gear washer
4 Side gear
5 Pinion washer
6 Differential pinion
7 Pinion spider
8 Differential case LH

CAUTION ⚠

- **Be sure to replace the differential case RH and the differential case LH as a differential case set.**
- **Be sure to replace the side gear and the differential pinion as a side gear set.**

● Assembly sequence

Follow the disassembly sequence in reverse.

Service standards (Unit: mm {in.})

Location	Maintenance item	Standard value	Limit	Remedy
4	Backlash between side gear and spline of axle shaft	0.05 to 0.15 {0.0020 to 0.0059}	0.5 {0.020}	Replace
4, 6	Backlash between side gear and differential pinion	0.15 to 0.20 {0.0059 to 0.0079}	0.5 {0.020}	Replace
6, 7	Clearance between differential pinion and pinion spider	0.17 to 0.27 {0.0067 to 0.011}	0.5 {0.020}	Replace

Tightening torque (Unit: N·m {ft.lbs, kgf·m})

Mark	Parts to be tightened	Tightening torque	Remarks
Ta	Bolt (reduction gear mounting)	166.6 to 225.4 {120 to 165, 17 to 23}	–
Tb	Bolt (differential case RH and differential case LH mounting)	83.3 to 112.7 {61 to 83, 8.5 to 11.5}	–

Lubricant and/or sealant

Mark	Points of application	Specified lubricant and/or sealant	Quantity
a	Entire bolt	Rust preventive	As required
b	Thread area of bolt	Loctite 271	As required
	Bolt tip of differential case LH		

◆Work before removal◆

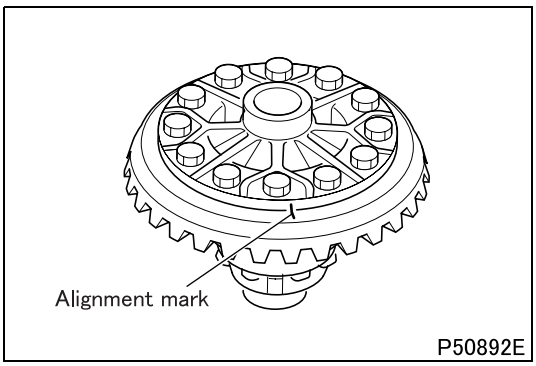

■ **Alignment marks: Reduction gear and differential case LH**

- Put alignment marks on the reduction gear and differential case LH.

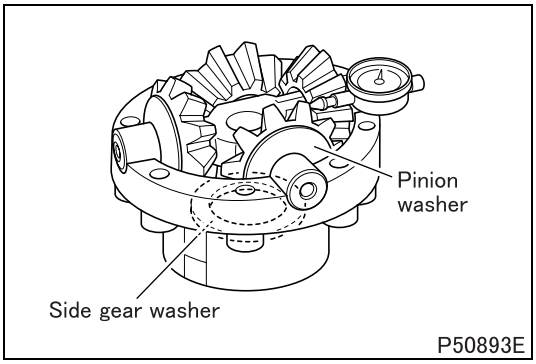

■ **Inspection: Backlash between side gear and differential pinion**

- If backlash is found faulty, thickness of the side gear washer and pinion washer is probably inappropriate.

◆Inspection procedure◆

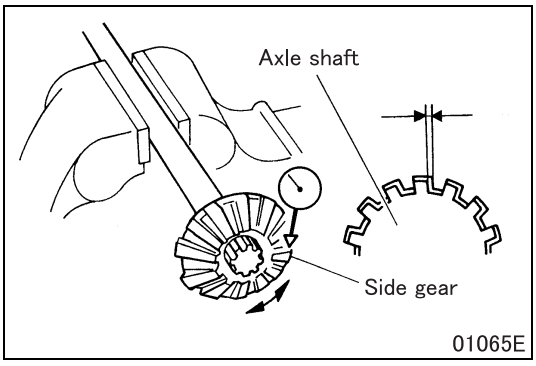

■ **Inspection: Backlash between side gear and axle shaft**

- If the measured value exceeds the limit, replace defective parts.

◆Installation procedure◆

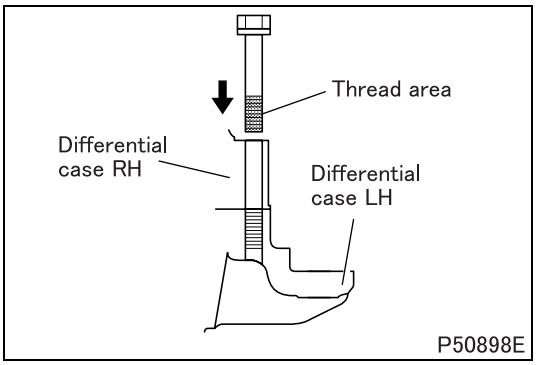

■ **Installation: Differential case RH and differential case LH**

- Apply rust preventive to the entire surface of the bolt. After applying it, blow off the excess rust preventive on the bolt by compressed air.
- Apply thread lock cement to the bolt threads.
- Tighten the bolt to the specified torque.

CAUTION ⚠

- **Make sure to apply rust preventive when tightening the bolt to the specified torque.**
- **Wait at least one hour after installation before actually running the vehicle to let the thread lock cement harden.**
- **Wait at least four hours after installation before operating the vehicle at full torque to let the thread lock cement harden.**

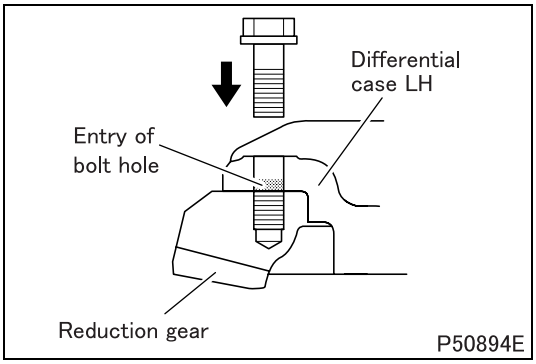

■ **Installation: Reduction gear and differential case LH**

- Apply rust preventive to the entire surface of the bolt. After applying it, blow off the excess rust preventive on the bolt by compressed air.
- Apply thread lock cement at the entry of bolt holes on differential case LH.
- Tighten the bolt to the specified torque.

CAUTION ⚠

- **Make sure to apply rust preventive when tightening the bolt to the specified torque.**
- **Wait at least one hour after installation before actually running the vehicle to let the thread lock cement harden.**
- **Wait at least four hours after installation before operating the vehicle at full torque to let the thread lock cement harden.**

◆Work after installation◆

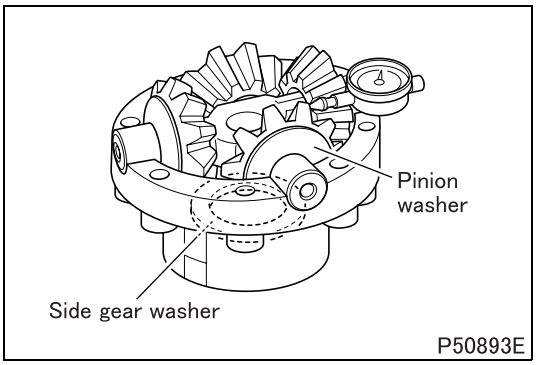

■ **Inspection: Backlash between side gear and differential pinion**

- If the measured value deviates from the standard value, replace the side gear washer and pinion washer.
  Thickness of side gear washers available
  3.0 mm {0.11 in.} (one thickness)
  Thickness of pinion washers available
  1.6 mm {0.063 in.} (one thickness)

CAUTION ⚠

- **Use side gear washers of the same thickness for the right and left sides.**
- **Use pinion washers of the same thickness at four locations.**

M E M O

Pinion

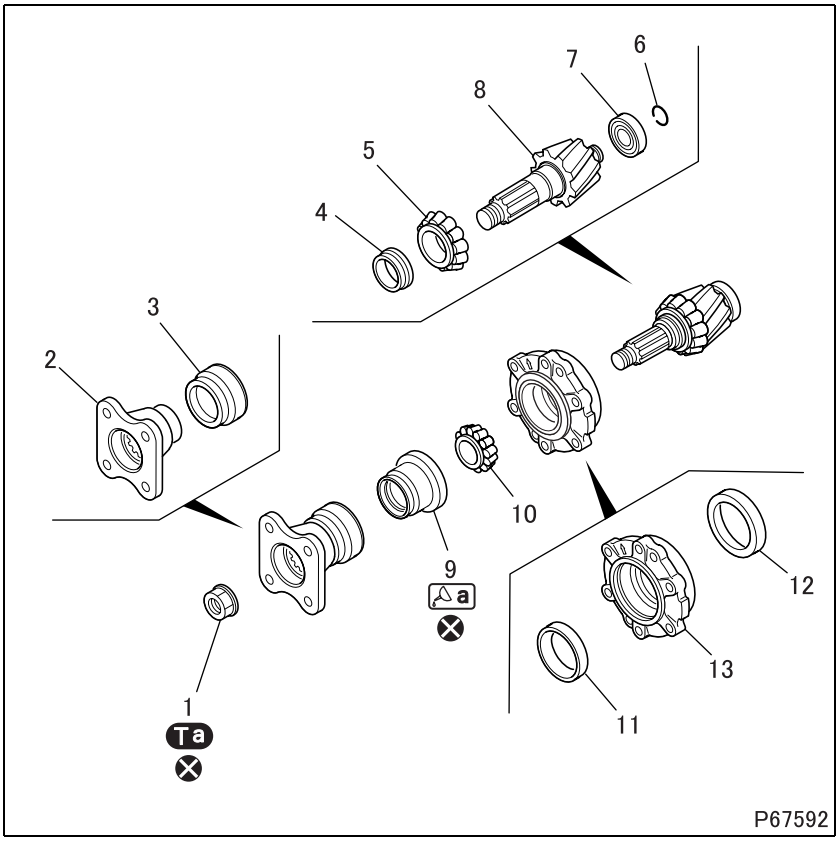

● Disassembly sequence

1 Lock nut
2 Companion flange
3 Dust cover
4 Collar
5 Rear bearing inner race
6 Lock ring
7 Pinion pilot bearing
8 Reduction pinion
9 Oil seal
10 Front bearing inner race
11 Front bearing outer race
12 Rear bearing outer race
13 Bearing retainer

⊗: Non-reusable parts

NOTE

- **Record the height of the collar to use it as reference at assembly.**

● Assembly sequence

Follow the disassembly sequence in reverse.

Service standards (Unit: mm {in.})

Location	Maintenance item		Standard value	Limit	Remedy
–	Starting torque of pinion bearing (tangential force at outer periphery point of bearing retainer)	When new bearing is used	2.0 to 2.9 N·m {1.4 to 2.2 ft.lbs, 0.20 to 0.30 kgf·m} (tangential force: 34 to 52 N {7.6 to 11 lbs., 3.5 to 5.3 kgf})	–	Adjust or replace
		When old bearing is reused	1.6 to 2.4 N·m {1.2 to 1.7 ft.lbs, 0.16 to 0.24 kgf·m} (tangential force: 27 to 41 N {6.1 to 9.2 lbs., 2.8 to 4.2 kgf})	–	Adjust or replace

Tightening torque (Unit: N·m {ft.lbs, kgf·m})

Mark	Parts to be tightened	Tightening torque	Remarks
Ta	Lock nut (companion flange mounting)	372.4 to 470.4 {275 to 345, 38 to 48}	–

Lubricant and/or sealant

Mark	Points of application	Specified lubricant and/or sealant	Quantity
a	Lip area of oil seal	Wheel bearing grease [NLGI No. 2 (Li soap)]	As required

Special tools (Unit: mm {in.})

Mark	Tool name and shape	Part No.	Application
a	Pinion bearing remover A: 0.5 {0.020}, B: 25.6 {1.00} 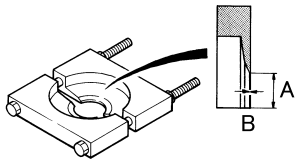 02956	MB999045	Removal of rear bearing inner race
b	Pinion bearing installer A: ϕ62 {2.44}, B: ϕ52 {2.05}, C: 125 {4.92} 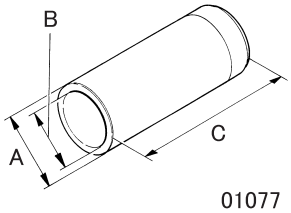 01077	MH061005	Installation of rear bearing inner race and front bearing inner race
c	Pinion pilot bearing installer A: ϕ45.2 {1.78}, B: ϕ39.2 {1.54} 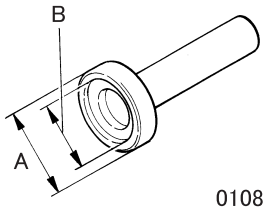 01081	MH061976	Installation of pinion pilot bearing
d	Oil seal installer A: ϕ112 {4.41}, B: ϕ88 {3.46} 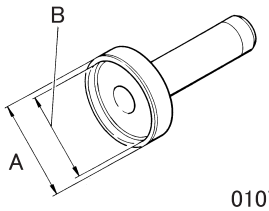 01076	MH061750	Installation of oil seal
e	Pinion bearing installer A: ϕ89 {3.50}, B: ϕ78 {3.07} 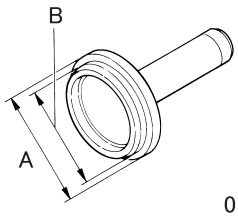 01078	MH061977	Installation of front bearing outer race
f	Pinion bearing installer A: ϕ99 {3.90}, B: ϕ88 {3.46} 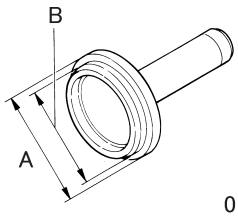 01078	MH061264	Installation of rear bearing outer race

◆Work before removal◆

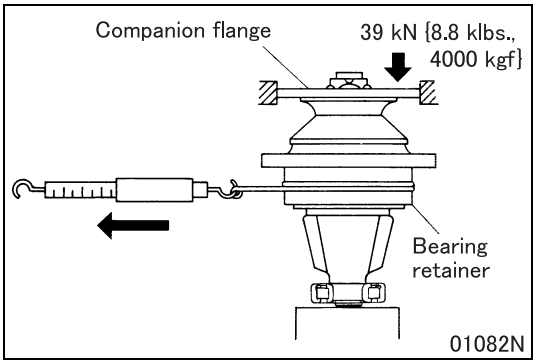

◆Removal procedure◆

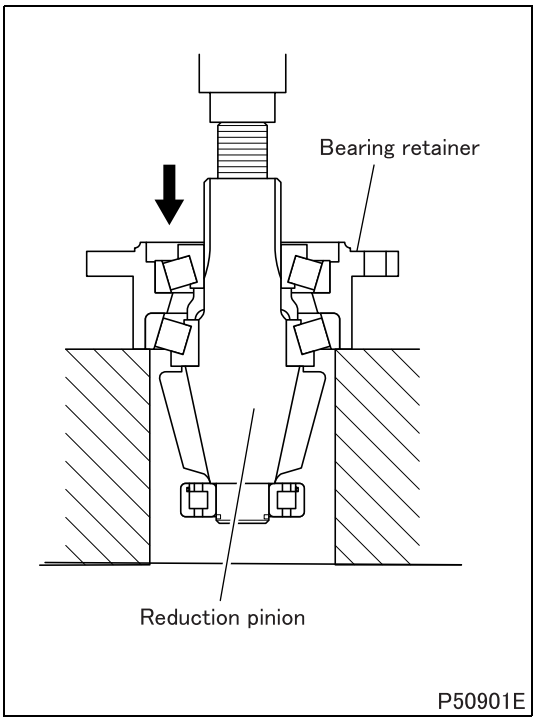

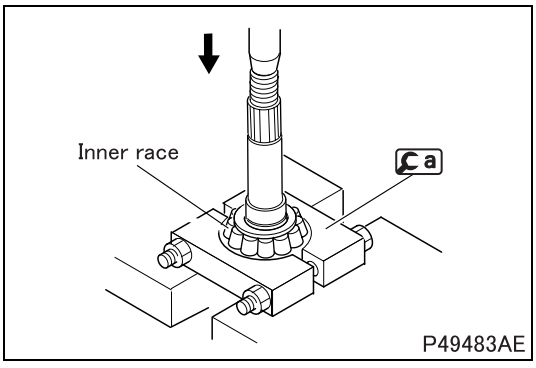

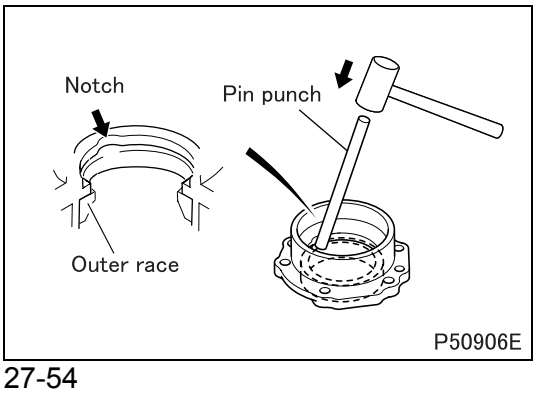

■ **Inspection: Starting torque of pinion bearing**

- Apply the specified load to the companion flange or tighten the lock nut to the specified torque.
- Measure the tangential force at outer periphery point of the bearing retainer using a spring balancer.

CAUTION ⚠

- **Securely fix the companion flange to measure.**

- If the measured tangential force is within the specified value, the starting torque conforms to the standard value.

■ **Removal: Reduction pinion**

■ **Removal: Rear bearing inner race**

■ **Removal: Front bearing outer race**

- Drive out the front bearing outer race by tapping evenly at three indented parts in the bearing retainer.

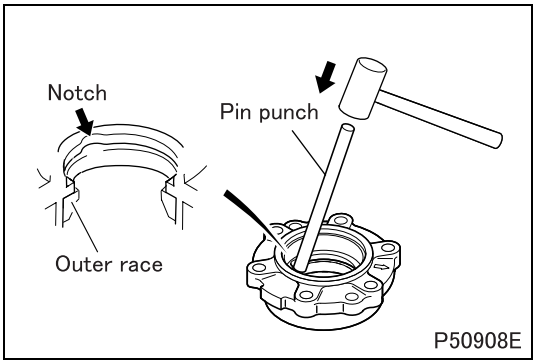

■ **Removal: Rear bearing outer race**

- Drive out the rear bearing outer race by tapping evenly at three indented parts in the bearing retainer.

◆**Installation procedure**◆

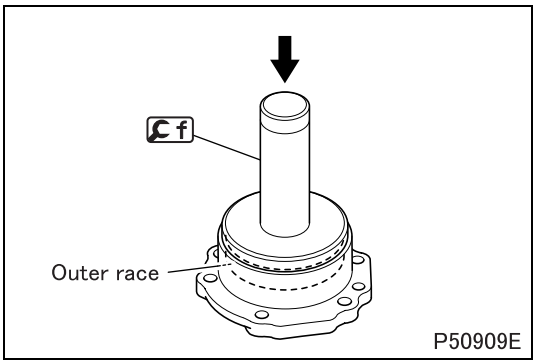

■ **Installation: Rear bearing outer race**

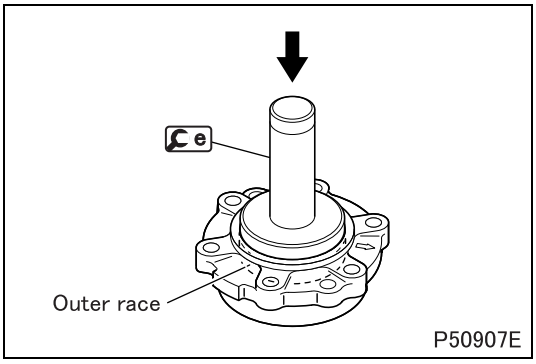

■ **Installation: Front bearing outer race**

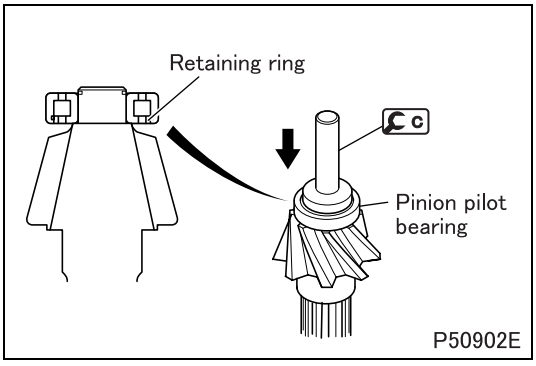

■ **Installation: Pinion pilot bearing**

- Install the pinion pilot bearing with its retaining ring placed on the gear.

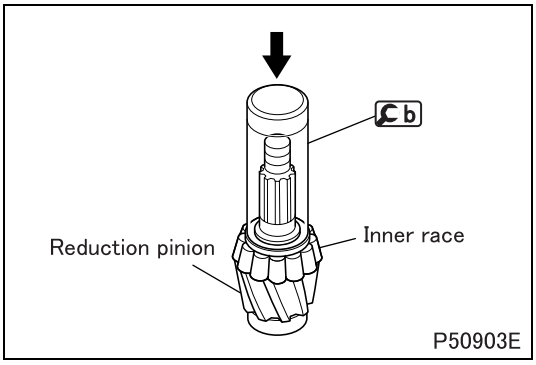

■ **Installation: Rear bearing inner race**

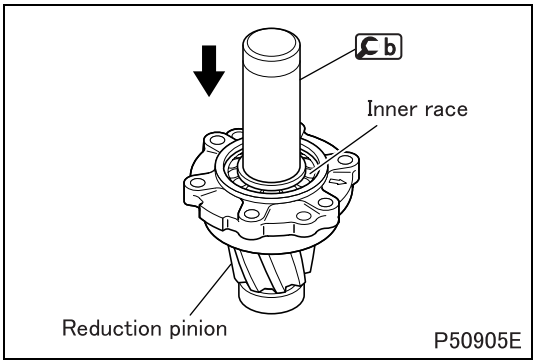

■ **Installation: Front bearing inner race**

- Install the front bearing inner race with the pinion assembled into the bearing retainer.

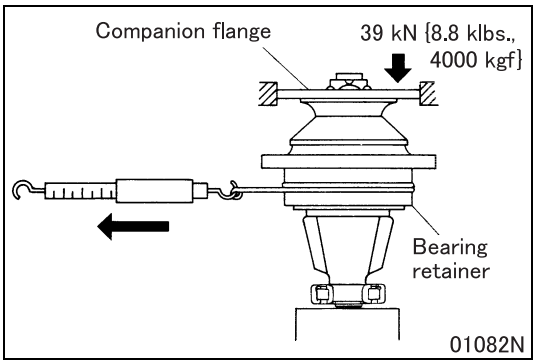

■ **Inspection: Starting torque of pinion bearing**

- Apply the specified load to the companion flange or tighten the lock nut to the specified torque.
- Measure the tangential force at outer periphery point of the bearing retainer using a spring balance.

CAUTION ⚠

- **Securely fix the companion flange to measure.**
- **Do not assemble the oil seal when measuring the tangential force.**

- If the measured tangential force is within the specified value, the starting torque conforms to the standard value.
- If the measured value deviates from the standard value, adjust by changing a collar.
  Thickness of collars available
  15.600 to 16.200 mm {0.61 to 0.64 in.} (25 thickness in 0.025 mm {0.00098 in.} increments)

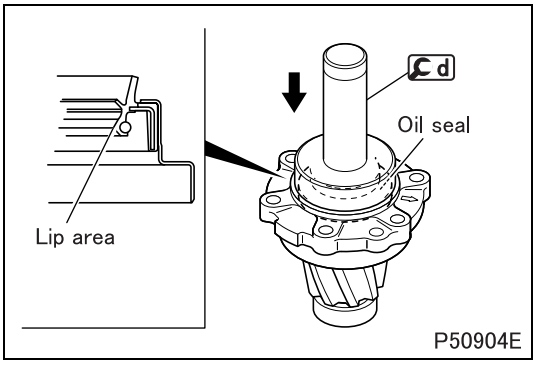

■ **Installation: Oil seal**

- Apply grease to the lip area of the oil seal and install it on the bearing retainer in the illustrated direction.

M E M O

LSD (Limited Slip Differential)

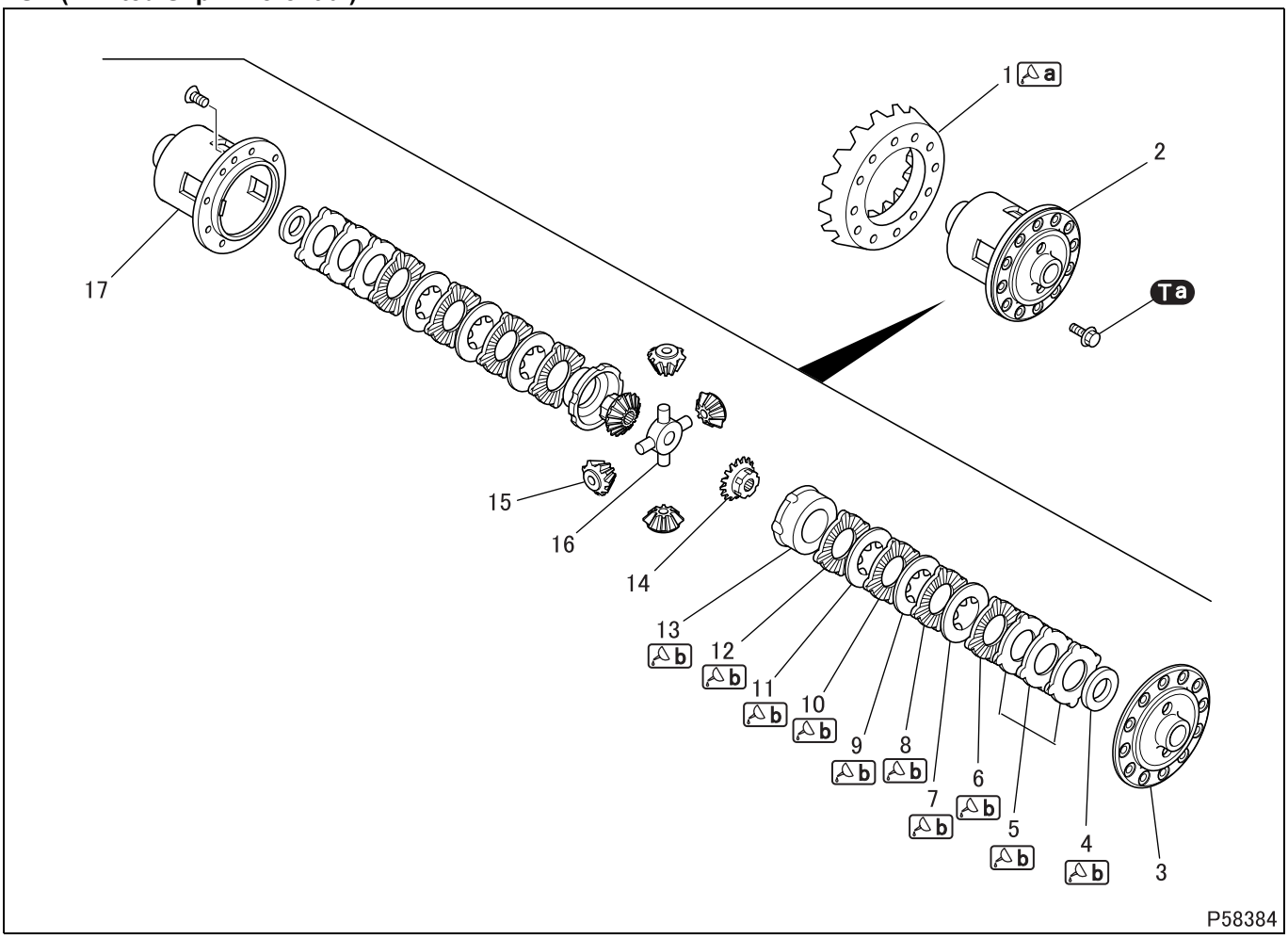

● **Disassembly sequence**

1 Reduction gear
2 LSD (Limited Slip Differential)
3 Differential case LH
4 Side gear washer
5 Spring plate
6 Friction plate
7 Friction disc
8 Friction plate
9 Friction disc
10 Friction plate
11 Friction disc
12 Friction plate
13 Pressure ring
14 Side gear
15 Differential pinion
16 Pinion spider
17 Differential case RH

CAUTION ⚠

- **Make sure to replace the side gear and the differential pinion as a side gear set.**

● **Assembly sequence**

Follow the disassembly sequence in reverse.

Service standards (Unit: mm {in.})

Location	Maintenance item			Standard value	Limit	Remedy
2	LSD	Rotation torque of clutch plate	When new clutch plate is assembled	201 to 298 N·m {150 to 220 ft.lbs, 15 to 27 kgf·m}	–	Replace
			When old clutch plate is reassembled	117 to 298 N·m {86 to 220 ft.lbs, 19 to 27 kgf·m}	–	
		Clearance in side gear axial direction		0.05 to 0.20 {0.0020 to 0.0079}	–	
		Clearance in differential case axial direction		0.05 to 0.20 {0.0020 to 0.0079}	–	
4, 11 to 14	Difference in dimensions from side gear washer end face to pressure ring back face between right and left			0 to 0.05 {0 to 0.0020}	–	Replace
7 to 10	Friction disc and friction plate		Distortion	–	0.08 {0.0031}	Replace
			Wear	–	0.1 {0.0039}	
			Difference in thickness of right and left combination	0 to 0.05 {0 to 0.0020}	–	Adjust

Tightening torque (Unit: N·m {ft.lbs, kgf·m})

Mark	Parts to be tightened	Tightening torque	Remarks
Ta	Bolt (reduction gear mounting)	167 to 225 {120 to 165, 17 to 23}	–

Lubricant and/or sealant

Mark	Points of application	Specified lubricant and/or sealant	Quantity
a	Bolt threads of reduction gear	Loctite 271	As required
b	Each part	Limited slip differential oil API GL-5 SAE 90	As required

Special tools (Unit: mm {in.})

<table>
<tr><th>Mark</th><th>Tool name and shape</th><th>Part No.</th><th>Application</th></tr>
<tr><td>a</td><td>
Side gear holding tool set
<table>
<tr><th>D</th></tr>
<tr><td>20
{0.79}</td></tr>
</table>
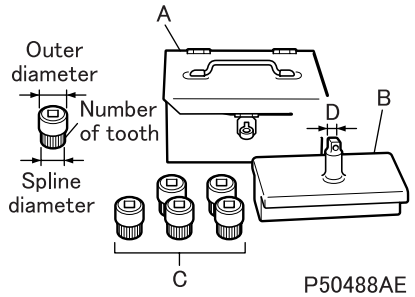

P50488AE
<table>
<tr><th colspan="2">Component</th><th>Number of tooth</th><th>Spline diameter</th><th>Part No.</th><th>Applied type</th></tr>
<tr><td>A</td><td>Gauge case</td><td></td><td></td><td>MB990551</td><td>–</td></tr>
<tr><td>B</td><td>Side gear holding base</td><td></td><td></td><td>MB999141</td><td>–</td></tr>
<tr><td rowspan="4">C</td><td>Side gear holding tool</td><td></td><td></td><td>–</td><td>–</td></tr>
<tr><td>Outer diameter</td><td>Number of tooth</td><td>Spline diameter</td><td>–</td><td>–</td></tr>
<tr><td>ϕ39
{1.54}</td><td>16
{0.63}</td><td>ϕ35.6
{1.40}</td><td>MH063422</td><td>–</td></tr>
<tr><td>ϕ42
{1.65}</td><td>18
{0.71}</td><td>ϕ39.6
{1.56}</td><td>MB999142</td><td>D033H</td></tr>
<tr><td>ϕ42
{1.65}</td><td>20
{0.79}</td><td>ϕ42
{1.65}</td><td>MH063423</td><td>D035H</td></tr>
</table>
</td><td>MB999140</td><td>Measure rotation torque of LSD clutch plate</td></tr>
</table>

◆Work before removal◆

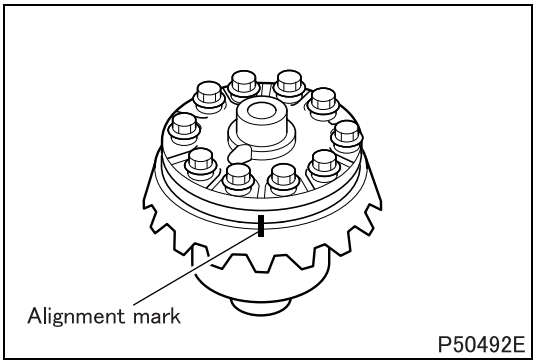

P50492E

■ **Alignment marks: Reduction gear and limited slip differential**

- Put alignment marks on the reduction gear and limited slip differential.

◆Inspection procedure◆

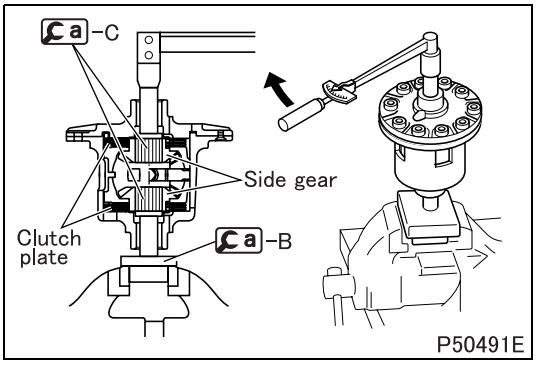

P50491E

■ **Inspection: Rotation torque of LSD clutch plate**

- After removing the reduction gear, carry out the following inspection.
- Measure the rotation torque to check for the friction force of the clutch plate.

NOTE

- **For measurement of rotation torque, rotate the side gears to sufficiently smooth their operation and measure the value during their rotation.**

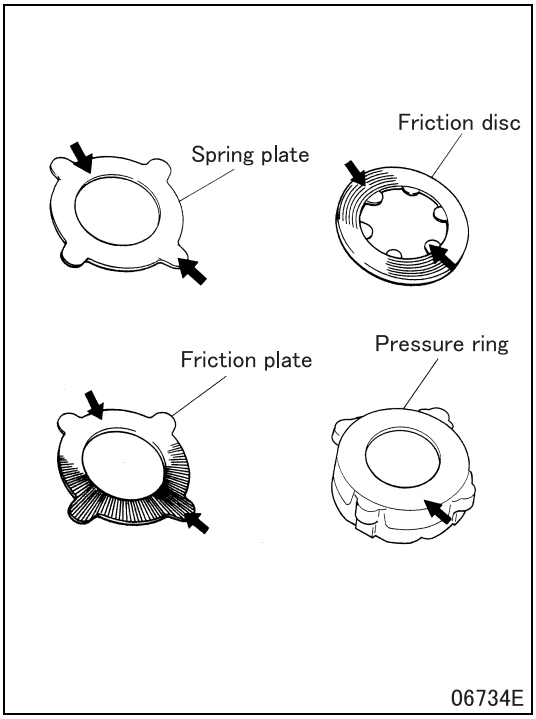

■ **Inspection: Limited slip differential**

(1) Inspection of contacting and sliding surfaces

- If heat discoloration and remarkable wear are found on friction surfaces and sliding surfaces of the spring plates, spring discs, friction discs and friction plates, replace defective parts.

NOTE

- **Strong contact on the inner periphery of friction surfaces is caused by the spring force of each plate and disc. Do not mistake that it is caused by abnormal wear.**

- If cracks and damage are found on protrusions on the inside and outside periphery of the spring plates, friction discs and friction plates, replace defective parts.
- If dents and damage are found on the friction surfaces and sliding surfaces of the pressure rings to friction discs, polish them with an oilstone, and lap and correct them with a compound on a surface plate.

NOTE

- **Strong contact on the inner periphery of friction surfaces is caused by the spring force of each plate and disc. Do not mistake that it is caused by abnormal wear.**
- Inspect contacting and sliding areas ← of the differential case LH, side gear washers, pressure rings, side gears, differential pinion, pinion spider and differential case RH, and correct burrs and dents with an oilstone.

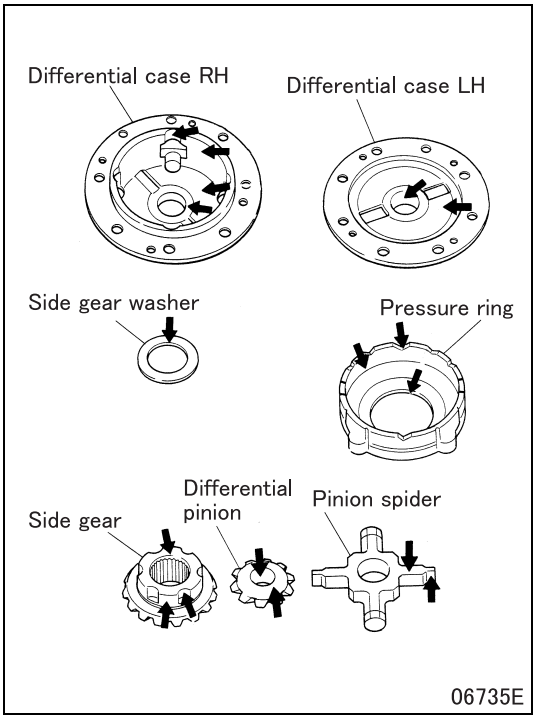

(2) Inspection of distortion

- Apply a dial gauge to the friction disc and friction plate on a surface plate and measure their distortion (flatness) while turning them. If the measured value exceeds the limit, replace.

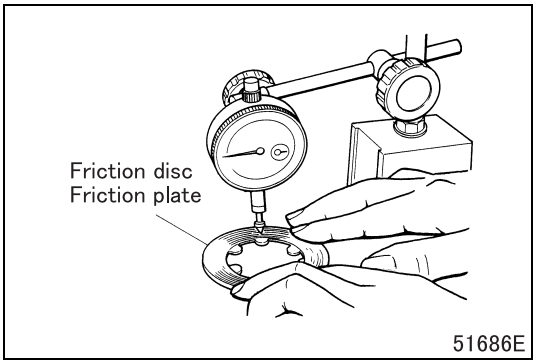

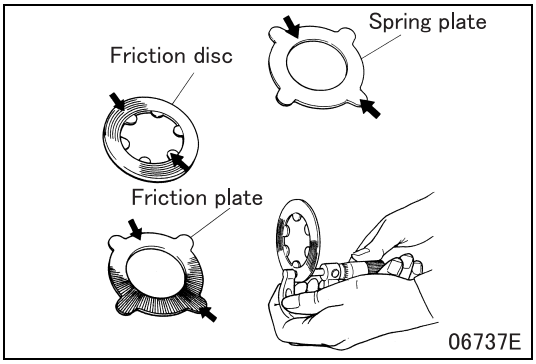

(3) Inspection of thickness

- Measure thickness of the friction surfaces and protrusions ⬅ of the spring plate, friction disc and friction plate, and find the difference. If it exceeds the limit, replace defective parts.

NOTE

- **Take measurement at several points for each part.**

◆Work before assembly◆

- Before assembling the limited slip differential, adjust the dimensional difference (friction force of clutch plate) in the axial direction and the clearance in the side gear axial direction, when assembling integral parts of the differential cases LH and RH, in the following procedure.

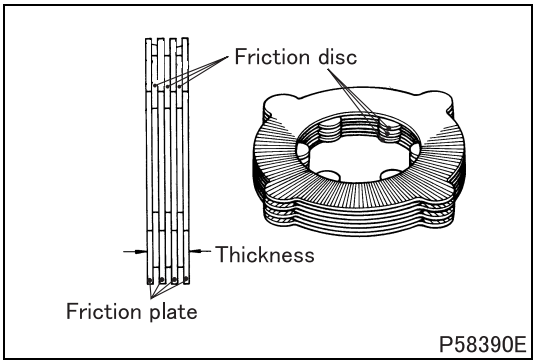

- Pile friction discs and friction plates as illustrated and measure thickness with a micrometer. Select the combination so that the difference in thickness between the right and left combination falls within the range of the standard value.
  Thickness of friction discs available
  1.9, 2.0, 2.1 mm {0.075, 0.079, 0.083 in.} (three sizes)
  Thickness of friction plates available
  2.0 mm {0.079 in.} (one size)

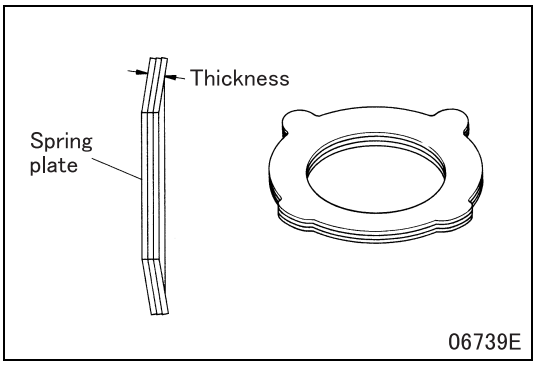

- Pile a spring plate and a spring disc as illustrated and measure thickness with a micrometer. Select the combination so that the difference in thickness between the right and left combination is as small as possible.
  Thickness of spring plates available
  2.0 mm {0.079 in.} (one size)

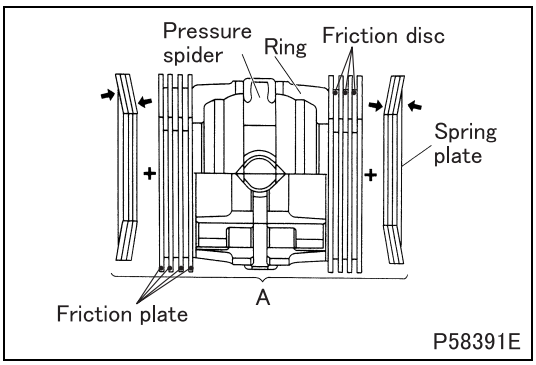

- Assemble the pressure rings, pinion spiders, friction discs, friction plates, spring plates and spring discs and measure overall width A with a micrometer.

NOTE

- **Measure the overall width with the V-shaped groove of the pressure ring pressed against the pinion spider from both sides to obtain secure contact.**

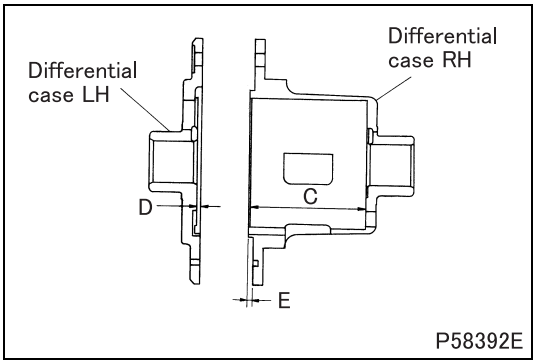

- Find dimension B between spring plate contact faces when the differential cases LH and RH are combined.
  B=C+D–E

- If overall width A measured in the previous item and the clearance (B-A) between the differential cases LH and RH deviate from the standard value, adjust by changing a friction plate.
  Thickness of friction plates available
  1.9, 2.0, 2.1 mm {0.075, 0.079, 0.083 in.} (three sizes)

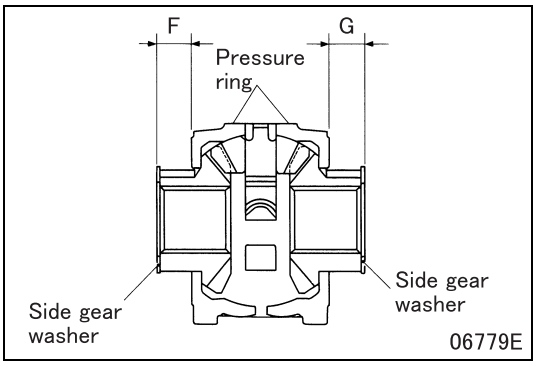

- After installing the side gear washers as illustrated, make sure that the difference between F and G dimensions from the back face of the pressure rings to the end face of the side gear washers falls within the range of the standard value.

NOTE

- **Measure the dimensions with the V-shaped groove of the pressure ring pressed against the pinion spider from both sides to obtain secure contact.**

- If the difference in dimension deviates from the standard value, adjust by changing the side gear washer.
  Thickness of side gear washers available
  1.5, 1.6, 1.7 mm {0.059, 0.063, 0.067 in.} (three sizes)

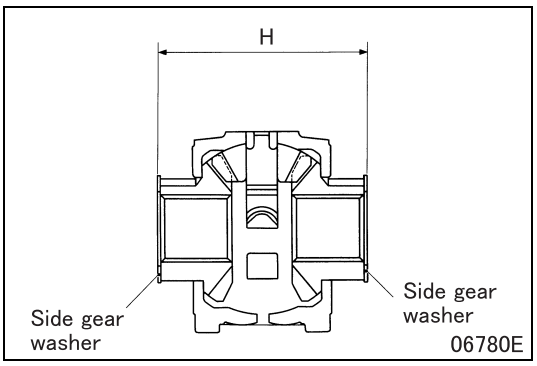

- Measure overall width H.

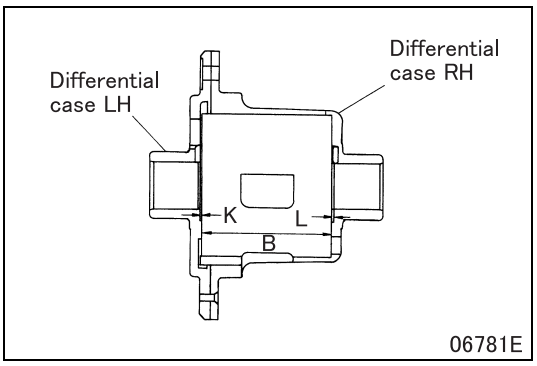

- Find dimension J between side gear washer contact faces when the differential cases LH and RH are combined.
  J=B+K+L

NOTE

- **For dimension B, refer to the difference between spring plate contact surfaces found in the previous item when the differential cases LH and RH are combined.**

- Check that clearance in the side gear axial direction is within the range of the standard value.
- If the clearance deviates from the standard value, adjust by changing the side gear washer.
  Thickness of side gear washer available
  1.5, 1.6, 1.7 mm {0.059, 0.063, 0.067 in.} (three sizes)

NOTE

- **Select side gear washers so that the right and left dimensional difference from the back face of the pressure rings to the end face of the side gear washers conforms to the standard value.**

◆Assembly procedure◆

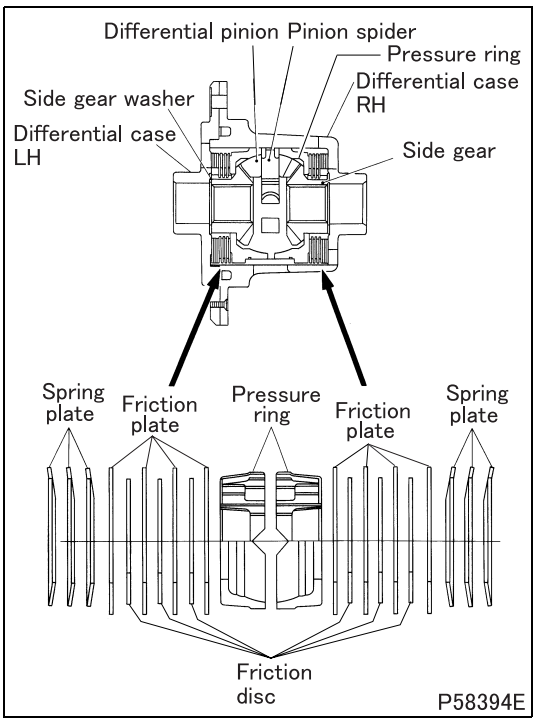

■ **Assembly: LSD (Limited Slip Differential)**

- Assemble each part into the differential case RH in the illustrated direction.

NOTE

- **Take care not to install the friction discs and friction plates in a wrong sequence and the spring plates in a wrong direction.**
- **When assembling, apply gear oil to each part. Especially, apply gear oil carefully to contact surfaces and sliding surfaces.**

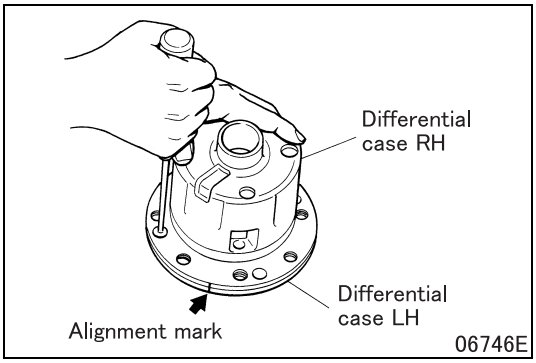

- Aligning the alignment mark (the same Arabic numeral) of the differential case LH with that of the differential case RH, tighten screws in the diagonal sequence gradually and evenly.

NOTE

- **If the differential cases LH and RH do not contact positively each other even after screws have been tightened fully, improperly assembled side gear washers and spring plates are suspected. In that case, reassemble these parts.**

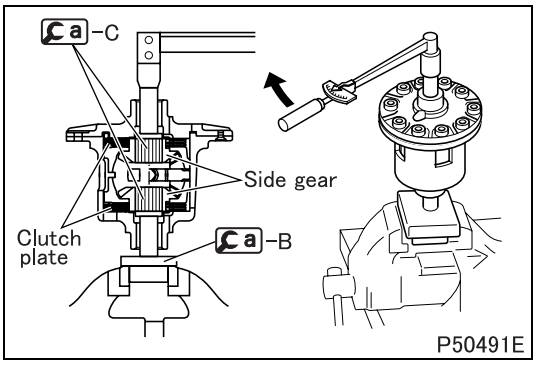

■ **Inspection: Rotation torque of limited slip differential clutch plate**

- After assembling LSD, carry out the following inspection.
- Measure the rotation torque to check for the friction force of the clutch plate.

NOTE

- **For measurement of rotation torque, rotate the side gears to sufficiently smooth their operation and measure the value during their rotation.**

- If the measured value deviates from the standard value, replace defective parts of the internal components.

Group 31

Wheel and Tire

Table of Contents

Back

Home

MITSUBISHI FUSO TRUCK OF AMERICA, Inc.

Pub.No.TWSE0713-31

INDEX

SPECIFICATIONS 31-2

TROUBLESHOOTING 31-3

WHEEL AND TIRE 31-4

SPECIFICATIONS

Tire size	Wheel type
215/85R16	16 × 6K-127
215/75R17.5	17.5 × 6.00-127
235/85R16	16 × 6K-135

- Tire pressures specified for each tire size are shown on the tire pressure label.

Symptoms / Possible causes			Tire tread wear										Reference Gr
			Both shoulders worn	Center worn	Outside worn	Inside worn	Worn in feather pattern from outside in	Worn in feather pattern from inside out	Worn in wave pattern	Worn in concave (one spot or more)	Worn in pit over the entire periphery	Worn in serration	
Overload			O										
Tire pressure		Too low	O						O	O	O	O	
		Too high		O									
Wheel alignment	Toe-in	Excessive			O		O						Gr26
		Insufficient				O							
	Camber	Excessive			O								
		Insufficient				O							
	Excessive toe-out					O		O					
	Multiple misalignment		O		O	O	O	O	O	O	O		
Knuckle arm bent					O	O	O	O					
Left and right tie-rods different in length							O						
Wheels out of balance									O	O	O	O	
Wheel bearing loose									O	O	O	O	Gr26, 27
Ball joint loose										O			Gr26
Tie-rod end loose										O			Gr37
Brake drum eccentrically mounted <Drum brake>										O	O		Gr26B, 27
Axle bent									O	O			Gr26, 27
Left and right wheels steered at improper angles												O	Gr26
Hard acceleration, braking, or steering												O	
Specific road surface conditions					O	O							

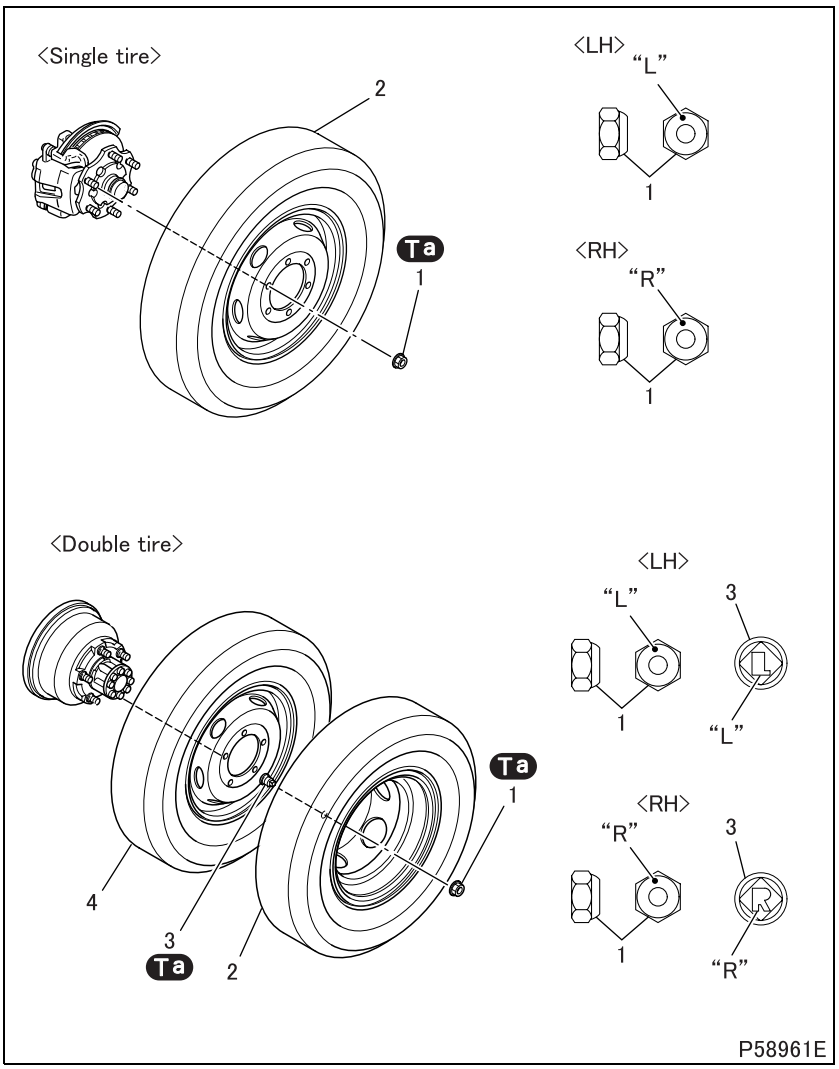

CAUTION ⚠

- **Use right-hand threaded wheel nuts marked "R" for right side wheels and left-hand threaded wheel nuts marked "L" for left side wheels.**

●Removal sequence

1 Wheel nut <Single tire>
Wheel nut (outer) <Double tire>
2 Tire (See later section.)
3 Wheel nut (inner) <Double tire>
4 Tire <Double tire>
(See later section.)

●Installation sequence

Follow the removal sequence in reverse.

CAUTION ⚠

- **The wheel nuts are designed to be tightened without any coating of grease. Never grease the wheel nuts. Even if tightened to the specified torques, greased wheel nuts can become loose.**

Service standards (Unit: mm {in.})

Location	Maintenance item	Standard value	Limit	Remedy
2, 4	Tire lateral runout (sideway deflection)	3.5 {0.14} or less	–	Correct or replace

Tightening torque (Unit: N·m {ft.lbs, kgf·m})

Mark	Parts to be tightened	Tightening torque	Remarks
Ta	Wheel nut	490 ± 49 {360 ± 36, 50 ± 5.0}	–

◆Inspection procedure◆

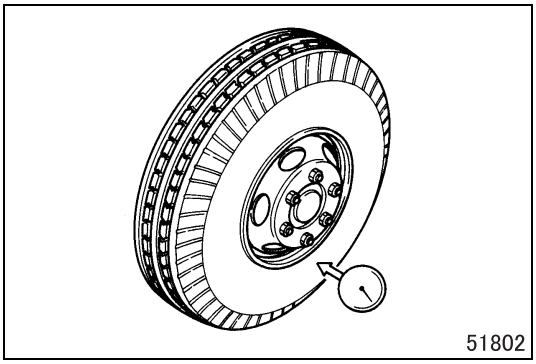

■ **Inspection: Tire**

- Measure the tire for lateral runout (sideway deflection).
- If the measured value is equal to or exceeds the standard value, correct as follows.

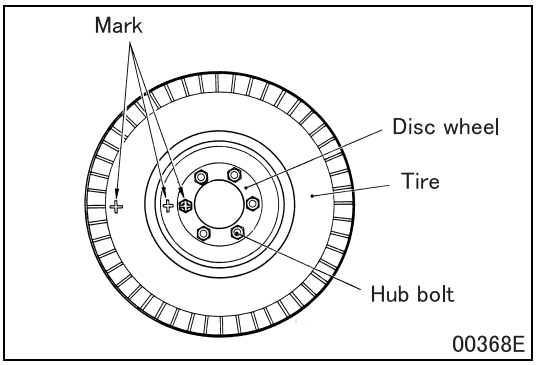

■ **Correction: Tire**

- Mark the tire, disc wheel, and one of the hub bolts in the illustrated locations.
- Remove the tire from the disc wheel.

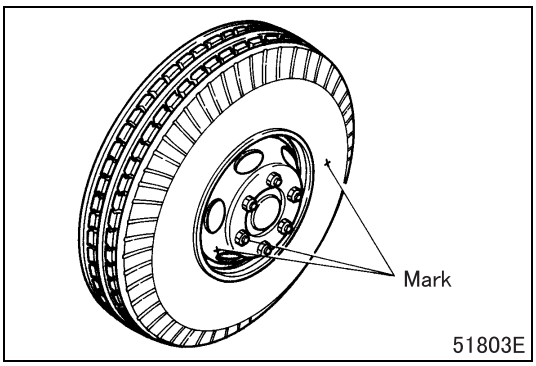

- Measure the disc wheel for lateral runout.
- If the disc wheel's maximum runout is located near the mark on the wheel, install the tire such that the mark on the tire is 180° away from the mark on the disc wheel.
- Measure the tire again for lateral runout.
- If the measured value still does not conform to the standard value, replace the tire.

◆Installation procedure◆

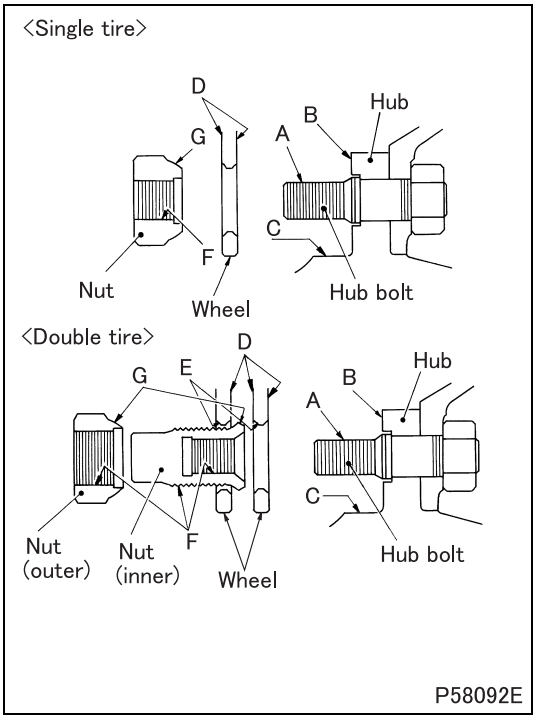

■ Installation: Tire

- To prevent hardware and parts from becoming loose and/or damaged, thoroughly clean the following areas, removing rust, dirt, paint and foreign matter, before installing the tire.
  - A: Threaded portion of hub bolt
  - B: Wheel mounting surface of hub
  - C: Wheel alignment area of hub
  - D: Mating surfaces of disc wheel
  - E: Wheel nut mounting surface of disc wheel
  - F: Threaded portion of wheel nut
  - G: Spherical portion of wheel nut

Tire

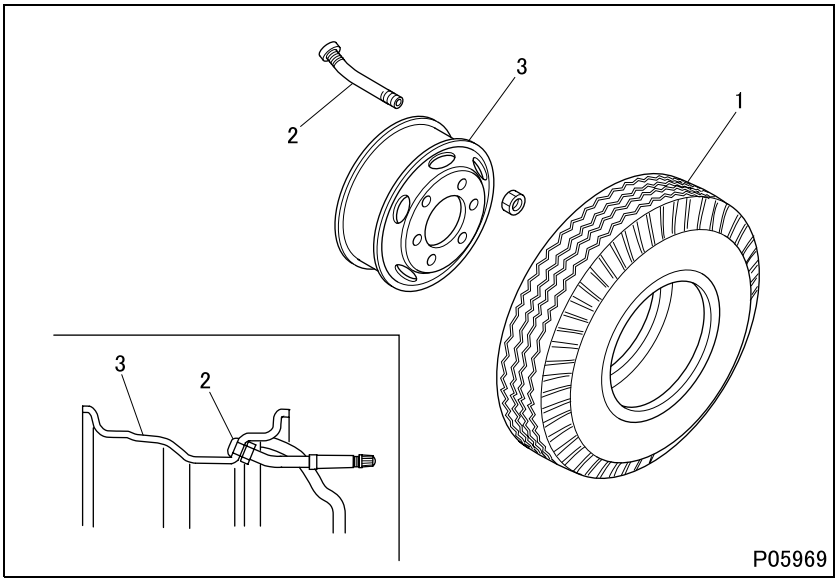

●Disassembly sequence

1 Tire
2 Air valve
3 Disc wheel

●Assembly sequence

Follow the disassembly sequence in reverse.

Service standards (Unit: mm {in.})

Location	Maintenance item		Standard value	Limit	Remedy
–	Tire assembly static unbalance tolerance		70 g {2.47 oz} or less	–	Correct
3	Disc wheel	Flatness (at hub surface)	0.3 {0.012} or less	–	Replace
		Lateral runout (sideway deflection)	1.5 {0.059} or less	–	
		Radial runout (vertical deflection)	1.5 {0.059} or less	–	

◆Inspection procedure◆

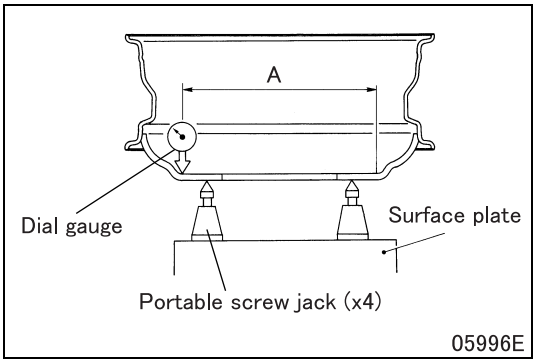

■ **Inspection: Disc wheel**

(1) Flatness

- Using a dial gauge, measure the disc wheel for flatness (difference between the maximum and minimum values measured) at specified distance A from the center of the wheel, at 5 locations for 5-stud units and 6 locations for 6-stud units that are equally divided around the specified circumference on the wheel.
  A: ϕ170 mm, 270 mm {6.69, 10.6 in.} 16 × 6K-127
  16 × 6K-135
  ϕ175 mm, 275 mm {6.89, 10.8 in.} 17.5 × 6.00-127
- If the measured flatness is equal to or exceeds the specified value, replace the disc wheel.

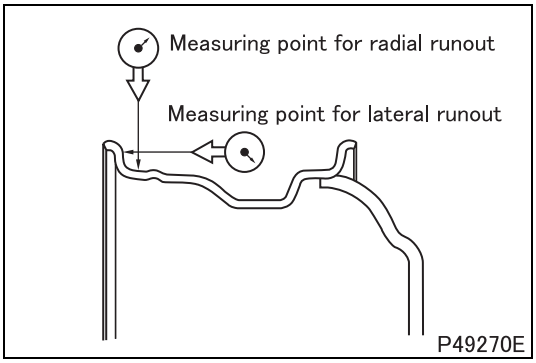

(2) Runout

- If the measured value is equal to or exceeds the standard value, replace the disc wheel.

◆Installation procedure◆

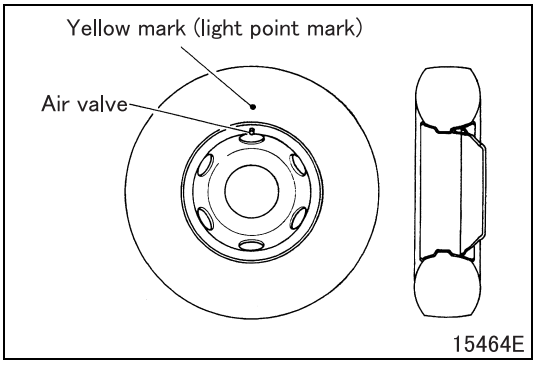

■ **Installation: Tire**

<Tire with no red mark>

- Install the tire such that the yellow mark (light point mark) on the tire is aligned with the air valve on the disc wheel.

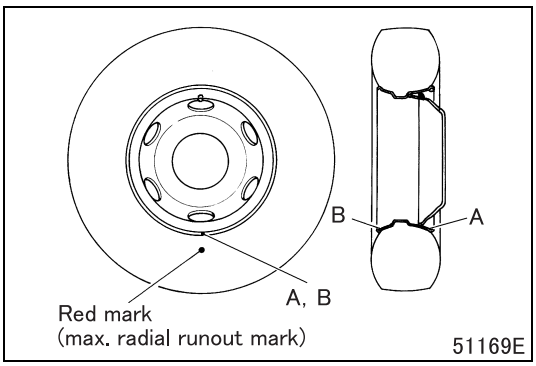

<Tire with red mark>

- Install the tire such that the red mark (max. radial runout mark) on the tire is aligned with mark A or B on the disc wheel.
  A: Front face of disc wheel <All wheels except 17.5-inch wheel>
  B: Back face of disc wheel <17.5-inch wheel>

◆Installation procedure◆

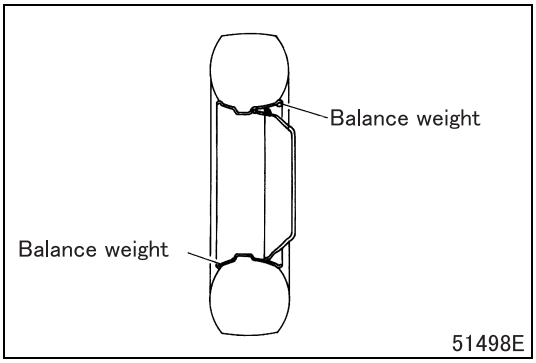

■ **Installation: Balance weight**

- Install balance weights onto the front and back sides of the disc of the tires listed in the table below. Ensure that the static unbalance of the tire being balanced remains within the standard value.

Tires being balanced	Vehicle model
Tires on front axle	FE
Tires on front axle, tires on rear axle	FG

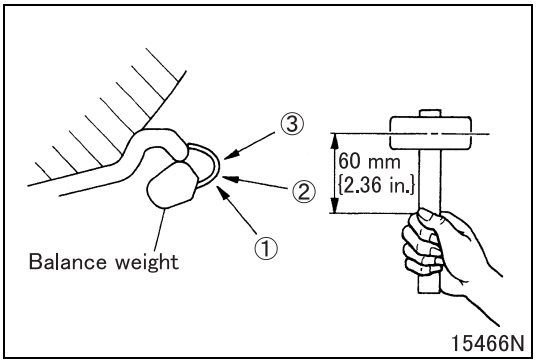

- Use a 1-pound resin hammer to drive balance weights into position.
- To install a balance weight, tap the clip of the weight in the center at 1, 2 and 3 in that order.

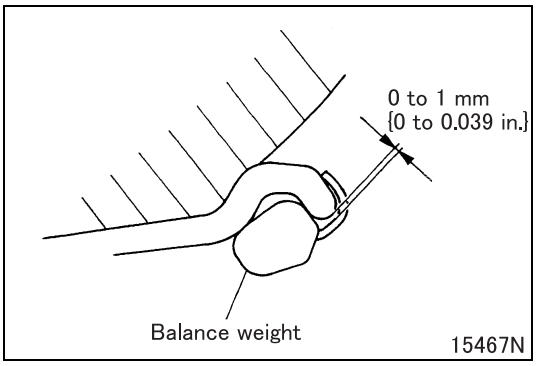

- Leave a clearance of approx. 0 to 1 mm {0 to 0.039 in.} between the clip and the disc wheel. Ensure that the balance weight is not loose after installation.
- Do not use a balance weight that has been improperly tapped or dropped to the floor during installation attempt.
- When 2 weights are being installed, these weights should be as much equal to each other as possible in weight. Also remember that the center point between the weights will become the support point for a balancer.

Group 33

Front Suspension

Table of Contents

Back

Home

MITSUBISHI FUSO TRUCK OF AMERICA, Inc.

Pub.No.TWSE0713-33

INDEX

STRUCTURE AND OPERATION
1. Front Suspension Elements 33-2

TROUBLESHOOTING 33-3

STABILIZER 33-4

SHOCK ABSORBER
<FE> 33-6
<FG> 33-8

LEAF SPRING
<FE> 33-10
<FG> 33-14

1. Front Suspension Elements

<FE>

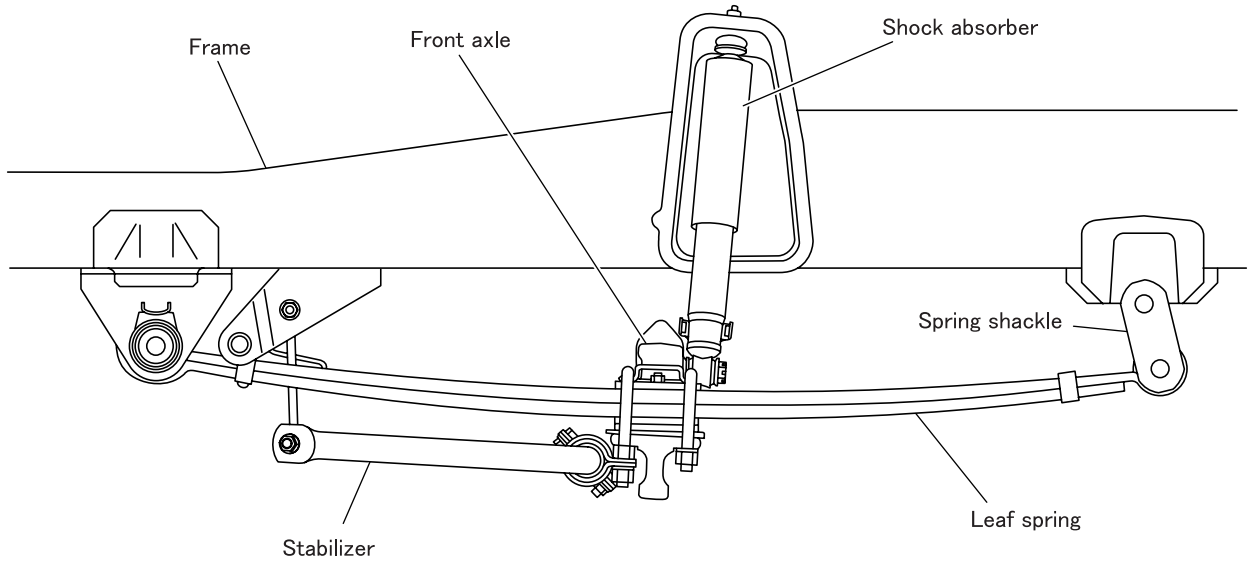

P103186E

<FG>

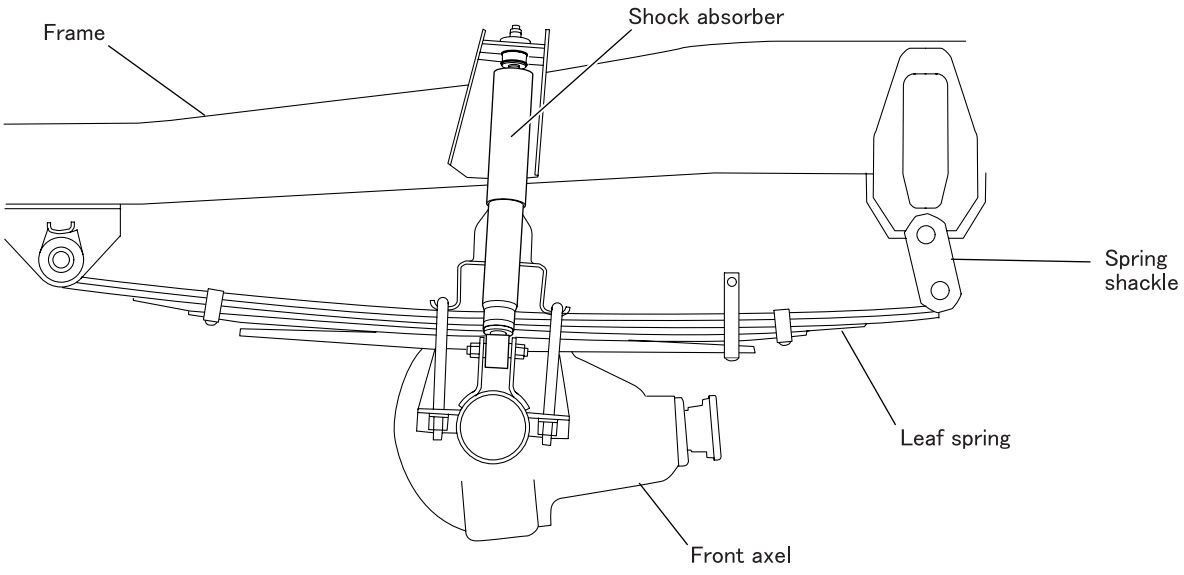

P59142E

- The front suspensions shown above both use a spring shackle connected to the rear end of the leaf spring (shackle-link type suspension).
- The stabilizer prevents the vehicle from pitching, keeping it parallel with the ground.

Symptoms / Possible causes		Feels as if floating	Tends to be noisy	Road bumps/pits received as shocks	Heavy rolling	Cyclical shocks from underneath	Vehicle tilted	Poor linearity	Reference Gr
Deformed stabilizer bar or link					O				
Shock absorber	Substantial loss of oil and damping capacity	O							
	Rubber bushing worn		O						
	Loose fitting		O						
Leaf spring	Cracks or other damage			O			O		
	Broken		O				O		
	Loose U-bolt		O				O		
	Spring bushing worn		O				O		
Tire	Uneven wear				O			O	
	Tire and wheel needs balancing					O		O	Gr31
	Excessive tire pressure			O					
Wheels out of alignment								O	Gr26

STABILIZER

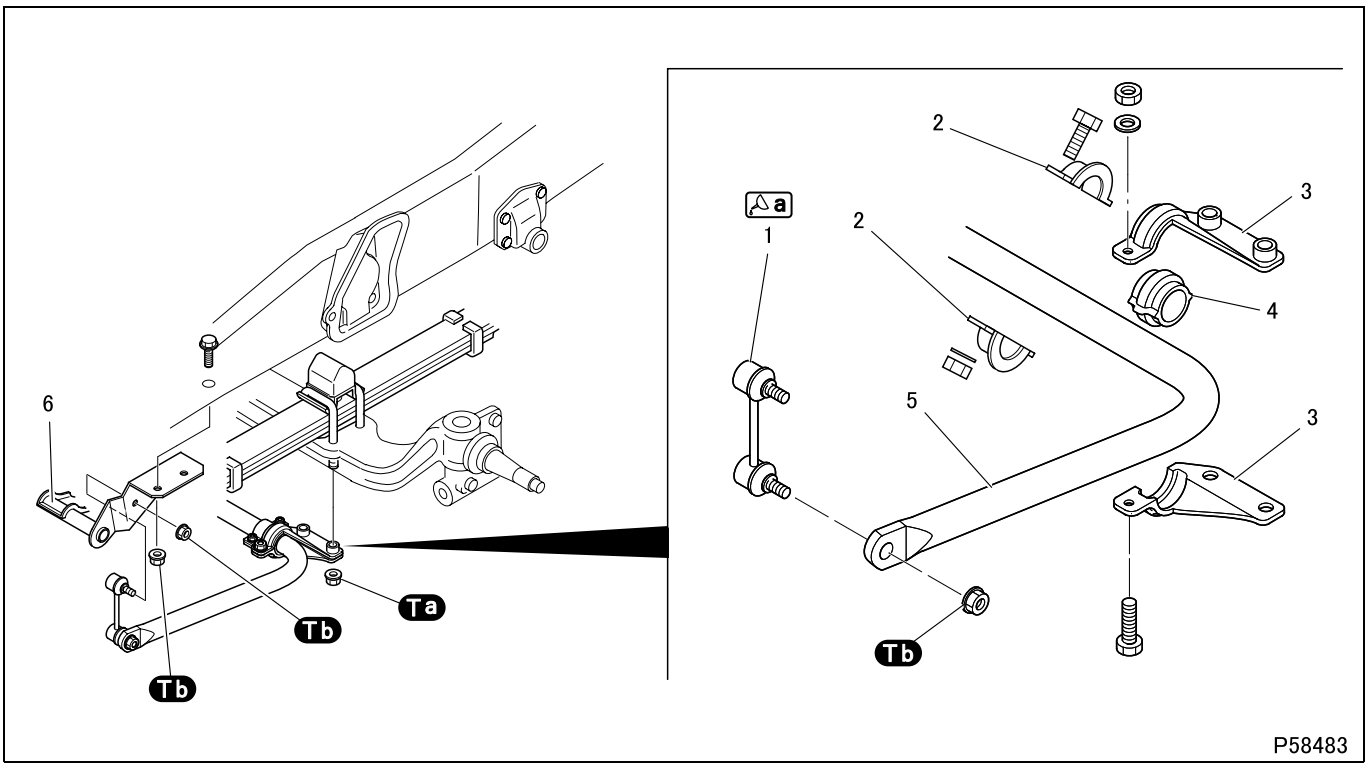

● **Removal sequence**

1 Stabilizer link
2 Stabilizer retainer
3 Stabilizer clamp
4 Stabilizer bushing
5 Stabilizer bar
6 Stabilizer bar bracket

● **Installation sequence**

Follow the removal sequence in reverse.

Service standards (Unit: mm {in.})

Location	Maintenance item		Standard value	Limit	Remedy
1	Stabilizer link	Starting torque	0.68 to 1.96 N·m {0.5 to 1.4 ft.lbs, 0.7 to 2.0 kgf·m}	–	Replace
		Play	0.2 {0.0079} or less	–	

Tightening torque (Unit: N·m {ft.lbs, kgf·m})

Mark	Parts to be tightened	Tightening torque	Remarks
Ta	Nut (U-bolt mounting)	162 ± 15 {120 ± 11, 16.5 ± 1.5}	–
Tb	Nut (stabilizer mounting)	90 to 120 {66 to 89, 9.0 to 12}	–
	Nut (stabilizer link mounting)		
	Nut (stabilizer bar bracket mounting)		

Lubricant and/or sealant

Mark	Points of application	Specified lubricant and/or sealant	Quantity
a	Dust cover lips on stabilizer link	Mitsubishi wheel bearing grease [NLGI No. 2 (Li soap)]	As required

◆Inspection procedure◆

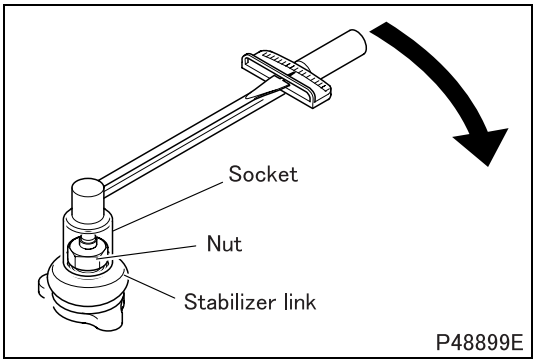

■ **Inspection: Stabilizer link**

(1) Starting torque

- Install a nut onto the stabilizer link.
- Install a socket and a torque wrench onto the nut. Measure the starting torque of the stabilizer link.
- If the measured value does not conform to the standard value, replace the stabilizer link.

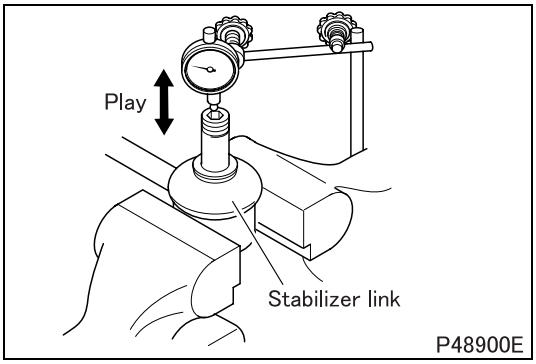

(2) Play

- If the measured value does not conform to the standard value, replace the stabilizer link.

(3) Dust cover

- If the dust cover has wear, crack, or damage, replace the stabilizer link.

◆Installation procedure◆

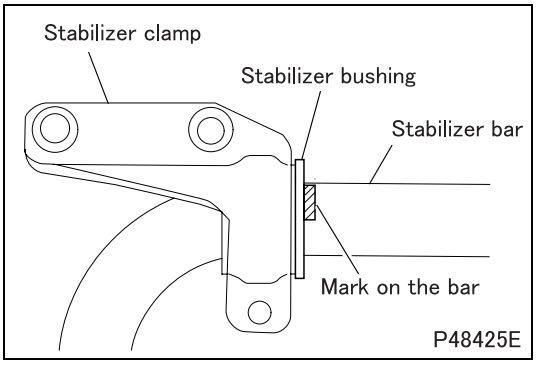

■ **Installation: Stabilizer clamp and bushing**

- Position the stabilizer bushing onto the stabilizer bar such that the end of the bushing aligns with the mark on the bar. Clamp them in place with the stabilizer clamp.

SHOCK ABSORBER <FE>

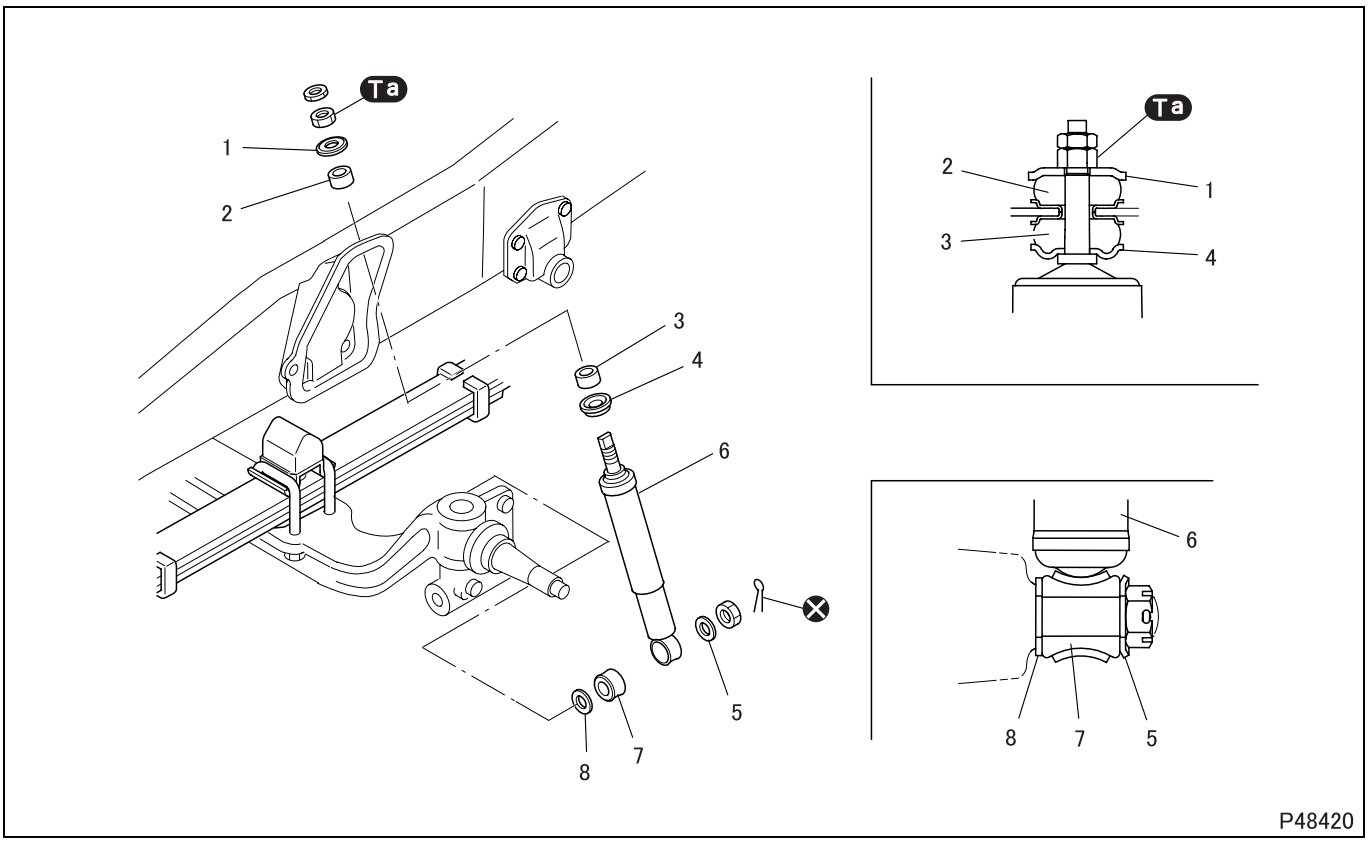

●Removal sequence

1 Washer
2 Rubber bushing
3 Rubber bushing
4 Washer
5 Washer
6 Shock absorber
7 Rubber bushing
8 Washer

⊗: Non-reusable parts

●Installation sequence

Follow the removal sequence in reverse.

Tightening torque (Unit: N·m {ft.lbs, kgf·m})

Mark	Parts to be tightened	Tightening torque	Remarks
Ta	Nut (rubber bushing mounting)	13 to 17 {9.6 to 13, 1.3 to 1.7}	–

◆Installation procedure◆

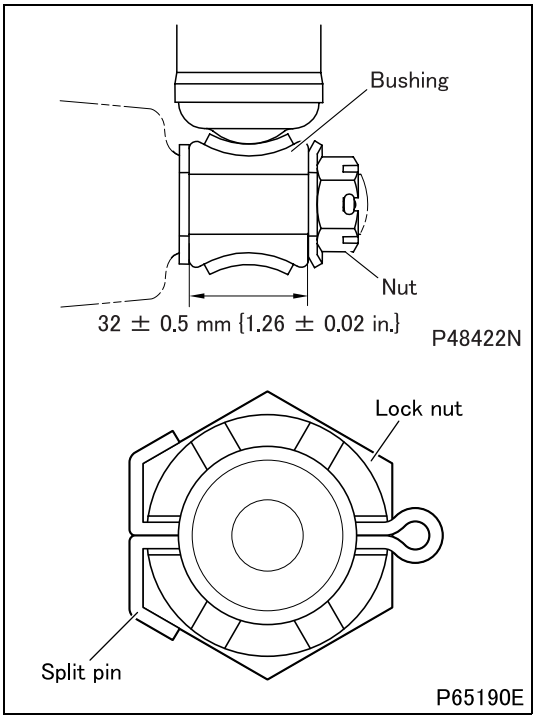

■ **Installation: Rubber bushing**

- Tighten the nut until the rubber bushing is squeezed to the illustrated dimension.
- Install the split pin as shown in the illustration.

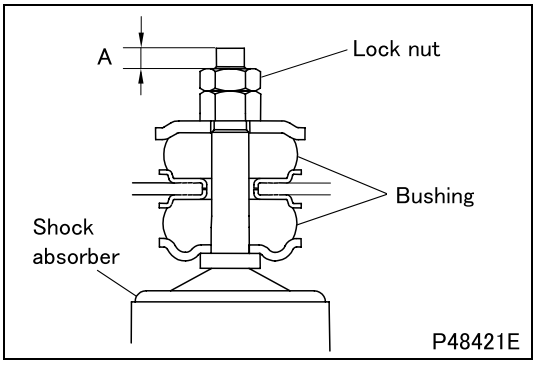

■ **Installation: Rubber bushing**

- Tighten the nuts until dimension A in the illustration becomes equal to the following value.
  A: 4.7 mm {0.19 in.}

SHOCK ABSORBER <FG>

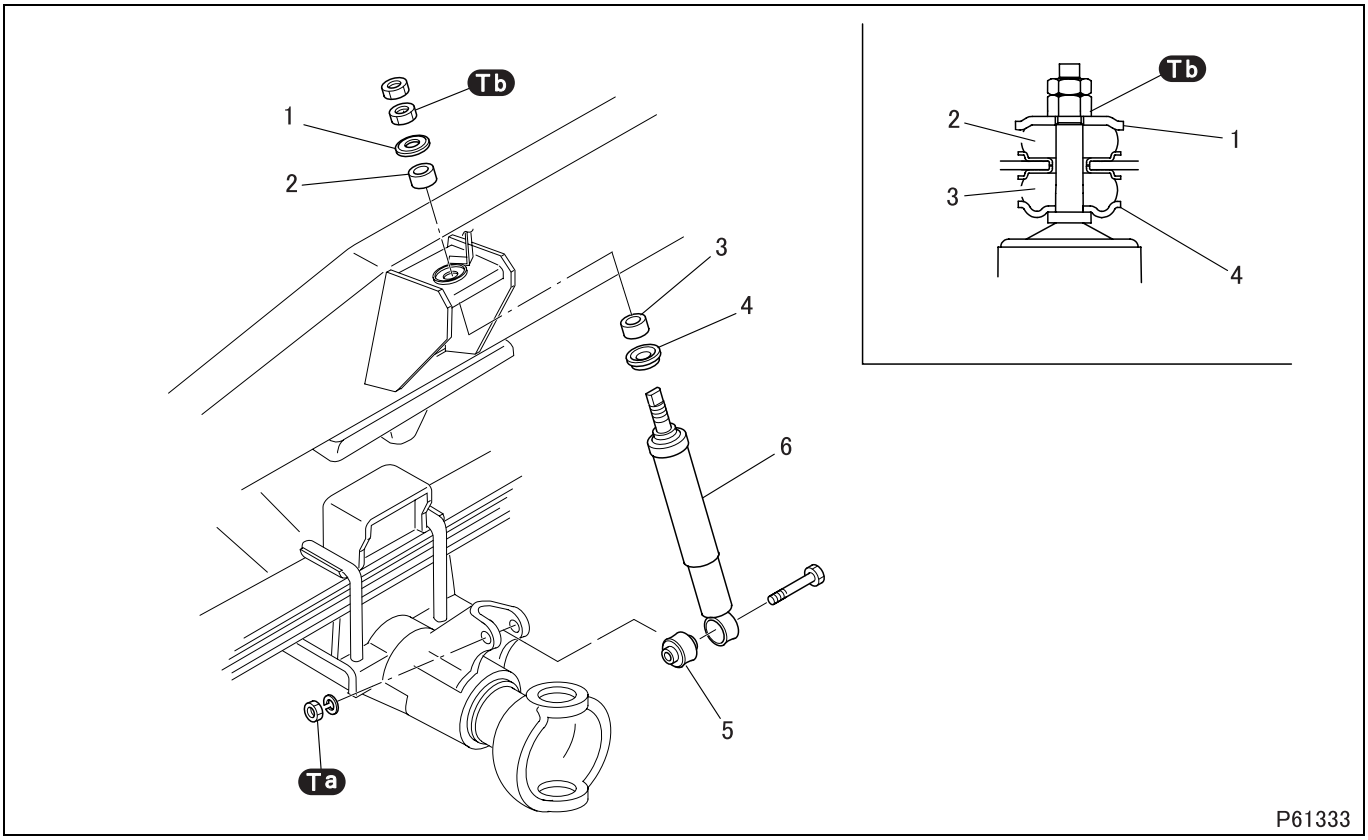

●Removal sequence

1 Washer
2 Rubber bushing
3 Rubber bushing
4 Washer
5 Rubber bushing
6 Shock absorber

●Installation sequence

Follow the removal sequence in reverse.

Tightening torque (Unit: N·m {ft.lbs, kgf·m})

Mark	Parts to be tightened	Tightening torque	Remarks
Ta	Nut (shock absorber mounting)	33 to 49 {24 to 36, 3.4 to 5.0}	–
Tb	Lock nut (rubber bushing mounting)	13 to 17 {9.6 to 13, 1.3 to 1.7}	–

◆Installation procedure◆

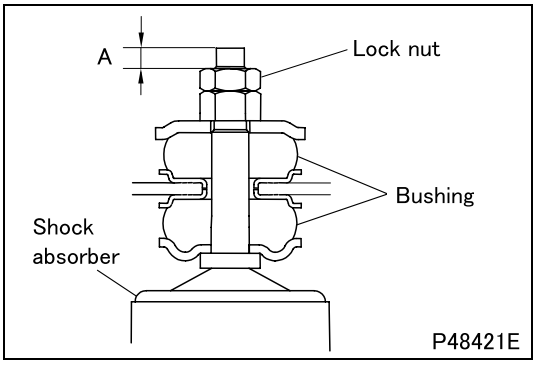

■ Installation: Rubber bushing

- Tighten the nuts until dimension A in the illustration becomes equal to the following value.
  A: 4.2 mm {0.17 in.}

M E M O

LEAF SPRING <FE>

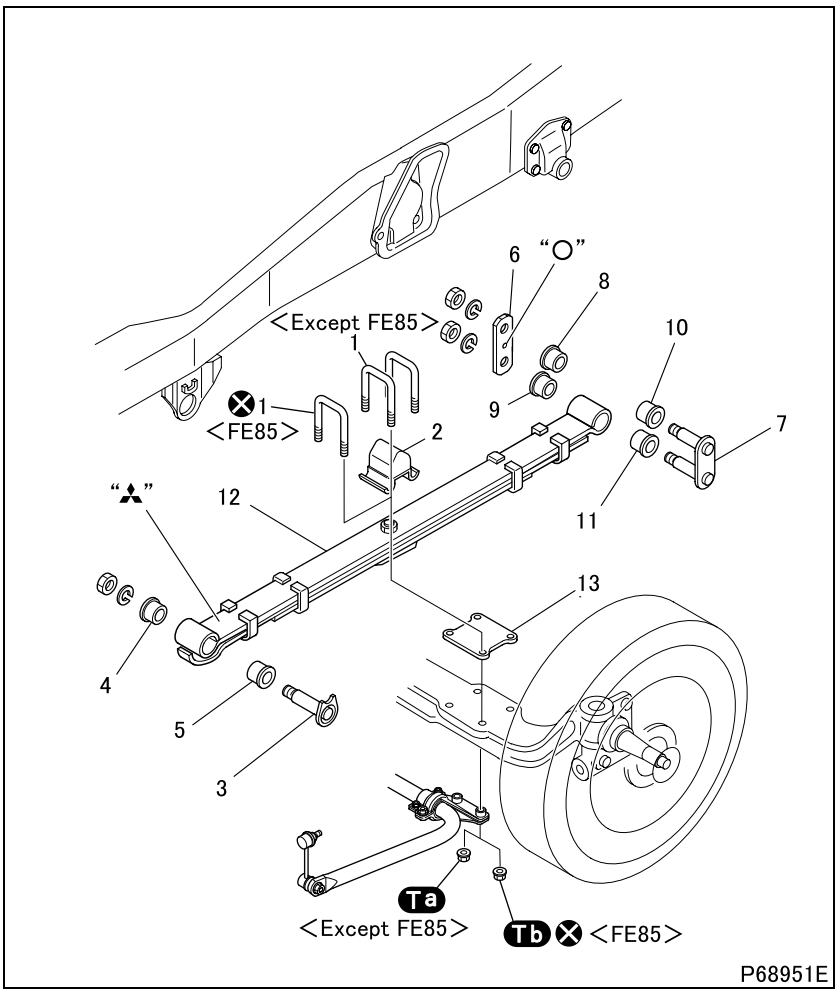

●Removal sequence

1 U-bolt
2 Front axle bumper
3 Spring pin
4 Rubber bushing
5 Rubber bushing
6 Shackle plate
7 Spring shackle
8 Rubber bushing
9 Rubber bushing
10 Rubber bushing
11 Rubber bushing
12 Leaf spring (See later section.)
13 Spacer

⊗: Non-reusable parts

●Installation sequence

Follow the removal sequence in reverse.

CAUTION ⚠

- **U-bolt and mounting nut are non-reusable. <FE85>**
- **Make sure to jack the vehicle up when tightening the U-bolt mounting nut to specified torque.**
- **Make sure to tighten the U-bolt mounting nut in dry tightening. If putting any oil or solvent on the nut, never use it.**

NOTE

- **The right-hand and left-hand leaf spring assemblies have different cambers from each other. Ensure that both assemblies are installed correctly. Reversed installation results in a slanted vehicle.**

Service standards (Unit: mm {in.})

Location	Maintenance item	Standard value	Limit	Remedy
3 to 5	Clearance between spring pin and rubber bushings	0 to 0.03 {0.0012}	–	Replace
7 to 11	Clearance between spring shackle and rubber bushings	0 to 0.03 {0.0012}	–	Replace

Tightening torque (Unit: N·m {ft.lbs, kgf·m})

Mark	Parts to be tightened	Tightening torque	Remarks
Ta	Nut (U-bolt mounting)	162 ± 15 {119 ± 11, 16.5 ± 1.5}	Nut color: Yellow
Tb	Nut (U-bolt mounting)	175 ± 5 {129 ± 3.7, 17.8 ± 0.5}	Nut color: Green

◆Installation procedure◆

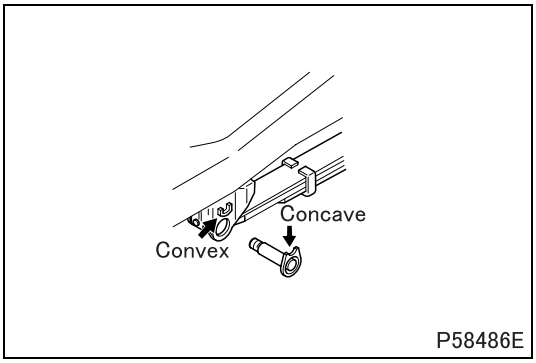

■ **Installation: Spring pin**

- Install the spring pin such that the concave on the pin engages with the convex on the frame.

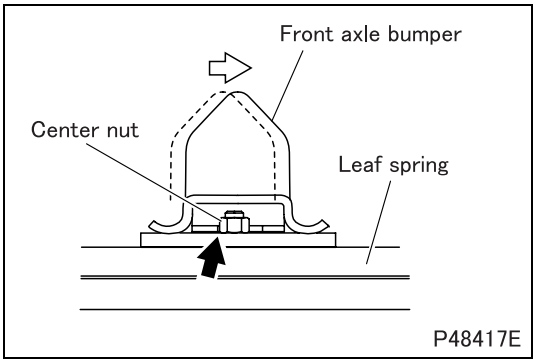

■ **Installation: Front axle bumper**

- With the unloaded vehicle, slide the front axle bumper on the leaf spring to the rear of the vehicle until it is against the center nut of the leaf spring. Then, install the bumper using U-bolts.

LEAF SPRING <FE>

Leaf Spring

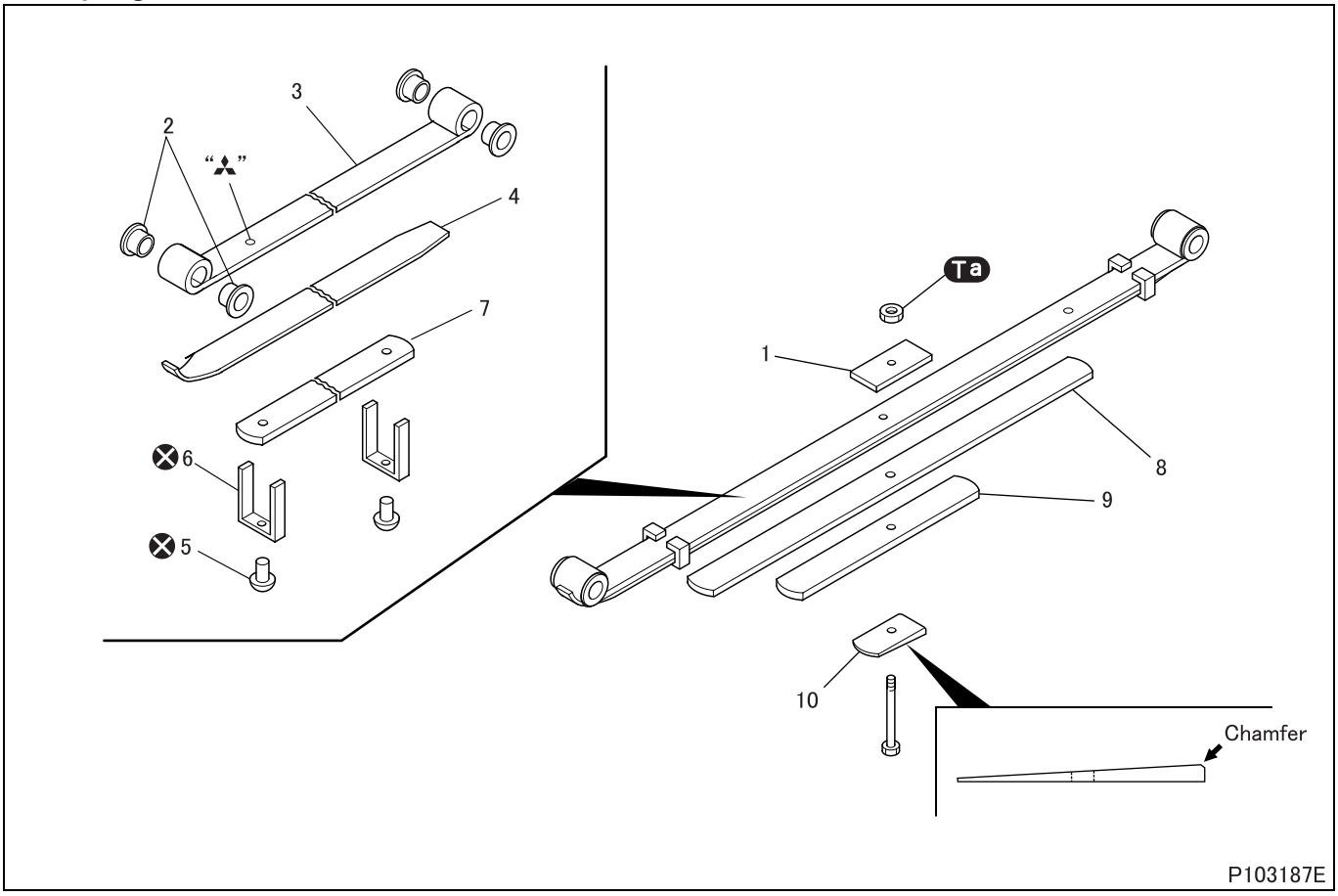

- The above schematic is only an example. Details may differ depending on vehicle models, such as the number of spring leaves, spacers, and the parts used.

●Disassembly sequence

1 Sheet (10 mm {0.39 in.} thick)
2 Collar
3 Leaf spring (No. 1)
4 Leaf spring (No. 2)
5 Rivet
6 Clip
7 Leaf spring (No. 3)
8 Leaf spring (No. 4)
9 Leaf spring (No. 5)
10 Caster shim

⊗: Non-reusable parts

●Assembly sequence

Follow the disassembly sequence in reverse.

Tightening torque (Unit: N·m {ft.lbs, kgf·m})

Mark	Parts to be tightened	Tightening torque	Remarks
Ta	Nut (assembly of leaf spring)	34 to 54 {25 to 40, 3.5 to 5.5}	–

◆Removal procedure◆

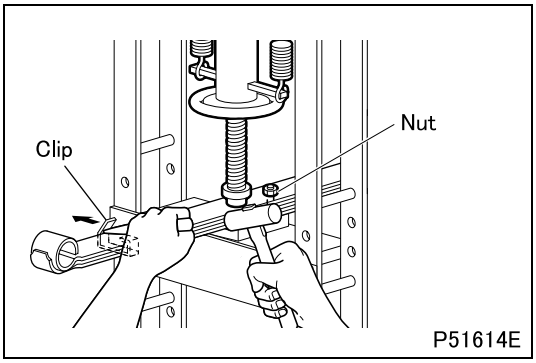

■ **Compression: Leaf spring**

- Using a press, compress the leaf spring as illustrated for subsequent operations.
- Using a chisel or the like, open the bent ends of the clip.

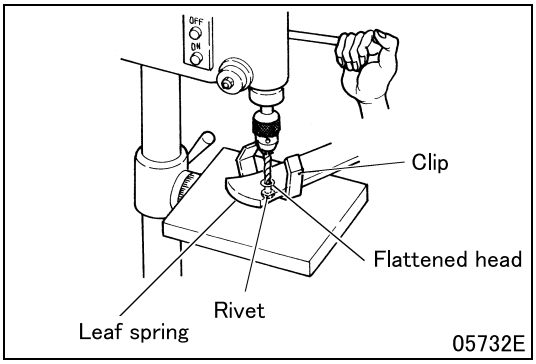

■ **Removal: Clip**

- Using a drill press, break the flattened head of the rivet and remove the clip from the leaf spring (No. 3).

◆Installation procedure◆

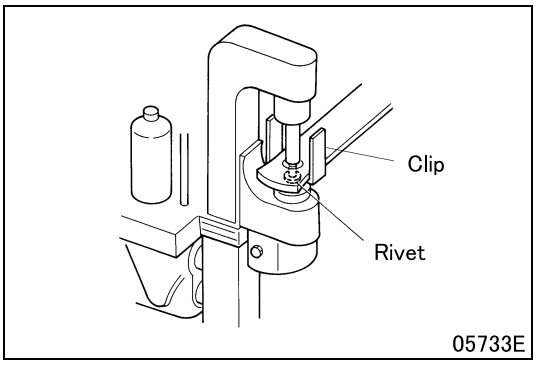

■ **Installation: Clip**

- Using a riveting machine, rivet a clip onto the leaf spring.

LEAF SPRING <FG>

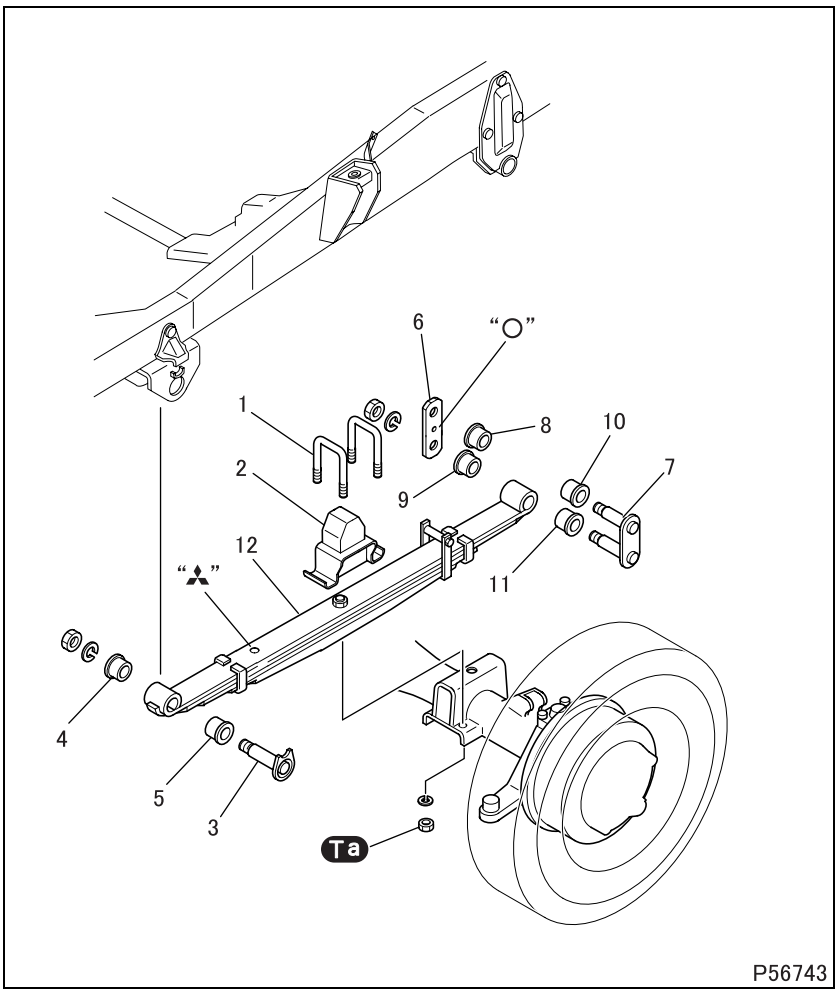

●Removal sequence

1 U-bolt
2 Front spring pad
3 Spring pin
4 Rubber bushing
5 Rubber bushing
6 Shackle plate
7 Spring shackle
8 Rubber bushing
9 Rubber bushing
10 Rubber bushing
11 Rubber bushing
12 Leaf spring (See later section.)

●Installation sequence

Follow the removal sequence in reverse.

CAUTION ⚠

- **Make sure to jack the vehicle up when tightening the U-bolt mounting nut to specified torque.**
- **Make sure to tighten the U-bolt mounting nut in dry tightening. If putting any oil or solvent on the nut, never use it.**

NOTE

- **The right-hand and left-hand leaf spring assemblies have different cambers from each other. Ensure that both assemblies are installed correctly. Reversed installation results in a slanted vehicle.**

Service standards (Unit: mm {in.})

Location	Maintenance item	Standard value	Limit	Remedy
3 to 5	Clearance between spring pin and rubber bushings	0 to 0.03 {0.0012}	–	Replace
7 to 11	Clearance between spring shackle and rubber bushings	0 to 0.03 {0.0012}	–	Replace

Tightening torque (Unit: N·m {ft.lbs, kgf·m})

Mark	Parts to be tightened	Tightening torque	Remarks
Ta	Nut (U-bolt mounting)	106 ± 8 {78 ± 5.9, 10.8 ± 0.8}	–

◆Installation procedure◆

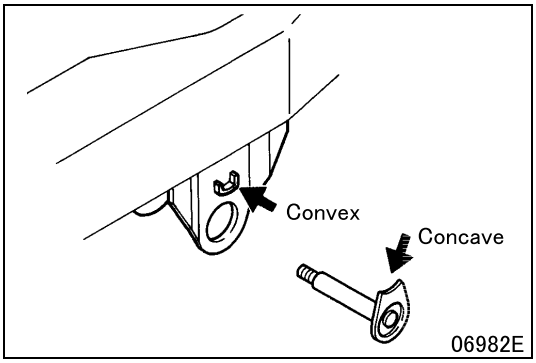

■ **Installation: Spring pin**

- Install the spring pin such that the concave on the pin engages with the convex on the frame.

LEAF SPRING <FG>

Leaf Spring

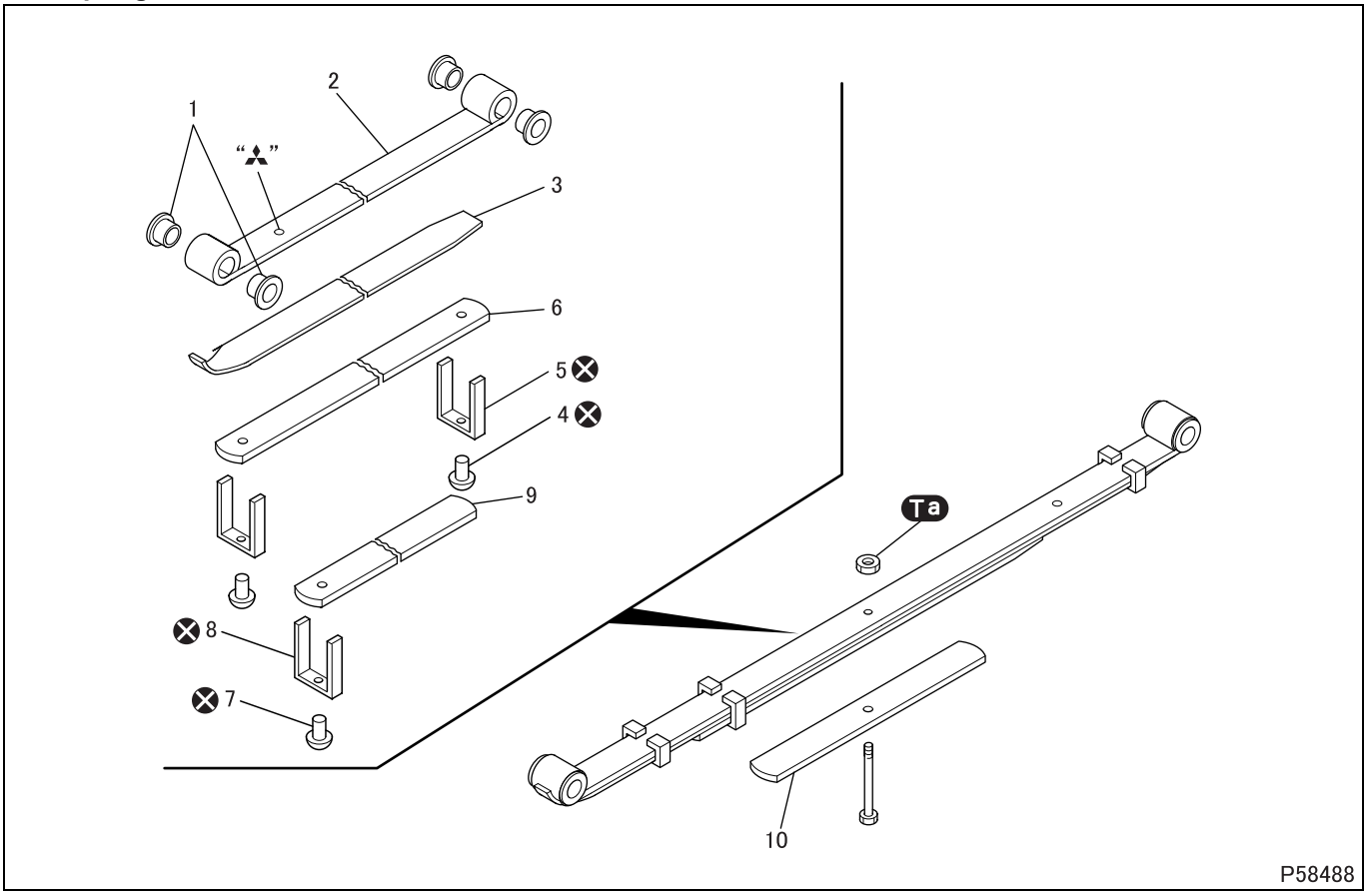

●Disassembly sequence

1 Collar
2 Leaf spring (No. 1)
3 Leaf spring (No. 2)
4 Rivet
5 Clip
6 Leaf spring (No. 3)
7 Rivet
8 Clip
9 Leaf spring (No. 4)
10 Leaf spring (No. 5)

⊗: Non-reusable parts

●Assembly sequence

Follow the disassembly sequence in reverse.

Tightening torque (Unit: N·m {ft.lbs, kgf·m})

Location	Parts to be tightened	Tightening torque	Remarks
Ta	Nut (assembly of leaf spring)	34 to 54 {25 to 38, 3.5 to 5.5}	–

◆Removal procedure◆

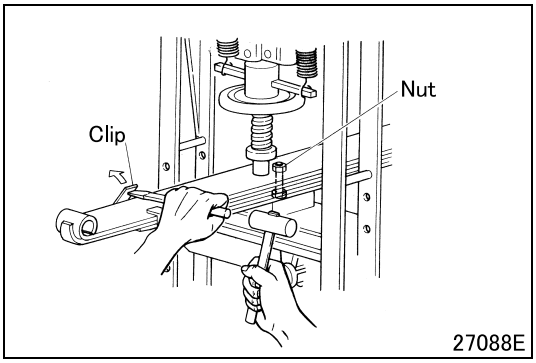

■ **Compression: Leaf spring**

- Using a press, compress the leaf spring as illustrated for subsequent operations.
- Using a chisel or the like, open the bent ends of the clip.

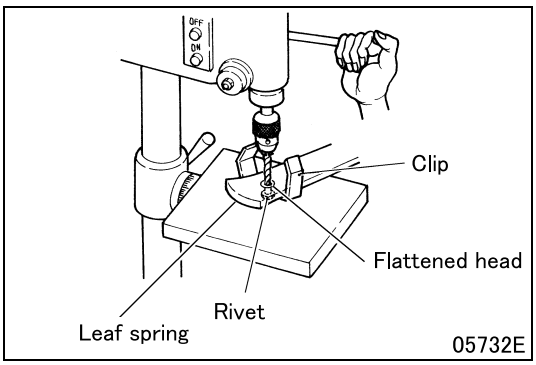

■ **Removal: Clip**

- Using a drill press, break the flattened head of the rivet and remove the clip from the leaf spring (No. 3 or 4).

◆Installation procedure◆

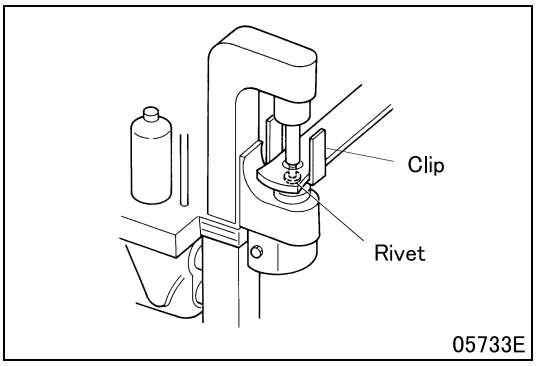

■ **Installation: Clip**

- Using a riveting machine, rivet a clip onto the leaf spring.

Group 34

Rear Suspension

Table of Contents

Back

Home

MITSUBISHI FUSO TRUCK OF AMERICA, Inc.

Pub.No.TWSE0713-34

INDEX

STRUCTURE AND OPERATION
1. Rear Suspension Elements 34-2

TROUBLESHOOTING 34-3

SHOCK ABSORBER 34-4

LEAF SPRING 34-6

STABILIZER 34-22

1. Rear Suspension Elements

<FE (except FE84DHW)>

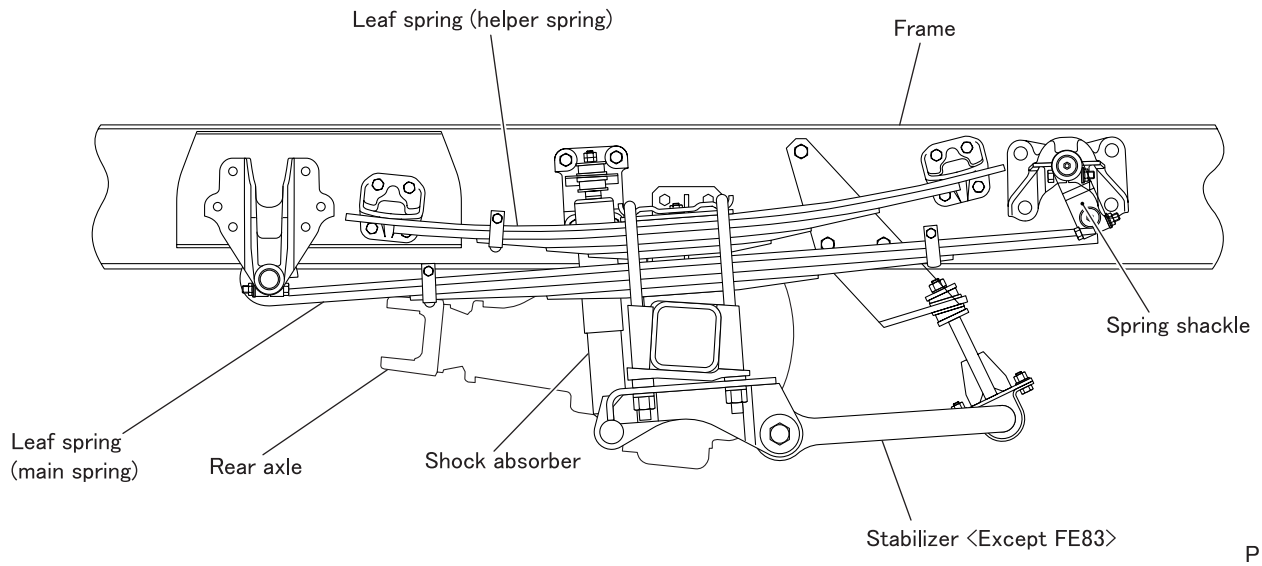

P103188E

<FE84DHW, FG>

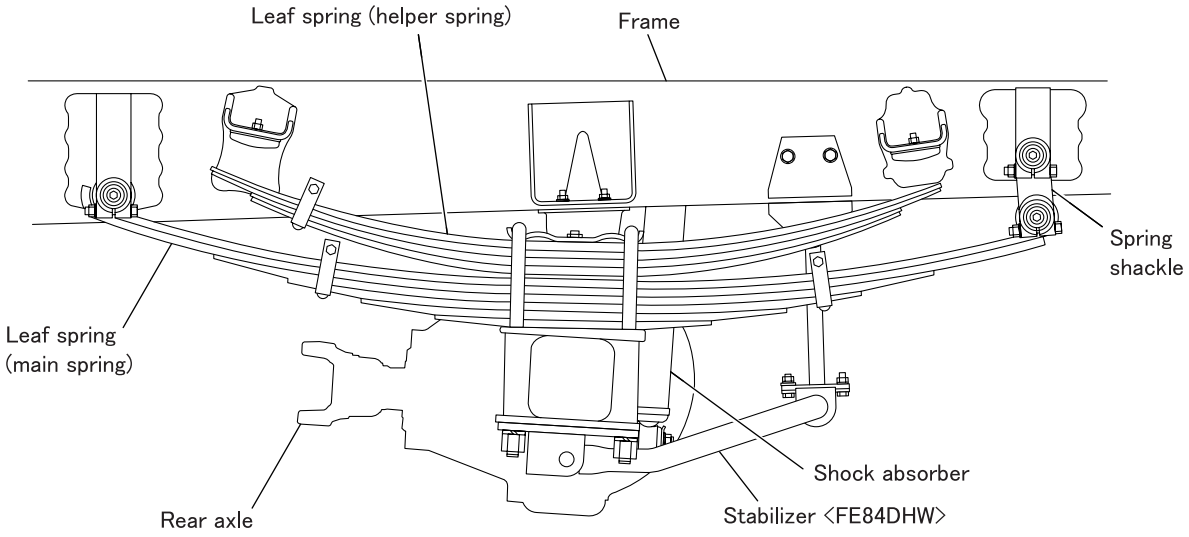

P103189E

- The rear suspensions shown above both use a spring shackle connected to the rear end of the leaf spring (shackle-link type suspension).
- The above schematics are only examples. Details may differ depending on vehicle models, such as the number of spring leaves, the shape of spring shackle, and the location of shock absorber.

Possible causes \ Symptoms		Feels as if floating	Tends to be noisy	Road bumps/pits received as shocks	Heavy rolling	Cyclical shocks from underneath	Excessive rolling while cruising	Reference Gr
Shock absorber	Substantial loss of oil and damping capacity	O						
	Rubber bushing worn		O					
	Loose fitting		O					
Tire	Tire and wheel needs balancing					O		Gr31
	Excessive tire pressure			O				
Leaf spring	Cracks or other damage			O				
	Broken		O					
	Loose U-bolt		O					
	Spring bushing worn		O					
Thrust clearance of metal bushing-type spring pin or shackle pin			O					
Helper rubber or helper spring stopper damaged or broken			O					
Spring pin over-tightened			O					
Stabilizer deformed, bushing worn							O	

SHOCK ABSORBER

<FE (except FE84DHW)>

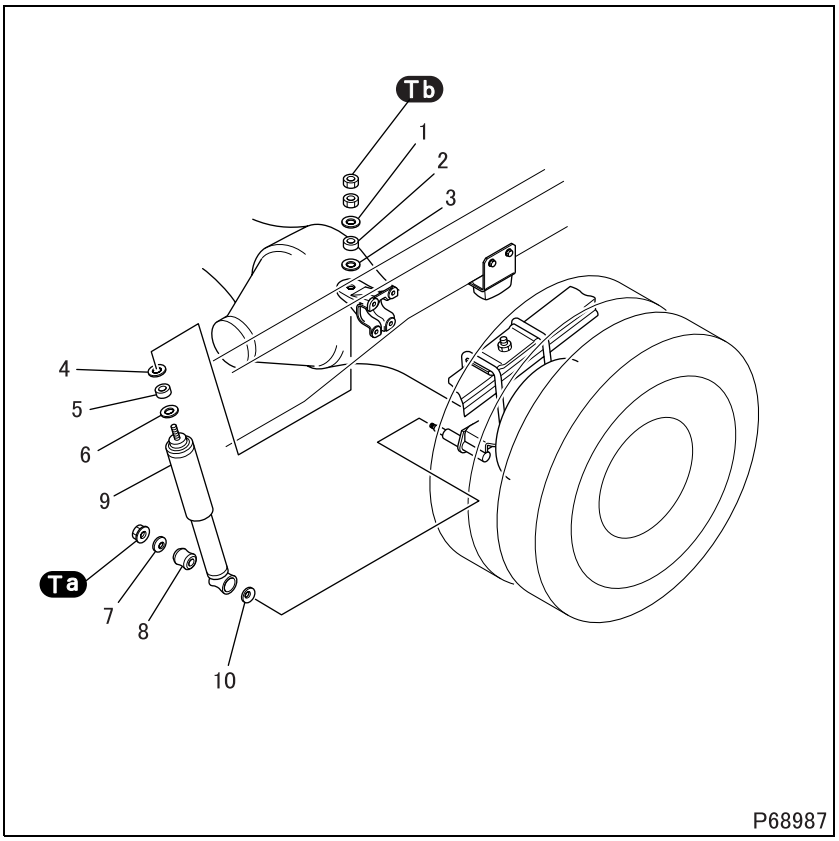

●Removal sequence

1 Washer
2 Rubber bushing
3 Washer
4 Washer
5 Rubber bushing
6 Washer
7 Washer
8 Rubber bushing
9 Shock absorber
10 Washer

●Installation sequence

Follow the removal sequence in reverse.

Tightening torque (Unit: N·m {ft.lbs, kgf·m})

Mark	Parts to be tightened	Tightening torque	Remarks
Ta	Nut (shock absorber mounting)	90 to 130 {66 to 96, 9.5 to 13}	–
Tb	Lock nut (rubber bushing mounting)	34 to 50 {25 to 37, 3.4 to 5.1}	–

◆Installation procedure◆

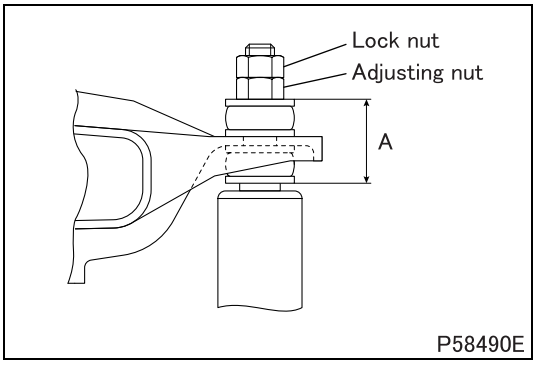

■ Installation: Shock absorber

- Tighten the adjusting nut until the part A in the illustration becomes the following dimension.
  A: 48 mm {1.89 in.}
- Tighten the lock nut to the specified torque.

<FE84DHW, FG>

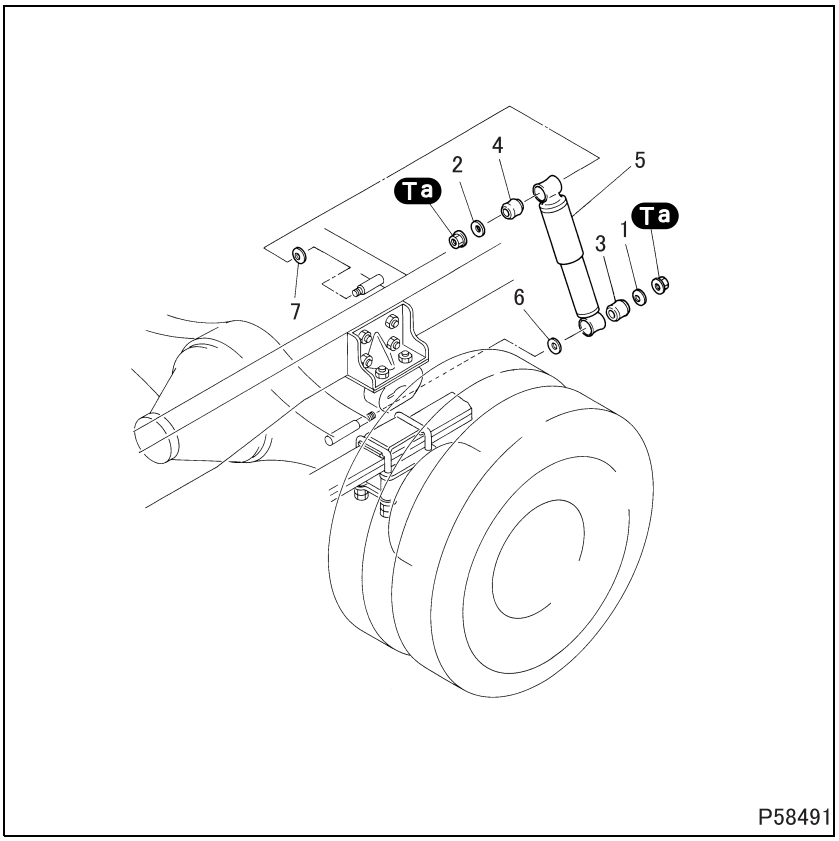

●Removal sequence

1 Washer
2 Washer
3 Rubber bushing
4 Rubber bushing
5 Shock absorber
6 Washer
7 Washer

●Installation sequence

Follow the removal sequence in reverse.

Tightening torque (Unit: N·m {ft.lbs, kgf·m})

Mark	Parts to be tightened	Tightening torque	Remarks
Ta	Nut (shock absorber mounting)	26 to 33 {2.7 to 3.4}	–

LEAF SPRING

Leaf Spring Assembly Layout

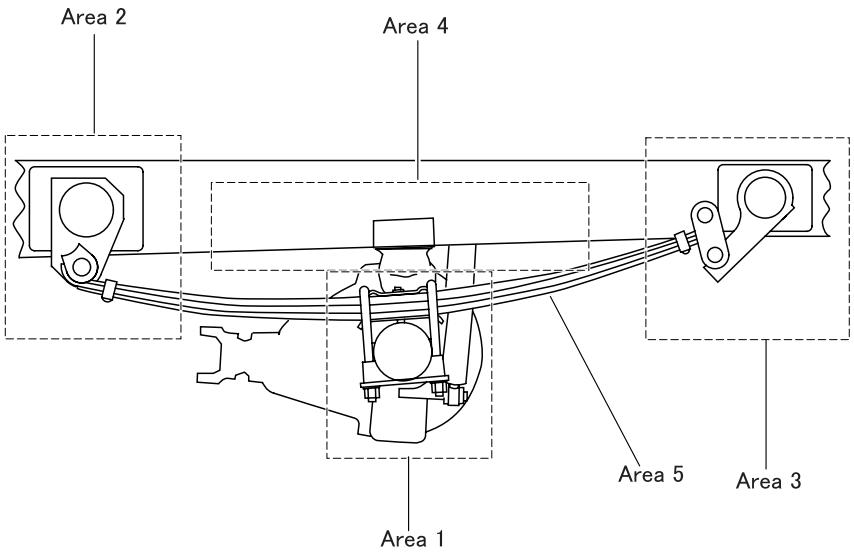

P49758E

- This section divides the leaf spring in 5 areas and describes removal and installation procedures for each area. For information on specific components, refer to the corresponding area descriptions.

U-bolt U-bolt nut	Area 1 (center section of leaf spring)
Spring pin Bushing	Area 2 (front section of leaf spring)
Spring shackle Bushing	Area 3 (rear section of leaf spring)
Helper rubber Helper spring stopper	Area 4 (stoppers)
Leaf spring	Area 5 (leaf springs)

Area 1 (center section of leaf spring)

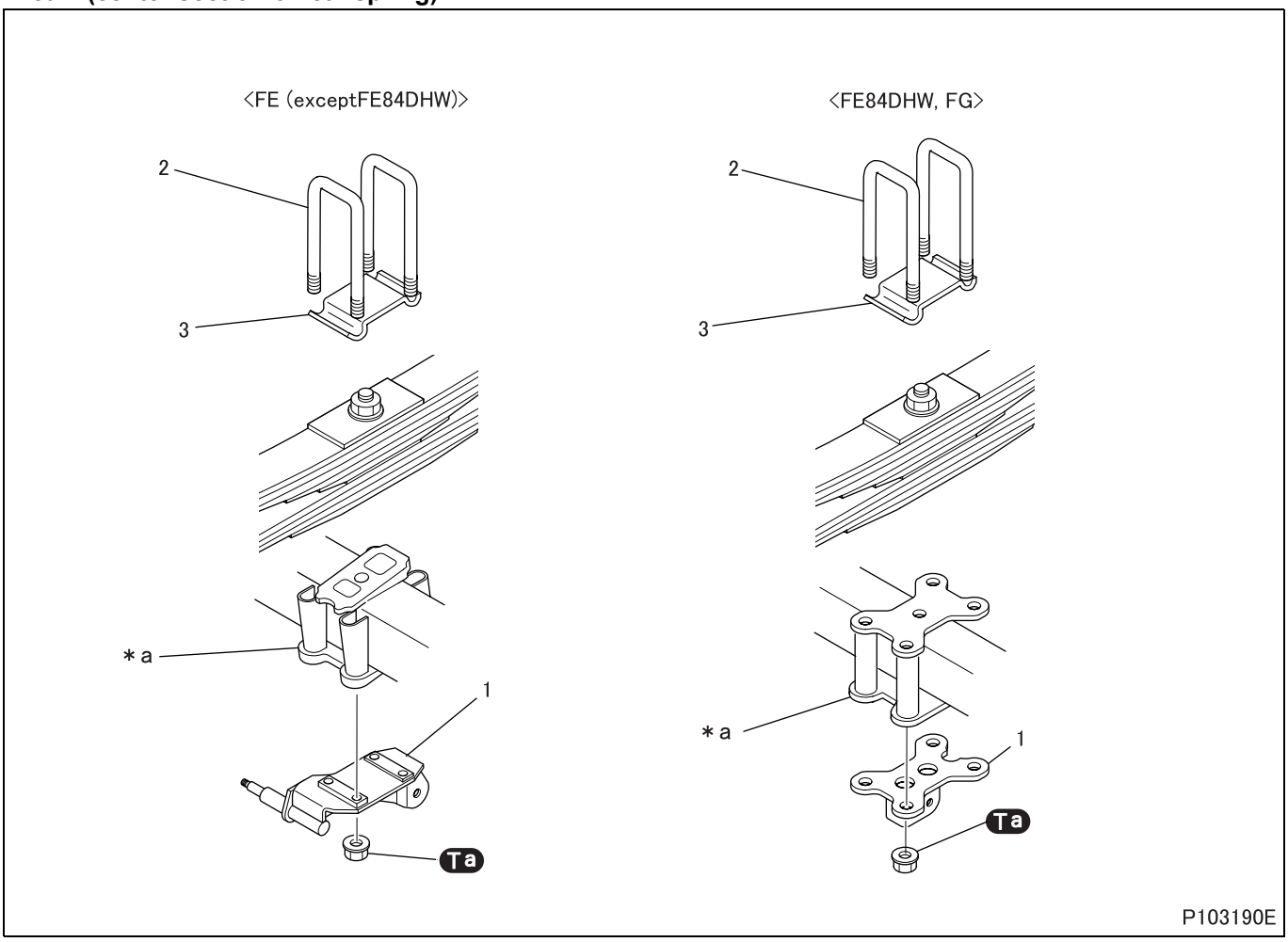

●Removal sequence

1 Stabilizer bracket lower <FE>
2 U-bolt
3 Spring pad
***a**: Rear axle

●Installation sequence

Follow the removal sequence in reverse.

Tightening torque (Unit: N·m {ft.lbs, kgf·m})

Mark	Parts to be tightened		Tightening torque	Remarks
Ta	Nut (U-bolt mounting)	FE (except FE84DHW)	292 to 394 {215 to 290, 29.8 to 40.2}	–
		FE84DHW	340 ± 50 {250 ± 38, 34.6 ± 5.2}	–
		FG	240 ± 15 {175 ± 11, 24.5 ± 1.5}	–

LEAF SPRING

Area 2 (front section of leaf spring)

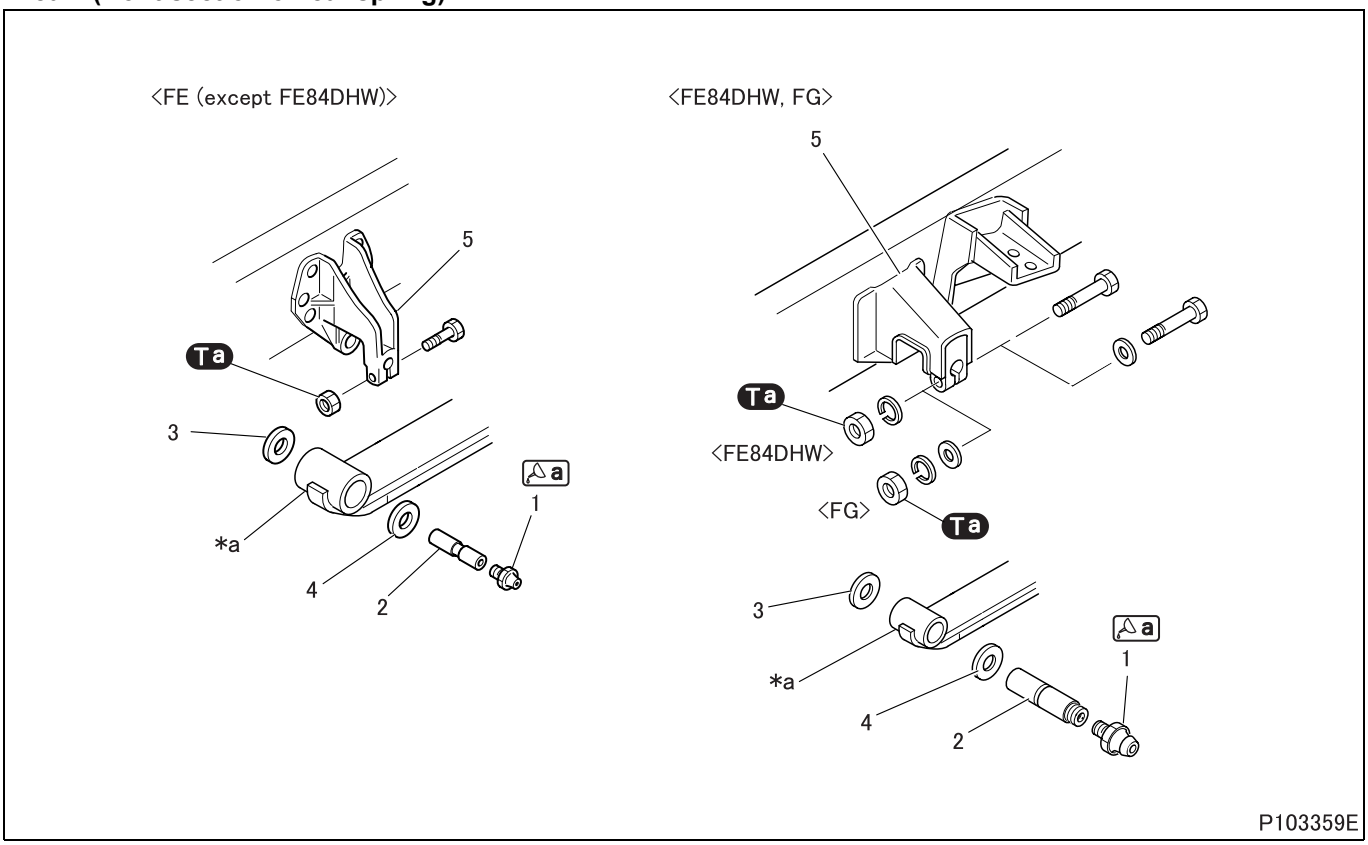

P103359E

● **Removal sequence**

1 Grease nipple
2 Spring pin
3 Side washer (for adjustment)
4 Side washer (for adjustment)
5 Rear spring hanger

***a**: Leaf spring

● **Installation sequence**

Follow the removal sequence in reverse.

Service standards (Unit: mm {in.})

Location	Maintenance item		Standard value	Limit	Remedy
2, 5	Clearance between spring pin and rear spring hanger		0 to 0.04 {0.0016}	0.3 {0.012}	Replace
2, *a	Clearance between spring pin and leaf spring bushing	FE (except FE84DHW)	0 to 0.12 {0.0047}	0.3 {0.012}	Replace
		FE84DHW, FG	0.04 to 0.14 {0.0016 to 0.0055}	0.5 {0.020}	
5, *a	Clearance between rear spring hanger and leaf spring	FE (except FE84DHW)	0.07 to 1.03 {0.0028 to 0.041}	1.3 {0.051}	Adjust or replace
		FE84DHW, FG	0.1 to 1.0 {0.0039 to 0.039}	1.0 {0.039}	

Tightening torque (Unit: N·m {ft.lbs, kgf·m})

Mark	Parts to be tightened		Tightening torque	Remarks
Ta	Nut (spring pin mounting)	FE (except FE84DHW)	80 to 110 {59 to 81, 8.0 to 11}	–
		FE84DHW, FG	29 to 37 {21 to 27, 3.0 to 3.8}	

Lubricant and/or sealant

Mark	Points of application	Specified lubricant and/or sealant	Quantity
a	Supply from grease nipple	Chassis grease [NLGI No. 1 (Li soap)]	As required

Special tools (Unit: mm {in.})

Mark	Tool name and shape	Part No.	Application
a	<FE (except FE84DHW)> Shackle pin setting bar A: φ4 {0.16}, B: φ12 {0.47}, C: 17 {0.67} 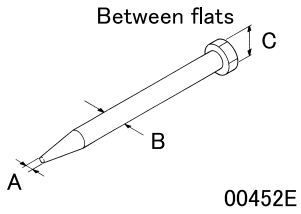 00452E	MC023419	Removal and installation of spring pin mounting bolt
b	<FE84DHW, FG> Spring pin remover A: M22 × 1.5 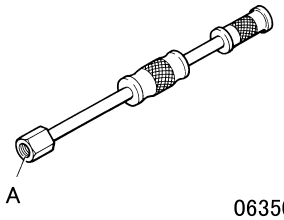 06350	MB999112	Removal of spring pin
c	<FE (except FE84DHW)> Spring pin remover A: PT 1/8 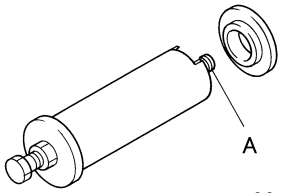 00453	MH061452	

◆Removal procedure◆

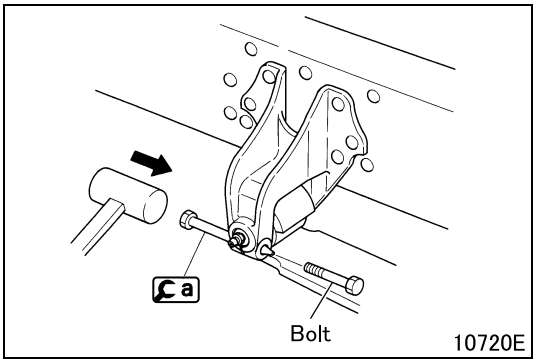

10720E

■ **Removal: Spring pin**
<FE (except FE84DHW)>

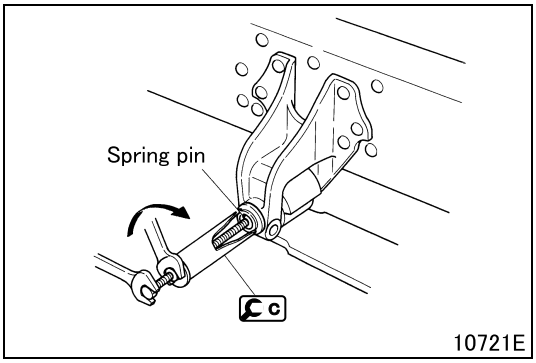

10721E

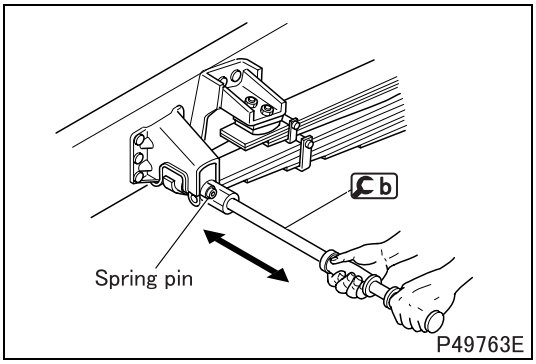

<FE84DHW, FG>

◆Inspection procedure◆

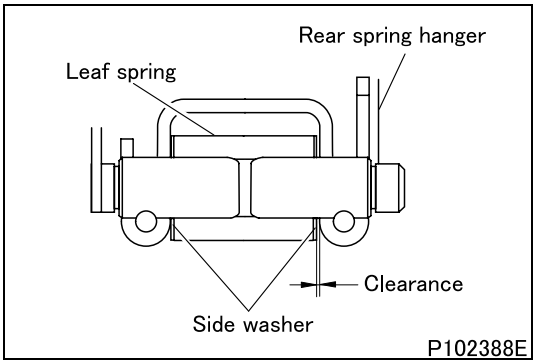

■ **Inspection: Clearance between rear spring hanger and leaf spring**

- Measure the spring-to-hanger clearance using feeler gauge. If the measured value is equal to or exceeds the limit, adjust by means of side washers.

Side washer sizes available (mm {in.})

FE (except FE84DHW)	2.8, 3.2, 3.5, 3.8, 4.0 {0.11, 0.13, 0.14, 0.15, 0.16}
FE84DHW, FG	0.5, 1.0 {0.020, 0.039}

◆Installation procedure◆

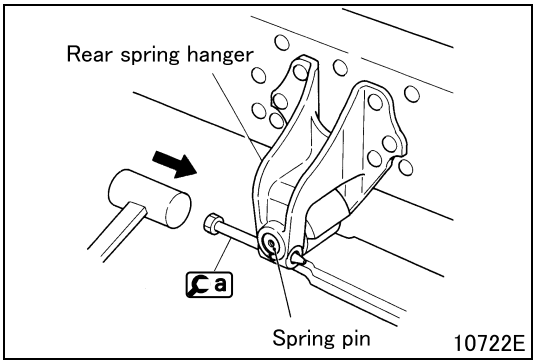

■ **Installation: Spring pin**

<FE (except FE84DHW)>

- Using a, align the bolt hole in the rear spring hanger with the bolt groove in the spring pin.

<FE84DHW, FG>

- Substitute an appropriate bolt or the like for a.

M E M O

Area 3 (rear section of leaf spring)

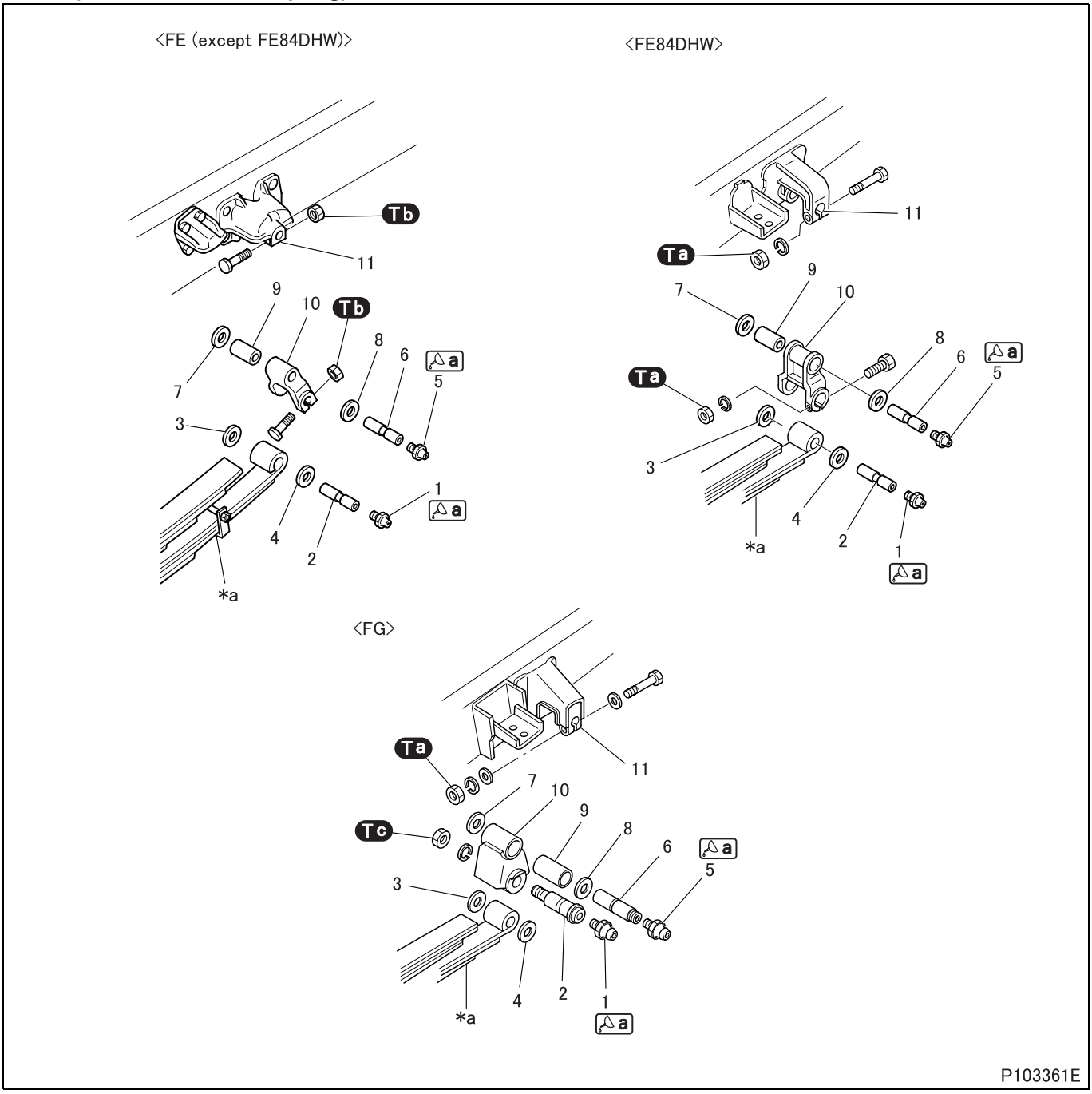

●Removal sequence

1 Grease nipple
2 Spring pin
3 Side washer (for adjustment)
4 Side washer (for adjustment)
5 Grease nipple
6 Spring pin
7 Side washer (for adjustment)
8 Side washer (for adjustment)
9 Bushing
10 Spring shackle
11 Rear shackle hanger

***a**: Leaf spring

●Installation sequence

Follow the disassembly sequence in reverse.

Service standards (Unit: mm {in.})

Location	Maintenance item		Standard value	Limit	Remedy
2, 10	Clearance between spring pin and spring shackle		0 to 0.04 {0.0016}	0.3 {0.012}	Replace
2, *a	Clearance between spring pin and leaf spring	FE (except FE84DHW)	0 to 0.12 {0.0047}	0.3 {0.012}	Replace
		FE84DHW, FG	0.04 to 0.14 {0.0016 to 0.0055}	0.5 {0.020}	
6, 9	Clearance between spring pin and bushing	FE (except FE84DHW)	0.02 to 0.14 {0.00079 to 0.0055}	0.3 {0.012}	Replace
		FE84DHW, FG	0.04 to 0.14 {0.0016 to 0.0055}	0.5 {0.020}	
6, 11	Clearance between spring pin and rear shackle hanger		0 to 0.04 {0.0016}	0.3 {0.012}	Replace
10, 11	Clearance between spring shackle and rear shackle hanger	FE (except FE84DHW)	0.07 to 0.73 {0.0028 to 0.029}	1.0 {0.039}	Adjust or replace
		FE84DHW	0.1 to 0.9 {0.0039 to 0.035}	1.0 {0.039}	
		FG	0.1 to 0.7 {0.0039 to 0.028}	1.0 {0.039}	
10, *a	Clearance between spring shackle and leaf spring	FE (except FE84DHW)	0.07 to 1.03 {0.0028 to 0.041}	1.3 {0.051}	Adjust or replace
		FE84DHW	0.5 to 1.2 {0.020 to 0.047}	1.5 {0.059}	
		FG	0.1 to 0.7 {0.0039 to 0.028}	1.0 {0.039}	

Tightening torque (Unit: N·m {ft.lbs, kgf·m})

Mark	Parts to be tightened	Tightening torque	Remarks
Ta	Nut (spring pin mounting)	29.4 to 37.2 {22 to 27, 3.0 to 3.8}	–
Tb	Nut (spring pin mounting)	80 to 112 {59 to 83, 8.0 to 11}	–
Tc	Nut (spring pin mounting)	148 to 201 {110 to 150, 15.1 to 20.5}	–

Lubricant and/or sealant

Mark	Points of application	Specified lubricant and/or sealant	Quantity
Ca	Supply from grease nipple	Chassis grease [NLGI No. 1 (Li soap)]	As required

Special tools (Unit: mm {in.})

Mark	Tool name and shape	Part No.	Application
a	<FE (except FE84DHW)> Shackle pin setting bar A: φ4 {0.16}, B: φ12 {0.47}, C: 17 {0.67} 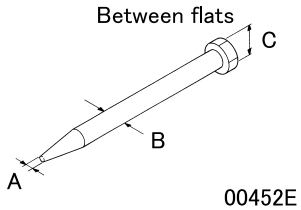 00452E	MC023419	Removal and installation of spring pin mounting bolt
b	<FE84DHW , FG> Spring pin remover A: M22 × 1.5 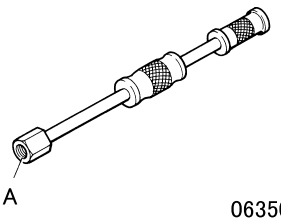 06350	MB999112	Removal of spring pin
c	<FE (except FE84DHW)> Spring pin remover A: PT 1/8 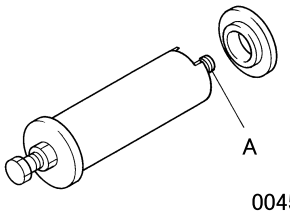 00453	MH061452	

◆Removal procedure◆

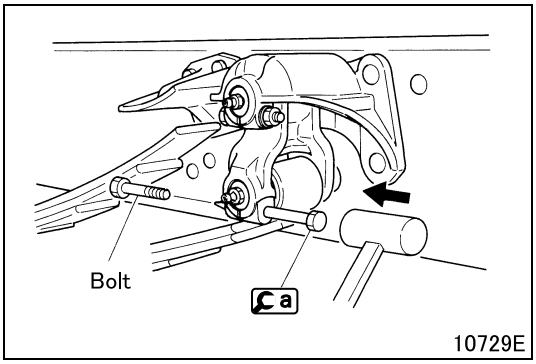

10729E

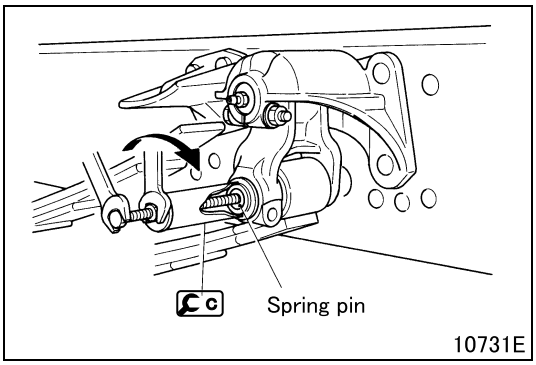

10731E

■ Removal: Spring pin
<FE (except FE84DHW)>

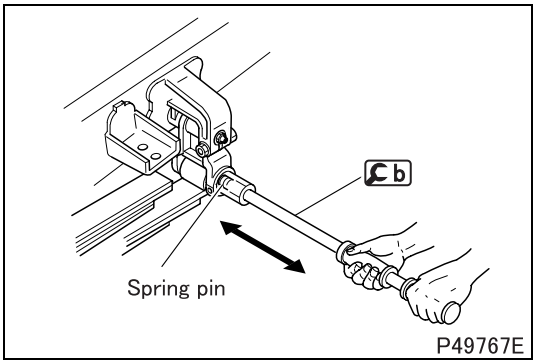

<FE84DHW>

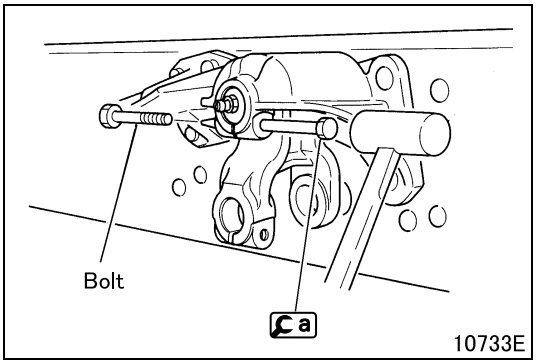

■ Removal: Spring pin

<FE (except FE84DHW)>

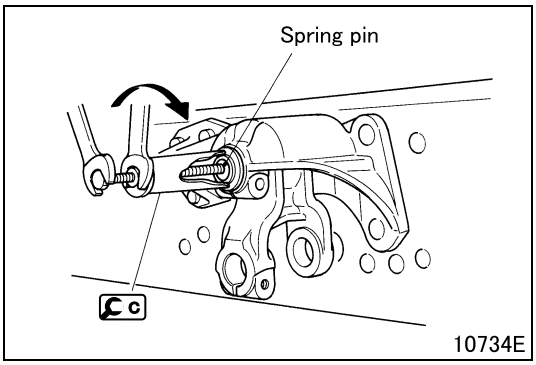

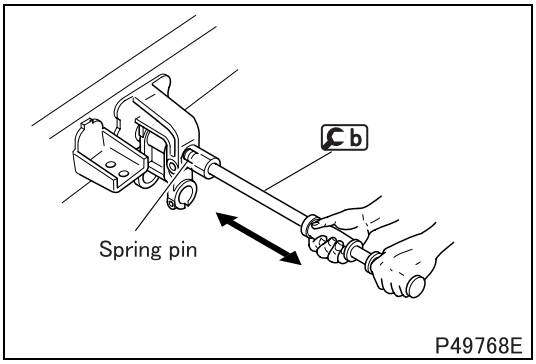

<FE84DHW, FG>

◆Inspection procedure◆

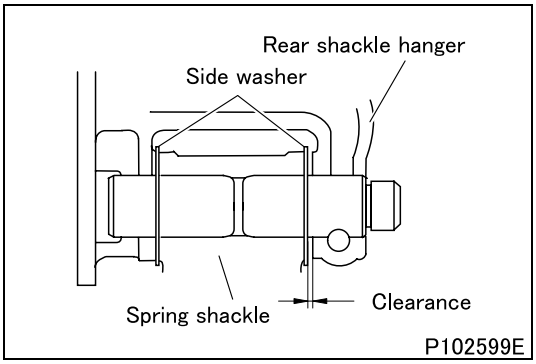

■ Inspection: Clearance between spring shackle and rear shackle hanger

- Measure the spring-to-hanger clearance using feeler gauge. If the measured value is equal to or exceeds the limit, adjust by means of side washers.

Side washer sizes available (mm {in.})

FE (except FE84DHW)	2.8, 3.2, 3.5, 3.8, 4.0 {0.11, 0.13, 0.14, 0.15, 0.16}
FE84DHW, FG	0.5, 1.0 {0.020, 0.039}

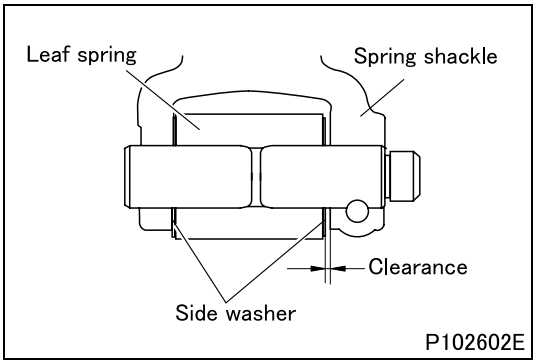

■ **Inspection: Clearance between spring shackle and leaf spring**

- Measure the spring-to-shackle clearance using feeler gauge. If the measured value is equal to or exceeds the limit, adjust by means of side washers.

Side washer sizes available (mm {in.})

FE (except FE84DHW)	2.8, 3.2, 3.5, 3.8, 4.0 {0.11, 0.13, 0.14, 0.15, 0.16}
FE84DHW, FG	0.5, 1.0 {0.020, 0.039}

◆**Installation procedure**◆

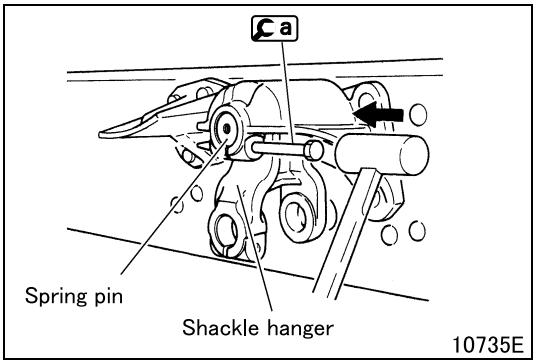

■ **Installation: Spring pin**

- <FE (except FE84DHW)>
  Using a, align the bolt hole in the shackle hanger with the bolt groove in the spring pin.
- <FE84DHW, FG>
  Substitute an appropriate bolt or the like for a.

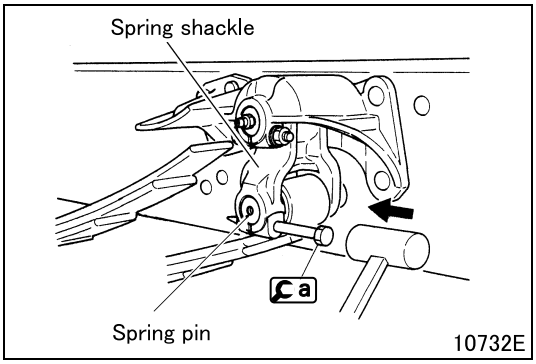

■ **Installation: Spring pin**

- <FE (except FE84DHW)>
  Using a, align the bolt hole in the spring shackle with the bolt groove in the spring pin.
- <FE84DHW>
  Substitute an appropriate bolt or the like for a.

Area 4 (stoppers)

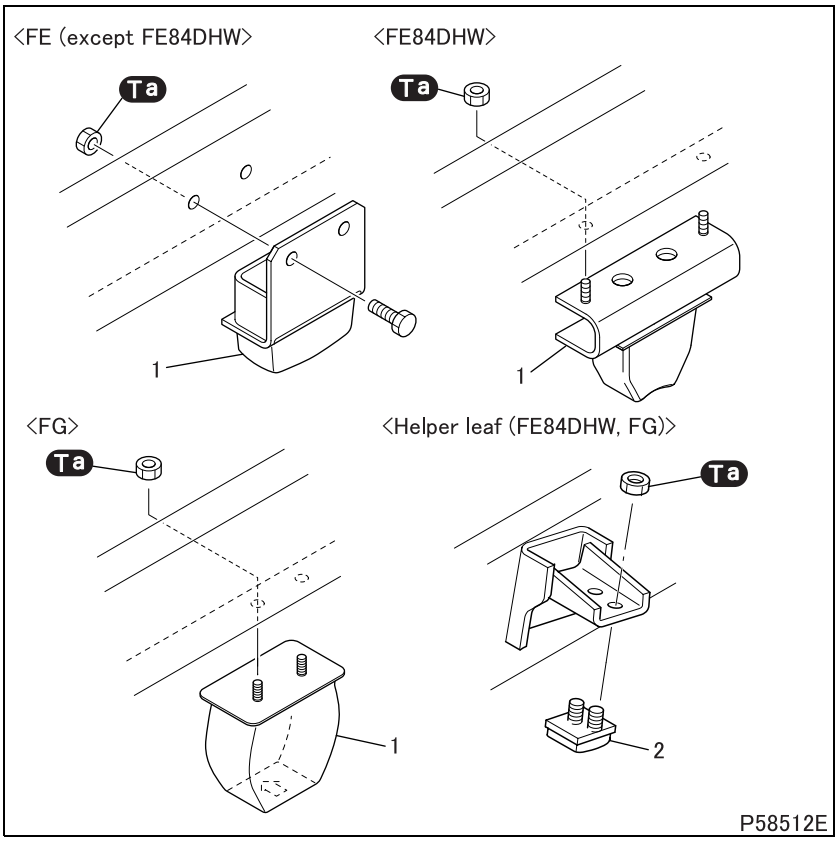

●Removal sequence

1 Helper rubber
2 Helper spring stopper

●Installation sequence

Follow the removal sequence in reverse.

Tightening torque (Unit: N·m {kgf·m})

Mark	Parts to be tightened	Tightening torque	Remarks
Ta	Nut (helper rubber mounting)	12 to 15 {8.9 to 11, 1.2 to 1.5}	–

◆Installation procedure◆

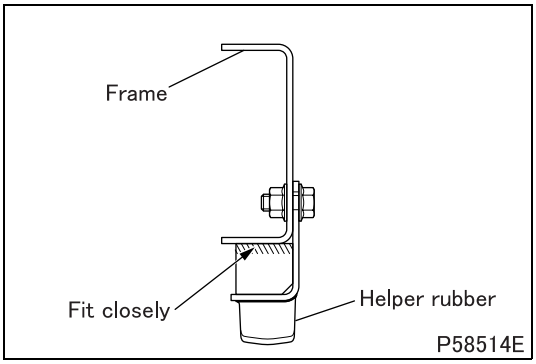

■ Installation: Helper rubber <FE (except FE84DHW)>

- Fit helper rubber to the lower face of frame closely as illustrated, then tighten installation bolt and nut.

LEAF SPRING

Area 5 (leaf spring)

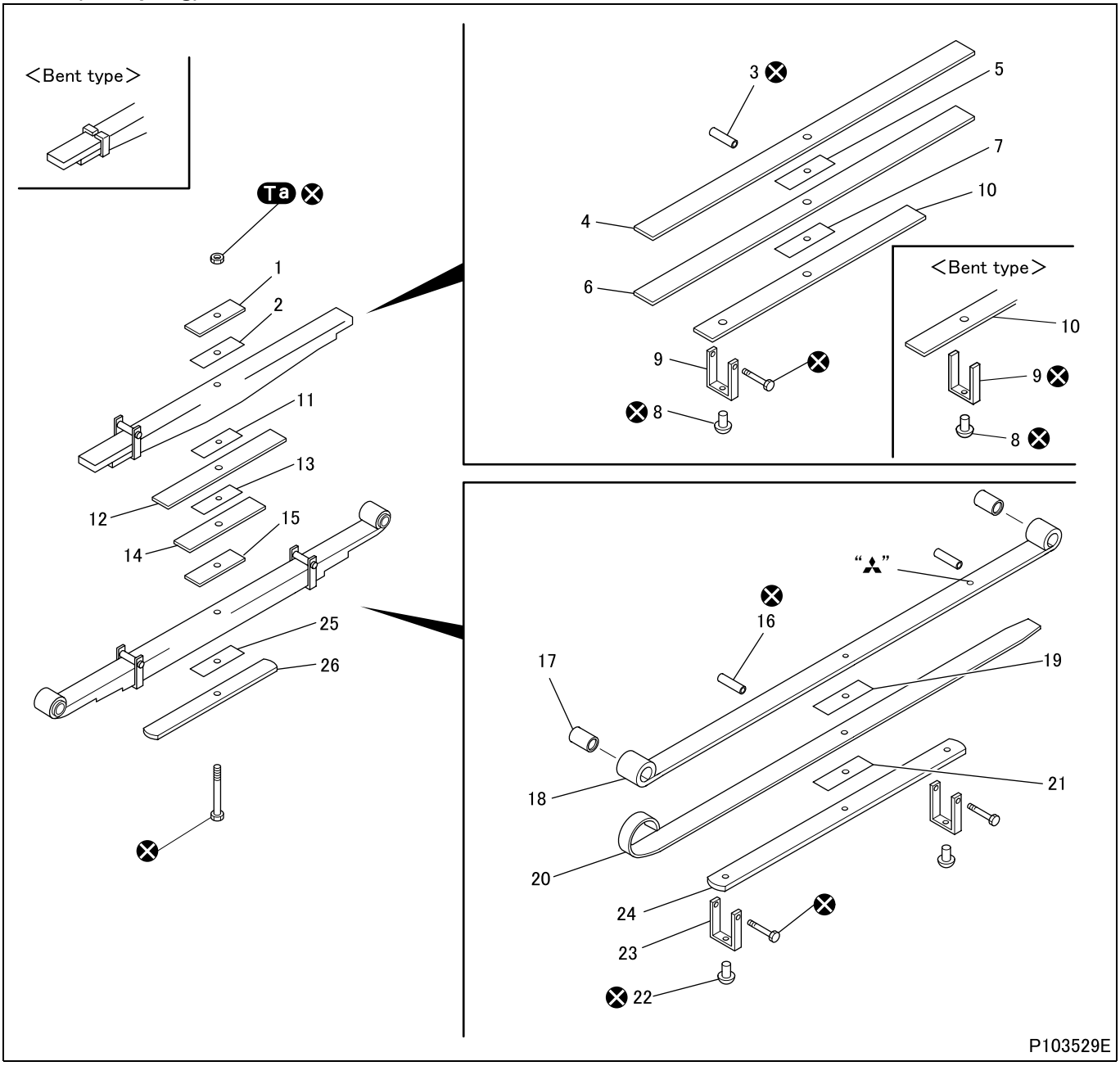

- The above schematic is only an example. Details may differ depending on vehicle models, such as the number of spring leaves, spacers, and the parts used.

●Disassembly sequence

1 Spacer
2 Center spacer
3 Pipe
4 Leaf spring (helper)
5 Center spacer
6 Leaf spring (helper)
7 Center spacer
8 Rivet
9 Clip
10 Leaf spring (helper)
11 Center spacer
12 Leaf spring (helper)
13 Center spacer
14 Leaf spring (helper)
15 Spacer
16 Pipe
17 Metal bushing
18 Leaf spring (main)
19 Center spacer
20 Leaf spring (main)
21 Center spacer
22 Rivet
23 Clip
24 Leaf spring (main)
25 Center spacer
26 Leaf spring (main)

⊗: Non-reusable parts

●Assembly sequence

Follow the disassembly sequence in reverse.

Tightening torque (Unit: N·m {ft.lbs, kgf·m})

Mark	Parts to be tightened	Tightening torque	Remarks
Ta	Nut (assembly of leaf spring)	69 to 93 {51 to 69, 7.0 to 9.5}	–

Special tools (Unit: mm {in.})

Mark	Tool name and shape	Part No.	Application
Ca	Bushing installer A: Bushing installer A B: Bushing installer B 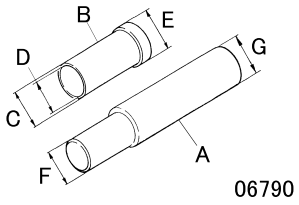 06790 C: φ28 {1.10} D: φ25 {0.98} E: φ32.8 {1.29} F: φ25 {0.98} G: φ30 {1.18}	MB999066 A: MB999067 B: MB999068	Removal and installation of metal bushing

◆Work before removal◆

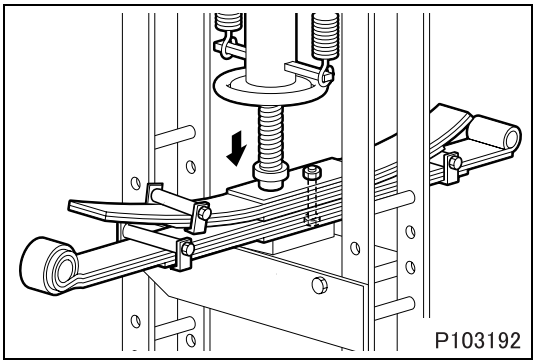

■ Compression: Leaf spring

- Using a press, compress the leaf spring as illustrated for subsequent operations.
- Using a chisel or the like, open the bent ends of the clip. <Bent type>

◆Removal procedure◆

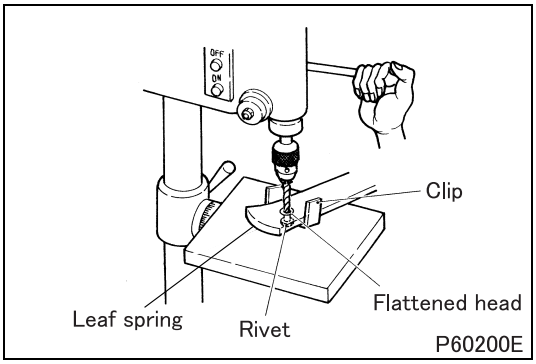

■ Removal: Clip

- Using a drill press, break the flattened head of the rivet and remove the clip from the leaf spring.

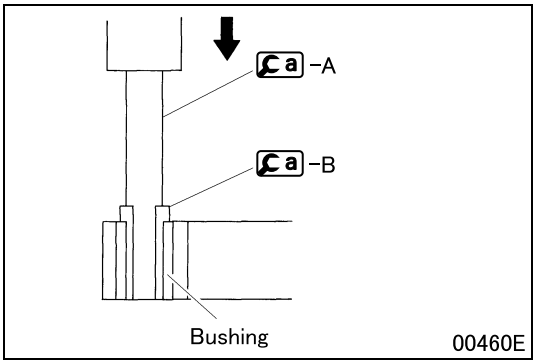

■ **Removal: Metal bushing**

◆**Installation procedure**◆

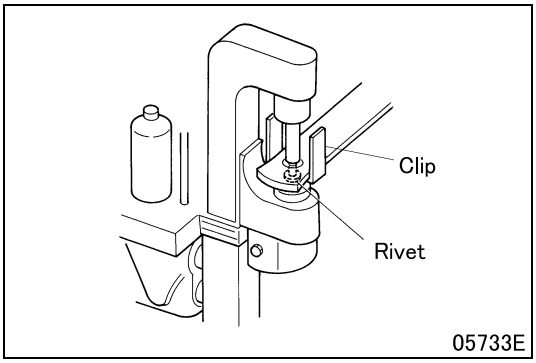

■ **Installation: Clip**

- Using a riveting machine, rivet a clip onto the leaf spring.

■ **Installation: Metal bushing**

- Install the metal bushing in a manner similar to that for removal. (See **"■Removal: Metal bushing"**.)

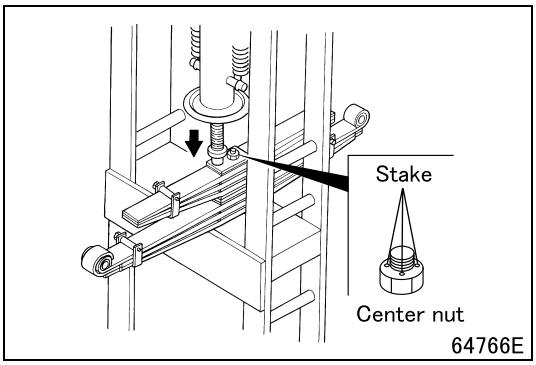

■ **Installation: Leaf spring**

- Pass the bolt to hold the leaf springs together.
- Stack the leaf springs tightly using a press and tighten the nut to the specified torque.
- After installing the nut, stake it at three locations.

M E M O

STABILIZER

<FE (except FE84DHW)>

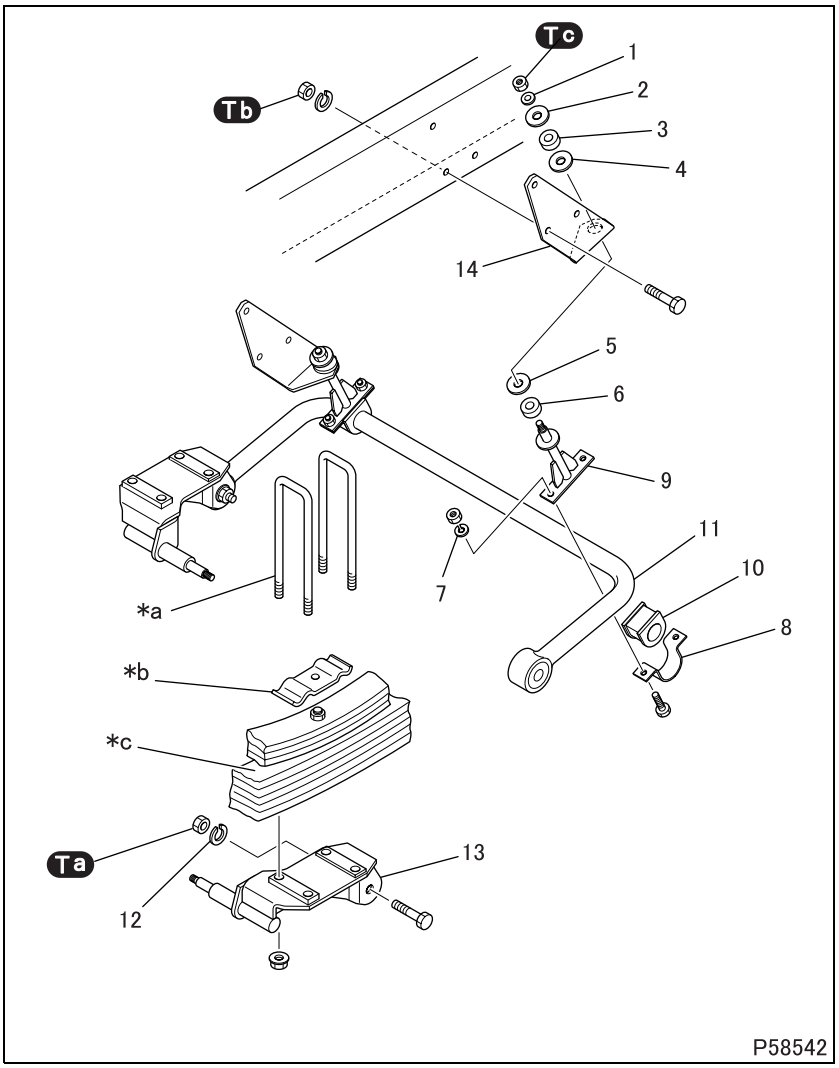

●Removal sequence

1 Washer
2 Seat
3 Bushing
4 Seat
5 Seat
6 Bushing
7 Washer
8 Clamp
9 Stabilizer hanger
10 Stabilizer bushing
11 Stabilizer bar
12 Washer
13 Stabilizer bracket lower
14 Stabilizer bracket upper

***a**: U-bolt
***b**: Spring pad
***c**: Leaf spring

●Installation sequence

Follow the removal sequence in reverse.

Tightening torque (Unit: N·m {ft.lbs, kgf·m})

Mark	Parts to be tightened	Tightening torque	Remarks
Ta	Nut (stabilizer bracket lower mounting)	410 to 550 {300 to 405, 41 to 56}	–
Tb	Nut (stabilizer bracket upper mounting)	130 to 180 {96 to 130, 13 to 18}	–
Tc	Nuts (stabilizer hanger mounting)	60 to 80 {44 to 59, 6.1 to 8.2}	–

◆Installation procedure◆

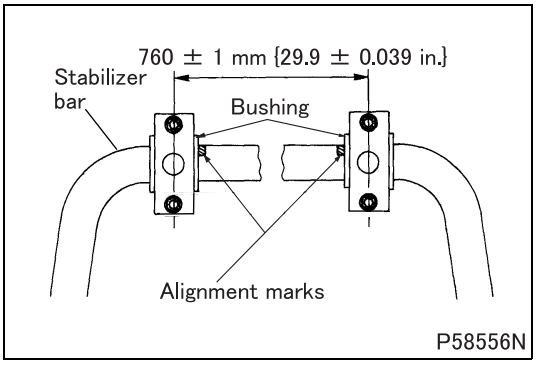

■ Installation: Stabilizer bushing

- Mount stabilizer bushings with their end surfaces aligned with marks on stabilizer bar.

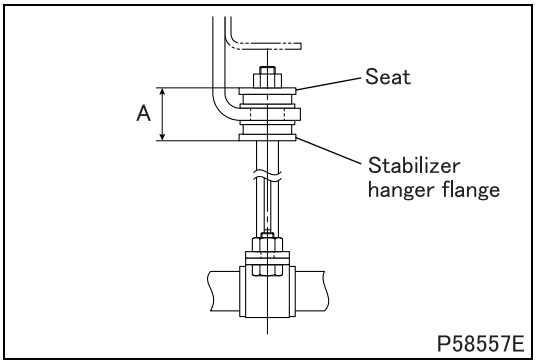

■ **Installation: Stabilizer hanger**

- Tighten the mounting nut until the part A in the illustration becomes the following dimension.
  A: 48.4 mm {1.89 in.}

STABILIZER

<FE84DHW>

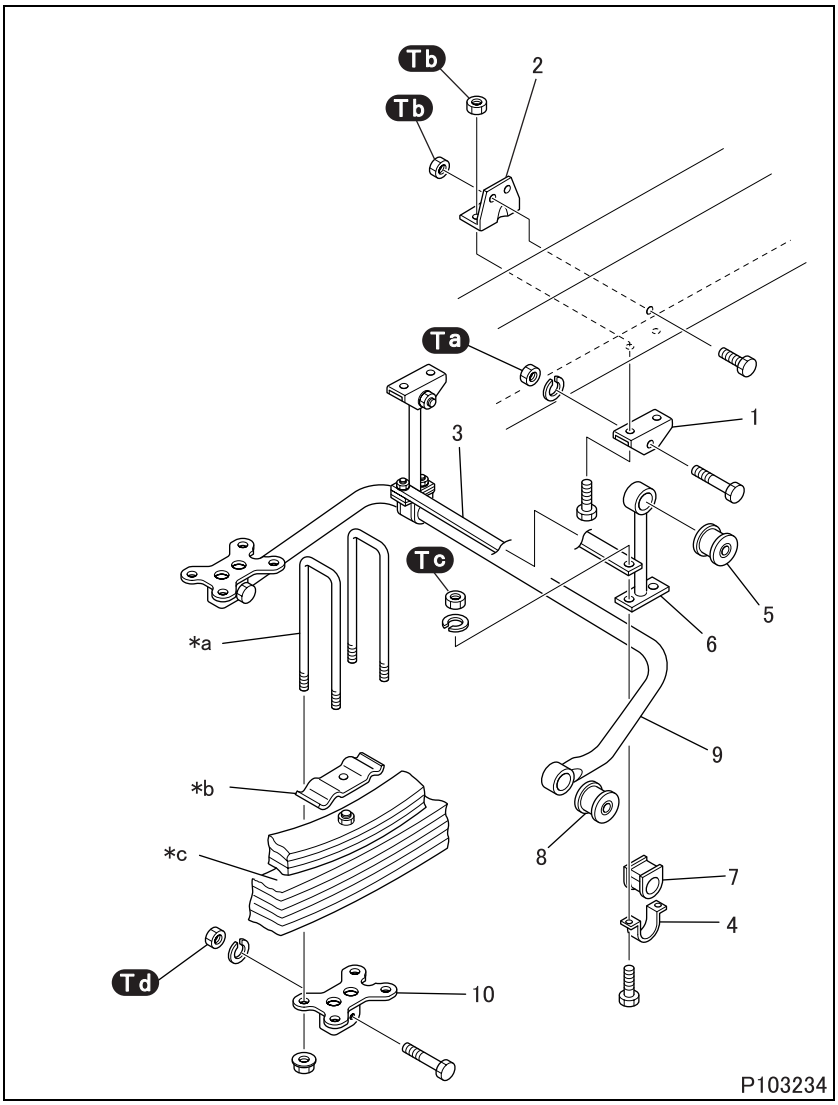

●Removal sequence

1 Stabilizer bracket upper
2 Stabilizer reinforcement
3 Plate
4 Clamp
5 Bushing
6 Stabilizer hanger
7 Stabilizer bushing
8 Bushing
9 Stabilizer bar
10 Stabilizer bracket lower

***a**: U-bolt
***b**: Spring pad
***c**: Leaf spring

●Installation sequence

Follow the removal sequence in reverse.

Tightening torque (Unit: N·m {ft.lbs, kgf·m})

Mark	Parts to be tightened	Tightening torque	Remarks
Ta	Nut (stabilizer hanger mounting)	70 to 95 {52 to 70, 7.0 to 9.5}	–
Tb	Nut (stabilizer reinforcement mounting)	39 to 60 {28 to 44, 3.9 to 6.0}	—
	Nut (stabilizer bracket upper mounting)		
Tc	Nut (plate, clamp and stabilizer hanger mounting)	12 to 15 {8.7 to 11, 1.2 to 1.5}	–
Td	Nut (stabilizer bracket lower mounting)	70 to 95 {52 to 70, 7.0 to 9.5}	–

◆Installation procedure◆

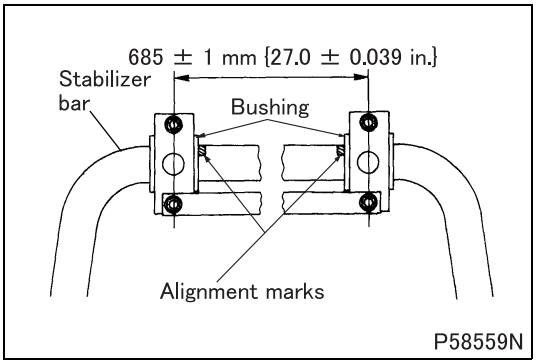

■ Installation: Stabilizer bushing

- Mount stabilizer bushings with their end surfaces aligned with marks on stabilizer bar.

Group 35A

Brake

Table of Contents

Back

Home

MITSUBISHI FUSO TRUCK OF AMERICA, Inc.

Pub.No.TWSE0713-35A

INDEX

SPECIFICATIONS 35A-2

STRUCTURE AND OPERATION
1. Brake System 35A-4
2. Vacuum Pump 35A-7
3. Vacuum Booster and Brake Master Cylinder <Except FE85> ... 35A-8
4. Hydraulic Booster and Brake Master Cylinder <FE85> 35A-14
5. Flow Priority Valve <FE85> 35A-20
6. Front Disc Brake <FE> 35A-21
7. Front Drum Brake <FG> 35A-22
8. Rear Disc Brake <FE> 35A-25
9. Rear Drum Brake <FG> 35A-26
10. Exhaust Brake System <FE> 35A-27

TROUBLESHOOTING 35A-30

ON-VEHICLE INSPECTION AND ADJUSTMENT
1. Replacement of Brake Fluid 35A-34
2. Air Bleeding of Brake System 35A-36
3. Inspection and Adjustment of Brake Pedal Free Play 35A-40
4. Inspection and Adjustment of Brake Pedal Pressed Height from Floor 35A-40
5. Inspection of Brake Pedal Full Stroke and Adjustment of Installed Height of Brake Pedal 35A-41
6. Inspection and Replacement of Disc Brake Pad <FE> 35A-42
7. Measurement of Disc Brake Drag Torque <FE> 35A-45
8. Inspection of Drum Brake Lining Thickness <FG> 35A-45
9. Initial Setting of Clearance between Brake Drum and Shoe <FG> 35A-46
10. Inspection of Check Valve in Vacuum Line Hose 35A-47
11. Inspection of Vacuum Pump 35A-47
12. Inspection of Vacuum Booster <Except FE85> 35A-48
13. Inspection of Hydraulic Booster <FE85> 35A-53

VACUUM PUMP..... 35A-55

BRAKE MASTER CYLINDER
<WITH VACUUM BOOSTER> 35A-56
<WITH HYDRAULIC BOOSTER> 35A-60

BRAKE PEDAL & VACUUM BOOSTER, HYDRAULIC BOOSTER..... 35A-62

FRONT DISC BRAKE
<ϕ235 mm {9.25 in.} DISC>.....35A-64
<ϕ252 mm {9.92 in.} DISC>.....35A-68

FRONT DRUM BRAKE 35A-72

REAR DISC BRAKE
<ϕ235 mm {9.25 in.} DISC>.....35A-78
<ϕ252 mm {9.92 in.} DISC>.....35A-80

REAR DRUM BRAKE 35A-82

EXHAUST BRAKE SYSTEM 35A-88

SPECIFICATIONS

Vacuum Booster and Brake Master Cylinder

Item				Specifications	
				FE (except FE85)	FG
Vacuum booster	Boosting type			Vacuum tandem type	
	Diaphragm diameter		inch	ϕ9 + ϕ10	ϕ8 + ϕ9
	Manufacturer			Bosch	
Brake master cylinder	Inner diameter		mm {in.}	ϕ31.75 {1.25}	ϕ30.16 {1.19}
	Stroke	Front	mm {in.}	16.0 {0.63}	17.4 {0.69}
		Rear	mm {in.}	16.0 {0.63}	14.6 {0.57}
	Manufacturer			NISSIN KOGYO	

Hydraulic Booster and Brake Master Cylinder

Item				Specifications
				FE85
Hydraulic booster	Boosting type			Hydraulic type
	Manufacturer			Bosch
Brake master cylinder	Inner diameter		mm {in.}	ϕ33.34 {1.31}
	Stroke	Front	mm {in.}	17.5 {0.69}
		Rear	mm {in.}	16.0 {0.63}
	Manufacturer			Bosch

Front Disc Brake

Item		Specifications	
		FE83, FE84	FE85
Brake type		Twin caliper type	
Effective diameter for braking	mm {in.}	ϕ235 {9.25}	ϕ252 {9.92}
Disc rotor outer diameter × thickness	mm {in.}	ϕ293 × 40 {11.5 × 1.57}	ϕ310 × 40 {12.2 × 1.57}
Caliper piston inner diameter	mm {in.}	ϕ51.1 {2.01}	ϕ54 {2.13}
Thickness of pad	mm {in.}	14 {0.55}	14 {0.55}

Front Drum Brake

Item		Specifications
		FG
Brake type		2-leading type (with auto adjuster)
Wheel cylinder inner diameter	mm {in.}	ϕ31.75 {1.25}
Brake drum inner diameter	mm {in.}	ϕ320 {12.6}
Brake lining width × thickness	mm {in.}	75 × 8.8 {2.95 × 0.35}

Rear Disc Brake

Item		Specifications	
		FE83, FE84	FE85
Brake type		Twin caliper type	
Effective diameter for braking	mm {in.}	ϕ235 {9.25}	ϕ252 {9.92}
Disc rotor outer diameter × thickness	mm {in.}	ϕ293 × 40 {11.5 × 1.57}	ϕ310 × 40 {12.2 × 1.57}
Caliper piston inner diameter	mm {in.}	ϕ51.1 {2.01}	ϕ54 {2.13}
Thickness of pad	mm {in.}	14 {0.55}	14 {0.55}

Rear Drum Brake

Item		Specifications
		FG
Brake type		Dual 2-leading type (with auto adjuster)
Wheel cylinder inner diameter	mm {in.}	ϕ28.57 {1.12}
Brake drum inner diameter	mm {in.}	ϕ320 {12.6}
Brake lining width × thickness	mm {in.}	75 × 8.8 {2.95 × 0.35}

Vacuum Pump

Item		Specifications
Type		Vane type
Output	cm^3 {cu.in.}	60 {3.66}
Manufacturer		MITSUBISHI ELECTRIC

Exhaust Brake

Item		Specifications
		FE
Control type		Combined electric and vacuum control
Valve type		Butterfly valve type

1. Brake System

1.1 Brake fluid line

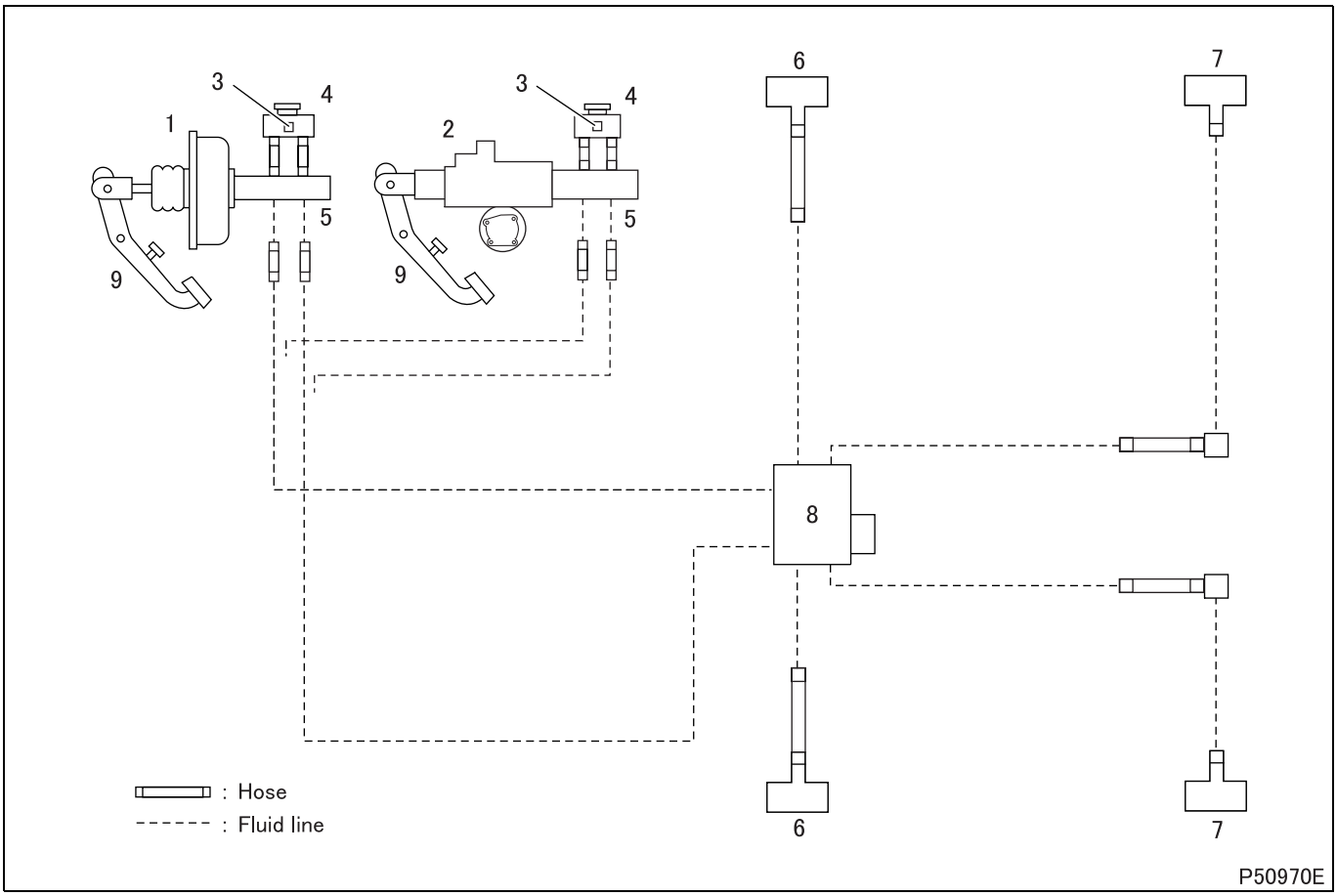

1 Vacuum booster <Except FE85>
2 Hydraulic booster <FE85>
3 Brake fluid level switch
4 Brake fluid tank
5 Brake master cylinder
6 Front wheel brake
7 Rear wheel brake
8 Hydraulic unit (anti-lock brake system)
9 Stop lamp switch

- The brake system incorporating the vacuum booster uses vacuum to provide servo-assisted braking to all wheels of the vehicle onto which it is mounted. <Except FE85>
- The brake system incorporating the hydraulic booster uses the power steering oil pump pressure to provide servo-assisted braking to all wheels of the vehicle onto which it is mounted. <FE85>

1.2 Vacuum booster line <Except FE85>

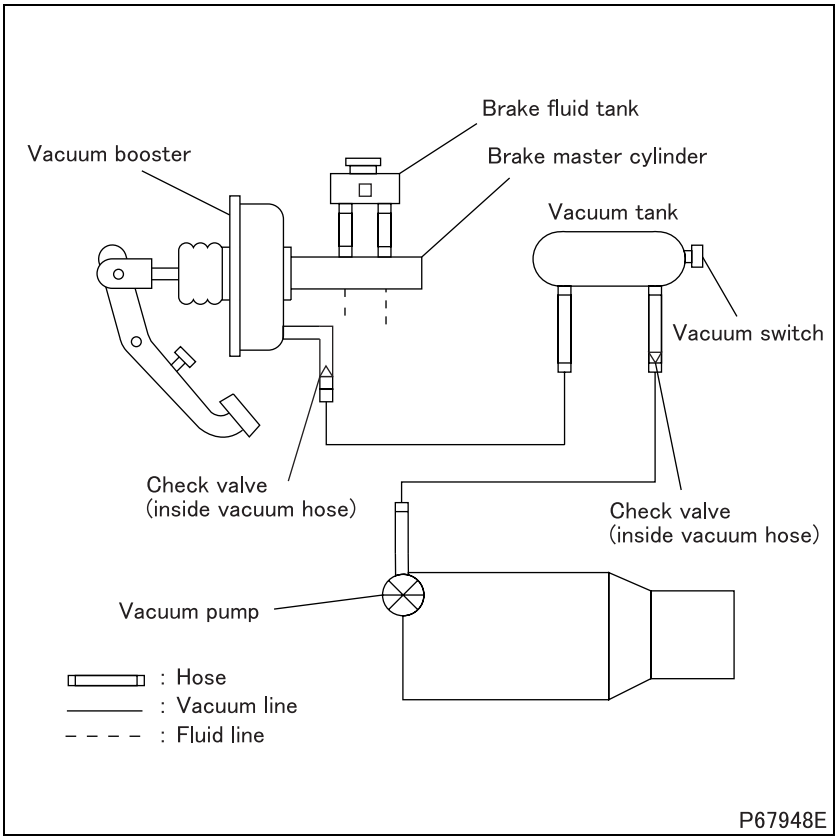

1.3 Hydraulic booster line <FE85>

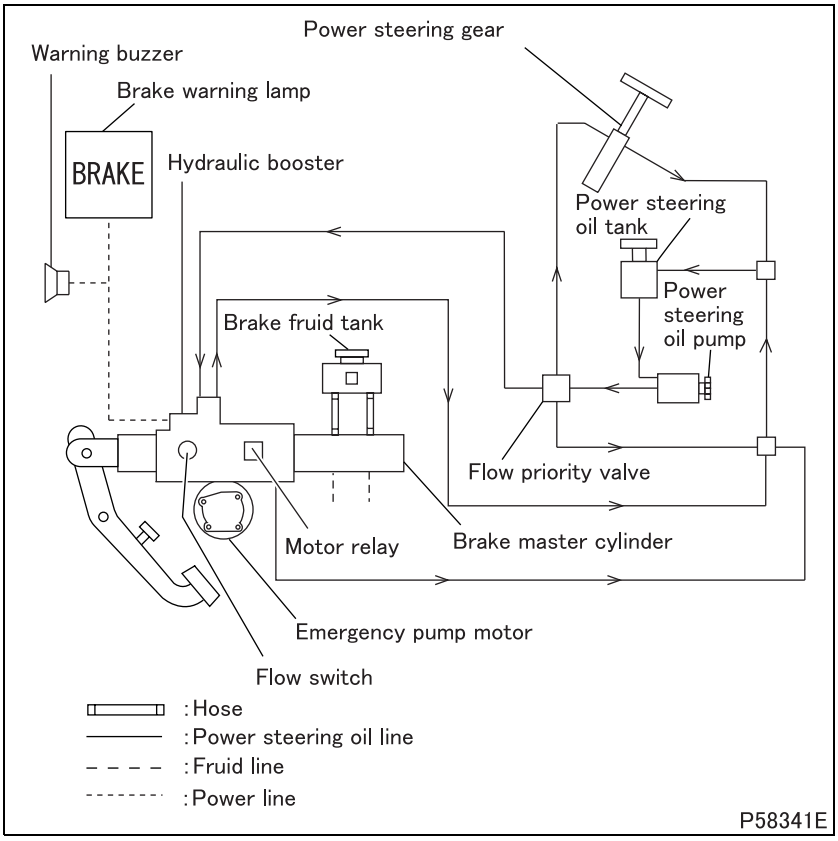

- The stepping force applied on the brake pedal is boosted by the hydraulic booster which operates on the pressure provided by the power steering oil pump.
- When brakes are applied hard while the steering wheel is turned, the associated steering shock is dampened by the flow priority valve in the system.
- When engine stall, power steering oil pump failure, or oil leakage from the power steering line causes oil pressure to drop, the flow switch detects this. This causes the motor relay to switch over, providing power to the emergency pump motor which then turns to generate emergency oil pressure.

- The emergency pump motor operates only when the brake pedal is pressed. The motor has various operating modes, as summarized below.

Starter switch	Engine	Parking switch	Warning		Power steering oil pressure	Emergency pump motor O: ON ×: OFF	Vehicle state
			Brake warning lamp O: ON ×: OFF	Warning buzzer O: ON ×: OFF			
ON	Run	ON (pulled)	O	×	Available	×	Normal
			O	×	Not available	O	* Oil leakage from power steering line
		OFF (released)	×	×	Available	×	Normal
			O	O	Not available	O	* Oil leakage from power steering line
	Stop	ON (pulled)	O	×		O	At engine start
						O	Engine stalled at uphill start
		OFF (released)	O	O		O	Engine stall
OFF		ON (pulled)	×	×		O	Vehicle moved after parked (parking brake lever pulled insufficiently)
		OFF (released)	×	×		O	Engine stopped before vehicle came to complete halt

*: The failsafe feature of the hydraulic booster cuts off oil supply to the power steering line to maintain oil pressure.

2. Vacuum Pump

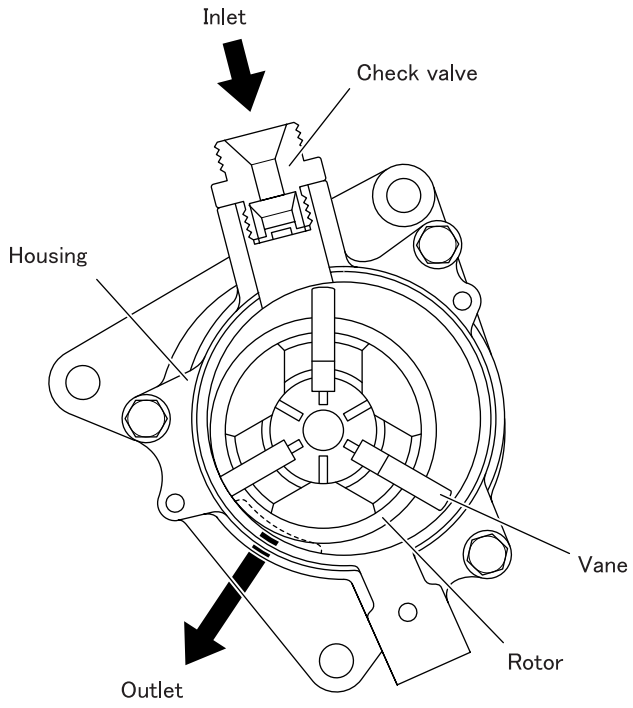

P58342E

- The vacuum pump is mounted onto the timing gear case, and is driven by the idler gear.
- The check valve is provided to ensure that no air or engine oil flow from the vacuum pump back to the vacuum tank when the engine is stationary.

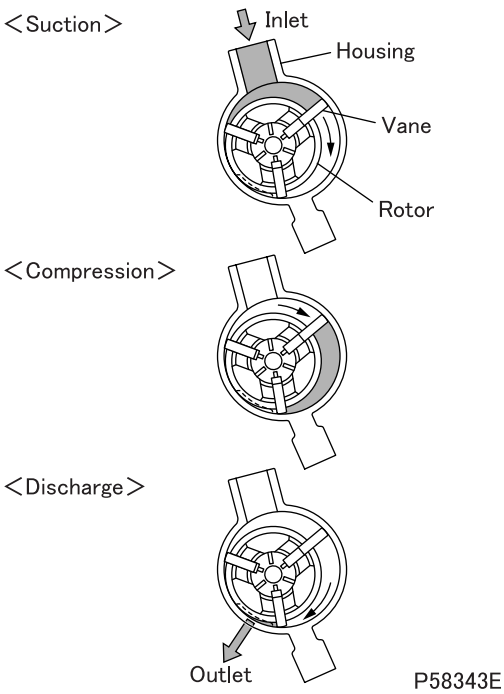

P58343E

2.1 Operation

- A rotor with 3 movable vanes is housed in a cylindrical housing. As the rotor rotates, the vanes are pressed against the inner face of the housing by centrifugal force.
- The rotor is eccentrically mounted relative to the housing. As the rotor rotates, air in the vacuum tank is sucked through the pump inlet and then compressed before being discharged through the outlet. The suction-compression-discharge cycle is repeated to generate vacuum in the vacuum tank.
- The inside of the housing is lubricated and cooled by engine oil. After lubrication/cooling, the engine oil together with the compressed air is returned through the pump outlet and into the oil pan.

3. Vacuum Booster and Brake Master Cylinder <Except FE85>

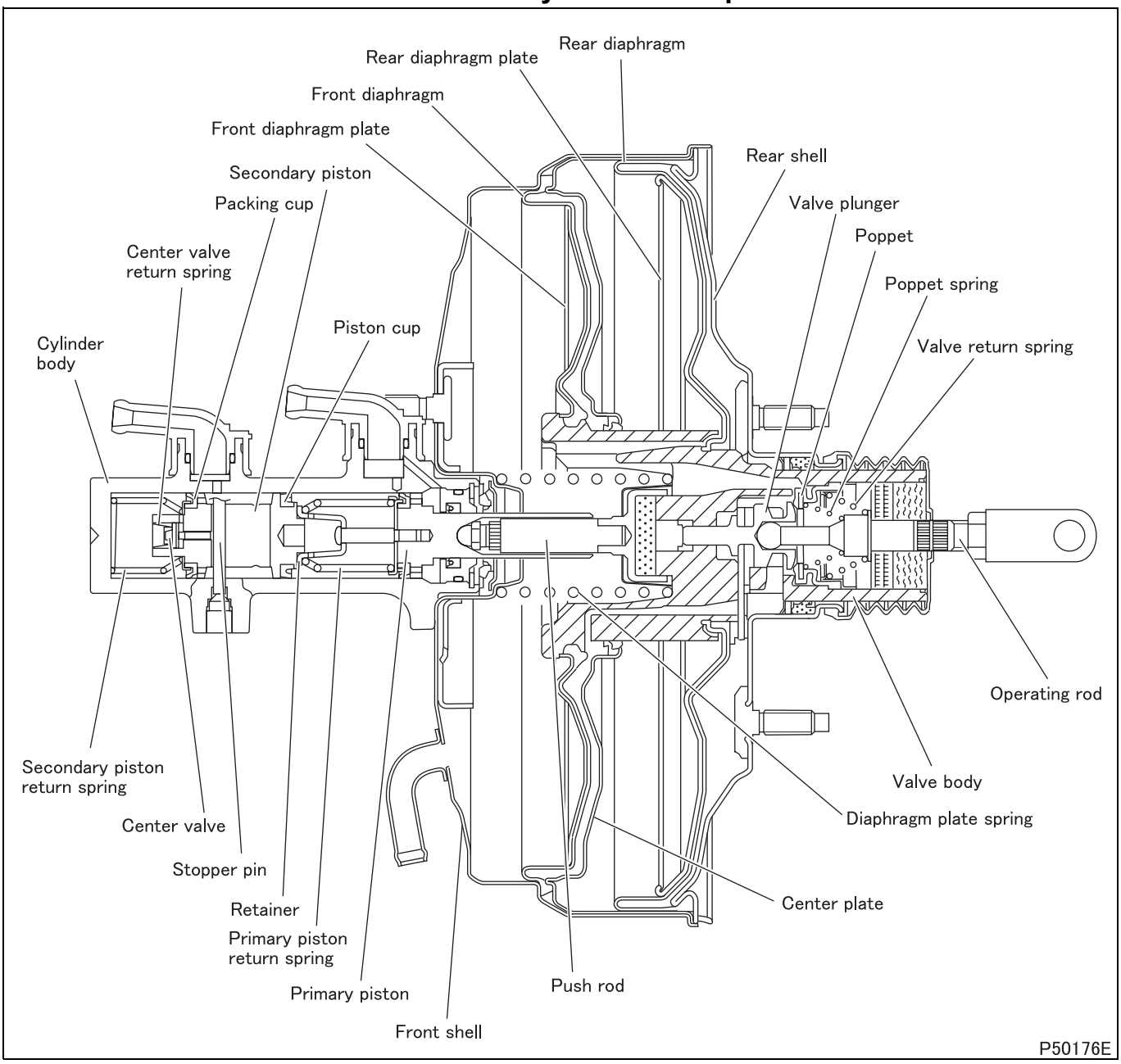

- The vacuum booster magnifies the stepping force applied onto the brake pedal (therefore reduces the operator's pedal effort) through the utilization of pressure difference between the vacuum it generates and the atmospheric pressure. The system is of a tandem type and has 2 vacuum chambers, achieving size reduction while offering a great capacity for highly efficient boosting performance.
- The brake master cylinder serves both the front and rear brake systems that are independent of each other. Should fluid leakage occur in either the front or rear brake system, stopping power can still be provided by whichever system is intact.

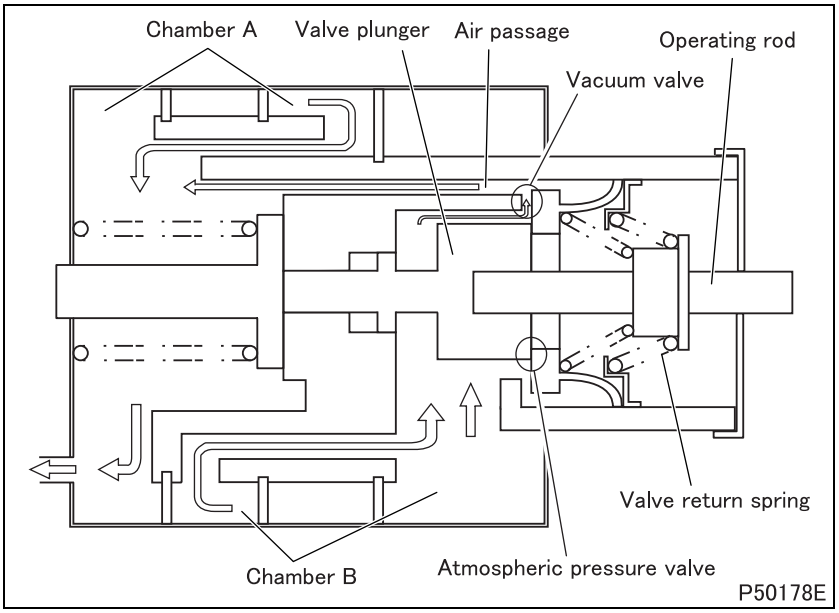

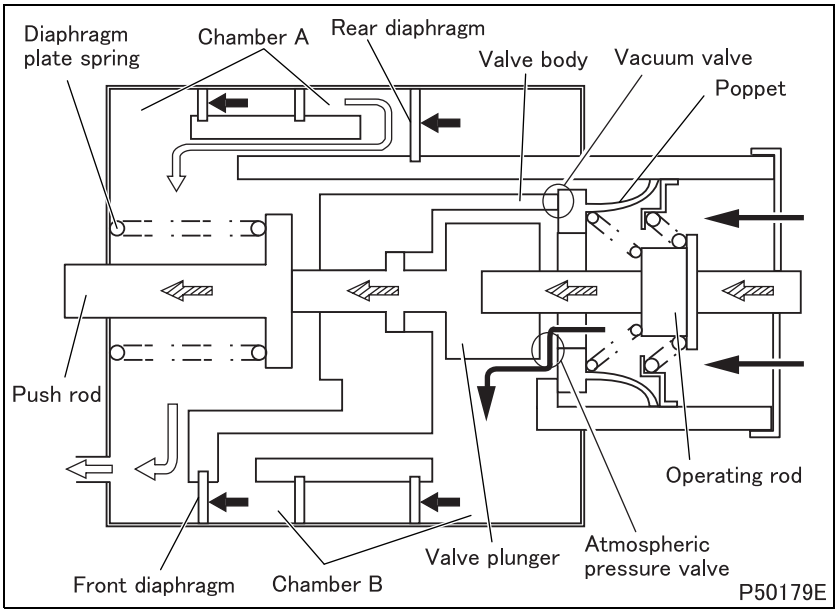

3.1 When brake pedal is pressed

(1) Vacuum booster operation

- With the brake pedal released and no stepping force applied to the brake pedal, the operating rod and the valve plunger are held to the right by the force of the valve return spring. The atmospheric pressure valve remains closed while the vacuum valve remains open.
- The vacuum pump creates vacuum in chamber A. As the atmospheric pressure valve is closed, no outside air flows into chamber B. Instead, vacuum in chamber A flows through the air passage and into chamber B. Chambers A and B are both filled with vacuum, and there is no pressure difference between the chambers. No boosting occurs.
- As the brake pedal is pressed, the stepping force acts on the operating rod. This seats the poppet onto the valve body, closing the vacuum valve and cutting off vacuum supply into chamber B. As the brake pedal is pressed further, the valve plunger separates from the poppet. This opens the atmospheric pressure valve, allowing outside air into chamber B. There is now a pressure difference between chambers A and B.
- The stepping force, boosted as a result of the pressure difference between chambers A and B, overcomes the force of the diaphragm plate spring, pushing the front and rear diaphragms and the push rod to operate the brake master cylinder.

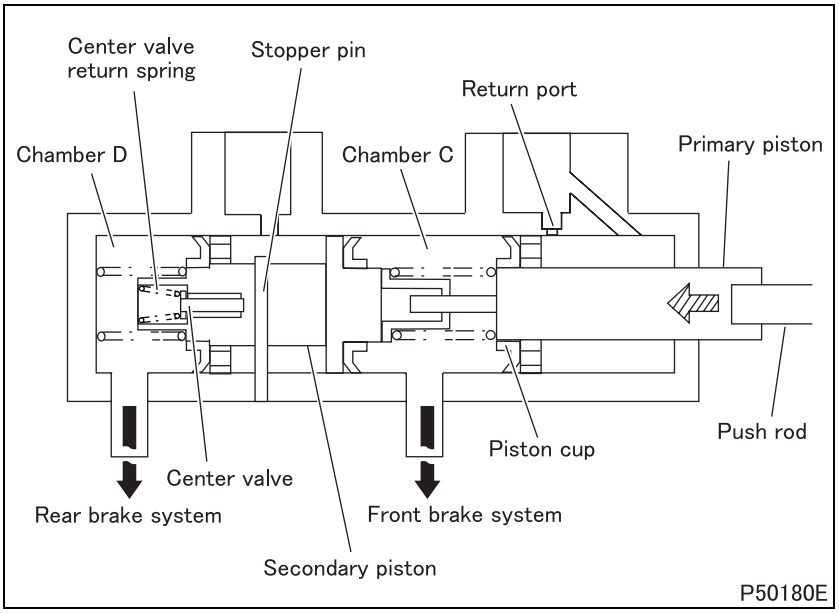

(2) Brake master cylinder operation

- As the push rod pushes the primary piston, the return port is closed by the piston cup. Fluid pressure now builds up in chamber C.
- The pressure buildup is sent to the front brake system and at the same time pushes the secondary piston.
- The center valve in front of the secondary piston separates from the stopper pin. The center valve return spring now closes the center valve, seating it onto the secondary piston.
- Fluid pressure now builds up in chamber D in front of the secondary piston, and the pressure is sent to the rear brake system.

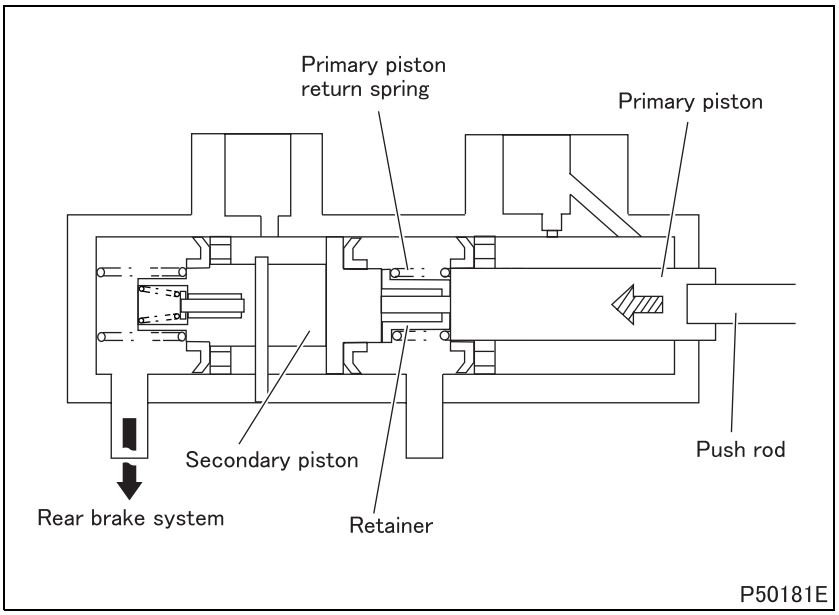

3.2 Fluid leakage in front brake system

- As the brake pedal is pressed, the push rod moves to push the primary piston. As there is fluid leakage in the front brake system, no fluid pressure builds up in that system.
- As the brake pedal is pressed further, the primary piston overcomes the force of the primary piston return spring and, via the retainer, pushes the secondary piston. Fluid pressure is now sent to the rear brake system.

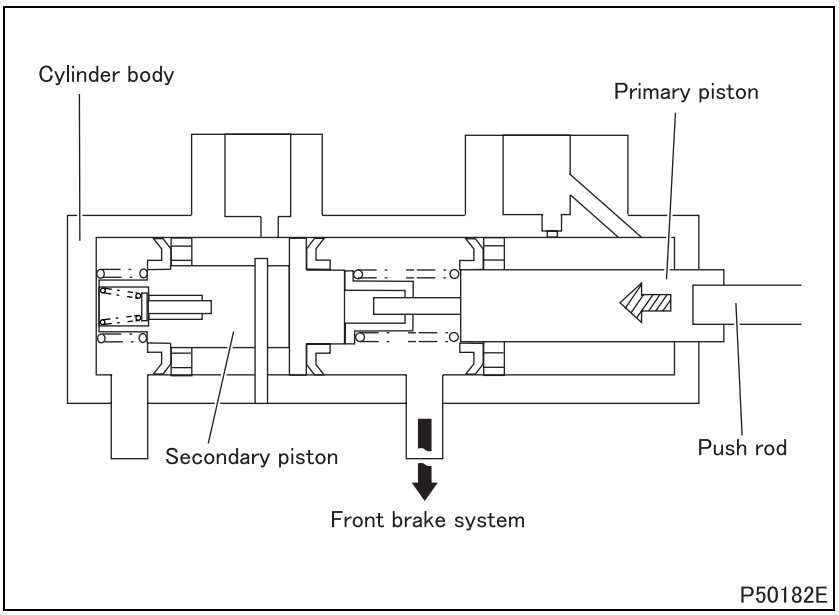

3.3 Fluid leakage in rear brake system

- As the brake pedal is pressed, the push rod moves to push the primary and secondary pistons. As there is fluid leakage in the rear brake system, no pressure builds up in that system.
- As the brake pedal is pressed further, the tip of the secondary piston contacts the cylinder body while the primary piston continues to be pushed. Fluid pressure builds up further in the front brake system.

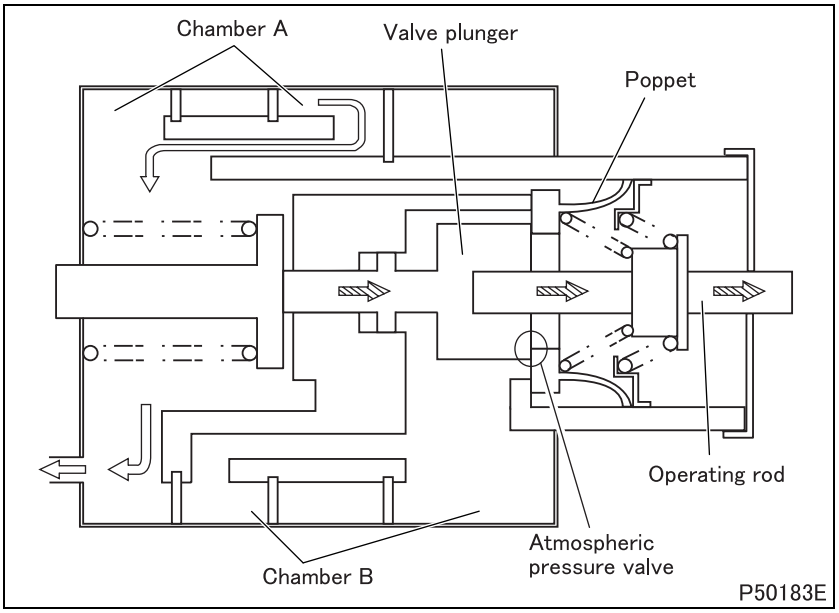

3.4 When brake pedal is released

(1) Vacuum booster operation

- With the brake pedal pressed, chamber A is filled with vacuum generated by the vacuum pump while chamber B is open to the atmosphere. When the brake pedal is released, the stepping force no longer acts on the operating rod. This causes the valve plunger to seat on the poppet, closing the atmospheric pressure valve and cutting off air flow into chamber B.

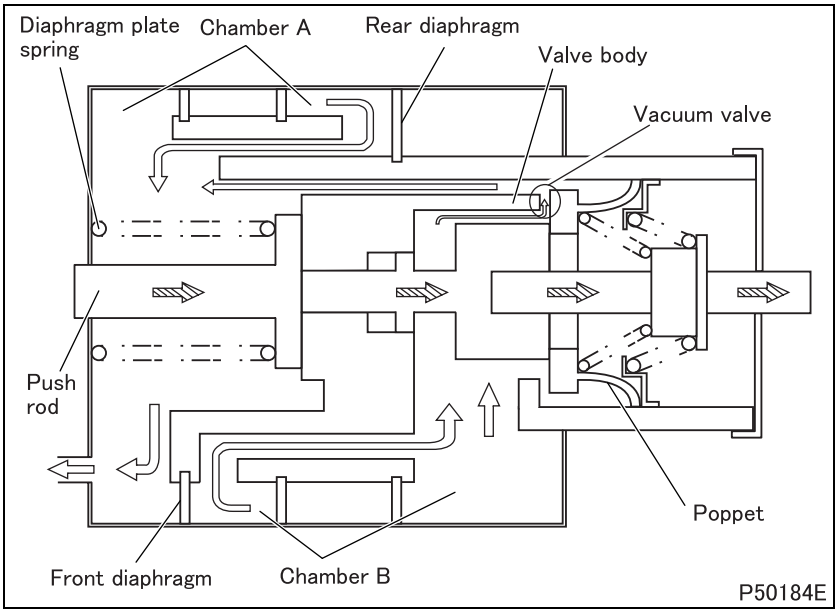

- In further progression, the poppet separates from the valve body. This opens the vacuum valve, allowing vacuum from the vacuum pump to flow into chamber B. As there is now no pressure difference between chambers A and B, the diaphragm plate spring pushes back the front and rear diaphragms and also the push rod to their original positions.

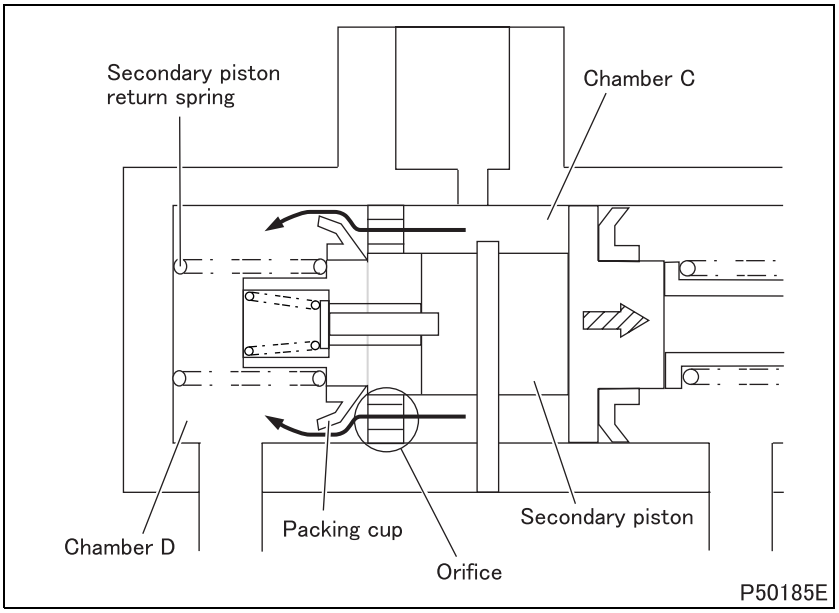

(2) Brake master cylinder operation

- As the push rod returns to its original position, the secondary piston immediately starts to be pushed back by the force of the secondary piston return spring. The speed of return is gradual as there is no difference between chambers C and D in fluid pressure supplied by the brake master cylinder.
- As the secondary piston starts to return to its original position, the pressure in chamber D becomes lower than the pressure in chamber C. The pressure difference causes the packing cup to buckle, allowing the fluid pressure in chamber C to flow through the orifices and into chamber D.

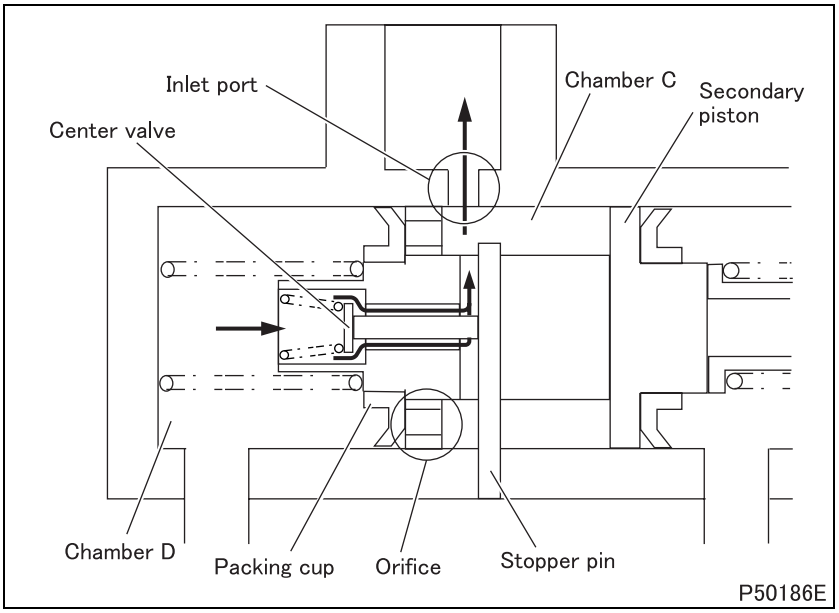

- With the secondary piston back in its original position, there is no difference in fluid pressure between chambers C and D. The packing cup restores its original shape, blocking the orifices. The liquid pressure in the brake line now flows through the center valve, which has been open since hitting the stopper pin. The liquid pressure then returns through the inlet port to the brake fluid tank.

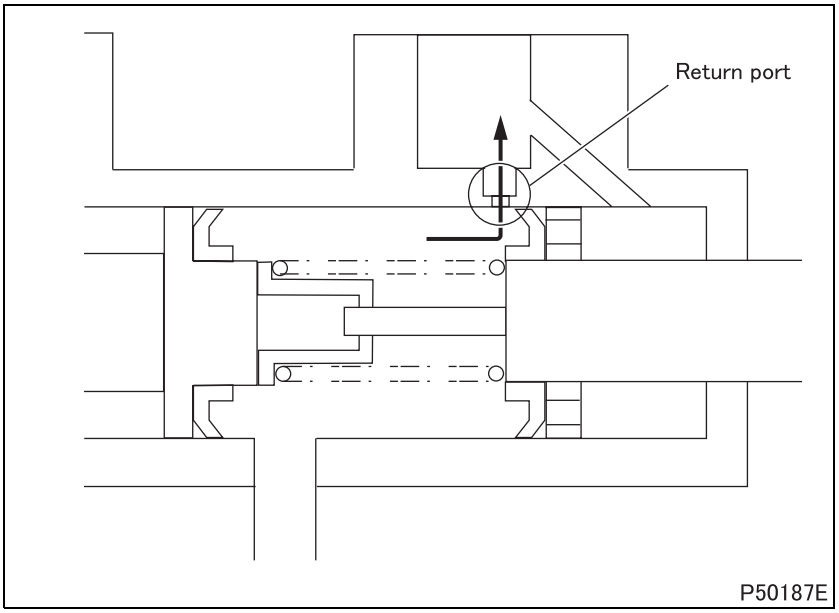

- The fluid pressure in the primary (front) brake line returns through the return port to the brake fluid tank.

M E M O

4. Hydraulic Booster and Brake Master Cylinder <FE85>

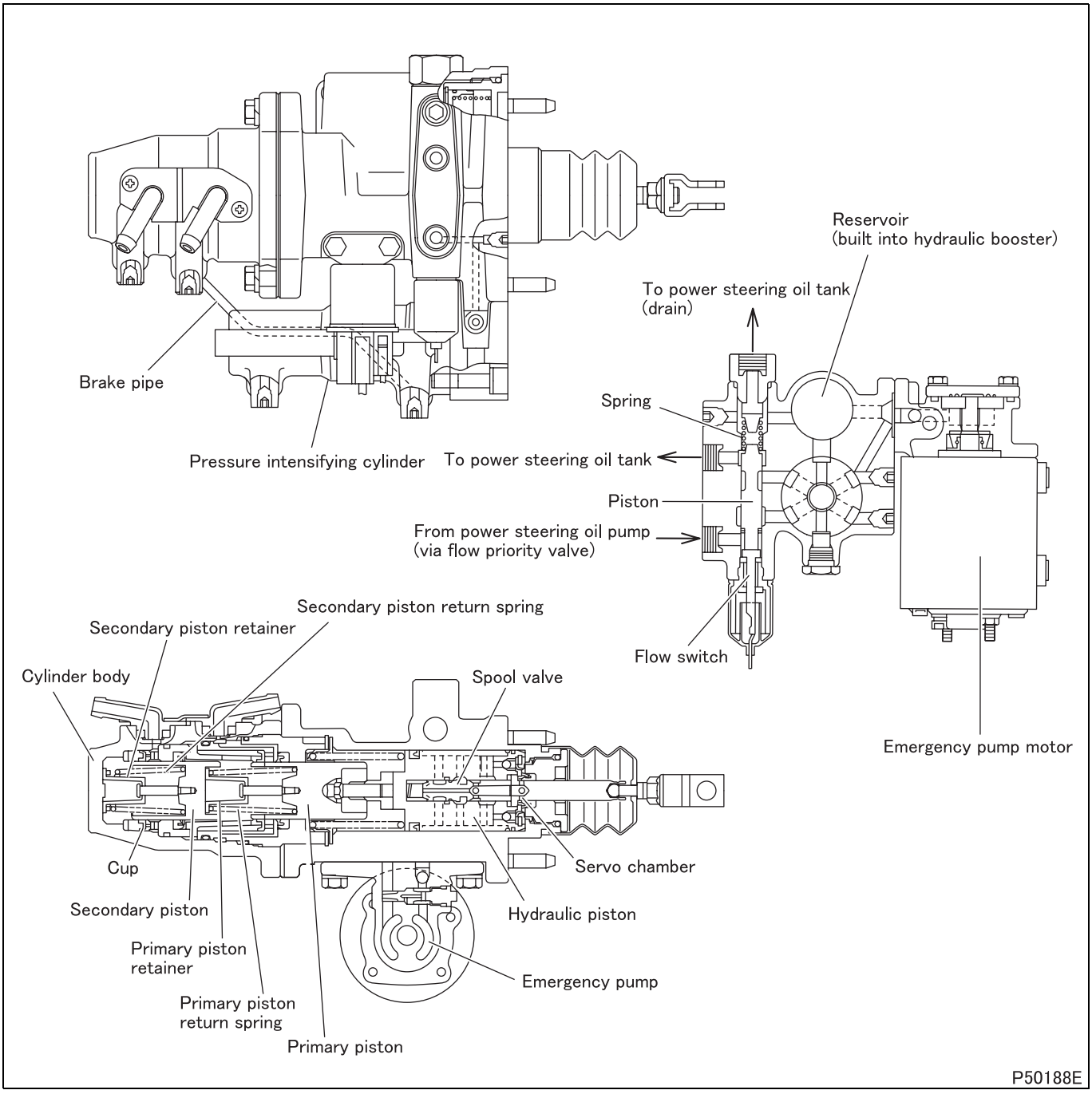

- The hydraulic booster magnifies the stepping force applied onto the brake pedal (therefore reduces the operator's pedal effort) through the utilization (via the flow priority valve) of the steering pump pressure.
- The brake master cylinder serves both the front and rear brake systems that are independent of each other. Should fluid leakage occur in either the front or rear brake system, stopping power can still be provided by whichever system is intact.
- The spool valve is connected to the brake pedal, and generates oil pressure proportional to the pedal stepping force.
- The hydraulic piston, which is connected to the brake master cylinder, operates to store oil supplied via the spool valve into the servo chamber for pressure boost.
- Should oil pressure is lost, the piston is pushed to the left by the force of the spring, blocking oil flow from the power steering oil pump and to the power steering oil tank. At the same time, the flow switch is turned ON, providing power to the emergency pump motor. The emergency pump generates oil pressure for the hydraulic booster to continue to operate.

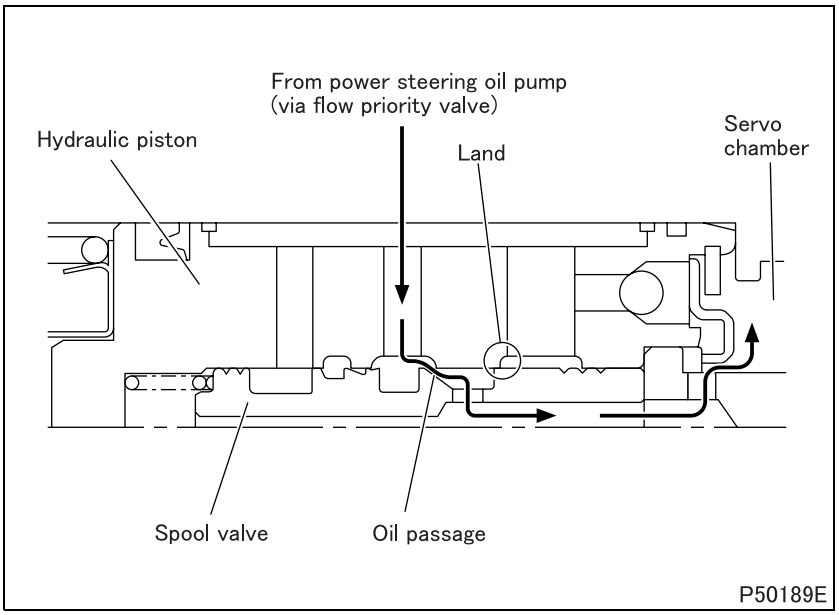

4.1 Spool valve

(1) When brake pedal is pressed

- As the brake pedal is pressed, the spool valve moves to the left, closing the land.
- Oil pressure from the flow priority valve builds up.
- The high pressure oil flows through the oil passage and into the servo chamber.
- The hydraulic piston is pushed to the left.
- The pistons in the brake master cylinder are moved, supplying pressure for brake application.

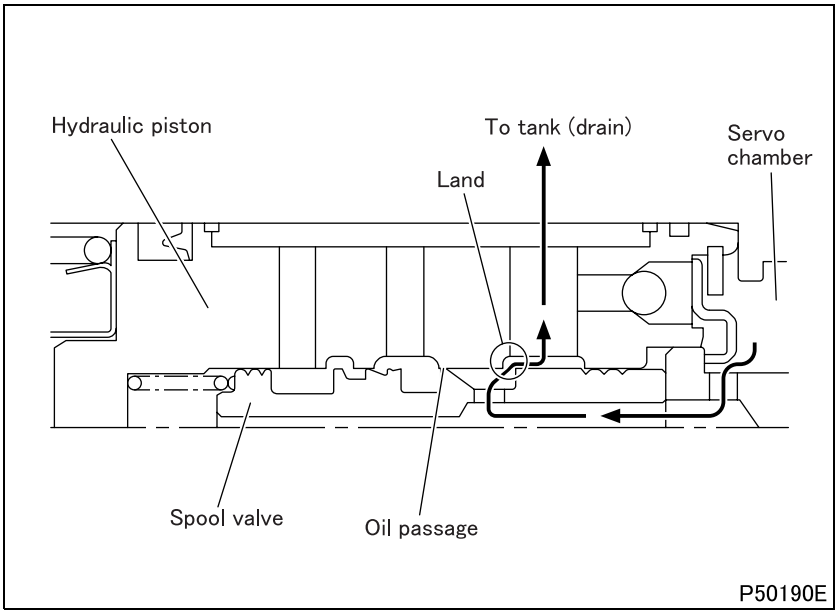

(2) When brake pedal is released

- As the brake pedal is released, the spool valve moves to the right. This opens the land while the oil passage is closed.
- Oil pressure from the flow priority valve drops.
- The oil in the servo chamber drains to the tank as well as to the reservoir.
- The hydraulic piston returns to its original position.
- Pressure acting on the pistons in the brake master cylinder is released.

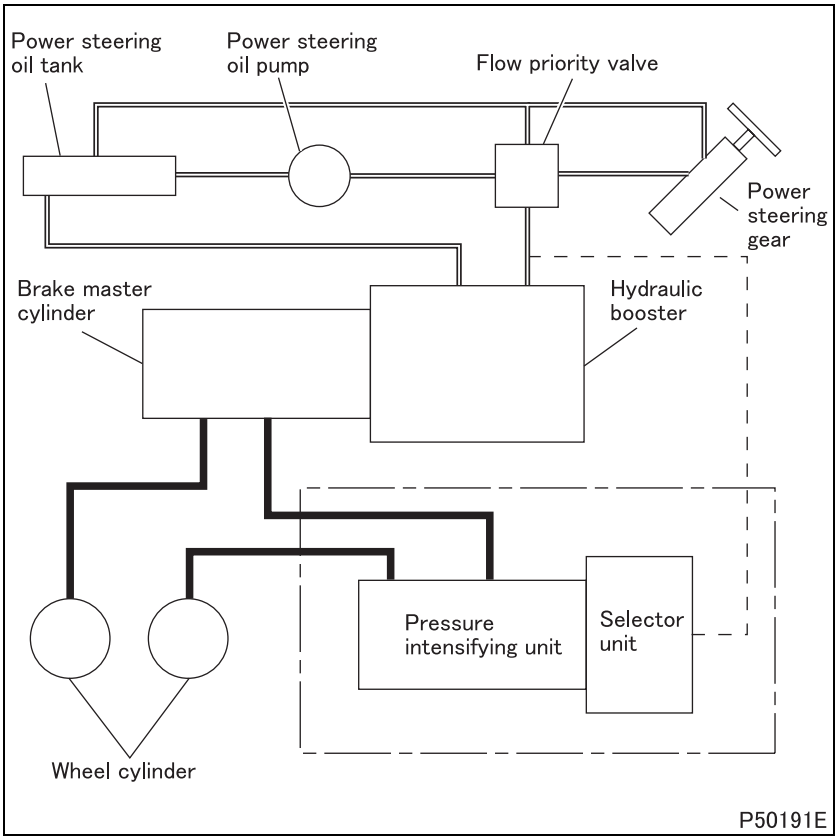

4.2 Pressure intensifying cylinder system

- The pressure intensifying cylinder system is attached onto the hydraulic booster which operates on the power steering oil pump pressure.
- Should the pump fail, pressing the brake pedal causes the system to boost the fluid pressure from the brake master cylinder and send it to the wheel cylinders.

(1) Pressure intensifying cylinder

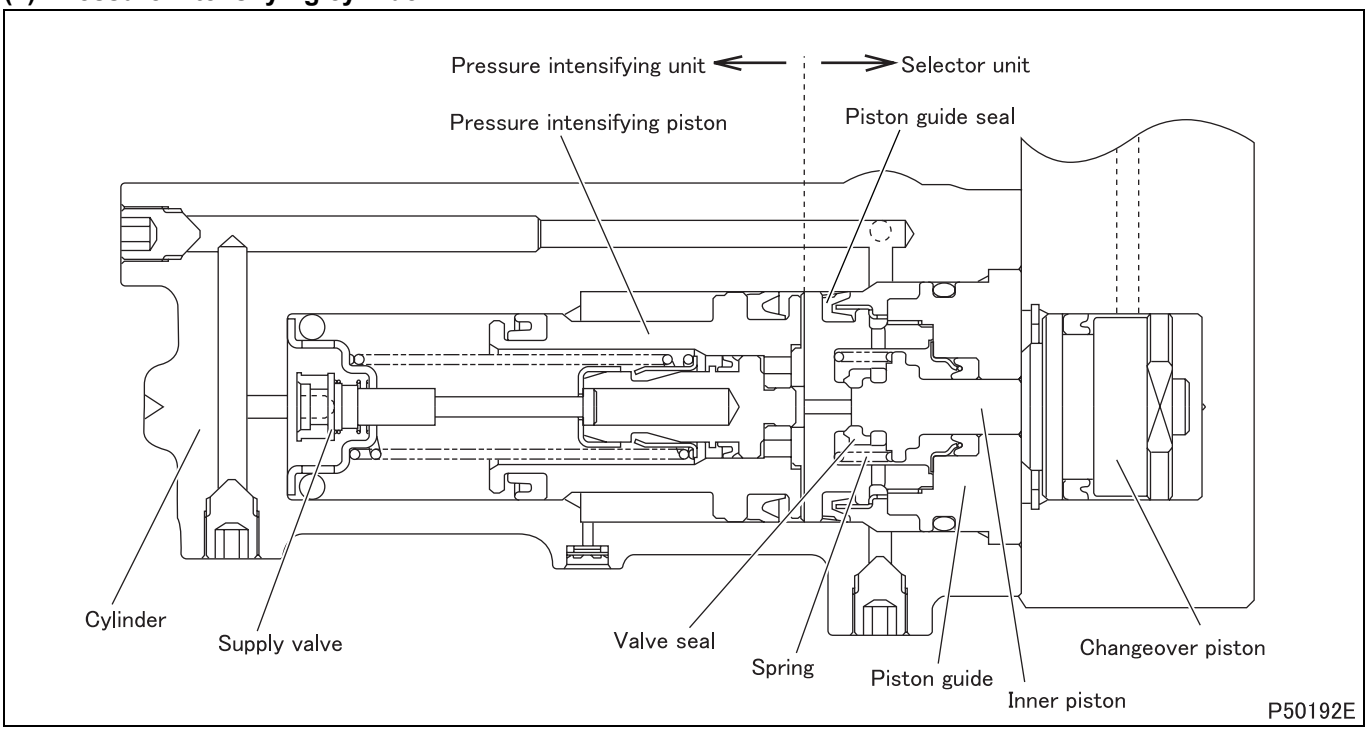

- Should the power steering pump fail to discharge oil, the selector unit detects this. The unit also ensures that pressure not be intensified when the power steering pump is functioning normally.
- Should the power steering pump fail, the pressure intensifying unit comes into action, boosting the fluid pressure from the brake master cylinder before sending it to the wheel cylinders.

(1.1) When not in operation (power steering pump operating normally)

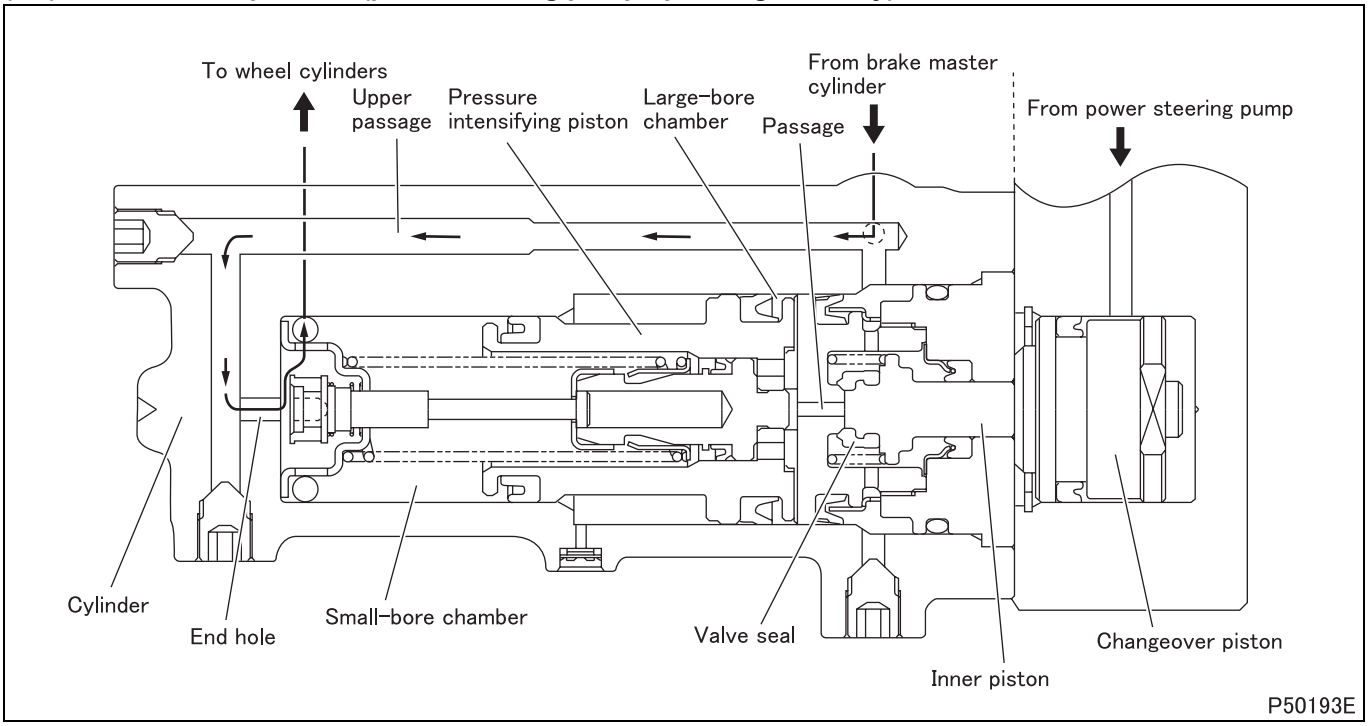

- Power steering oil pump pressure pushes the changeover piston, which then moves the inner piston. As a result, the passage to the large-bore chamber is blocked by the valve seal. Fluid pressure from the brake master cylinder flows through the upper passage, the end hole, the small-bore chamber, and into the wheel cylinders. As fluid pressure acts only on the small-bore end of the pressure intensifying piston, the piston remains in the same position.

(1.2) When in operation (power steering pump failure)

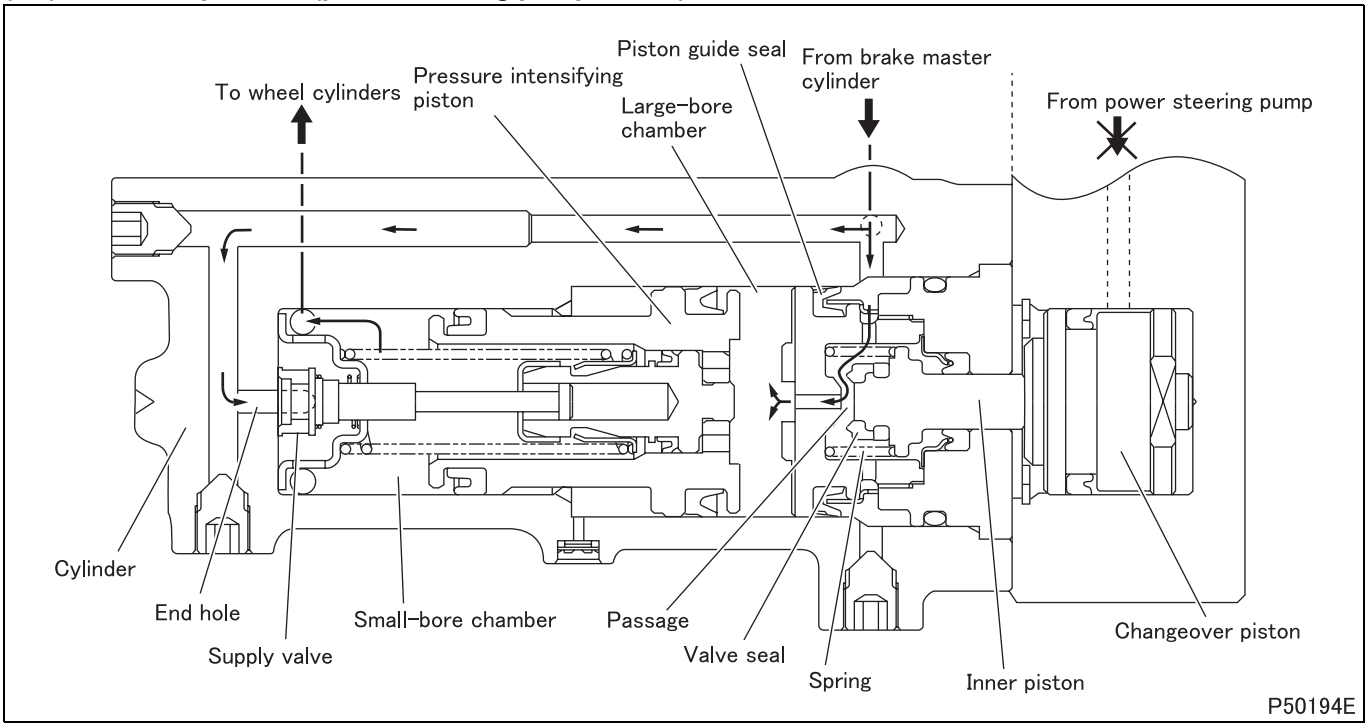

- When the power steering oil pump fails to discharge oil, the spring at the end of the inner piston pushes back the inner and changeover pistons. This opens up the passage through the valve seal into the large-bore chamber.
- Fluid pressure from the brake master cylinder flows into both the large- and small-bore chambers. As the large-bore end of the pressure intensifying piston has a larger area than the small-bore end, the piston moves to the left. As a result, the end hole is blocked by the supply valve.

- The brake master cylinder continues to supply fluid into the pressure intensifying cylinder, which in turn sends the increasing pressure to the wheel cylinders.
- When the brake pedal is released, pressure fluid in the large-bore chamber flows through the valve seal, the back of the piston guide seal, and to the brake master cylinder.

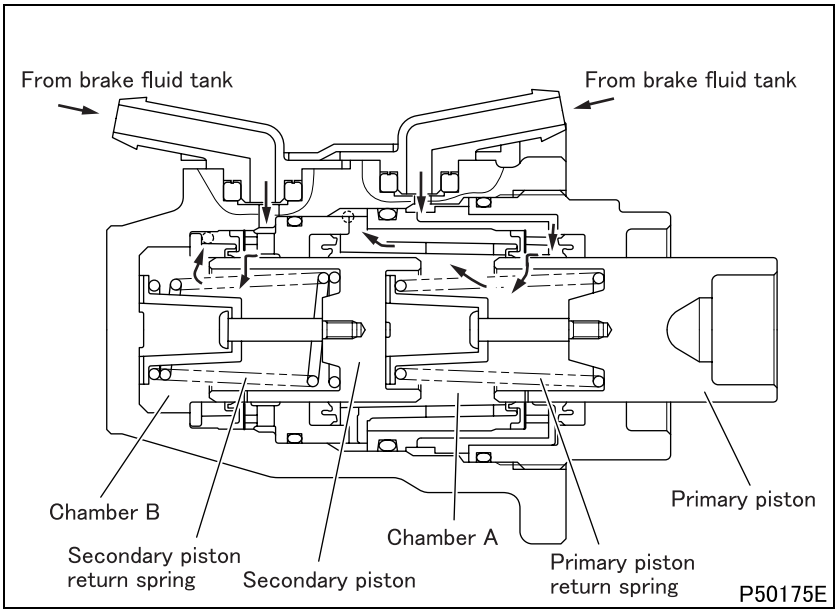

4.3 Brake master cylinder

(1) When not in operation

- With the brake pedal released, the primary and secondary pistons are held to the right by the forces of the primary and secondary piston return springs respectively.
- Chambers A and B are open to the brake fluid tank.

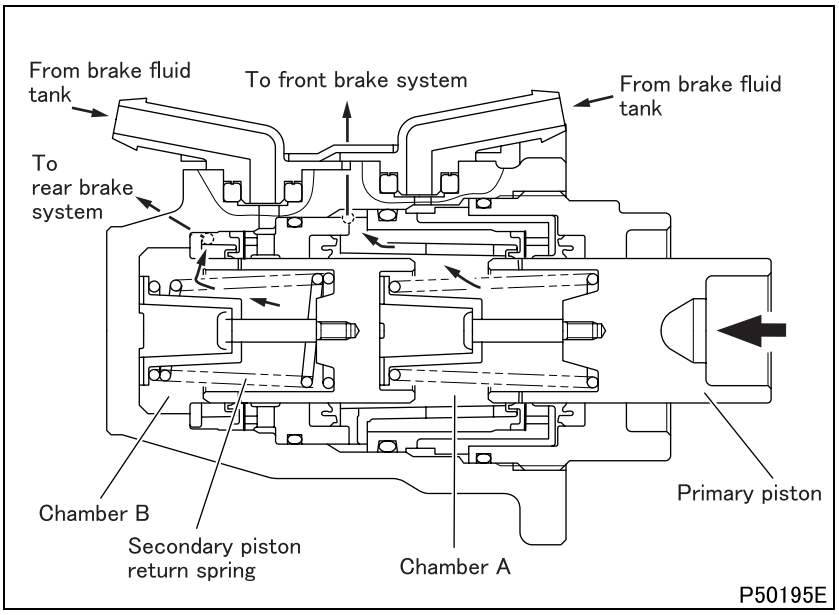

(2) When brake pedal is pressed

- As the brake pedal is pressed, the primary piston is pushed via the push rod.
- The secondary piston return spring is compressed, and the passages from chambers A and B to the brake fluid tank are blocked.
- As the brake pedal is pressed further, the primary piston is pushed. Fluid pressure builds up in chambers A and B, and is sent to the front and rear brake systems respectively.
- When fluid leakage occurs in either the front or rear brake system, the master cylinder operates basically in the same manner as the master cylinder with the vacuum booster.

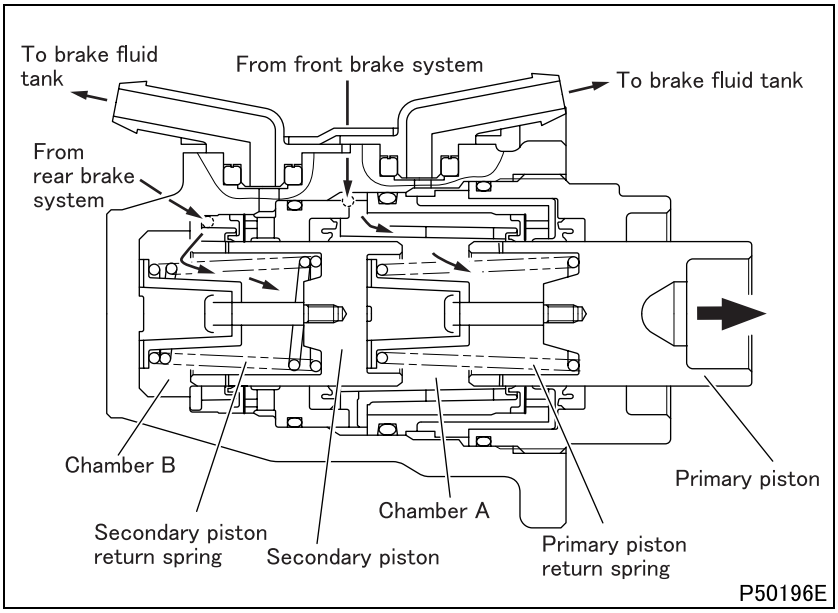

(3) When brake pedal is released

- As the brake pedal is released and the push rod returns to the original position, the primary piston return spring pushes back the primary piston. Chamber A restores the original volume and the pressure in the chamber drops accordingly.
- The secondary piston return spring pushes back the secondary piston. Chamber B restores the original volume and pressure.
- Chambers A and B open up to the brake fluid tank.
- Pressure fluid in the front and rear brake lines flows back into chambers A and B.

5. Flow Priority Valve <FE85>

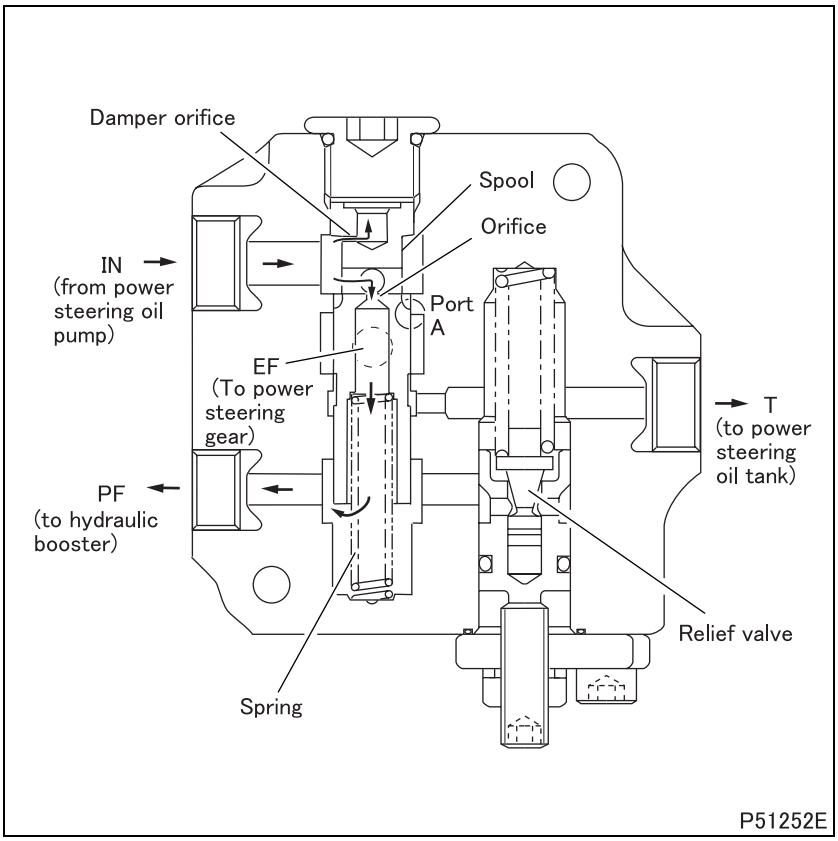

- When brakes are applied hard while the steering wheel is turned, the flow priority valve dampens the associated steering shock by appropriately distributing the flow from the power steering oil pump between the hydraulic booster and the power steering gear.

5.1 When pump output is at or below regulated flow rate

- The power steering oil pump output flows through the orifice and to the hydraulic booster.
- The pressure difference across the orifice acts on the spool which is then pushed down against the spring. However, port A remains blocked by the spool. As a result, the full flow from the pump is directed to PF.

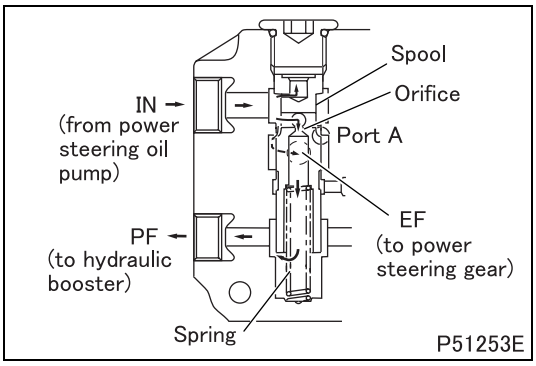

5.2 When pump output exceeds regulated flow rate

- When the pump output exceeds the regulated flow rate, the pressure difference across the orifice becomes greater and acts on the spool such that the spool is pushed down against the spring until port A opens. Excess flow is directed through port A and into EF.
- In this state, if the hydraulic booster is operated and a greater flow is demanded by PF line (PF pressure > EF pressure), the spool moves to reduce the opening of port A so that the required pressure and the regulated flow rate are both achieved.

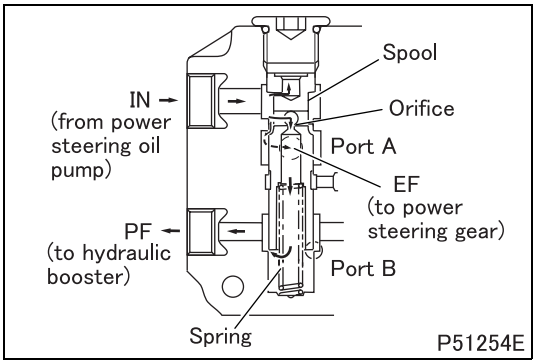

5.3 When power steering gear (EF line) is operated

- When power steering gear (EF line) is operated and a greater flow is demanded by EF line (PF pressure < EF pressure), the pressure difference across the orifice acts on the spool such that the spool is pushed down against the spring until the opening of port B is reduced. As a result, the required pressure and the regulated flow rate are both achieved.

5.4 When hydraulic booster (PF line) and power steering gear (EF line) are both operated

- When the hydraulic booster (PF line) and the power steering gear (EF line) are both operated and greater flows are demanded by these lines, the spool is moved against the spring such that the openings of ports A and B are appropriately balanced to achieve the regulated flow rate.

6. Front Disc Brake <FE>

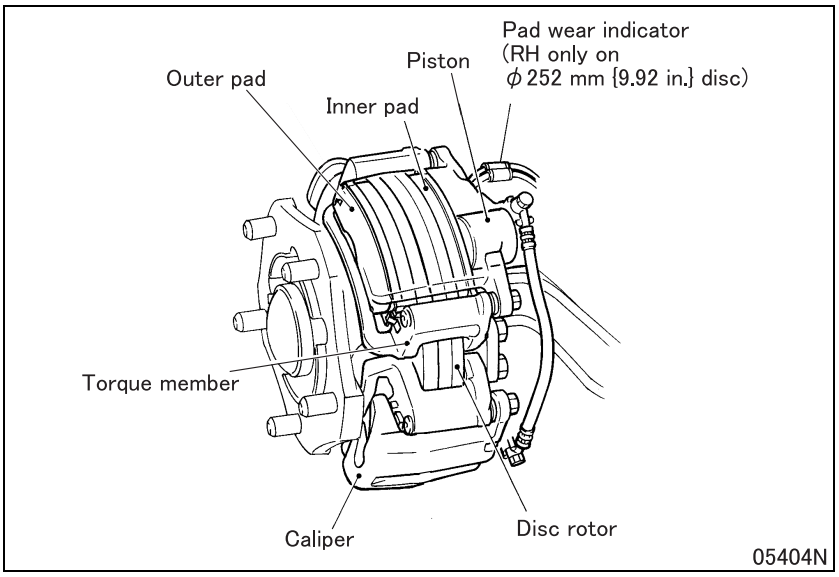

- The front disc brake uses a twin floating-type calipers.
- The caliper houses one each of cylinder and piston. Stopping power is generated by squeezing the disc rotor between the pads, with the outer pad pressed against the disc rotor by reaction.
- The inner pad is equipped with wear indicator which serves to indicate replacement timing for both the inner and outer pads.
- The front disc brake is equipped with a self-adjusting mechanism to compensate for pad wear and maintain the correct clearances between the disc rotor and the inner and outer pads. The adjustment is made each time braking is performed.

6.1 Self-adjusting mechanism

(1) Operation

(1.1) When brake pedal is pressed

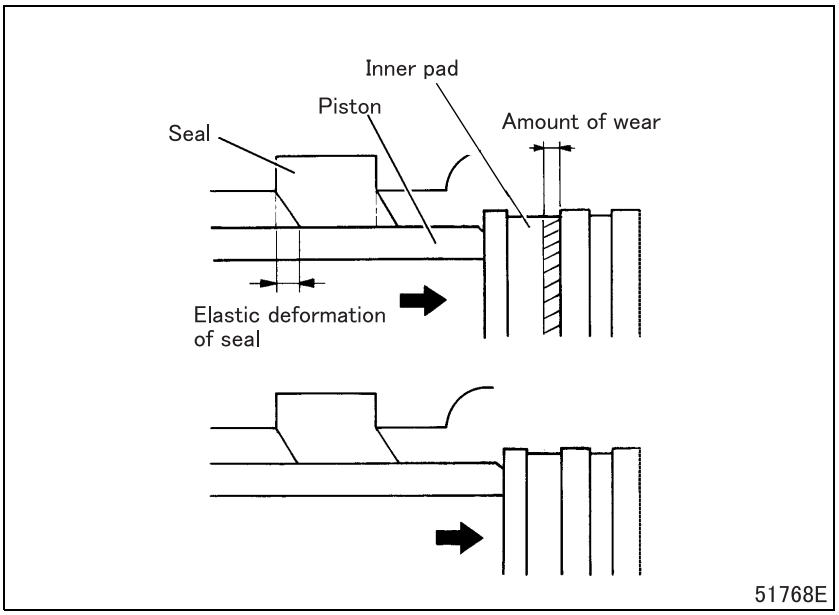

- The piston extends in excess of the seal's elastic deformation by the amount of inner pad wear (shown hatched).

(1.2) When brake pedal is released

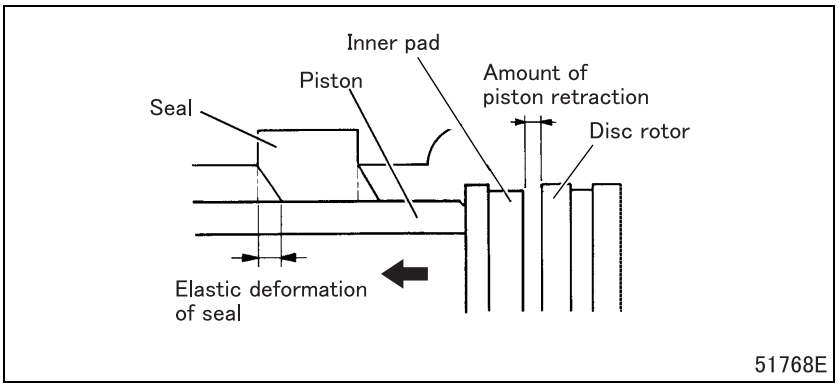

- The piston retracts as much as the amount of the seal's elastic deformation, thus maintaining the correct clearance between the disc rotor and the inner pad.

7. Front Drum Brake <FG>

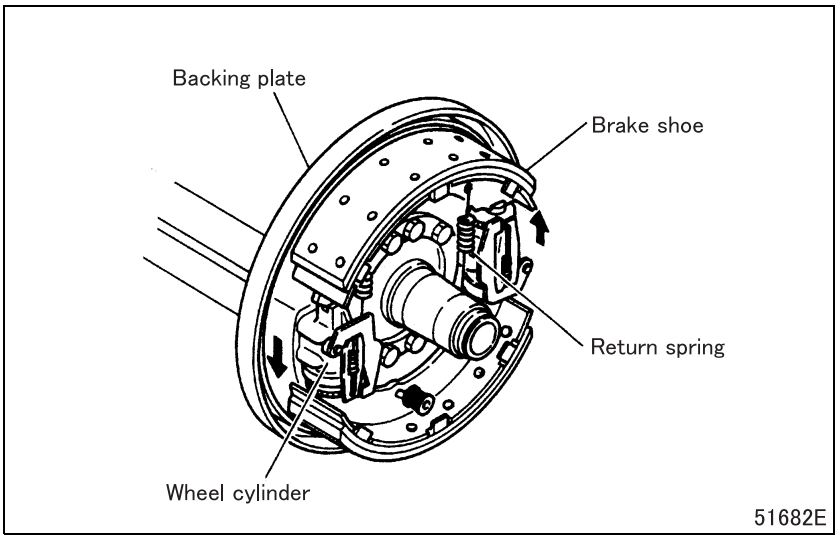

- The front drum brake is of a 2-leading type.
- Single-acting wheel cylinders activate brake shoes, both as a leading shoe, in forward-travel braking. By self-boosting effect, the 2-leading shoe brake generates a great stopping power.

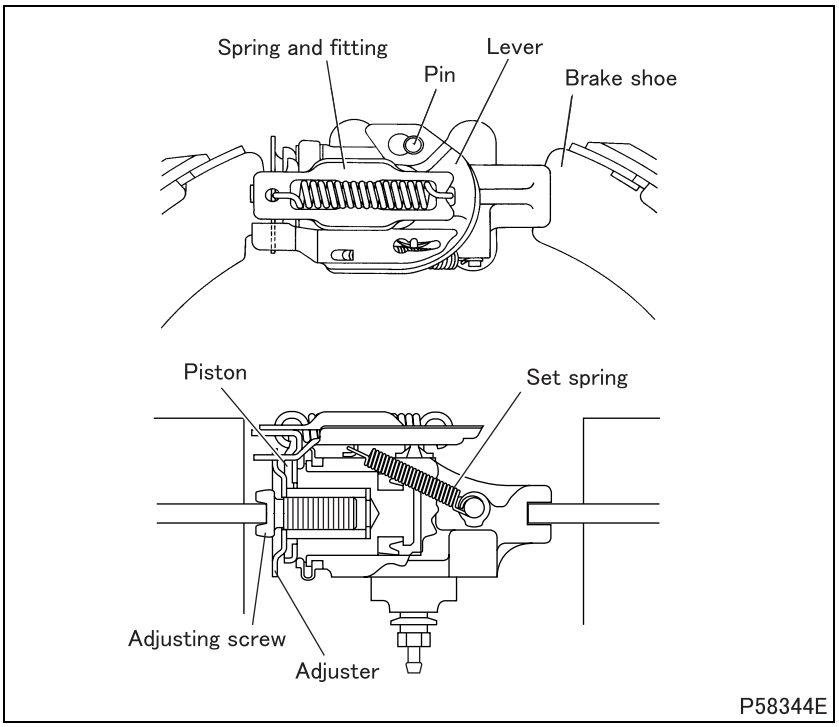

7.1 Wheel cylinder

- The wheel cylinder is equipped with a self-adjusting mechanism to compensate for lining wear and maintain the correct clearance between the lining and the drum. The adjustment is made each time braking is performed.

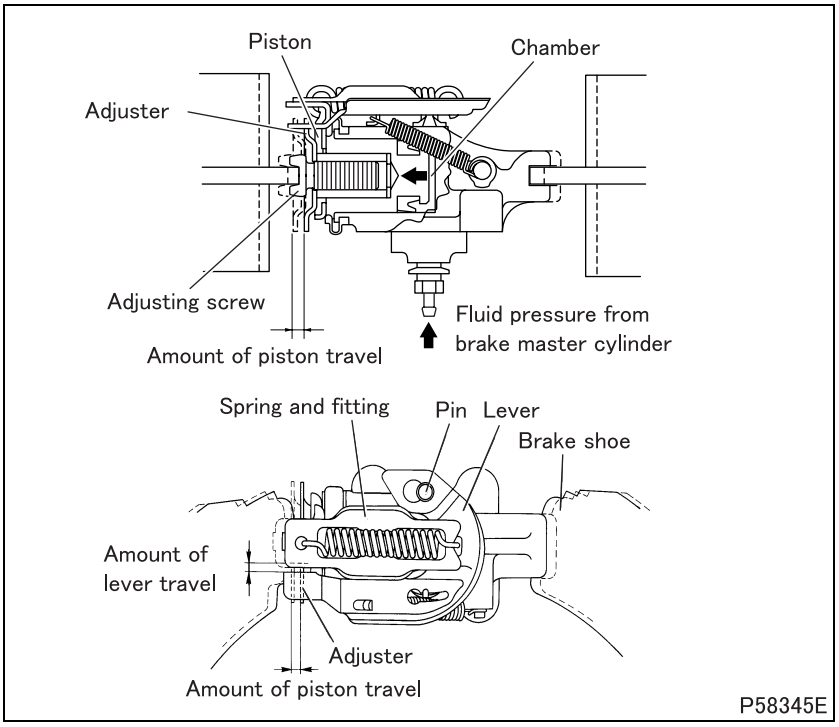

7.2 Self-adjusting mechanism

(1) Operation

- When the brake pedal is pressed, fluid pressure from the brake master cylinder enters into chamber and pushes the piston, which then extends the spring and fitting. The lever, which is connected to the spring and fitting, pivots about the pin.

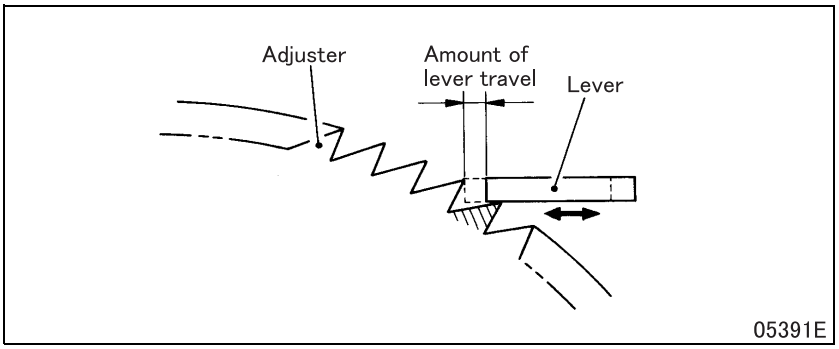

- When the brake drum-to-lining clearance is correct, the amount of lever travel when the brake pedal is pressed is not enough to turn the adjuster which therefore remains in the same place.

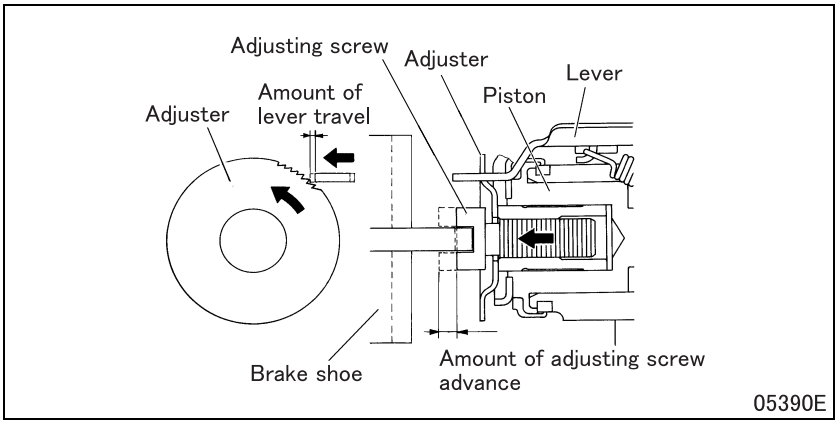

- As the brake drum-to-lining clearance grows, the amount of piston travel, and therefore the amount of lever travel, becomes greater.
- When the lever travels far enough to turn the adjuster, the threads on the adjuster causes the adjusting screw to advance. As a result, the brake shoe extends.

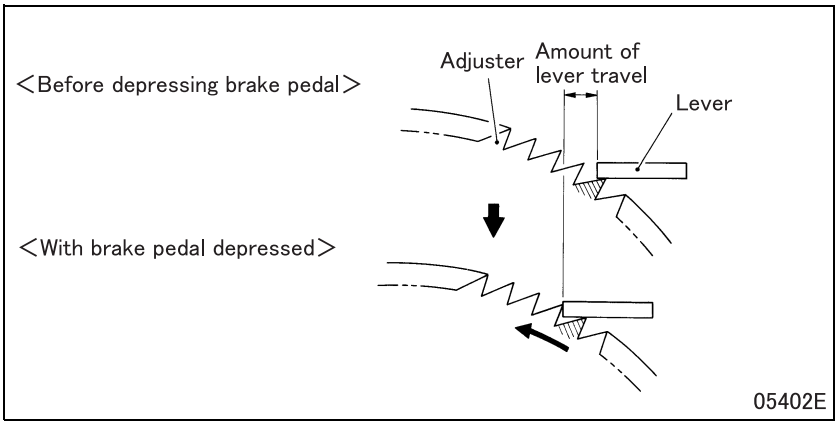

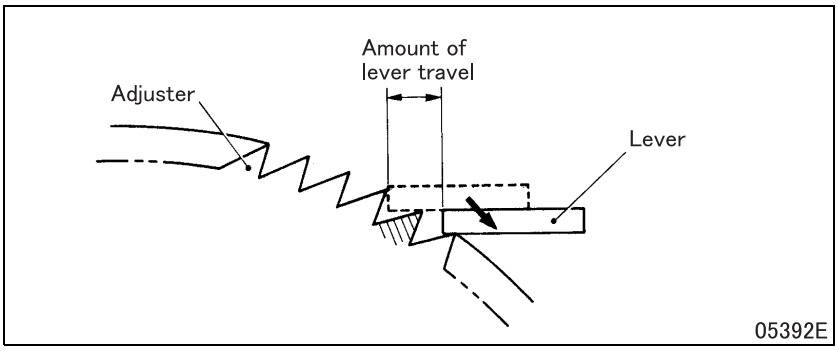

- As the brake pedal is released, the adjuster remains in the new position while the lever retracts by one tooth. The brake drum-to-lining clearance is now correctly adjusted.

8. Rear Disc Brake <FE>

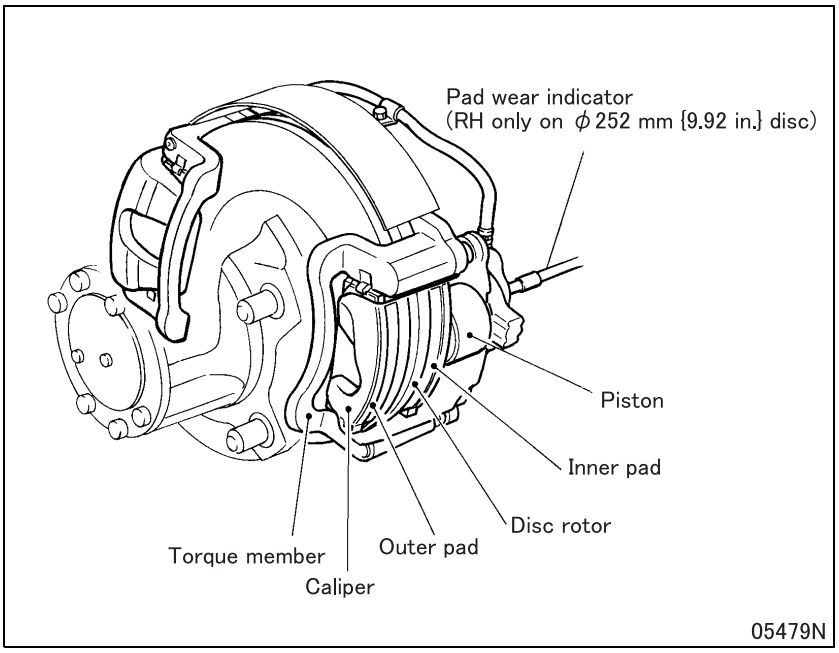

- The rear disc brake uses a twin floating-type calipers.
- The caliper houses one each of cylinder and piston. Stopping power is generated by squeezing the disc rotor between the pads, with the outer pad pressed against the disc rotor by reaction.
- The inner pad is equipped with wear indicator which serves to indicate replacement timing for both the inner and outer pads.
- The rear disc brake is equipped with a self-adjusting mechanism to compensate for pad wear and maintain the correct clearances between the disc rotor and the inner and outer pads. The adjustment is made each time braking is performed.
- The self-adjusting mechanism operates in the same manner as that of the front disc brake.

9. Rear Drum Brake <FG>

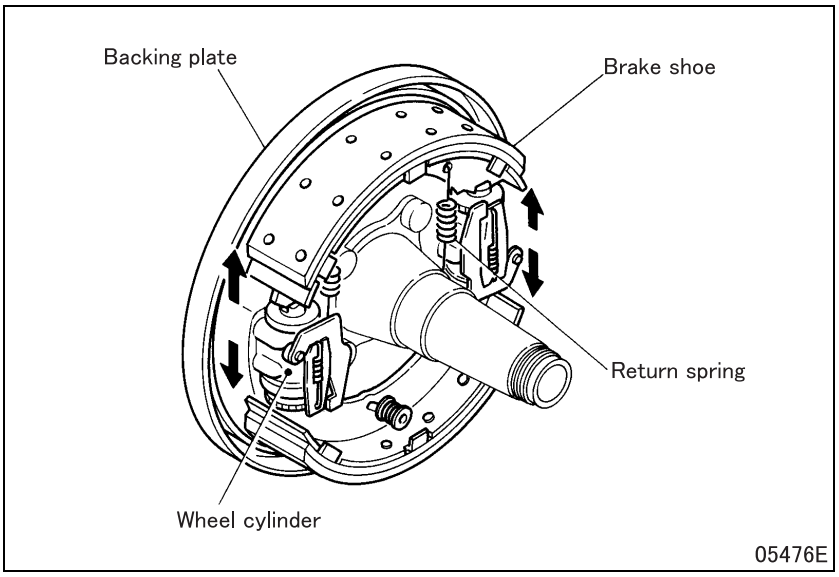

- The rear drum brake is of a dual 2-leading type.
- Double-acting wheel cylinders activate brake shoes, both as a leading shoe, in forward- and rearward-travel braking. By self-boosting effect, the dual 2-leading shoe brake generates a great stopping power.

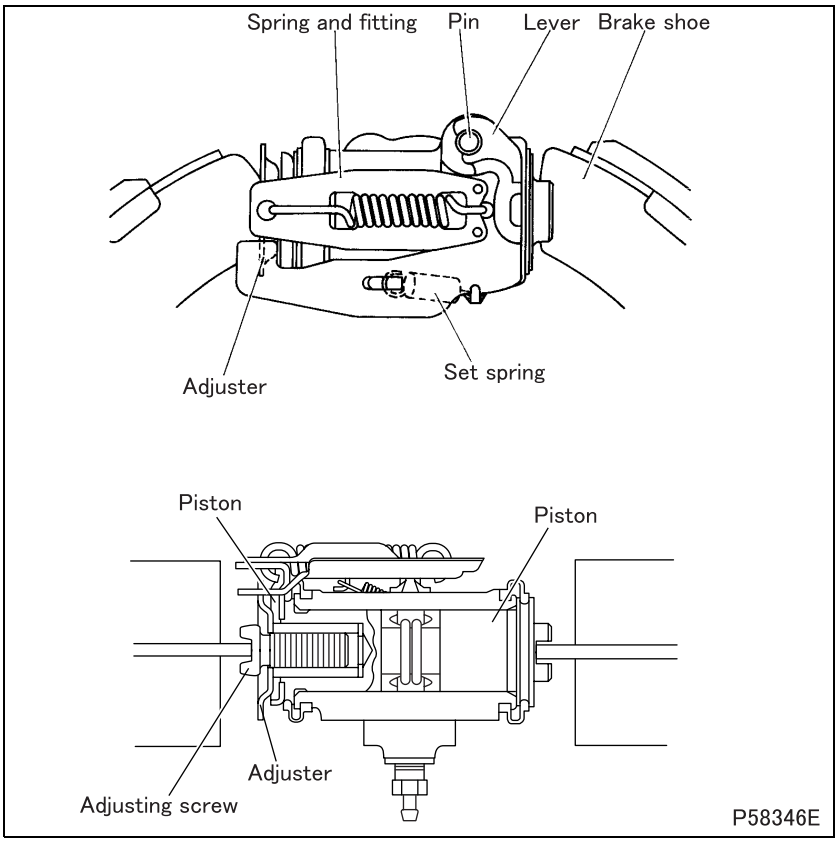

9.1 Wheel cylinder

- The wheel cylinder is equipped with a self-adjusting mechanism to compensate for lining wear and maintain the correct clearance between the lining and the drum. The adjustment is made each time braking is performed.
- The self-adjusting mechanism operates in the same manner as that of the front drum brake.

10. Exhaust Brake System <FE>

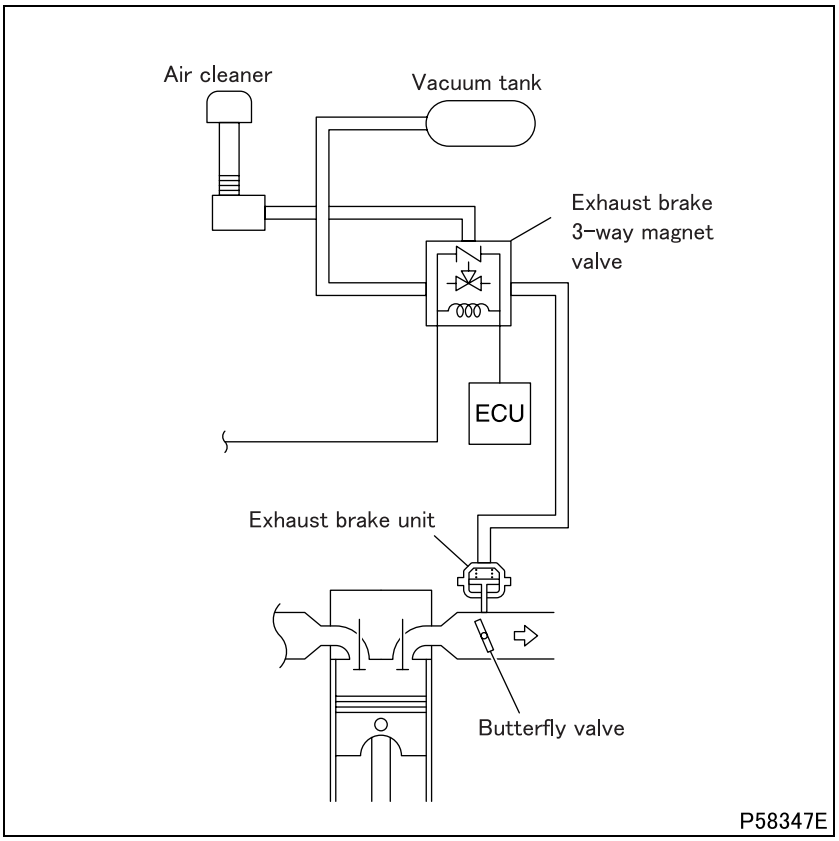

- The exhaust brake system provides stopping power by closing the exhaust piping. Specifically, pressure builds up in the blocked exhaust piping, which then is used to resist the pistons as they move to discharge exhaust in the exhaust stroke.
- The exhaust brake system supplements the foot brake. It is equipped with the exhaust brake unit incorporating a butterfly valve.
- When the exhaust brake switch is turned ON, the excitation winding within the exhaust brake 3-way magnet valve is magnetized. This closes the atmospheric pressure valve while opening the vacuum valve. Vacuum in the vacuum tank acts on the exhaust brake unit, closing the butterfly valve and bringing the exhaust braking in operation.

10.1 Exhaust brake unit (power chamber)

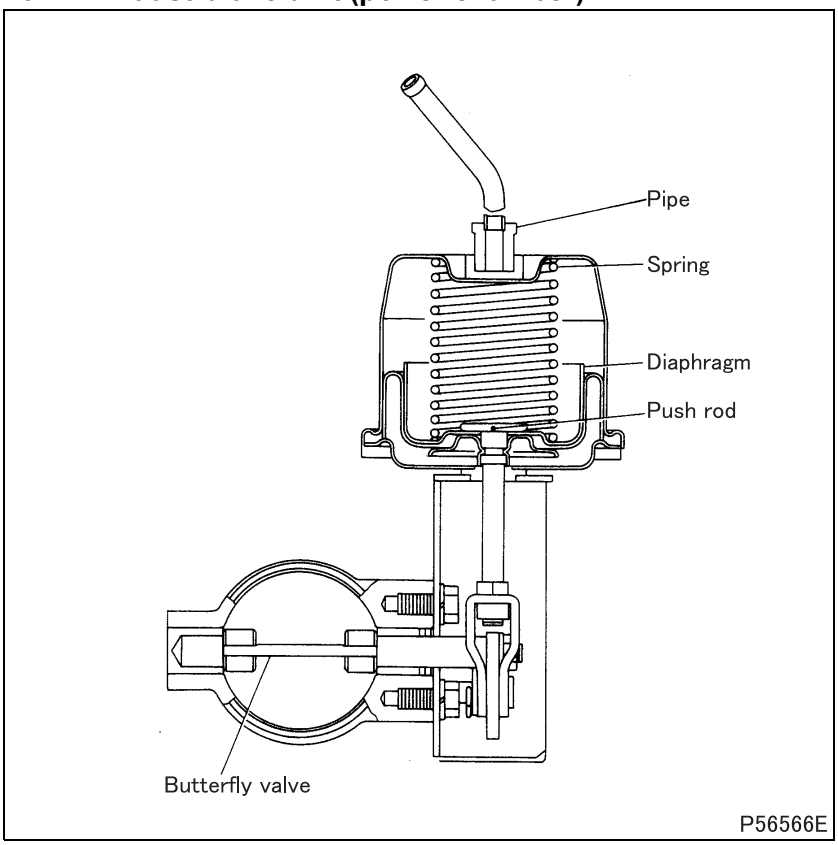

M E M O

Wheel Brake

Possible causes	Symptoms	Brake application one sided							Noise and shock when brake pedal pressed			Reference Gr
		Brake drag (slow disengagement after pedal release)	Stopping power different from right to left	Unstable stopping power	Locking point varies	Other	Insufficient stopping power	Reduced pedal travel	Noise generated when wheels are turned with jacked-up vehicle	Continuous noise during brake application (at low vehicle speed)	Other	
	Backing plate surface rough	O		O								
	Backing plate deformed or incorrectly installed			O								
	Lubricant or moisture on brake pad/lining surface		O		O							
	Deterioration or incorrect material used for brake pad/lining		O									
	Brake pad/lining unevenly worn or with rough surface		O									
	Fade (pad/lining surface deterioration)				O							
	Brake pad/lining worn to limit									O		
	Incorrect contact of brake pad/lining		O		O		O					
	Brake lining worn radius uneven				O							
Wheel brake	Wheel cylinder malfunction	O	O					O	O			
	Shoe return spring fatigued or broken	O							O			
	Disc rotor/brake drum worn unevenly		O									
	Disc rotor/brake drum deformed			O								
	Disc rotor/brake drum worn				O							
	Disc rotor/brake drum surface rough						O					
	Disc rotor/brake drum inaccurately machined										O	
	Brake drum cracked										O	
	Foreign matter in brake drum							O				
	Brake shoe deformed or damaged							O				
	Shoe hold cup broken								O			
	Movable parts insufficiently lubricated										O	

Symptoms / Possible causes		Brake application one sided							Noise and shock when brake pedal pressed			Reference Gr
		Brake drag (slow disengagement after pedal release)	Stopping power different from right to left	Unstable stopping power	Locking point varies	Other	Insufficient stopping power	Reduced pedal travel	Noise generated when wheels are turned with jacked-up vehicle	Continuous noise during brake application (at low vehicle speed)	Other	
Brake pedal	Incorrect pedal travel						O					
	Incorrectly adjusted, too much play							O				
Brake fluid	Fluid level low							O				
	Fluid leakage							O				
	Air ingress							O				
	Vapor lock							O				
Vacuum system	Vacuum drop						O					
Vacuum booster	Faulty						O	O				
Hydraulic booster	Faulty hydraulic booster						O	O				
	Faulty piston cup							O				
Tire	Tire pressure uneven between wheels					O						Gr31
	Different tire sizes from left to right					O						
Axle	Wheel hub bearing incorrectly adjusted					O				O		Gr26, 27
	Wheelbase different from left to right					O						
	Incorrect wheel alignment					O						Gr26

Possible causes	Symptoms	Brake drum overheating		Brake noise						Reference Gr
		Overheating on all wheels	Overheating on specific wheel(s)	Noisy when vehicle is new, or after brake lining/pad replacement	Brakes used under severe conditions	Other	Judder	Abnormal brake pedal return	Brake drag	
Wheel brake	Backing plate surface rough								O	
	Shoe trapped on backing plate surface		O							
	Backing plate deformed or incorrectly installed				O					
	Lubricant or moisture on brake pad/lining surface				O					
	Wear powder attached on brake pad/lining					O				
	Brake pad/lining worn					O				
	Incorrect contact of brake pad/lining			O						
	Wheel cylinder malfunction		O						O	
	Faulty wheel cylinder piston cup		O						O	
	Shoe return spring fatigued or broken		O						O	
	Disc rotor/brake drum glazed				O					Gr26, 27
	Brake drum deformed or center deviation						O			Gr26, 27
	Disc rotor thickness uneven						O			Gr26, 27
	Brake shoe deformed or damaged				O					
	Brake shoe twisted or sagged		O							
Brake pedal	Abnormal pedal return	O								
	Pedal play insufficient								O	
	Linkage rusted or deformed							O		
	Return spring fatigued or broken							O		
	Vacuum/hydraulic booster operating rod thrust							O		
Brake fluid	Brake pipe over-tightened, resulting in poor fluid return		O							
Vacuum booster	Faulty	O								
Hydraulic booster	Faulty hydraulic booster	O								
Brake master cylinder	Faulty piston cup								O	
	Clogged return port	O								
Axle	Wheel hub bearing incorrectly adjusted		O			O	O			Gr26, 27
	King pin bushing worn						O			Gr26A
	Trunnion bearing worn						O			Gr26B

Exhaust Brake

Symptoms / Possible causes		Exhaust brake not effective	Exhaust brake does not disengage	Reference Gr
Vacuum system	Insufficient vacuum	O		
	Collapsed piping	O		
Faulty 3-way magnet valve		O	O	Gr54
Exhaust brake unit	Faulty valve	O	O	
	Stuck valve shaft	O	O	
	Faulty valve chamber	O		
Faulty electric system		O	O	Gr54

ON-VEHICLE INSPECTION AND ADJUSTMENT

1. Replacement of Brake Fluid

- Brake fluid is shared by the brake and clutch systems, and is divided in the brake fluid tank into the two systems. This section describes the replacement of the brake fluid for the brake system. In order to completely replace the brake fluid, the brake fluid in the clutch system should also be replaced.

Tightening torque (Unit: N·m {ft.lbs, kgf·m})

Mark	Parts to be tightened		Tightening torque	Remarks
–	Air bleeder	Disc brake	5.8 to 8.8 {4.3 to 6.5, 0.6 to 0.9}	–
		Drum brake	6.86 to 8.83 {5.1 to 6.5, 0.7 to 0.9}	–

Lubricant and/or sealant

Mark	Points of application	Specified lubricant and/or sealant	Quantity
–	Brake fluid tank	Brake fluid (SAE J1703 or FMVSS No. 116 DOT3)	As required

WARNING ⚠

- **Be sure to use new brake fluid. Do not mix it with brake fluid of different properties or mineral oil (gas oil, engine oil, gear oil, automatic transmission fluid, etc.). This will alter the original properties of FUSO Brake Fluid, causing the boiling point to drop as well as the brake rubber parts to swell. Faulty operation of the brake will result.**
- **Ensure that no foreign matter or water enter into the brake fluid when refilling it, as they will cause faulty brake operation.**
- **Use a mug exclusively kept for the specified brake fluid. This ensures that no brake fluid of different properties or mineral oil enter into the system.**

CAUTION ⚠

- **Brake fluid is corrosive on paintwork. Be careful not to spill it onto the paintwork. If brake fluid is spilled onto the paintwork, immediately wipe it off.**

NOTE

- **During brake fluid replacement operation, a change in color of the brake fluid being discharged indicates that the old brake fluid in the system has been replaced with new brake fluid.**
- **During the replacement, be sure to keep the brake fluid level at the "MAX" mark on the tank.**

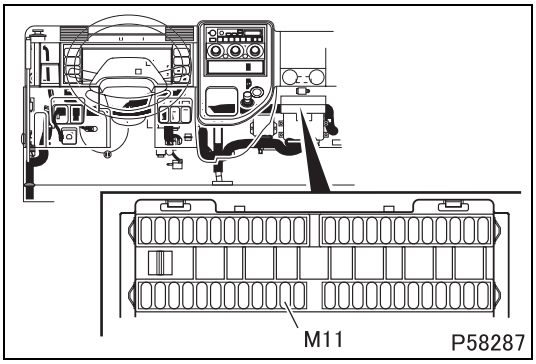

1.1 Work before replacement

- Remove the power fuse (M11) for the electronic control unit of anti-lock brake system.

WARNING ⚠

- **Do not install the power fuse until after the brake fluid replacement is completed. Otherwise, the initial system check starts, possibly causing air to enter into the secondary system (anti-lock brake system operating circuit).**

- On vehicles equipped with a vacuum booster, in order to ensure that the vacuum booster function properly, start the engine and keep it running at idle until the replacement is completed.
- On vehicles equipped with a hydraulic booster, the emergency pump is used for the replacement operation. Therefore, stop the engine and turn the starter switch ON.
- Install one end of a vinyl pipe onto each air bleeder. Place the loose end into a container.

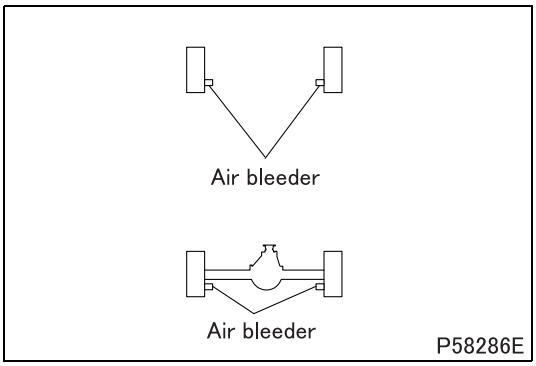

1.2 Replacement of brake fluid

- Loosen each bleeder screw, and press and release the brake pedal repetitively until brake fluid is no longer discharged from the pipes.
- While filling the brake fluid tank with new brake fluid up to the “MAX” mark, cycle the brake pedal repetitively until the old brake fluid being discharged is replaced with new brake fluid. Tighten each air bleeder to the specified torque.
- Proceed to Air Bleeding of Brake System.

2. Air Bleeding of Brake System

- Brake fluid is shared by the brake and clutch systems, and is divided in the brake fluid tank into the two systems. This section describes the air bleeding of the brake system.

Tightening torque (Unit: N·m {ft.lbs, kgf·m})

Mark	Parts to be tightened		Tightening torque	Remarks
–	Air bleeder	Disc brake	5.8 to 8.8 {4.3 to 6.5, 0.6 to 0.9}	–
		Drum brake	6.86 to 8.83 {5.1 to 6.5, 0.7 to 0.9}	–

Lubricant and/or sealant

Mark	Points of application	Specified lubricant and/or sealant	Quantity
–	Brake fluid tank	Brake fluid (SAE J1703 or FMVSS No. 116 DOT3)	As required

WARNING ⚠

- **Be sure to use new brake fluid. Do not mix it with brake fluid of different properties or mineral oil (gas oil, engine oil, gear oil, automatic transmission fluid, etc.). This will alter the original properties of FUSO Brake Fluid, causing the boiling point to drop as well as the brake rubber parts to swell. Faulty operation of the brake will result.**
- **Ensure that no foreign matter or water enter into the brake fluid when refilling it, as they will cause faulty brake operation.**
- **Use a mug exclusively kept for the specified brake fluid. This ensures that no brake fluid of different properties or mineral oil enter into the system.**

CAUTION ⚠

- **Brake fluid is corrosive on paintwork. Be careful not to spill it onto the paintwork. If brake fluid is spilled onto the paintwork, immediately wipe it off.**

NOTE

- **Brake fluid level drops during the air bleeding operation. Be sure to keep the brake fluid level at the "MAX" mark on the tank.**

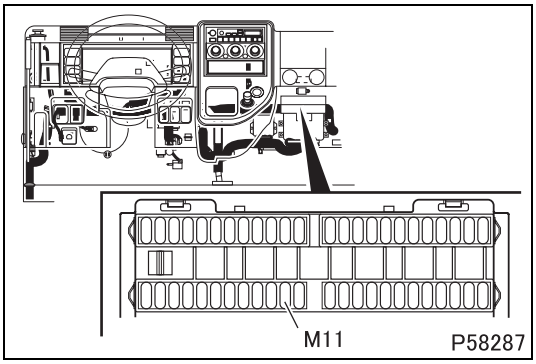

2.1 Work before replacement

- Remove the power fuse (M11) for the electronic control unit of anti-lock brake system.

WARNING ⚠

- **Do not install the power fuse until after the air bleeding of the primary brake system (normal circuit) is completed. Otherwise, the initial system check starts, possibly causing air to enter into the secondary system (anti-lock brake system operating circuit).**

- On vehicles equipped with a vacuum booster, in order to ensure that the vacuum booster function properly, start the engine and keep it running at idle until the replacement is completed.
- On vehicles equipped with a hydraulic booster, the emergency pump is used for the replacement operation. Therefore, stop the engine and turn the starter switch ON.
- Install one end of a vinyl pipe onto each air bleeder. Place the loose end into a container.

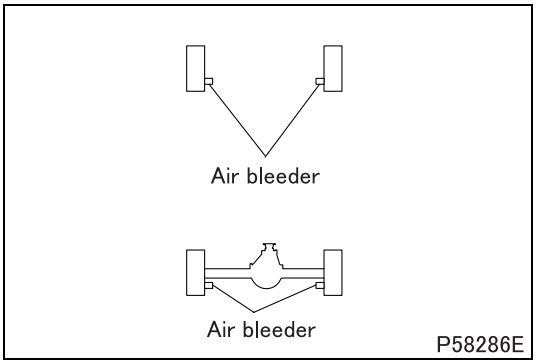

2.2 Air bleeding of brake system

(1) Air bleeding of primary brake system (normal circuit)

- Perform the air bleeding sequence described below on each of the 4 wheels in the order of the following table.

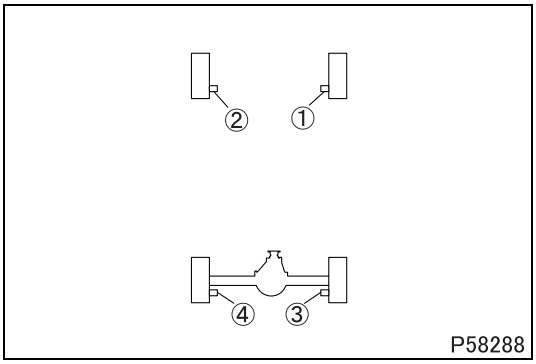

Order of air bleeding	Brake system	Wheel
(1)	Front	Front right
(2)		Front left
(3)	Rear	Rear right
(4)		Rear left

CAUTION ⚠

- **If air has entered into the secondary brake system (anti-lock brake system operating circuit), bleed air from the secondary system after completing the air bleeding of the primary system (normal circuit).**
- **Normally, during air bleeding or hydraulic unit replacement operation, air cannot enter into the secondary system (anti-lock brake system operating circuit) which is filled with brake fluid and is closed off. Therefore, only the primary system (anti-lock brake system operating circuit) needs to be bled of air.**

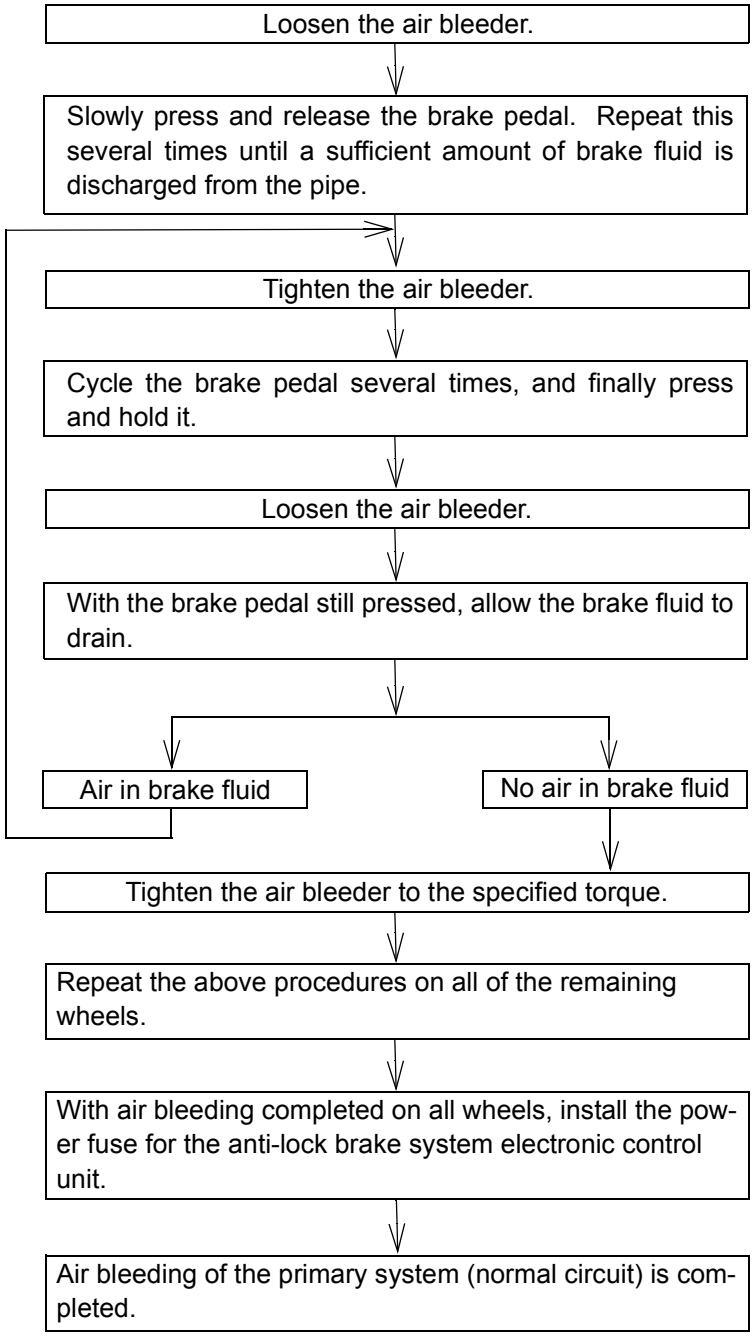

(2) Air bleeding of secondary brake system (anti-lock brake system operating circuit)

- If the anti-lock brake system system is operated with air still remaining in the primary brake system (normal circuit), air can enter into the secondary brake system (anti-lock brake system operating circuit).
- If air has entered into the secondary system (anti-lock brake system operating circuit), that air can also flow into the primary system (normal circuit) when the anti-lock brake system system is operated, possibly causing the brake pedal stroke to extend.
- Multi-Use Tester-II or Multi-Use Tester-III actuator test (anti-lock brake system operating mode) is performed as part of the air bleeding procedures.

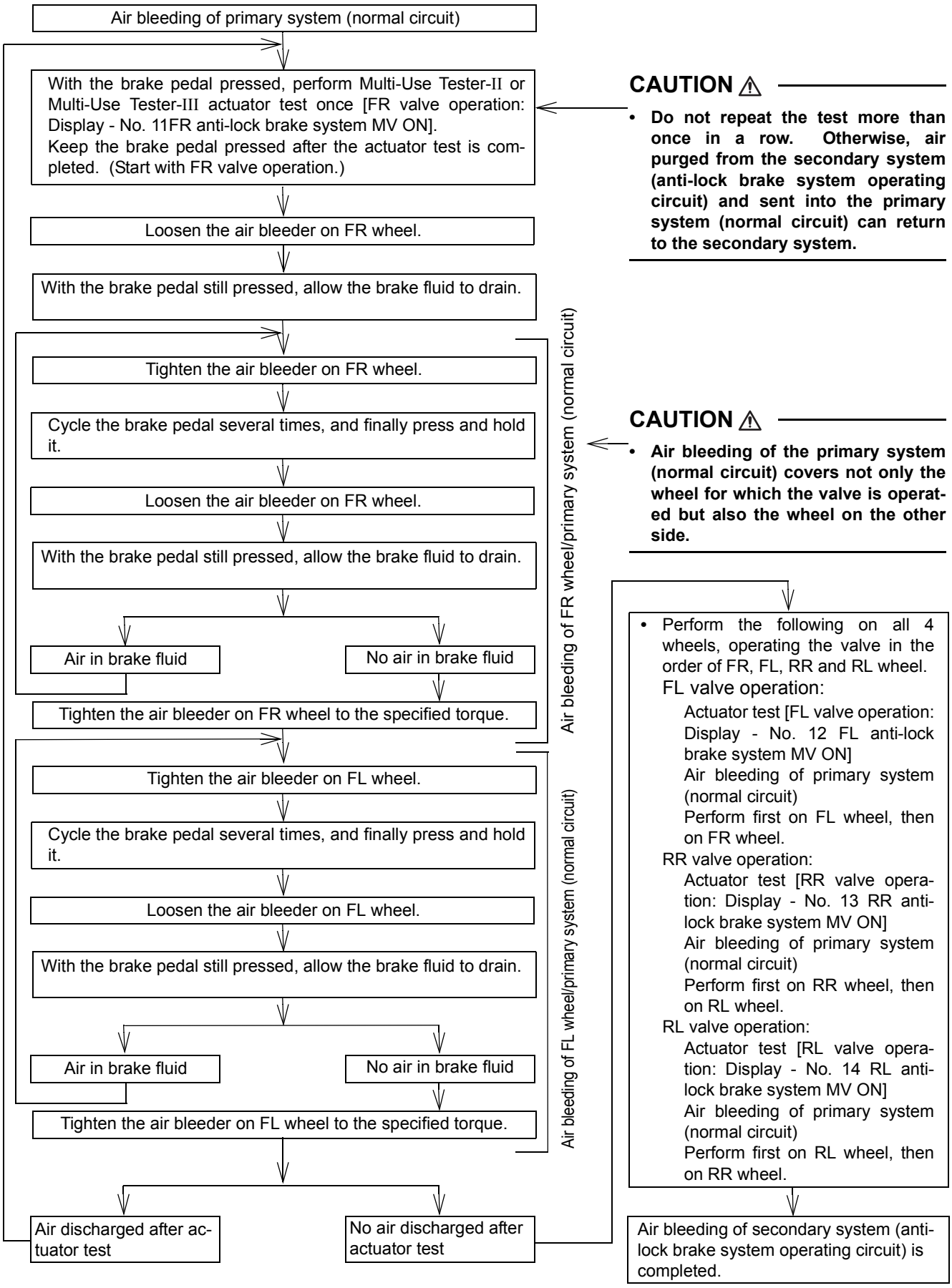
Air bleeding of primary system (normal circuit)
With the brake pedal pressed, perform Multi-Use Tester-II or Multi-Use Tester-III actuator test once [FR valve operation: Display - No. 11FR anti-lock brake system MV ON].
Keep the brake pedal pressed after the actuator test is completed. (Start with FR valve operation.)
Loosen the air bleeder on FR wheel.
With the brake pedal still pressed, allow the brake fluid to drain.
Tighten the air bleeder on FR wheel.
Cycle the brake pedal several times, and finally press and hold it.
Loosen the air bleeder on FR wheel.
With the brake pedal still pressed, allow the brake fluid to drain.
Air in brake fluid
No air in brake fluid
Tighten the air bleeder on FR wheel to the specified torque.
Air bleeding of FR wheel/primary system (normal circuit)
Tighten the air bleeder on FL wheel.
Cycle the brake pedal several times, and finally press and hold it.
Loosen the air bleeder on FL wheel.
With the brake pedal still pressed, allow the brake fluid to drain.
Air in brake fluid
No air in brake fluid
Tighten the air bleeder on FL wheel to the specified torque.
Air bleeding of FL wheel/primary system (normal circuit)
Air discharged after actuator test
No air discharged after actuator test
CAUTION
• Do not repeat the test more than once in a row. Otherwise, air purged from the secondary system (anti-lock brake system operating circuit) and sent into the primary system (normal circuit) can return to the secondary system.
CAUTION
• Air bleeding of the primary system (normal circuit) covers not only the wheel for which the valve is operated but also the wheel on the other side.
• Perform the following on all 4 wheels, operating the valve in the order of FR, FL, RR and RL wheel.
FL valve operation:
Actuator test [FL valve operation: Display - No. 12 FL anti-lock brake system MV ON]
Air bleeding of primary system (normal circuit)
Perform first on FL wheel, then on FR wheel.
RR valve operation:
Actuator test [RR valve operation: Display - No. 13 RR anti-lock brake system MV ON]
Air bleeding of primary system (normal circuit)
Perform first on RR wheel, then on RL wheel.
RL valve operation:
Actuator test [RL valve operation: Display - No. 14 RL anti-lock brake system MV ON]
Air bleeding of primary system (normal circuit)
Perform first on RL wheel, then on RR wheel.
Air bleeding of secondary system (anti-lock brake system operating circuit) is completed.

3. Inspection and Adjustment of Brake Pedal Free Play

Service standards (Unit: mm {in.})

Location	Maintenance item	Standard value	Limit	Remedy
–	Pedal free play	0.1 to 3 {0.0034 to 0.12}	–	Adjust

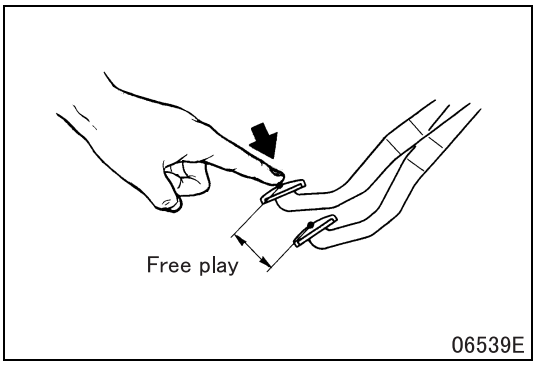

[Inspection]

- With the engine stationary, ensure that the pedal play conforms to the standard value.
- If the measured value does not conform to the standard value, adjust the installed height of the brake pedal.

[Adjustment]

- For adjustment procedures, see “5. Inspection of Brake Pedal Full Stroke and Adjustment of Installed Height of Brake Pedal.”

4. Inspection and Adjustment of Brake Pedal Pressed Height from Floor

Service standards (Unit: mm {in.})

Location	Maintenance item	Standard value	Limit	Remedy
–	Brake pedal height from floor (when pressed with a force of 490 N {110 lbs, 50 kgf}	20 {0.79} or above	–	Adjust

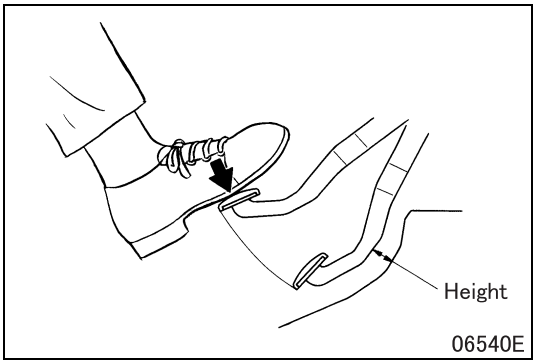

[Inspection]

- With the engine running at idle, press the brake pedal with a force of 490 N {110 lbs, 50 kgf} and measure the brake pedal height from the floor.
- If the measured value does not conform to the standard value, adjust the installed height of the brake pedal.

[Adjustment]

- For adjustment procedures, see “5. Inspection of Brake Pedal Full Stroke and Adjustment of Installed Height of Brake Pedal.”

5. Inspection of Brake Pedal Full Stroke and Adjustment of Installed Height of Brake Pedal

Service standards (Unit: mm {in.})

Location	Maintenance item		Standard value	Limit	Remedy
–	Pedal full stroke (distance between bottom of pedal and floor with brake pedal released)	Except FE85	170 to 177 {6.68 to 6.97}	–	Adjust
		FE85	173 to 181 {6.82 to 7.11}	–	
	Installed height of brake pedal (pedal pad center to brake master cylinder center)	Except FE85	233 ± 3 {9.17 ± 0.12}	–	Adjust
		FE85	230.2 ± 3 {9.06 ± 0.12}	–	

Tightening torque (Unit: N·m {ft.lbs, kgf·m})

Mark	Parts to be tightened		Tightening torque	Remarks
–	Lock nut	Except FE85	21.6 ± 2.94 {16 ± 2.2, 2.2 ± 0.3}	–
		FE85	9.8 to 15.7 {7.2 to 12, 1.0 to 1.6}	–

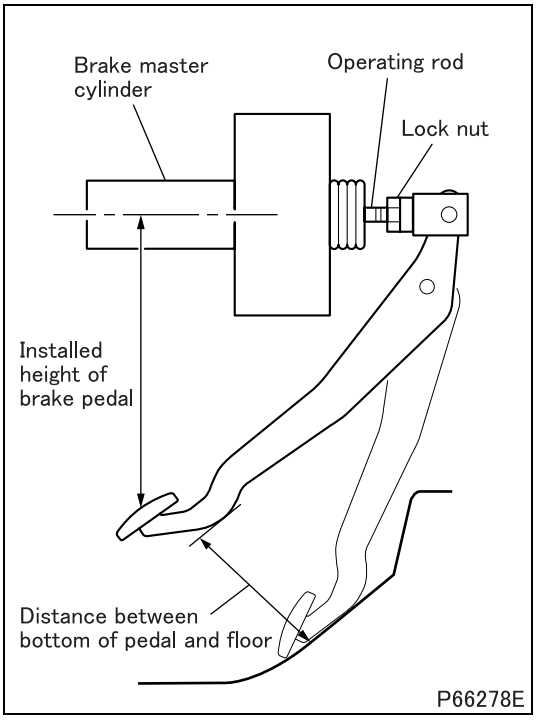

5.1 Inspection of pedal stroke

- With the brake pedal released, measure the distance between the bottom of pedal and the floor. If the measurement conforms to the standard value, the pedal full stroke is correctly adjusted.
- If the above measurement does not conform to the standard value, adjust the installed height of the brake pedal.

5.2 Adjustment of installed height of brake pedal

- After loosening the lock nut, turn the operating rod of the vacuum booster/hydraulic booster until the distance from the pedal pad center to the axis of brake master cylinder conforms to the standard value.
- Tighten the lock nut to the specified torque.
- With the lock nut correctly tightened, adjust the stop lamp switch and inspect the brake pedal play.

CAUTION ⚠

- **When the pedal is fully pressed, the vacuum booster/hydraulic booster operating rod functions as a stopper for the brake pedal.**
- **To prevent brakes from dragging, ensure that the threaded end of the stop lamp switch does not touch the brake pedal stopper.**

6. Inspection and Replacement of Disc Brake Pad <FE>

Service standards (Unit: mm {in.})

Location	Maintenance item	Standard value	Limit	Remedy
–	Thickness of outer/inner pad	14 {0.55}	4 {0.16}	Replace

Tightening torque (Unit: N·m {ft.lbs, kgf·m})

Mark	Parts to be tightened	Tightening torque	Remarks
–	Pin bolt	40 to 50 {30 to 37, 4.0 to 5.0}	–

Special tools (Unit: mm {in.})

Mark	Tool name and shape	Part No.	Application
ⓐ	Piston expander A: 50 {1.97}, B: 5 {0.20} 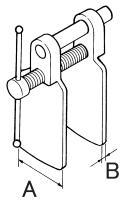 06815	MB990520	Pressing piston during brake pad replacement

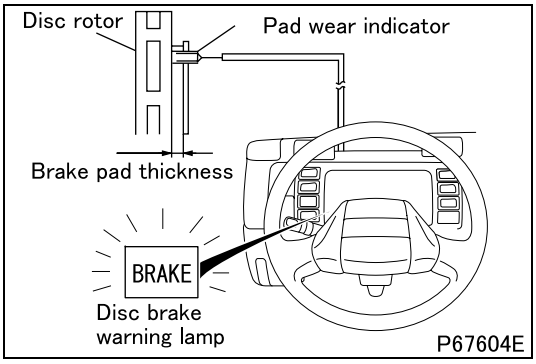

P67604E

[Inspection]

- When a brake pad has worn down to a thickness of approximately 4 mm {0.16 in.}, the pad wear indicator contacts the disc rotor. This breaks the circuit, illuminating the disc brake warning lamp on the meter cluster to tell the operator that the brake pads need replacement.

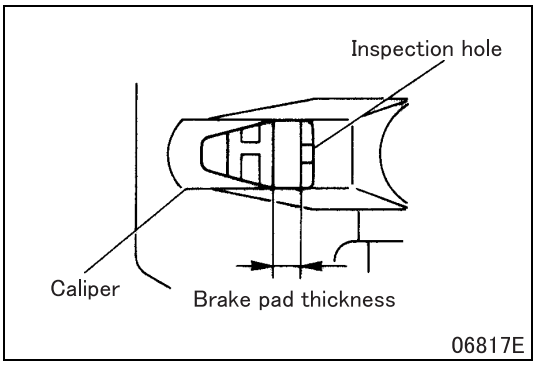

06817E

- Through the inspection hole in the caliper, measure the brake pad thickness. If the measured value is less than the limit, replace all of the brake pads on that axle with a new kit.

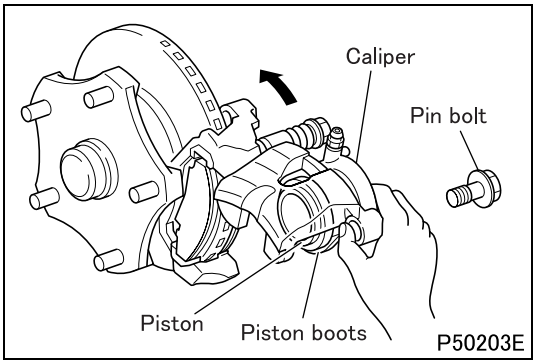

[Replacement]

- Remove the lower pin bolt. Flip the caliper upwards and suspend it in place using a wire or the like.

CAUTION ⚠

- **The caliper needs to be suspended firmly in place so that it does not drop, without stretching, squeezing or otherwise forcing the brake hosing or harness.**

- Inspect the piston for fluid leakage. Inspect the piston boots for damage. Faulty parts must be replaced.
- Remove the following parts. Installation follows the removal procedure in reverse. When installing shims onto the pads, be sure to face them in the illustrated directions.

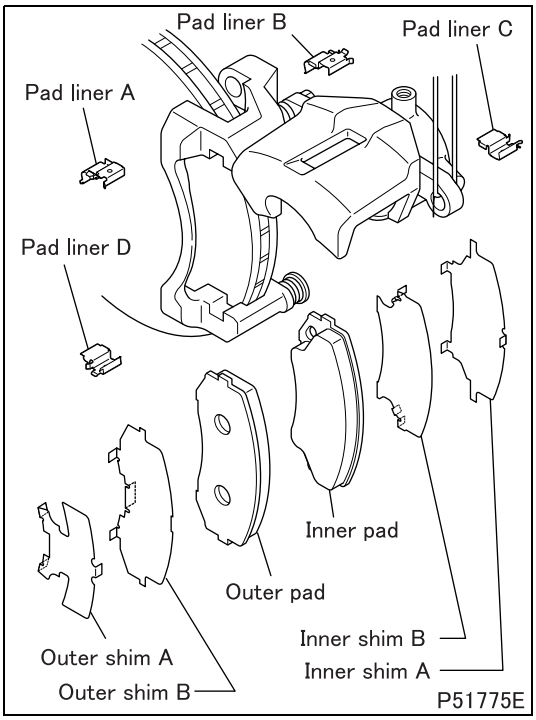

<ϕ235 mm {9.25 in.} disc>

- The inner pad on RH wheel and the inner pad on LH wheel are both equipped with a pad wear indicator.

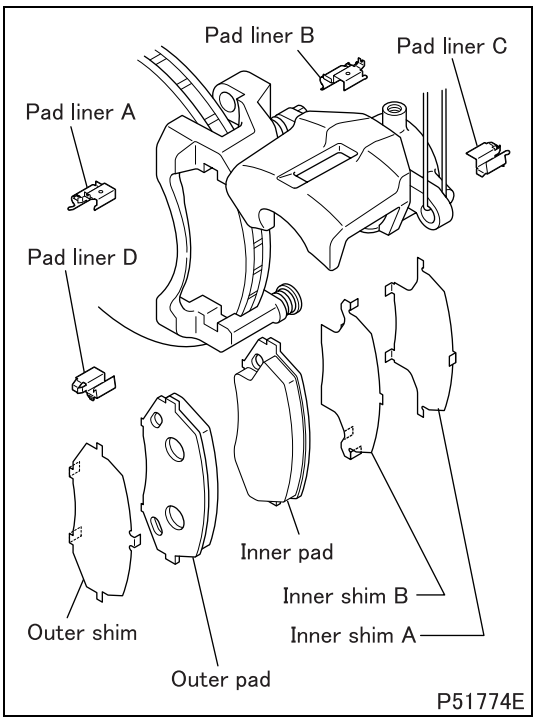

<φ252 mm {9.92 in.} disc>

- The inner pad on RH wheel and the inner pad on LH wheel are both equipped with a pad wear indicator.

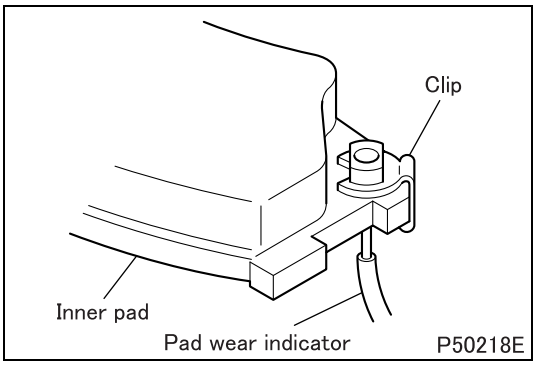

- Install a pad wear indicator onto the inner pad (included in the pad kit) using a clip (included in the pad wear indicator kit).

Pad wear indicator to be installed on	Inner pads on RH and LH wheels

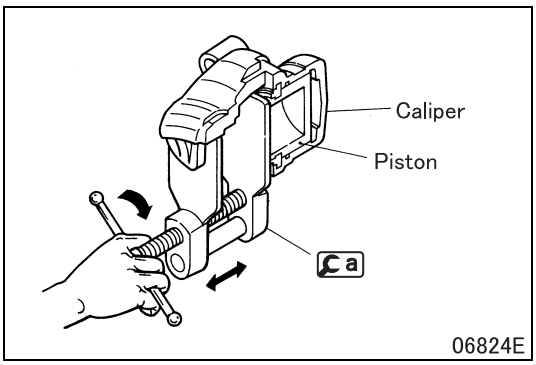

- Using a, screw in the piston of the caliper until it bottoms on the back of the caliper.

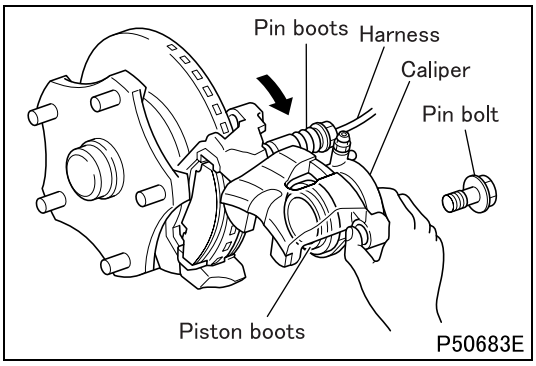

- Move the caliper back to the original place while taking care not to damage the piston boots.
- Bleed the pin boots of air.
- Ensure that the pin boots are firmly attached into the groove on the slide pin.
- Tighten the pin bolt to the specified torque.
- Correctly route the harness(es) for the pad wear indicator(s).
- Measure the drag torque of the disc brake.
- Cycle the brake pedal several times, and check the brake fluid level in the tank. The fluid level should be at the “MAX” mark on the tank. Add brake fluid as required.

7. Measurement of Disc Brake Drag Torque <FE>

Service standards

Location	Maintenance item		Standard value	Limit	Remedy
–	Drag torque of disc brake (tangential force at hub bolts)	Approx. 5 sec. after releasing brake pedal	9.8 N·m {7.2 ft.lbs, 1.0 kgf·m} or less	–	Inspect
		After turning disc rotor 10 revolutions	6.9 N·m {5.1 ft.lbs, 0.7 kgf·m} or less	–	

Table of tangential forces

		Approx. 5 sec. after releasing brake pedal	After turning disc rotor 10 revolutions
FE	Front	81 N {8.3 kgf}	57 N {5.8 kgf}
	Rear	83 N {8.5 kgf}	59 N {6 kgf}
FG	Front	85 N {8.7 kgf}	60 N {6.1 kgf}
	Rear	83 N {8.5 kgf}	59 N {6 kgf}

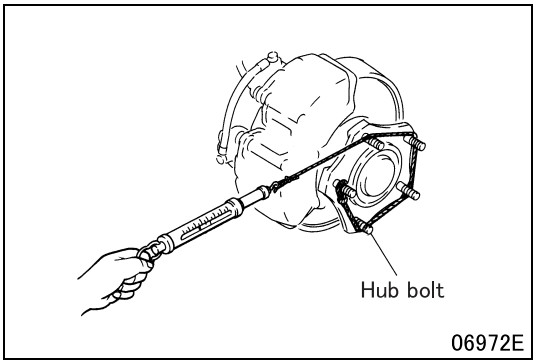

- Ensure that the starting torque of the wheel hub bearings conforms to the standard value.
- Using a spring balance, measure the tangential force at the hub bolts.
- The tangential force is calculated by the following formula.
  Tangential force = Dragging torque / (hub bolt P.C.D. / 2)
- If the measured tangential force conforms to the specified value, this means that the drag torque of the disc brake conforms to the standard value.
- If the measured value does not conform to the specified torque, check the sliding portions of the piston and piston seal.

8. Inspection of Drum Brake Lining Thickness <FG>

CAUTION ⚠

- **To ensure correct operation of the brakes, be sure to inspect both linings on each wheel.**

Service standards (Unit: mm {in.})

Location	Maintenance item	Standard value	Limit	Remedy
–	Brake lining thickness	–	4.0 {0.16}	Replace

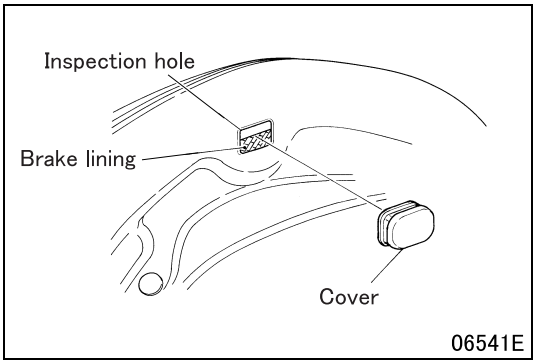

- Remove the cover from the backing plate. Through the inspection hole, check the thickness of the brake lining.
- If the measured value is equal to or less than the limit, replace all of the brake linings or shoes on the same axle.
- After the inspection, be sure to install the cover.

9. Initial Setting of Clearance between Brake Drum and Shoe <FG>

CAUTION ⚠

- **To ensure correct operation of the brakes, be sure to inspect both shoes on each wheel.**

Service standards (Unit: mm {in.})

Location	Maintenance item	Standard value	Limit	Remedy
–	Clearance between brake drum and shoe	0.2 {0.0079}	–	Inspect, and adjust as required

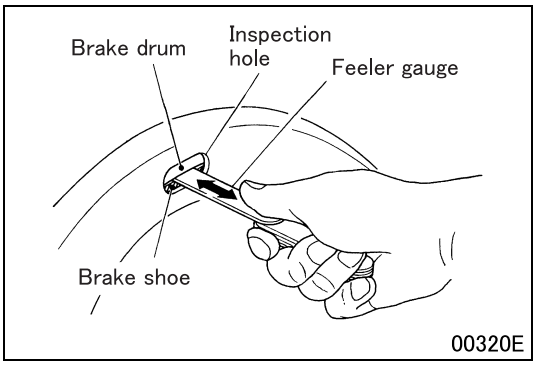

[Inspection]

- Cycle the brake pedal a couple of times to bring the brake shoes to conditions appropriate for the inspection.
- Through the inspection hole, insert a feeler gauge between the brake drum and lining. The gauge should be able to be inserted and out with slight resistance.
- If the clearance does not conform to the standard value, perform the following adjustment.

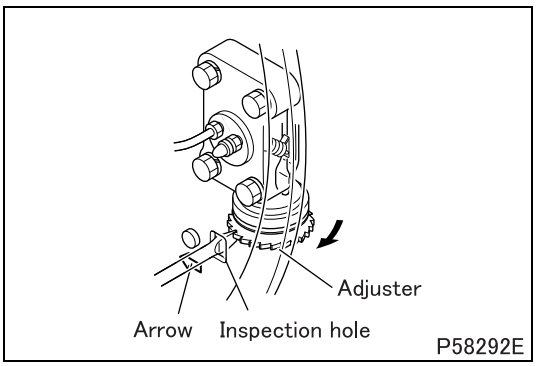

[Adjustment]

- Jack up the wheel being adjusted. Ensure that the wheel hub bearings are not loose.
- With a 0.3 mm {0.012 in.} feeler gauge inserted through the inspection hole, adjust the drum-to-lining clearance in the following manners such that the gauge can be inserted and out with slight resistance.
- If the feeler gauge can be inserted and out with no resistance, turn the adjuster through the inspection hole in the direction of the arrow on the backing plate.

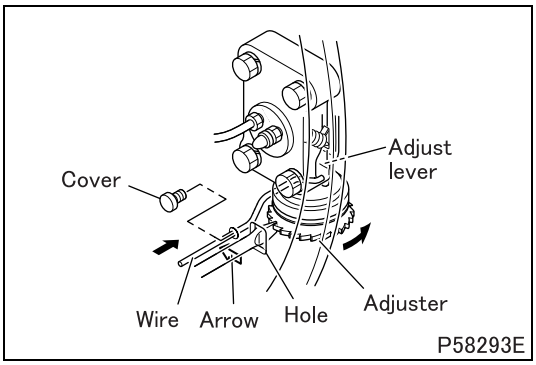

- If the clearance is too small to insert the feeler gauge or there is considerable resistance when inserting the gauge, remove the cover and insert a ϕ2 mm {0.079 in.} wire through the hole to lift the adjust lever for the wheel cylinder. Then, through the inspection hole turn the adjuster in the direction opposite to the arrow on the backing plate to increase the clearance between the brake drum and shoe.
- Then, cycle the brake pedal a couple of times. This will automatically bring the brake drum-to-shoe clearance to 0.2 mm {0.0079 in.}.
- Insert a 0.2 mm {0.0079 in.} feeler gauge between the brake drum and lining. It should be able to be inserted and out with slight resistance.
- Check the disc brake for normal operation. If faulty, disassemble and inspect the wheel cylinders.

10. Inspection of Check Valve in Vacuum Line Hose

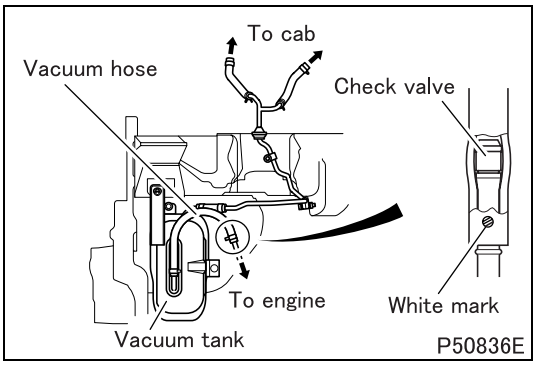

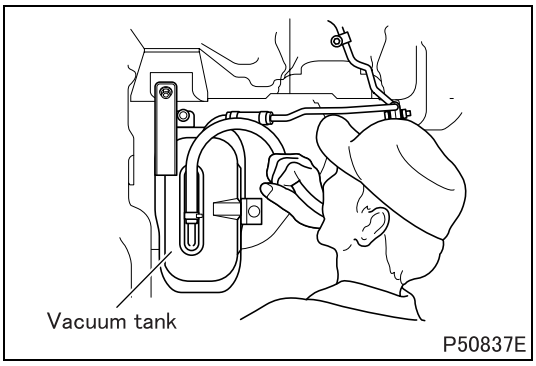

CAUTION ⚠

- **Be careful not to allow moisture into the check valve.**
- **During the inspection, ensure that the check valve opens as well as closes correctly.**
- **Do not attempt to remove the check valve from the vacuum hose.**

- Perform the following inspections. If the check valve does not pass both inspections, replace the check valve complete with the vacuum hose.
  - Blow into the hose. The check valve should close, preventing the breath from passing it.
  - Suck on the hose. The check valve should open, allowing air to pass.

11. Inspection of Vacuum Pump

Service standards

Location	Maintenance item		Standard value	Limit	Remedy
–	Time to reach vacuum of 80 kPa {23.6 in.Hg, 600 mmHg}	At 1500 rpm	Within 20 sec.	–	Replace
		At 3000 rpm	Within 12 sec.	–	

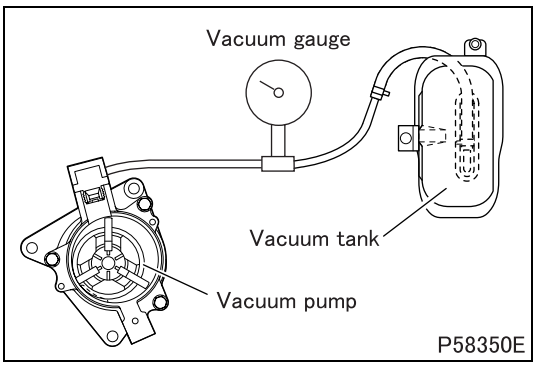

- Install a vacuum gauge between the vacuum tank and the vacuum pump.
- Start the engine and measure the time taken to reach the specified degree of vacuum.
- If the measured time does not conform to the standard value, disassemble and service the vacuum pump.

12. Inspection of Vacuum Booster <Except FE85>

- The vacuum booster can be inspected in 2 ways: one without using any tester and the other using a simplified tester. In either way, ensure that the brake piping and hosing and their connections are free of leakage, damage, or other faults.

Service standards

Location	Maintenance item		Standard value	Limit	Remedy
–	Precision inspection (vacuum loss) (vacuum of 67 kPa {19.8 in.Hg, 500 mmHg}, 15 sec. after engine stop)		3.3 kPa {0.97 in.Hg, 25 mmHg} or less	–	Replace
–	Fluid pressure at vacuum of 67 kPa {19.8 in.Hg, 500 mmHg}	ϕ8 + ϕ9 inch vacuum booster, ϕ30.16 mm {1.19 in.} brake master cylinder	4830 kPa {700 psi, 49.3 kgf/cm^2} (pedal pressed with a force of 98 N {22.0 lbs, 10 kgf})	–	Replace
			8230 kPa {1190 psi, 83.9 kgf/cm^2} (pedal pressed with a force of 295 N {66.3 lbs, 30 kgf})	–	
		ϕ9 + ϕ10 inch vacuum booster, ϕ31.75 mm {1.25 in.} brake master cylinder	4360 kPa {630 psi, 44.5 kgf/cm^2} (pedal pressed with a force of 98 N {22.0 lbs, 10 kgf})	–	
			8800 kPa {1280 psi, 89.7 kgf/cm^2} (pedal pressed with a force of 295 N {66.3 lbs, 30 kgf})	–	
–	Fluid pressure at vacuum of 0 kPa {0 in.Hg, 0 mmHg}	ϕ8 + ϕ9 inch vacuum booster, ϕ30.16 mm {1.19 in.} brake master cylinder	345 kPa {50 psi, 3.5 kgf/cm^2} (pedal pressed with a force of 98 N {22.0 lbs, 10 kgf})	–	Replace
			1720 kPa {250 psi, 17.5 kgf/cm^2} (pedal pressed with a force of 295 N {66.3 lbs, 30 kgf})	–	
		ϕ9 + ϕ10 inch vacuum booster, ϕ31.75 mm {1.25 in.} brake master cylinder	315 kPa {46 psi, 3.2 kgf/cm^2} (pedal pressed with a force of 98 N {22.0 lbs, 10 kgf})	–	
			1550 kPa {225 psi, 15.8 kgf/cm^2} (pedal pressed with a force of 295 N {66.3 lbs, 30 kgf})	–	

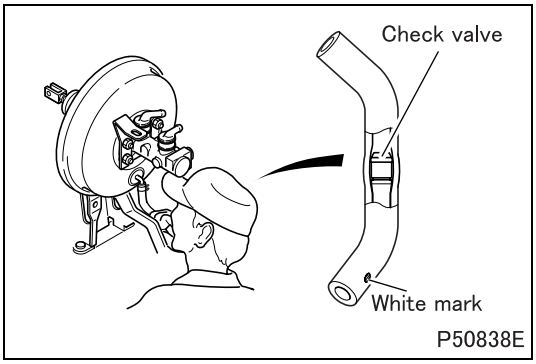

12.1 Inspection of check valve in vacuum hose

CAUTION ⚠

- **Be careful not to allow moisture into the check valve.**
- **During the inspection, ensure that the check valve opens as well as closes correctly.**
- **Do not attempt to remove the check valve from the vacuum hose.**

- Start the engine and charge the vacuum tank with vacuum.
- Stop the engine, and immediately remove the clamp fixing the vacuum hose onto the vacuum pipe, and hold the hose in the mouth.
- Blow into the hose. The check valve should close, preventing the breath from passing it.
- Suck on the hose while pressing the brake pedal. The check valve should immediately open, allowing air to pass.
- If any fault is encountered during the above inspections, replace the check valve complete with the vacuum hose.

12.2 Operational check of vacuum booster

CAUTION ⚠

- **The vacuum booster operational checks described below are only of summary nature. If the vacuum booster continues to malfunction, perform a bench test specified by a service station of the manufacturer on the vacuum booster after removing it from the vehicle.**
- **If the vacuum booster is found to be faulty during the specified testing, ask the service station of the manufacturer for repair.**

(1) Operational check without any tester

- Inspect the check valve in the vacuum hose for normal operation.
- Perform the checks described below. If any fault is found during these checks, inspect the following parts.
  - Vacuum booster
  - Vacuum pump

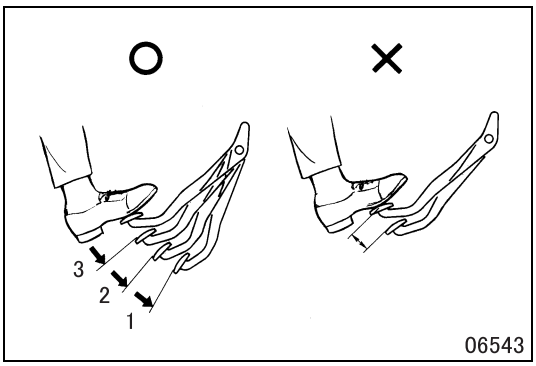

[Check 1]

- Start the engine and run it for 1 to 2 minutes. Stop the engine.
- Press the brake pedal repetitively with the normal stepping force.
- The pedal stroke should become smaller each time the pedal is pressed.

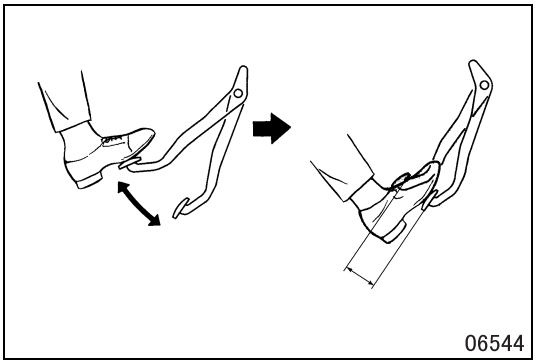

[Check 2]

- With the engine stationary, press the brake pedal several times.
- With the brake pedal pressed, start the engine. The pedal should sink slightly.

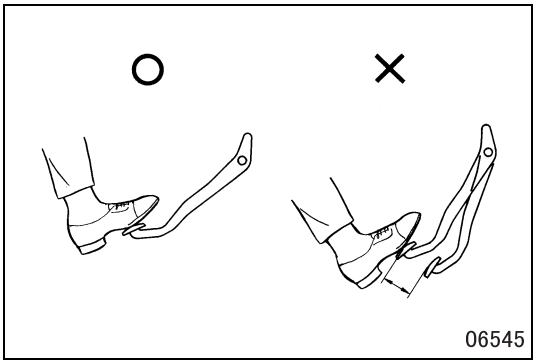

[Check 3]

- With the engine running and the brake pedal pressed, stop the engine.
- The brake pedal should maintain the same height for approximately 30 seconds.

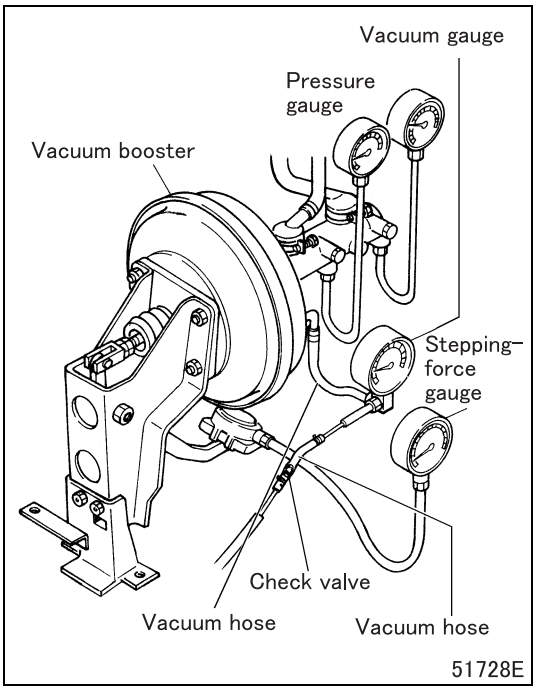

(2) Operational check with a simplified tester

(2.1) Airtightness check

- Inspect the check valve in the vacuum hose for normal operation.
- Remove the vacuum hose from the vacuum booster and connect it to the vacuum gauge.
- Connect another hose (not equipped with a check valve) onto the vacuum booster and the vacuum gauge.
- Install 2 pressure gauges and 1 stepping-force gauge as illustrated. Bleed the pressure gauges of air.
- Perform the following checks. If any fault is encountered during these checks, inspect the vacuum booster.

[Check 1]

- Start the engine. When the reading on the vacuum gauge has reached 67 kPa {19.8 in.Hg, 500 mmHg}, stop the engine.
- The vacuum lost in approximately 15 seconds of the engine stop should conform to the standard value.

[Check 2]

- Start the engine, and press the brake pedal. When the reading on the vacuum gauge has reached 67 kPa {19.8 in.Hg, 500 mmHg}, stop the engine.
- The vacuum lost in approximately 15 seconds of the engine stop should conform to the standard value.

(2.2) System characteristics check

- Perform the following system characteristics checks after the air-tightness check described above is completed.
- Perform the following checks. If any fault is encountered during these checks, inspect the vacuum booster.

[Check 1]

- Start the engine. When the reading on the vacuum gauge has reached 67 kPa {19.8 in.Hg, 500 mmHg}, press the brake pedal with the specified stepping forces.
- The fluid pressures indicated on the pressure gauges should conform to the specified values.

[Check 2]

- Start the engine. When the reading on the vacuum gauge has reached 0 kPa {0 in.Hg, 0 mmHg}, press the brake pedal with the specified stepping forces.
- The fluid pressures indicated on the pressure gauges should conform to the specified values.

(2.3) Vacuum booster performance graph

＜φ8＋φ9 inch vacuum booster, φ30.16 mm {1.19 in.} brake master cylinder＞

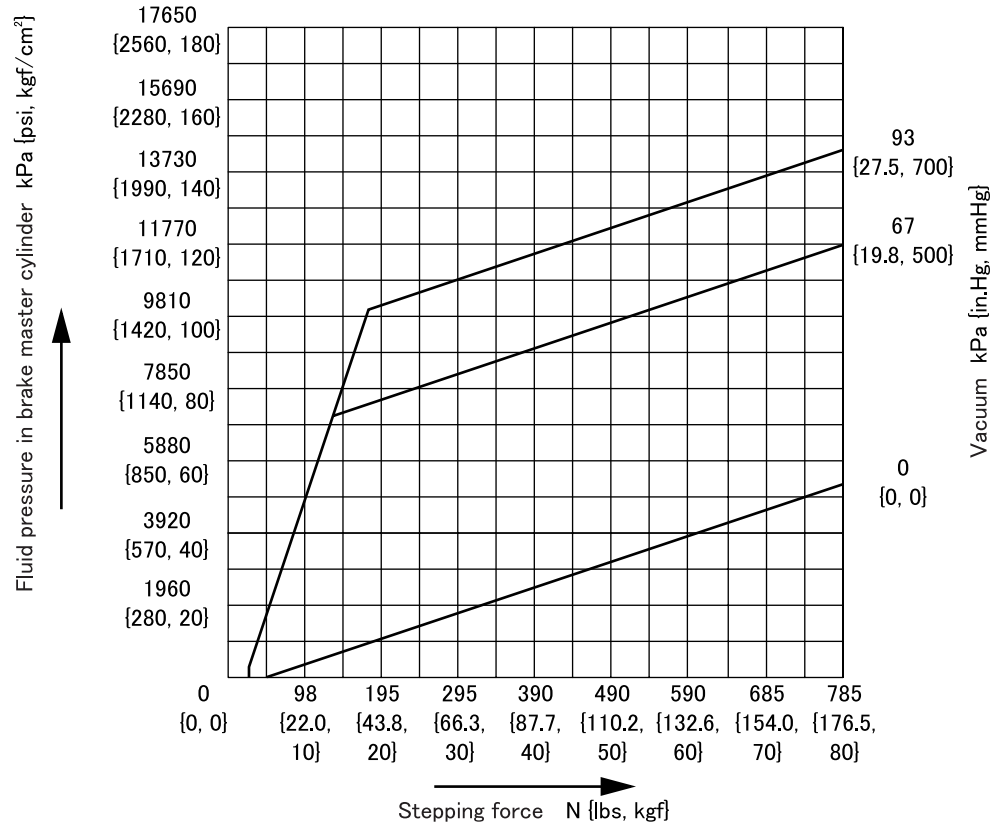

P59004N

＜φ9＋φ10 inch vacuum booster, φ30.75 mm {1.25 in.} brake master cylinder＞

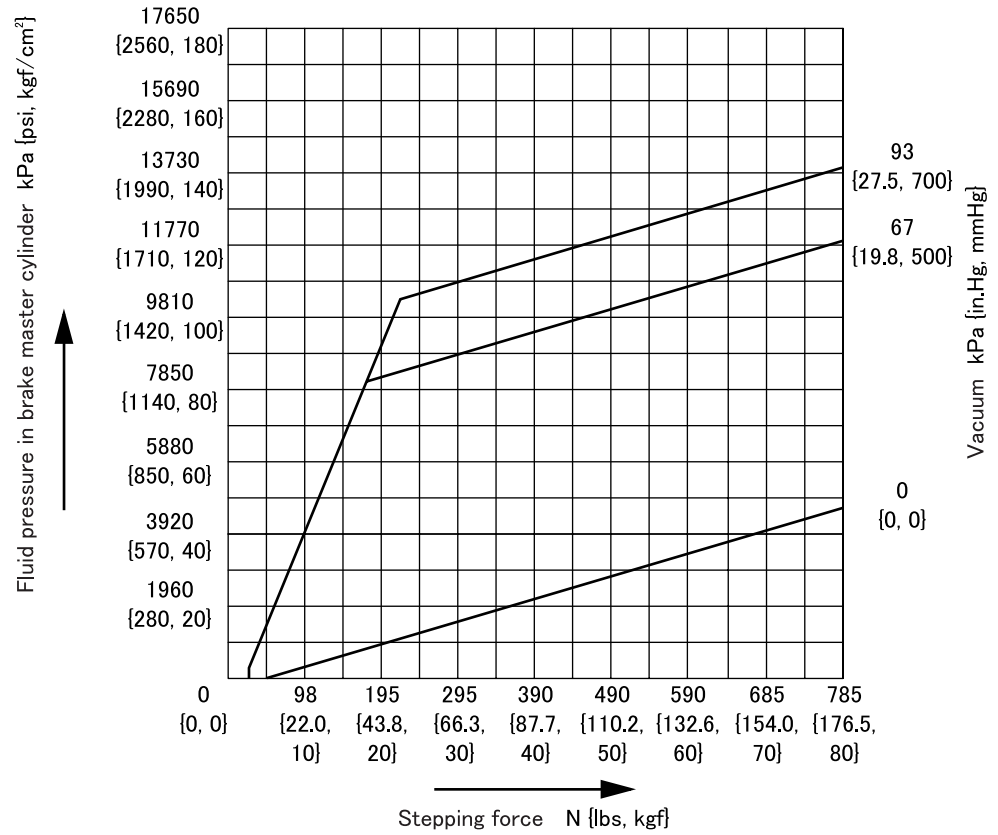

P59006N

13. Inspection of Hydraulic Booster <FE85>

Service standards

Location	Maintenance item		Standard value	Limit	Remedy
–	Fluid pressure at power steering oil temperature of 60°C {140°F} or below	Pedal pressed with a force of 98 N {22.0 lbs, 10 kgf}	4620 kPa {670 psi, 47.1 kgf/cm^2}	–	Replace
		Pedal pressed with a force of 295 N {66.3 lbs, 30 kgf}	13600 kPa {1970 psi, 138.7 kgf/cm^2}	–	

13.1 Inspection of electric equipment

- Inspect in accordance with the following flow chart.
- Before inspection, park the vehicle on a flat surface, apply the parking brake firmly, and chock the wheels.

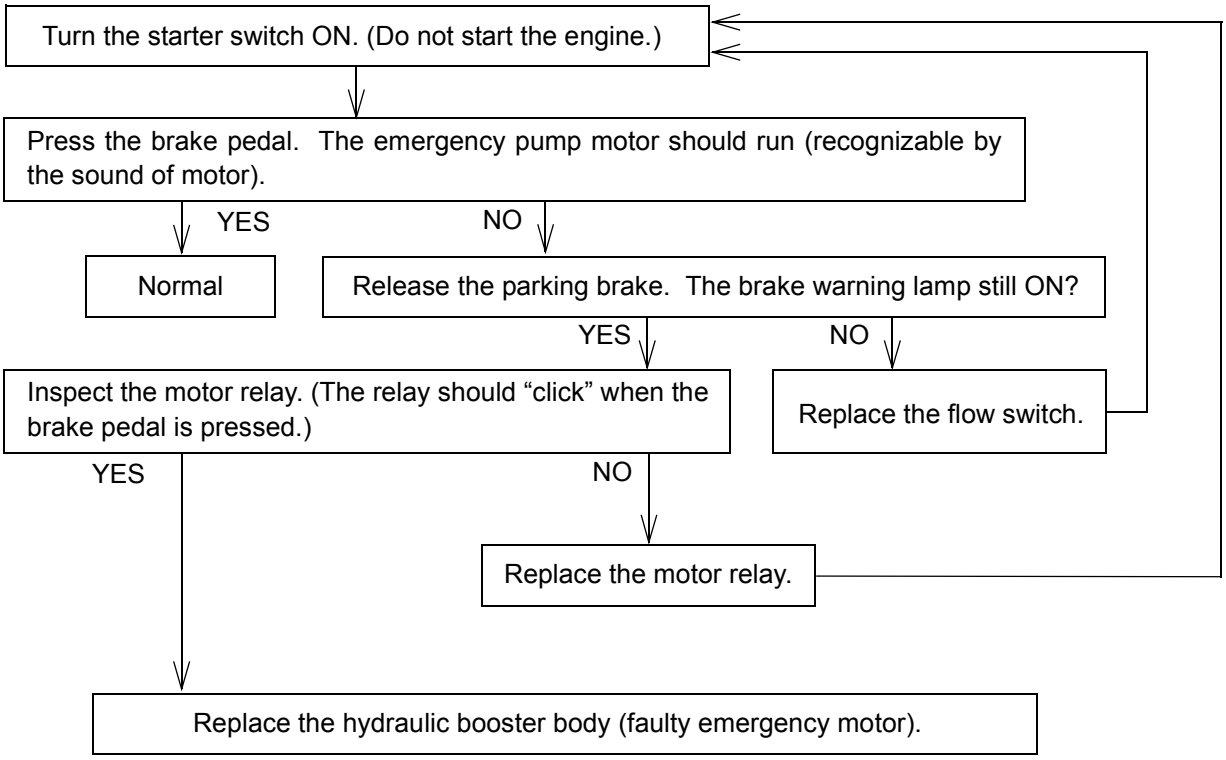

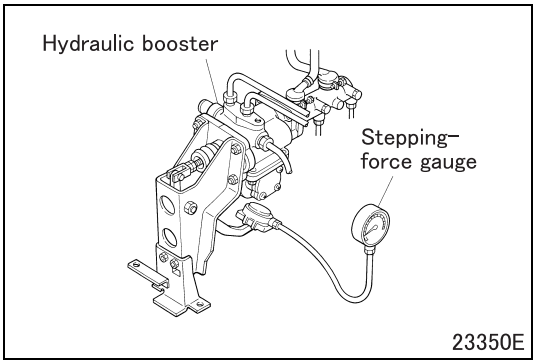

13.2 Functional check

- Install a stepping-force gauge onto the brake pedal. Remove an air bleeder from the front wheel brake, and install a pressure gauge. Bleed the gauge of air.
- Carry out performance test on the power steering system. Ensure that the system pressure is to specification.
- After confirming that the electric equipment has passed the inspection described above, press the brake pedal with varying forces. The reading of the front wheel brake fluid pressure should follow the pressure line of the graph.

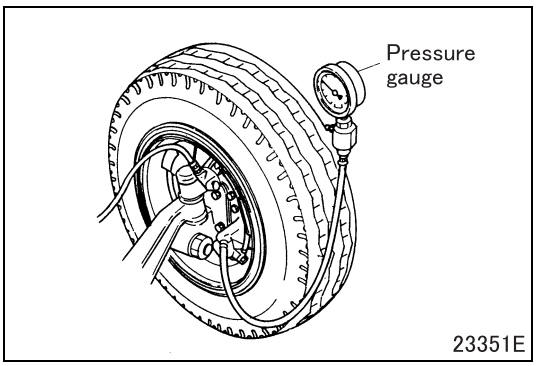

- If any fault is observed during these checks, replace the hydraulic booster.

13.3 Hydraulic booster performance graph

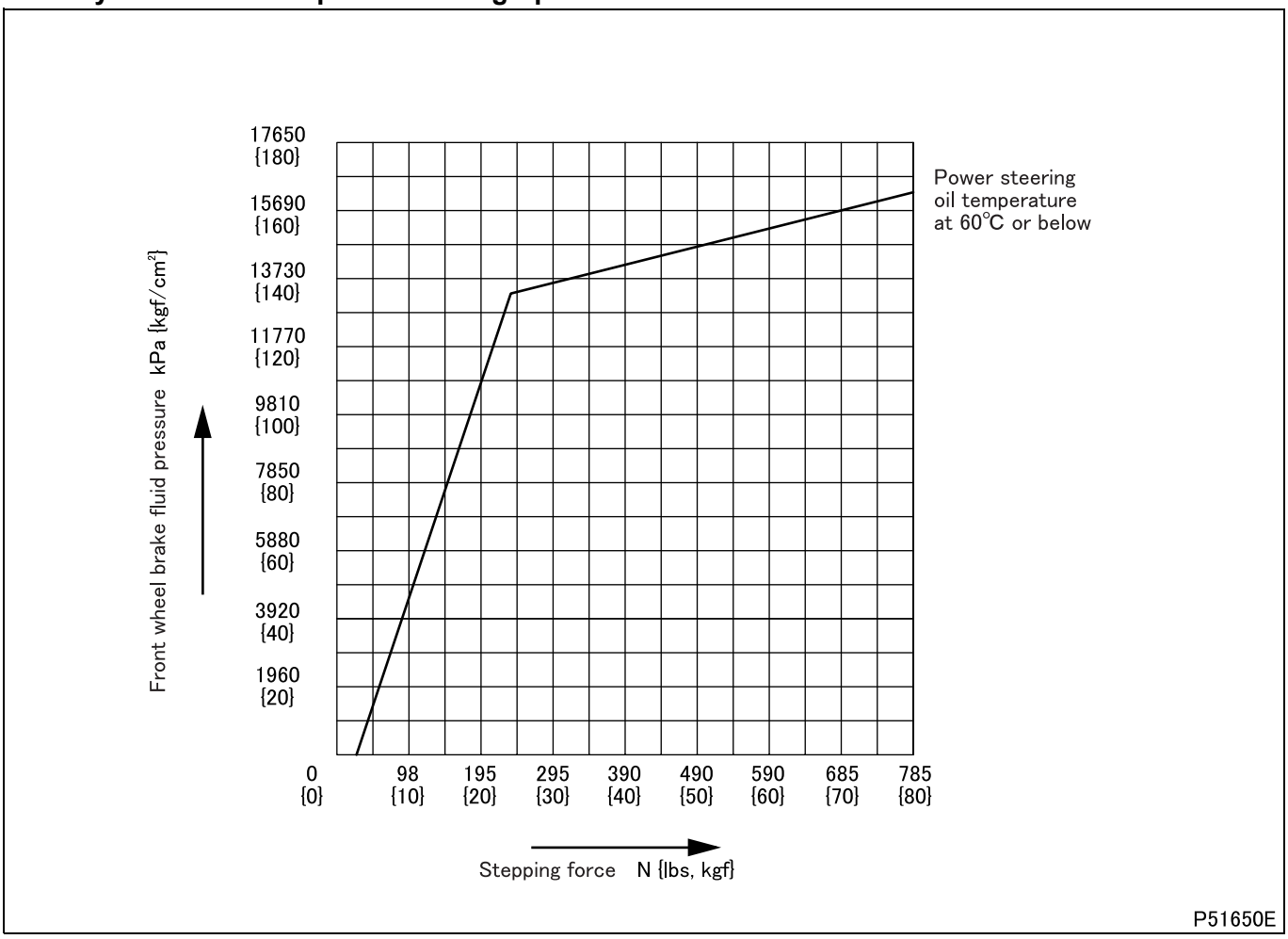

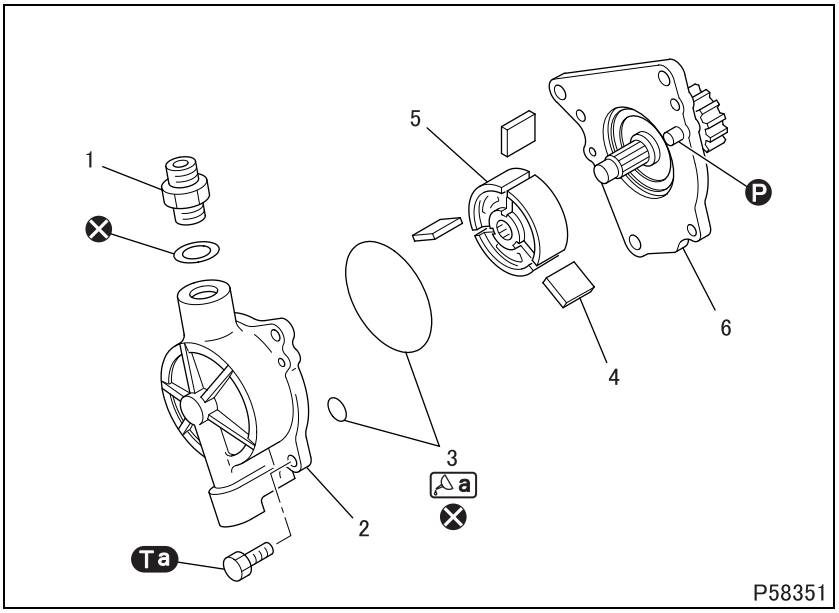

● **Disassembly sequence**

1 Check valve
2 Housing
3 O-ring
4 Vane
5 Rotor
6 Bracket

Ⓟ: Locating pin
⊗: Non-reusable parts

NOTE

- **For removal and installation procedures, see Gr11.**

● **Assembly sequence**

Follow the disassembly sequence in reverse.

Service standards

Location	Maintenance item		Standard value	Limit	Remedy
–	Time to reach vacuum of 80 kPa {23.6 in.Hg, 600 mmHg} (vacuum tank capacity: 10 L {11 qts})	At 1500 rpm	Within 20 sec.	–	Replace
		At 3000 rpm	Within 12 sec.	–	

Tightening torque (Unit: N·m {ft.lbs, kgf·m})

Mark	Parts to be tightened	Tightening torque	Remarks
Ta	Bolt (housing and bracket assembling)	8.8 ± 2 {6.5 ± 1.5, 0.9 ± 0.2}	–

Lubricant and/or sealant

Mark	Points of application	Specified lubricant and/or sealant	Quantity
a	O-ring	Engine oil	As required

BRAKE MASTER CYLINDER <WITH VACUUM BOOSTER>

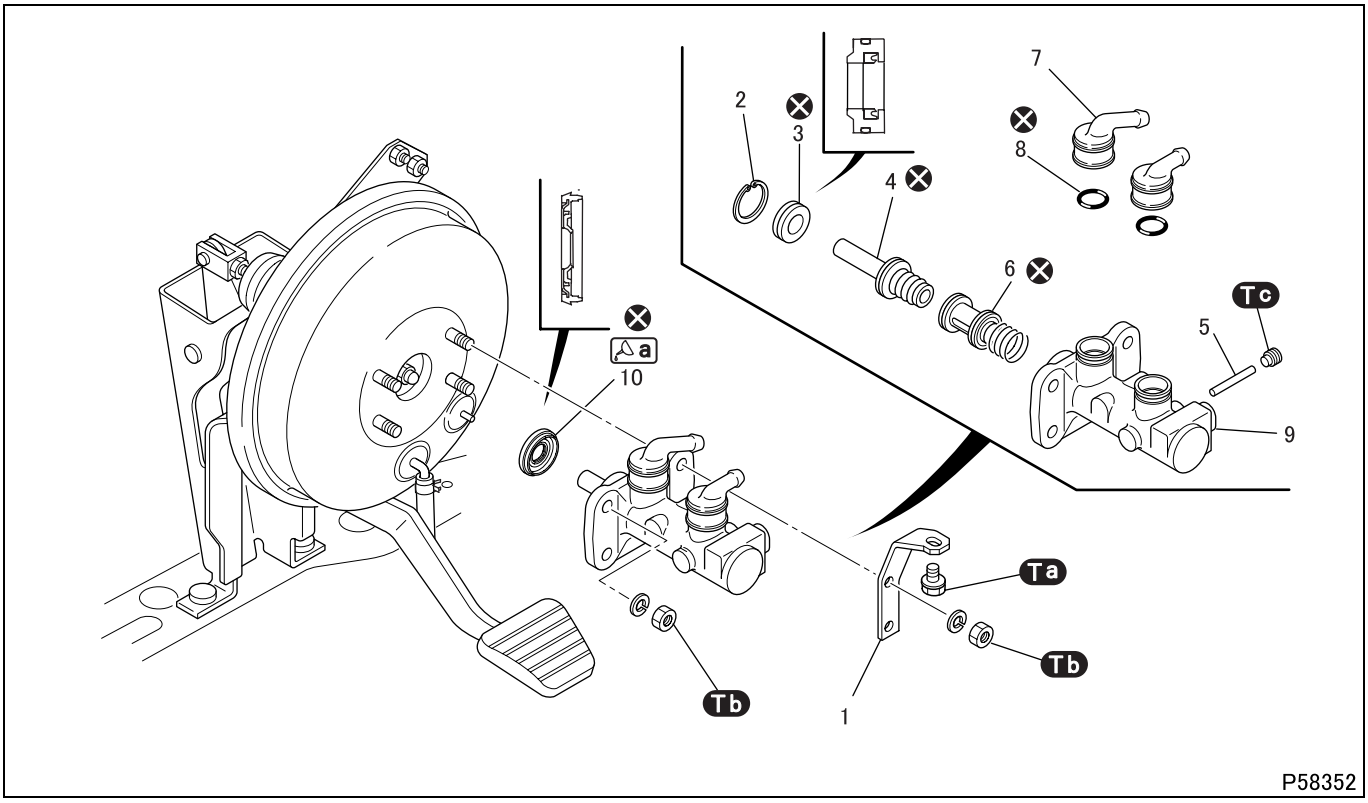

● **Disassembly sequence**

1 Bracket
2 Retaining ring
3 Piston guide
4 Primary piston
5 Set pin
6 Secondary piston
7 Connector
8 O-ring
9 Cylinder body
10 Seal

⊗: Non-reusable parts

CAUTION ⚠

- **For cleaning, use brake fluid.**

● **Assembly sequence**

Follow the disassembly sequence in reverse.

Repair kit: Master cylinder repair kit

Service standards (Unit: mm {in.})

Location	Maintenance item		Standard value	Limit	Remedy
4	Primary piston spring load	ϕ30.16 {1.19} (installed length 33.4 {1.31})	103.9 to 115.6 N {23 to 26 lbs, 10.6 to 11.8 kgf}	100.9 N {23 lbs, 10.3 kgf}	Replace
		ϕ31.75 {1.25} (installed length 32 {1.26})	113.7 to 125.4 N {26 to 28 lbs, 11.6 to 12.8 kgf}	110.7 N {25 lbs, 11.3 kgf}	
4, 6, 9	Clearance between primary and secondary pistons and cylinder body		0.02 to 0.10 {0.00079 to 0.0039}	0.2 {0.0079}	Replace
6	Secondary piston spring load	ϕ30.16 {1.19} (installed length 25.7 {1.01})	87.2 to 98 N {20 to 22 lbs, 8.9 to 10.0 kgf}	85.3 N {19 lbs, 8.7 kgf}	Replace
		ϕ31.75 {1.25} (installed length 27.1 {1.07})	81.3 to 91.1 N {18 to 20 lbs, 8.3 to 9.3 kgf}	79.4 N {18 lbs, 8.1 kgf}	

Tightening torque (Unit: N·m {ft.lbs, kgf·m})

Mark	Parts to be tightened	Tightening torque	Remarks
Ta	Bolt (bracket mounting)	9 to 14 {6.6 to 10, 0.9 to 1.4}	–
Tb	Nut (brake master cylinder mounting)	9.8 to 15.7 {7.2 to 12, 1 to 1.6}	–
Tc	Screw (set pin mounting)	8.8 to 11.8 {6.5 to 8.7, 0.9 to 1.2}	–

Lubricant and/or sealant

Mark	Points of application	Specified lubricant and/or sealant	Quantity
a	Seal lips and outer periphery	Rubber grease	As required
	Seal ring groove		

Special tools (Unit: mm {in.})

Mark	Tool name and shape	Part No.	Application
a	Support tool 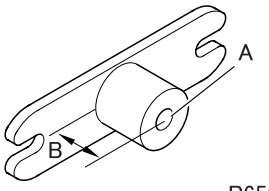 P65860 | | A | B | | ϕ8 + ϕ9 inch | No. of splines: 20 | 26 {1.02} | | ϕ9 + ϕ10 inch | No. of splines: 23 | 30 {1.18} |	<ϕ8 + ϕ9 inch> MK528894 <ϕ9 + ϕ10 inch> MK528895	Adjustment of vacuum booster push rod
b	Support tool for measurement | A | B | | 36 {1.42} | ϕ11.5 {0.45} | 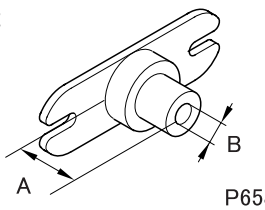 P65861	MK528896	

BRAKE MASTER CYLINDER <WITH VACUUM BOOSTER>

Mark	Tool name and shape	Part No.	Application
C	Box spanner 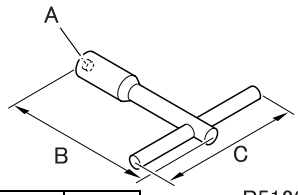 P51263 A: Width across flats: 7 (φ8 + φ9 inch); Width across flats: 8 (φ9 + φ10 inch) B: 120 {4.72} C: 120 {4.72}	<φ8 + φ9 inch> MB999007 <φ9 + φ10 inch> MB999062	Adjustment of vacuum booster push rod

◆Removal procedure◆

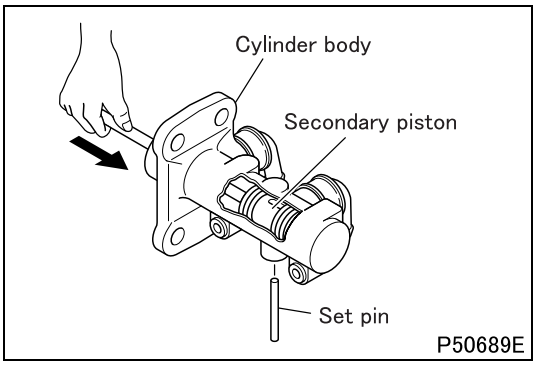

■ **Removal: Secondary piston**

- Position the cylinder body such that the set pin faces down. Using a rod or the like, compress the secondary piston to ease out the set pin.

CAUTION ⚠

- **As the secondary piston is compressed, the set pin will fall out. Be sure to catch it with hand. Do not drop it on the floor.**

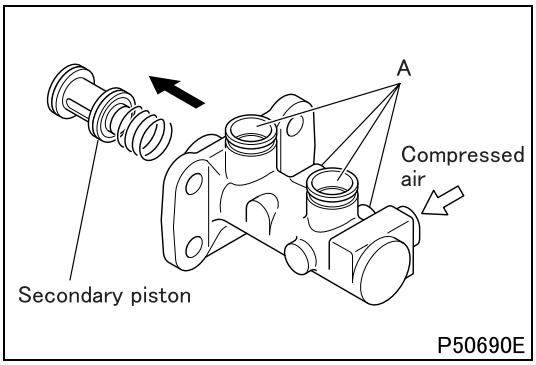

- With ports A blocked, feed compressed air in the direction of the arrow, gradually increasing pressure from 0 kPa {0 kgf/cm^2}, to remove the secondary piston.

WARNING ⚠

- **Do not apply compressed air suddenly and at high pressure. Otherwise, the secondary piston may fly out with full force.**

◆Installation procedure◆

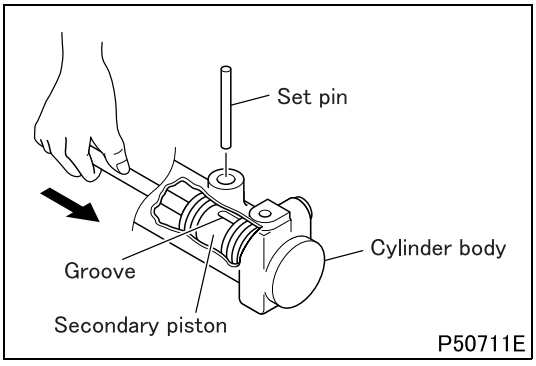

■ **Installation: Secondary piston**

- Position the cylinder body such that the set pin hole faces up. Using a rod or the like, insert the secondary piston into the cylinder body while at the same time trying to insert the set pin.

NOTE

- **If necessary, rotate the secondary piston to align the groove on the piston with the set pin hole.**

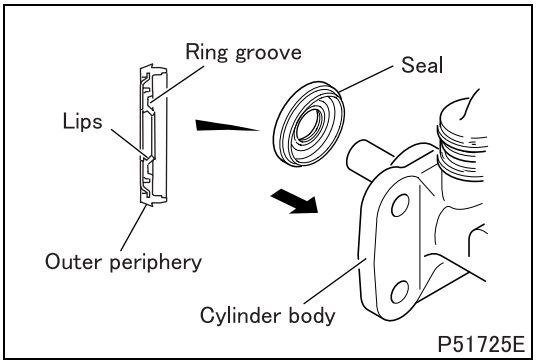

◆Work after installation◆

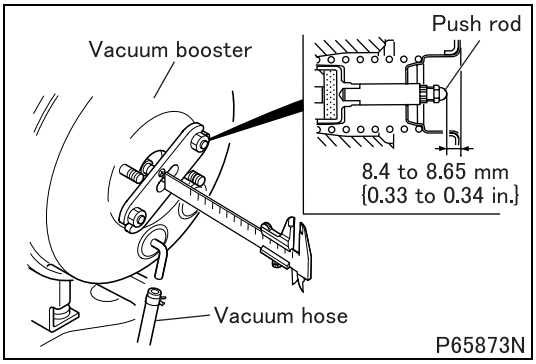

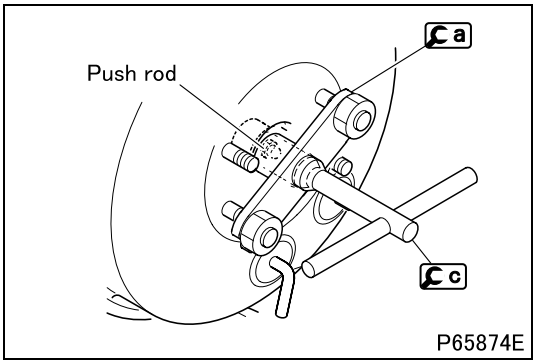

■ Installation: Seal

- Apply grease onto the lips and outer periphery of the seal. Also, pack grease into the seal's ring groove. Then, face the seal in the illustrated direction before installing it onto the cylinder body.

CAUTION ⚠

- **Ensure that the seal has been assembled correctly onto the cylinder body, i.e. facing the illustrated direction and without roll-up or damage. Otherwise, vacuum may be lost through the seal.**

■ Inspection: Brake pedal & vacuum booster

CAUTION ⚠

- **If the brake master cylinder or the primary piston is replaced, be sure to inspect and, if required, adjust the illustrated distance between the push rod and the end of the brake pedal & vacuum booster.**

[Inspection]

- Remove the vacuum hose from the brake pedal & vacuum booster to fill the vacuum booster with the atmospheric pressure.

CAUTION ⚠

- **The vacuum booster needs to be filled with the atmospheric pressure to obtain accurate results from the inspection.**

- Measure the distance (illustrated) between the push rod and the end of the brake pedal & vacuum booster.
- If the measured value does not conform to the specified value, adjust the distance as follows.

[Adjustment]

- Set the distance to the specified value by turning in or out the push rod.

BRAKE MASTER CYLINDER <WITH HYDRAULIC BOOSTER>

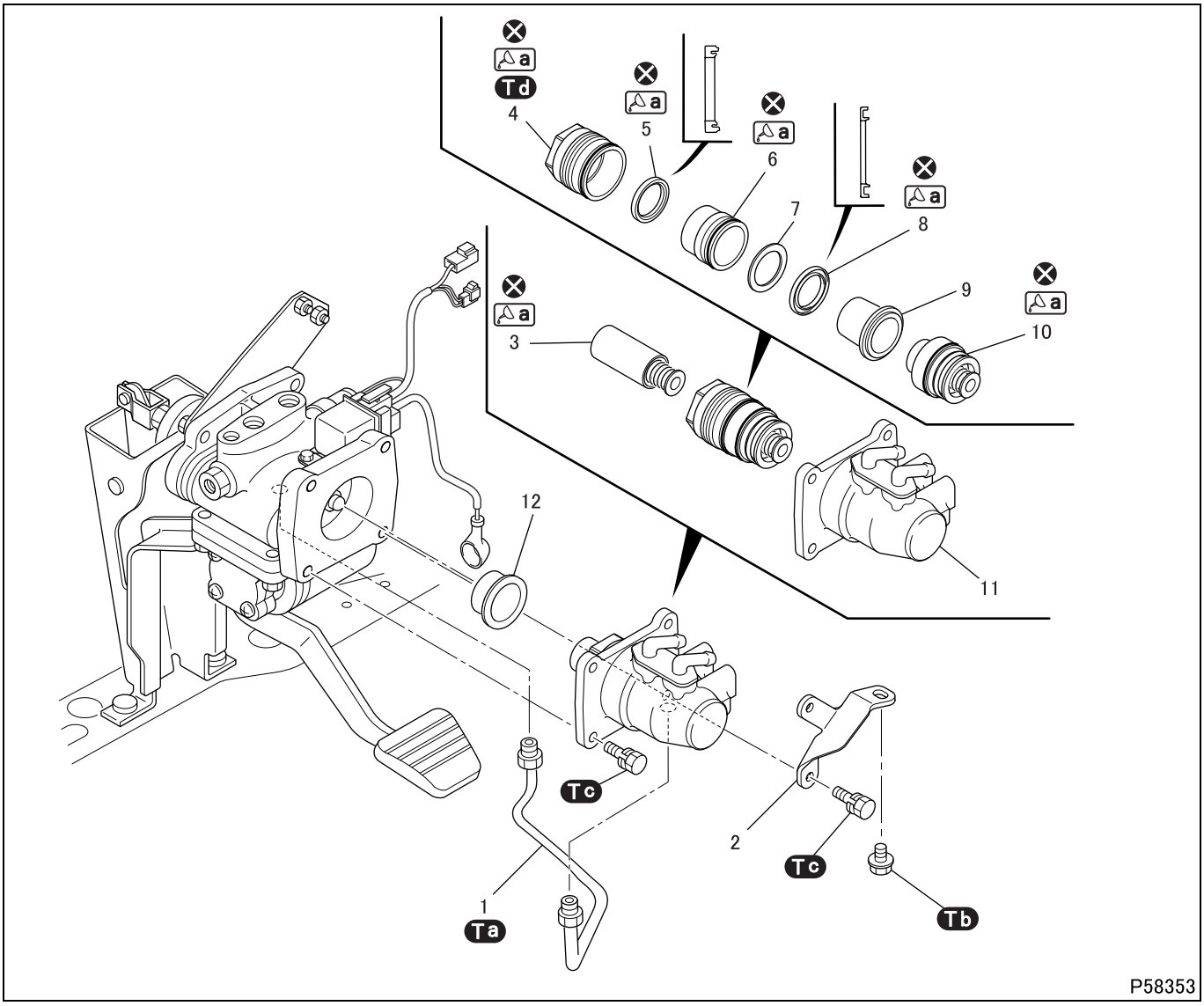

● **Disassembly sequence**

1 Brake pipe
2 Bracket
3 Primary piston
4 Cap
5 Secondary cup
6 Bushing
7 Cup spacer
8 Primary cup
9 Cup retainer
10 Secondary piston
11 Cylinder
12 Piston protector

⊗: Non-reusable parts

CAUTION ⚠

- **For cleaning, use brake fluid.**

● **Assembly sequence**

Follow the disassembly sequence in reverse.

Repair kit: Master cylinder repair kit, Cap kit

Service standards (Unit: mm {in.})

Location	Maintenance item	Standard value	Limit	Remedy
3	Primary piston spring load (installed length: 49.7 {1.96})	130 to 140 N {29 to 31 lbs, 13.3 to 14.3 kgf}	125 N {28 lbs, 12.7 kgf}	Replace
3, 10, 11	Clearance between primary and secondary pistons and cylinder	0.065 to 0.125 {0.0026 to 0.0049}	0.13 {0.0051}	Replace
10	Secondary piston spring load (installed length: 44.5 {1.75})	102 to 118 N {23 to 27 lbs, 10.4 to 11.4 kgf}	96 N {22 lbs, 9.8 kgf}	Replace

Tightening torque (Unit: N·m {ft.lbs, kgf·m})

Mark	Parts to be tightened	Tightening torque	Remarks
Ta	Brake pipe	17.2 ± 2.5 {13 ± 1.8, 1.75 ± 0.25}	–
Tb	Bolt (bracket mounting)	9 to 14 {6.6 to 10, 0.9 to 1.4}	–
Tc	Bolt (brake master cylinder mounting)	17.6 to 27.4 {13 to 20, 1.8 to 2.8}	–
Td	Cap	68.6 to 78.4 {51 to 58, 7 to 8}	–

Lubricant and/or sealant

Mark	Points of application	Specified lubricant and/or sealant	Quantity
a	Sliding face of primary piston	Rubber grease	As required
	O-ring on cap		
	Secondary cup		
	O-ring on bushing		
	Primary cup		
	Sliding face of secondary piston		

◆Installation procedure◆

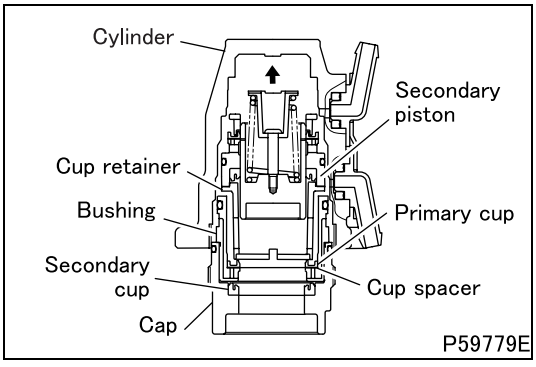

■ **Installation: Cap, secondary cup, cup spacer, primary cup, bushing, cup retainer, secondary cup and primary piston**

- With the end of the cylinder facing upward, insert each assembled part slowly.

CAUTION ⚠

- **To prevent the cup retainer from falling off, hold the cylinder with its end upward until the cap is screwed into the cylinder.**

- After screwing the cap into the cylinder, tighten it to the specified torque.
- Slowly insert the primary piston through the cap.

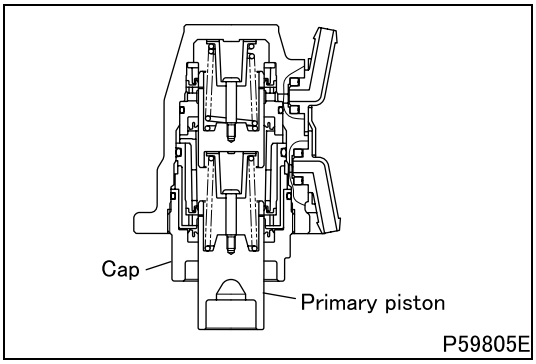

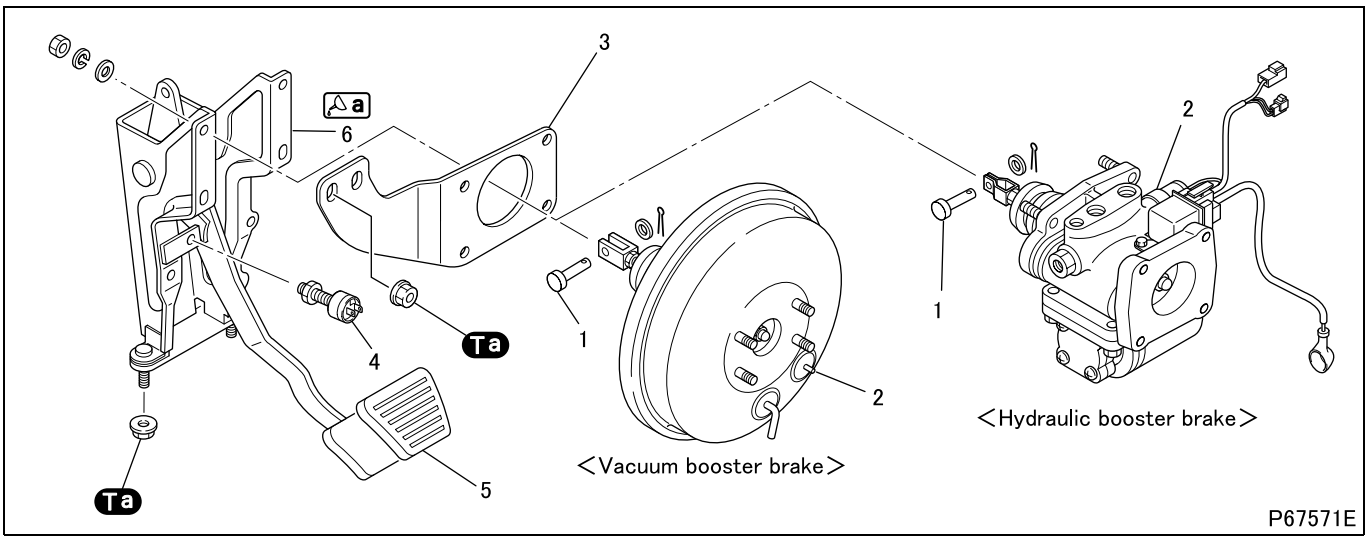

● **Disassembly sequence**

1 Clevis pin
2 Vacuum booster
<Vacuum booster brake>
Hydraulic booster (See later section.)
<Hydraulic booster brake>
3 Bracket <Vacuum booster brake>
4 Stop lamp switch
5 Pedal pad
6 Brake pedal & pedal support

CAUTION ⚠

- **Do not attempt to disassemble the vacuum booster.**

● **Assembly sequence**

Follow the disassembly sequence in reverse.

Tightening torque (Unit: N·m {ft.lbs, kgf·m})

Mark	Parts to be tightened	Tightening torque	Remarks
Ta	Nut (bracket mounting)	9 to 14 {6.6 to 10, 0.9 to 1.4}	–
	Nut (brake pedal & pedal support mounting)		

Lubricant and/or sealant

Mark	Points of application	Specified lubricant and/or sealant	Quantity
a	Return spring of brake pedal & pedal support; Inner periphery of clevis pin hole	Chassis grease [NLGI No. 1 (Li soap)]	As required

◆ **Installation procedure** ◆

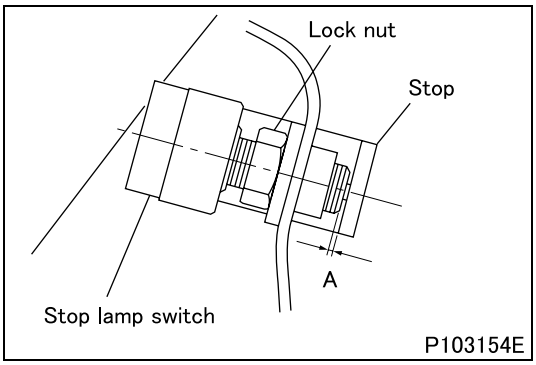

■ **Installation: Stop lamp switch**

- Set the distance A between the threaded end of the stop lamp switch and the stop for the brake pedal & pedal support to the illustrated value. Then, fix the assembly with the lock nut.
  A: 0.5 to 1.5 mm {0.020 to 0.059 in.} <Without auto cruise>
  1.5 ± 0.5 mm {0.059 ± 0.020 in.} <With auto cruise>

CAUTION ⚠

- **To prevent brake drag, ensure that the threaded end of the stop lamp switch does not interfere with the stop for the brake pedal.**

Hydraulic Booster

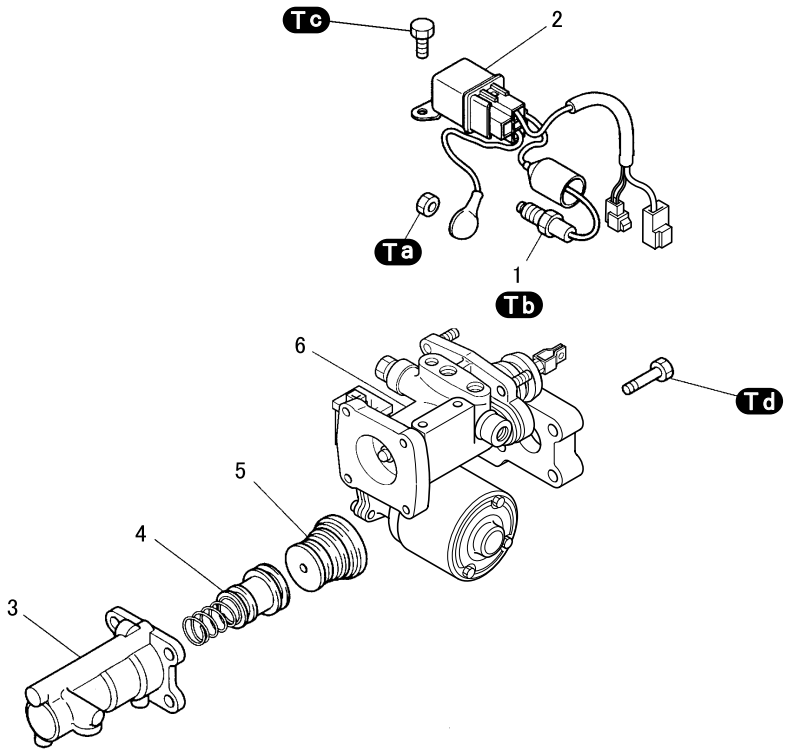

P58355

● Disassembly sequence

1 Flow switch
2 Motor relay
3 Pressure intensifying cylinder
4 Valve piston guide
5 Pressure intensifying piston
6 Hydraulic booster body

● Assembly sequence

Follow the disassembly sequence in reverse.

Repair kit: Valve piston guide, Pressure intensifying piston

Tightening torque (Unit: N·m {ft.lbs, kgf·m})

Mark	Parts to be tightened	Tightening torque	Remarks
Ta	Nut (motor relay earth mounting)	2.45 to 4.41 {1.8 to 3.3, 0.25 to 0.45}	–
Tb	Flow switch	24.5 to 34.3 {18 to 25, 2.5 to 3.5}	–
Tc	Bolt (motor relay mounting)	4.41 to 7.35 {3.3 to 5.4, 0.45 to 0.74}	–
Td	Bolt (pressure intensifying cylinder mounting)	17.6 to 27.4 {13 to 20, 1.8 to 2.8}	–

FRONT DISC BRAKE <ϕ235 mm {9.25 in.} DISC>

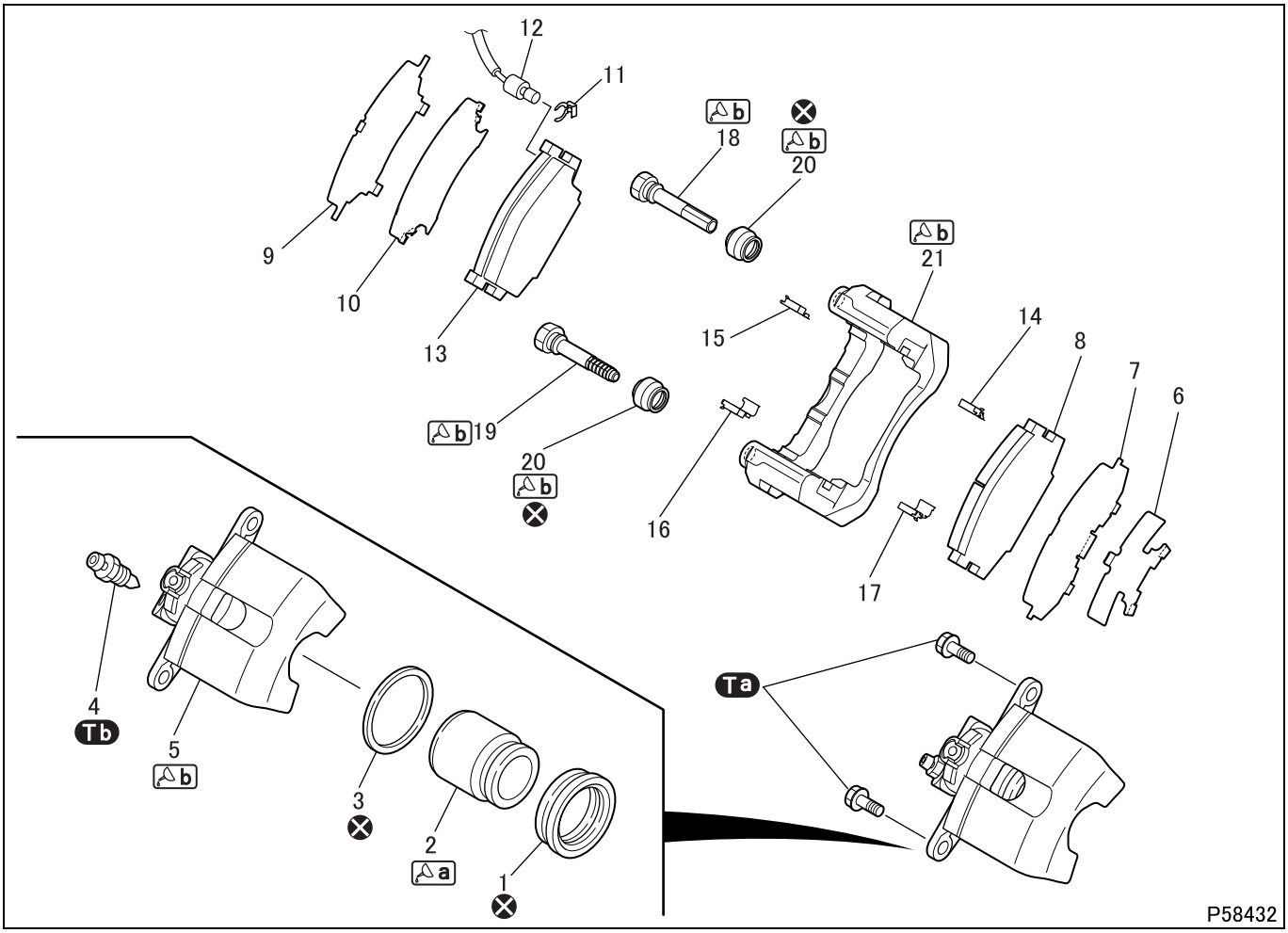

● **Disassembly sequence**

1 Piston boots
2 Piston
3 Piston seal
4 Air bleeder (lower)
5 Caliper
6 Outer shim A
7 Outer shim B
8 Outer pad
9 Inner shim A
10 Inner shim B
11 Clip
12 Pad wear indicator
13 Inner pad
14 Pad liner A
15 Pad liner B
16 Pad liner C
17 Pad liner D
18 Main slide pin
19 Sub slide pin
20 Pin boots
21 Torque member

⊗: Non-reusable parts

NOTE

- **For removal and installation of the front disc brake, see Gr26.**

● **Assembly sequence**

Follow the disassembly sequence in reverse.

Repair kit: Pad kit, Seal kit, Pad wear indicator kit, Sub pin kit

CAUTION ⚠

- **Rubber parts that are disassembled must be replaced as a seal kit.**
- **Items included in a seal kit must be lubricated with grease supplied with the kit before installation.**
- **Do not smear the surface of the outer or inner pad with lubricant. Otherwise, braking performance will be reduced.**
- **Measure disc brake drag torque after installing the disc brake. (See ON-VEHICLE INSPECTION AND ADJUSTMENT.)**

Service standards (Unit: mm {in.})

Location	Maintenance item	Standard value	Limit	Remedy
8, 13	Thickness of outer/inner pad	14 {0.55}	4 {0.16}	Replace

Tightening torque (Unit: N·m {ft.lbs, kgf·m})

Mark	Parts to be tightened	Tightening torque	Remarks
Ta	Pin bolt	40 to 50 {30 to 37, 4.0 to 5.0}	–
Tb	Air bleeder	5.8 to 8.8 {4.3 to 6.5, 0.6 to 0.9}	–

Lubricant and/or sealant

Mark	Points of application	Specified lubricant and/or sealant	Quantity
a	Outer periphery of piston	Brake fluid (SAE J1703 or FMVSS No. 116 DOT3)	As required
b	Inner periphery of caliper cylinder lips	Rubber grease	As required
	Outer periphery of main and sub slide pins		
	Pin boots mating surfaces with slide pins		
	Torque member grooves and guide holes for pin boots		

◆Installation procedure◆

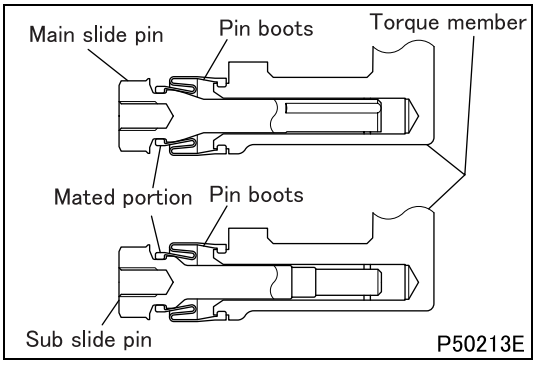

■ **Installation: Main slide pin, sub slide pin, pin boots, and torque member**

- On the torque member, apply grease onto the grooves and guide holes for the pin boots.
- Apply grease onto the outer peripheries of the main and sub slide pins. Apply grease onto the surfaces of the pin boots that are to be mated with the slide pins. Then, assemble these onto the torque member.
- Ensure that the seals on the pin boots are correctly attached onto the mated pin-boots portions.

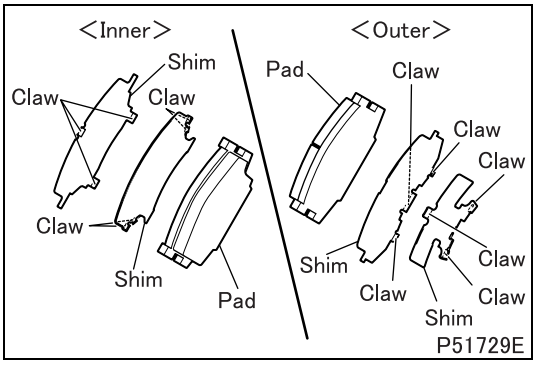

■ **Installation: Shims**

- Position shims such that they face the illustrated directions before installing them onto the pads.

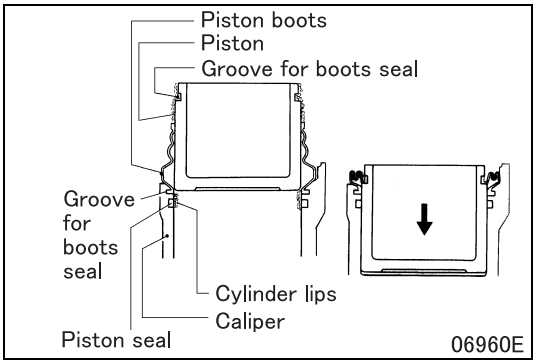

■ **Installation: Piston boots, piston, and piston seal**

- Apply brake fluid onto the outer periphery of the piston. Then, insert the piston boots over the piston.
- On the piston seal, spread the grease, already applied on it, evenly over the seal. Then, install the seal into the groove on the caliper.
- Apply grease evenly along the inner periphery of the cylinder lips on the caliper.
- Install the caliper-end seal of the piston boots into the groove on the caliper.
- Press fit the piston further into the boots. Ensure that the piston-end seal of the piston boots is engaged in the groove on the piston.

M E M O

FRONT DISC BRAKE <ϕ252 mm {9.92 in.} DISC>

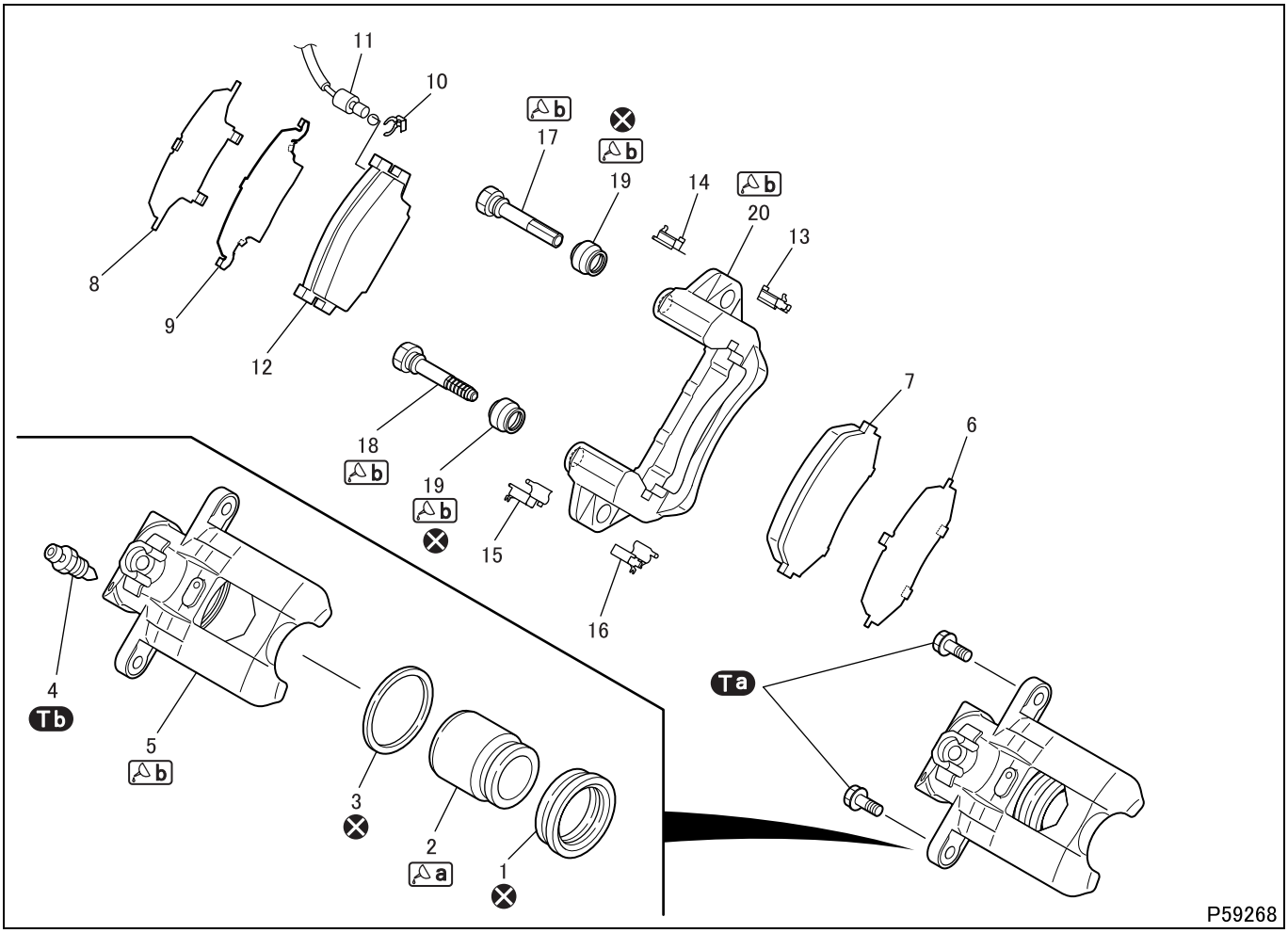

● **Disassembly sequence**

1 Piston boots
2 Piston
3 Piston seal
4 Air bleeder (lower)
5 Caliper
6 Outer shim
7 Outer pad
8 Inner shim A
9 Inner shim B
10 Clip (upper RH only)
11 Pad wear indicator (upper RH only)
12 Inner pad
13 Pad liner A
14 Pad liner B
15 Pad liner C
16 Pad liner D
17 Main slide pin
18 Sub slide pin
19 Pin boots
20 Torque member

⊗: Non-reusable parts

NOTE

- **For removal and installation of the front disc brake, see Gr26A.**

● **Assembly sequence**

Follow the disassembly sequence in reverse.

Repair kit: Pad kit, Seal kit, Pad wear indicator kit, Sub pin kit

CAUTION ⚠

- **Rubber parts that are disassembled must be replaced as a seal kit.**
- **Items included in a seal kit must be lubricated with grease supplied with the kit before installation.**
- **Do not smear the surface of the outer or inner pad with lubricant. Otherwise, braking performance will be reduced.**
- **Measure disc brake drag troque after installing the disc brake. (See ON-VEHICLE INSPECTION AND ADJUSTMENT.)**

Service standards (Unit: mm {in.})

Location	Maintenance item	Standard value	Limit	Remedy
7, 10	Thickness of outer/inner pad	14 {0.55}	4 {0.16}	Replace

Tightening torque (Unit: N·m {ft.lbs, kgf·m})

Mark	Parts to be tightened	Tightening torque	Remarks
Ta	Pin bolt	40 to 50 {30 to 37, 4.1 to 5.1}	–
Tb	Air bleeder	5.8 to 8.8 {4.3 to 6.5, 0.6 to 0.9}	–

Lubricant and/or sealant

Mark	Points of application	Specified lubricant and/or sealant	Quantity
a	Outer periphery of piston	Brake fluid (SAE J1703 or FMVSS No. 116 DOT3)	As required
b	Inner periphery of caliper cylinder lips	Rubber grease	As required
	Outer periphery of main and sub slide pins		
	Pin boots mating surfaces with slide pins		
	Torque member grooves and guide holes for pin boots		

◆Installation procedure◆

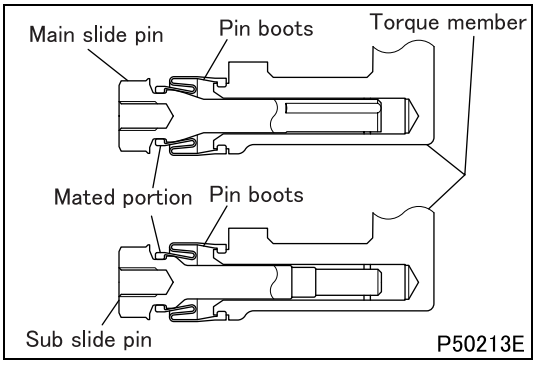

■ Installation: Main slide pin, sub slide pin, pin boots, and torque member

- On the torque member, apply grease onto the grooves and guide holes for the pin boots.
- Apply grease onto the outer peripheries of the main and sub slide pins. Apply grease onto the surfaces of the pin boots that are to be mated with the slide pins. Then, assemble these onto the torque member.
- Ensure that the seals on the pin boots are correctly attached onto the mated pin-boots portions.

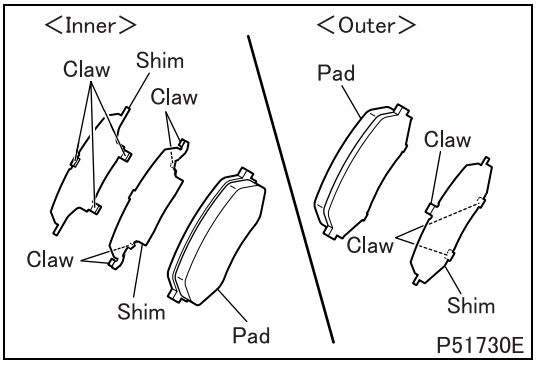

■ Installation: Shims

- Position shims such that they face the illustrated directions before installing them onto the pads.

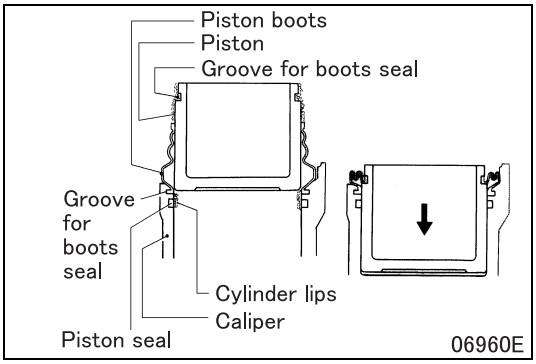

■ **Installation: Piston boots, piston, and piston seal**

- Apply brake fluid onto the outer periphery of the piston. Then, insert the piston boots over the piston.
- On the piston seal, spread the grease, already applied on it, evenly over the seal. Then, install the seal into the groove on the caliper.
- Apply grease evenly along the inner periphery of the cylinder lips on the caliper.
- Install the caliper-end seal of the piston boots into the groove on the caliper.
- Press fit the piston further into the boots. Ensure that the piston-end seal of the piston boots is engaged in the groove on the piston.

M E M O

FRONT DRUM BRAKE

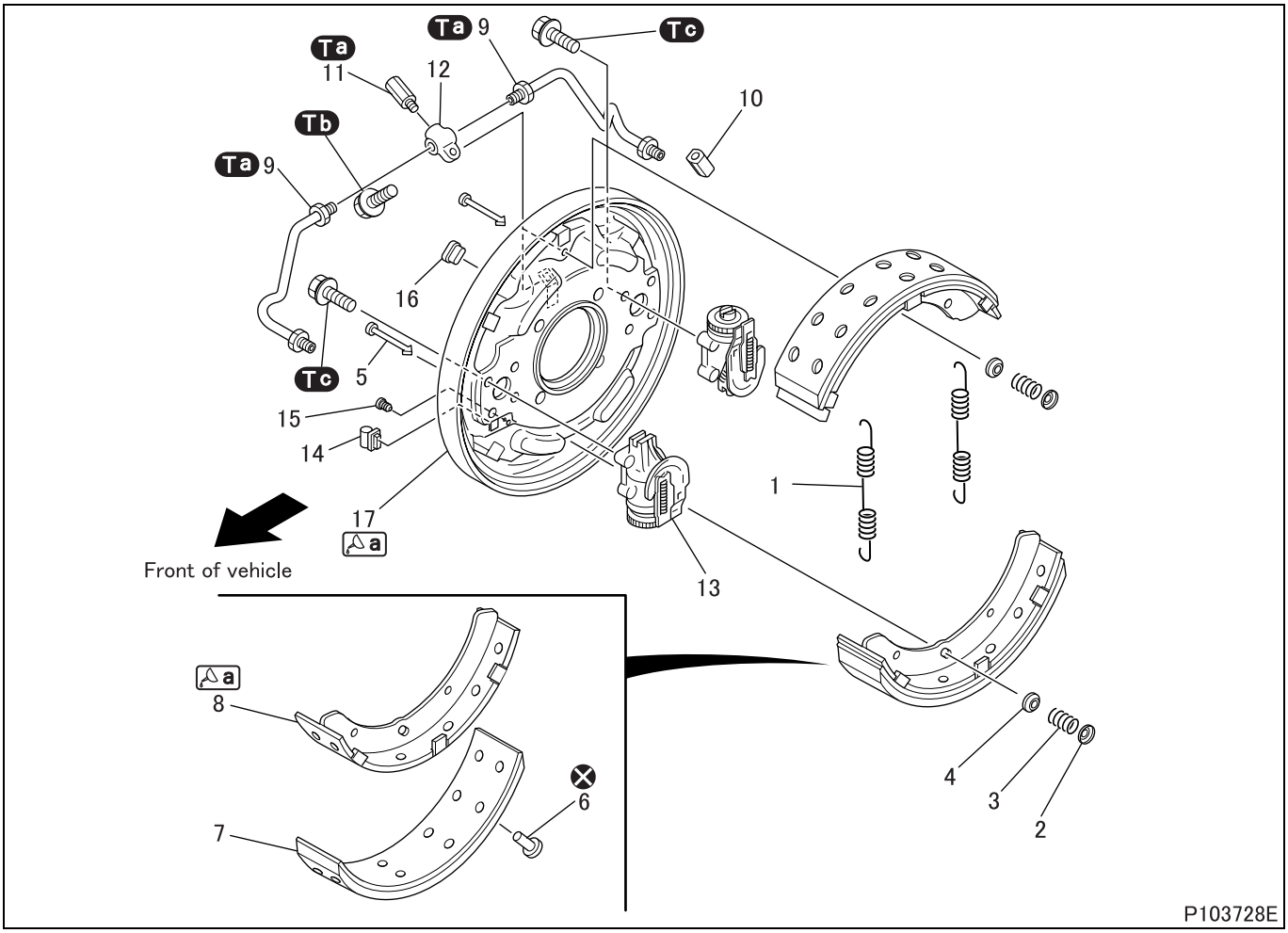

● **Disassembly sequence**

1 Return spring
2 Shoe hold-down cup
3 Shoe hold-down spring
4 Shoe hold-down cup
5 Shoe hold-down pin
6 Rivet
7 Brake lining
8 Brake shoe
9 Brake pipe
10 Spacer
11 Extension
12 Connector
13 Wheel cylinder (See later section.)
14 Cover
15 Cover
16 Cover
17 Backing plate

⊗: Non-reusable parts

NOTE

- **For removal and installation procedures of the front drum brake, see Gr26B.**

● **Assembly sequence**

Follow the disassembly sequence in reverse.

Repair kit: Brake lining kit

CAUTION ⚠

- **Do not smear the surface of the brake lining with lubricant. Otherwise, braking performance will be reduced.**
- **When replacing the brake lining, clean the threaded portions of the wheel cylinder adjuster and adjust screw and coat them with rubber grease.**
- **Adjust clearance between brake drum and shoe after installing the drum brake. (See ON-VEHICLE INSPECTION AND ADJUSTMENT.)**

Service standards (Unit: mm {in.})

Location	Maintenance item	Standard value	Limit	Remedy
1	Return spring load (installed length 190 {7.48})	195 to 235 N {44 to 53 lbs, 19.8 to 24.2 kgf}	175 N {39 lbs, 18.0 kgf}	Replace
7	Brake lining thickness	8.8 {0.35}	4.0 {0.16}	Replace

Tightening torque (Unit: N·m {ft.lbs, kgf·m})

Mark	Parts to be tightened	Tightening torque	Remarks
Ta	Brake pipe	13 to 15 {9.6 to 11, 1.3 to 1.5}	–
	Extension		
Tb	Bolt (connector mounting)	7.8 to 12 {5.8 to 8.9, 0.8 to 1.2}	–
Tc	Bolt (wheel cylinder mounting)	37 to 49 {27 to 36, 3.8 to 5.0}	–

Lubricant and/or sealant

Mark	Points of application	Specified lubricant and/or sealant	Quantity
a	Contact areas between brake shoe and wheel cylinder	Brake grease	As required
	Contact areas between backing plate and brake shoe		

◆Removal procedure◆

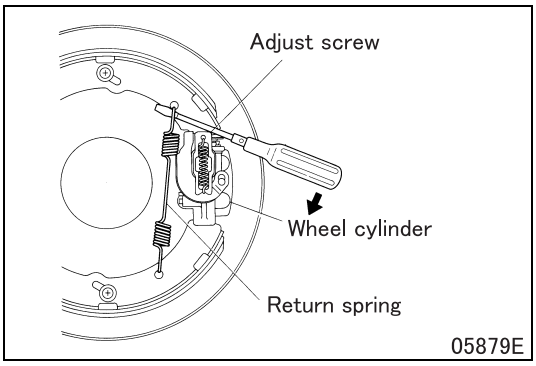

■ Removal: Return spring

- Using a flat-head screwdriver, remove the return spring. To do this, rest the screwdriver on the wheel cylinder adjust screw. Then, with the adjust screw as a fulcrum, engage the screwdriver with the spring hook and pry away the spring.

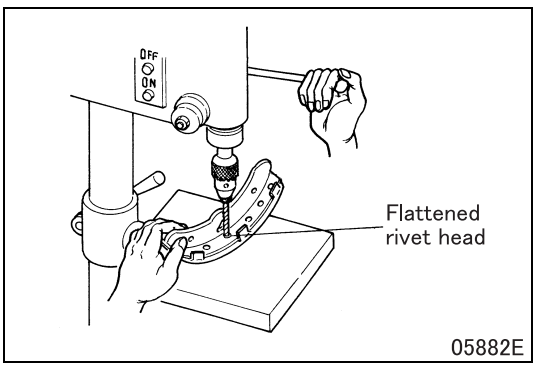

■ Removal: Brake lining

- Using a drilling machine, break the flattened rivet heads on the brake shoe side to release the brake lining.

◆Inspection procedure◆

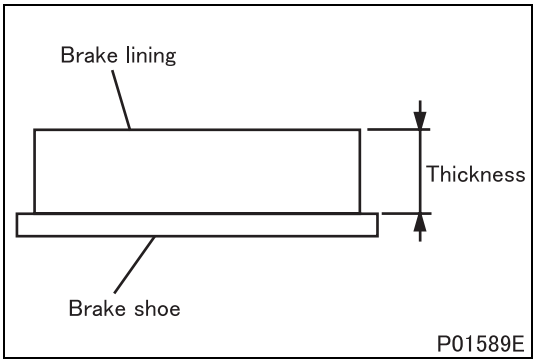

■ **Inspection: Brake shoe**

- Measure the thickness of the brake lining. If the measured value is less than the limit, replace all of the brake linings on the same axle.

CAUTION ⚠

- **Brake linings used on the same axle should be in the same size and have the same identification mark. Otherwise, braking performance can be different from left to right.**

◆Installation procedure◆

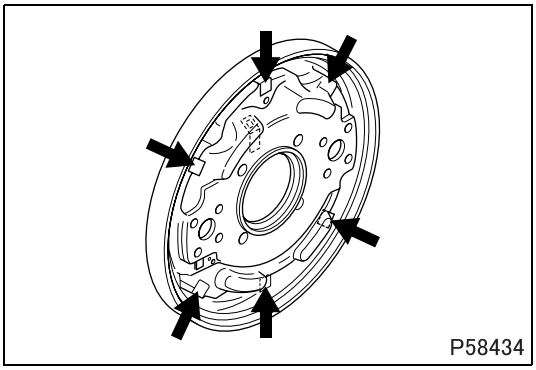

■ **Installation: Backing plate**

- Grease the backing plate at the illustrated locations.

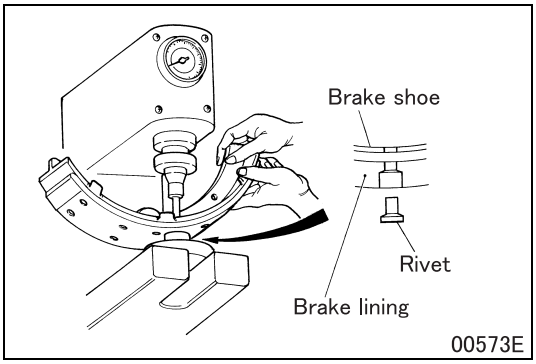

■ **Installation: Brake lining**

- Using cleaning fluid, clean the surface of the brake shoe to which the brake lining is to be mounted. Dry the brake shoe.
- Insert rivets from the lining to the shoe. Stake them, starting from the center of the shoe and moving towards the ends. Ensure that the shoe-to-lining clearances conform to the following specifications.
  - Around the rivets: 0.05 {0.0020 in.} mm or less
  - Along the shoe/lining sides: 0.4 mm {0.016 in.} or less
  - Along the shoe/lining ends: 0.2 mm {0.0078 in.} or less
- Stake the rivets with a force of 17650 ± 980 N {38920 ± 2160 lbs, 1800 ± 100 kgf}.

CAUTION ⚠

- **Replace all of the brake linings on the same axle and the brake linings should be in the same size and have the same identification mark. Otherwise, braking performance can be different from left to right.**

- After assembly, check the drum-to-lining contact. Correct as required.

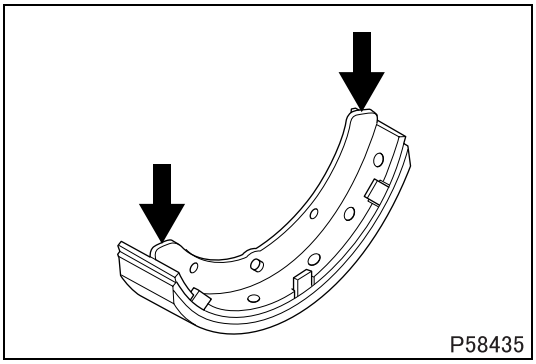

■ **Installation: Brake shoe**

- Grease the brake shoe at the illustrated locations.

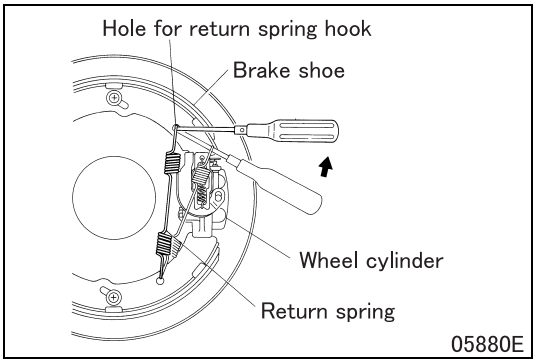

■ **Installation: Return spring**

- Hook the end of the return spring that has a smaller number of coils onto the brake shoe on the adjust screw side of the wheel cylinder.
- Engage a small Phillips screwdriver into the return spring hook. Then, using the screwdriver insert the spring hook into the hook hole in the brake shoe and attach the hook onto the shoe.

FRONT DRUM BRAKE

Wheel Cylinder

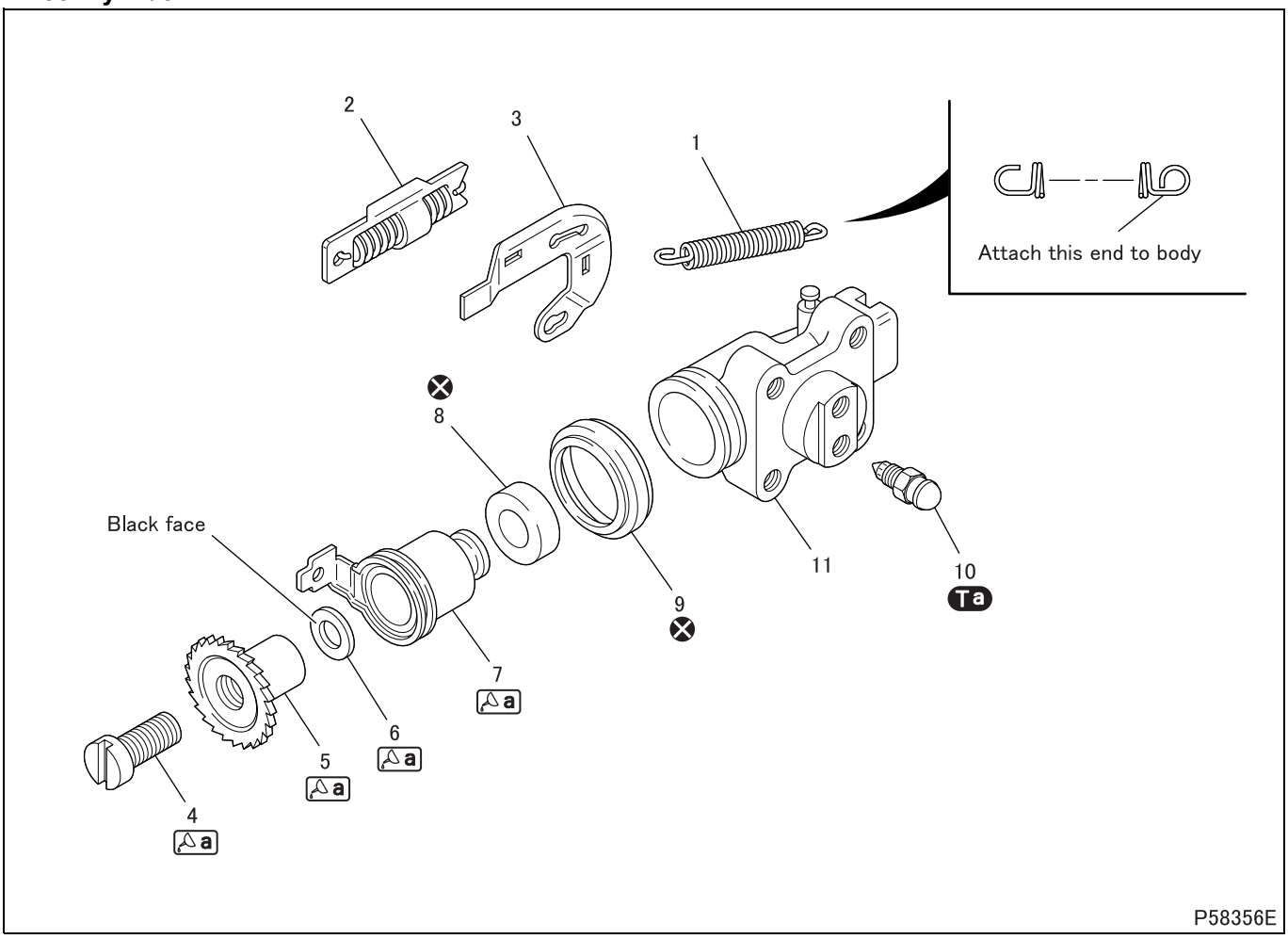

● **Disassembly sequence**

1 Spring
2 Spring & fitting
3 Lever
4 Adjust screw
5 Adjuster
6 Washer
7 Piston
8 Wheel cylinder cup
9 Boots
10 Air bleeder
11 Body

⊗: Non-reusable parts

● **Assembly sequence**

Follow the disassembly sequence in reverse.

Repair kit: Wheel cylinder kit

Service standards (Unit: mm {in.})

Location	Maintenance item	Standard value	Limit	Remedy
8, 11	Piston-to-body clearance	0.02 to 0.08 {0.00079 to 0.031}	0.2 {0.0079}	Replace

Tightening torque (Unit: N·m {ft.lbs, kgf·m})

Mark	Parts to be tightened	Tightening torque	Remarks
Ta	Air bleeder	6.9 to 8.8 {5.1 to 6.5, 0.7 to 0.9}	–

Lubricant and/or sealant

Mark	Points of application	Specified lubricant and/or sealant	Quantity
a	Threaded portion of adjust screw	Rubber grease	As required
	Sliding face of adjuster		
	Both sides of washer		
	Sliding face of piston		

REAR DISC BRAKE <ϕ235 mm {9.25 in.} DISC>

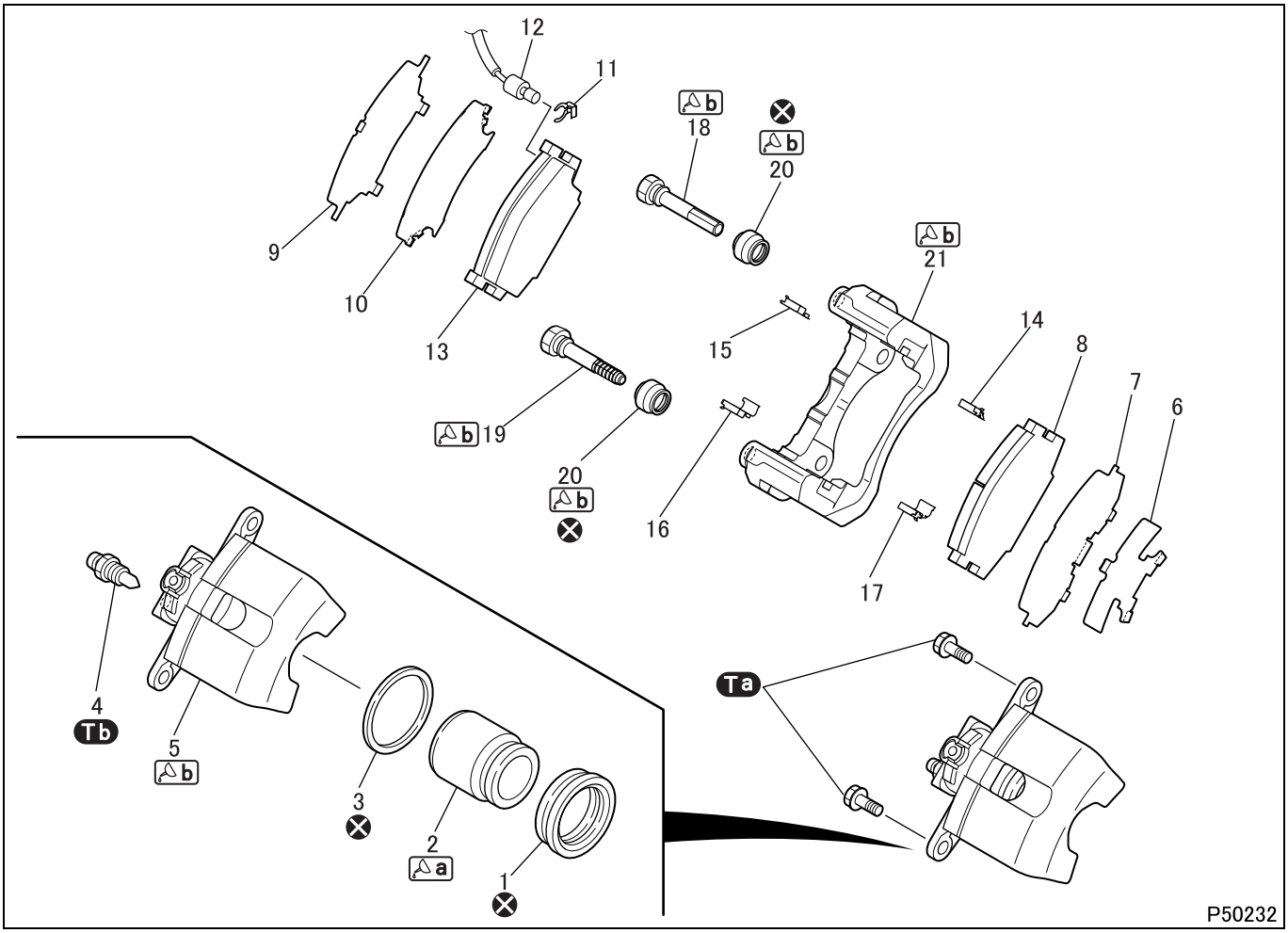

● **Disassembly sequence**

1 Piston boots
2 Piston
3 Piston seal
4 Air bleeder (front)
5 Caliper
6 Outer shim A
7 Outer shim B
8 Outer pad
9 Inner shim A
10 Inner shim B
11 Clip (rear)
12 Pad wear indicator (rear)
13 Inner pad
14 Pad liner A
15 Pad liner B
16 Pad liner C
17 Pad liner D
18 Main slide pin
19 Sub slide pin
20 Pin boots
21 Torque member

⊗: Non-reusable parts

NOTE

- **For removal and installation of the rear disc brake, see Gr27.**

● **Assembly sequence**

Follow the disassembly sequence in reverse.

Repair kit: Pad kit, Seal kit, Pad wear indicator kit, Sub pin kit

CAUTION ⚠

- **Rubber parts that are disassembled must be replaced as a seal kit.**
- **Items included in a seal kit must be lubricated with grease supplied with the kit before installation.**
- **Do not smear the surface of the outer or inner pad with lubricant. Otherwise, braking performance will be reduced.**
- **Measure disc brake drag torque after installing the disc brake. (See ON-VEHICLE INSPECTION AND ADJUSTMENT.)**

Service standards (Unit: mm {in.})

Location	Maintenance item	Standard value	Limit	Remedy
8, 13	Thickness of outer/inner pad	14 {0.55}	4 {0.16}	Replace

Tightening torque (Unit: N·m {ft.lbs, kgf·m})

Mark	Parts to be tightened	Tightening torque	Remarks
Ta	Pin bolt	40 to 50 {30 to 37, 4.1 to 5.1}	–
Tb	Air bleeder	5.8 to 8.8 {4.3 to 6.5, 0.6 to 0.9}	–

Lubricant and/or sealant

Mark	Points of application	Specified lubricant and/or sealant	Quantity
a	Outer periphery of piston	Brake fluid (SAE J1703 or FMVSS No. 116 DOT3)	As required
b	Inner periphery of caliper cylinder lips	Rubber grease	As required
	Outer periphery of main and sub slide pins		
	Pin boots mating surfaces with slide pins		
	Torque member grooves and guide holes for pin boots		

◆Installation procedure◆

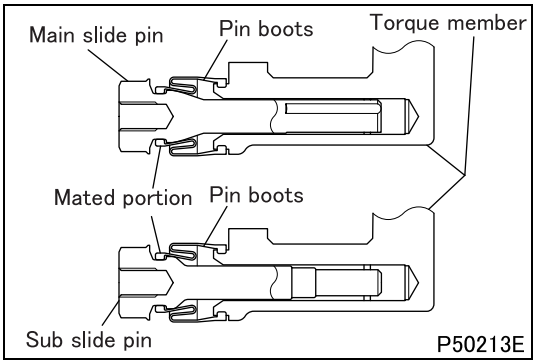

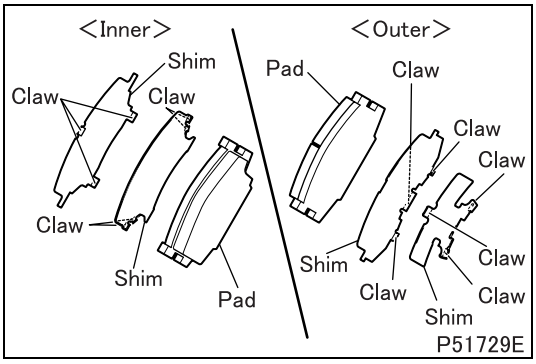

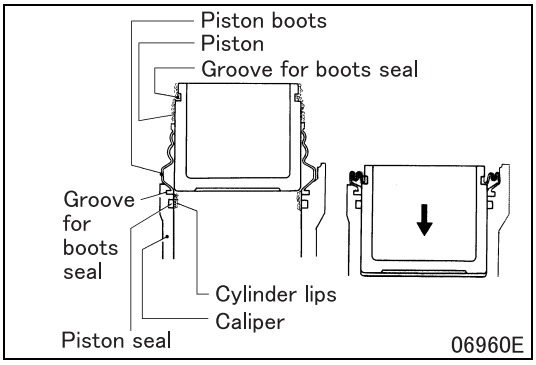

■ Installation: Main slide pin, sub slide pin, pin boots, and torque member

- On the torque member, apply grease onto the grooves and guide holes for the pin boots.
- Apply grease onto the outer peripheries of the main and sub slide pins. Apply grease onto the surfaces of the pin boots that are to be mated with the slide pins. Then, assemble these onto the torque member.
- Ensure that the seals on the pin boots are correctly attached onto the mated pin-boots portions.

■ Installation: Shims

- Position shims such that they face the illustrated directions before installing them onto the pads.

■ Installation: Piston boots, piston, and piston seal

- Apply brake fluid onto the outer periphery of the piston. Then, insert the piston boots over the piston.
- On the piston seal, spread the grease, already applied on it, evenly over the seal. Then, install the seal into the groove on the caliper.
- Apply grease evenly along the inner periphery of the cylinder lips on the caliper.
- Install the caliper-end seal of the piston boots into the groove on the caliper.
- Press fit the piston further into the boots. Ensure that the piston-end seal of the piston boots is engaged in the groove on the piston.

REAR DISC BRAKE <ϕ252 mm {9.92 in.} DISC>

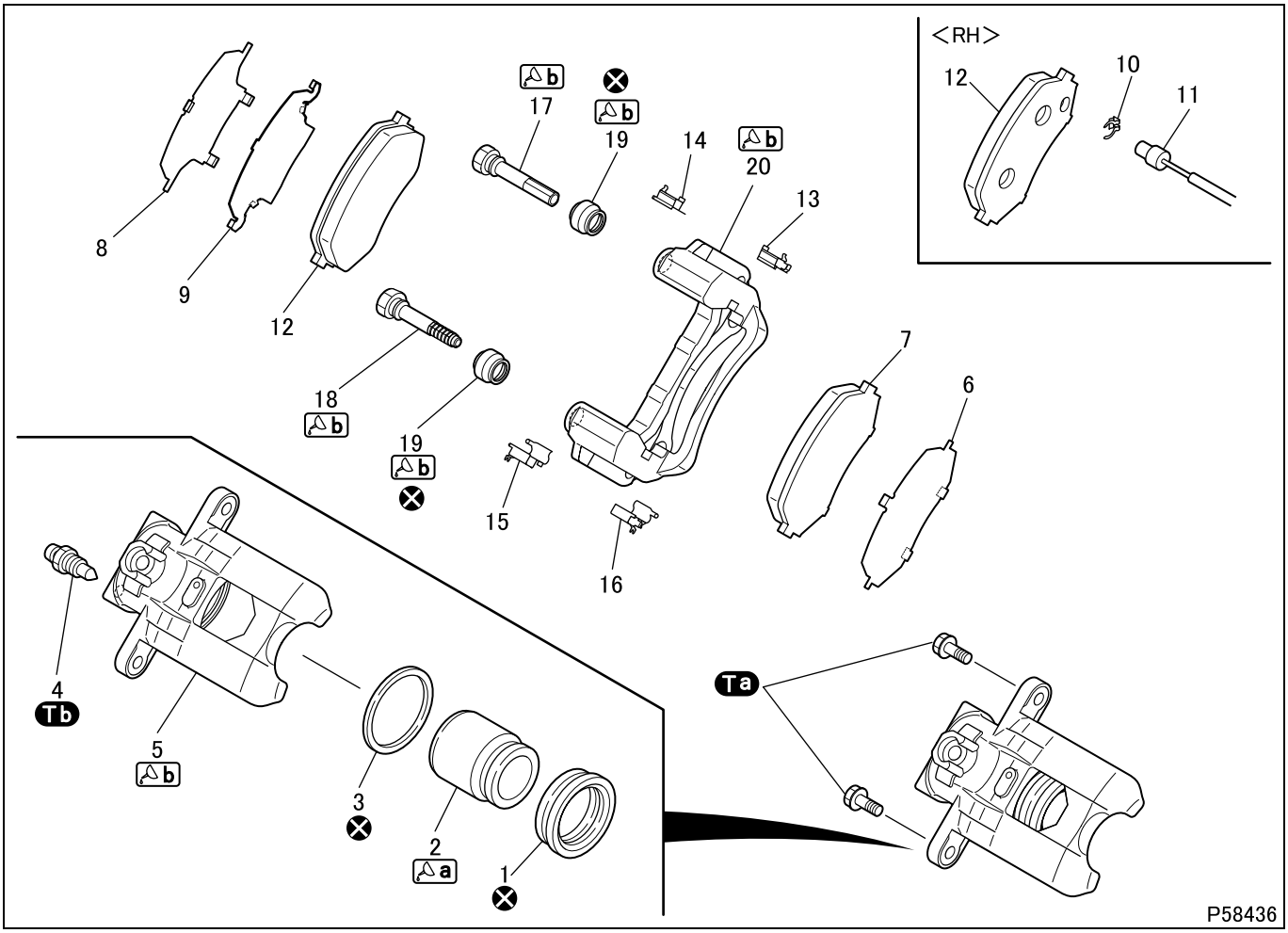

● **Disassembly sequence**

1 Piston boots
2 Piston
3 Piston seal
4 Air bleeder (front)
5 Caliper
6 Outer shim
7 Outer pad
8 Inner shim A
9 Inner shim B
10 Clip (rear RH only)
11 Pad wear indicator (rear RH only)
12 Inner pad
13 Pad liner A
14 Pad liner B
15 Pad liner C
16 Pad liner D
17 Main slide pin
18 Sub slide pin
19 Pin boots
20 Torque member

⊗: Non-reusable parts

NOTE

- **For removal and installation of the rear disc brake, see Gr27.**

● **Assembly sequence**

Follow the disassembly sequence in reverse.

Repair kit: Pad kit, Seal kit, Pad wear indicator kit, Sub pin kit

CAUTION ⚠

- **Rubber parts that are disassembled must be replaced as a seal kit.**
- **Items included in a seal kit must be lubricated with grease supplied with the kit before installation.**
- **Do not smear the surface of the outer or inner pad with lubricant. Otherwise, braking performance will be reduced.**
- **Measure disc brake drag torque after installing the disc brake. (See ON-VEHICLE INSPECTION AND ADJUSTMENT.)**

Service standards (Unit: mm {in.})

Location	Maintenance item	Standard value	Limit	Remedy
7, 12	Thickness of outer/inner pad	14 {0.55}	4 {0.16}	Replace

Tightening torque (Unit: N·m {ft.lbs, kgf·m})

Mark	Parts to be tightened	Tightening torque	Remarks
Ta	Pin bolt	40 to 50 {30 to 37, 4.1 to 5.1}	–
Tb	Air bleeder	5.8 to 8.8 {4.3 to 6.5, 0.6 to 0.9}	–

Lubricant and/or sealant

Mark	Points of application	Specified lubricant and/or sealant	Quantity
a	Outer periphery of piston	Brake fluid (SAE J1703 or FMVSS No. 116 DOT3)	As required
b	Inner periphery of caliper cylinder lips	Rubber grease	As required
	Outer periphery of main and sub slide pins		
	Pin boots mating surfaces with slide pins		
	Torque member grooves and guide holes for pin boots		

◆Installation procedure◆

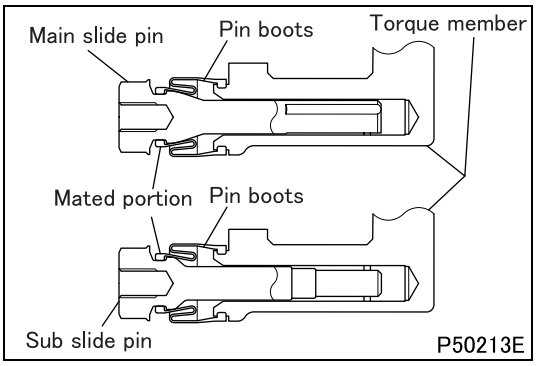

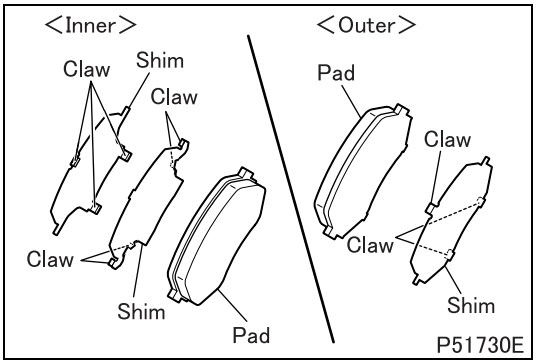

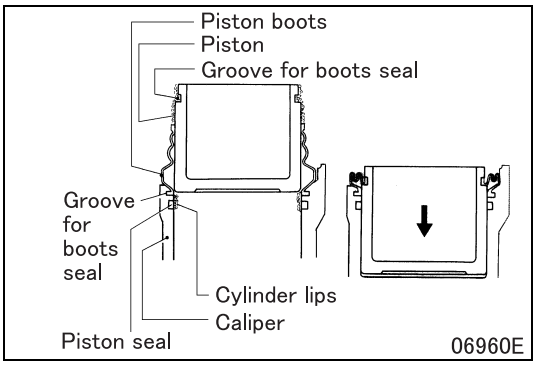

■ Installation: Main slide pin, sub slide pin, pin boots, and torque member

- On the torque member, apply grease onto the grooves and guide holes for the pin boots.
- Apply grease onto the outer peripheries of the main and sub slide pins. Apply grease onto the surfaces of the pin boots that are to be mated with the slide pins. Then, assemble these onto the torque member.
- Ensure that the seals on the pin boots are correctly attached onto the mated pin-boots portions.

■ Installation: Shims

- Position shims such that they face the illustrated directions before installing them onto the pads.

■ Installation: Piston boots, piston, and piston seal

- Apply brake fluid onto the outer periphery of the piston. Then, insert the piston boots over the piston.
- On the piston seal, spread the grease, already applied on it, evenly over the seal. Then, install the seal into the groove on the caliper.
- Apply grease evenly along the inner periphery of the cylinder lips on the caliper.
- Install the caliper-end seal of the piston boots into the groove on the caliper.
- Press fit the piston further into the boots. Ensure that the piston-end seal of the piston boots is engaged in the groove on the piston.

REAR DRUM BRAKE

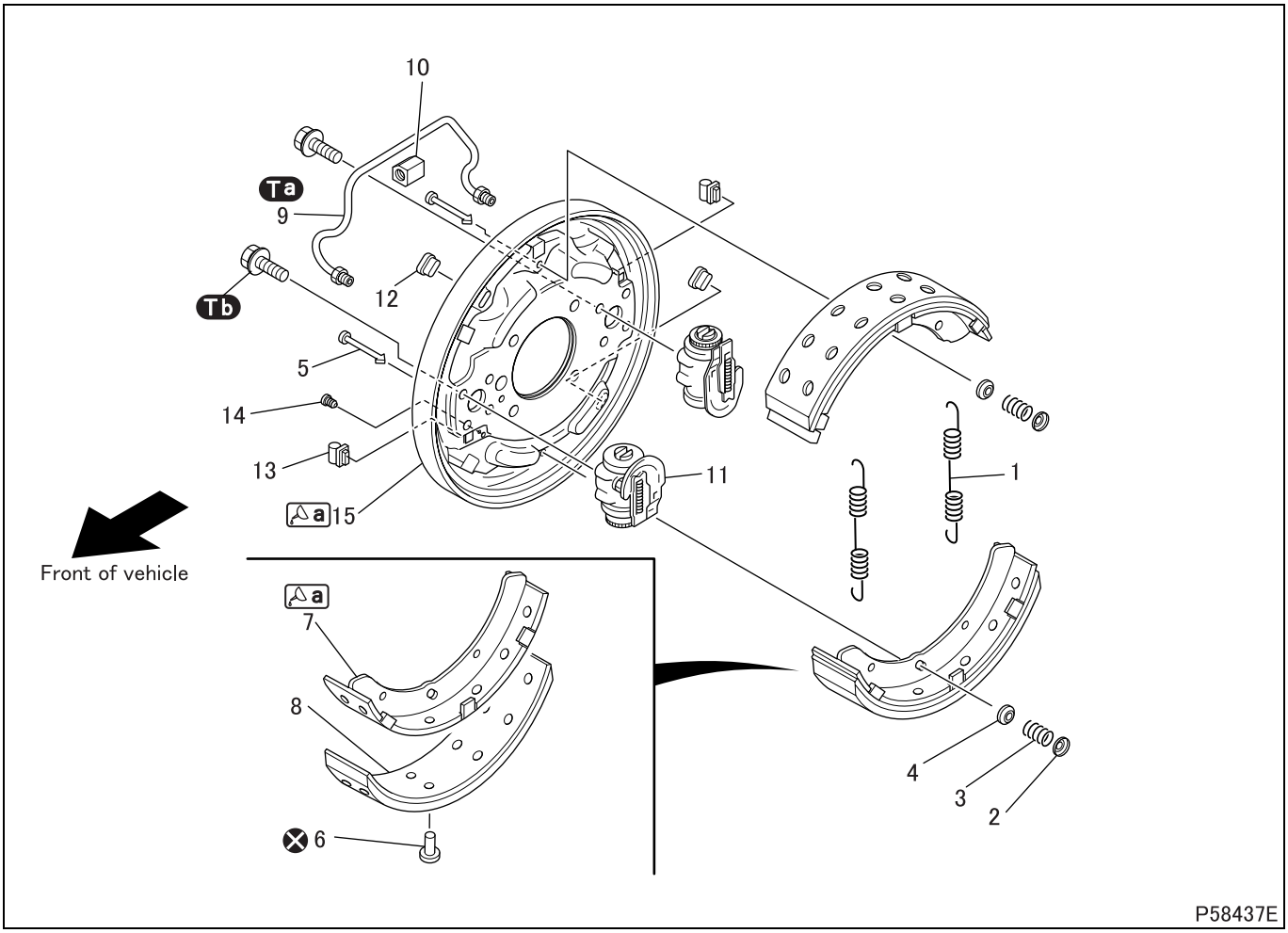

● **Disassembly sequence**

1 Return spring
2 Shoe hold-down cup
3 Shoe hold-down spring
4 Shoe hold-down cup
5 Shoe hold-down pin
6 Rivet
7 Brake shoe
8 Brake lining
9 Brake pipe
10 Spacer
11 Wheel cylinder (See later section.)
12 Cover
13 Cover
14 Cover
15 Backing plate

⊗: Non-reusable parts

CAUTION ⚠

- **For removal and installation of the rear drum brake, see Gr27.**

● **Assembly sequence**

Follow the disassembly sequence in reverse.

CAUTION ⚠

- **Do not smear the surface of the brake lining with lubricant. Otherwise, braking performance will be reduced.**
- **When replacing the brake lining, clean the threaded portions of the wheel cylinder adjuster and adjust screw and coat them with rubber grease.**
- **Adjust clearance between brake drum and shoe after installing the drum brake. (See ON-VEHICLE INSPECTION AND ADJUSTMENT.)**

Service standards (Unit: mm {in.})

Location	Maintenance item	Standard value	Limit	Remedy
1	Return spring load (installed length 190 {7.48})	195 to 235 N {44 to 53 lbs, 19.8 to 24.2 kgf}	175 N {39 lbs, 18.0 kgf}	Replace
8	Brake lining thickness	8.8 {0.35}	4.0 {0.16}	Replace

Tightening torque (Unit: N·m {ft.lbs, kgf·m})

Mark	Parts to be tightened	Tightening torque	Remarks
Ta	Brake pipe	13 to 15 {9.6 to 11, 1.3 to 1.5}	–
Tb	Bolt (wheel cylinder mounting)	37 to 49 {27 to 36, 3.8 to 5.0}	–

Lubricant and/or sealant

Mark	Points of application	Specified lubricant and/or sealant	Quantity
a	Contact areas between brake shoe and wheel cylinder	Brake grease	As required
	Contact areas between backing plate and brake shoe		

◆Removal procedure◆

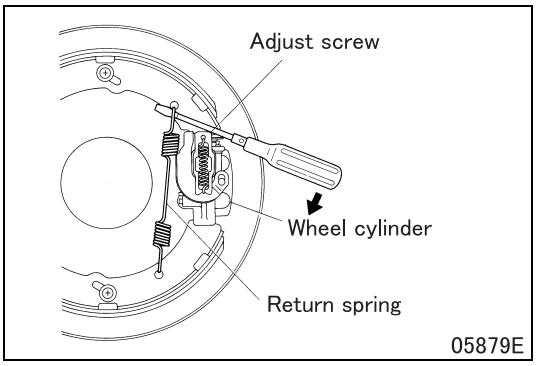

■ Removal: Return spring

- Using a flat-head screwdriver, remove the return spring. To do this, rest the screwdriver on the wheel cylinder adjust screw. Then, with the adjust screw as a fulcrum, engage the screwdriver with the spring hook and pry away the spring.

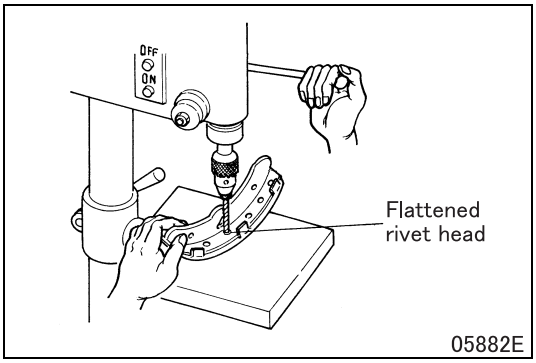

■ Removal: Brake lining

- Using a drilling machine, break the flattened rivet heads on the brake shoe side to release the brake lining.

◆Inspection procedure◆

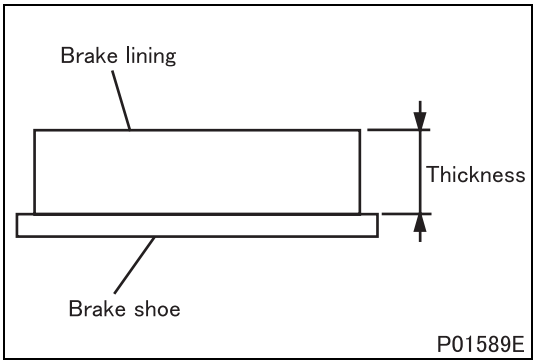

■ Inspection: Brake shoe

- Measure the thickness of the brake lining. If the measured value is less than the limit, replace all of the brake linings on the same axle.

CAUTION ⚠

- **Brake linings used on the same axle should be in the same size and have the same identification mark. Otherwise, braking performance can be different from left to right.**

◆Installation procedure◆

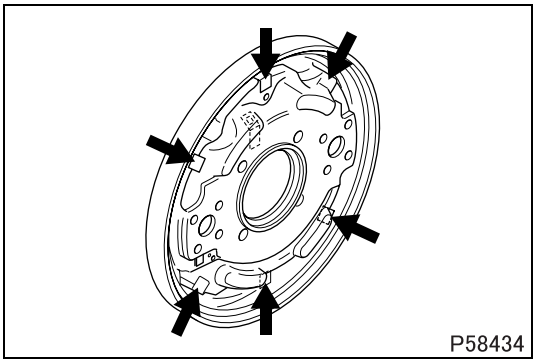

■ **Installation: Backing plate**

- Grease the backing plate at the illustrated locations.

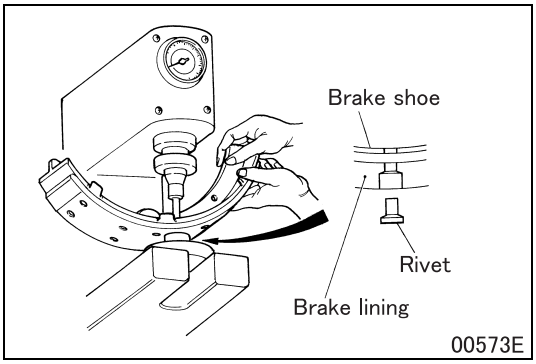

■ **Installation: Brake lining**

- Using cleaning fluid, clean the surface of the brake shoe to which the brake lining is to be mounted. Dry the brake shoe.
- Insert rivets from the lining to the shoe. Stake them, starting from the center of the shoe and moving towards the ends. Ensure that the shoe-to-lining clearances conform to the following specifications.
  - Around the rivets: 0.05 mm {0.0020 in.} or less
  - Along the shoe/lining sides: 0.4 mm {0.016 in.} or less
  - Along the shoe/lining ends: 0.5 mm {0.020 in.} or less
- Stake the rivets with a force of 21 ± 1.0 kN {4720 ± 225 lbs, 2100 ± 100 kgf}.

CAUTION ⚠

- **Replace all of the brake linings on the same axle and the brake linings should be in the same size and have the same identification mark. Otherwise, braking performance can be different from left to right.**

- After assembly, check the drum-to-lining contact. Correct as required.

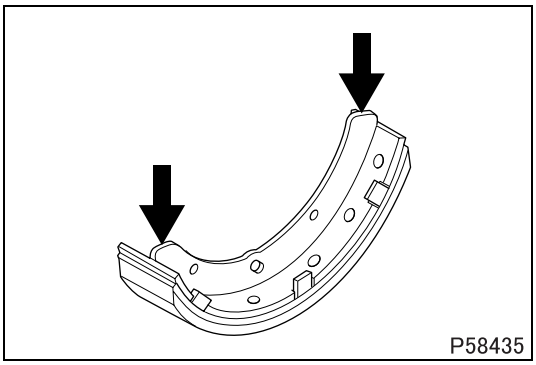

■ **Installation: Brake shoe**

- Grease the brake shoe at the illustrated locations.

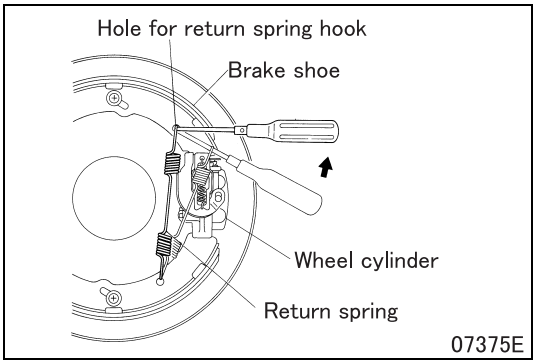

■ **Installation: Return spring**

- Hook the end of the return spring that has a smaller number of coils onto the brake shoe on the adjust screw side of the wheel cylinder.
- Engage a small Phillips screwdriver into the return spring hook. Then, using the screwdriver insert the spring hook into the hook hole in the brake shoe and attach the hook onto the shoe.

Wheel Cylinder

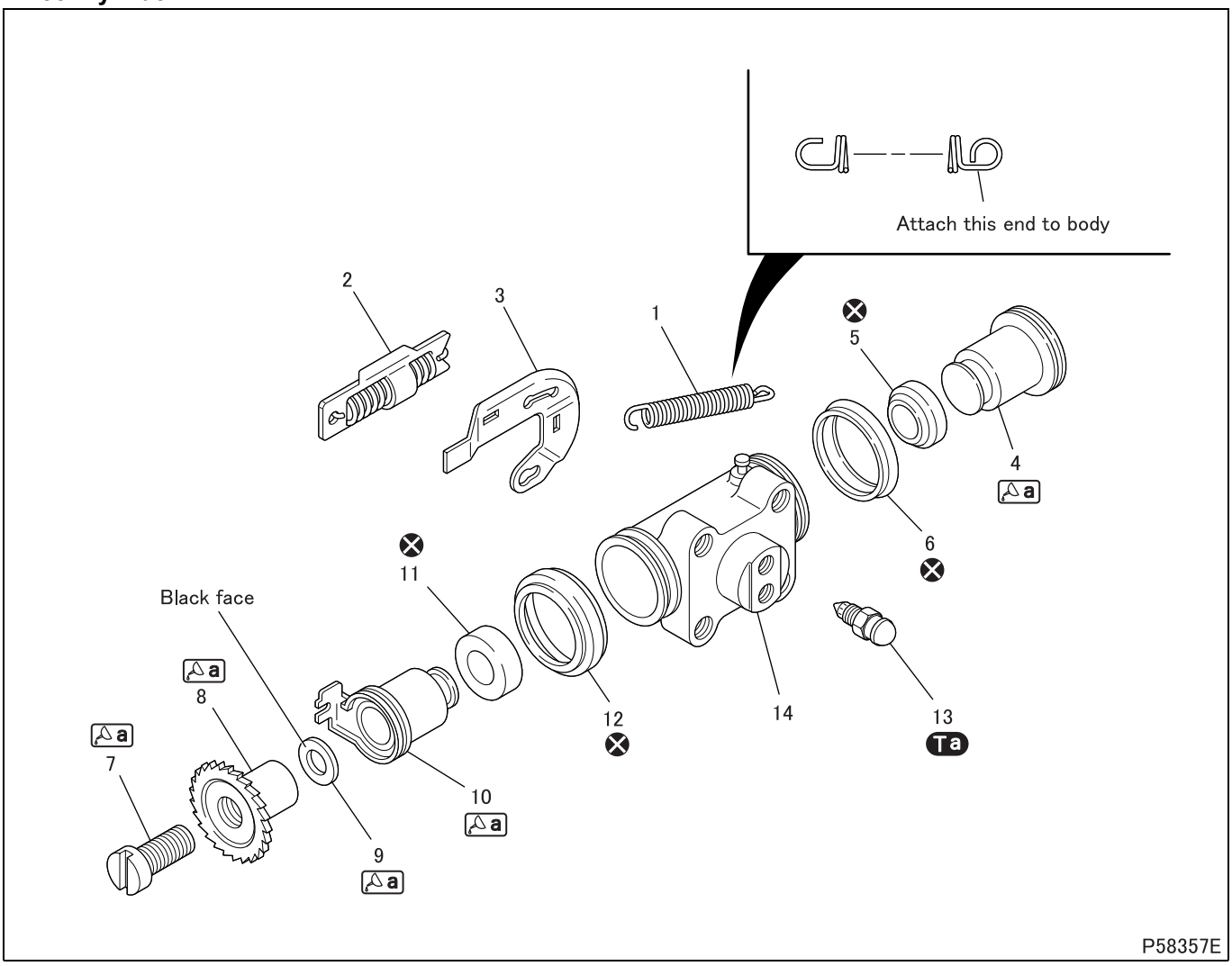

● **Disassembly sequence**

1 Spring
2 Spring & fitting
3 Lever
4 Piston
5 Piston cup
6 Boots
7 Adjust screw
8 Adjuster
9 Washer
10 Piston
11 Piston cup
12 Boots
13 Air bleeder
14 Body

⊗: Non-reusable parts

● **Assembly sequence**

Follow the disassembly sequence in reverse.

Repair kit: Wheel cylinder kit

Service standards (Unit: mm {in.})

Location	Maintenance item	Standard value	Limit	Remedy
4, 10, 14	Piston-to-body clearance	0.02 to 0.08 {0.00079 to 0.031}	0.2 {0.0079}	Replace

Tightening torque (Unit: N·m {ft.lbs, kgf·m})

Mark	Parts to be tightened	Tightening torque	Remarks
Ta	Air bleeder	6.9 to 8.8 {5.1 to 6.5, 0.7 to 0.9}	–

Lubricant and/or sealant

Mark	Points of application	Specified lubricant and/or sealant	Quantity
a	Sliding face of piston	Rubber grease	As required
	Threaded portion of adjust screw		
	Sliding face of adjuster		
	Both sides of washer		

Exhaust Brake Unit

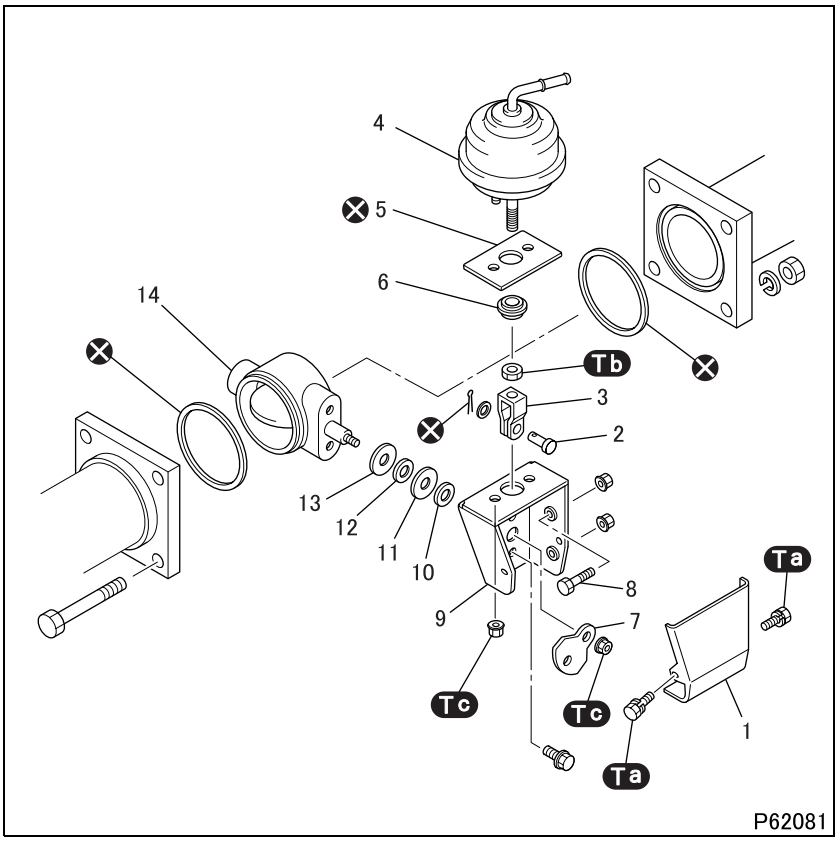

● **Disassembly sequence**

1 Cover
2 Clevis pin
3 Clevis
4 Power chamber
5 Gasket
6 Bearing
7 Lever
8 Adjust bolt
9 Bracket
10 Seal ring A
11 Seal ring B
12 Seal ring A
13 Seal ring B
14 Valve

⊗: Non-reusable parts

CAUTION ⚠

- **Do not attempt to disassemble the power chamber.**

NOTE

- **For removal and installation procedures of the exhaust brake unit, see Gr15.**

● **Assembly sequence**

Follow the disassembly sequence in reverse.

Service standards (Unit: mm {in.})

Location	Maintenance item	Standard value	Limit	Remedy
–	Average of top and bottom clearances between butterfly valve and body with valve fully closed (with power chamber vacuum of 87 to 93 kPa {25.7 to 27.5 in.Hg, 650 to 700 mmHg} or above)	0.10 to 0.25 {0.0039 to 0.0098}	–	Adjust
4	Air-tightness of power chamber (at 15 sec. after vacuum of 67 kPa {19.8 in.Hg, 500 mmHg} is achieved in chamber)	63 kPa {18.6 in.Hg, 475 mmHg} or above	–	Replace

Tightening torque (Unit: N·m {ft.lbs, kgf·m})

Mark	Parts to be tightened	Tightening torque	Remarks
Ta	Bolt (cover mounting)	4.9 to 6.9 {3.6 to 5.1, 0.5 to 0.7}	–
Tb	Lock nut (clevis retention)	9.8 to 16 {7.2 to 12, 1.0 to 1.6}	–
Tc	Nut (power chamber mounting)	11 to 17 {8.0 to 12, 1.10 to 1.70}	–
	Nut (lever mounting)		

◆Inspection procedure◆

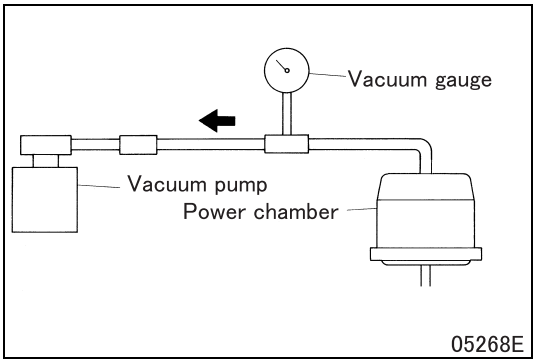

■ **Inspection: Power chamber air-tightness**

- Connect the components with piping as illustrated. When a vacuum of 67 kPa {19.8 in.Hg, 500 mmHg} or above is applied to the power chamber, stop the vacuum pump.
- Fifteen seconds later, the reading on the vacuum gauge should conform to the standard value.
- If not, replace the power chamber.

◆Adjustment after installation◆

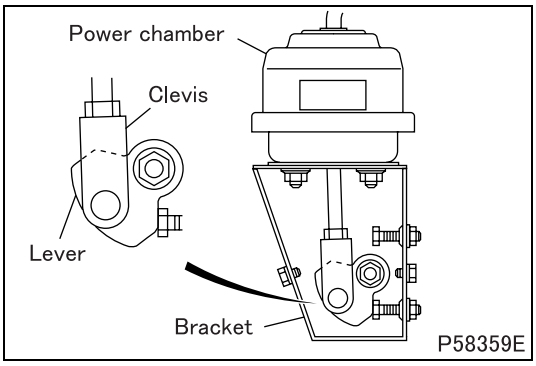

■ **Adjustment: Clevis**

- Assemble the power chamber onto the bracket. Then, adjust the location of the clevis such that the hole in the clevis is aligned by half with the hole in the lever.

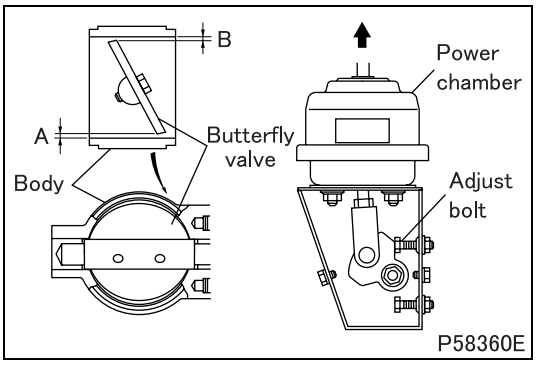

■ **Adjustment: Butterfly valve**

(1) Butterfly valve fully-closed position

- Apply a vacuum of 87 to 93 kPa {25.7 to 27.5 in.Hg, 650 to 700 mmHg} to the power chamber to fully close the butterfly valve. With the valve fully closed, measure the top and bottom clearances B and A between the valve and the body, and obtain the average of the two. The average value should conform to the standard value. Adjust with the adjust bolt as required.

$$\text{Average clearance} = \frac{(A + B)}{2}$$

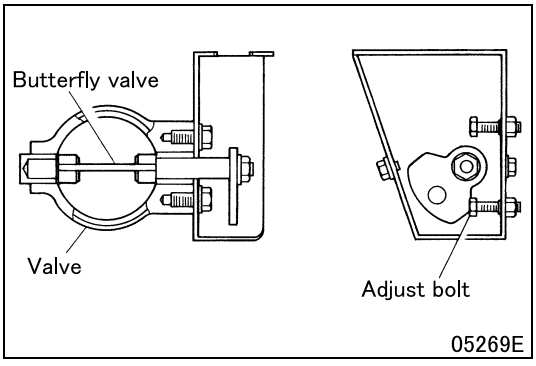

(2) Valve fully-open position

- Adjust the butterfly valve to the full open position using the adjust bolt.

Group 35E

Anti-lock Brake System (ABS)

Table of Contents

Back

Home

MITSUBISHI FUSO TRUCK OF AMERICA, Inc.

Pub.No.TWSE0805-35E

INDEX

SPECIFICATIONS 35E-2

STRUCTURE AND OPERATION

1. **Overview 35E-4**
2. **Electronic Control System 35E-14**
3. **Electronic Control Unit Schematic Diagram 35E-18**

TROUBLESHOOTING

1. **Diagnosis Procedure 35E-20**
2. **Diagnostic Precautions 35E-20**
3. **Diagnosis Based on Diagnosis Codes 35E-21**
4. **Multi-Use Tester Service Data 35E-27**
5. **Actuator Test Using Multi-Use Tester 35E-29**
6. **Inspection at Hydraulic Unit (Electronic Control Unit) Connector 35E-30**

ON-VEHICLE INSPECTION AND ADJUSTMENT

1. **Functional Check 35E-32**
2. **Inspection of Hydraulic Unit (Electronic Control Unit) Operation 35E-33**
3. **Inspection after Replacing or Removing/Installing Hydraulic Unit (Electronic Control Unit) 35E-34**
4. **Oscilloscopic Inspection through Wheel Speed Sensor Signal Waveform 35E-35**

HYDRAULIC UNIT CONNECTOR COUPLING AND UNCOUPLING 35E-36

INSPECTION OF ELECTRICAL COMPONENTS 35E-38

COMPONENTS LOCATION 35E-40

ELECTRICAL WIRING DIAGRAM 35E-42

SPECIFICATIONS

Item			Specifications
Hydraulic unit (electronic control unit)	Manufacturer		ADVICS
	Rated voltage	V	DC12
	Working voltage range	V	DC10 to 18
*Wheel speed sensor	Manufacturer		SUMITOMO ELECTRIC or Bosch
G sensor	Manufacturer		MITSUBISHI ELECTRIC
	Rated voltage	V	DC12
	Working voltage range	V	DC8 to 16

*Manufacturers of wheel speed sensor differ depending on the model of the brakes.

M E M O

1. Overview

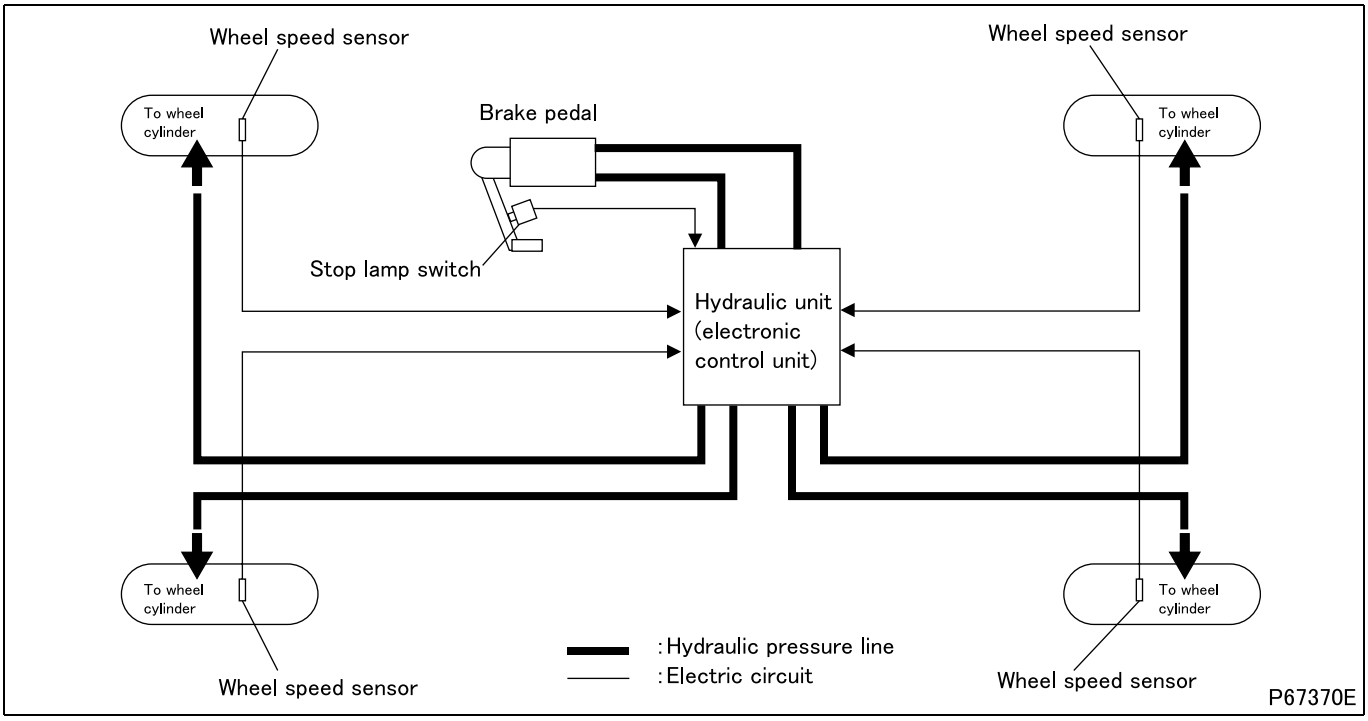

- The anti-lock brake system (ABS) prevents wheel lock-up and resultant skid when braking hard or on slippery roads, thus maintain vehicle stability and steerability.

1.1 Outline of anti-lock brake system

- Wheels will roll along on the road in the direction of their rotation. Therefore, the driver can steer the vehicle as he/she wishes by maneuvering the steering wheel.
  However, on vehicles not equipped with ABS, applying the brakes hard can cause wheel lock-up. Once tires are locked up, they are simply a piece of rubber in contact with the road surface and steering control will be lost. The vehicle will skid in the direction of inertia irrespective of the steering angle.
  In other words, vehicle stability and steerability are lost and the vehicle is beyond the driver's control.
- On vehicles equipped with anti-lock brake system, the system prevents wheel lock-up by reducing the braking power to the wheel that is about to lock up and, thereby, maintain vehicle stability and steerability.

(1) Wheel lock-up when cornering on slippery road

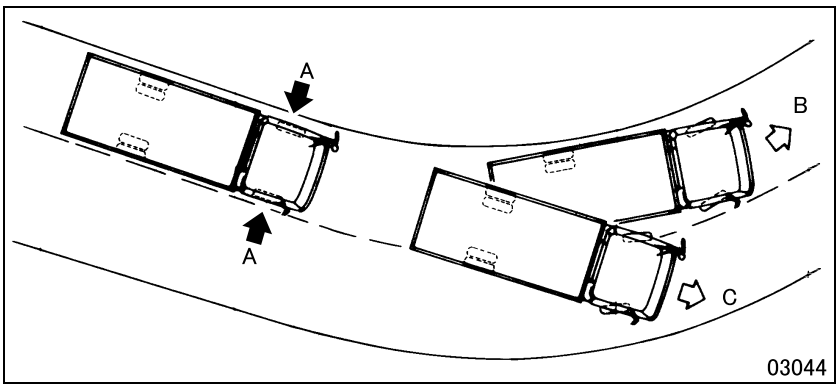

- If wheel lock-up occurs during braking on a slippery curve, steering control will be lost. If this happens, the vehicle may deviate, while skidding, from the intended course no matter how the driver maneuvers the steering wheel.
  A: Application of brakes (wheel lock-up)
  B: Intended course
  C: Go out of course

(2) Wheel lock-up in trying to avoid obstacle ahead on slippery straight road

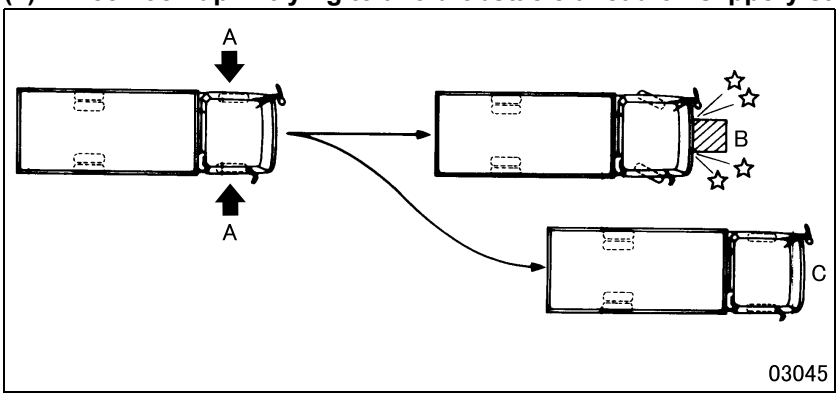

- If wheel lock-up occurs during hard braking on a slippery straight road in trying to avoid an obstacle ahead, steering control will be lost. If this happens, the vehicle will not be able to avoid the obstacle no matter how the driver maneuvers the steering wheel.
  A: Application of brakes (wheel lock-up)
  B: Obstacle
  C: Intended course

(3) Split μ (Wheel lock-up on asymmetrical road surface, with higher friction of coefficient on one side and lower friction of coefficient on the other side)

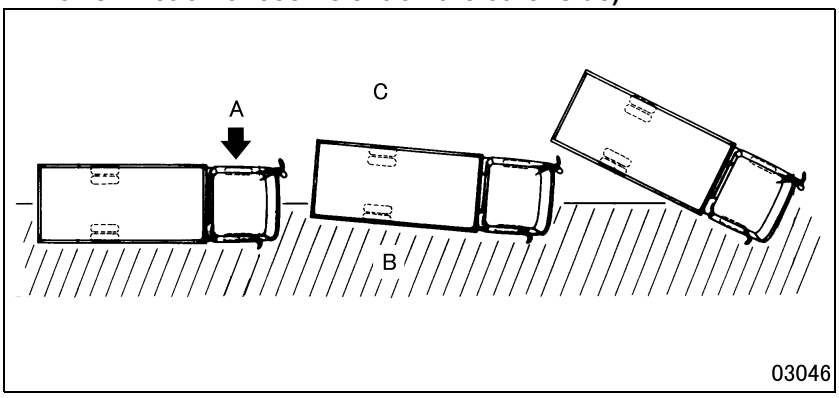

- If the front and rear wheels on one side of the vehicle are on the side of the road that has a lower friction of coefficient and therefore is more slippery than the other side of the road, these wheels are more likely to lock up and slip than the wheels on the other side of the vehicle. When the brakes are applied under such conditions, the braking efficiency will be different between the right and left sides of the vehicle and the vehicle will lose stability. Braking hard under such conditions can even cause the vehicle to spin.
  A: Application of brakes (wheel lock-up)
  B: Less slippery road surface
  C: More slippery road surface

- As mentioned above, the system prevents wheel lock-up by providing controlled braking force to each wheel. This prevents wheel slip and skid and ensures steering control and vehicle stability even during hard braking.

1.2 Anti-lock brake system control process

- Anti-lock brake system ensures controlled yet optimum braking in a given road surface condition by placing the braking force within a certain range of slip rate determined by the wheel speed - vehicle speed relation.
- Stepping on the brake pedal causes the wheel speed to slow down and, as a result, the vehicle also slows down. However, the vehicle will still try to move on due to the inertia that has built up. This causes a difference between the wheel speed and the vehicle speed, or, in other words, slip. The amount of slip can be expressed as slip rate, as follows.

$$\text{Slip rate (\%)} = \frac{\text{Vehicle speed} - \text{Wheel speed}}{\text{Vehicle speed}} \times 100$$

- A slip ratio of 0% means that there is no slip between the wheel and the road surface. A slip rate of 100% means that the wheel is locked up.

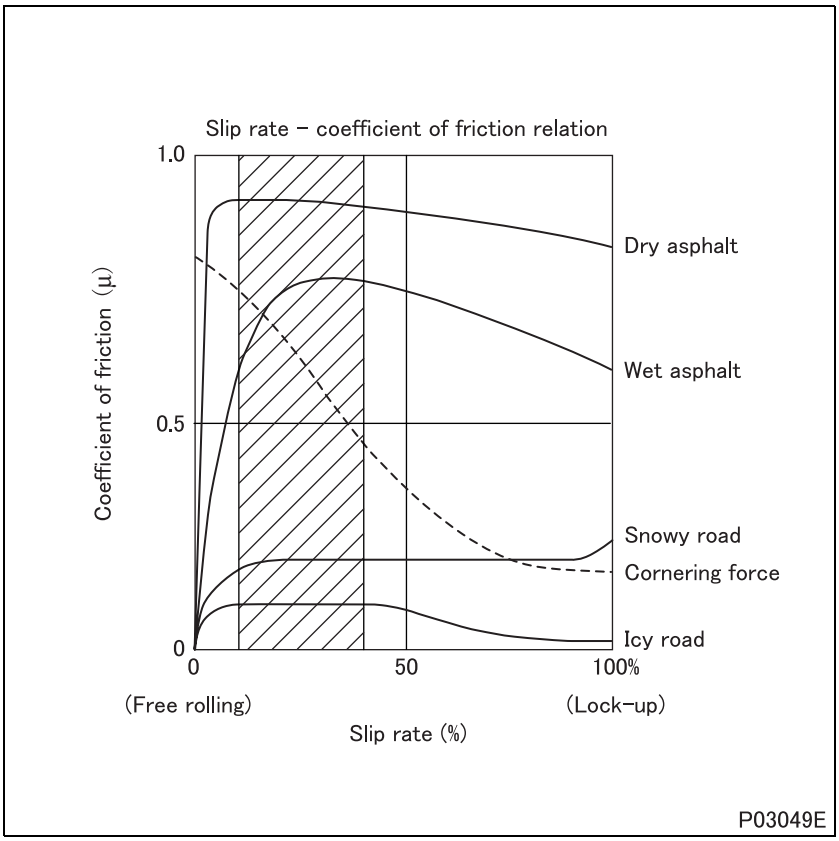

- The graph shows the variation in the tire's coefficient of friction from free rolling to lock-up. As the brake pedal is slowly pressed, the tires continue to rotate but start slipping.
- As the stepping force on the brake pedal increases, the tires will stop rotating and the vehicle will just skid. This is wheel lock-up.
- As the graph shows, the coefficient of friction peaks within the hatched area.
- In other words, the maximum coefficient of friction can be achieved, not by stepping on the brake pedal with full force, but by doing so moderately to try to place the slip rate within the hatched area.
- On vehicles equipped with anti-lock brake system, the hydraulic control unit (electronic control unit) controls the braking force so that it falls within the hatched area. This will ensure that the tires do not lock up but have the maximum coefficient of friction, thus achieving efficient braking performance.

(1) Anti-lock brake system control cycle

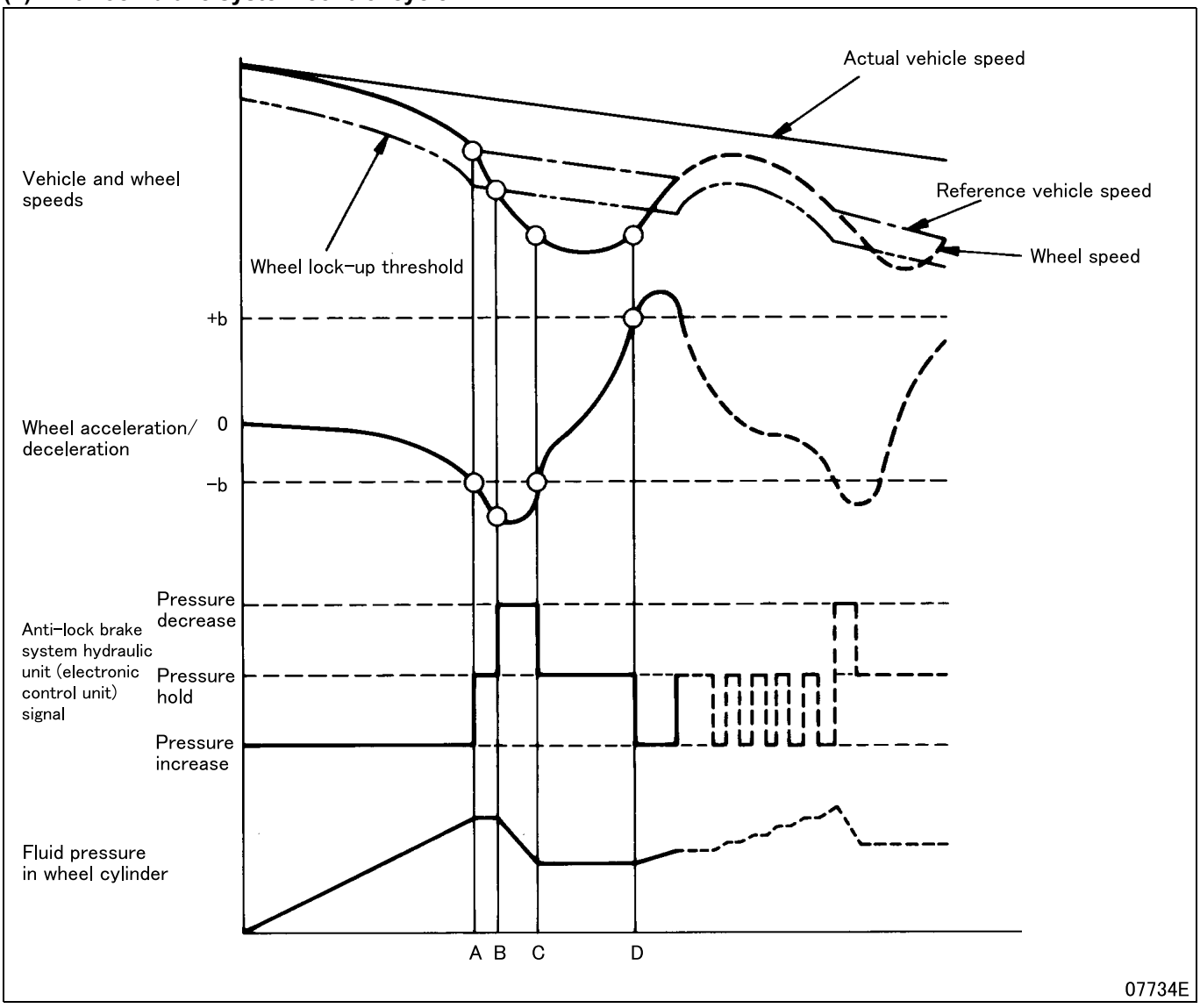

- The above chart shows the typical control cycle of anti-lock brake system following the application of brakes, detailing in time series the variation in wheel speed, wheel speed acceleration/deceleration and fluid pressure in the wheel cylinder.
- When the wheel speed acceleration/deceleration drops to the “–b” threshold at A, the hydraulic unit (electronic control unit) sends “pressure hold” signal to maintain the fluid pressure in the wheel cylinder.
  At the same time, the hydraulic unit (electronic control unit) calculates the reference vehicle speed.
- When the vehicle decelerates to the wheel lock-up threshold at B, the hydraulic unit (electronic control unit) interprets this as imminent wheel lock-up and sends “pressure decrease” signal to reduce the fluid pressure in the wheel cylinder.
- When the wheel speed picks up and exceeds the “–b” threshold at C, the hydraulic unit (electronic control unit) sends “pressure hold” signal to maintain the fluid pressure in the wheel cylinder at the current level.
- When the wheel speed exceeds the “+b” threshold at D, the hydraulic unit (electronic control unit) determines that the imminent wheel lock-up has gone and sends “pressure increase” signal to increase the fluid pressure in the wheel cylinder.
- The pressure hold-decrease-increase cycle is repeated to keep the slip rate at optimum levels to prevent wheel lock-up.

1.3 Hydraulic unit (electronic control unit)

(1) Schematic circuit diagram

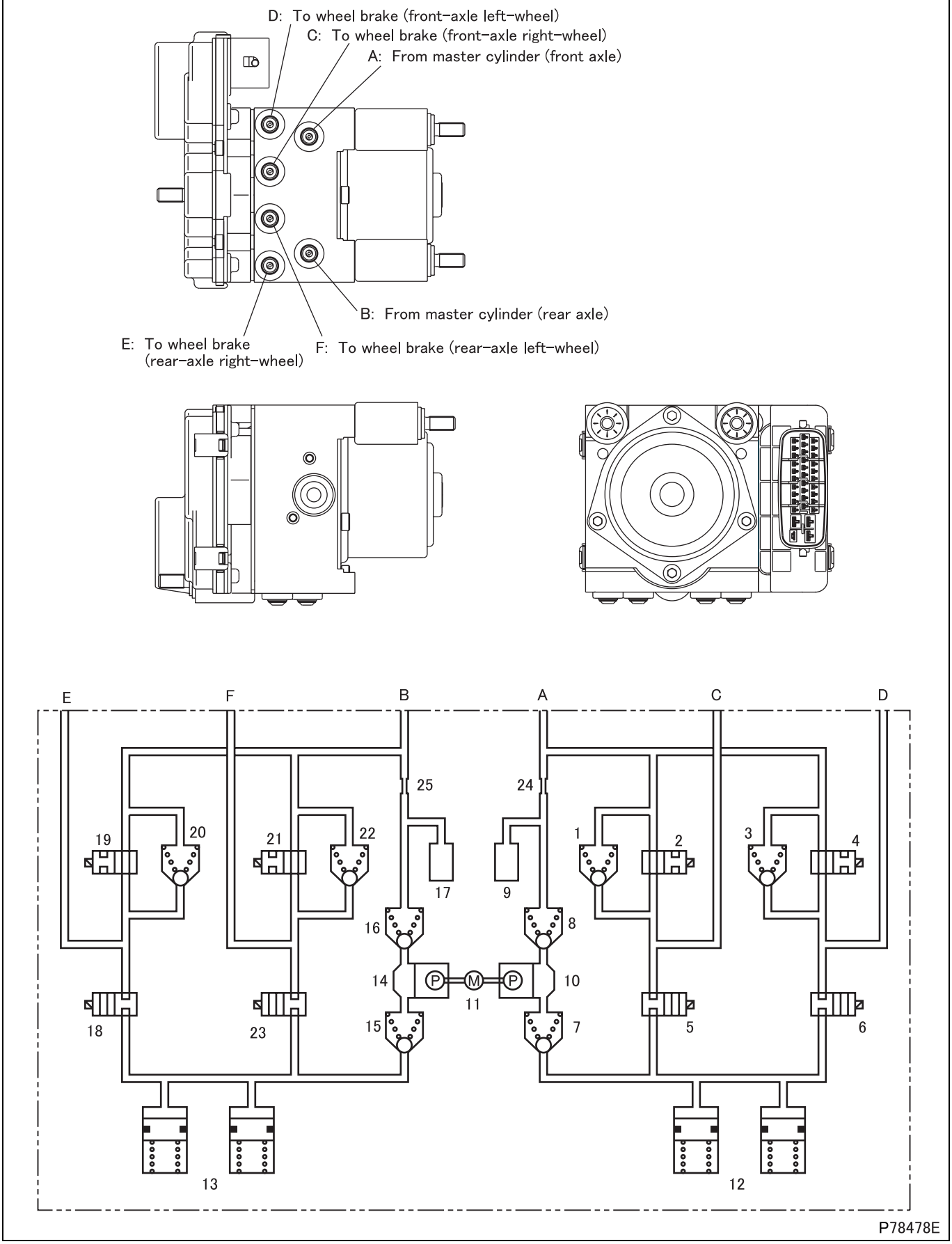

1 Check valve (front-axle right-wheel)
2 Magnetic valve (front-axle right-wheel HOLD)
3 Check valve (front-axle left-wheel)
4 Magnetic valve (front-axle left-wheel HOLD)
5 Magnetic valve (front-axle right-wheel DECREASE)
6 Magnetic valve (front-axle left-wheel DECREASE)
7 Inlet valve (front axle)
8 Outlet valve (front axle)
9 Damper (front axle)
10 Plunger pump (front axle)
11 Motor
12 Reservoir (front axle)
13 Reservoir (rear axle)
14 Plunger pump (rear axle)
15 Inlet valve (rear axle)
16 Outlet valve (rear axle)
17 Damper (rear axle)
18 Magnetic valve (rear-axle right-wheel DECREASE)
19 Magnetic valve (rear-axle left-wheel HOLD)
20 Check valve (rear-axle right-wheel)
21 Magnetic valve (rear-axle left-wheel HOLD)
22 Check valve (rear-axle left-wheel)
23 Magnetic valve (rear-axle left-wheel DECREASE)
24 Orifice (front axle)
25 Orifice (rear axle)

A: From master cylinder (front axle)
B: From master cylinder (rear axle)
C: To wheel brake (front-axle right-wheel)
D: To wheel brake (front-axle left-wheel)
E: To wheel brake (rear-axle right-wheel)
F: To wheel brake (rear-axle left-wheel)

- The hydraulic unit (electronic control unit) is the heart of anti-lock brake system control, energizing/de-energizing the magnetic valves and turning ON/OFF the motor. The table below shows how each magnetic valve and the motor are controlled in each phase.

		Anti-lock brake system control											
		Front-axle right-wheel			Front-axle left-wheel			Rear-axle right-wheel			Rear-axle left-wheel		
		DECREASE	HOLD	INCREASE	DECREASE	HOLD	INCREASE	DECREASE	HOLD	INCREASE	DECREASE	HOLD	INCREASE
Magnetic valve	Front-axle right-wheel DECREASE	O	×	×	–	–	–	–	–	–	–	–	–
	Front-axle right-wheel HOLD	O	O	×	–	–	–	–	–	–	–	–	–
	Front-axle left-wheel DECREASE	–	–	–	O	×	×	–	–	–	–	–	–
	Front-axle left-wheel HOLD	–	–	–	O	O	×	–	–	–	–	–	–
	Rear-axle right-wheel DECREASE	–	–	–	–	–	–	O	×	×	–	–	–
	Rear-axle right-wheel HOLD	–	–	–	–	–	–	O	O	×	–	–	–
	Rear-axle left-wheel DECREASE	–	–	–	–	–	–	–	–	–	O	×	×
	Rear-axle left-wheel HOLD	–	–	–	–	–	–	–	–	–	O	O	×
Motor		O											

O: On
×: OFF

(2) Normal braking (anti-lock brake system not in operation)

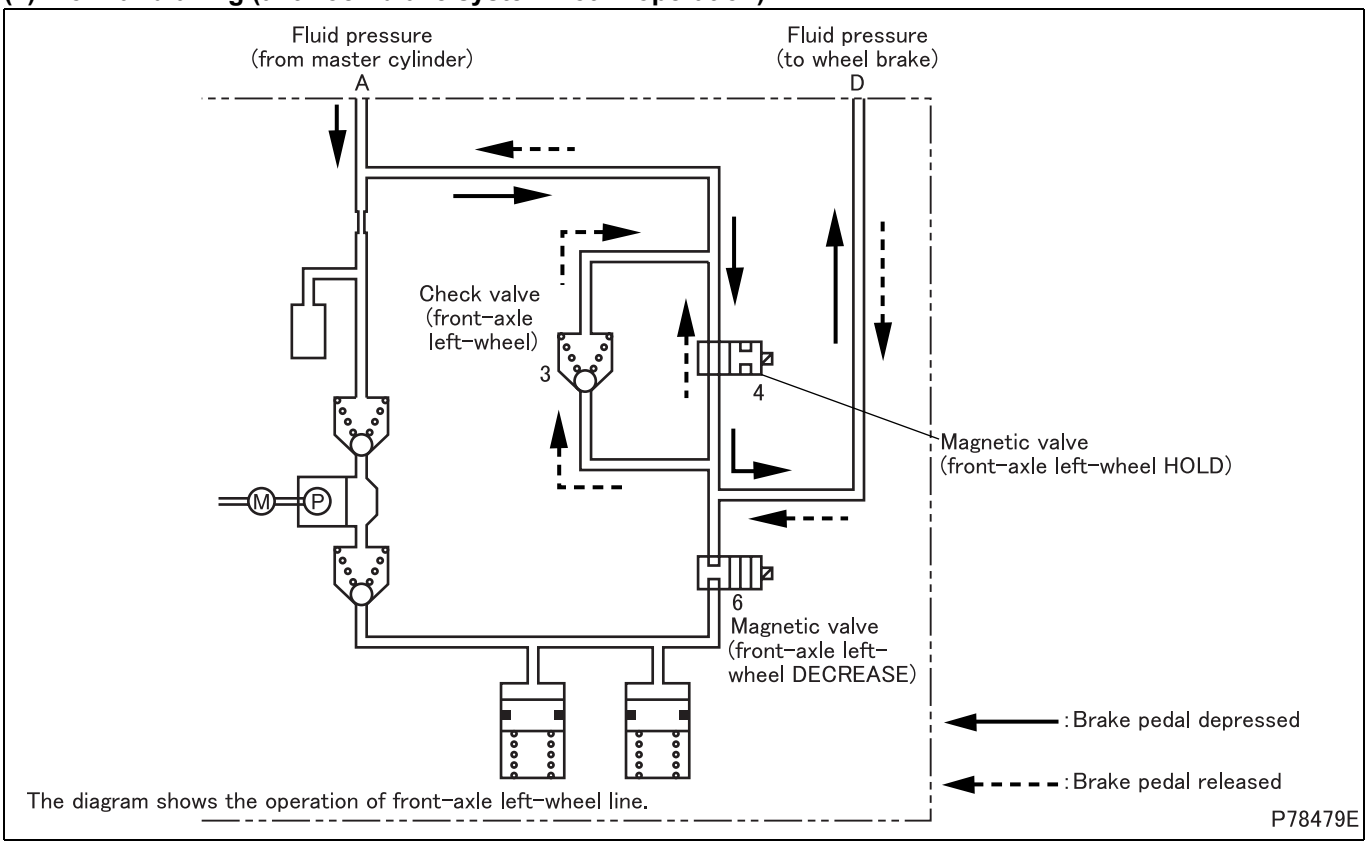

- When the brake pedal is pressed and there is no imminent wheel lock-up, the hydraulic unit (electronic control unit) will not send any control signal to the magnetic valve (front-axle left-wheel DECREASE) or to the magnetic valve (front-axle left-wheel HOLD). The former valve remains closed while the latter valve stays open.
- Pressure fluid A from the brake master cylinder flows past the magnetic valve (front-axle left-wheel HOLD) and to the wheel brake D.
- When the brake pedal is released, pressure fluid A from the brake master cylinder drops. Pressure fluid from the wheel brake D now flows past the magnetic valve (front-axle left-wheel HOLD) and the check valve (front-axle left-wheel) and returns to the brake master cylinder.

(3) Anti-lock braking (pressure decrease)

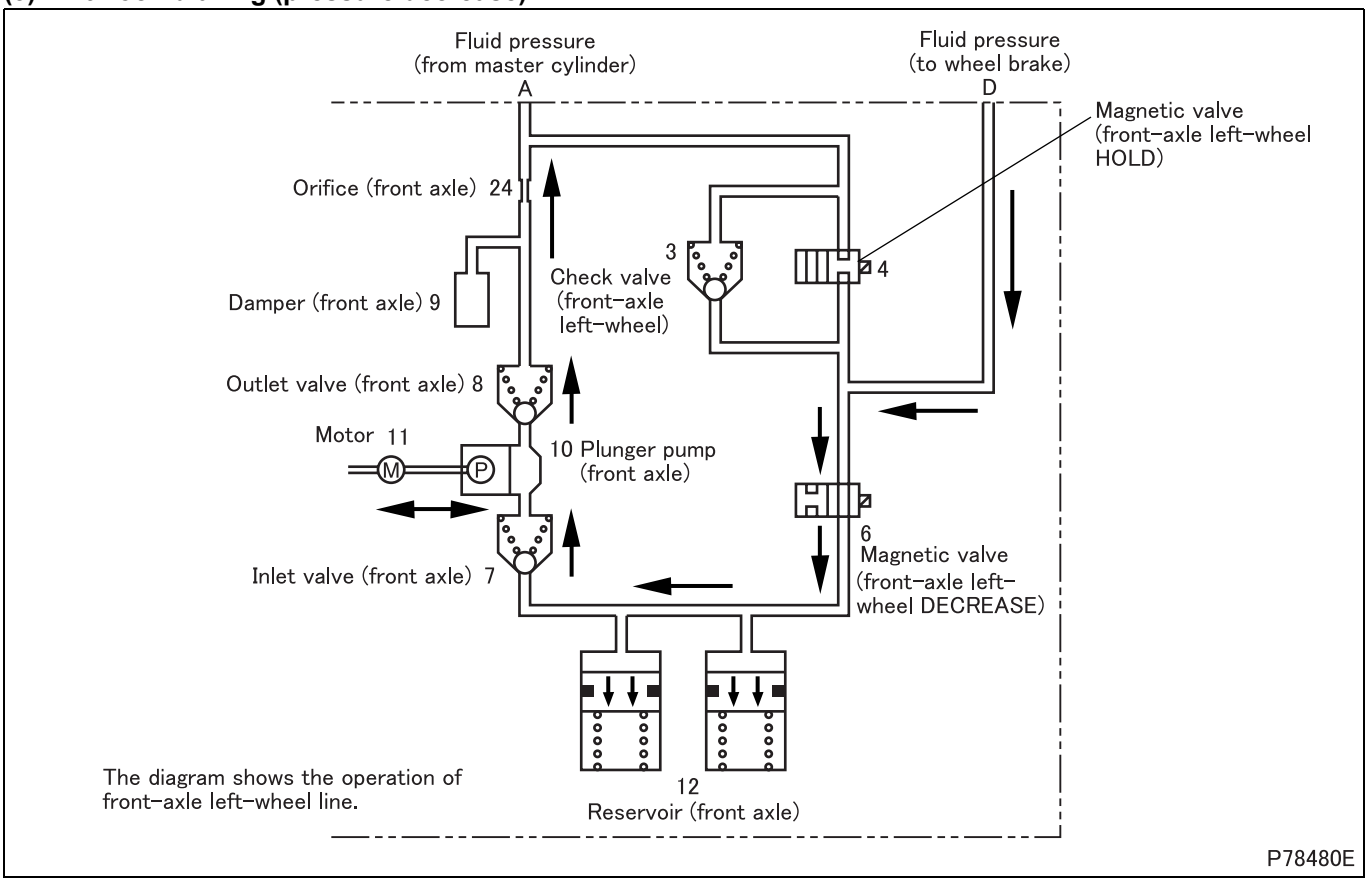

- When the brake pedal is pressed and there is imminent wheel lock-up, the hydraulic unit (electronic control unit) sends control signal to the magnetic valve (front-axle left-wheel DECREASE) and the magnetic valve (front-axle left-wheel HOLD). The former valve will open while the latter valve will close.
- Pressure fluid form the wheel brake D now flows past the magnetic valve (front-axle left-wheel DECREASE) and to the reservoirs. The line pressure will drop.
- When the hydraulic unit (electronic control unit) sends control signal to the magnetic valve (front-axle left-wheel DECREASE) and the magnetic valve (front-axle left-wheel HOLD), it also sends control signal to the motor at the same time, causing the plunger pump (front axle) to start pumping. Pressure fluid in the reservoirs now flows past the inlet valve (front axle), the outlet valve (front axle), the damper (front axle) and the orifice (front axle) and returns to the master cylinder.
- During this process, the check valve (front-axle left-wheel) remains closed by the fluid pressure A from the brake master cylinder. As a result, no pressure fluid from the master cylinder flows to the wheel brake.

(4) Anti-lock braking (pressure hold)

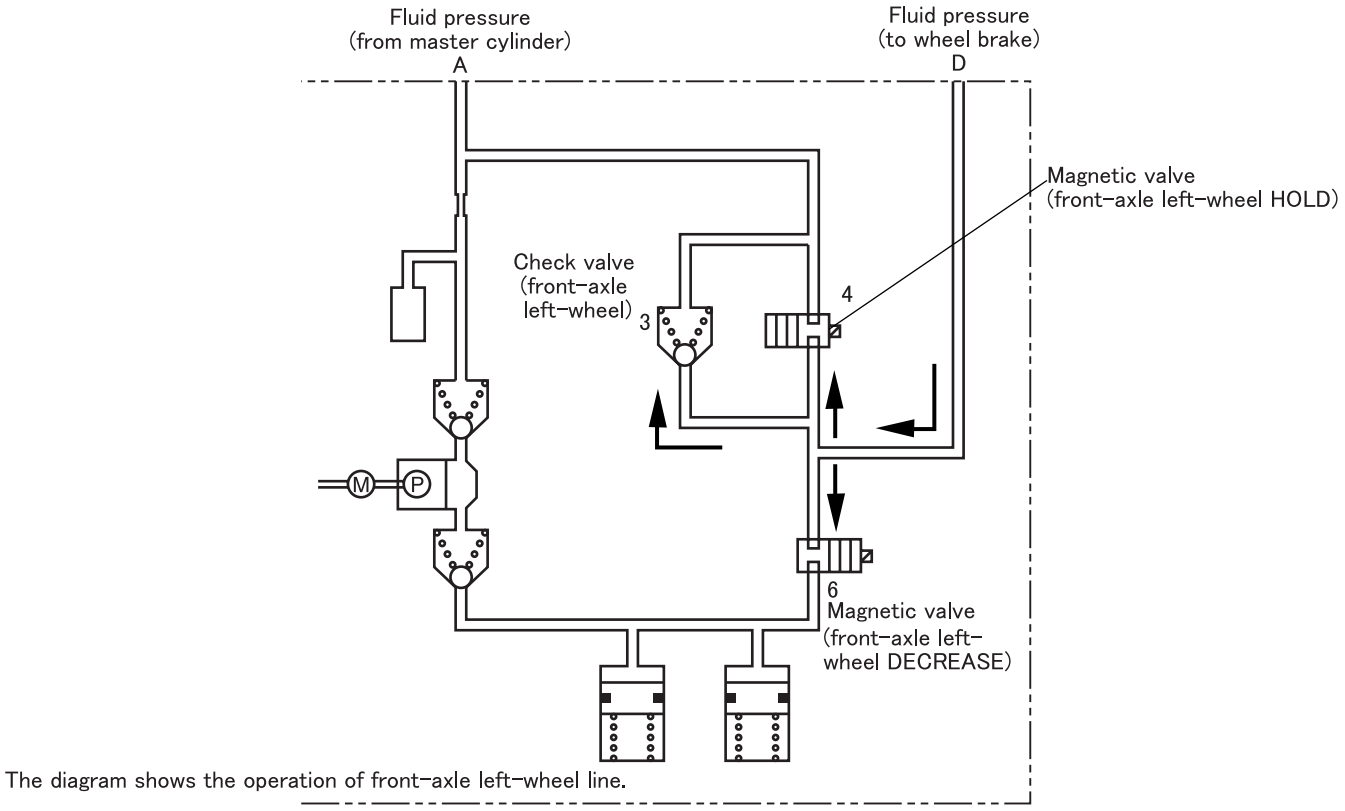

- When it becomes necessary to hold the fluid pressure D in the wheel brake at the same level as part of anti-lock brake system control, the hydraulic unit (electronic control unit) sends “HOLD” signal to the magnetic valve (front-axle left-wheel HOLD). As a result, both of the magnetic valve (front-axle left-wheel HOLD) and the magnetic valve (front-axle left-wheel DECREASE) will be closed, which holds the fluid pressure in the wheel brake at the current level.
- The check valve (front-axle left-wheel) remains closed by the fluid pressure A from the brake master cylinder.

(5) Anti-lock braking (pressure increase)

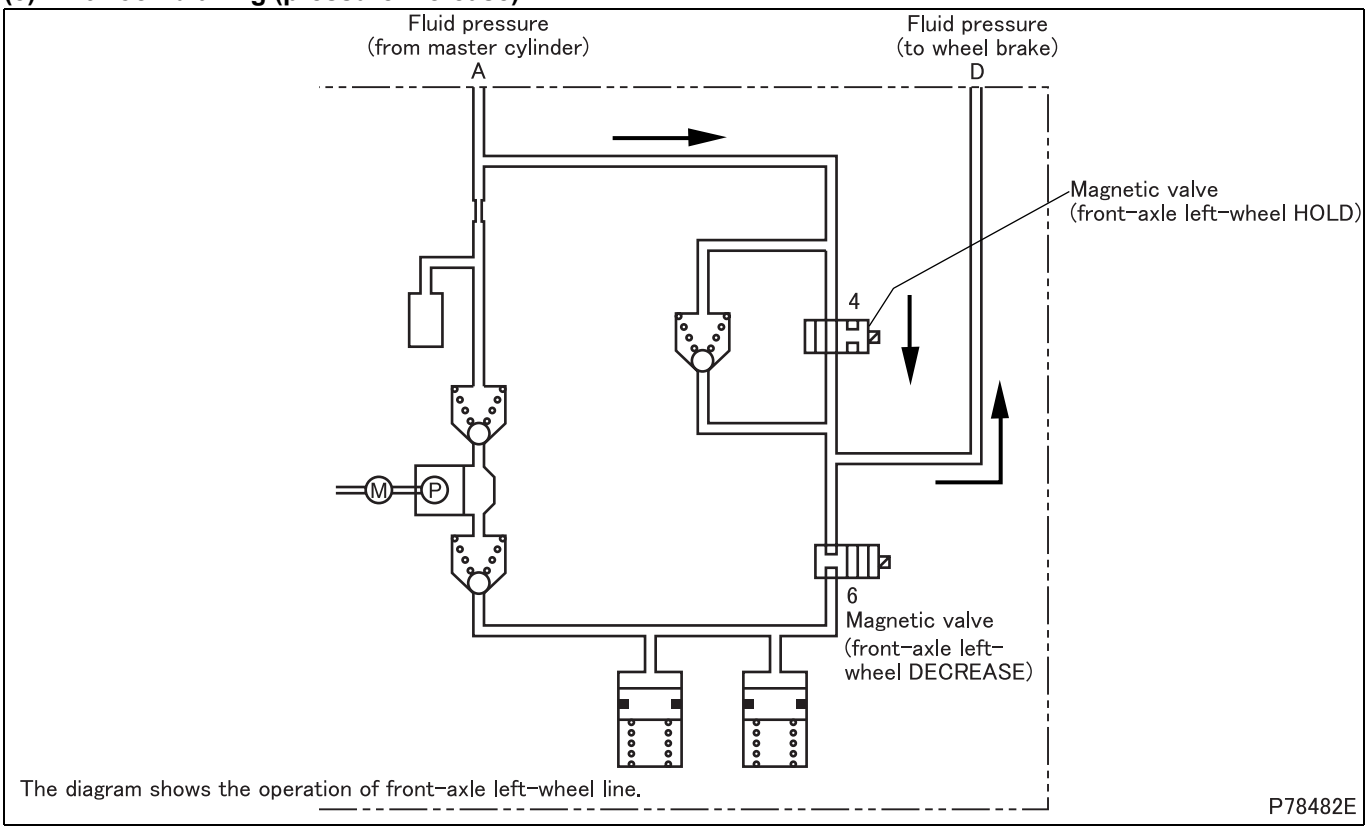

- When it becomes necessary to increase the fluid pressure D in the wheel brake, control signal from the hydraulic unit (electronic control unit) to the magnetic valve (front-axle left-wheel HOLD) and to the magnetic valve (front-axle left-wheel DECREASE) will be cut off.
- As a result, the magnetic valve (front-axle left-wheel HOLD) will open while the magnetic valve (front-axle left-wheel DECREASE) will close. Both valves are now in their normal-braking positions. Fluid pressure A being generated by the depression of the brake pedal is now applied to the wheel brake to increase the braking force.

2. Electronic Control System

2.1 Block diagram

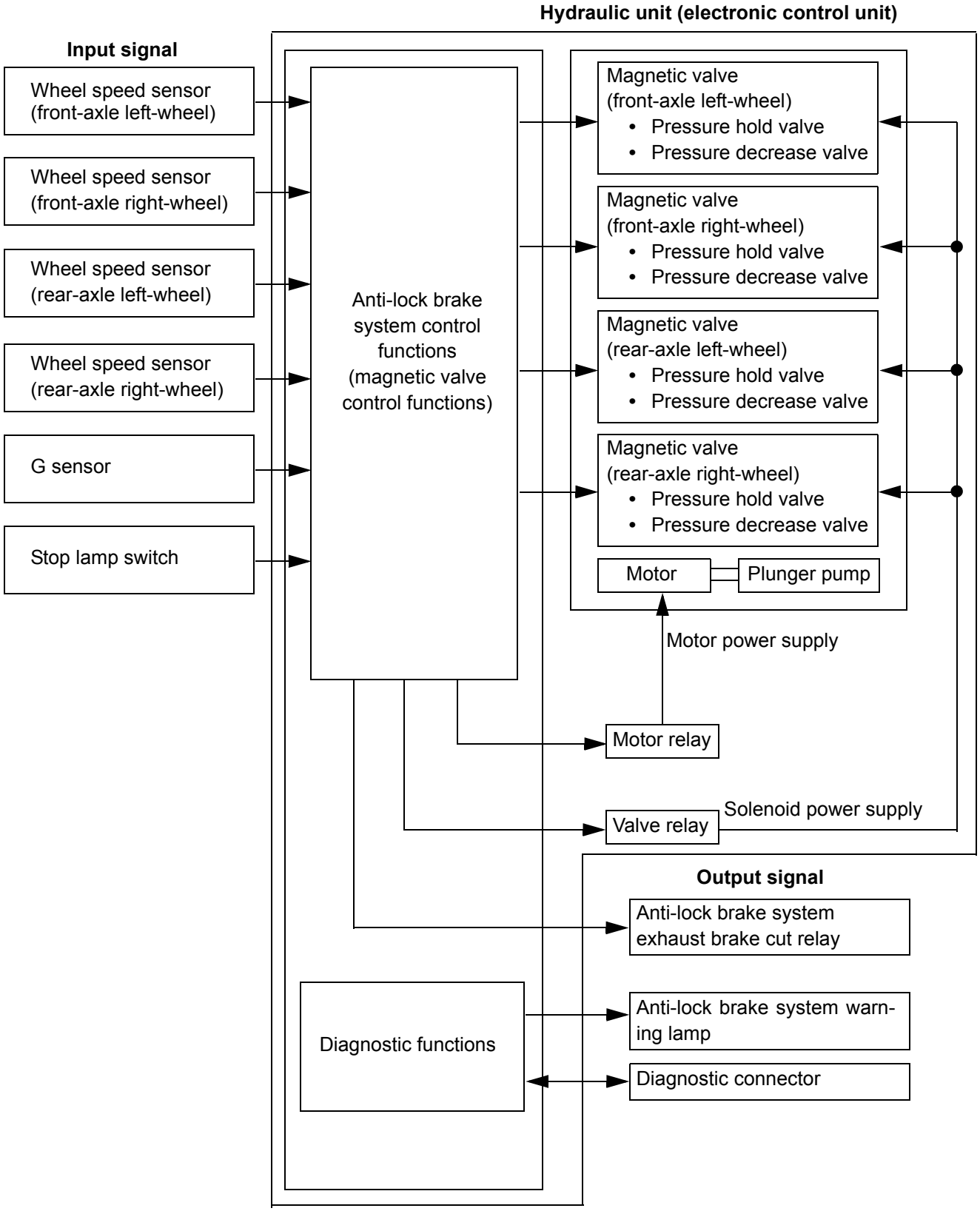

Part	Primary function or operation
Wheel speed sensor	Senses wheel speed
G sensor	Senses acceleration/deceleration
Stop lamp switch	Senses the depression of brake pedal
Anti-lock brake system exhaust brake cut relay	Cuts off exhaust brake in anti-lock braking mode
Anti-lock brake system warning lamp	Displays anti-lock brake system faults; Performs system check
Diagnostic connector	Communicates with Multi-Use Tester; Displays/Clears diagnosis codes

2.2 Anti-lock brake system control functions

- The hydraulic unit (electronic control unit) continuously monitors signals from the wheel speed sensors. The unit sends signal to magnetic valves.

(1) Anti-lock brake system fail-safe

- If any fault occurs in the anti-lock brake system, the warning lamp comes on to warn the driver of the fault and the normal braking will resume in place of the anti-lock braking which will be disabled.

(2) Anti-lock brake system and exhaust brake

- On slippery roads, wheel lock-up can result even from application of the exhaust brake. In the anti-lock braking mode, activation of the exhaust brake makes it difficult for anti-lock brake system to perform controlled braking. To avoid this, the exhaust brake will be disabled upon activation of anti-lock brake system even when the exhaust brake switch is in the “ON” position.
  The exhaust brake will automatically be enabled upon deactivation of anti-lock brake system.

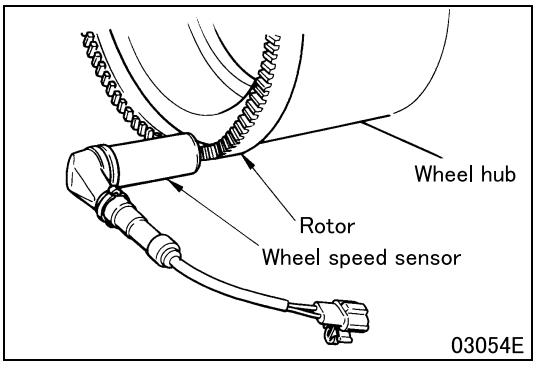

(3) Wheel speed sensor

- Each wheel speed sensor detects wheel speed and sends this as a signal to the hydraulic unit (electronic control unit). The sensor is essentially a magnetic pickup unit, consisting of a permanent magnet core and a coil of wire wound around the core.
- A rotor is fitted onto the wheel hub. This rotor, like a ring gear, has a set of evenly-spaced teeth directly facing the sensor. As the wheel rotates, these teeth pass through the magnetic flux of the sensor, inducing potential difference in the coil which is then sent as a signal (alternating voltage proportional to the wheel speed) to the hydraulic unit (electronic control unit).

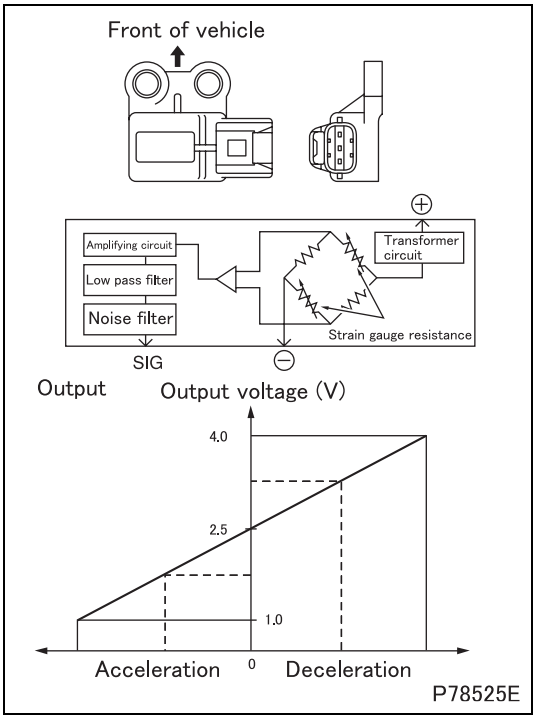

(4) G sensor

- On slippery roads, trucks can experience wheel lock-up due to the inertia of the powertrain. This makes it difficult for anti-lock brake system to perform controlled braking.
- To avoid this, in addition to the wheel speed sensors, a G sensor is also used to detect acceleration/deceleration and assist anti-lock brake system control.
- The G sensor is a semiconductor-type strain gauge. It detects acceleration or deceleration by converting acceleration/deceleration inertia into resistance and further converting this into voltage.

2.3 Diagnostic functions

- When the starter switch is in the ON position, the system continuously monitors the sensors and other system components. If any fault is detected, the system warns the driver of this by displaying the relevant fault information on the meter cluster. At the same time, the system also stores a relevant diagnosis code in the memory and starts operation in the fault mode.
- In the fault-mode operation, the system functions are limited to ensure safety for the driver and the vehicle. Stored diagnosis codes can be accessed using Scanning tool or can be read by observing the flashing of the warning lamp.

3. Electronic Control Unit Schematic Diagram

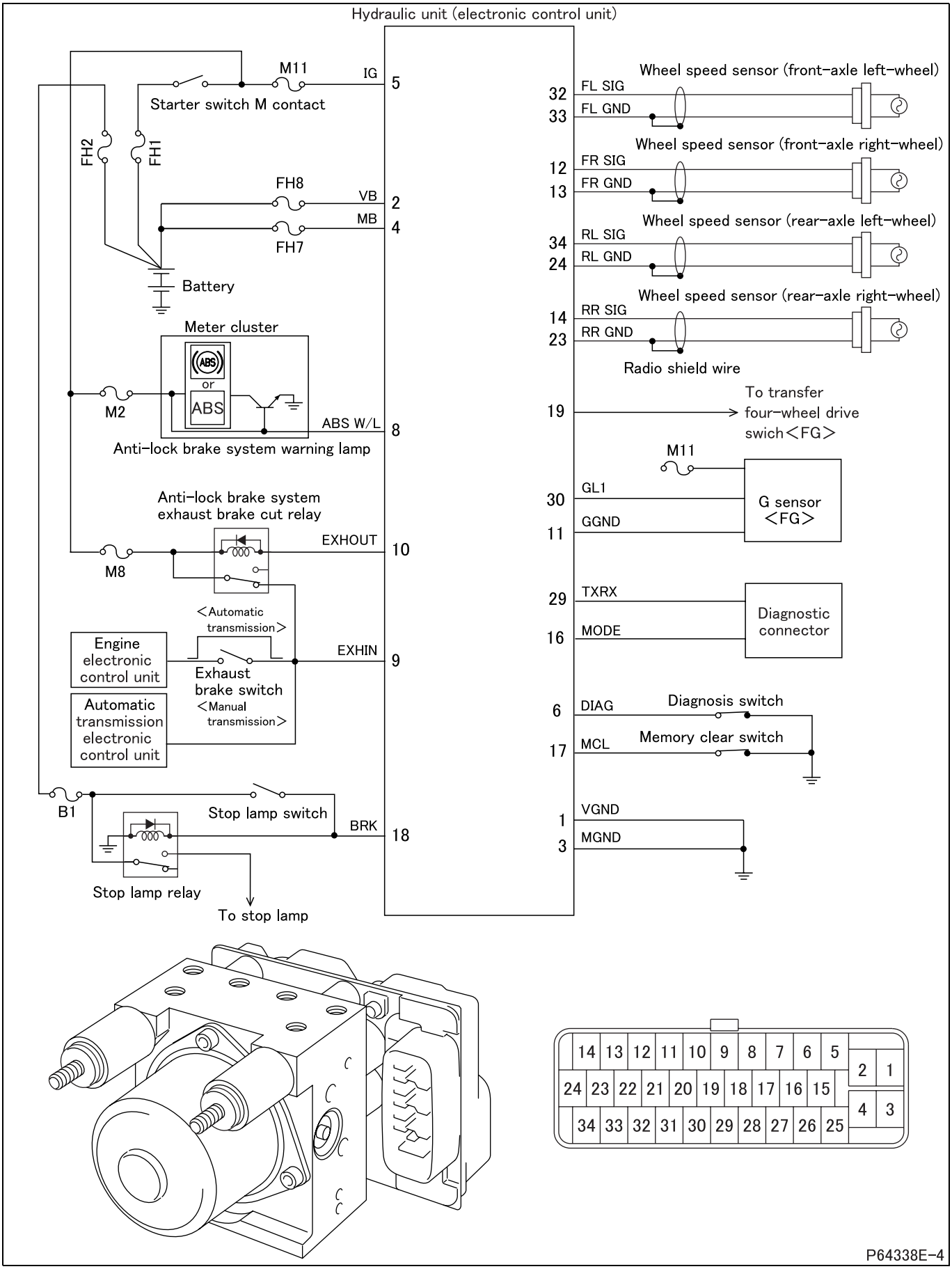

M E M O

TROUBLESHOOTING

1. Diagnosis Procedure

- Perform the inspection in accordance with the following flowchart.

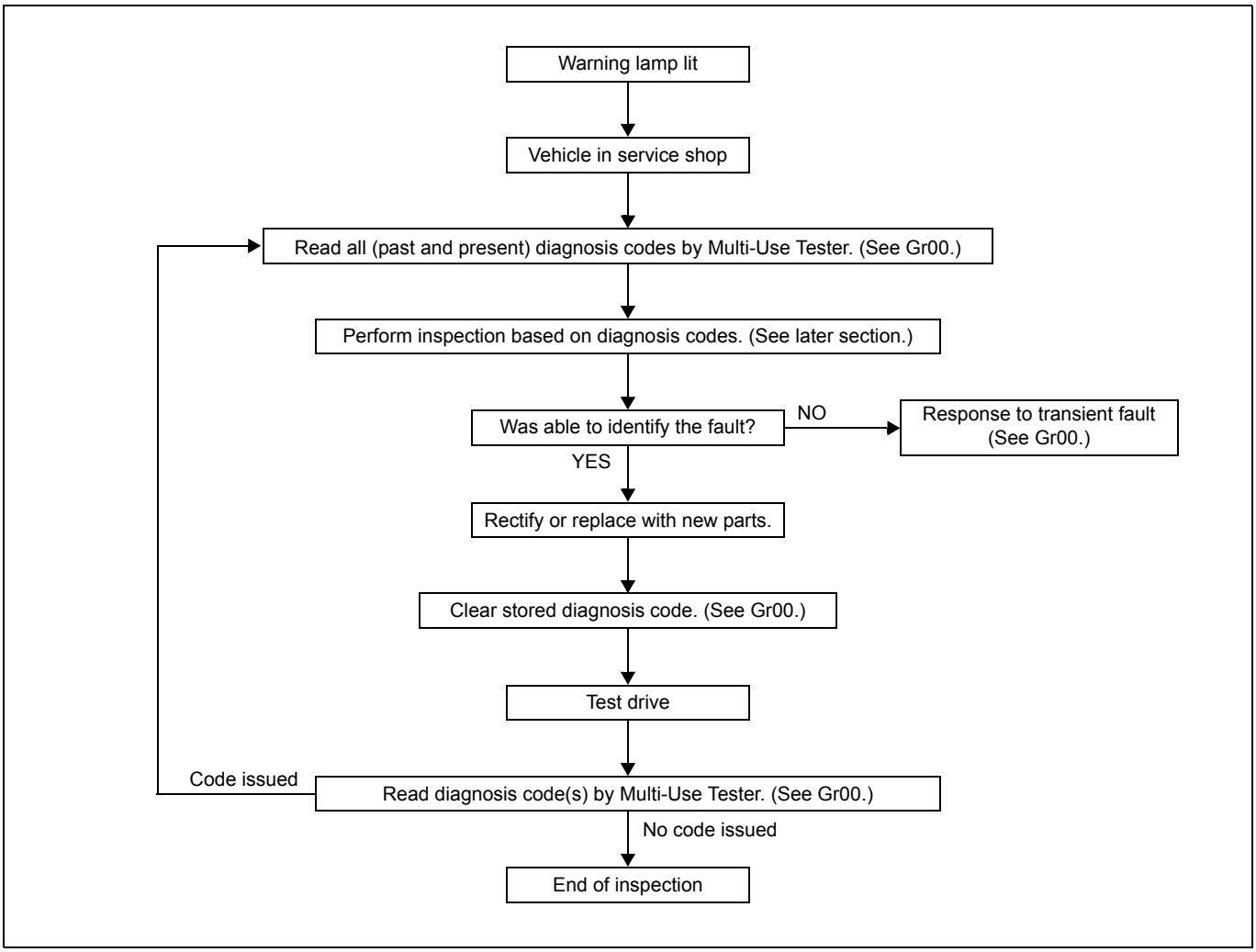

2. Diagnostic Precautions

- Before measuring voltage, check the battery for charged condition and specific gravity. If system inspection is performed with the battery uncharged or reduced in specific gravity, accurate measurements cannot be achieved.
- Before disconnecting battery cables, harnesses and connectors, set the starter switch to LOCK or OFF, then allow at least 20 seconds.
- To avoid having electrical parts damaged, set the starter switch and lighting switch to LOCK or OFF before reconnecting battery cables, harnesses and connectors.
- When performing measurement with the tester, handle the test bar carefully so that it does not damage internal circuit and other electrical parts of the electronic control unit to result in a short-circuit failure between terminals in connector or between connector and car body.
- Resistance is affected by temperature. Determine the necessity of resistance measurement following given temperature specification as a guide. Otherwise, use normal temperature (10 to 35°C {50 to 95°F}) as the measuring condition.

3. Diagnosis Based on Diagnosis Codes

3.1 List of diagnosis codes

Code	Message	Warning lamp indication
11	FR SENSOR	O
12	FL SENSOR	O
13	RR SENSOR	O
14	RL SENSOR	O
21	FR SENSOR SIG	O
22	FL SENSOR SIG	O
23	RR SENSOR SIG	O
24	RL SENSOR SIG	O
31	BATT VOLT ERR	O
34	G SENSOR	O
35	EXB CUT RLY	O
41	FR VALVE	O
42	FL VALVE	O
43	RR VALVE	O
44	RL VALVE	O
51	VALVE RLY	O
52	MOTOR RLY	O
53	MOTOR ERR	O
61	ECU ID ERR	O
63	ECU ERR	O
64	ILLEGAL WHEEL	O
65	LONG ABS	O

3.2 Code generation criteria and inspection items

11: FR SENSOR

Code generation criteria		Wheel speed sensor resistance out of range
Resettability		System resets when normal resistance is detected after starter switch OFF → ON.
Electronic control unit control		Anti-lock brake system disabled
Inspection item	Service data	11: FR SPEED
	Electronic control unit connector	01: Wheel speed sensor
	Electrical part	#329: Wheel speed sensor
	Wiring diagram	Wheel speed sensor circuit

12: FL SENSOR

Code generation criteria		Wheel speed sensor resistance out of range
Resettability		System resets when normal resistance is detected after starter switch OFF → ON.
Electronic control unit control		Anti-lock brake system disabled
Inspection item	Service data	12: FL SPEED
	Electronic control unit connector	01: Wheel speed sensor
	Electrical part	#329: Wheel speed sensor
	Wiring diagram	Wheel speed sensor circuit

13: RR SENSOR

Code generation criteria		Wheel speed sensor resistance out of range
Resettability		System resets when normal resistance is detected after starter switch OFF → ON.
Electronic control unit control		Anti-lock brake system disabled
Inspection item	Service data	13: RR SPEED
	Electronic control unit connector	01: Wheel speed sensor
	Electrical part	#329: Wheel speed sensor
	Wiring diagram	Wheel speed sensor circuit

14: RL SENSOR

Code generation criteria		Wheel speed sensor resistance out of range
Resettability		System resets when normal resistance is detected after starter switch OFF → ON.
Electronic control unit control		Anti-lock brake system disabled
Inspection item	Service data	14: RL SPEED
	Electronic control unit connector	01: Wheel speed sensor
	Electrical part	#329: Wheel speed sensor
	Wiring diagram	Wheel speed sensor circuit

21: FR SENSOR SIG

Code generation criteria		When driving off, no wheel speed sensor output or abrupt change in wheel speed sensor output
Resettability		System resets upon normal signal input after starter switch OFF → ON
Electronic control unit control		Anti-lock brake system disabled
Inspection item	Service data	11: FR SPEED
	Electrical part	#329: Wheel speed sensor
	Wiring diagram	Wheel speed sensor circuit
	Other	• Inspect rotor (See Gr26.) • Incorrectly installed wheel speed sensor

22: FL SENSOR SIG

Code generation criteria		When driving off, no wheel speed sensor output or abrupt change in wheel speed sensor output
Resettability		System resets upon normal signal input after starter switch OFF → ON
Electronic control unit control		Anti-lock brake system disabled
Inspection item	Service data	12: FL SPEED
	Electrical part	#329: Wheel speed sensor
	Wiring diagram	Wheel speed sensor circuit
	Other	• Inspect rotor (See Gr26.) • Incorrectly installed wheel speed sensor

23: RR SENSOR SIG

Code generation criteria		When driving off, no wheel speed sensor output or abrupt change in wheel speed sensor output
Resettability		System resets upon normal signal input after starter switch OFF → ON
Electronic control unit control		Anti-lock brake system disabled
Inspection item	Service data	13: RR SPEED
	Electrical part	#329: Wheel speed sensor
	Wiring diagram	Wheel speed sensor circuit
	Other	• Inspect rotor (See Gr27.) • Incorrectly installed wheel speed sensor

24: RL SENSOR SIG

Code generation criteria		When driving off, no wheel speed sensor output or abrupt change in wheel speed sensor output
Resettability		System resets upon normal signal input after starter switch OFF → ON
Electronic control unit control		Anti-lock brake system disabled
Inspection item	Service data	14: RL SPEED
	Electrical part	#329: Wheel speed sensor
	Wiring diagram	Wheel speed sensor circuit
	Other	• Inspect rotor (See Gr27.) • Incorrectly installed wheel speed sensor

31: BATT VOLT ERR

Code generation criteria		Electronic control unit power-supply terminal voltage out of range
Resettability		Normal signal with starter switch in the ON position
Electronic control unit control		Anti-lock brake system enabled
Inspection item	Service data	15: BATT VOLTAGE
	Electronic control unit connector	02: Electronic control unit power-supply voltage
	Wiring diagram	Electronic control unit power supply circuit

34: G SENSOR

Code generation criteria		G sensor terminal voltage out of range
Resettability		Normal signal after starter switch OFF → ON (re-energize electronic control unit)
Electronic control unit control		Anti-lock brake system enabled
Inspection item	Service data	16: G-SNS VOLTAGE
	Electrical part	#327: G sensor
	Other	G sensor circuit

35: EXB CUT RLY

Code generation criteria		Anti-lock brake system exhaust brake cut relay monitor terminal voltage out of range
Resettability		Normal signal after starter switch OFF → ON (re-energize electronic control unit)
Electronic control unit control		Exhaust brake control disabled (no exhaust brake cut during Anti-lock brake system operation)
Inspection item	Service data	22: EXB CUT RLY, 23: EXB MONITOR
	Actuator test	22: EXB RLY ON
	Electronic control unit connector	03: Anti-lock brake system exhaust brake cut relay
	Electrical part	#201: Anti-lock brake system exhaust brake cut relay
	Wiring diagram	Anti-lock brake system exhaust brake cut relay circuit

41: FR VALVE

Code generation criteria		Magnetic valve terminal voltage out of range
Resettability		Normal signal after starter switch OFF → ON (re-energize electronic control unit)
Electronic control unit control		Anti-lock brake system enabled
Inspection item	Service data	15: BATT VOLTAGE
	Actuator test	11: FR ABS MV ON
	Electronic control unit connector	02: Electronic control unit power-supply voltage
	Wiring diagram	Electronic control unit power-supply circuit
	Other	Clear memory and re-energize. If system still does not reset when driving at 10km/h or above, replace hydraulic unit (electronic control unit).

42: FL VALVE

Code generation criteria		Magnetic valve terminal voltage out of range
Resettability		Normal signal after starter switch OFF → ON (re-energize electronic control unit)
Electronic control unit control		Anti-lock brake system enabled
Inspection item	Service data	15: BATT VOLTAGE
	Actuator test	12: FL ABS MV ON
	Electronic control unit connector	02: Electronic control unit power-supply voltage
	Wiring diagram	Electronic control unit power-supply circuit
	Other	Clear memory and re-energize. If system still does not reset when driving at 10km/h or above, replace hydraulic unit (electronic control unit).

43: RR VALVE

Code generation criteria		Magnetic valve terminal voltage out of range
Resettability		Normal signal after starter switch OFF → ON (re-energize electronic control unit)
Electronic control unit control		Anti-lock brake system enabled
Inspection item	Service data	15: BATT VOLTAGE
	Actuator test	13: RR ABS MV ON
	Electronic control unit connector	02: Electronic control unit power-supply voltage
	Wiring diagram	Electronic control unit power-supply circuit
	Other	Clear memory and re-energize. If system still does not reset when driving at 10km/h or above, replace hydraulic unit (electronic control unit).

44: RL VALVE

Code generation criteria		Magnetic valve terminal voltage out of range
Resettability		Normal signal after starter switch OFF → ON (re-energize electronic control unit)
Electronic control unit control		Anti-lock brake system enabled
Inspection item	Service data	15: BATT VOLTAGE
	Actuator test	14: RL ABS MV ON
	Electronic control unit connector	02: Electronic control unit power-supply voltage
	Wiring diagram	Electronic control unit power-supply circuit
	Other	Clear memory and re-energize. If system still does not reset when driving at 10km/h or above, replace hydraulic unit (electronic control unit).

51: VALVE RLY

Code generation criteria		Terminal voltage of valve relay in electronic control unit out of range
Resettability		Normal signal after starter switch OFF → ON (re-energize electronic control unit)
Electronic control unit control		Anti-lock brake system enabled
Inspection item	Service data	15: BATT VOLTAGE
	Electronic control unit connector	02: Electronic control unit power-supply voltage
	Wiring diagram	Electronic control unit power-supply circuit
	Other	Clear memory and re-energize. If system still does not reset when driving at 10km/h or above, replace hydraulic unit (electronic control unit).

52: MOTOR RLY

Code generation criteria		Terminal voltage of motor relay in electronic control unit out of range
Resettability		Normal signal after starter switch OFF → ON (re-energize electronic control unit)
Electronic control unit control		Anti-lock brake system enabled
Inspection item	Service data	32: MOTOR RLY
	Actuator test	21: ABS MOTOR ON
	Electronic control unit connector	02: Electronic control unit power-supply voltage
	Wiring diagram	Electronic control unit power-supply circuit

53: MOTOR ERR

Code generation criteria		Motor terminal voltage out of range
Resettability		Normal signal after starter switch OFF → ON (re-energize electronic control unit)
Electronic control unit control		Anti-lock brake system enabled
Inspection item	Wiring diagram	Electronic control unit power-supply circuit
	Other	Clear memory and re-energize. If system still does not reset when driving at 10km/h or above, replace hydraulic unit (electronic control unit).

61: ECU ID ERR

Code generation criteria		Wiring incorrect for vehicle system
Resettability		Normal signal after starter switch OFF → ON (re-energize electronic control unit)
Electronic control unit control		Anti-lock brake system enabled
Inspection item	Electronic control unit connector	04: Configuration check
	Wiring diagram	Anti-lock brake system EXB cut relay circuit

63: ECU ERR

Code generation criteria	Electronic control unit internal fault
Resettability	Normal signal after starter switch OFF → ON (re-energize electronic control unit)
Electronic control unit control	Anti-lock brake system enabled
Other	Clear memory and re-energize. If system still does not reset, replace hydraulic unit (electronic control unit).

64: ILLEGAL WHEEL

Code generation criteria		At 30 km/h {18.6 mph} or above, difference in output signal between wheel speed sensors exceeds the limit. (The difference should be less than 20% between front and rear wheel speed sensors and less than 10% between left and right wheel speed sensors.)
Resettability		Normal signal after starter switch OFF → ON (re-energize electronic control unit)
Electronic control unit control		Anti-lock brake system disabled
Inspection item	Service data	11: FR SPEED, 12: FL SPEED, 13: RR SPEED, 14: RL SPEED * Min. speed displayed = 2 km/h {1.2 mph}
	Electrical part	#329: Wheel speed sensor
	Wiring diagram	Wheel speed sensor circuit

65: LONG ABS

Code generation criteria		Anti-lock brake system operates longer than the specified time duration.
Resettability		Normal signal after starter switch OFF → ON (re-energize electronic control unit)
Electronic control unit control		Anti-lock brake system disabled
Inspection item	Service data	11: FR SPEED, 12: FL SPEED, 13: RR SPEED, 14: RL SPEED
	Electrical part	#329: Wheel speed sensor
	Wiring diagram	Wheel speed sensor circuit
	Other	• Inspect rotor (See Gr26, Gr27.) • Incorrectly installed wheel speed sensor

4. Multi-Use Tester Service Data

NOTE

- **Service data can be accessed while actuator test is being performed, and vice versa.**

No.	Item	Data	Diagnosis condition	Pass criteria
11	FR SPEED	■■■. ■km/h	Drive at a constant speed	Synchronized with speedometer
12	FL SPEED	■■■. ■km/h		
13	RR SPEED	■■■. ■km/h		
14	RL SPEED	■■■. ■km/h		
15	BATT VOLTAGE	■■. ■■V	Starter switch ON	Correspond with battery voltage
16	G-SNS VOLTAGE	■. ■■■V	Vehicle parked horizontally; Starter switch ON	2.3 to 2.7 V
21	BRAKE SW	ON/OFF	Brake pedal pressed	ON
			Brake pedal released	OFF
22	EXB CUT RLY	ON/OFF	When anti-lock brake system exhaust brake cut relay activated	ON
			When anti-lock brake system exhaust brake cut relay not activated	OFF
			[Actuator test] 22: EXB RLY ON	
23	EXB MONITOR	ON/OFF	When anti-lock brake system exhaust brake cut relay activated	ON
			When anti-lock brake system exhaust brake cut relay not activated	OFF
			[Actuator test] 22: EXB RLY ON	
24	ABS LAMP	ON/OFF	Anti-lock brake system warning lamp ON	ON
			Anti-lock brake system warning lamp OFF	OFF
			[Actuator test] 23: ABS LAMP ON	
25	DIAGNOSIS SW	OPEN/CLOSE	Diagnosis switch fuse removed	OPEN
			Diagnosis switch fuse plugged in	CLOSE
26	DIAG.RESET SW	OPEN/CLOSE	Memory clear switch fuse removed	OPEN
			Memory clear switch fuse plugged in	CLOSE
27	4WD SW	4WD/2WD	FE	4WD
			FG	2WD
31	VALVE RLY	ON/OFF	When valve relay activated	ON
			When valve relay not activated	OFF
32	MOTOR RLY	ON/OFF	Motor in operation	ON
			Motor stationary	OFF
			[Actuator test] 11: FR ABS MV ON 12: FL ABS MV ON 13: RR ABS MV ON 14: RL ABS MV ON 21: ABS MOTOR ON	

No.	Item	Data	Diagnosis condition	Pass criteria
41	FR-DV	ON/OFF	Magnetic valve energized (front-axle right-wheel DECREASE)	ON
			Magnetic valve de-energized (front-axle right-wheel DECREASE)	OFF
			[Actuator test] 11: FR ABS MV ON	
42	FR-HV	ON/OFF	Magnetic valve energized (front-axle right-wheel HOLD)	ON
			Magnetic valve de-energized (front-axle right-wheel HOLD)	OFF
			[Actuator test] 11: FR ABS MV ON	
43	FL-DV	ON/OFF	Magnetic valve energized (front-axle left-wheel DECREASE)	ON
			Magnetic valve de-energized (front-axle left-wheel DECREASE)	OFF
			[Actuator test] 12: FL ABS MV ON	
44	FL-HV	ON/OFF	Magnetic valve energized (front-axle left-wheel HOLD)	ON
			Magnetic valve de-energized (front-axle left-wheel HOLD)	OFF
			[Actuator test] 12: FL ABS MV ON	
45	RR-DV	ON/OFF	Magnetic valve energized (rear-axle right-wheel DECREASE)	ON
			Magnetic valve de-energized (rear-axle right-wheel DECREASE)	OFF
			[Actuator test] 13: RR ABS MV ON	
46	RR-HV	ON/OFF	Magnetic valve energized (rear-axle right-wheel HOLD)	ON
			Magnetic valve de-energized (rear-axle right-wheel HOLD)	OFF
			[Actuator test] 13: RR ABS MV ON	
47	RL-DV	ON/OFF	Magnetic valve energized (rear-axle left-wheel DECREASE)	ON
			Magnetic valve de-energized (rear-axle left-wheel DECREASE)	OFF
			[Actuator test] 14: RL ABS MV ON	
48	RL-HV	ON/OFF	Magnetic valve energized (rear-axle left-wheel HOLD)	ON
			Magnetic valve de-energized (rear-axle left-wheel HOLD)	OFF
			[Actuator test] 14: RL ABS MV ON	

5. Actuator Test Using Multi-Use Tester

NOTE

- **Service data can be accessed while actuator test is being performed, and vice versa.**

No.	Item	Description	Verification method
11	FR ABS MV ON	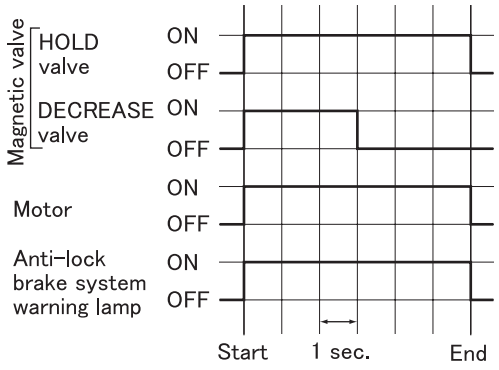 P49621E	Hydraulic unit (electronic control unit) functional check [Service data] 32: MOTOR RLY 41: FR-DV 42: FR-HV 43: FL-DV 44: FL-HV 45: RR-DV 46: RR-HV 47: RL-DV 48: RL-HV Use the data when bleeding the system (See Gr 35A.)
12	FL ABS MV ON		
13	RR ABS MV ON		
14	RL ABS MV ON		
21	ABS MOTOR ON	Operates the motor (for 2 sec). 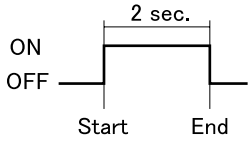 P49620E	Motor noise [Service data] 32: MOTOR RLY
22	EXB RLY ON	Operates the anti-lock brake system exhaust brake cut relay (for 2 sec). 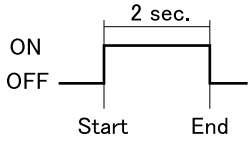 P49620E	Relay noise [Service data] 22: EXB CUT RLY 23: EXB MONITOR
23	ABS LAMP ON	Turns on the anti-lock brake system warning lamp (For 2 sec). 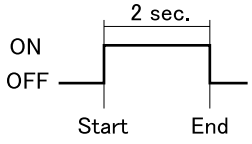 P49620E	Anti-lock brake system warning lamp ON [Service data] 24: ABS LAMP

6. Inspection at Hydraulic Unit (Electronic Control Unit) Connector

- This inspection is intended to aid troubleshooting by verifying whether or not hydraulic unit (electronic control unit) signals are correctly transmitted via the vehicle harness and connector.
  The **01**, **02** ··· in the table below is a cross reference to the electronic control unit connector inspection items listed in the table in "**3. Diagnosis Based on Diagnosis Codes**" of this manual.

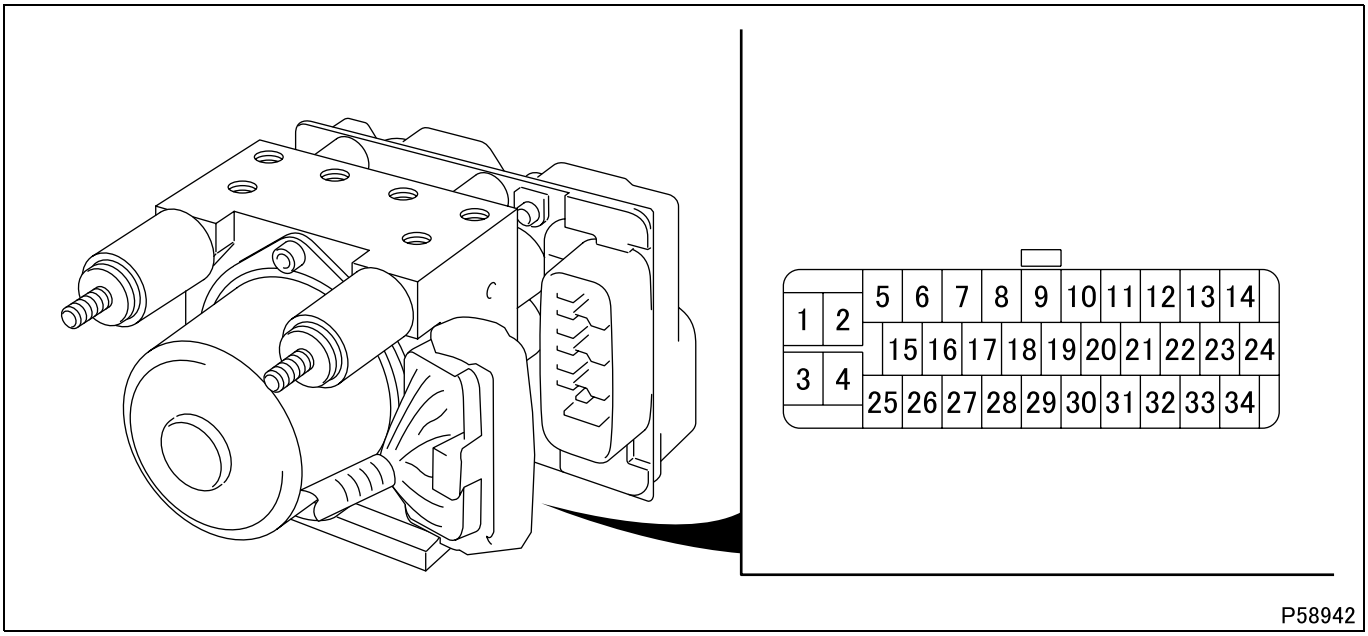

- The inspection requires the connector with a locking feature to be uncoupled. Before carrying out the inspection, read the "Hydraulic Unit Connector Uncoupling and Coupling" in this manual.

CAUTION ⚠

- **Do not touch terminals that are irrelevant to the inspection being performed. When using a tester, be careful not to cause short circuit across the terminals being measured.**

Check item	Measurement
01 Wheel speed sensor resistance	[Condition] • Starter switch OFF • With the connector uncoupled, inspect at vehicle harness connector half [Pass criteria] Between terminals: 12 and 13 (FR) Between terminals: 32 and 33 (FL) Between terminals: 14 and 23 (RR) Between terminals: 34 and 24 (RL) • The resistance measured should be 1 to 2 kΩ
02 Electronic control unit power-supply voltage	[Condition] • Starter switch ON • With the connector uncoupled, inspect at vehicle harness connector half [Pass criteria] Between terminals (+) - (–): 2 - 1 (VB) 4 - 3 (MB) 5 - 1 (IG) • 10 to 18 V

Check item	Measurement
03 Anti-lock brake system exhaust brake cut relay voltage	[Condition] • Starter switch ON • With the connector uncoupled, inspect at vehicle harness connector half [Pass criteria] Between terminals (+) - (–): 10 - 1 (EXHOUT) 9 - 1 (EXHIN) • 10 to 18 V
04 Configuration check	[Pass criteria] Terminals 11, 22 and 30 should be free (no wiring connected). <Two-wheel drive> **CAUTION ⚠** • **If wires are connected to these terminals, disconnect the wires and insulate the exposed portions.**

ON-VEHICLE INSPECTION AND ADJUSTMENT

1. Functional Check

1.1 Inspection with vehicle stationary

- While pressing the brake pedal, check the hydraulic unit (electronic control unit) and the brake pipes and connections for fluid leakage.
- If fluid is leaking from the hydraulic unit (electronic control unit), replace the unit. If fluid is leaking from the brake pipes or connections, retighten the hardware.

1.2 Inspection using brake tester

- Using the brake tester, check each wheel for braking force following the normal procedures.
- If faulty, check the wheel brake in question, the service brake system and the hydraulic unit (electronic control unit).

1.3 Inspection of anti-lock brake system operation while driving the vehicle

WARNING ⚠

- **During this inspection, do not allow any other vehicle or anyone into the test course.**

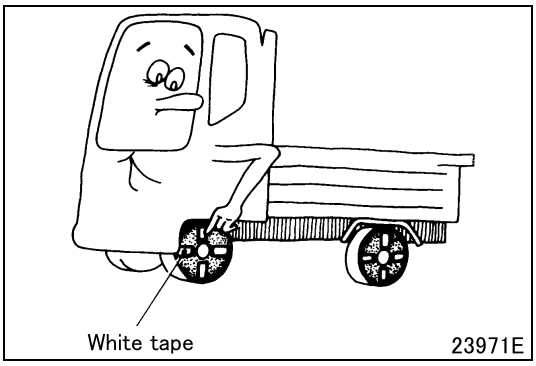

- The vehicle being tested should be in the unloaded state.
- Apply white tapes onto the walls of front and rear tires to aid the observation of wheel rotation.
- Turn the starter switch from LOCK to ON. The warning lamp should come on and, in several seconds, go out.
- Drive the vehicle at 20 to 30 km/h {12 to 19 mph} and apply the brakes hard. The wheels should not lock up.

2. Inspection of Hydraulic Unit (Electronic Control Unit) Operation

2.1 Inspection using Multi-Use Tester

- The hydraulic unit (electronic control unit) cannot be inspected for operation during control effected by the electronic control unit at the time of a fault which will cause a diagnosis code to occur. The inspection should be performed after system recovery from the control through troubleshooting.
- Jack up the vehicle and support it on rigid racks, or place the vehicle on the rollers of a brake tester.
- Apply the parking brake when testing the front brake. Apply chokes to the front wheels when testing the rear brake.
- During inspection, keep the brake tester rollers and the tires dry.
- With the parking brake released, feel the brake drag of each wheel. When the brake tester is used, read the brake drag indicated in the tester.
- Connect the Multi-Use Tester. (See Gr00.)
- With the transmission in neutral, start the engine.

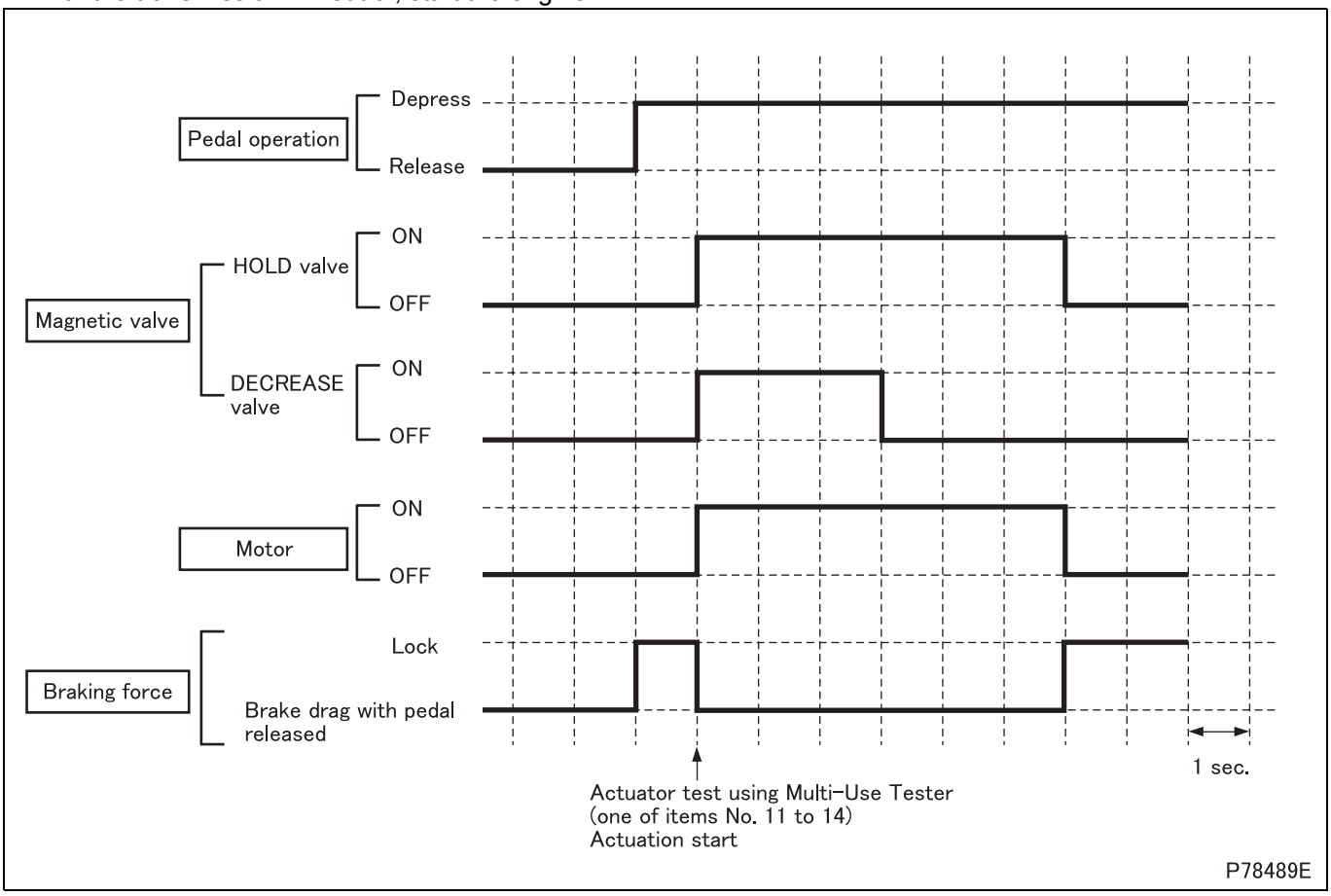

Diagnosis table (actuator test using Multi-Use Tester)

No.	Multi-Use Tester display	Operation	Inspection
11	FR ABS MV ON	(1) Press the brake pedal to lock up the wheel. (2) Using Multi-Use Tester, select the wheel being tested and move the relevant actuator. (3) Rotate the wheel being tested using the brake tester or by hand, and check the variation in braking force.	Braking force drops for 6 seconds following wheel lock-up.
12	FL ABS MV ON		
13	FR ABS MV ON		
14	RL ABS MV ON		

- When abnormality is found as a result of inspection, take a remedial action in accordance with the table below.

Symptom	Cause	Remedial action
Wheel will not lock up when brake pedal is pressed.	Clogged brake line outside hydraulic unit (electronic control unit)	Inspect and clean brake line
	Clogged line inside hydraulic unit (electronic control unit)	Replace hydraulic unit (electronic control unit)
Braking force will not drop.	Incorrectly connected hydraulic unit (electronic control unit) brake piping	Connect piping correctly
	Faulty hydraulic unit (electronic control unit) magnetic valve	Replace hydraulic unit (electronic control unit)

3. Inspection after Replacing or Removing/Installing Hydraulic Unit (Electronic Control Unit)

- Check the hydraulic unit (electronic control unit) for normal operation.
- After replacing or removing/installing the hydraulic unit (electronic control unit), always check the system for normal operation. Controlled braking will not be available if the piping is incorrect.
- After replacement or reinstallation of the hydraulic unit (electronic control unit), be sure to bleed the brake system. (See Gr35A.)
- The vehicle harness connector is equipped with a locking device. For correct use of the device, see “HYDRAULIC UNIT CONNECTOR COUPLING AND UNCOUPLING” in this manual.

4. Oscilloscopic Inspection through Wheel Speed Sensor Signal Waveform

- The tester is inappropriate to inspection for dented rotor or missing rotor tooth. Instead, use the oscilloscope function of the Multi-Use Tester or an oscilloscope capable of waveform recording.
- In many cases, dented rotor or missing rotor tooth results from the contact of the rotor press-fitted in the hub tip with the axle or elsewhere that can occur in the process of the hub and brake drum being assembled to the axle. Therefore, care should be taken so that the rotor does not touch other parts when the hub and brake drum are assembled to the axle.

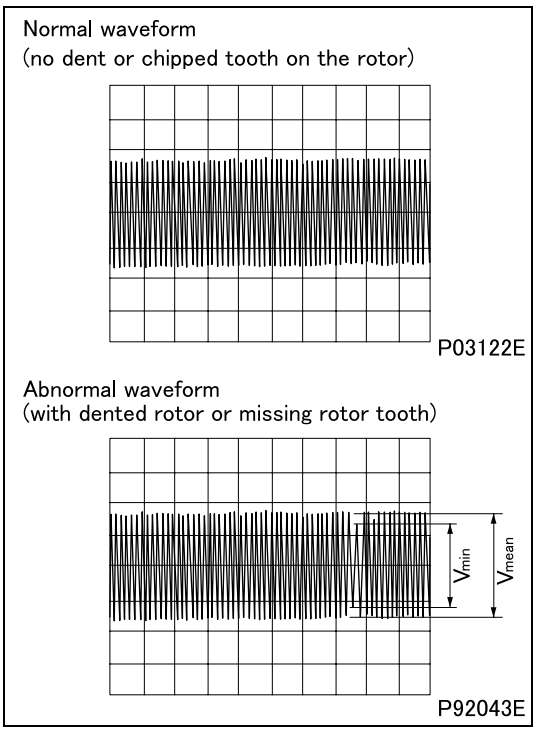

4.1 Inspection

- Jack up the wheel under inspection. Disconnect the wheel speed sensor connector.
- Connect the oscilloscope terminals to the disconnected connector. Rotate the wheel at a certain speed and check oscilloscopic waveform for dented rotor or missing rotor tooth.
- If any wave is evidently smaller in width than others, there should be a dented rotor or missing rotor tooth. The standard wave width is as calculated below.

$$\frac{\text{Vmean} - \text{Vmin}}{\text{Vmean}} \times 100 \leq 20\%$$

where
Vmin: Minimum wave width
Vmean: Average of maximum wave widths

- If there is a wave more than 20% smaller in width than others, visually examine the rotor for the defect and replace if necessary. (See Gr26, 27).

HYDRAULIC UNIT CONNECTOR COUPLING AND UNCOUPLING

◆Removal procedure◆

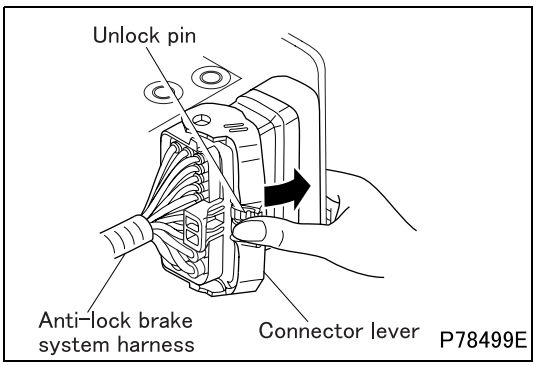

■ **Removal: Hydraulic unit connector**

- While holding the connector, push the unlock pin on the connector lever with finger and unlock.
- With the connector unlocked, push the connector lever in the direction of the arrow.

CAUTION ⚠

- **If the connector lever is hard to move, return the lever to the locked position and then try again. Forcing the lever to move may damage the lever.**

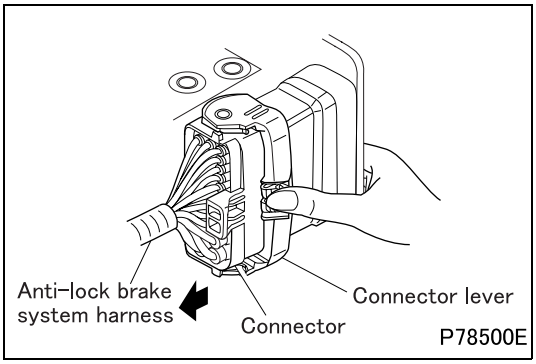

- With the connector lever fully pushed back, remove it together with the anti-lock brake system harness while holding the connector.

◆Installation procedure◆

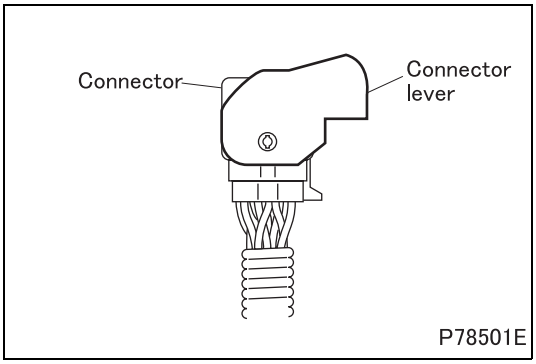

■ **Installation: Hydraulic unit connector**

- Ensure that the connector terminals are clean and free from foreign matter.
- Set the connector lever to the illustrated position.

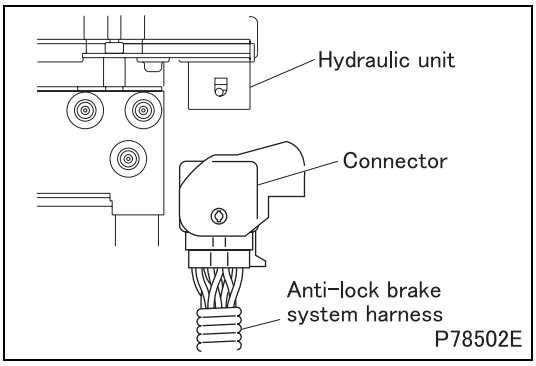

- Insert the anti-lock brake system harness connector straight into the other connector half on the hydraulic unit.

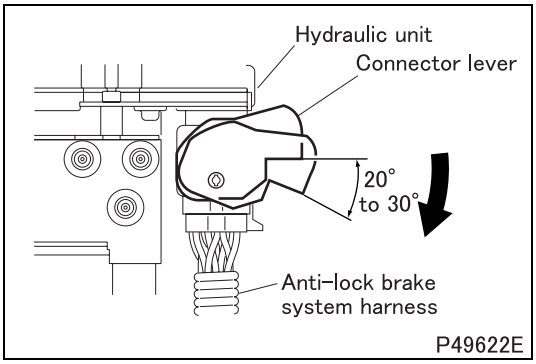

- Check that the connector lever can be turned with a small force to the specified angle in the direction of the arrow.

CAUTION ⚠

- **If the connector lever fails to turn to the specified angle, perform connector installation procedure again from the beginning. Without doing this, the connector lever could be broken when it is turned in the next step.**

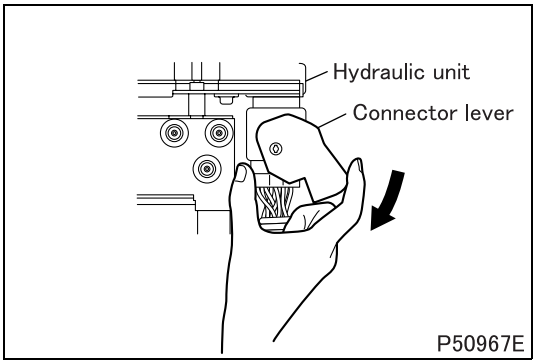

- In order to lock the connector lever, turn the lever in the direction of the arrow until it clicks by applying force to the central portion while holding the connector body.
- If the connector is not completely connected, the anti-lock brake system (ABS) warning lamp may be illuminated. If the lamp is illuminated, connector installation steps must be performed again from the beginning.

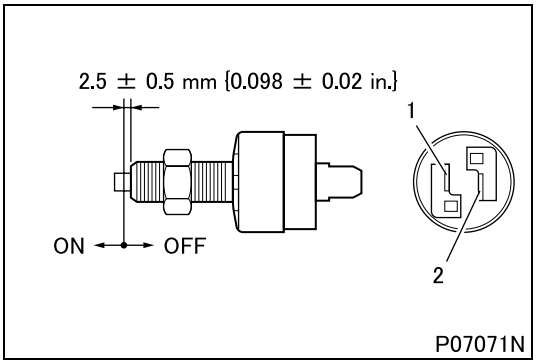

#042 Inspection of stop lamp switch

<Type (1)>

Switch position	Continuity between the terminals
OFF	–
ON	1 – 2

- If faulty, replace the switch.

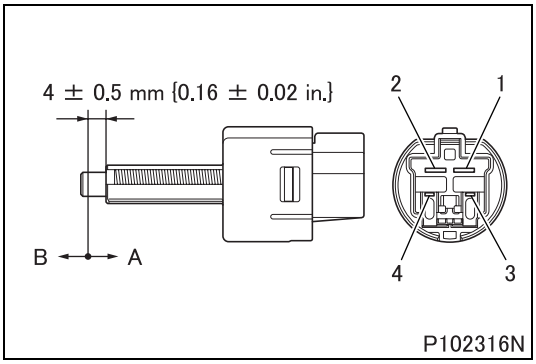

<Type (2)>

Switch position	Continuity between the terminals
A	3 – 4
B	1 – 2

- If faulty, replace the switch.

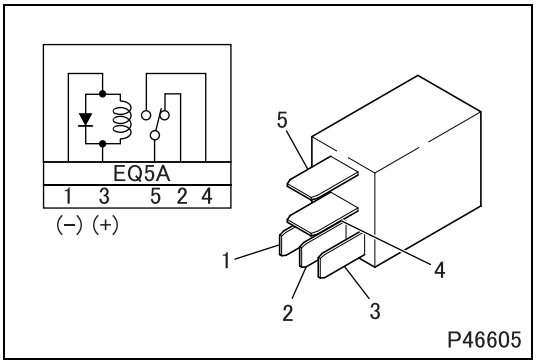

#201 Inspection of relay (normally open 5-pin relay)

- Check the relay for continuity and normal operation. If faulty, replace the relay.

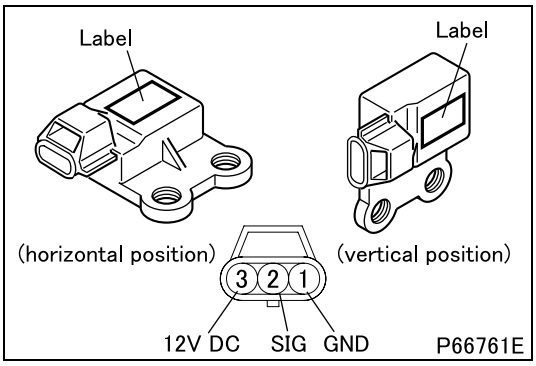

#327 Inspection of G sensor

- Apply a 12V DC across terminals 3 and 1 of the G sensor.
- Measure the G sensor output voltage between terminals 2 and 1 for both when the sensor is in a horizontal position and when it is in a vertical position.

Standard value	Horizontal position	2.3 to 2.7 V
	Vertical position	3.3 to 3.7 V

- If any of the measurements is not within the standard value range, replace the sensor.

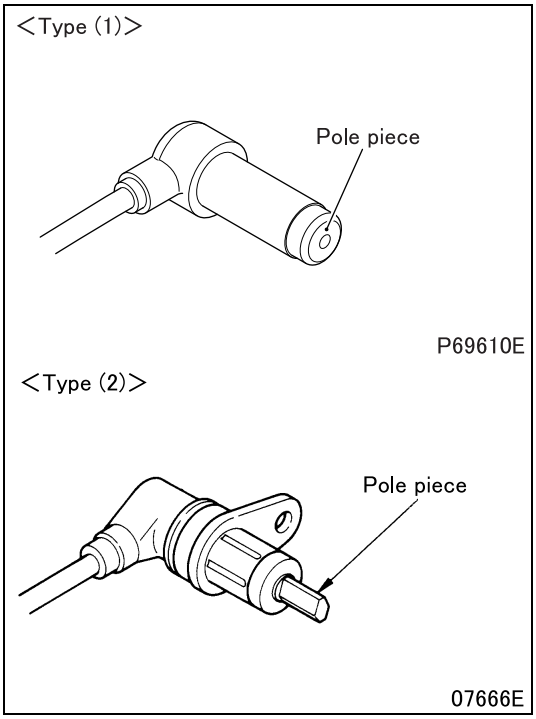

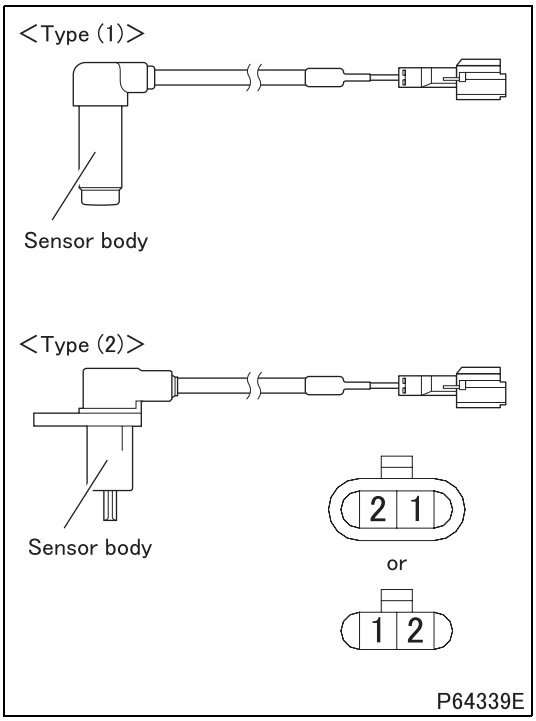

#329 Inspection of wheel speed sensor

- Manufacturer of wheel speed sensor.

Type	Manufacturer
(1)	SUMITOMO ELECTRIC
(2)	Bosch

- Carry out the following checks. If faulty, replace the wheel speed sensor.

CAUTION ⚠

- **The pole piece is magnetized by the magnet housed in the wheel speed sensor. Be careful not to allow metal parts to stick onto the pole piece.**

(1) Resistance between terminals

Standard value	Type (1)	1.4 ± 0.2 kΩ
	Type (2)	1.6 ± 0.16 kΩ

(2) Insulation resistance (between the sensor body and each terminal)

Standard value	Type (1)	1000 kΩ or above
	Type (2)	100 kΩ or above

(3) Open circuit

- If open circuit is suspected, remove the harness clamps and wiggle the harness to determine whether it is an intermittent fault or not. Check also the connector terminals for proper connection.

COMPONENTS LOCATION

A01 to 11

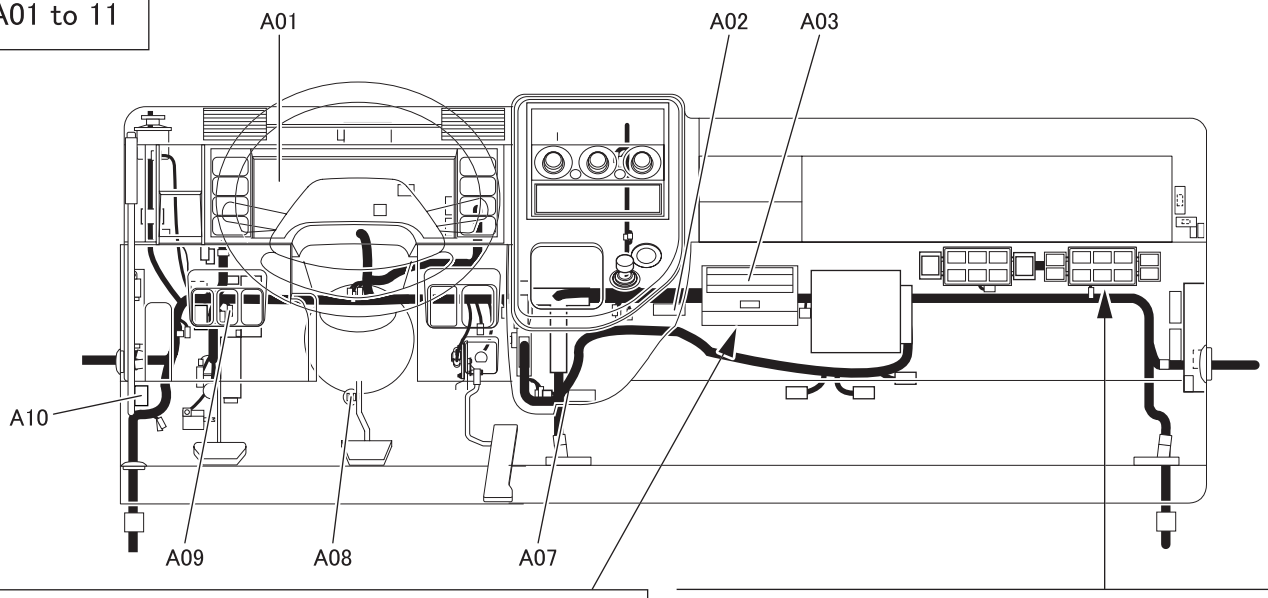

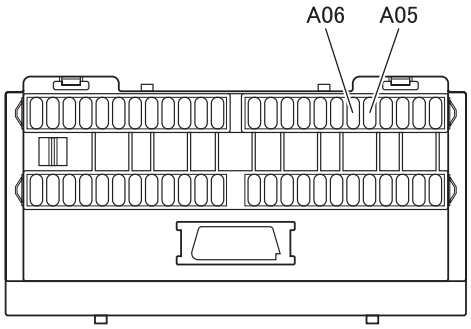

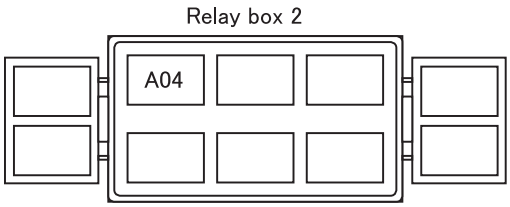

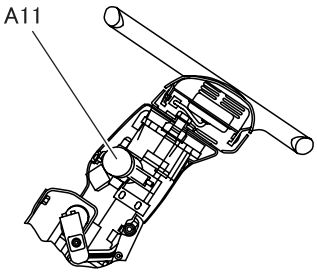

A01 Meter cluster
A02 Joint connector (J/C-1)
A03 Fuse box
A04 ABS exhaust brake cut relay
A05 Memory clear switch
A06 Diagnosis switch
A07 Joint connector (J/C-M1)
A08 Stop lamp switch
A09 G sensor <FG>
A10 Diagnostic connector
A11 Starter switch

ABS : Anti-lock brake system
J/C : Joint connector

(meter cluster backward view)

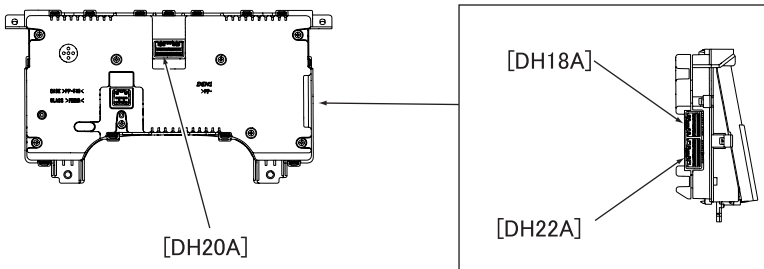

L03392

B01 to 16

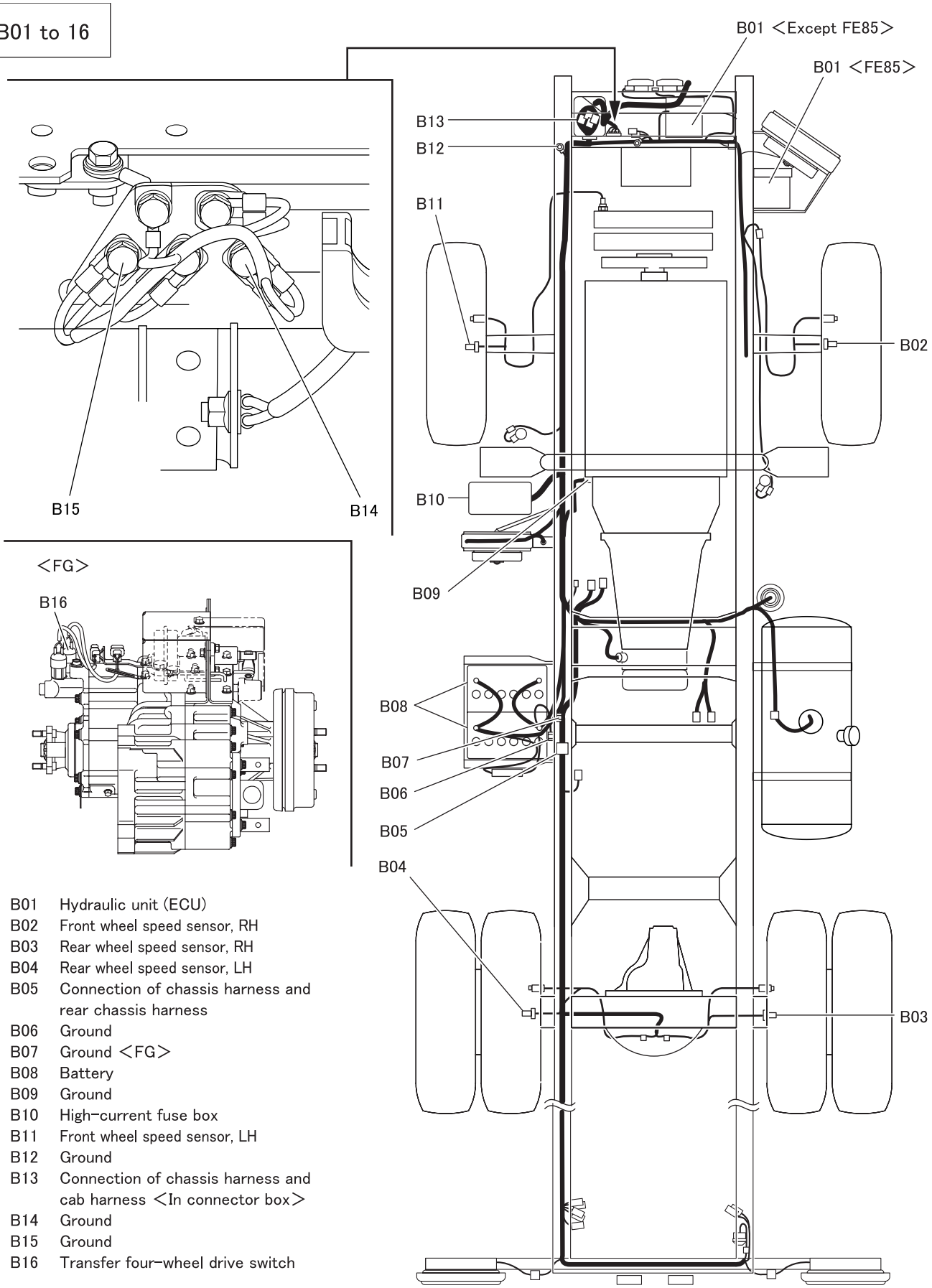

B01 Hydraulic unit (ECU)
B02 Front wheel speed sensor, RH
B03 Rear wheel speed sensor, RH
B04 Rear wheel speed sensor, LH
B05 Connection of chassis harness and rear chassis harness
B06 Ground
B07 Ground <FG>
B08 Battery
B09 Ground
B10 High-current fuse box
B11 Front wheel speed sensor, LH
B12 Ground
B13 Connection of chassis harness and cab harness <In connector box>
B14 Ground
B15 Ground
B16 Transfer four-wheel drive switch

ECU : Electronic control unit

L03393

ELECTRICAL WIRING DIAGRAM

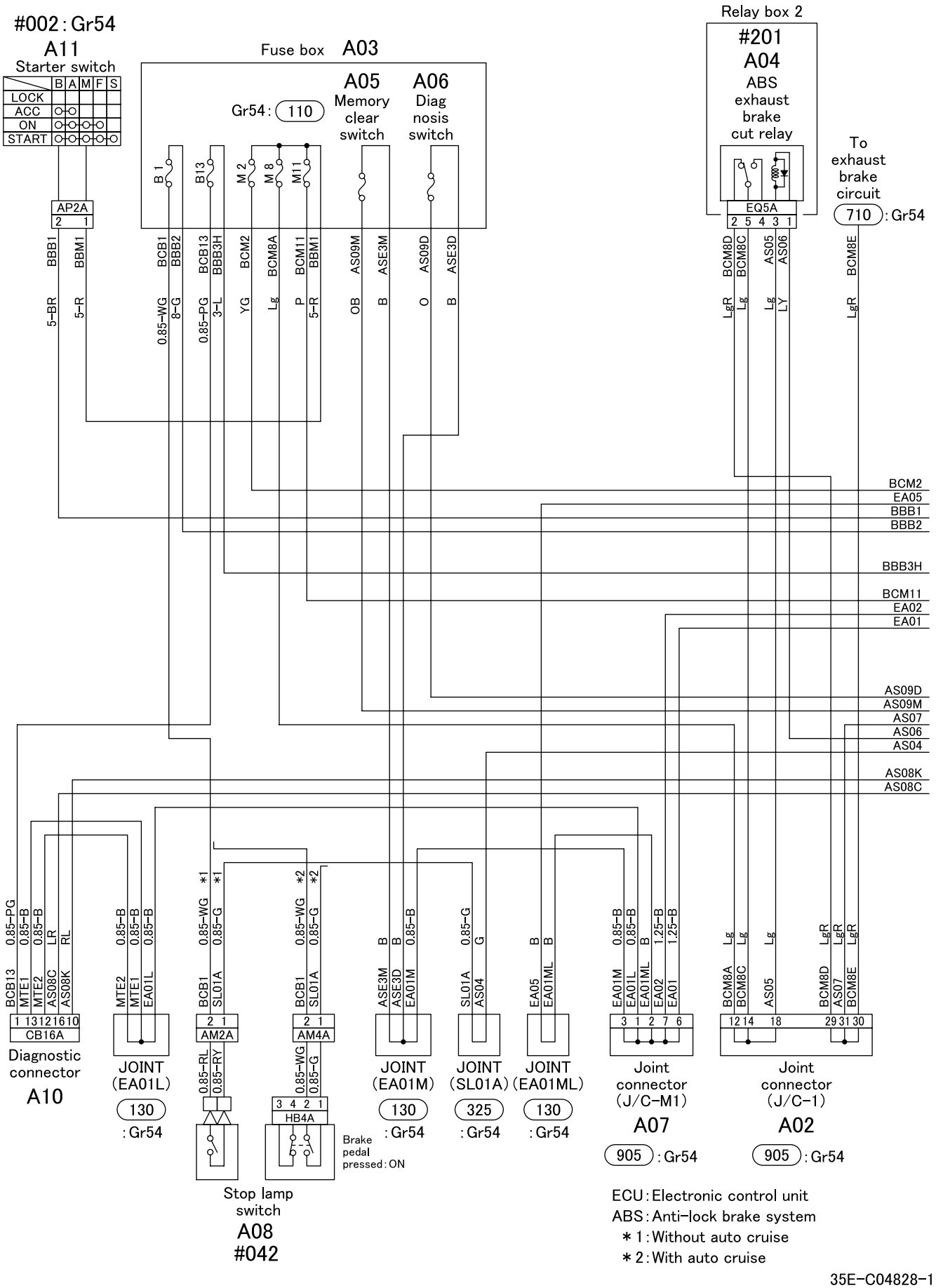

ECU : Electronic control unit
ABS : Anti-lock brake system
＊1 : Without auto cruise
＊2 : With auto cruise

35E-C04828-1

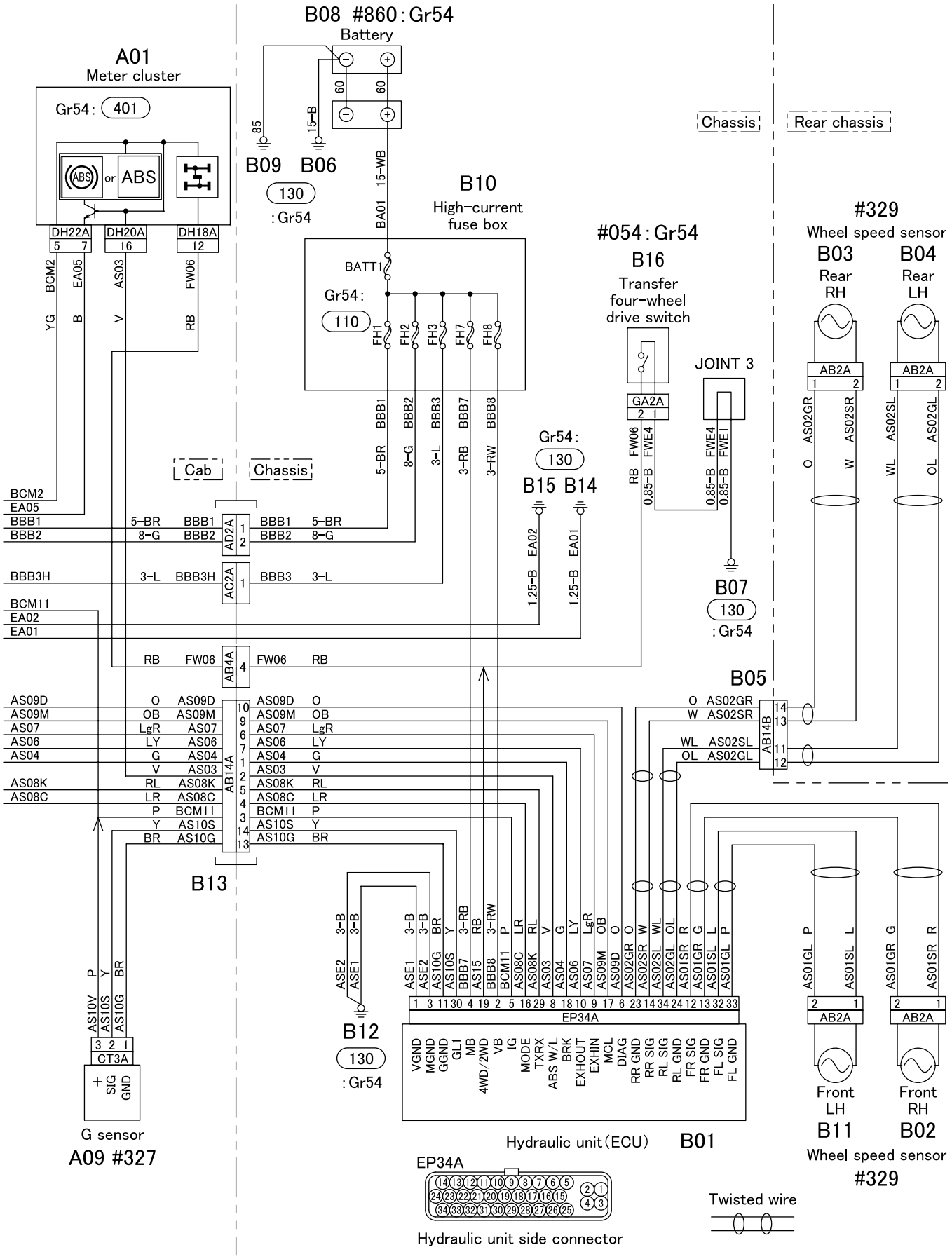
B08 #860 : Gr54
Battery
A01
Meter cluster
Gr54 : 401
ABS
or
ABS
DH22A
DH20A
DH18A
BCM2
EA05
AS03
FW06
YG
B
V
RB
85
15-B
60
60
B09
B06
130
: Gr54
15-WB
BA01
B10
High-current fuse box
BATT1
Gr54 :
110
FH1
FH2
FH3
FH7
FH8
BBB1
BBB2
BBB3
BBB7
BBB8
5-BR
8-G
3-L
3-RB
3-RW
Chassis
Rear chassis
#054 : Gr54
B16
Transfer four-wheel drive switch
GA2A
FW06
FWE4
RB
0.85-B
JOINT 3
FWE4
FWE1
0.85-B
0.85-B
B07
130
: Gr54
#329
Wheel speed sensor
B03
Rear RH
B04
Rear LH
AB2A
O
AS02GR
W
AS02SR
WL
AS02SL
OL
AS02GL
Gr54 :
130
B15 B14
EA02
EA01
1.25-B
1.25-B
Cab
Chassis
BCM2
EA05
BBB1
BBB2
BBB3H
BCM11
EA02
EA01
AD2A
AC2A
AB4A
RB
FW06
AS09D
AS09M
AS07
AS06
AS04
AS03
AS08K
AS08C
BCM11
AS10S
AS10G
AB14A
B13
B05
AB14B
B12
130
: Gr54
EP34A
ASE2
ASE1
AS10V
AS10S
AS10G
CT3A
SIG
GND
G sensor
A09 #327
VGND
MGND
GGND
GL1
MB
4WD/2WD
VB
IG
MODE
TXRX
ABS W/L
BRK
EXHOUT
EXHIN
MCL
DIAG
RR GND
RR SIG
RL SIG
RL GND
FR SIG
FR GND
FL SIG
FL GND
Hydraulic unit (ECU)
B01
EP34A
Hydraulic unit side connector
AS01GL
AS01SL
AS01GR
AS01SR
Front LH
Front RH
B11
B02
Wheel speed sensor
#329
Twisted wire

Group 36

Parking Brake

Table of Contents

Back

Home

MITSUBISHI FUSO TRUCK OF AMERICA, Inc.

Pub.No.TWSE0713-36

INDEX

SPECIFICATIONS 36-2

STRUCTURE AND OPERATION
1. Components and Parts 36-3
2. Parking Brake Lever 36-3
3. Parking Brake 36-4

TROUBLESHOOTING 36-5

ON-VEHICLE INSPECTION AND ADJUSTMENT
1. Adjustment of Parking Brake Shoe Clearance 36-6
2. Inspection and Adjustment of Parking Brake Lever 36-7

PARKING BRAKE CONTROL 36-10

PARKING BRAKE
<FE (MANUAL TRANSMISSION)> 36-14
<FE (AUTOMATIC TRANSMISSION)> 36-16
<FG> 36-18

SPECIFICATIONS

Item			Specifications		
			FE		FG
			Automatic transmission	Manual transmission	
Brake	Type		Internal expanding type acting on propeller shaft		
	Operation type		Mechanical cable type		
Parking brake	Type		Duo servo type		
	Brake drum I.D.	mm {in.}	ϕ190 {7.48}	ϕ203.2 {8.00}	ϕ180 {7.09}
	Lining width × thickness	mm {in.}	45 × 4.0 {1.77 × 0.16}	50 × 4.0 {1.97 × 0.16}	35 × 5 {1.38 × 0.20}

1. Components and Parts

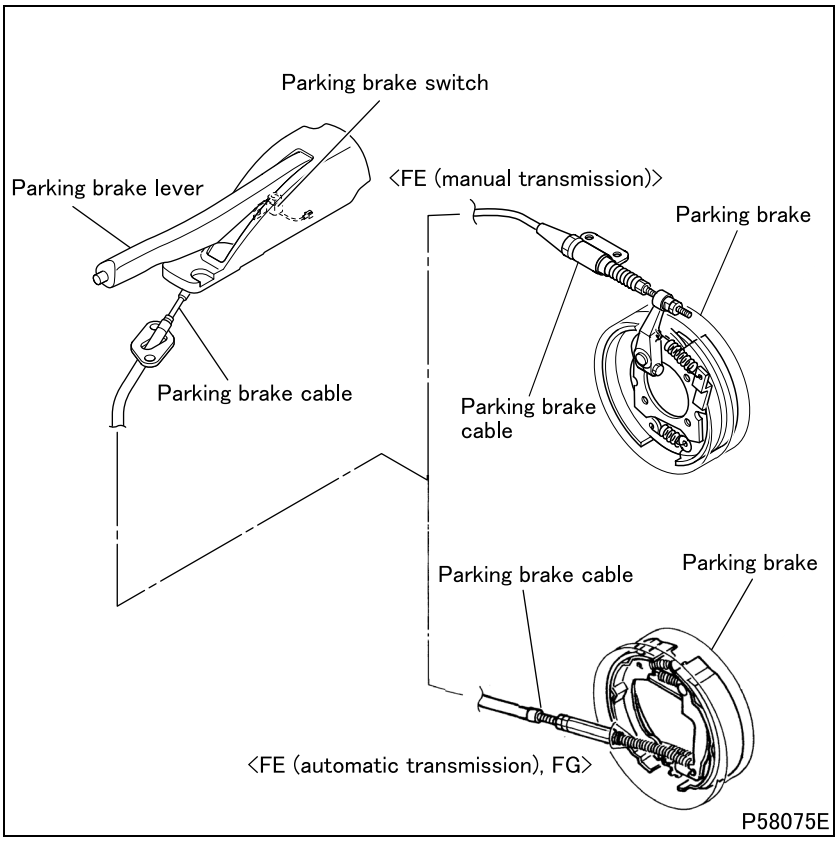

2. Parking Brake Lever

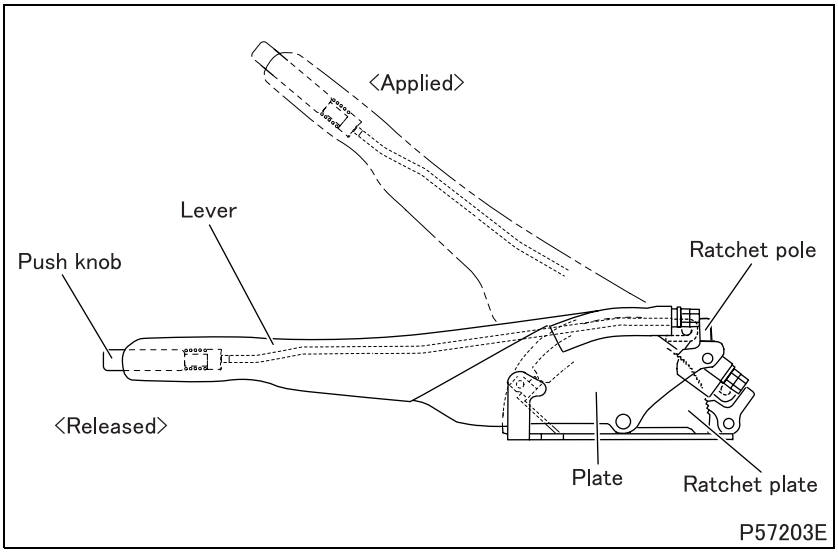

- Pulling the parking brake lever makes the parking brake work, at which point the ratchet pole engages with the ratchet plate and the lever is locked.
- To release the parking brake lever, slightly pull it up while pushing the release knob. This disengages the ratchet pole from the ratchet plate, allowing the parking brake lever to return to the released position.

3. Parking Brake

3.1 Duo servo type <FE (manual transmission)>

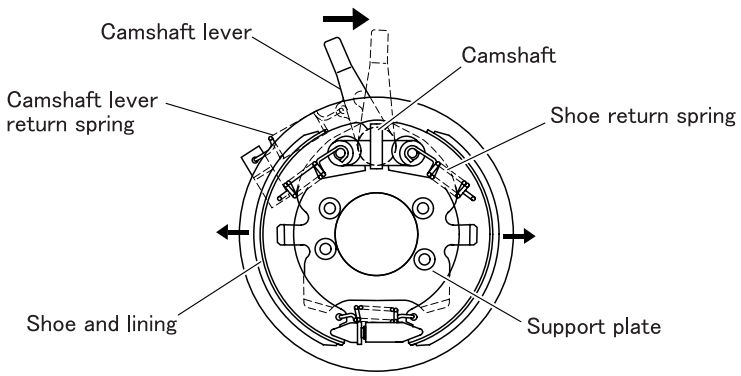

P56131E

- The camshaft lever, which is used to actuate the shoes/linings, is built into the parking brake unit. Pulling the parking brake lever actuates the camshaft lever via the parking brake cable.
- Actuation of the camshaft lever causes the camshaft to rotate, which expands both shoes/linings onto the brake drum. In this case, both shoes/drums function as a leading shoe.
- As the parking brake lever (camshaft lever) is released, the forces of shoe and camshaft lever return springs restore the components to their home positions. This releases the parking brake.

3.2 Duo servo type

<FE (automatic transmission)>

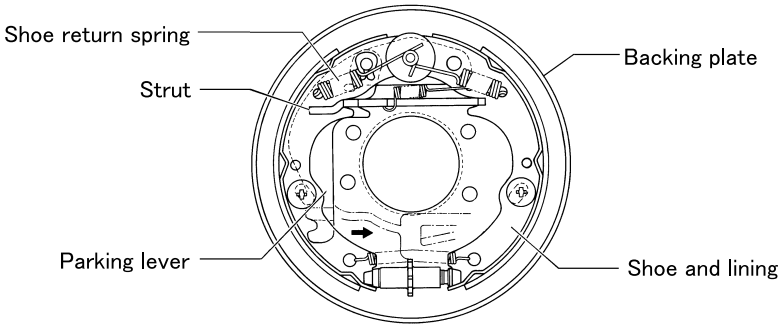

57228E

<FG>

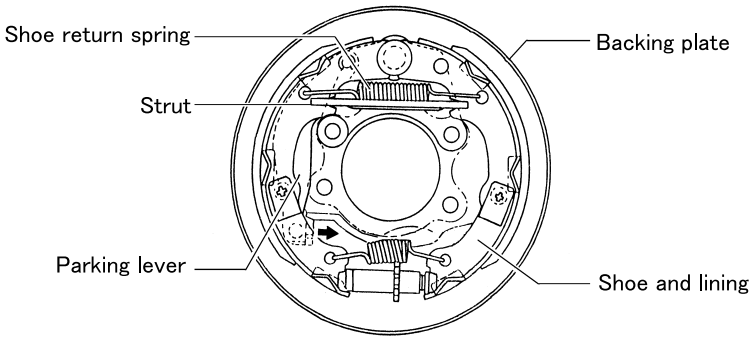

P58291E

- The parking lever that actuates the shoe and lining is a built-in component of the parking brake body. Pulling the parking brake lever pulls the parking brake cable, which in turn pulls the parking lever.
- When the parking lever is pulled, one shoe and lining is forced to expand with the medium of strut. At the same time, the parking lever directly expands the other shoe and lining. Thus, each shoe and lining assembly works as a leading shoe.
- When the parking brake lever (parking lever) is returned to the released position, the repercussive force of the shoe return spring releases the brake.

Possible causes / Symptoms		Parking brake does not work	Parking brake release not smooth (dragging)	Parking brake lever operating physical force insufficient	Parking brake lever operating physical force excessive	Reference Gr
Parking brake cable	Inner cable stretched or damaged	O	O	O	O	
	Inner cable improperly adjusted	O	O	O	O	
	Front parking cable and rear parking cable improperly connected	O	O	O	O	
	Front parking cable and rear parking cable joints in poor contact	O	O	O	O	
Parking brake lever	Ratchet pole and ratchet plate pawl engaged improperly	O				
	Pulling stroke insufficient		O		O	
	Pulling stroke excessive	O		O		
Parking brake	Shoe clearance insufficient		O		O	
	Shoe clearance excessive	O		O		
	Parking brake drum inner surface deformed or warped	O		O		
	Lining worn unevenly	O		O		
	Brake drum inner surface greasy or oily	O				
	Lining surface greasy or oily	O				
	Camshaft lever return spring fatigued or fractured <FE (manual transmission)>		O			
	Shoe return spring fatigued or fractured		O			

1. Adjustment of Parking Brake Shoe Clearance

Service standards (Unit: mm {in.})

Location	Maintenance item		Standard value	Limit	Remedy
–	Brake shoe clearance	FE (manual transmission)	0.1 to 0.25 {0.0039 to 0.0098}	–	Adjust
		FE (automatic transmission)	0.2 to 0.25 {0.0079 to 0.0098}	–	
		FG	0.25 to 0.3 {0.0098 to 0.012}	–	

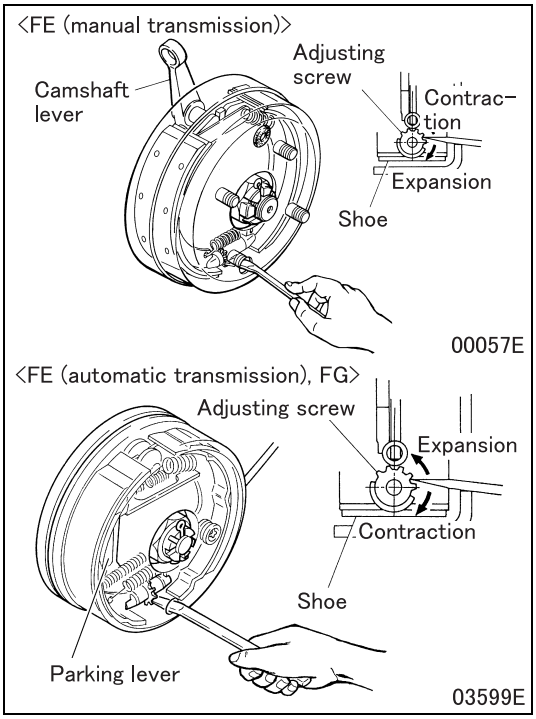

- Chock the front wheels and raise the rear wheels with a jack before adjusting the shoe clearance.
- Operate the parking brake lever to release the parking brake. (The parking lever or camshaft lever is released from locking.)
- Using a standard screwdriver inserted through the shoe adjusting hole in the parking brake drum, turn the adjusting screw in the C direction (expansion) shown to bring the shoe into close contact with the brake drum.
- Turn the adjusting screw 8 notches in the B direction (contraction) shown from the position where the shoe is in close contact with the drum. The shoe clearance should be adjusted to the standard value.

2. Inspection and Adjustment of Parking Brake Lever

Service standards

Location	Maintenance item	Standard value	Limit	Remedy
–	Parking brake lever pulling stroke (with operating physical operating of 300N {67 lbs, 31 kgf})	7 to 9 notches	–	Adjust or inspect

Tightening torque (Unit: N·m {ft.lbs, kgf·m})

Mark	Parts to be tightened	Tightening torque	Remarks
–	Lock nut <FE (automatic transmission), FG>	18.7 to 27.5 {14 to 20, 1.9 to 2.8}	–

Lubricant and/or sealant

Mark	Point of application	Specified lubricant and/or sealant	Quantity
–	Camshaft lever (on sliding face with parking brake cable and on contact face with ball bushing) <FE (manual transmission)>	Chassis grease [NLGI No. 1 (Li soap)]	As required

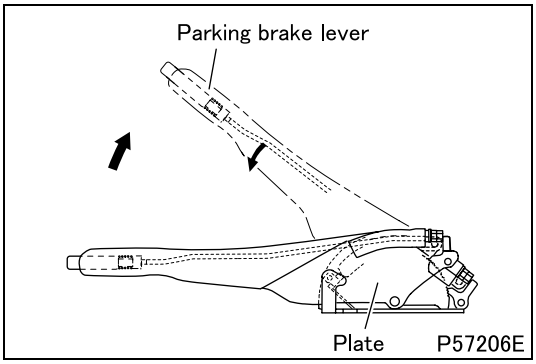

[Inspection]

- Pull the parking brake lever from the released position with an operating physical force of 300N {67 lbs, 31 kgf} and count the number of cleared notches.
- If the count of notches deviates from the specified range of standard values, adjust the length of the parking brake cable.
- If the count of notches (pulling stroke) is still out of the specified range after cable length adjustment, check the parking brake shoe clearance.

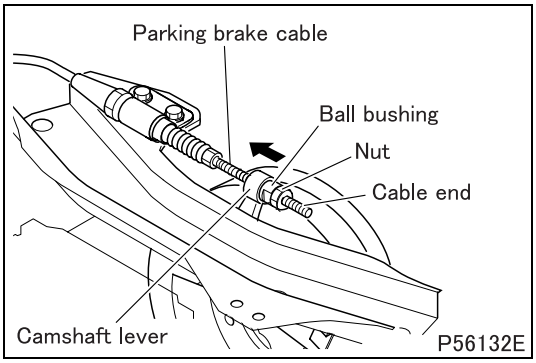

[Adjustment]

<FE (manual transmission)>

- Pull on the parking brake cable end with a force of 100 N {22 lbs, 10 kgf} to remove any slack from the cable.
- Apply grease onto the camshaft lever, on the sliding face with the parking brake cable and on the contact face with the ball bushing.
- While pulling the cable end of the camshaft lever in the direction of the arrow with a force of 45 to 50 N {10 to 11 lbs, 4.6 to 5.1 kgf}, rotate the ball bushing until it contacts the cable end of the camshaft lever.

CAUTION ⚠

- **Do not rotate the ball bushing so much as to cause the camshaft lever to move.**

- Pull the parking brake lever 3 times with a force of 500 N {110 lbs, 51 kgf}.
- This operation causes the cable to extend. Rotate the ball bushing again until it contacts the camshaft lever. Then, pull the parking brake lever with a force of 45 to 50 N {10 to 11 lbs, 4.6 to 5.1 kgf}. The camshaft lever should not move more than 1mm {0.039 in.}.

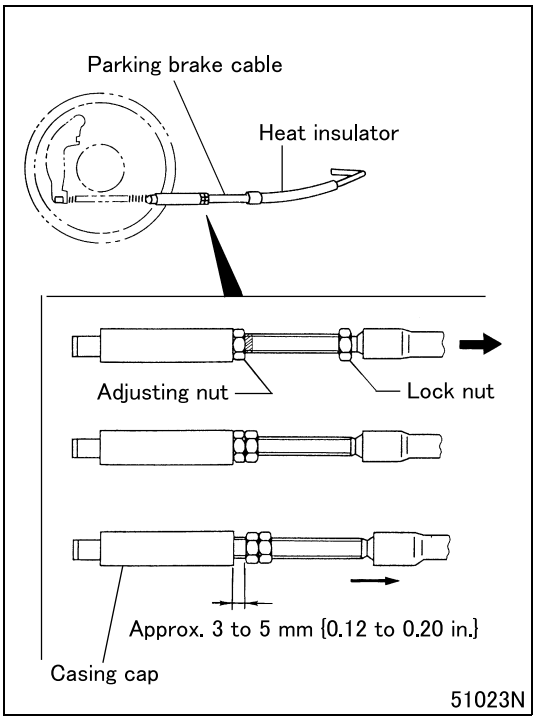

- Pull the parking brake lever from the released position with a force of 300 N {67 lbs, 31 kgf}. The lever should travel past the specified number of notches. Tighten the nut.

<FE (automatic transmission), FG>

- Pull the outer cable of the parking brake cable with a force of 60 to 100 N {13 to 22 lbs, 6.1 to 10 kgf} to zero the parking brake shoe clearance.

CAUTION ⚠

- **When pulling the outer cable, take care not to move heat insulator on the parking brake cable out of place.**

- While pulling the parking brake cable, tighten the adjust nut until it seats the cable support end.
- Lock the adjust nut with the lock nut.
- Operate the parking brake lever several times with the force of 500 N {110 lbs, 51 kgf}.
- Pull the outer cable of the rear parking brake cable again with the force of 60 to 100 N {13 to 22 lbs, 6.1 to 10 kgf}.

CAUTION ⚠

- **When pulling the outer cable, take care not to move heat insulator on the parking brake cable out of place.**

- Holding the parking brake cable in the pulled state, turn the adjusting nut until its distance from the casing cap becomes 3 to 5 mm {0.12 to 0.20 in.} as shown in the illustration.
- Return the parking brake cable to the original position.
- Tighten the lock nut to the specified torque.

M E M O

PARKING BRAKE CONTROL

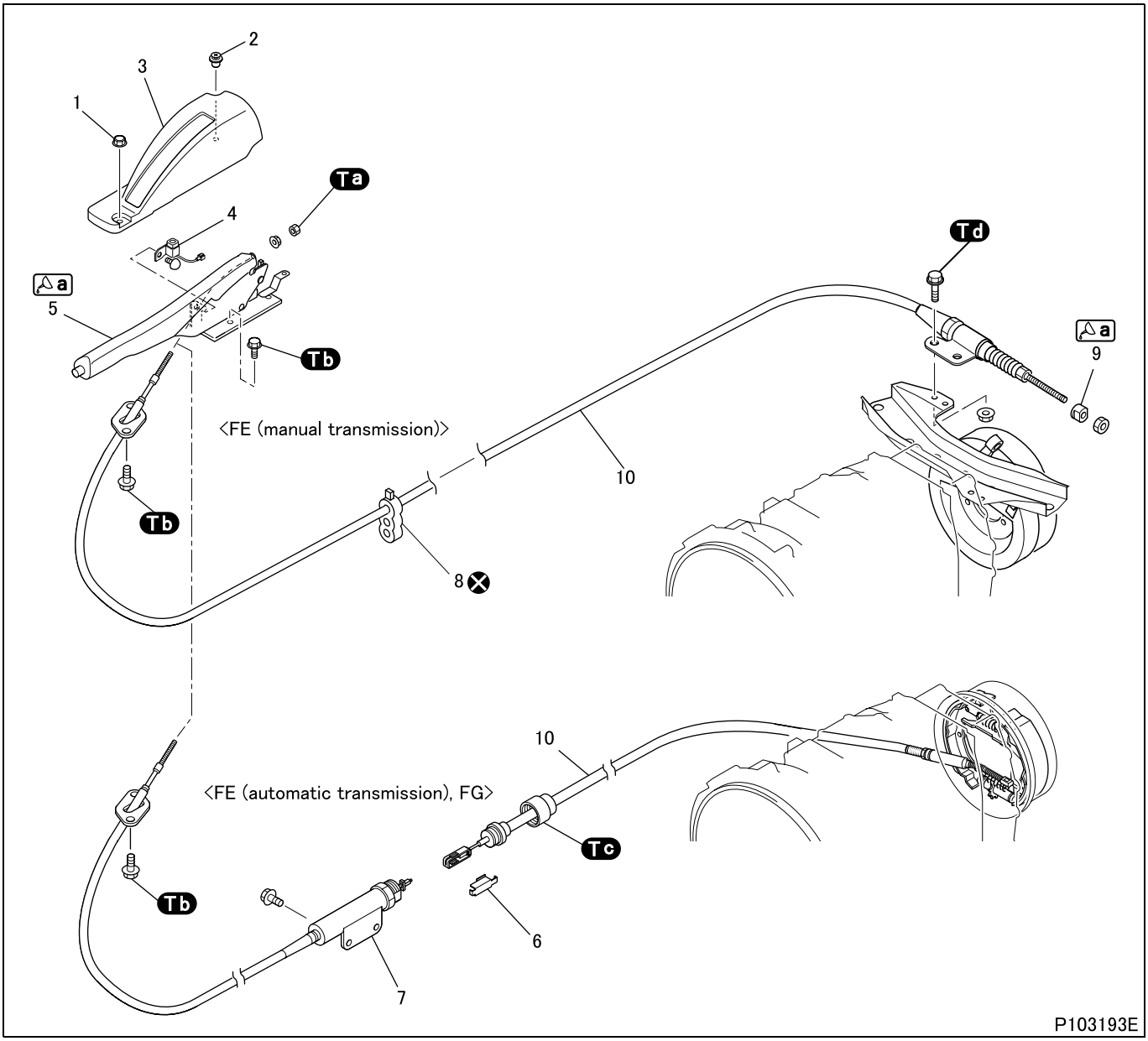

● **Removal sequence**

1 Push nut
2 Push turn rivet
3 Cover
4 Parking brake switch
5 Parking brake lever
6 Cap <FE (automatic transmission), FG>
7 Front parking brake cable <FE (automatic transmission), FG>
8 Clip <FE (manual transmission)>
9 Ball bushing <FE (manual transmission)>
10 Parking brake cable <FE (manual transmission)> Rear parking brake cable <FE (automatic transmission), FG>

⊗: Non-reusable parts

● **Installation sequence**

Follow the removal sequence in reverse.

CAUTION ⚠

- **Perform the adjustment of the parking brake lever after installation. (See ON-VEHICLE INSPECTION AND ADJUSTMENT.)**

Tightening torque (Unit: N·m {ft.lbs, kgf·m})

Mark	Parts to be tightened	Tightening torque	Remarks
Ta	Nut (parking brake cable attaching)	4 to 6 {3.0 to 4.4, 0.4 to 0.6}	–
Tb	Bolt (parking brake lever mounting)	12 to 15 {8.9 to 11, 1.2 to 1.5}	–
	Bolt (parking brake cable attaching)		
Tc	Rear parking brake cable to front parking brake cable connection <FE (automatic transmission), FG>	62.5 ± 7.5 {46 ± 5.5, 6.4 ± 0.8}	–
Td	Bolt (parking brake cable attaching) <FE (manual transmission)>	19 to 28 {14 to 21, 1.9 to 2.9}	–

Lubricant and/or sealant

Mark	Point of application	Specified lubricant and/or sealant	Quantity
a	Contact surfaces of parking brake lever	Chassis grease [NLGI No. 1 (Li soap)]	As required
	Spherical face of ball bushing <FE (manual transmission)>		

◆Removal procedure◆

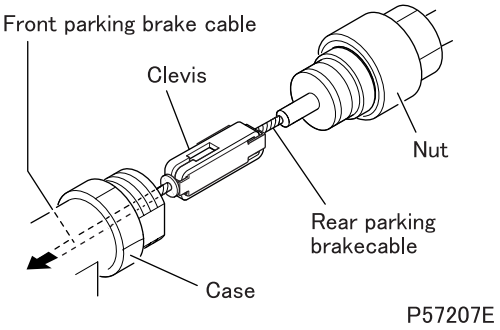

P57207E

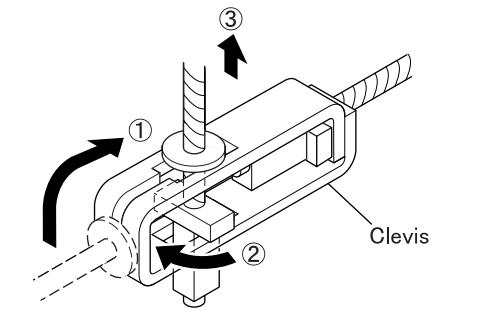

P50252E

■ **Removal: Front parking brake cable <FE (automatic transmission), FG>**

- Loosen the nut connecting the front and rear parking brake cables, then separate the front parking brake cable case from the rear parking brake cable.
- Remove the cap and pull out the clevis from the front parking brake cable case and remove it at the steps of 1, 2 and 3 in that order as shown.

◆Installation procedure◆

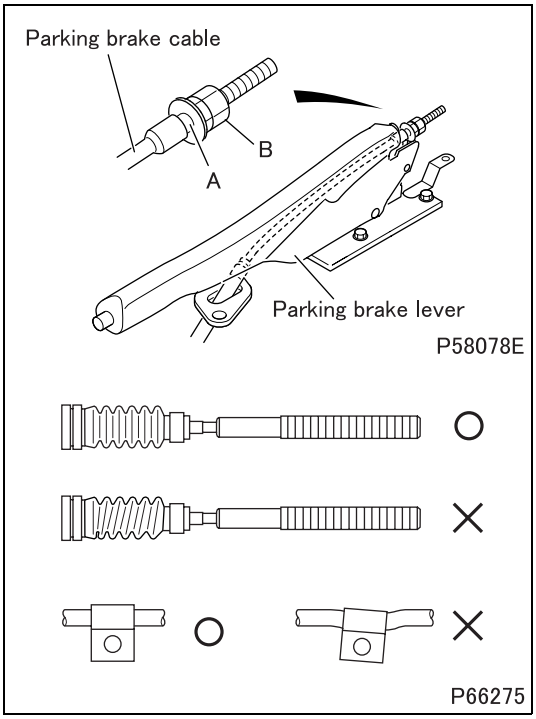

■ **Installation: Front parking brake cable or parking brake cable**

- Connect the front parking brake cable to the rear parking brake cable by following the removal procedure in reverse. <FE (automatic transmission), FG>
- Attach the parking brake cable to the parking brake lever by fully tightening nut A, then tightening nut B to the specified torque.

CAUTION ⚠

- **Cable bending radius must be at least 100 mm.**
- **The cable must not be bent at clamped portions.**
- **There must not be torsion in the boot.**
- **Avoid any interference with other components when routing the cable.**

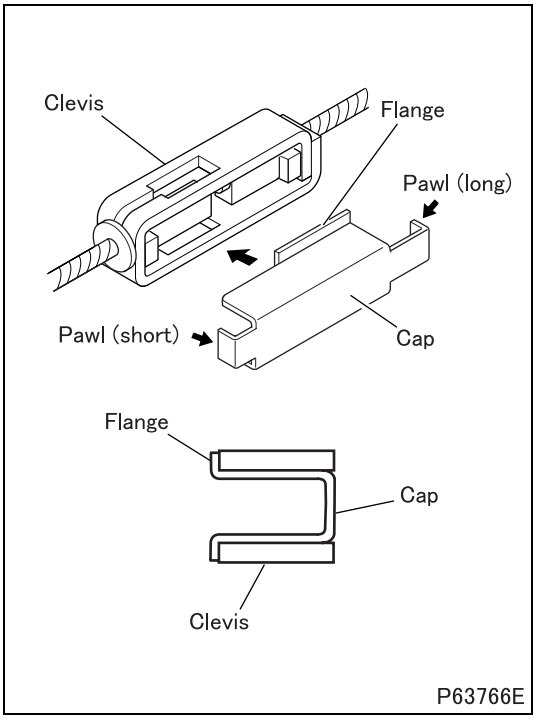

■ **Installation: Cap <FE (automatic transmission), FG>**

- Attach the cap to the clevis of the rear parking brake cable from the direction shown in the illustration.
- Fit the cap into the clevis all the way so that the flange of the cap comes out at the other side of the clevis.

M E M O

PARKING BRAKE <FE (MANUAL TRANSMISSION)>

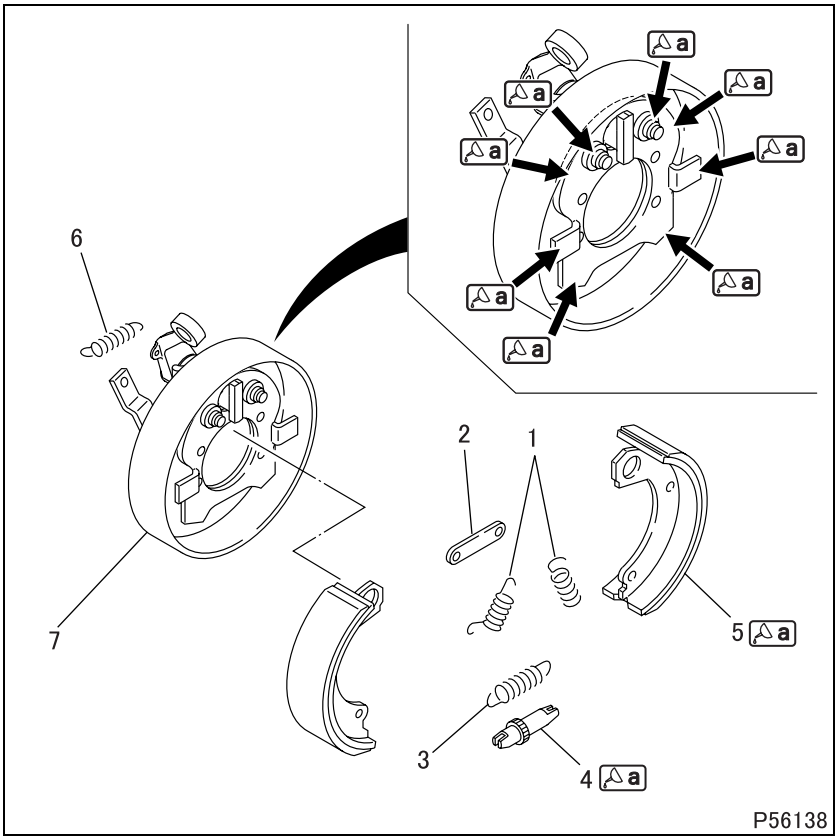

● **Disassembly sequence**

1 Shoe return spring
2 Anchor pin brace
3 Adjust wheel return spring
4 Adjust screw
5 Shoe & lining
6 Camshaft lever return spring
7 Support plate & dust cover

● **Assembly sequence**

Follow the disassembly sequence in reverse.

CAUTION ⚠

- **To prevent poor working of the brake, do not smear the surface of shoe and lining with grease or oil.**
- **When the shoe and lining has been replaced with a new one, always check it for contact with the parking brake drum.**

- See Gr22 for parking brake removal and installation procedures.

Service standards (Unit: mm {in.})

Location	Maintenance item	Standard value	Limit	Remedy
1	Shoe return spring installed load (installed length: 57.5 {2.26})	145 ± 15 N {33 ± 3.3 lbs, 15 ± 1.5 kgf}	115 N {26 lbs, 12 kgf}	Replace
3	Adjust wheel return spring installed load (installed length: 59 {2.32})	78 ± 7.8 N {18 ± 1.8 lbs, 8 ± 0.8 kgf}	63 N {14 lbs, 6.4 kgf}	Replace
5	Brake lining thickness	4.0 {0.16}	1.4 {0.055}	Replace
6	Cam shaft lever return spring installed load (installed length: 85 {3.35})	62 ± 5.9 N {14 ± 1.3 lbs, 6.3 ± 0.6 kgf}	49 N {11 lbs, 5.0 kgf}	Replace

Lubricant and/or sealant

Mark	Point of application	Specified lubricant and/or sealant	Quantity
a	Adjust screw ends' contact faces with shoe & lining	Brake grease (AKB100)	As required
	Contact faces between support plate, camshaft and shoe & lining		
	Contact faces between support plate, anchor pin and shoe & lining		

◆Inspection procedure◆

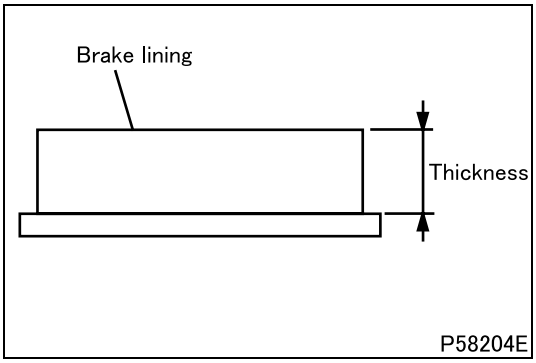

■ **Inspection: Brake lining thickness of shoe and lining**

- If the measured value is lower than the limit, replace the shoe and lining.

PARKING BRAKE <FE (AUTOMATIC TRANSMISSION)>

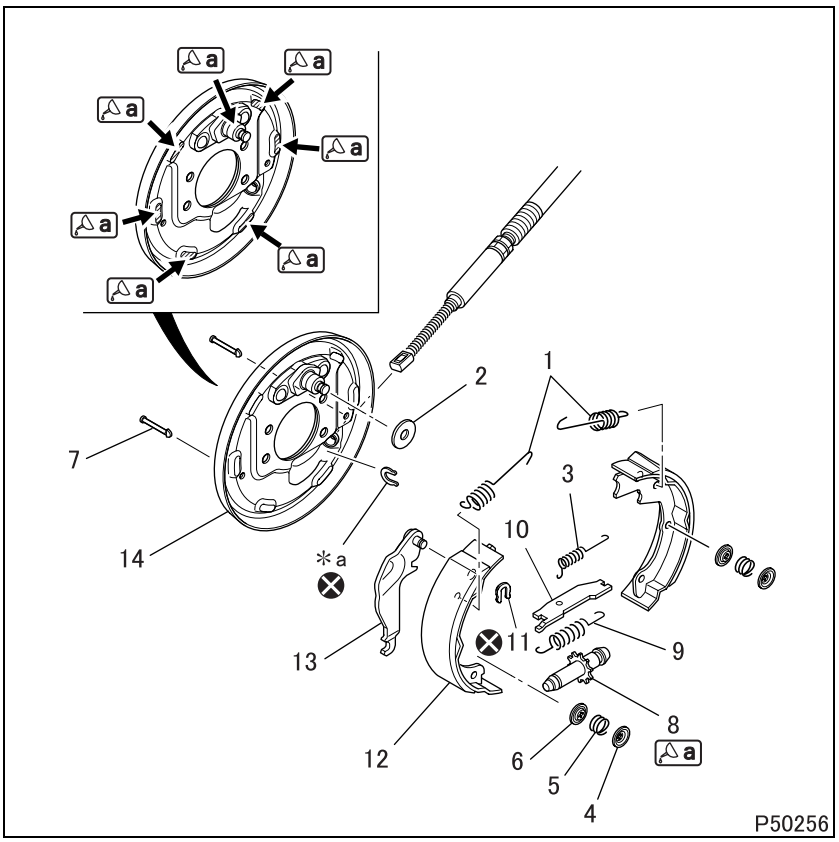

● **Disassembly sequence**

1 Shoe return spring
2 Washer
3 Strut spring
4 Shoe holddown cup
5 Shoe holddown spring
6 Shoe holddown cup
7 Shoe holddown pin
8 Adjuster
9 Adjuster spring
10 Strut
11 Retainer
12 Shoe and lining
13 Parking lever
14 Backing plate

***a**: Retainer
⊗: Non-reusable parts

● **Assembly sequence**

Follow the disassembly sequence in reverse.

CAUTION ⚠

- **To prevent poor working of the brake, do not smear the surface of shoe and lining with grease or oil.**
- **When the shoe and lining has been replaced with a new one, always check it for contact with the parking brake drum.**

NOTE

- **See Gr23 for parking brake removal and installation procedures.**

Service standards (Unit: mm {in.})

Location	Maintenance item	Standard value	Limit	Remedy
1	Installed load of shoe return spring (installed length: 67.1 {2.64})	58.8 ± 5.9 N {13 ± 1.3 lbs, 6.0 ± 0.6 kgf}	49 N {11 lbs, 5.0 kgf}	Replace
3	Installed load of strut spring (installed length: 49 {1.93})	29.4 ± 2.9 N {6.6 ± 0.7 lbs, 3.0 ± 0.3 kgf}	26 N {5.8 lbs, 2.7 kgf}	Replace
5	Installed load of shoe holddown spring (installed length: 15.5 {0.61})	78.5 ± 7.9 N {18 ± 1.8 lbs, 8.0 ± 0.8 kgf}	71 N {16 lbs, 7.2 kgf}	Replace
9	Installed load of adjuster spring (installed length: 78.2 {3.08})	58.8 ± 5.9 N {13 ± 1.3 lbs, 6.0 ± 0.6 kgf}	49 N {11 lbs, 5.0 kgf}	Replace
12	Brake lining thickness of shoe and lining	4.0 {0.16}	1.4 {0.053}	Replace

Lubricant and/or sealant

Mark	Points of application	Specified lubricant and/or sealant	Quantity
a	Adjuster ends in contact with shoe and lining	Brake grease (AKB100)	As required
	Backing plate anchor pin and surface in contact with shoe and lining		

◆Inspection procedure◆

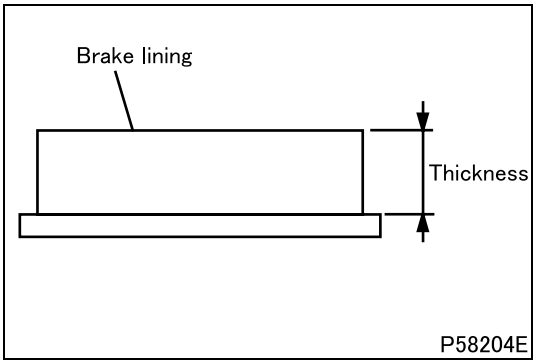

■ **Inspection: Brake lining thickness of shoe and lining**

- If the measured value is lower than the limit, replace the shoe and lining.

PARKING BRAKE <FG>

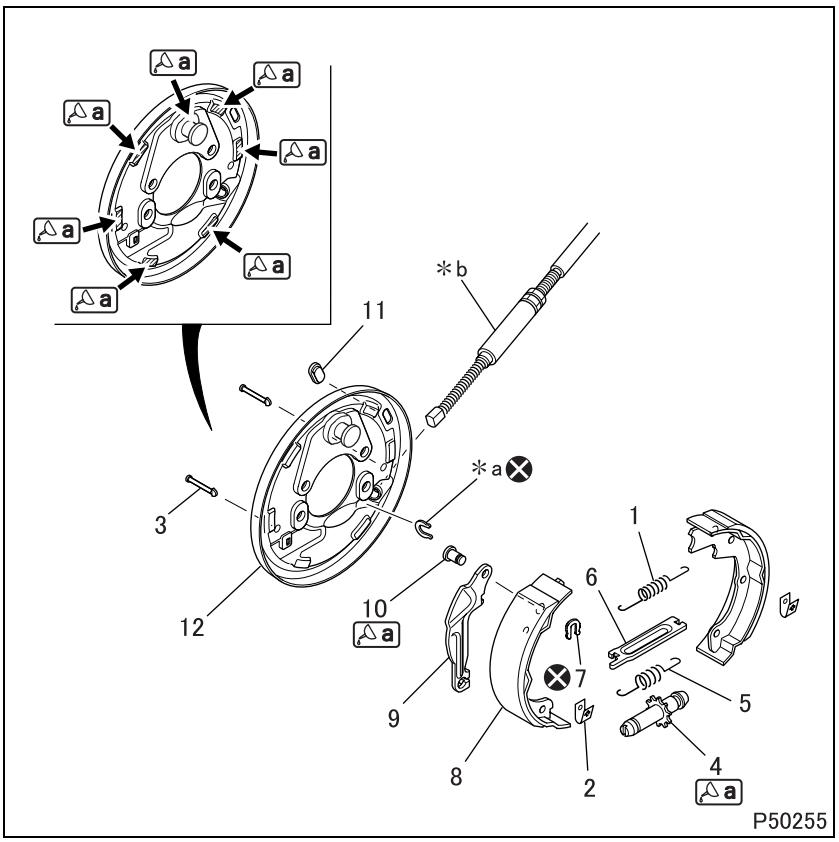

●Disassembly sequence

1 Shoe return spring
2 Shoe holddown spring
3 Shoe holddown pin
4 Adjuster
5 Adjuster spring
6 Strut
7 Retainer
8 Shoe & lining
9 Parking lever
10 Brake lever pin
11 Plug
12 Backing plate

***a**: Retainer
***b**: Rear parking brake cable
⊗: Non-reusable parts

●Assembly sequence

Follow the disassembly sequence in reverse.

CAUTION ⚠

- **To ensure efficient braking performance, keep the shoe & lining faces free from lubricant.**
- **When a new shoe & lining is installed, check and adjust the clearance between the brake shoe and the brake drum.**

NOTE

- **See Gr24 for parking brake removal and installation procedures.**

Service standards (Unit: mm {in.})

Location	Maintenance item	Standard value	Limit	Remedy
1	Shoe return spring installed load (installed length: 109.4 {4.31})	145 ± 15 N {32 ± 3.3 lbs, 14.6 ± 1.5 kgf}	115 N {26 lbs, 11.7 kgf}	Replace
5	Adjuster spring installed load (installed length: 72 {2.83})	50 ± 7.8 N {11 ± 1.8 lbs, 5.1 ± 0.8 kgf}	40 N {9.0 lbs, 4.1 kgf}	Replace
8	Brake lining thickness	5.3 {0.21}	3.0 {0.12}	Replace

Lubricant and/or sealant

Mark	Points of application	Specified lubricant and/or sealant	Quantity
a	Adjuster ends' contact faces with shoe & lining	Brake grease (AKB100)	As required
	Brake lever pin contact face		
	Backing plate contact faces with anchor pins and shoe & lining		

◆Inspection procedure◆

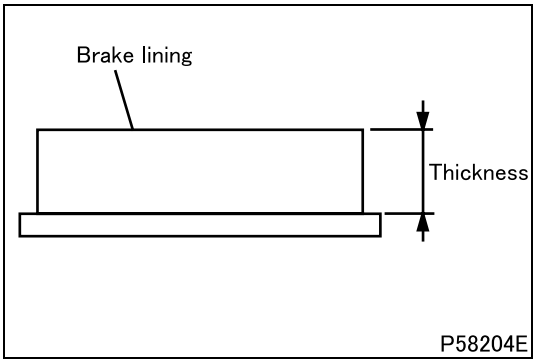

■ **Inspection: Brake lining thickness of shoe and lining**

- If the measured value is lower than the limit, replace the shoe and lining.

Group 37

Steering

Table of Contents

Back

Home

MITSUBISHI FUSO TRUCK OF AMERICA, Inc.

Pub.No.TWSE0713-37

INDEX

SPECIFICATIONS 37-2

STRUCTURE AND OPERATION
1. Steering System 37-4
2. Oil Flow 37-4
3. Power Steering Gear (Backlash Compensation Mechanism) 37-5
4. Power Steering Oil Pump <KYB Product> 37-6
5. Power Steering Oil Pump <Unisia JKC Steering Systems Product> 37-8

TROUBLESHOOTING 37-10

ON-VEHICLE INSPECTION AND ADJUSTMENT
1. Change of Power Steering Fluid 37-12
2. Bleeding of Power Steering System 37-13
3. Performance Verification Test of Power Steering System 37-14
4. Steering Wheel Play 37-15
5. Steering Column Looseness 37-15
6. Inspection of Drag Link Ball Joint 37-15

STEERING COLUMN 37-16

POWER STEERING GEAR ASSEMBLY AND DRAG LINK 37-26

POWER STEERING OIL PUMP
<KYB Product> 37-44
<UNISIA JKC STEERING SYSTEMS Product> 37-48

POWER STEERING OIL TANK 37-52

SPECIFICATIONS

Steering wheel, steering shaft and power steering gear

Item			Specifications	
			FG	FE
Steering wheel	Type		2-spoke type	
	Outer diameter	mm {in.}	400 {15.7}	
Steering shaft	Type		Universal joint type (tilt and telescopic type)	
Power steering gear assembly	Manufacturer		Unisia JKC Steering Systems	
	Type		Ball nut type	
	Form		Integral form	
	Item number		448-00301	448-00203
	Gear ratio		22.2	22.7
	Cylinder diameter	mm {in.}	80 {3.15}	85 {3.35}

Power steering oil pump

Item	Specifications	
	FE <Except FE85>, FG	FE85
Manufacturer	Unisia JKC Steering Systems	KYB
Type	Vane type	
Manufacturer's item number	478-04306	B4220-14002
Delivery rate cm^3 {cu.in.}/rev.	9.6 {0.59}	13.6 {0.83}
Adjusted flow volume L {qts.}/min.	6 to 8 {6.3 to 8.5}	11 to 13 {12 to 14}
Adjusted pressure (relief valve) MPa {psi, kgf/cm^2}	$10.8\ ^{+0.20}_{-0.49}$ {$1560\ ^{+29}_{-71}$, $110\ ^{+2}_{-5}$}	$12.3\ ^{0}_{-0.49}$ {$1780\ ^{0}_{-71}$, $125\ ^{0}_{5.0}$}
Permissible revolutions rpm	600 to 6500	

M E M O

1. Steering System

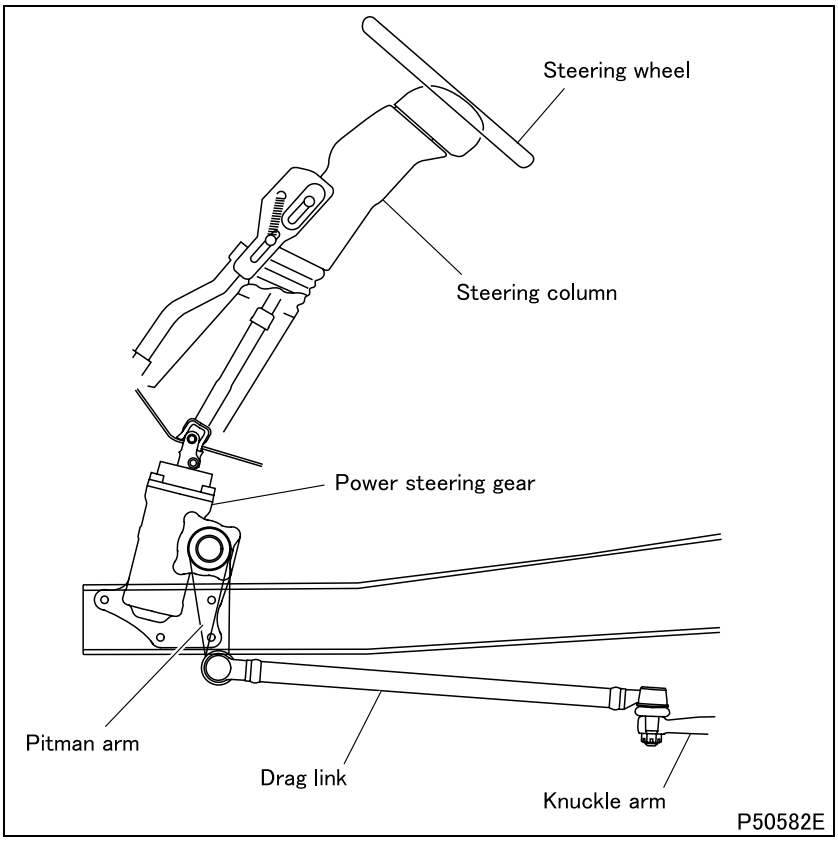

2. Oil Flow

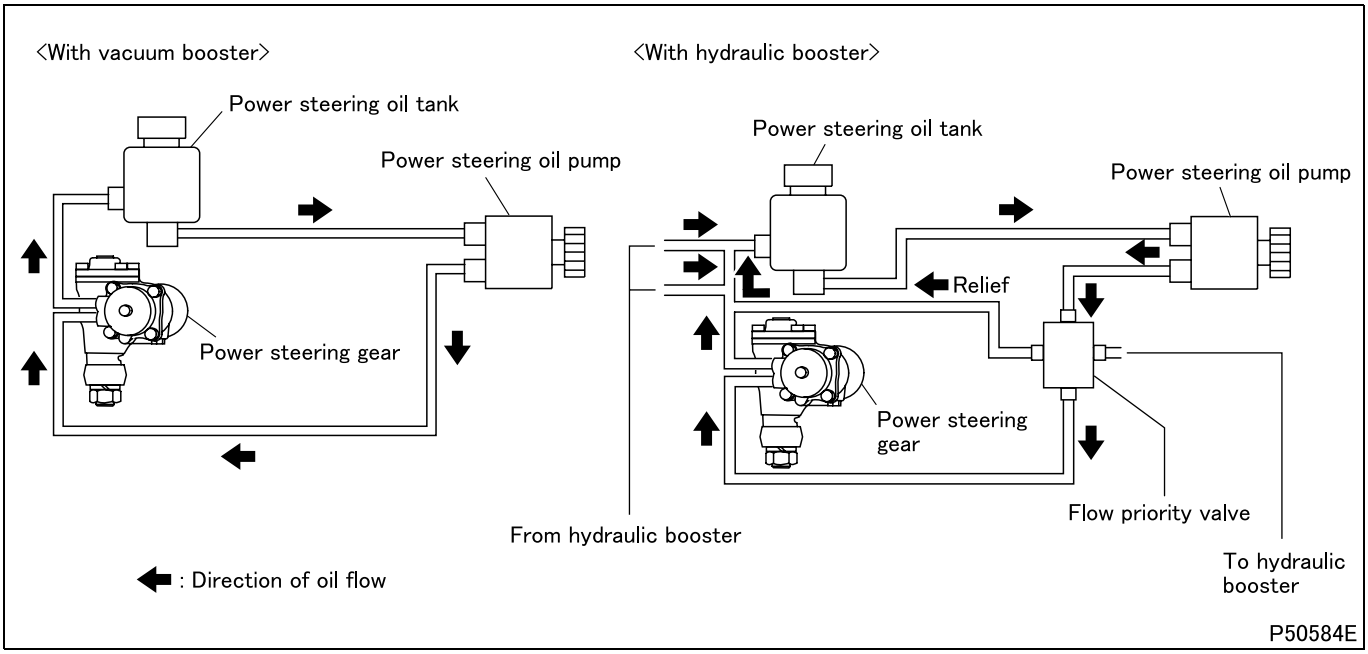

- The power steering system with hydraulic booster is provided with a flow priority valve to reduce steering shock that occurs when the brakes are suddenly applied during steering wheel manipulation.

3. Power Steering Gear (Backlash Compensation Mechanism)

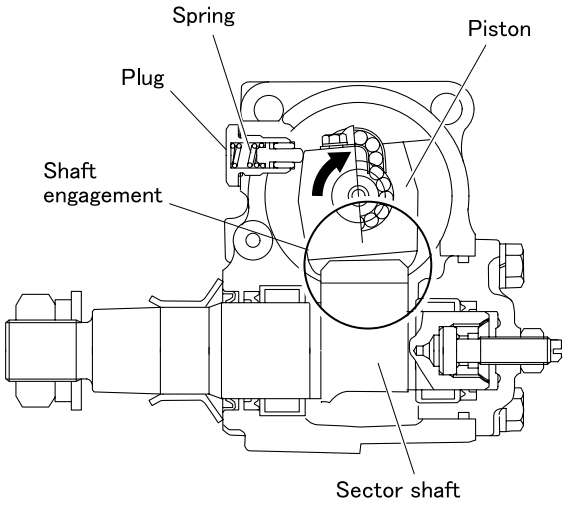

P67496E

- The plug constantly presses the piston in the illustrated turning direction with the force of internal spring.
- This eliminates play between the piston and sector shaft where they are engaged to suppress backlash during straight travel, thus improving steerability.

4. Power Steering Oil Pump <KYB Product>

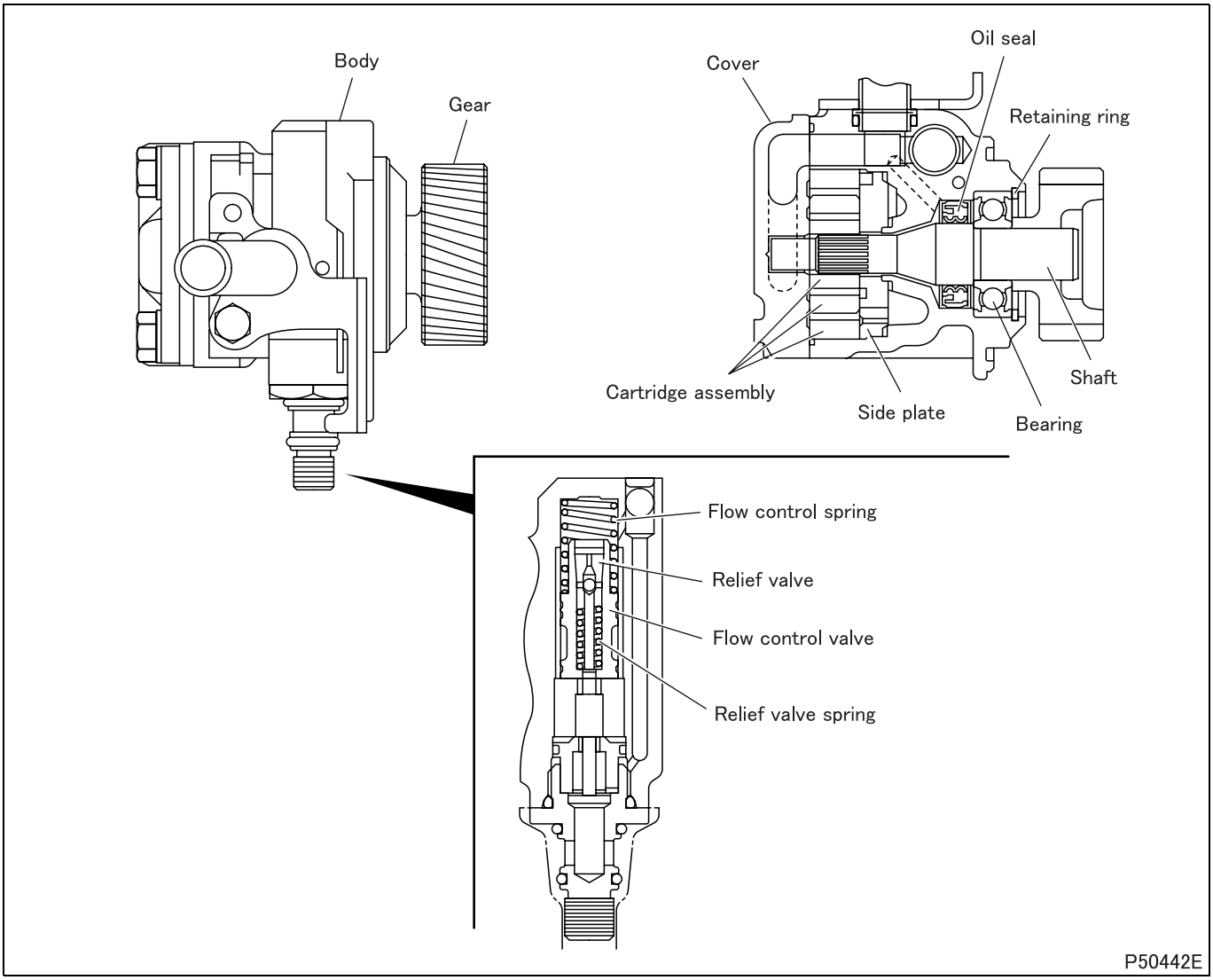

- The power steering oil pump is a hydraulic source pump with the vane in the rotor groove and is geared to the engine.
- The power steering oil pump consists of a cartridge assembly that discharges oil, a flow control valve that controls the oil flow rate and a relief valve that prevents free oil pressure rise.
- The flow control valve maintains constant the quantity of oil to the power steering gear during steering wheel manipulation.
  The relief valve is provided in the flow control valve to prevent oil pump pressure from rising beyond necessary level during stationary swing operation.

4.1 Flow control valve

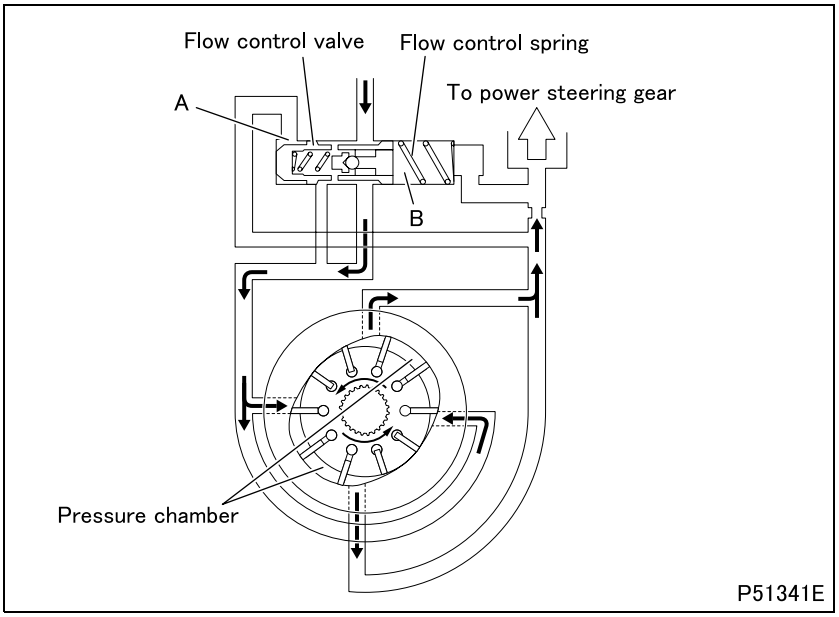

(1) Operation of flow control valve

(1.1) When not functioning (oil pump in operation at low speed)

- Oil pressure in the chamber A is weaker than the combined force of oil pressure in the chamber B and tension of the flow control spring, and the flow control valve remains stationary.

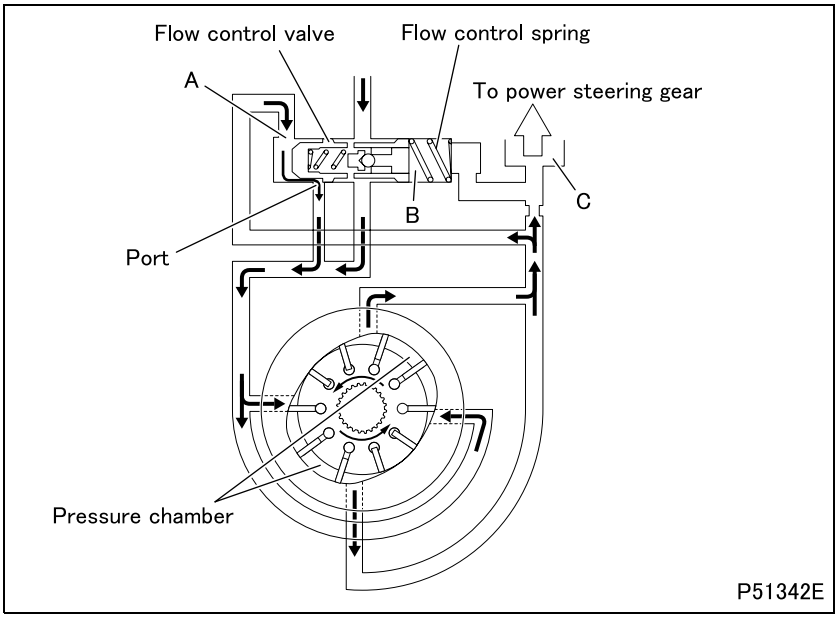

(1.2) When functioning (oil pump in operation at middle to high speeds)

- Oil pressure in the chamber A overcomes the combined force of oil pressure in the chamber B and tension of the flow control spring, and the flow control valve is shifted.
- Port is made open to release oil pressure, and the flow rate from the chamber C is maintained constant.

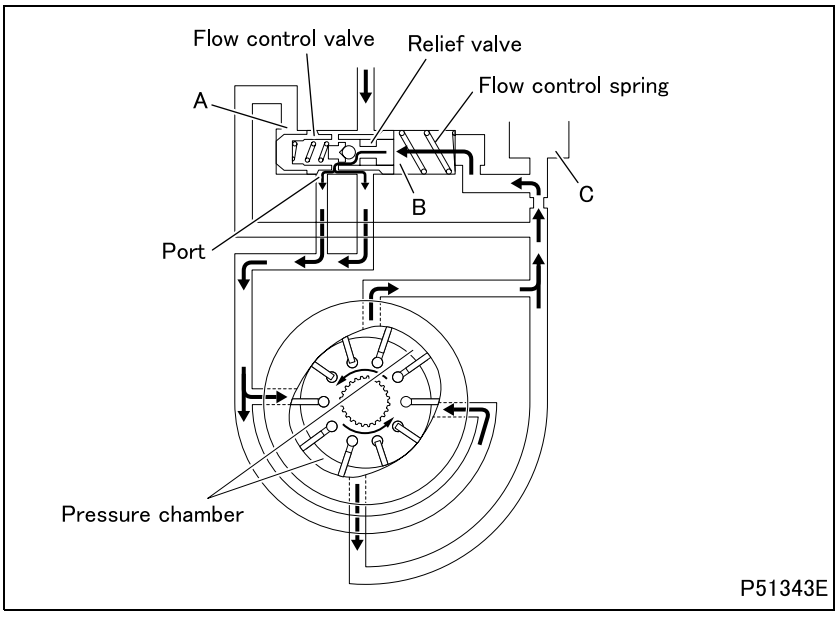

(2) Operation of relief valve

- When the combined force of oil pressure in the chamber B and tension of the flow control spring overcomes oil pressure in the chamber A, the flow control valve is shifted. Further increased oil pressure in the chamber B pushes the relief valve to open port, thus preventing excessive oil pressure from going to the chamber C.

5. Power Steering Oil Pump <Unisia JKC Steering Systems Product>

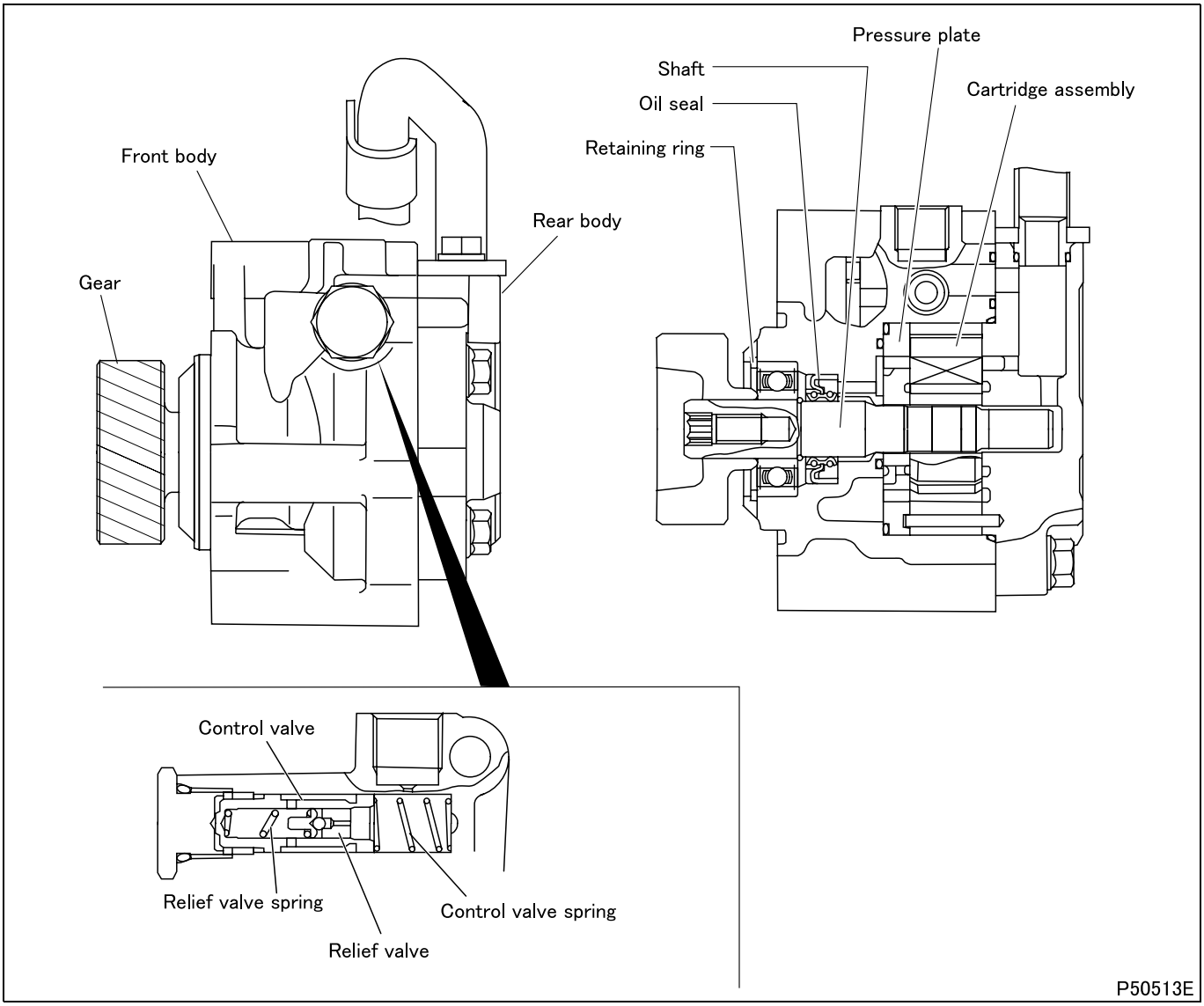

- The power steering oil pump is a hydraulic source pump with the vane in the rotor groove and is geared to the engine.
- The power steering oil pump consists of a cartridge assembly that discharges oil, a control valve that control the oil flow rate and a relief valve that prevents free oil pressure rise.
- The control valve maintains constant the quantity of oil to the power steering gear during steering wheel manipulation. The relief valve is provided in the control valve to prevent oil pump pressure from rising beyond necessary level during stationary swing operation.

5.1 Control valve

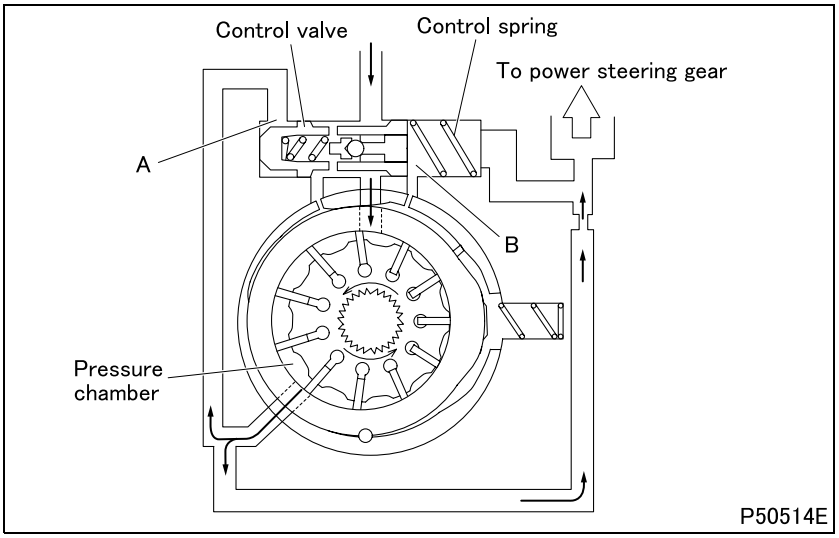

(1) Operation of control valve

(1.1) When not functioning (oil pump in operation at low speed)

- Oil pressure in the chamber A is weaker than the combined force of oil pressure in the chamber B and tension of the control spring, and the control valve remains stationary.

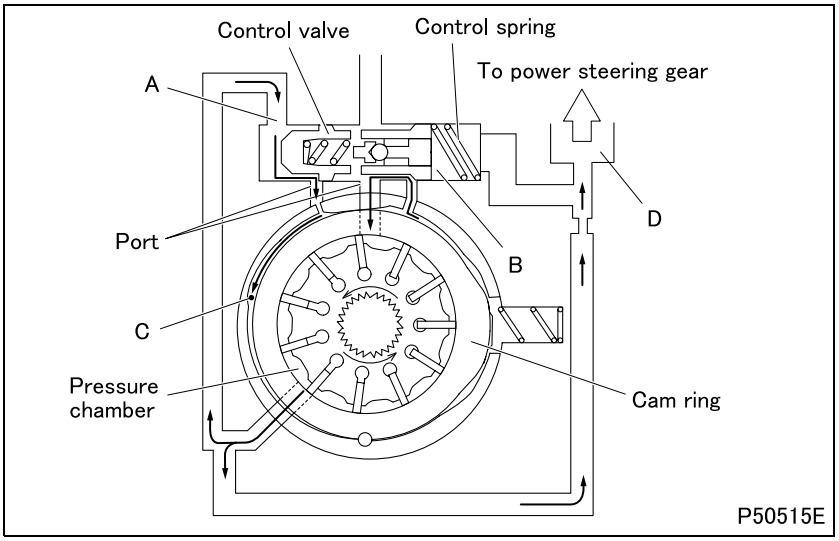

(1.2) When functioning (oil pump in operation at medium to high speeds)

- Oil pressure in the chamber A overcomes the combined force of oil pressure in the chamber B and tension of the control spring, and shifts the control valve.
- Port is made open to release oil pressure in the chamber A into the chamber C, and the cam ring is shifted to right.
- This reduces the pressure chamber in capacity to decrease oil pump output per revolution, thus maintaining constant the flow rate from the chamber D.

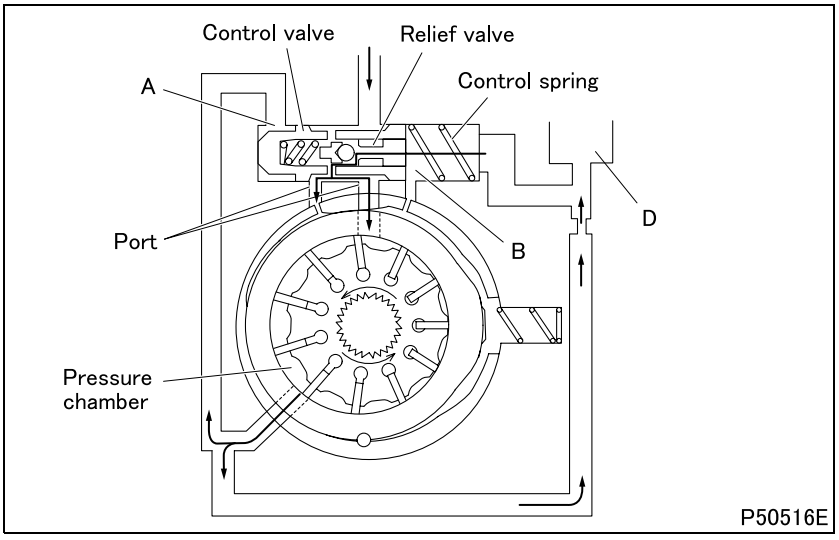

(2) Operation of relief valve

- The combined force of oil pressure in the chamber B and tension of the control spring overcomes oil pressure in the chamber A, and the control valve is shifted.
  Increased oil pressure in the chamber B pushes the relief valve to open port, thus preventing excessive oil pressure from going to the chamber D.

Possible causes \ Symptoms		Steering wheel heavy to operate	Steering wheel play excessive and unstable	Steering wheel pulled to one side	Steering wheel vibration	Steering wheel return not smooth	Steering wheel does not turn	Steering angle insufficient or different between right and left	Oil leakage	Oil pump oil pressure abnormal	Noise from oil pump (grinding)	Noise from oil pump (squeaking)	Noise from oil pump (low whirring)	Reference Gr
Faulty power steering mechanism	Oil quantity insufficient	O	O											
	Oil quantity excessive								O					
	Air bleeding insufficient	O	O											
	Oil viscosity unsuitable	O												
	Hydraulic circuit clogged	O												
	Power steering gear assembly faulty	O	O	O	O	O	O							
	Power steering gear assembly improperly installed	O	O			O								
	Gear engagement rotating torque incorrectly adjusted	O				O								
	Pitman mounting position incorrect							O						
Faulty steering column and link mechanism	Steering shaft universal joint abnormally worn, or damaged	O	O											
	Link deformed	O						O						
	Drag link ball joint abnormally worn or damaged	O	O											
	Tie rod ball joint abnormally worn or damaged	O	O											
	Steering angle off center between left and right			O										
	Tie rod bent						O							Gr26
Faulty front axle, etc.	King pin poorly greased	O				O								
	Front wheel alignment (toe-in, camber and caster) incorrect	O		O	O	O								
	Thrust bearing damaged	O												
	Wheel hub bearing worn out or damaged		O	O	O									
	King pin or bushing worn out or damaged		O	O	O									
	Front axle deformed			O	O									
	Knuckle arm, tie rod arm, knuckle, etc. improperly tightened				O									
	Front spring U-bolt, nut, etc. loose				O									Gr33A
	Front tire radial and lateral runout; static and dynamic balance incorrect				O									Gr31
	Front axle parts overtightened					O								Gr26
	Steering angle incorrectly adjusted						O	O						
	Mounted parts, connections loose		O											
	Knuckle stopper bolt improperly adjusted							O						

Possible causes \ Symptoms		Steering wheel heavy to operate	Steering wheel play excessive and unstable	Steering wheel pulled to one side	Steering wheel vibration	Steering wheel return not smooth	Steering wheel does not turn	Steering angle insufficient or different between right and left	Oil leakage	Oil pump oil pressure abnormal	Noise from oil pump (grinding)	Noise from oil pump (squeaking)	Noise from oil pump (low whirring)	Reference Gr
Faulty oil pump	Oil pump housing faulty								O					
	O-ring, oil seal faulty								O					
	Bolt improperly tightened								O					
	Maximum generated oil pressure insufficient									O				
	Oil line crushed or clogged									O				
	Air caught in oil pump										O			
	Oil pump interior seized									O	O	O		
	Mounting bolt and nut loose												O	
	Pump body faulty												O	
	Valve malfunctioning									O				
Other abnormalities	Load excessive forward of load-carrying platform	O												
	Load excessive rearward of load-carrying platform		O											
	Load excessive on one side of loading bed			O										
	Difference excessive in wheelbase between left and right			O										
	Propeller shaft runout excessive				O									Gr25
	Rear axle housing bent			O										Gr27
	Final drive gear and final drive pinion damaged or improperly engaged				O									Gr26B, 27
	Tire pressure insufficient	O												Gr31
	Tire pressure excessive		O											
	Difference excessive in degree of wear between left and right tires			O										
	Left and right tires different in outer diameter			O										
	Front tire radial and lateral runout, static and dynamic balance incorrect				O									
	Braking force unbalanced			O										Gr35A, E

ON-VEHICLE INSPECTION AND ADJUSTMENT

1. Change of Power Steering Fluid

Tightening torque (Unit: N·m {ft.lbs, kgf·m})

Mark	Parts to be tightened	Tightening torque	Remarks
–	Feed pipe and return pipe	11.8 to 17.6 {8.7 to 13, 1.2 to 1.8}	–

Lubricant and/or sealant

Mark	Points of application	Specified lubricant and/or sealant	Quantity
–	Power steering oil tank	Automatic transmission fluid (DEXRON, DEXRON II or DEXRON III type)	Between MIN and MAX of power steering oil tank

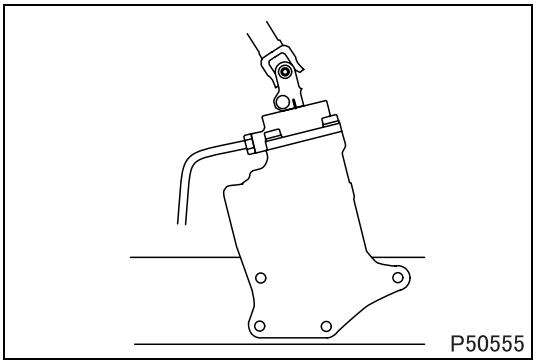

(1) Draining

- Jack up the front wheels.
- Clean the port areas of feed and return pipes to prevent ingress of dirt, dust, and other foreign matters inside the power steering gear.
- Loosen feed and return pipes connected to the power steering gear.
- Repeatedly turn the steering wheel fully left and right to drain the fluid from the power steering gear.
- After draining the fluid, tighten the feed and return pipes to specified torque.

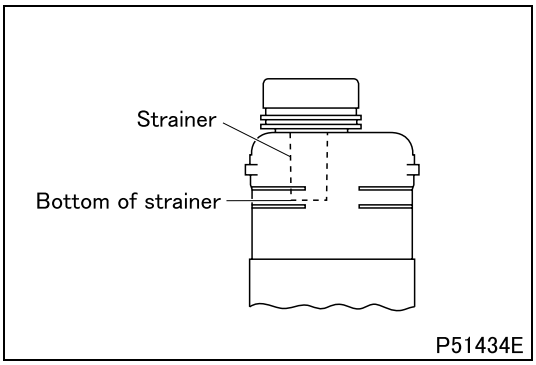

(2) Filling

- Pour fluid into the power steering oil tank up to the bottom of the strainer.

CAUTION ⚠

- **Power steering fluid is used for brake booster (hydraulic booster). Therefore, do not supply any other oil than power steering fluid such as brake fluid to the oil tank. <Hydraulic booster>**

- Bleed the power steering system of air.

2. Bleeding of Power Steering System

Lubricant and/or sealant

Mark	Points of application	Specified lubricant and/or sealant	Quantity
–	Power steering oil tank	Automatic transmission fluid (DEXRON, DEXRON II or DEXRON III type)	Between MIN and MAX of power steering oil tank

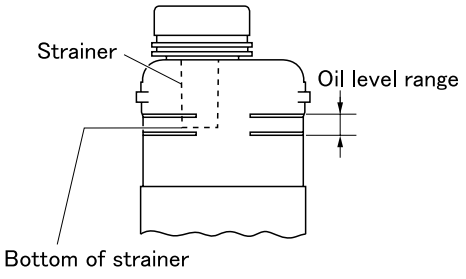

P50444E

- Pour fluid to the power steering oil tank up to the bottom of the strainer.

CAUTION ⚠

- **Power steering fluid is used for brake booster (hydraulic booster). Therefore, do not supply any other oil than power steering fluid such as brake fluid to the oil tank. <Hydraulic booster>**

- With the engine stopped, jack up the front wheels.
- Repeatedly turn the steering wheel fully left and right. When the fluid level has dropped, add fluid enough to maintain the fluid level within the specified range.
- Start the engine to idle.
- When the fluid level has dropped, stop the engine and add fluid enough to maintain the fluid level within the specified range.
- Restart the engine. While checking for a drop in fluid level, turn the steering wheel fully left and right and add fluid as much as necessary. Repeat this practice until the fluid level is stabilized within the specified range.
- Fully press the brake pedal (with a foot force of approximately 250 N {55 lbs., 25 kgf or more}) a few times. Repeat this until the fluid level is stabilized within the specified range. (In this case, there is no need to operate the steering wheel.) <Hydraulic booster>
- Turn the steering wheel fully left and right repeatedly.

CAUTION ⚠

- **To avoid seizure of the power steering oil pump, do not keep the steering wheel turned fully to left or right for more than 10 seconds when the engine is running.**

- If there is any abnormal noise or a fluid level fluctuation, air should be still trapped in the power steering system. Turn the steering wheel several times to raise the fluid temperature to approximately 60 to 80°C {140 to 175°F}.
- Stop the engine and wait for approximately five minutes.
- Lower the front wheels and turn the steering wheel several times. If there is no noise or fluid level fluctuation, the bleeding of the power steering system is completed.
- With the engine stopped, press the brake pedal several times and bleed the brake booster (hydraulic booster) by means of emergency pump. <Hydraulic booster>
- Repeat starting and stopping the engine several times to remove small air bubbles left in the power steering oil tank.
- If air bubbles are not removed completely, drive the vehicle for a while, then check for abnormal noise and oil level fluctuation.
- When bleeding is finished, check that fluid in the power steering oil tank is within the specified level range. Also check pipe and hose connections for fluid leaks.
- After bleeding is finished, check the brake booster (hydraulic booster) for performance (input and output characteristics). <Hydraulic booster>

3. Performance Verification Test of Power Steering System

Service standards

Location	Maintenance item		Standard value	Limit	Remedy
–	Power steering system fluid pressure (with hands off steering wheel)	With vacuum booster	490 kPa {71 psi, 5.0 kgf/cm^2} or less	–	Repair *
		With hydraulic booster	980 kPa {140 psi, 10.0 kgf/cm^2} or less	–	
–	Relief set pressure	With vacuum booster	$10.8\ ^{+0.20}_{-0.49}$ MPa {$1560\ ^{+29}_{-71}$ psi, $110\ ^{+2}_{-5}$ kgf/cm^2}	–	Replace
		With hydraulic booster	$12.3\ ^{0}_{-0.49}$ MPa {$1780\ ^{0.0}_{-71}$ psi, $125\ ^{0}_{-5}$ kgf/cm^2}	–	

*: Check the power steering gear assembly and hydraulic circuit for clogging.

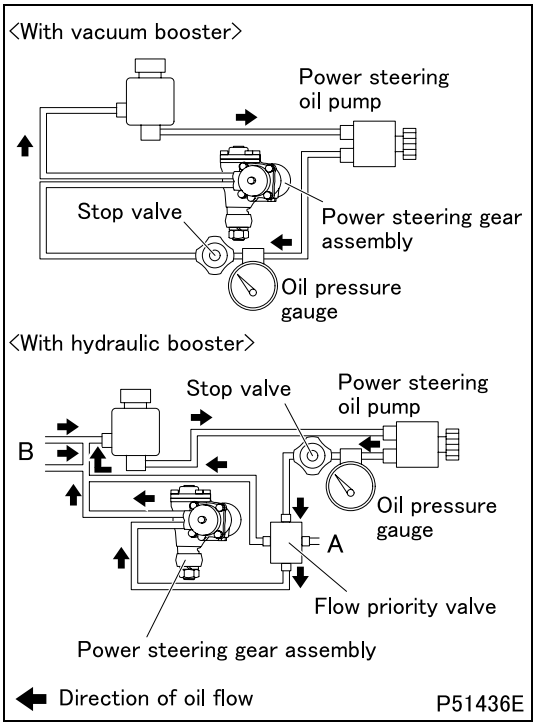

- Perform the tests with the following measuring conditions to verify normal operation of the power steering gear assembly and power steering oil pump.
  A: To hydraulic booster
  B: From hydraulic booster

- Install oil pressure gauge capable of measuring upward of 13.2 MPa {1910 psi,135 kgf/cm^2} and stop valve between power steering oil pump and power steering gear assembly <With vacuum booster> or flow priority valve <With hydraulic booster>, then bleed air.
- Start engine to idle.
- Turn steering wheel left and right several times to raise fluid temperature up to 50 to 60°C {122 to 140°F}.
- With the engine idling, fully open stop valve.

CAUTION ⚠

- **To avoid seizure of the power steering oil pump, never close the stop valve for more than 10 seconds.**

Test item	Test procedure	Judging standard
Verification of smooth operation	• Jack up front wheels and turn steering wheel fully left and right.	Smooth operation throughout test
Measurement of fluid pressure in power steering system	• Measure fluid pressure with hands off steering wheel.	Specified standard value
Measurement of relief set pressure	• Gradually increase engine speed to 1000 to 1500 rpm, then close stop valve and measure maximum fluid pressure. • Do not close stop valve for longer than 10 seconds.	Specified standard value

4. Steering Wheel Play

Service standards (Unit: mm {in.})

Location	Maintenance item	Standard value	Limit	Remedy
–	Steering wheel play (measure at the periphery of steering wheel)	5 to 50 {0.2 to 2.0}	–	Adjust

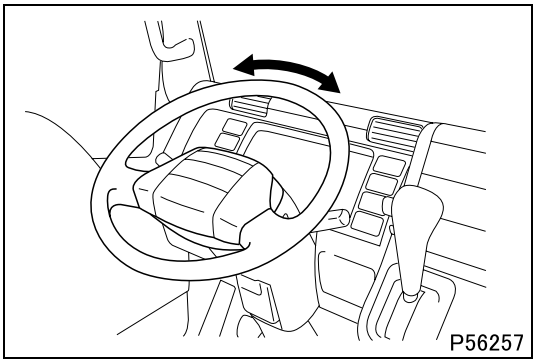

- With vehicle placed straight forward, start the engine and gently turn the steering wheel left and right to measure its peripheral play.
- If the play deviates from the standard value, check tightening points and the power steering gear.

5. Steering Column Looseness

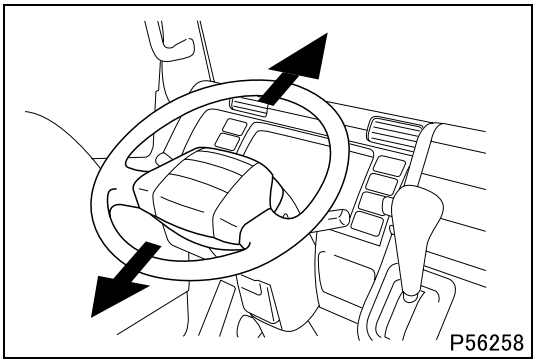

- Push and pull the steering wheel by hand to check the steering column for looseness.
- With the steering column tilted all the way forward, pull the steering wheel backward and check the steering column for looseness.
- If the steering column is loose, adjust the tilting and telescoping lever.

6. Inspection of Drag Link Ball Joint

Service standards (Unit: mm {in.})

Location	Maintenance item	Standard value	Limit	Remedy
–	Play of drag link ball joint	0	–	Replace

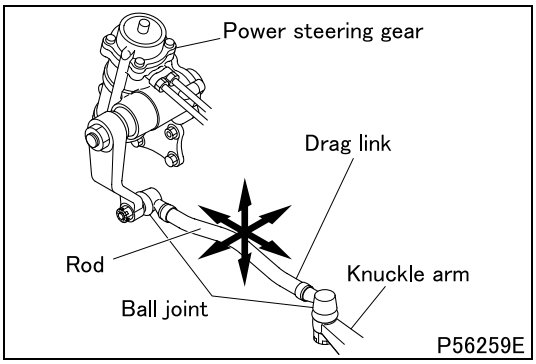

(1) Play of drag link ball joint

- With the vehicle in the stationary state, move the drag link by the rod in the forward, backward, vertical and lateral directions of the vehicle and check for play at the ball joints with the gear power steering gear and knuckle arm.
- If feeling play with your hand, replace the drag link.

(2) Dust cover

- Check the dust cover for wear, cracks and other damage.
- If there is any abnormality, replace the drag link.

STEERING COLUMN

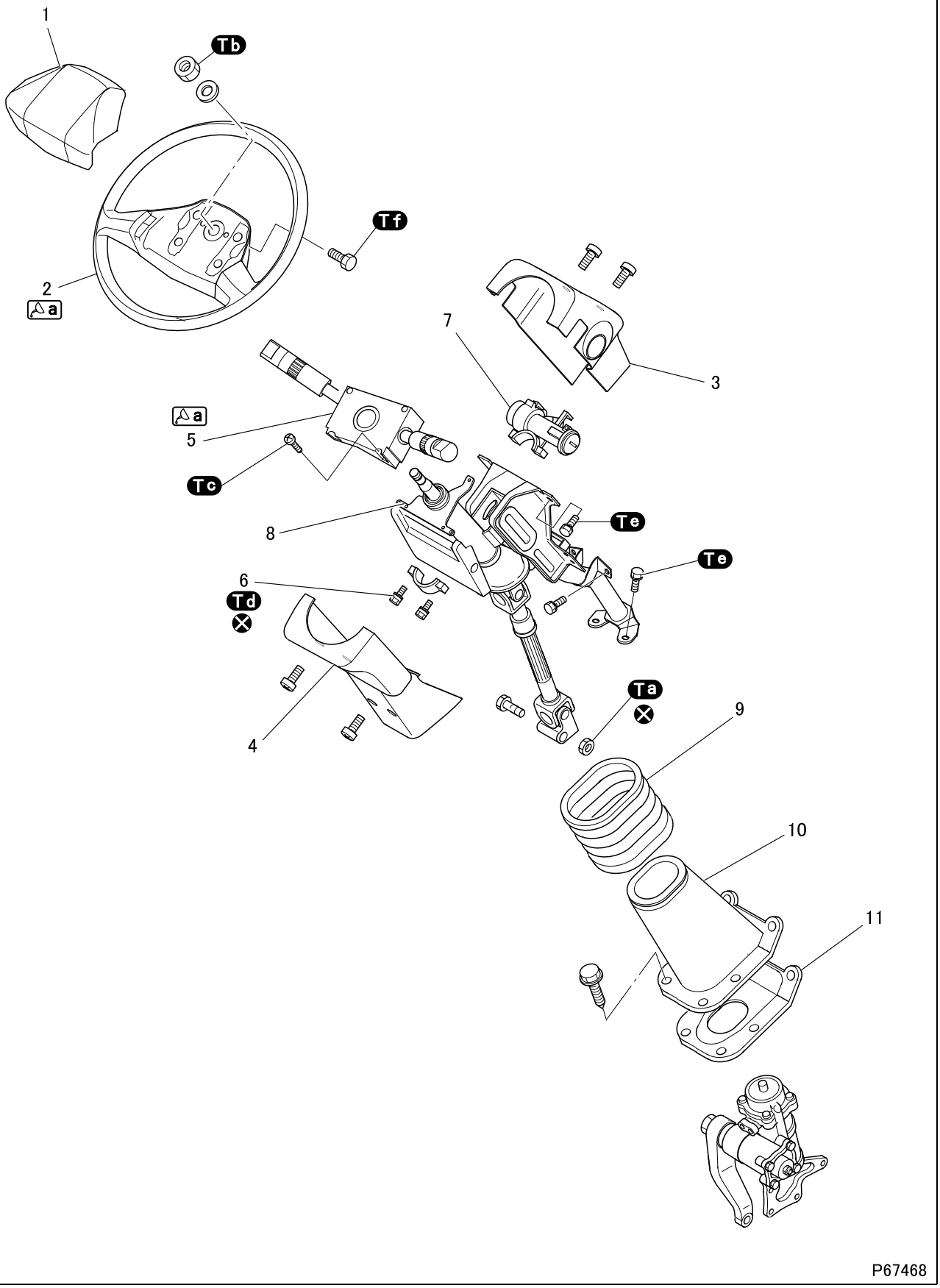

● **Removal sequence**

1 Horn pad
2 Steering wheel
3 Front column cover
4 Rear column cover
5 Combination switch
6 Twist-off bolt
7 Starter switch
8 Steering column
(For details, see later pages.)
9 Dust cover
10 Dust cover
11 Dust cover

⊗: Non-reusable parts

● **Installation sequence**

Follow the removal sequence in reverse.

- After installation, check the steering column for looseness. (See ON-VEHICLE INSPECTION AND ADJUSTMENT.)

Tightening torque (Unit: N·m {ft.lbs, kgf·m})

Mark	Parts to be tightened	Tightening torque	Remarks
Ta	Nut (steering column and power steering gear mounting)	22 to 31 {16 to 23, 2.2 to 3.2}	–
Tb	Nut (steering wheel mounting)	39 to 49 {29 to 36, 4.0 to 5.0}	–
Tc	Screw (combination switch mounting)	2.5 ± 0.5 {1.8 ± 0.4, 0.3 ± 0.1}	–
Td	Twist-off bolt (starter switch mounting)	14.2 ± 1.5 {10 ± 1.1, 1.4 ± 0.2}	–
Te	Bolt (steering column assembly mounting)	17 to 25 {12 to 19, 1.7 to 2.6}	–
Tf	Bolt (horn pad mounting)	7 to 11 {5.2 to 8.1, 0.7 to 1.1}	–

Lubricant and/or sealant

Mark	Points of application	Specified lubricant and/or sealant	Quantity
a	Contact ring under steering wheel	Wheel bearing grease [NLGI No. 2 (Li soap)]	As required
	Horn contact piece on combination switch side		

◆Work before removal◆

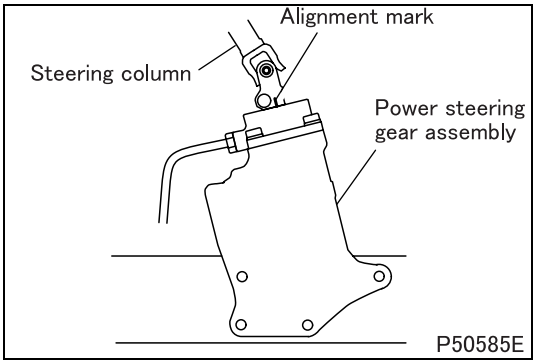

■ **Alignment mark: Steering column and power steering gear assembly**

- Provide alignment marks on the steering column and power steering gear assembly.

◆Removal procedure◆

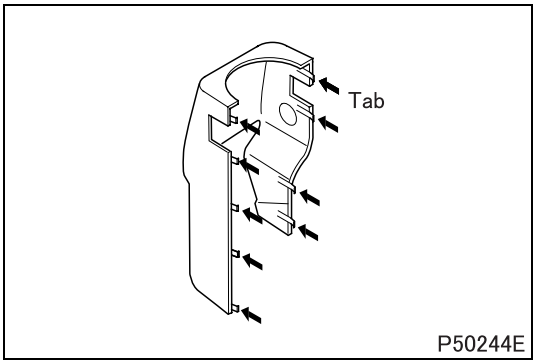

■ **Removal: Front column cover**

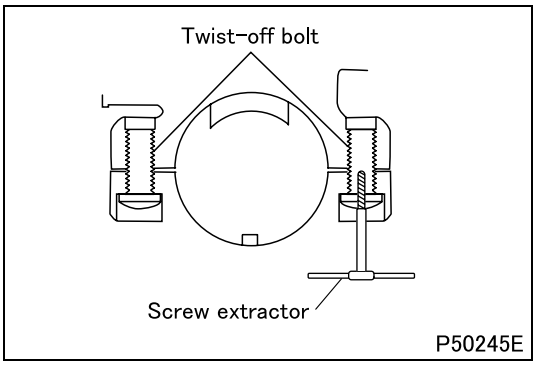

■ **Removal: Starter switch**

- Drill a hole of 5.5 to 6 mm {0.22 to 0.24 in.} in diameter to a depth of 10 to 15 mm {0.39 to 0.59 in.} in the twist-off bolt.
- Using the drilled hole, screw the screw extractor counterclockwise into the twist-off bolt and remove it.

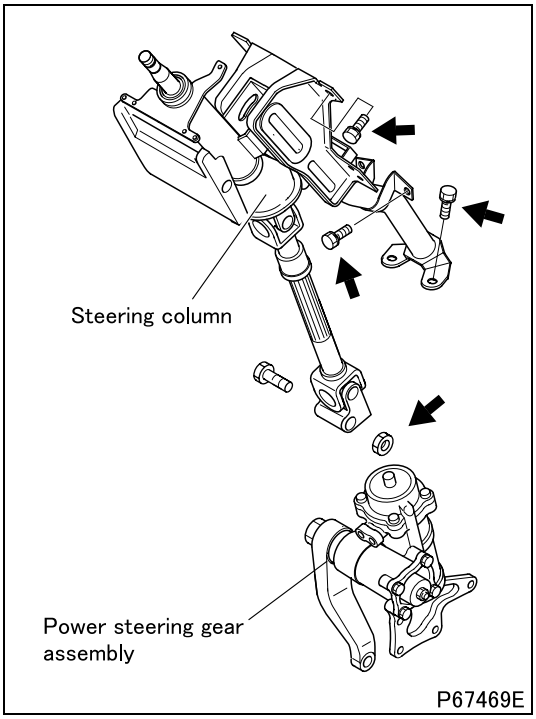

■ **Removal: Steering column**

- To remove the steering column, remove the nut connecting it to the power steering gear, in addition to mounting bolts in the cab.

◆Installation procedure◆

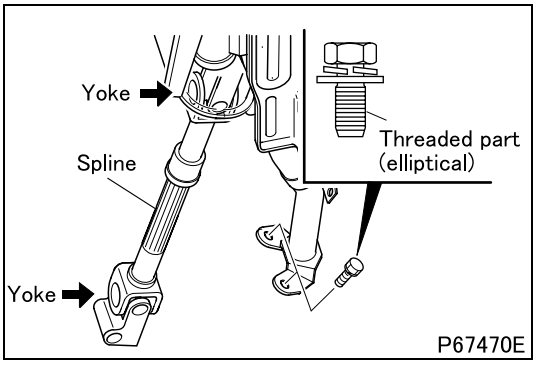

■ **Installation: Steering column**

- If the spline is off the steering column, assemble them with the yokes facing in the same direction.
- Install the steering column using the illustrated bolts. The threaded portion of these bolts is elliptical for grounding the horn circuit properly.

■ **Installation: Starter switch**

- Install the starter switch using new twist-off bolts. Tighten the bolts to specified torque to snap off their heads.

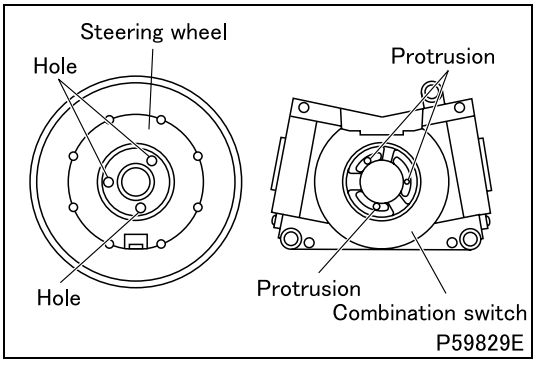

■ **Installation: Steering wheel**

- Align the three holes of the steering wheel with three protrusions of the cancel cam on the combination switch to attach the steering wheel.

◆Inspection after installation◆

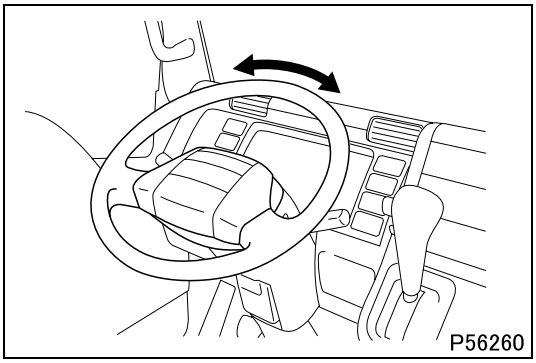

■ **Inspection: Noise from steering wheel**

- Lightly turn the steering wheel left and right and check for noise and other abnormalities.
- If any abnormality is found, disassemble the steering wheel, remove the cause and reinstall.

M E M O

STEERING COLUMN

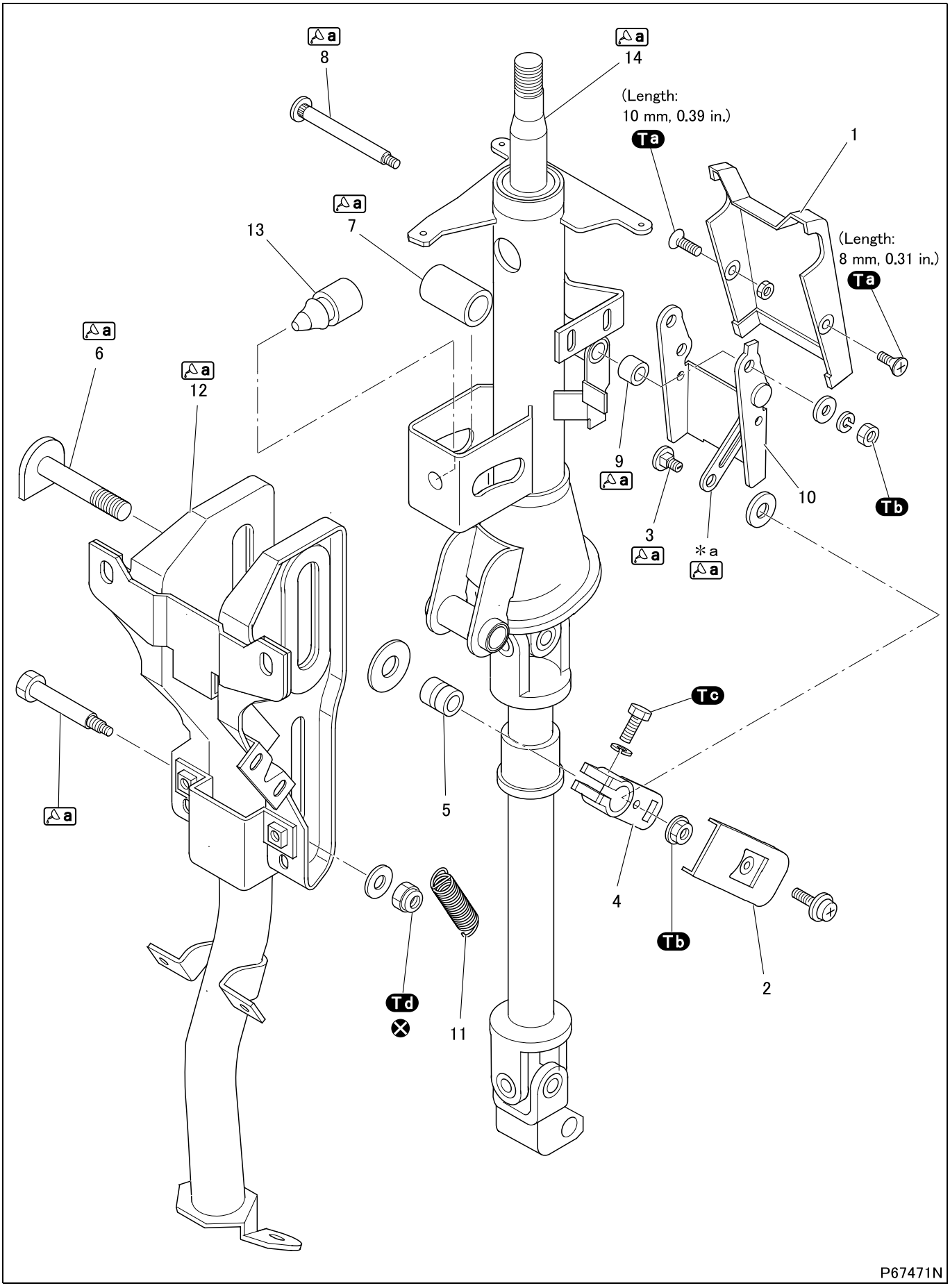

● **Disassembly sequence**

1 Lever cover
2 Lever protector
3 Pin
4 Lock lever
5 Nut
6 Bolt
7 Spacer
8 Pin
9 Collar
10 Tilting and telescoping lever
11 Spring
12 Steering column support
13 Shock absorbing rubber
14 Steering column

***a**: Link plate
⊗: Non-reusable parts

● **Assembly sequence**

Follow the disassembly sequence in reverse.

Tightening torque (Unit: N·m {ft.lbs, kgf·m})

Mark	Parts to be tightened	Tightening torque	Remarks
Ta	Screw (lever cover mounting)	1.0 to 1.5 {0.7 to 1.1, 0.1 to 0.2}	–
Tb	Nut (lock lever mounting)	3.9 to 5.9 {2.9 to 4.4, 0.4 to 0.6}	–
	Nut (tilting and telescoping lever mounting)		–
Tc	Bolt (lock lever mounting)	16 to 20 {12 to 15, 1.6 to 2.0}	–
Td	Nut (steering column support mounting)	9 to 14 {6.6 to 10, 0.9 to 1.4}	–

Lubricant and/or sealant

Mark	Points of application	Specified lubricant and/or sealant	Quantity
a	Friction surface of pin	Wheel bearing grease [NLGI No. 2 (Li soap)]	As required
	Friction surface of collar		
	Staked area of link plate		
	Friction surface and thread of bolt		
	Friction surface of spacer		
	Friction surfaces of steering column support and steering column		
	Friction surface of bolt		

◆**Work before removal**◆

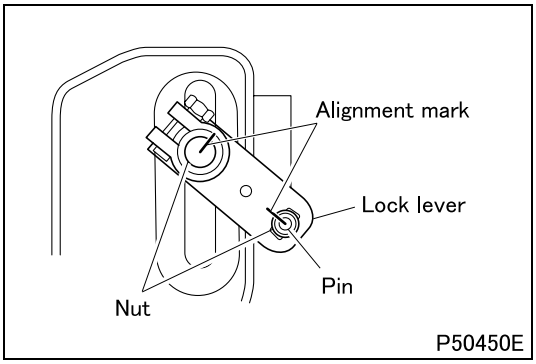

■ **Alignment mark: Nut and lock lever**

- Be sure to provide alignment marks on the lock lever and nuts before removal.

◆Installation procedure◆

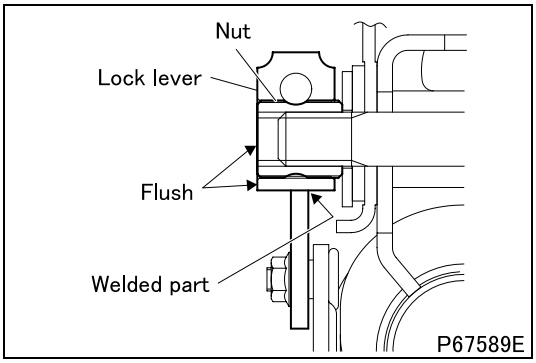

■ **Installation: Lock lever**

- Install the lock lever flush with the nut, with the welded part facing in the illustrated direction.

◆Inspection after installation◆

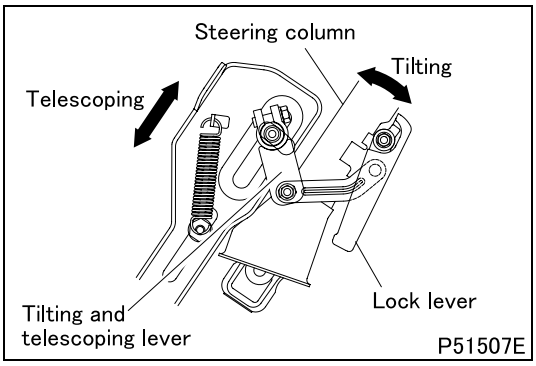

■ **Inspection: Tilting and telescoping lever operating force**

- Tilt the steering column all the way forward and telescope it to the mid-point of the movable range.
- Push the tilting and telescoping lever in and lock the steering column. In this state, check that the force required to operate the tilting and telescoping lever is 140 N {31 lbs, 14 kgf} or more.
- Push the steering column forward by hand to check that it is securely held.
- Adjust the installed position of the lock lever if necessary.

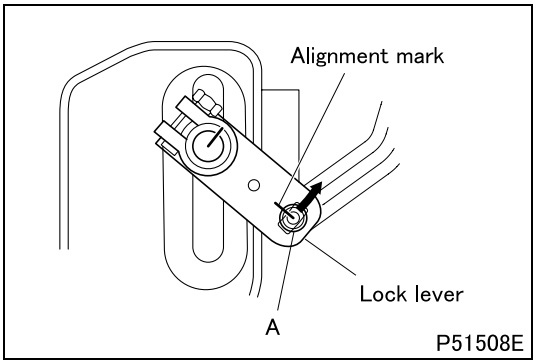

■ **Adjustment: Lock lever**

- Loosen nut A.
- Move the lock lever to relocate the nut A in the slot from the alignment mark in the arrow direction, then tighten the nut A in that position.

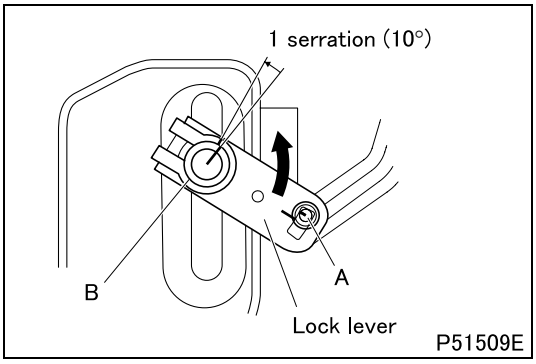

- If the nut A is already at the end of the slot in the lock lever and cannot be relocated, remove the lock lever and turn the nut B one serration (10°) from the alignment mark in the arrow direction, then reinstall the lock lever.
- Adjust the tightening position of the nut A so that the tilting and telescoping lever operating force becomes 140 N {31 lbs, 14 kgf} or more.

M E M O

POWER STEERING GEAR ASSEMBLY AND DRAG LINK

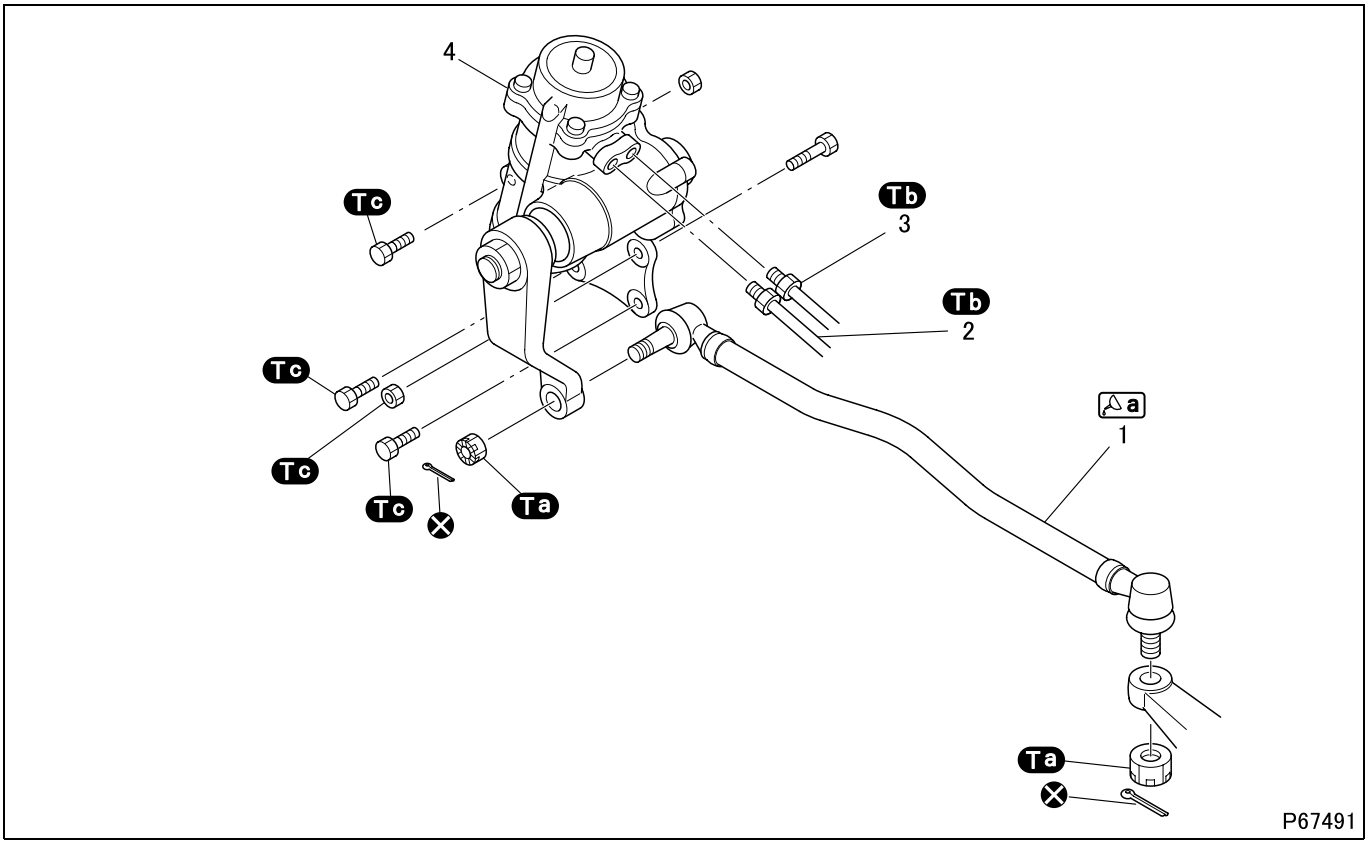

● **Removal sequence**

1 Drag link
2 Feed pipe
3 Return pipe
4 Power steering gear assembly

⊗: Non-reusable parts

CAUTION ⚠

- **When removing the drag link, take care not to deform or damage the dust cover.**

- Do not attempt to disassemble the drag link because it is of a unit construction.

● **Installation sequence**

Follow the removal sequence in reverse.

Service standards

Location	Maintenance item		Standard value	Limit	Remedy
1	Ball joint of drag link	Play (± 980 N {220 lbs ± 100 kgf} loaded)	0 to 0.15 {0 to 0.0059}	–	Replace
		Rotation torque	1.0 to 5.9 N·m {0.1 to 4.4 ft.lbs, 0.1 to 0.6 kgf·m}	–	

Tightening torque (Unit: N·m {ft.lbs, kgf·m})

Mark	Parts to be tightened	Tightening torque	Remarks
Ta	Nut (drag link mounting)	137 to 196 {100 to 145, 14 to 20}	–
Tb	Feed pipe and return pipe	11.8 to 17.6 {8.7 to 13, 1.2 to 1.8}	–
Tc	Bolt or nut (power steering gear mounting)	83.5 to 108 {61 to 80, 8.5 to 11}	–

Lubricant and/or sealant

Mark	Points of application	Specified lubricant and/or sealant	Quantity
a	Lip area of drag link ball joint dust cover	Wheel bearing grease [NLGI No. 2 (Li soap)]	As required

◆Inspection procedure◆

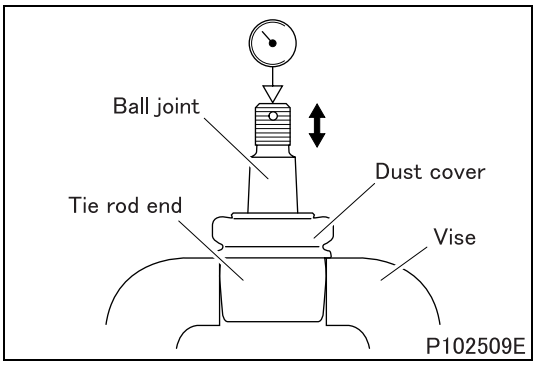

■ **Inspection: Drag link**

(1) Play

- Fix the tie drag link with a vise.

CAUTION ⚠

- **Take care not to deform or damage the dust cover when fixing it with a vise.**

- If measured value deviates from the standard value with applying the specified load (push and pull) to the ball joint, replace the tie drag link.

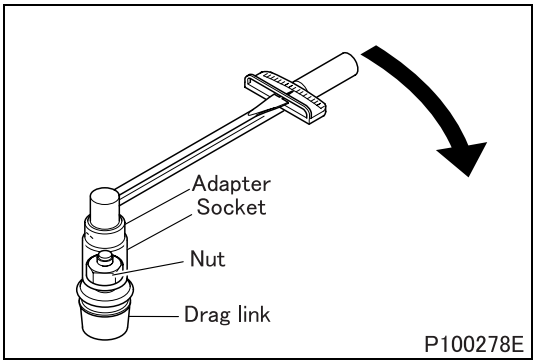

(2) Rotation torque

- Install the drag link mounting nut on the drag link.
- Install the socket, adapter and torque wrench to measure the rotation torque.
- If the measured value deviates from the standard value, replace the drag link.

(3) Dust cover

- Check the dust cover for wear, cracks and other damage. These abnormalities may cause water infiltration to the ball joint and wear out it at early stage.
- If any abnormality is found in the dust cover, replace the drag link.

◆Installation procedure◆

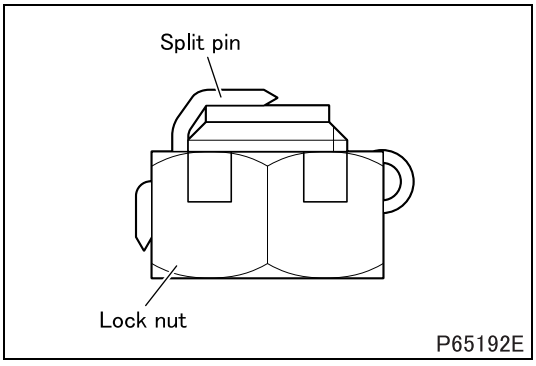

■ **Installation: Drag link**

- Align a slot in the lock nut with the split pin hole in the ball joint by turning the lock nut in the tightening direction while checking the torque is within the specified range, then install the split pin as shown in the illustration.

POWER STEERING GEAR ASSEMBLY AND DRAG LINK

Power Steering Gear Assembly

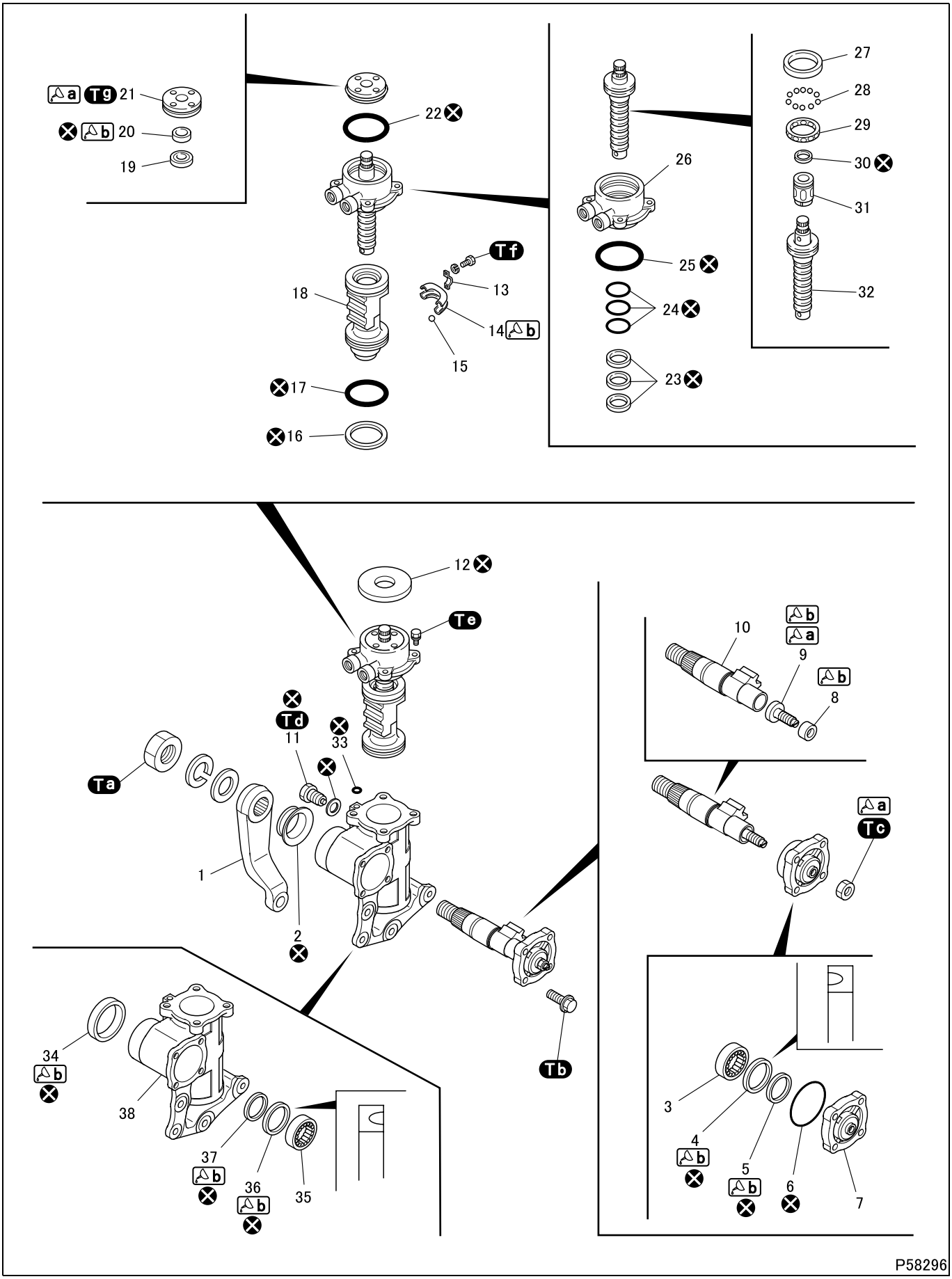

● Disassembly sequence

1 Pitman arm
2 Dust cover
★**3** Needle bearing
4 Y-packing
5 Backup ring
6 O-ring
7 Side cover
★**8** Retainer
★**9** Adjusting screw
10 Sector shaft
11 Plug
12 Dust cover
13 Ball tube clip
14 Ball tube
15 Steel ball
16 Seal ring
17 O-ring
18 Piston
19 Ball bearing
20 Oil seal
21 Adjusting plug
22 O-ring
23 Seal ring
24 O-ring
25 O-ring
26 Valve housing
27 Side race
28 Steel ball
29 Bearing cage
30 Seal ring
31 Rotor
32 Worm and stub shaft
33 O-ring
34 Oil seal
★**35** Needle bearing
36 Y-packing
37 Backup ring
38 Body

⊗: Non-reusable parts

- Do not remove parts marked ★ unless absolutely necessary.

CAUTION ⚠

- **When holding the body with a vise, take care not to scratch the gasket seated surface of plug.**

● Assembly sequence

Follow the disassembly sequence in reverse.

Repair kit: Repair kit

Service standards (Unit: mm {in.})

Location	Maintenance item		Standard value	Limit	Remedy
–	Power steering gear	Starting torque	0.88 N·m {0.6 ft.lbs, 0.1 kgf·m} or less	–	Adjust
		Engagement torque	0 to 0.25 N·m {0 to 0.2 ft.lbs, 0 to 0.03 kgf·m}	–	
		Normal turning torque	0.15 to 0.78 N·m {0.1 to 0.6 ft.lbs, 0.02 to 0.1 kgf·m}	–	
9, 10	End play between sector shaft and adjusting screw		0.1 {0.0039} or less	–	Replace
10	Sector shaft outer diameter	Adjusting screw side	ϕ34.975 {1.38}	ϕ34.875 {1.37}	Replace
		Pitman side	ϕ44.975 {1.77}	ϕ44.875 {1.77}	
18, 32	Play in diametric direction between piston and worm and stub shaft		–	0.5 {0.020} or less	Replace
18, 38	Clearance between piston and body		0.11 {0.0043}	0.16 {0.0063}	Replace
31, 32	Clearance between rotor and worm and stub shaft		0.02 {0.00079}	0.03 {0.0012}	Replace

Tightening torque (Unit: N·m {ft.lbs, kgf·m})

Mark	Parts to be tightened		Tightening torque	Remarks
Ta	Lock nut (pitman arm fastening)		294 to 343 {215 to 255, 30 to 35}	–
Tb	Bolt (sector shaft mounting)		53.9 to 63.7 {40 to 47, 5.5 to 6.5}	–
Tc	Nut (adjusting screw tightening)		63.7 to 73.5 {47 to 54, 6.5 to 7.5}	–
Td	Plug		73.6 to 83.4 {54 to 62, 7.5 to 8.5}	–
Te	Bolt (valve housing attaching)	FE	98.1 to 107.9 {72 to 80, 10 to 11}	–
		FG	53.9 to 63.7 {40 to 47, 5.5 to 6.5}	–
Tf	Screw (ball tube clip fitting)		4.41 to 5.39 {3.3 to 4.0, 0.4 to 0.5}	–
Tg	Adjusting plug		147 to 166 {110 to 120, 15 to 17}	–

Lubricant and/or sealant

Mark	Points of application	Specified lubricant and/or sealant	Quantity
a	Nut threads and contact surface of side cover	Hermetic seal 101Y or ThreeBond 1102	As required
	Adjusting screw threads		
	Periphery of adjusting plug		
b	Inner periphery of backup ring	Multi-purpose type grease [NLGI No. 2 (Li soap)]	As required
	Inner periphery of Y-packing		
	Inner periphery of retainer		
	Adjusting screw threads and contact surface of sector shaft		
	Inner surface of ball tube		
	Inner periphery of oil seal		

Special tools (Unit: mm {in.})

Mark	Tool name and shape	Part No.	Application
a	Preload socket 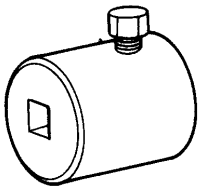 10028	MB991006	Measurement of power steering gear assembly starting torque
b	Pitman arm puller A: 49 {1.93} B: 76 {2.99} 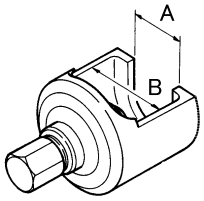 01355	MH062472	Removal of pitman arm
c	Insert tool assembly 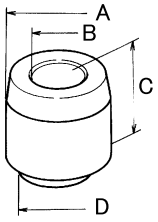 01358 A: ϕ35 {1.38} B: ϕ25 {0.98} C: 53.5 {2.11} D: ϕ33 {1.30}	MH062881 *910-21719	Forming of backup ring
d	Insert tool assembly 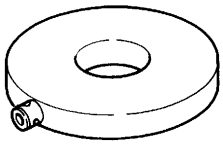 01356	MH063814 *910-11004	Forming of backup ring and installation of oil seal
e	Needle A: 120 {4.72} B: ϕ3 {0.12} 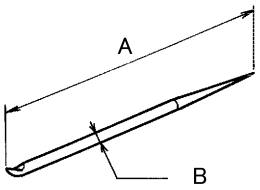 02288	MC811948 *910-21200	Removal of O-ring and seal ring
f	Bar A: ϕ12.5 {0.49} B: 40 {1.57} 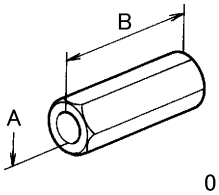 01360	MH063815 *910-22813	Turning of retainer

*: Unisia JKC Steering Systems part numbers

Mark	Tool name and shape	Part No.	Application
g	Squeeze tool 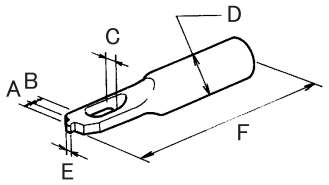 67927 A: 5 {0.20}; B: 8 {0.31}; C: 18 {0.71}; D: ϕ30 {1.18}; E: 4 {0.16}; F: 160 {6.30}	MH063816 *910-21803	Crimping of retainer
h	Insert tool A: ϕ98 {3.86}; B: 52 {2.05}; C: ϕ85.05 {3.35} 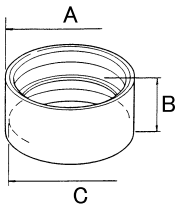 02289	MH063812 *910-21730	Forming of piston seal ring
i	Wrench assembly A: ϕ52 {2.05} 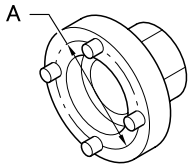 P51270	MH062883 *910-10745	Removal and installation of adjusting plug
j	Attachment assembly C: ϕ137 {5.39} 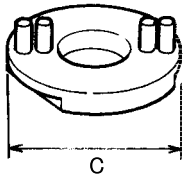 02290	MH063813 *910-10672	Fixing of valve housing
k	Press-fit tool A: ϕ29.7 {1.17}; B: ϕ31.8 {1.25}; C: ϕ45 {1.77} 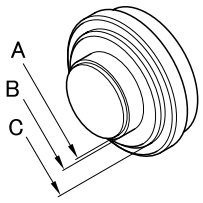 P51271	MH062884 *910-20405	Installation of oil seal

*: Unisia JKC Steering Systems part numbers

<table>
<tr><th>Mark</th><th>Tool name and shape</th><th>Part No.</th><th>Application</th></tr>
<tr><td>l</td><td>Adjusting tool
<table><tr><th>A</th><th>B</th><th>C</th></tr><tr><td>ϕ59.5
{2.34}</td><td>ϕ65.5
{2.58}</td><td>65
{2.56}</td></tr></table> 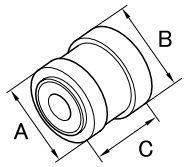
P51272</td><td>MH062885
*910-22997</td><td rowspan="2">Assembly of thrust bearing</td></tr>
<tr><td>m</td><td>Guide assembly
<table><tr><th>A</th><th>B</th><th>C</th></tr><tr><td>ϕ76
{2.99}</td><td>ϕ56
{2.20}</td><td>13
{0.51}</td></tr></table> 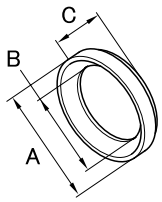
P51273</td><td>MH062886
*910-23051</td></tr>
<tr><td>n</td><td>Insert tool
 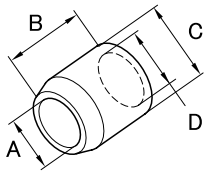
P51274
<table><tr><th>A</th><th>B</th><th>C</th><th>D</th></tr><tr><td>ϕ28.1
{1.11}</td><td>45
{1.77}</td><td>ϕ40
{1.57}</td><td>ϕ30.3
{1.19}</td></tr></table></td><td>MH062882
*910-22776</td><td>Forming of rotor seal ring and valve housing seal ring</td></tr>
<tr><td>o</td><td>Insert tool
 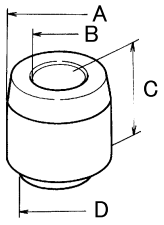
55473
<table><tr><th>A</th><th>B</th><th>C</th><th>D</th></tr><tr><td>ϕ45
{1.77}</td><td>ϕ20
{0.79}</td><td>45
{1.77}</td><td>ϕ33
{1.30}</td></tr></table></td><td>MH062880
*910-21716</td><td>Forming of backup ring</td></tr>
</table>

*: Unisia JKC Steering Systems part numbers

◆Inspection before removal◆

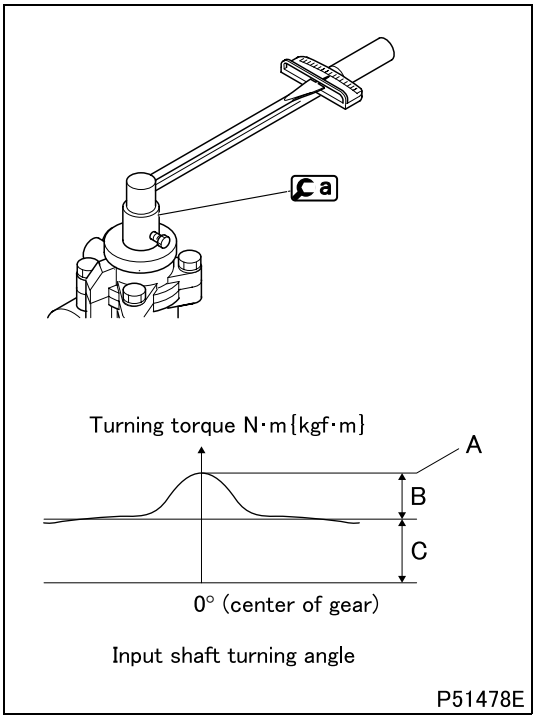

■ **Inspection: Starting torque**

- Using a, measure the starting torque of the power steering gear assembly for reference at the time of reassembly before removal.
  - A: Starting torque (= engagement torque + normal turning torque)
  - B: Engagement torque
  - C: Normal turning torque

◆Removal procedure◆

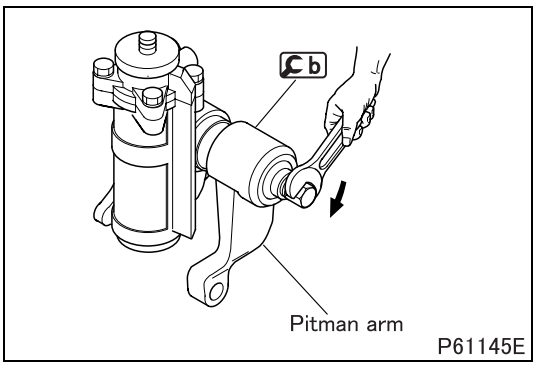

■ **Removal: Pitman arm**

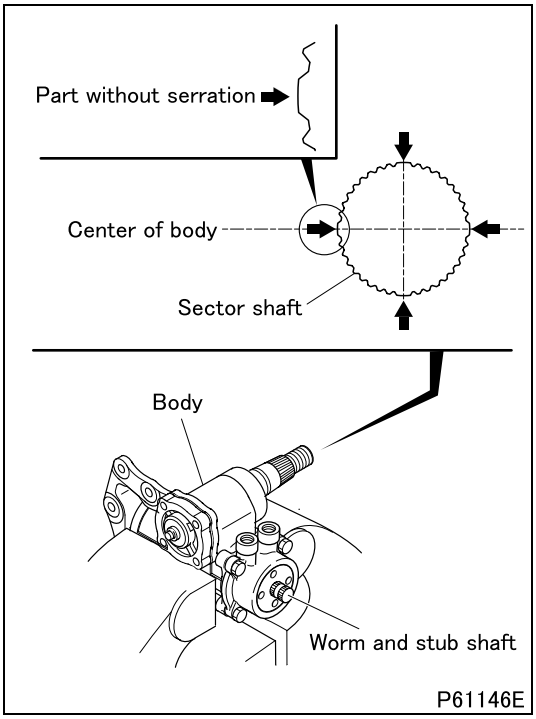

■ **Removal: Sector shaft**

- Before removing, set the sector shaft in neutral position as follows.
- Turn the worm and stub shaft counterclockwise into the lock position, then back it up roughly 2.6 turns to bring the serration missing part of the serrated portion of the sector shaft into parallelism with the center of the body as shown.

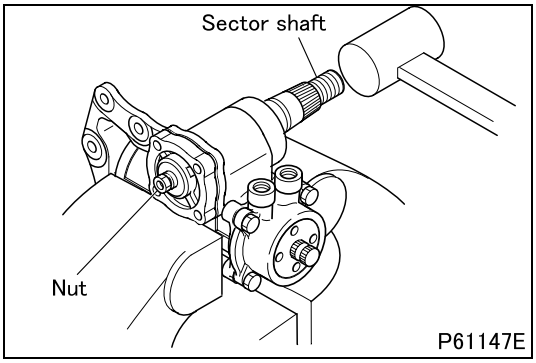

- Loosen nut, and remove the sector shaft by tapping the shaft end with a plastic hammer.
- If the sector shaft is stuck, it should be out of neutral position. In such a case, do not attempt to force it out by hammering but redo the neutral positioning procedure.

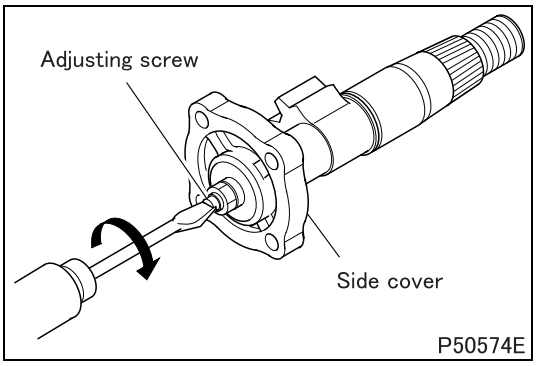

■ **Removal: Side cover**

- Remove the side cover by screwing in the adjusting screw.

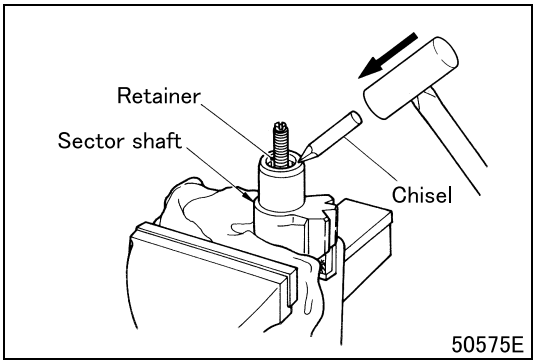

■ **Removal: Retainer**

- Undo the crimp of the retainer (at 2 points) using a chisel.
- When holding the sector shaft with a vise, be sure to cover it with a cloth or the like for protection.

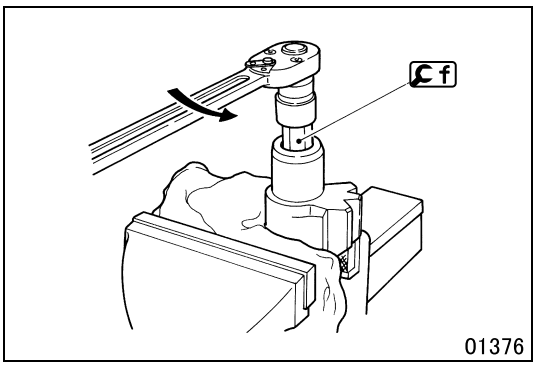

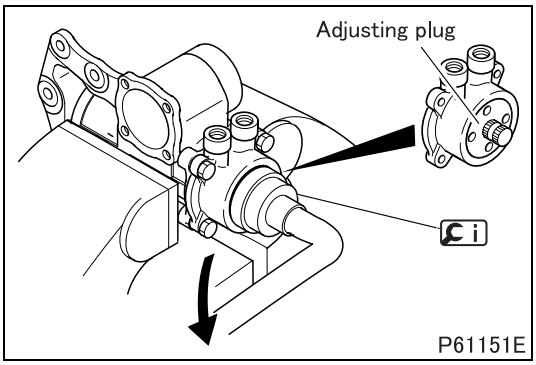

■ **Removal: Worm shaft and valve housing**

- Before removing the worm shaft and valve housing, turn back the adjusting plug by roughly 180° with i.
- Do not remove the adjusting plug. If it is removed, the bearing in the valve housing may pop out.

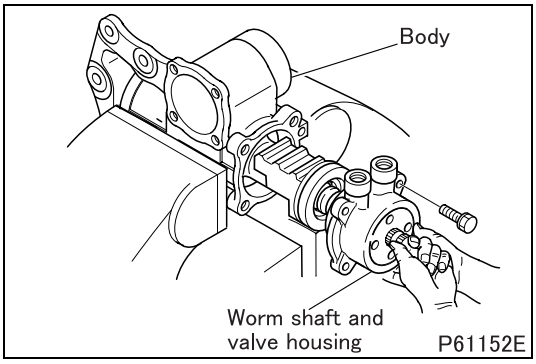

- Remove the worm shaft and valve housing from the body.

CAUTION ⚠

- **Take care so that balls in the worm shaft and valve housing do not pop out.**
- **Take care not to scratch or otherwise damage the inner surface of the body and piston.**

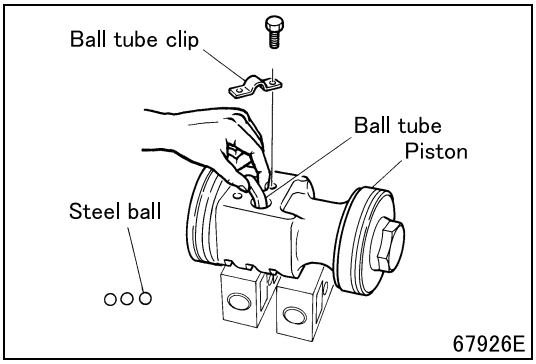

■ **Removal: Ball tube and steel ball**

- First remove steel balls from the piston, then remove ball tube clip. Hold the ball tube between fingers and remove it from the piston moving it lightly.

CAUTION ⚠

- **Be careful not to lose the steel balls (28 pieces in all).**

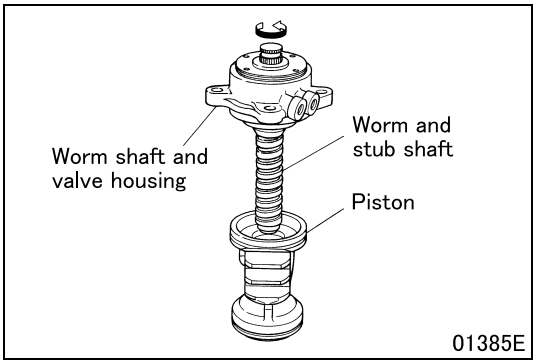

■ **Removal: Piston**

- Holding the worm shaft and valve housing with the piston downward, turn the worm and stub shaft and remove the piston.

CAUTION ⚠

- **Be careful not to tilt the piston during removal. If it is tilted, steel balls will fall off the race of the piston and worm and stub shaft into the piston.**

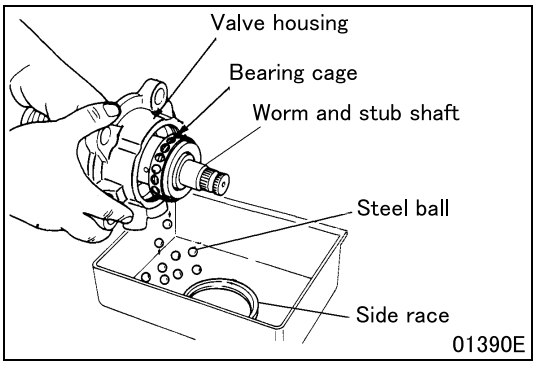

■ **Removal: Worm and stub shaft**

- Remove the worm and stub shaft by pushing its piston-side end out.

CAUTION ⚠

- **Use a suitable receptacle not to lose the side race, steel balls and bearing cage that fall off in separated pieces.**

◆Inspection procedure◆

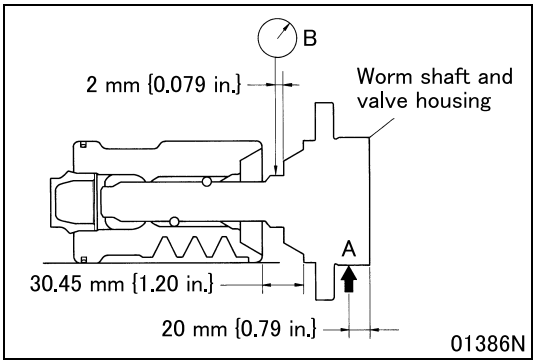

■ **Inspection: Side play of piston and worm and stub shaft**

- Apply a force of 49 N {11 lbs, 5.0 kgf} to the illustrated point A and measure play B (play in the diametric direction) of the worm shaft and valve housing.
- If the measurement exceeds the limit, replace the faulty parts.

◆Installation procedure◆

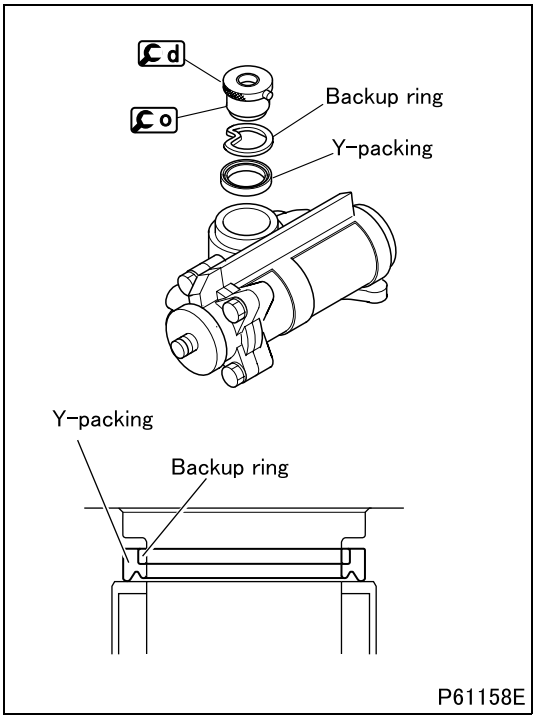

■ **Installation: Backup ring and Y-packing**

- Fill grease in the groove of Y-packing and install Y-packing in the illustrated direction.
- Install backup ring, formed as shown, using d and o.

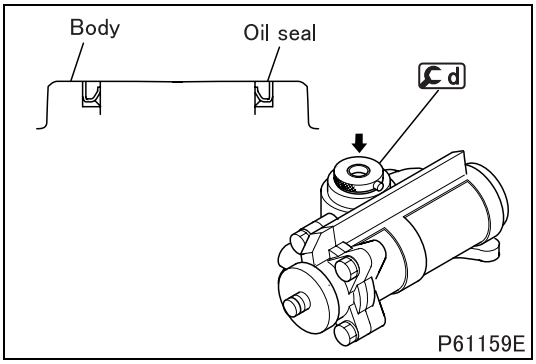

■ **Installation: Oil seal**

- Install the oil seal to the body in the illustrated direction.

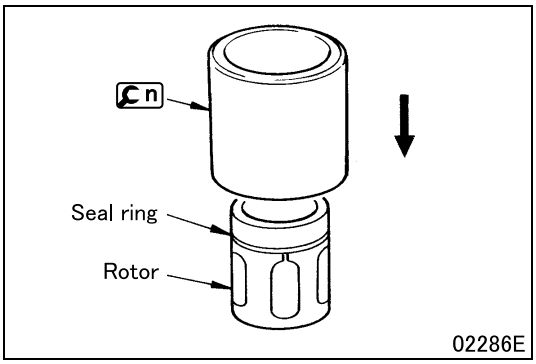

■ **Installation: Seal ring**

- Install the seal ring onto the rotor.
- Form the seal ring to fit the rotor using n.

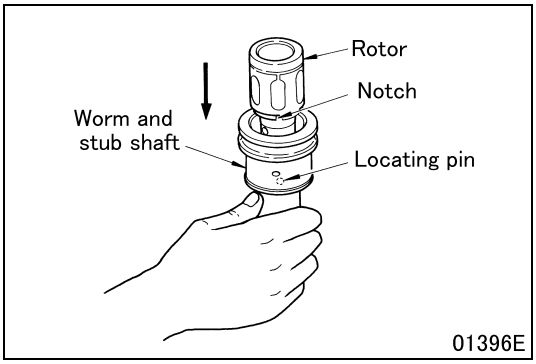

■ **Installation: Rotor**

- Install the rotor aligning its notch with the locating pin of the worm and stub shaft.

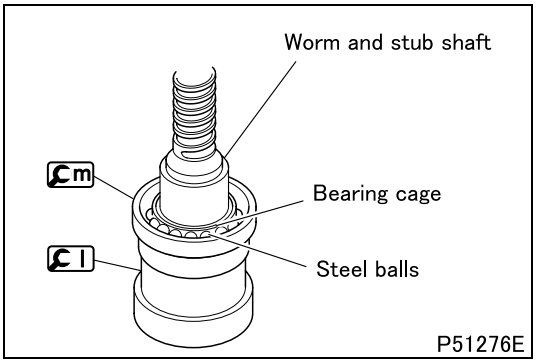

■ **Installation: Side race, steel balls and bearing cage**

- Using [l] and [m] assembled, install the worm and stub shaft in the illustrated direction.
- Install the bearing cage and steel balls onto the worm and stub shaft.

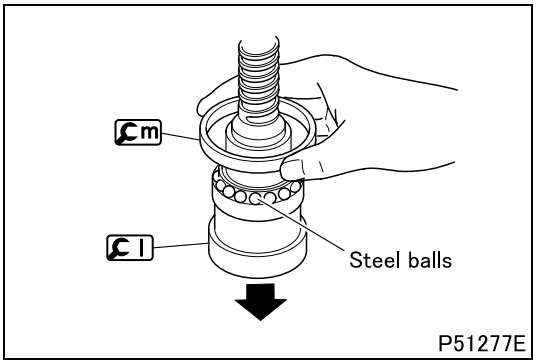

- Holding [m] with hand, slide [l] downward to have steel balls set in place.

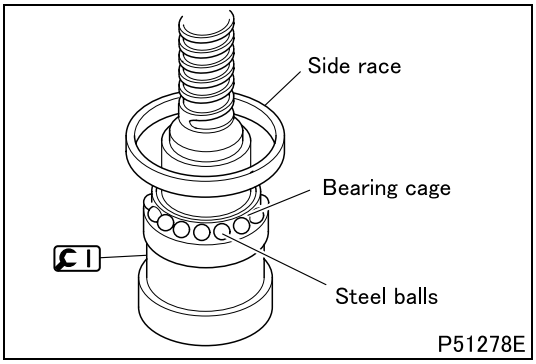

- Install the side race onto the steel balls and bearing cage.

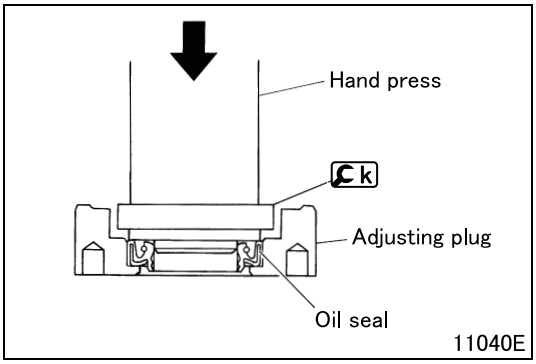

■ **Installation: Oil seal**

- Using k, press oil seal in the illustrated direction into the adjusting plug.

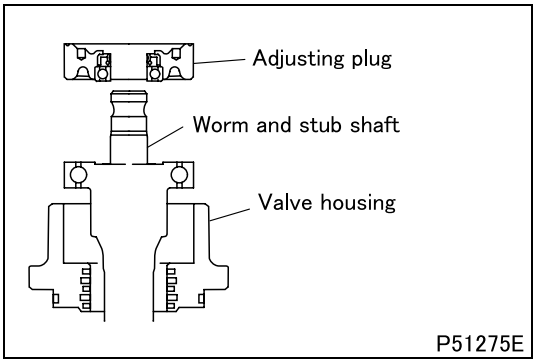

■ **Installation: Worm and stub shaft**

- Install the valve housing onto the worm and stub shaft and secure it in place with adjusting plug.

CAUTION ⚠

- **Take care not to damage the seal rings with the ball race of the worm and stub shaft.**

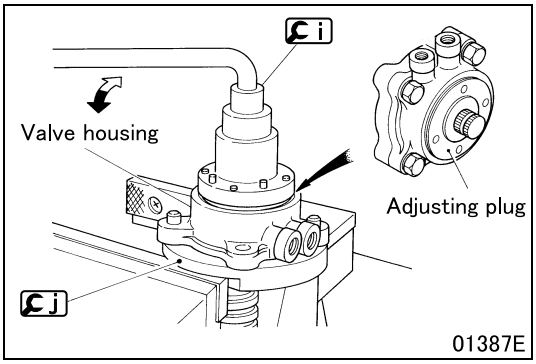

■ **Installation: Adjusting plug**

- Hold j with a vise and secure the valve housing to it.
- Tighten the adjusting plug to the specified torque using i, then back it up by approximately 180°.

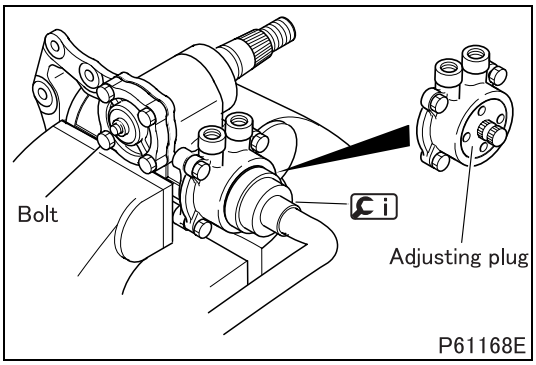

- Tighten bolt to the specified torque, then retighten the adjusting plug using i.

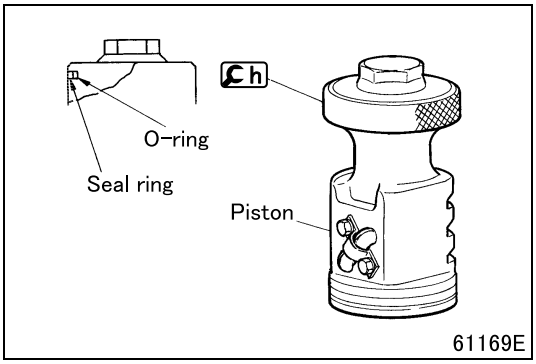

■ **Installation: Seal ring and O-ring**

- Install seal ring and O-ring in the outer surface grooves of the piston, and form the seal ring to fit in place using Ch.

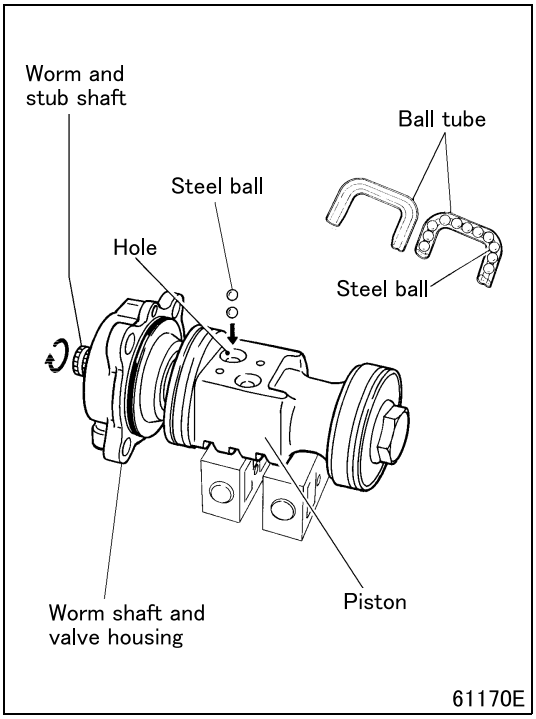

■ **Installation: Ball tube**

- Pack grease in one half of the ball tube, place 10 to 11 steel balls in it and put the other half upon it.
- Place the piston on a flat workbench, align the positions of the worm shaft and valve housing and piston ball race, then while turning the worn and stub shaft, let steel balls fall from the ball tube hole.
- Do not draw out the worm shaft and valve housing until its end passes over the ball tube hole during installation. Otherwise the steel balls will come out of the ball race.

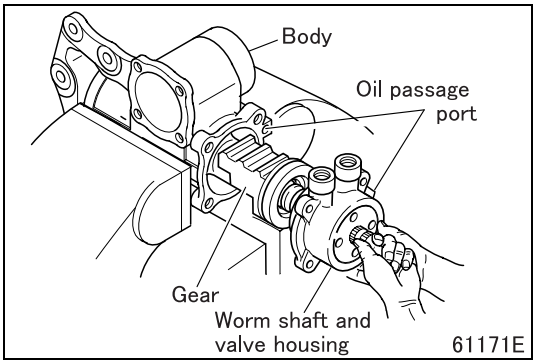

■ **Installation: Worm shaft and valve housing**

- Position the gear toothed portion of the worm shaft and valve housing in the illustrated direction so that it engages with the sector shaft.
- Install the worm shaft and valve housing to the body, lightly holding it with hand so that its gear portion does not turn out of position. When installing, align the oil passage ports of the worm shaft and valve housing and body.

CAUTION ⚠

- **Be careful not to damage the seal ring on the piston and the inner surface of the body.**

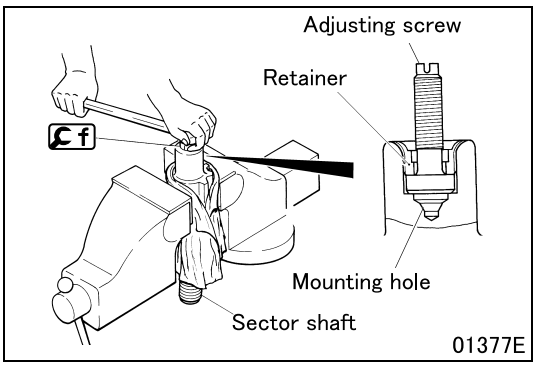

■ **Installation: Retainer**

- Pack grease in the adjusting screw mounting hole on the sector shaft.
- Install the adjusting screw into the sector shaft.
- Using f, tighten the retainer into place in the sector shaft.
- Back up the retainer by 180°, retighten it to a torque of 39 N·m {29 ft.lbs, 4 kgf·m}, then back it up again by 20°.
- Check that the adjusting screw turns smoothly.

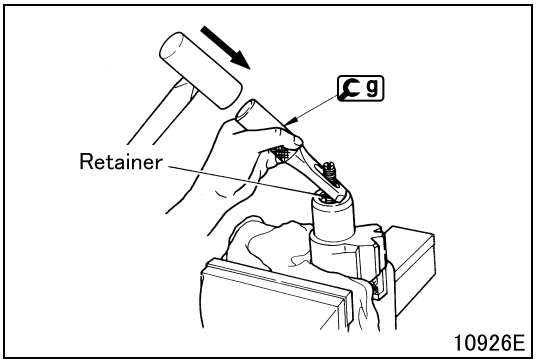

- Using g, crimp the retainer at two places.

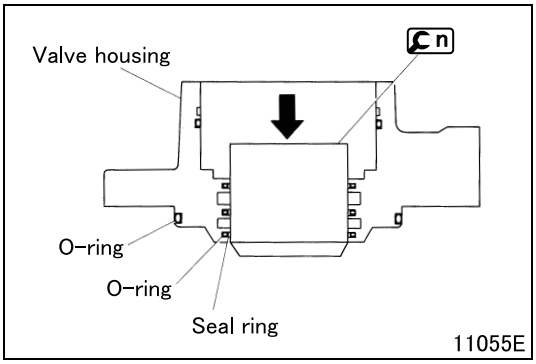

■ **Installation: Seal ring and O-rings**

- Install seal ring and O-rings to the valve housing.
- Form seal ring to fit the valve housing using n.

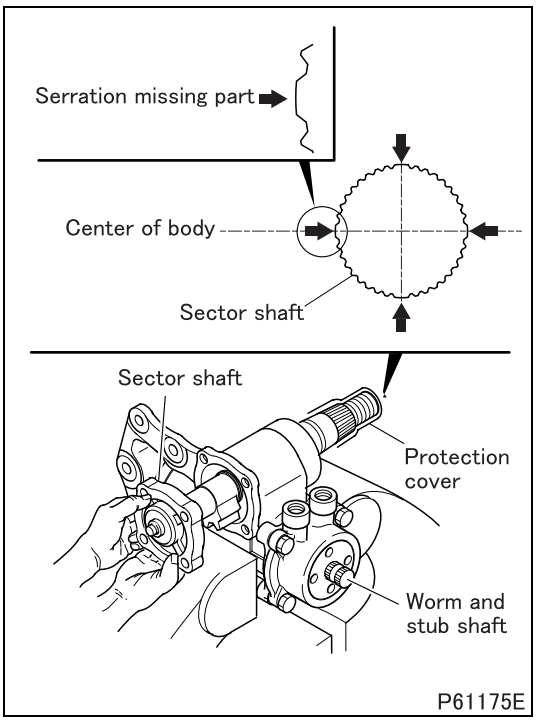

■ **Installation: Sector shaft**

- Set the sector shaft in the neutral position and install it into the body.
- When installing the sector shaft, cover up its threaded end and serration portions for protection.
- Turn the worm and stub shaft to check that it makes roughly five turns lock to lock.
- If the number of turns is less, check engagement of the worm and stub shaft with the sector shaft, and correct if necessary.

◆Adjustment after installation◆

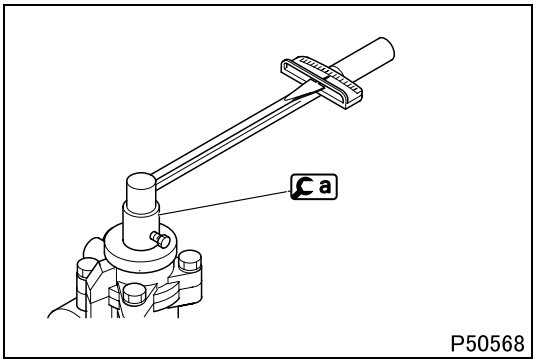

■ **Inspection: Starting torque**

[Inspection]

- Using a, measure the starting torque of the power steering gear assembly in the same manner as the measurement before removal. If the measurement deviates from the standard value, adjust the power steering gear assembly for proper starting torque or replace.

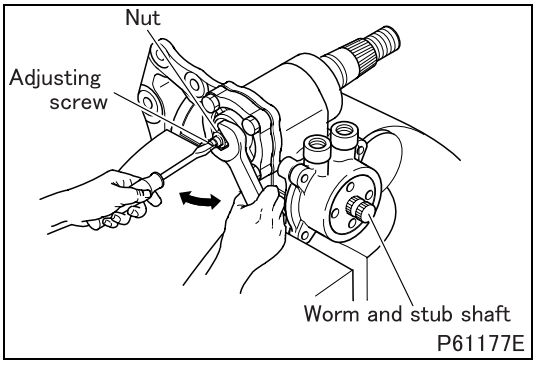

[Adjustment]

- Loosen nut.
- Rotating the worm and stub shaft approximately 1/4 turns left and right, make adjustment for proper starting torque with the adjusting screw.

POWER STEERING OIL PUMP <KYB Product>

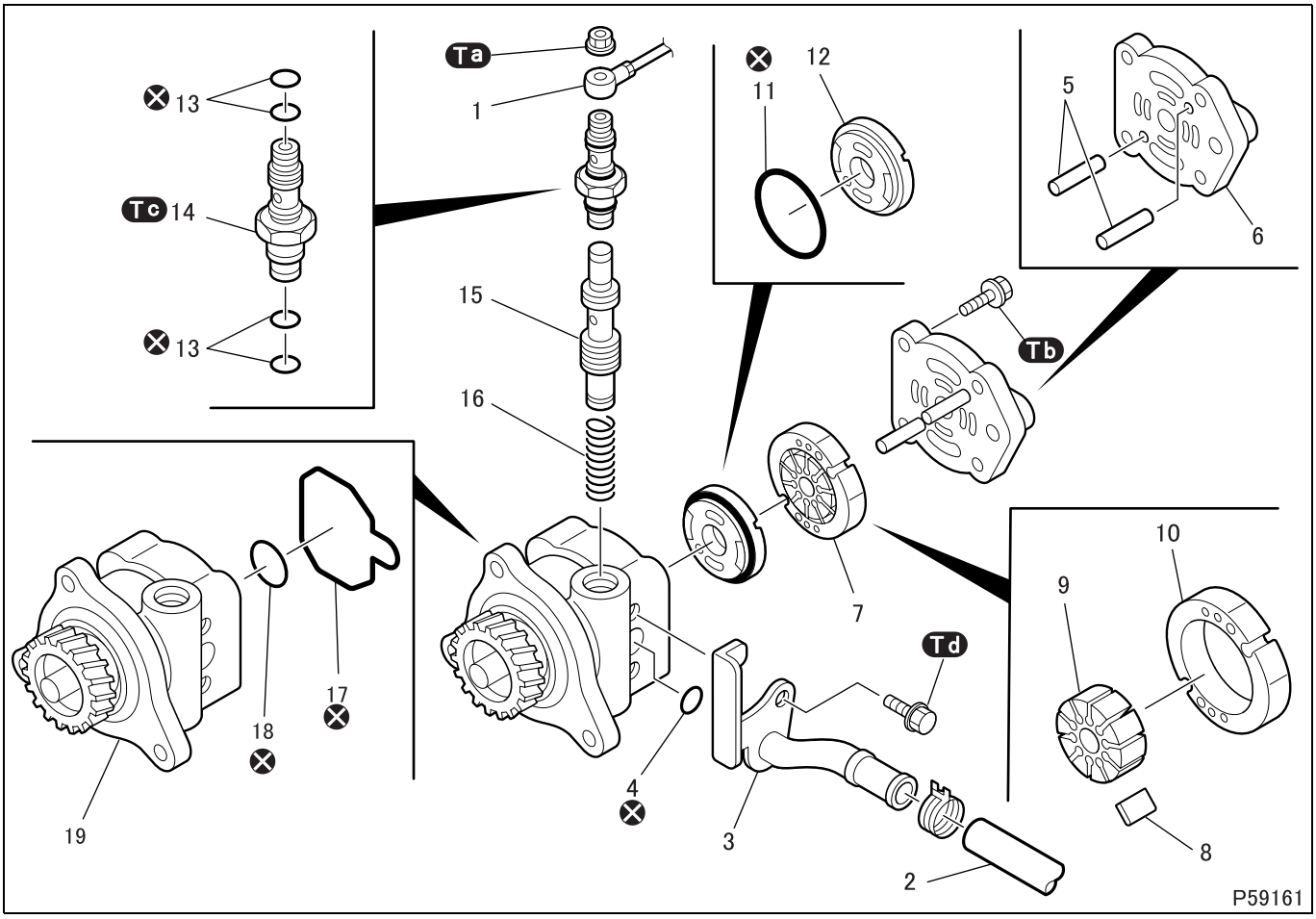

● **Disassembly sequence**

1 Pipe
2 Hose
3 Suction connector
4 O-ring
5 Pin
6 Cover
7 Cartridge assembly
8 Vane
9 Rotor
10 Cam ring
11 O-ring
12 Side plate
13 O-ring
14 Connector
15 Flow control valve
16 Flow control spring
17 O-ring
18 O-ring
19 Body

⊗: Non-reusable parts

- Do not attempt to disassemble the flow control valve and body because they are of unit construction.
- See Gr11 for removal and installation of the power steering oil pump.

● **Assembly sequence**

Follow the disassembly sequence in reverse.

Repair kit: Seal repair kit

Service standards (Unit: mm {in.})

Location	Maintenance item	Standard value	Limit	Remedy
6	Stepped wear on rotor and vane contact surfaces of cover	–	0.05 {0.0020}	Replace*
8, 9	Clearance between vane and rotor	0.01 {0.00039}	0.06 {0.0024}	Replace
12	Stepped wear on rotor and vane contact surfaces of side plate	–	0.05 {0.0020}	Replace*
15, 19	Clearance between flow control valve and body	0.01 to 0.02 {0.00039 to 0.00079}	0.03 {0.0012}	Replace*
16	Free length of flow control spring	36.5 {1.44}	33.5 {1.32}	Replace

*: Replace the power steering oil pump.

Tightening torque (Unit: N·m {ft.lbs, kgf·m})

Mark	Parts to be tightened	Tightening torque	Remarks
Ta	Nut (pipe mounting)	29.4 to 39.2 {22 to 29, 3 to 4}	–
Tb	Bolt (cover mounting)	18 to 22 {13 to 16, 1.8 to 2.2}	–
Tc	Connector	49 to 69 {36 to 51, 5.0 to 7.0}	–
Td	Bolt (suction connector mounting)	7.8 to 11.8 {5.8 to 8.7, 0.8 to 1.2}	–

◆Inspection procedure◆

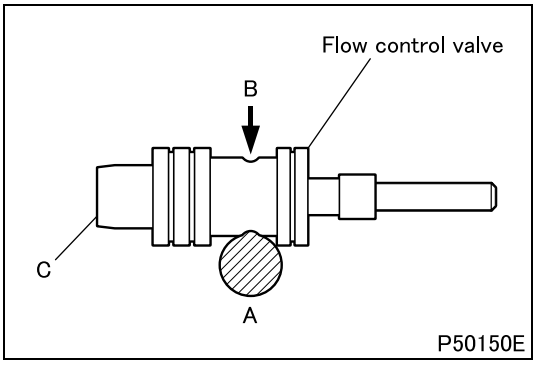

■ Inspection: Flow control valve

- Cover port A of the flow control valve with a finger.
- Apply air pressure (390 to 490 kPa {57 to 71 psi, 4.0 to 5.0 kgf/cm^2}) to port B.
- Check for a leak of air from port C.
- If there is an air leakage, replace the power steering oil pump.

◆Installation procedure◆

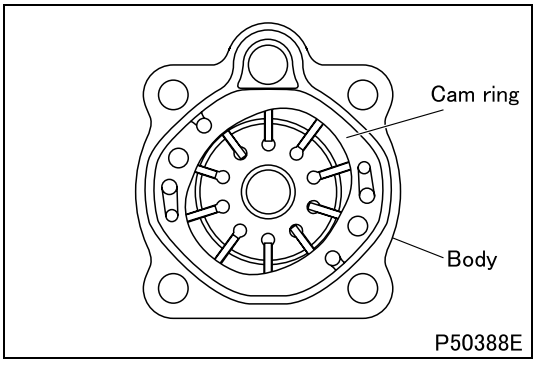

■ Installation: Cam ring

- Install the cam ring in the illustrated direction to the body.

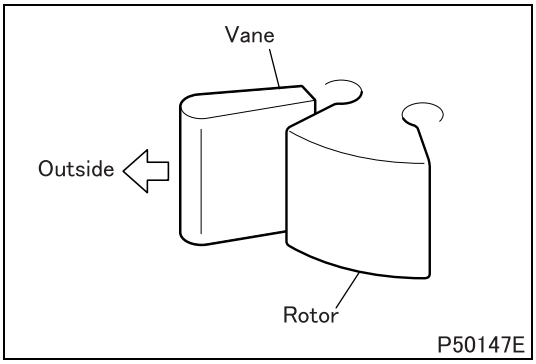

■ **Installation: Vane**

- Fit the vane into the rotor, with its round edge facing toward outside.

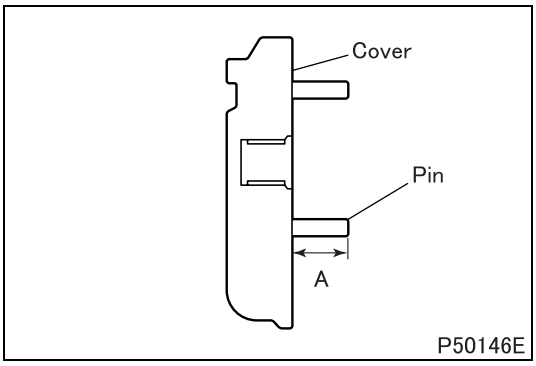

■ **Installation: Pin**

- Fit the pins into the cover so that they protrude to the illustrated length A from the cover.
  A: 18.1 mm {0.71 in.}

M E M O

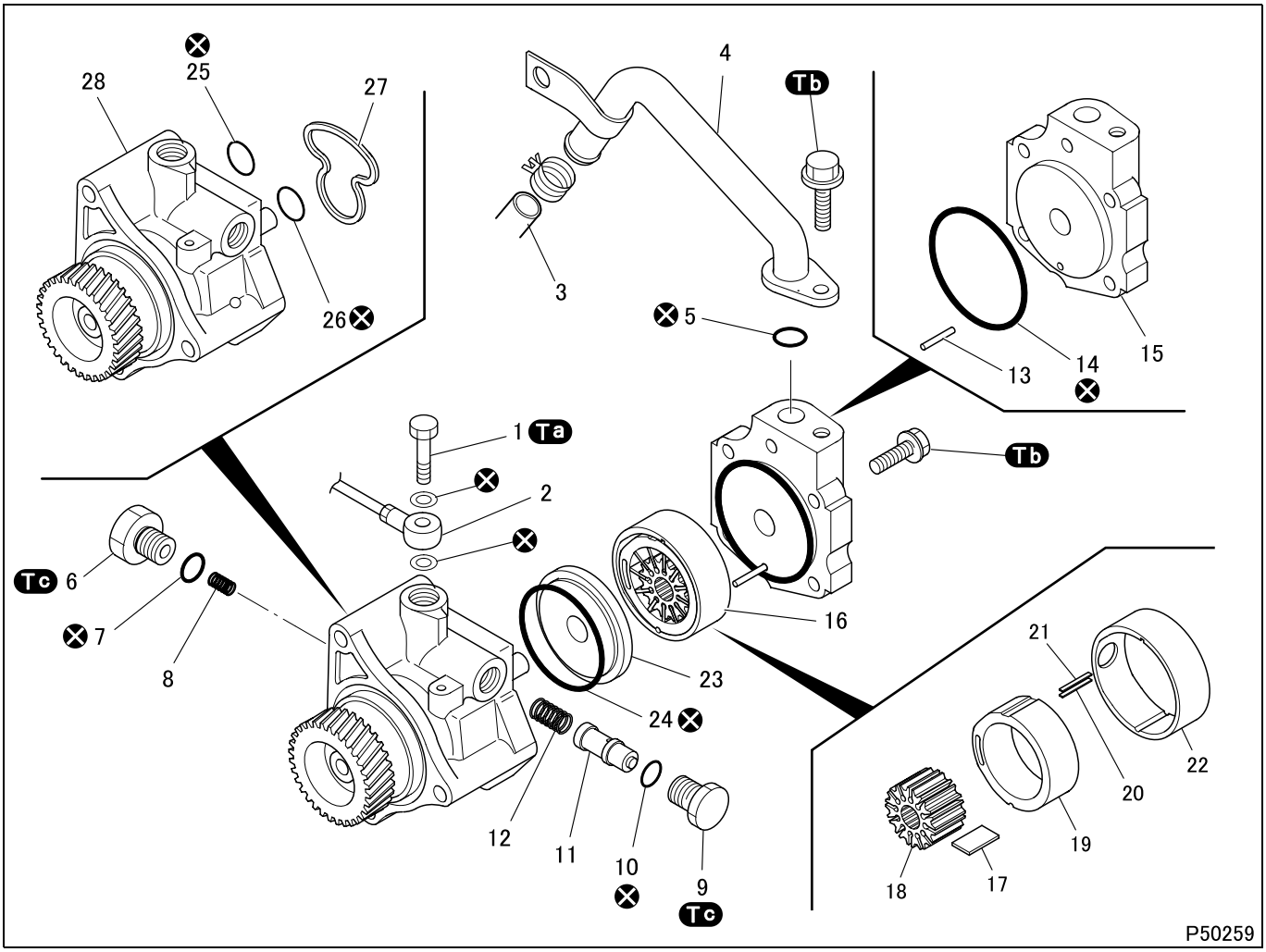

● **Disassembly sequence**

1 Eyebolt
2 Pipe
3 Hose
4 Suction connector
5 O-ring
6 Plug
7 O-ring
8 Spring
9 Plug
10 O-ring
11 Control valve
12 Control valve spring
13 Straight pin
14 O-ring
15 Rear body
16 Cartridge assembly
17 Vane
18 Rotor
19 Cam ring
20 Seal
21 Rubber spring
22 Adapter
23 Pressure plate
24 O-ring
25 O-ring
26 O-ring
27 Seal ring
28 Front body

⊗: Non-reusable parts

CAUTION ⚠

- **If the cartridge assembly is difficult to disassemble, do not attempt to pry it out but heat the side surface of the front body with a dryer.**

- Do not attempt to disassemble the control valve and front body because they are of unit construction.
- See Gr11 for removal and installation of the power steering oil pump.

● Assembly sequence

Follow the disassembly sequence in reverse.

Repair kit: Repair kit

Service standards (Unit: mm {in.})

Location	Maintenance item	Standard value	Limit	Remedy
8	Free length of spring	24 {0.94}	23 {0.91}	Replace
11, 28	Clearance between control valve and front body	0.02 {0.00079}	0.03 {0.0012}	Replace*
12	Free length of control valve spring	26.2 {1.03}	23.6 {0.93}	Replace
15	Stepped wear on rotor and vane contact surfaces of rear body	–	0.01 {0.00039}	Replace*
17, 18	Clearance between vane and rotor	0.02 {0.00079}	0.03 {0.0012}	Replace
23	Stepped wear on rotor and vane contact surfaces of pressure plate	–	0.01 {0.00039}	Replace*

*: Replace the power steering oil pump.

Tightening torque (Unit: N·m {ft.lbs, kgf·m})

Mark	Parts to be tightened	Tightening torque	Remarks
Ta	Eyebolt (pipe mounting)	49.0 to 63.7 {36 to 47, 5.0 to 6.5}	–
Tb	Bolt (suction connector mounting)	17.7 to 24.5 {13 to 18, 1.8 to 2.5}	–
	Bolt (rear body mounting)		
Tc	Plug	29.4 to 39.2 {22 to 29, 3.0 to 4.0}	–

◆Inspection procedure◆

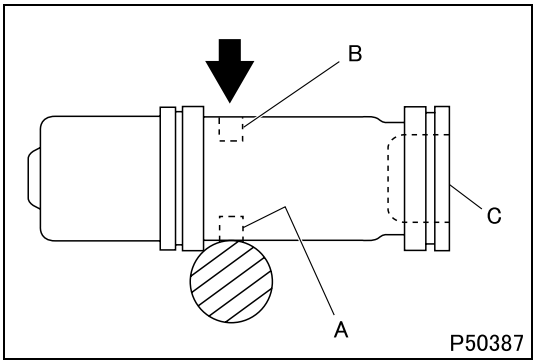

■ Inspection: Control valve

- Cover port A of the control valve with a finger.
- Apply air pressure (390 to 490 kPa {57 to 71 psi, 4.0 to 5.0 kgf/cm^2}) to port B.
- Check for a leak of air from port C.
- If there is an air leakage, replace the control valve.

◆Installation procedure◆

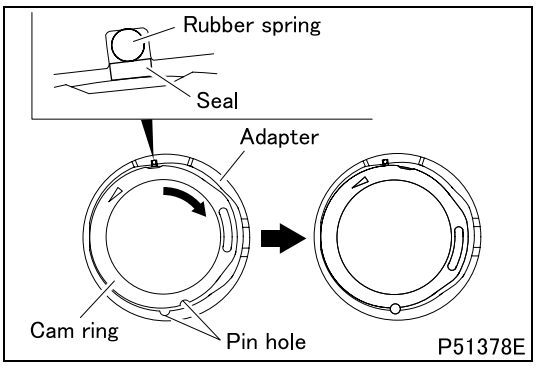

■ Installation: Seal and rubber spring

- Align the peripheral groove of the cam ring to the inner groove of the adapter, then fit the rubber spring (black) into the adapter and the seal (white) into the cam ring.
- Turn the cam ring clockwise to align pin holes.

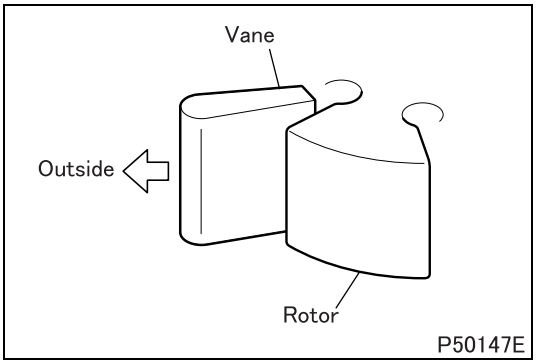

■ **Installation: Vane**

- Fit the vane into the rotor, with its round edge facing toward outside.

M E M O

POWER STEERING OIL TANK

<FE (Except FE84DHW, FE85)>

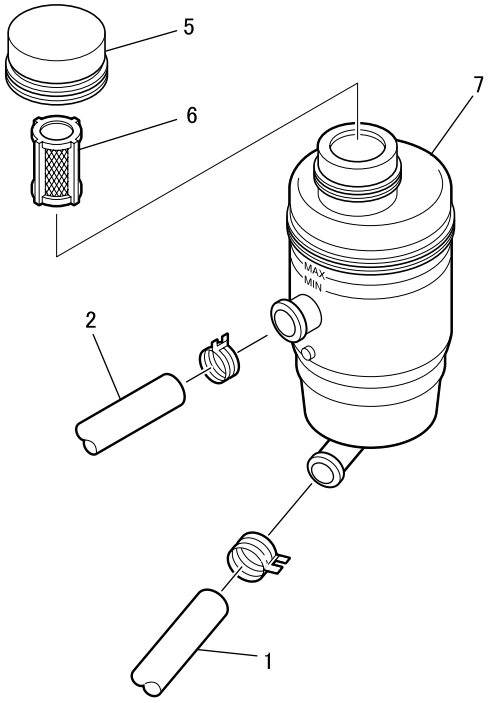

<FE84DHW>

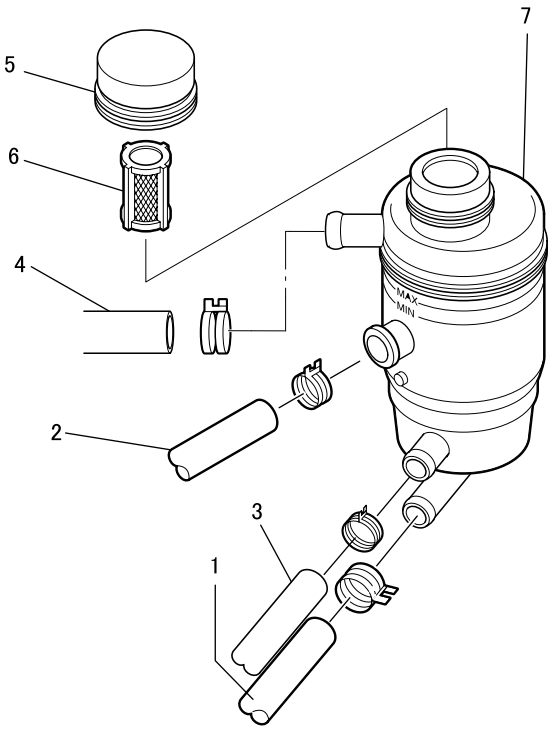

<FE85>

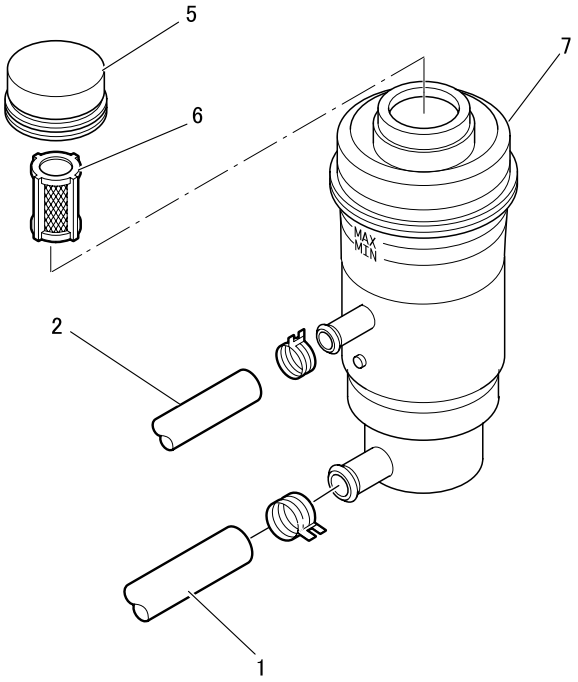

<FG>

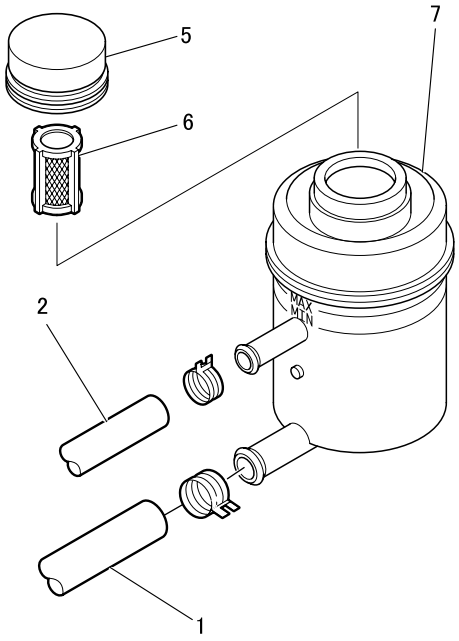

P103248E

● **Disassembly sequence**

1 Supply hose
2 Return hose
3 Hose <FE84DHWSL for oil gauge>
4 Hose <FE84DHWSL for oil gauge>
5 Cap
6 Strainer
7 Body

● **Assembly sequence**

Follow the disassembly sequence in reverse.

Group 41

Bumper And Frame

Table of Contents

Back

Home

MITSUBISHI FUSO TRUCK OF AMERICA, Inc.

Pub.No.TWSE0713-41

INDEX

SPECIFICATIONS 41-2

STRUCTURE AND OPERATION 41-3

FRONT BUMPER 41-4

FRAME 41-6

SPECIFICATIONS

Item	Specifications	
	Except 4WD	4WD
Frame type	Ladder type	
Cross section configuration of side rail	⊐ shaped (open) channel section	

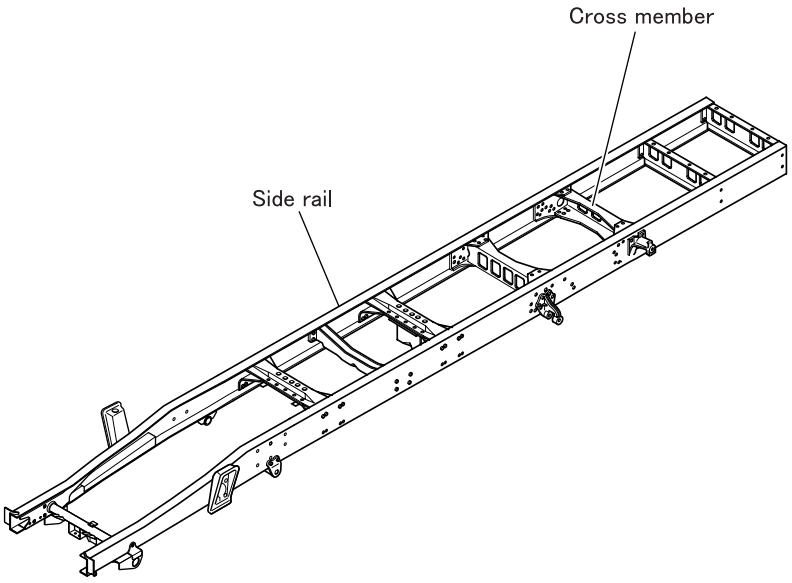

P67917E

- The frame has cross members fastened to the web of side rails (lateral linkage) so that stress on the joints is very small. This allows joint rivets to maintain tightness and ensures long-lasting high torsional stiffness.
- Unlike vertical linkage where cross members are fastened to the flange of side rails, no rivets appear on top of the frame, making the body mounting greatly easier.

FRONT BUMPER

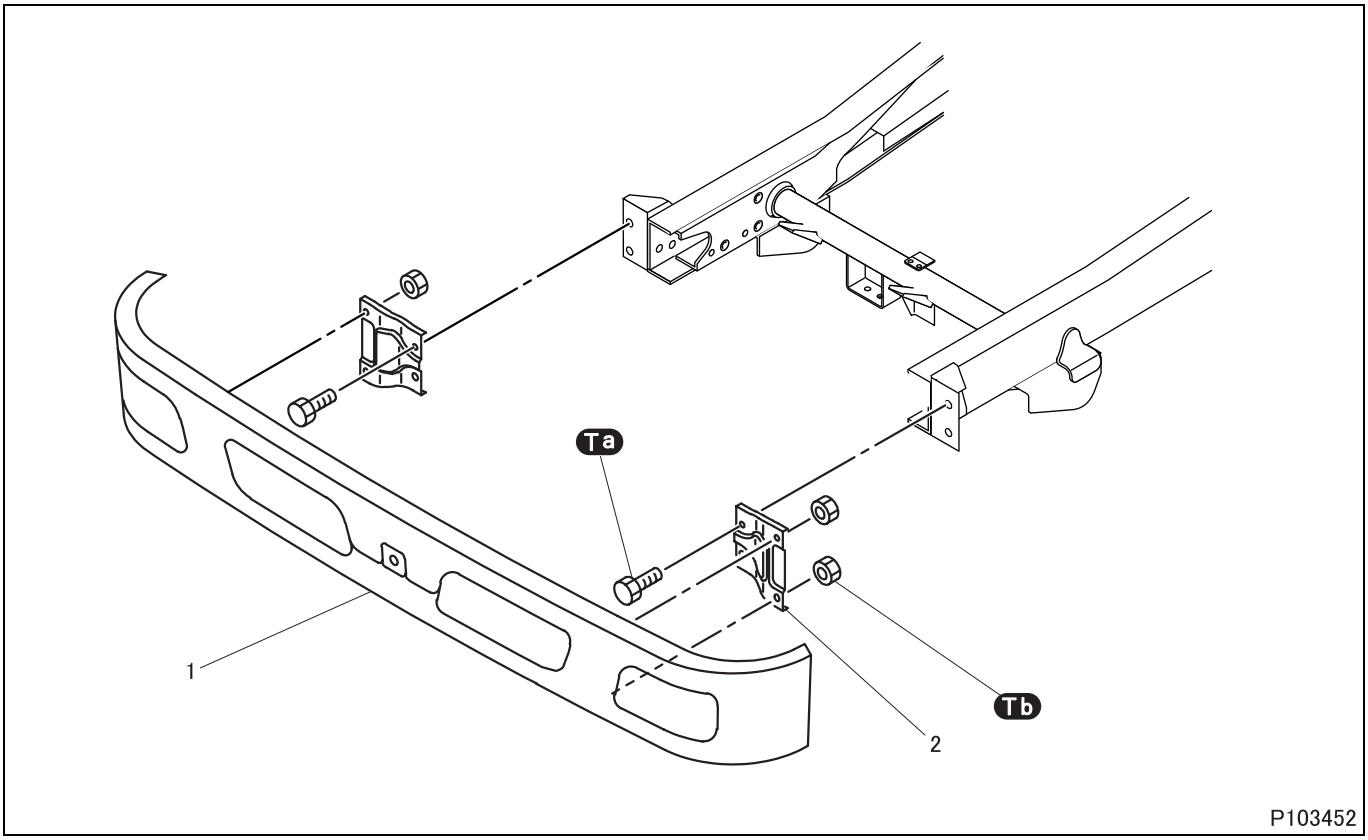

● **Removal sequence**

1 Front bumper
2 Bumper stay

● **Installation sequence**

Follow the removal sequence in reverse.

Tightening torque (Unit: N·m {ft.lbs, kgf·m})

Mark	Parts to be tightened	Tightening torque	Remarks
Ta	Bolt (bumper stay mounting)	45 to 54 {33 to 40, 4.6 to 5.5}	–
Tb	Nut (front bumper mounting)	26 to 31 {19 to 23, 2.7 to 3.2}	–

◆**Installation procedure**◆

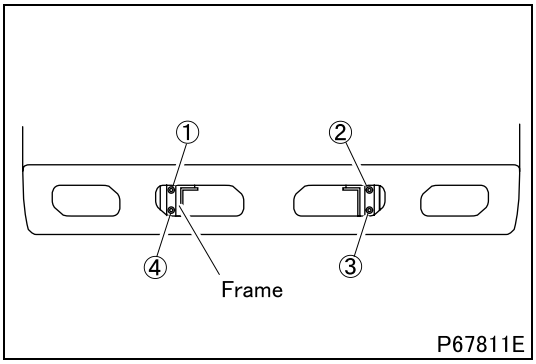

■ **Installation: Bumper stay**

- Install the bumper stay on the frame by tightening the bolts (four places) to the specified torque in the order of the numbers (1 to 4) indicated in the illustration.

M E M O

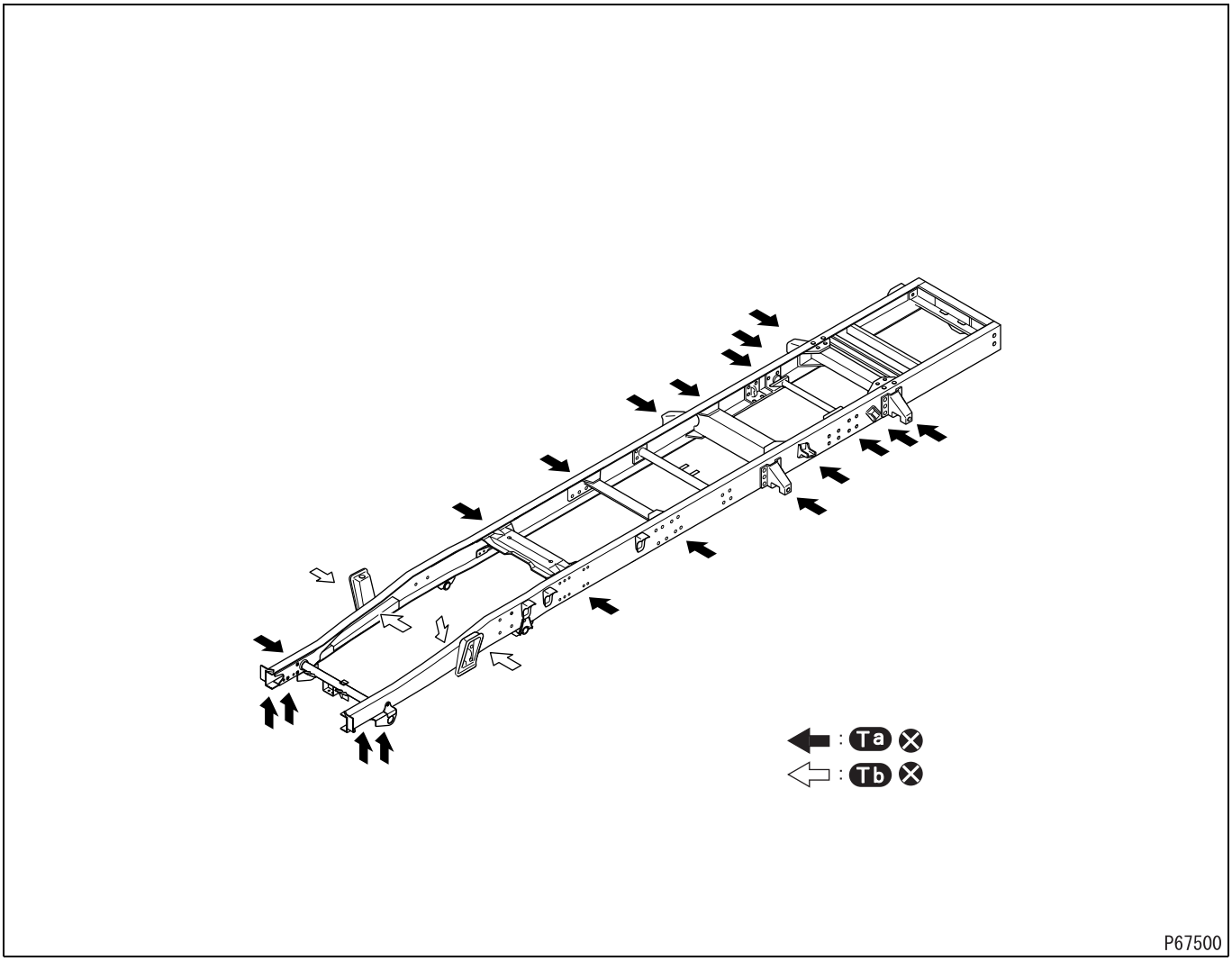

⊗: Non-reusable parts

CAUTION ⚠

- **Since the mounting bolts and nuts are tightened by a torque-to-yield method, they must not be reused.**

Tightening torque (Unit: N·m {ft.lbs, kgf·m})

Mark	Parts to be tightened	Tightening torque	Remarks
Ta	M10 bolt or nut	60 to 80 {43 to 58, 6 to 8}	–
Tb	M12 bolt or nut	98 to 120 {72 to 87, 10 to 12}	–

◆Cleaning procedure◆

■ Cleaning: Frame

- Thoroughly remove mud, grease, rust etc. from the outer and inner surfaces of the frame.

◆Inspection procedure◆

■ Inspection: Frame

(1) Inspection for deformation

- If deformation or any other defect is found, repair the frame.

(2) Inspection for cracks

- Remove paint from suspected areas and carefully inspect exposed surfaces for cracks.
- If visual inspection is difficult, perform dye check or any other suitable examination.

  If a crack is found, repair as follows.

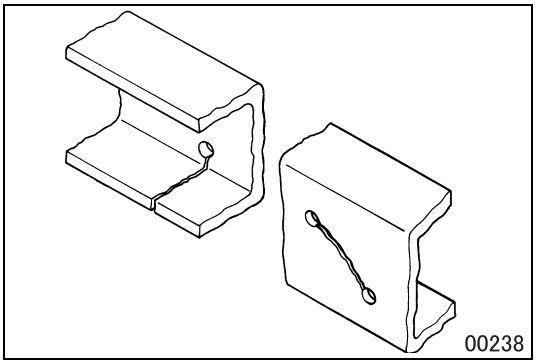

(3) Repair of crack in frame

- With the vehicle unloaded, level the frame.
- Drill a hole, roughly twice the thickness of frame plate in diameter, 10 mm {0.39 in.} from the inside end of crack.

NOTE

- **If crack is within the frame plate, drill holes at both ends of the crack.**

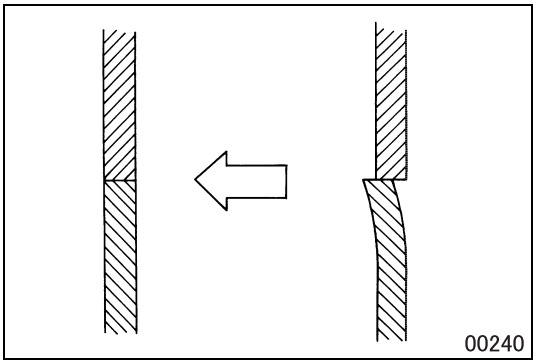

- If the edges of crack are uneven, make them even.

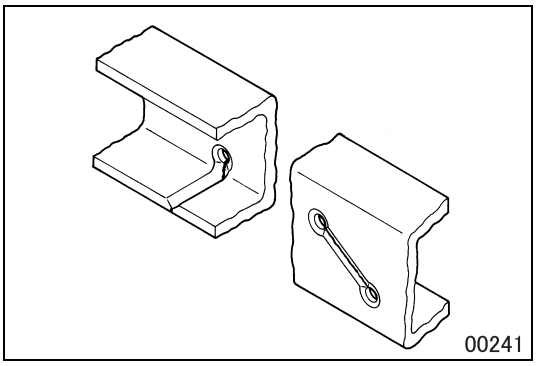

- Using a grinder, cut a 90° V-channel at the crack to a depth of approximately 2/3 of the frame plate thickness, then fill the channel with filler metal by welding.

CAUTION ⚠

- **Avoid gas welding because heat embrittles the material of welded area. Be sure to use electric welding.**
- **Electric welding could allow the welding current to reverse through ground circuit and burn electrical components. To prevent this, be sure to disconnect negative cable from the battery and ground the welding machine at a point near the weld zone before work.**
- **For electric welding, follow other precautions given elsewhere.**
- **If there are any combustibles, such as pipeline, wiring harness, rubber part and fuel tank, near the weld zone, be sure to cover them for protection.**
- **Use low-hydrogen type coated CO_2 and arc welding electrodes for welding and check that there are not harmful defects such as undercut and blow hole after welding.**
- **Preheat the area around weld zone to approximately 50 to 350°C {120 to 660°F} before welding when the workshop temperature is below 0°C {32°F}.**
- **Be sure to protect mountings that may be affected by heat, such as main sills, using heat insulators or the like.**

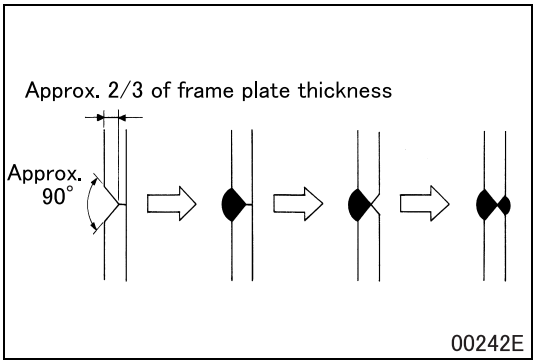

- Then, make a similar V-channel on the opposite side of the weld and fill it with filler metal by electric welding as well. At the same time, deposit metal to cover up the hole or holes at both ends of the crack by welding.

NOTE

- **In cold districts, heat the weld zone to approximately 200°C {390°F} after welding.**

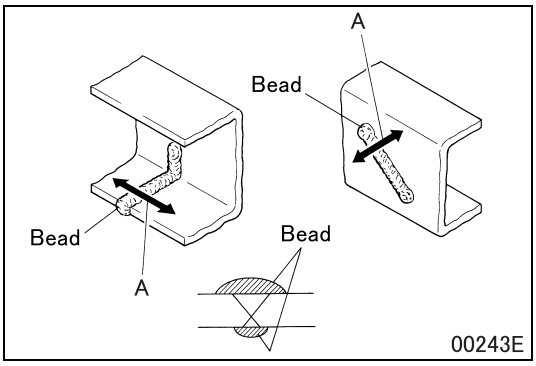

- After welding, run a grinder over the bead at right angles A to remove the hatched portion from the weld on each side of the plate.
- Finish the ground surfaces flat to a thickness equal to the original plate thickness.

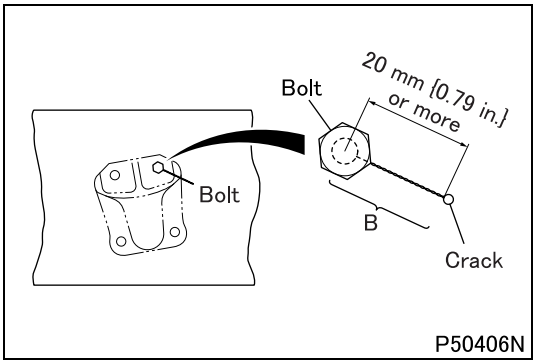

[Repairing crack from rivet or bolt hole]

- To make the edges of cracked hole even, temporarily tighten bolt in the hole.
- First weld to close the crack at a point at least 20 mm {0.79 in.} apart from the center of the bolt.
  For this welding, refer to the aforementioned welding procedures for crack repair.
- Remove the temporary bolt. After making hole edges even, weld to close the rest B of the crack. Fill the hole with weld metal at the same time.
- Drill a hole at the location of original hole, and install a rivet or bolt in it.

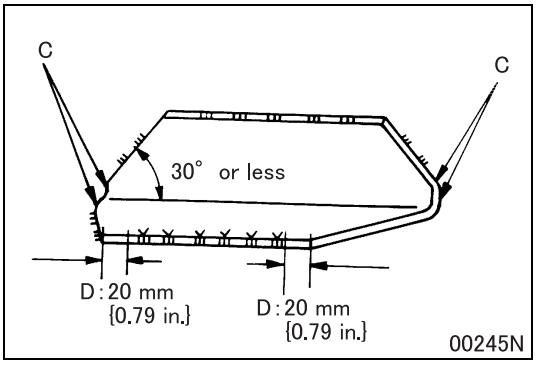

[Repairing using reinforcement plate]

- To prevent the concentration of welding stress at both ends C of the reinforcement plate, cut the ends at a bevel of 30° or less for welding. Do not weld at points D.
- The reinforcement plate must have enough to cover the cracked area.

NOTE

- **Reinforcement plate thickness: Equal to frame plate thickness**
- **Reinforcement plate material: As specified below or equivalent**

SAPH440 (Hot rolled steel for automobiles), or SS400 (Rolled steel for general structures)

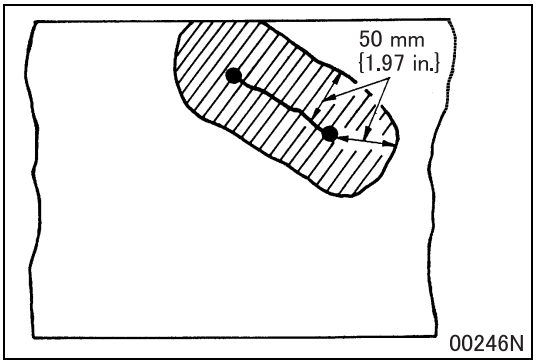

- After welding, heat the hatched area to 600 to 700°C {1110 to 1292°F}.

CAUTION ⚠

- **Be sure to protect mountings that may be affected by heat, such as main sills, using heat insulators or the like.**

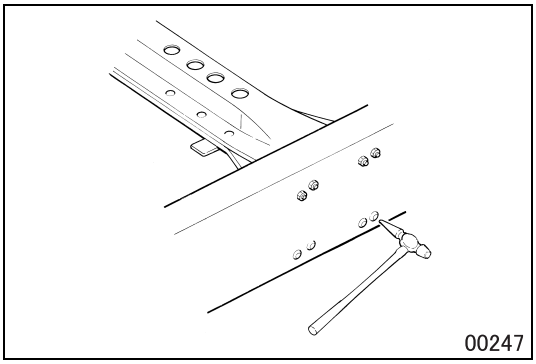

(4) Inspection of rivets for looseness

- Lightly tap the head of each rivet using an inspection hammer and feel or listen for the echo to determine if the rivet is loose.
- Rusting between rivet and frame plate is an indication of loosened rivet.

CAUTION ⚠

- **Be sure to replace loose rivets. They could break off or allow cracks to develop from the rivet holes, leading to an accident.**

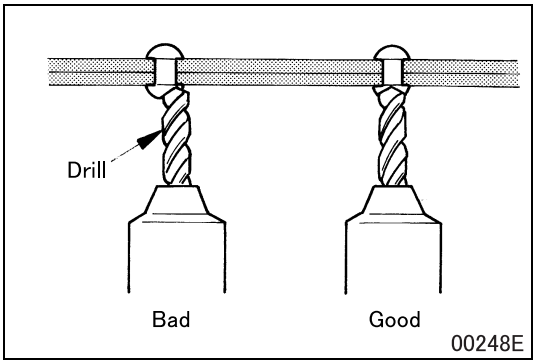

(5) Replacement of rivet

- To remove a loosened rivet, eliminate its head using a drill or grinder. When a drill is used, make a dent in the middle of the rivet's head and align the drill bit to the dent as shown.

NOTE

- **The rivet hole must be intact.**

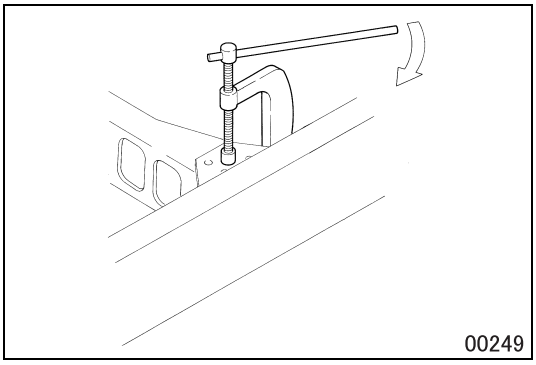

- Before rivetting, clamp the two plates closely together near the rivet hole using a C vice.
- Using a rivetting machine, drive the rivet (cold rivet) into the rivet hole.
- If rivetting is impracticable, ream the rivet hole, drive a reamer bolt in the hole, fully tighten the nut, then weld it in place.
  As the reamer bolt and nut, use a flange bolt and a flange nut.

(6) Inspection of bolts and nuts for looseness

- Inspect the bolts attaching cross members to the side rails for looseness. If any loose bolt is found, retighten it to specified torque.

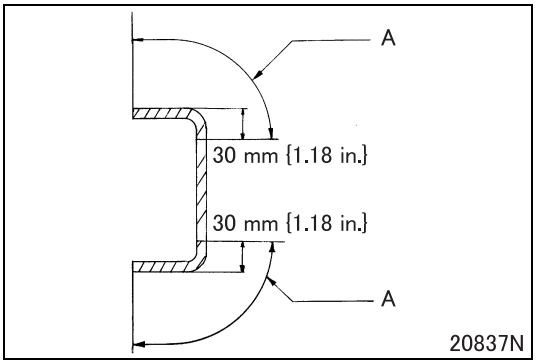

(7) Drilling hole in frame

- When drilling holes in the frame becomes necessary, perform it using care in the following respects.

CAUTION ⚠

- **When drilling holes in the side rail, avoid the illustrated ranges A to prevent cracking.**
- **Grind the edge of drilled hole smooth.**
- **Avoid drilling a hole in the vicinity of a point where the rigidity of the side rail change sharply, such as an area near the joint to the cross member or an end of the stiffener.**
- **The diameter of drilled holes must be 11 mm {0.43 in} or smaller and the hole-to-hole distance must be 20 mm {0.79 in} or larger.**

Group 42

Cab

Table of Contents

Back

Home

MITSUBISHI FUSO TRUCK OF AMERICA, Inc.

Pub.No.TWSE0805-42

INDEX

SPECIFICATIONS 42-2

STRUCTURE AND OPERATION
1. Front Cab Mounting 42-3
2. Rear Cab Mounting <Except Crew Cab> 42-4
3. Center and Rear Cab Mountings <Crew Cab> 42-4
4. Cab Tilt Link <Except Crew Cab> 42-5

TROUBLESHOOTING 42-6

ON-VEHICLE INSPECTION AND ADJUSTMENT
1. Adjustment of Cab Tilt System <Except Crew Cab> 42-8

REMOVAL AND INSTALLATION OF CAB
<EXCEPT CREW CAB> 42-10
<CREW CAB> 42-14

FRONT CAB MOUNTING
<EXCEPT CREW CAB> 42-18
<CREW CAB> 42-20

REAR CAB MOUNTING <EXCEPT CREW CAB> 42-22

CENTER AND REAR CAB MOUNTINGS <CREW CAB> 42-23

CAB TILT LINK <EXCEPT CREW CAB> 42-24

CAB STAY <EXCEPT CREW CAB> 42-26

SPECIFICATIONS

Cab

Item	Specifications	
	Except crew cab	Crew cab
Type	Cab-over type (forward control type)	Cab-over crew cab type (forward control type)
Mass kg {lb}	410 {905}	630 {1390}

Cab Mounting

Item	Specifications		
	Except crew cab	Crew cab	
		Front cab mounting	Center and rear cab mounting
Type	Semi-floating type		Fixed type
Kind	Liquid-filled rubber cushioned mounting		Rubber cushioned mounting

Cab Tilt System <Except Crew Cab>

Item	Specifications
Type	Torsion bar type
Tilt angle	45°
Cab tilt lock	Manually operated hook type

1. Front Cab Mounting

<Except crew cab>

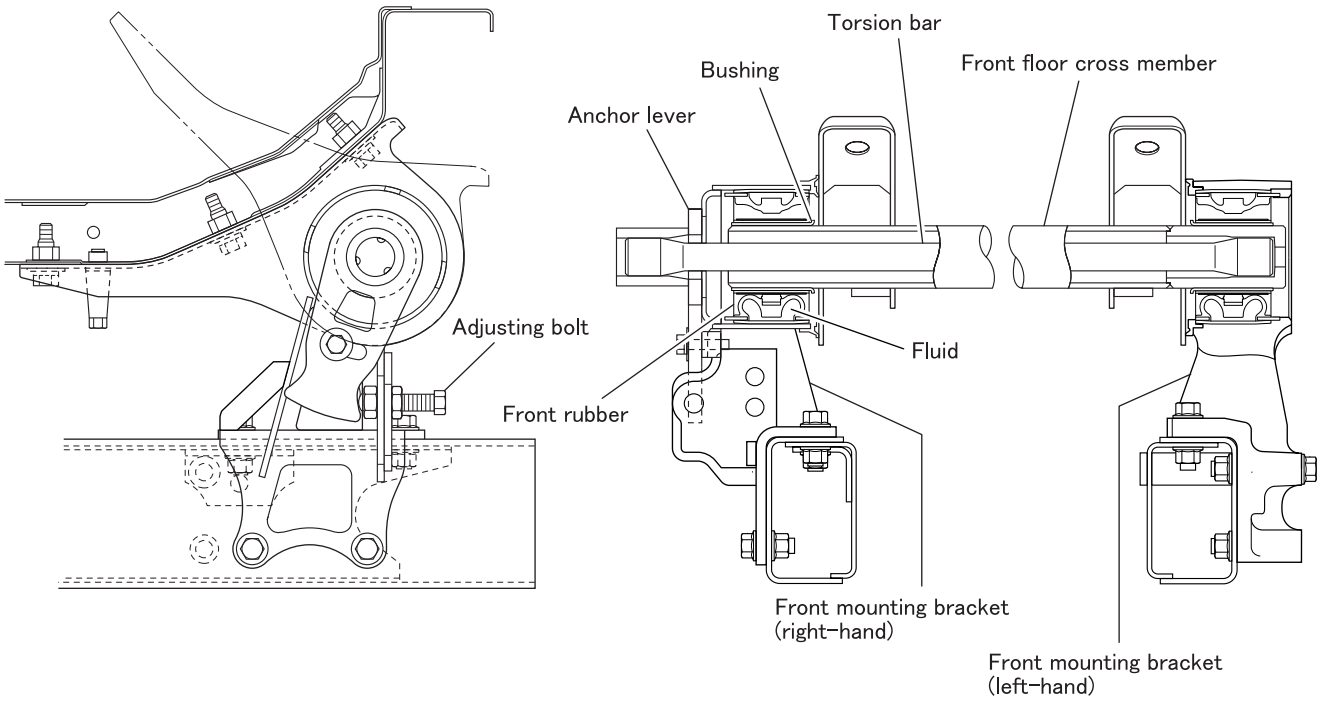

P58035E

<Crew cab>

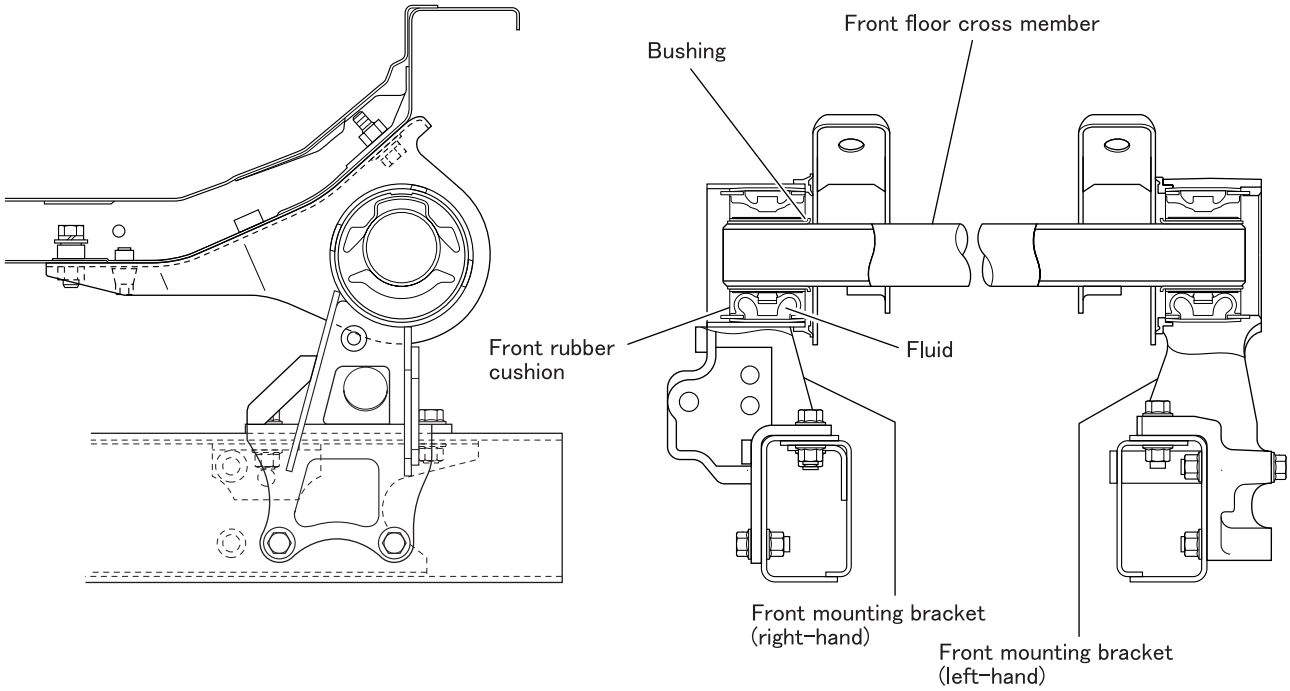

P58036E

- The operating physical force for the cab tilt system can be adjusted using the adjusting bolt of the front mounting bracket. <Except crew cab>
- The front rubber cushion reduces the vibration and noise of the cab.

2. Rear Cab Mounting <Except Crew Cab>

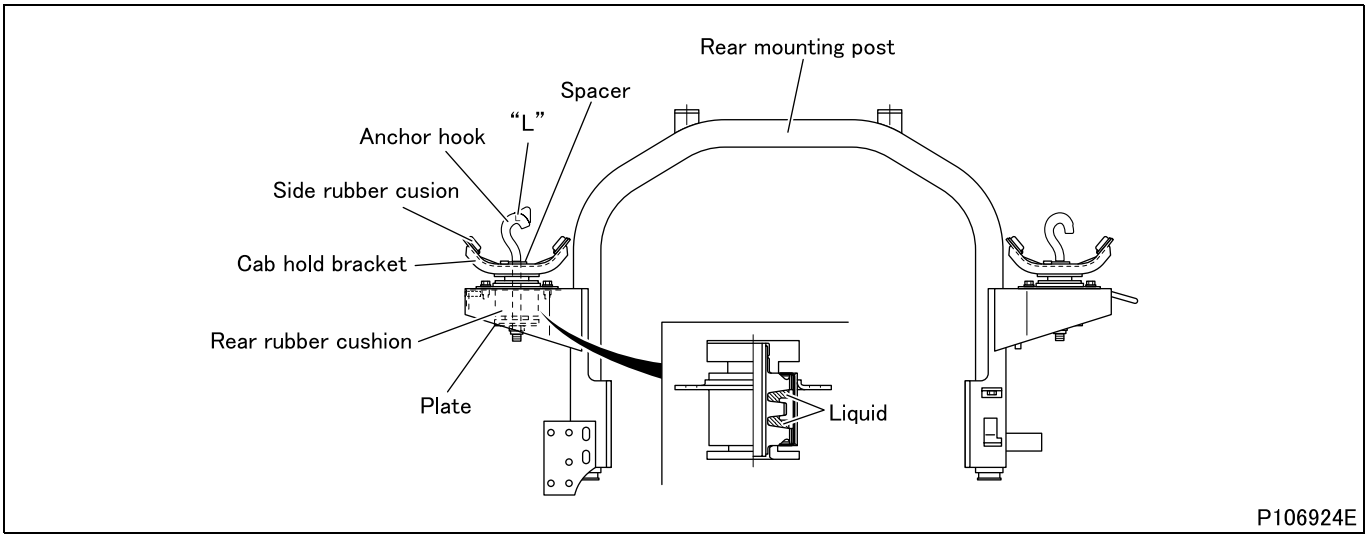

- The operating physical force for the lock handle can be adjusted by increasing and decreasing the number of spacers provided between anchor hook and cab hold bracket.
- Rear mounting upper and lower rubber cushions reduce the vibration and noise of the cab.

3. Center and Rear Cab Mountings <Crew Cab>

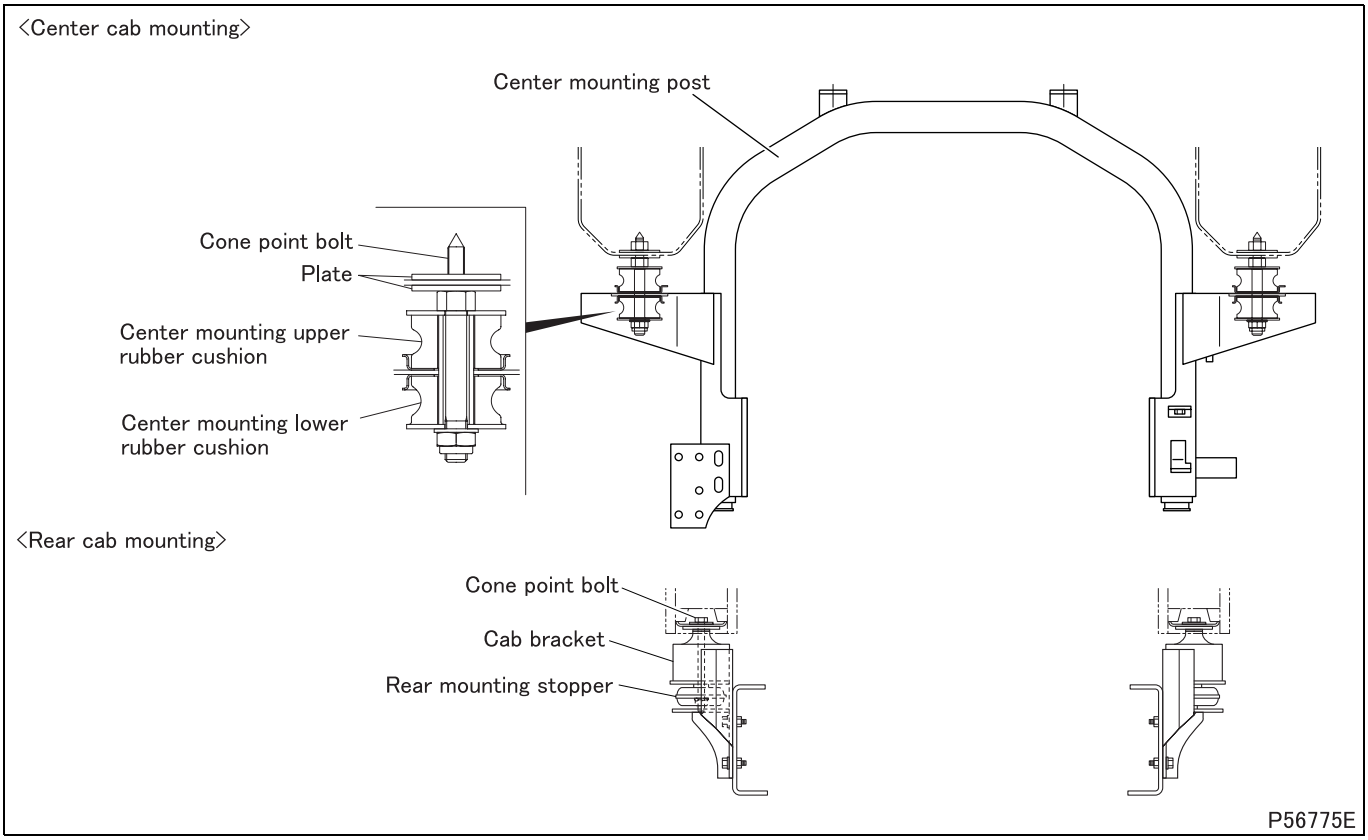

- Center mounting upper and lower rubber cushions reduce the vibration and noise of the cab.

4. Cab Tilt Link <Except Crew Cab>

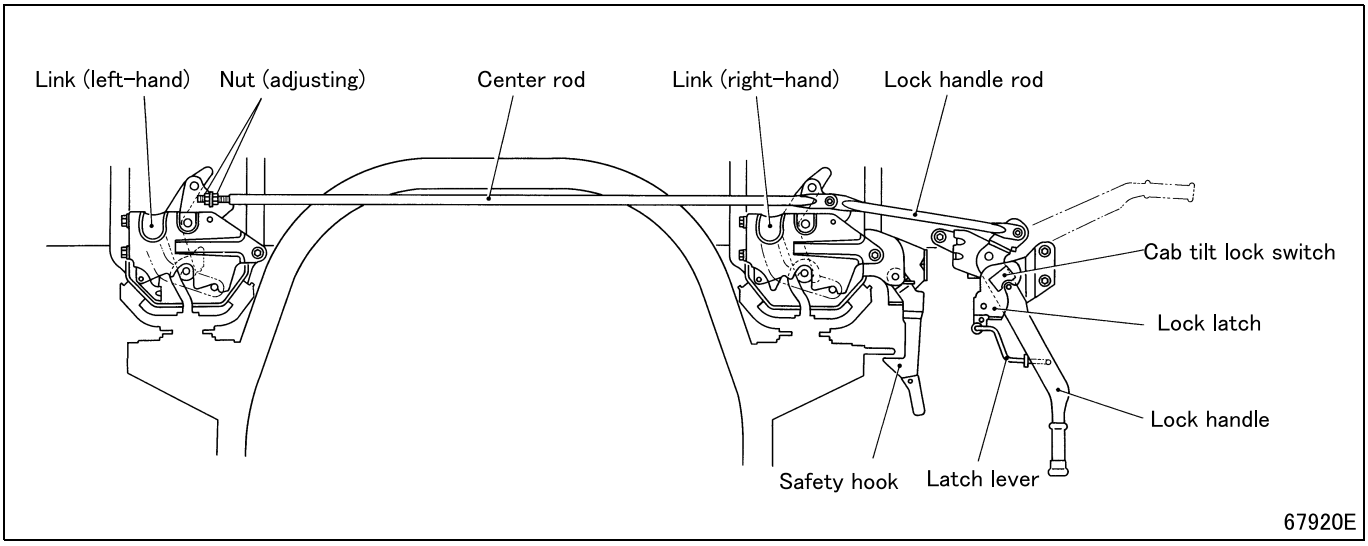

- The length of center rod is adjustable with the adjusting nut.
- The cab tilt lock switch of the manual cab tilt system monitors the locking status of the lock handle.

Cabs in general

Possible causes \ Symptoms			Cab shimmy (vibration with pitching and rolling)	High-frequency vibration (above 20Hz) and noise in cab and steering wheel	Reference Gr
Cab-related problems	Front cab mounting	Front mounting bracket loose, play	O		
		Sagging of front rubber cushion		O	
	Center or rear cab mounting	Sagging of mounting rubber cushion		O	
	Cab improperly mounted			O	
Engine-related problems		Propeller shaft inclination angle excessive due to increased tilt angle caused by deteriorated engine mounting		O	Gr11
		Engine improperly mounted		O	
		Intake and exhaust system components improperly installed		O	Gr15
Transmission-related problem		Transmission improperly mounted		O	Gr22
Propeller shaft-related problems		Propeller shaft runout excessive		O	Gr25
		Universal joint excessively worn		O	
		Backlash excessive at slip yoke joint		O	
		Center bearing play excessive		O	
		Angle at propeller shaft joint excessive due to deteriorated center bearing rubber cushions or other causes		O	
		Angle at propeller shaft joint excessive due to increased tilt of drive axle caused by overloading		O	
Front axle-related problem		Sympathetic vibrations from axle seat	O		Gr26
Rear axle-related problems		Reduction gears in poor mesh		O	Gr27
		Differential gears in poor mesh		O	
Wheel and tire-related problems		Wheel and tire runout excessive	O		Gr31
		Wheels and tires out of balance	O		
		Use of tires different in size or type	O		
		Wheel mounting surface deformed	O		
Front suspension-related problem		Friction excessive between spring leaves	O		Gr33
Brake-related problems		Brake drum out of balance <Drum brake>	O		Gr26B, 27
		Brake drum eccentric <Drum brake>	O		
		Disc brake rotor runout <Disc brake>	O		Gr26A, 27

Manual cab tilt system

Symptoms / Possible causes	Cab fails to tilt up.	Cab cannot lock on rear mounting post.	Cab tilt warning lamp fails to come on.	Cab tilt warning lamp fails to go out.	Reference Gr
Main hook not released	O				
Safety hook not released	O				
Torsion bar damaged or fatigued	O				
Main hook does not engage with hook pin bracket		O			
Cab tilt lock switch poorly adjusted			O	O	
Cab tilt lock switch faulty			O	O	
Cab tilt warning lamp faulty			O		
Fuse or high current fuse blown			O		
Wiring open-circuited or improperly connected			O		

ON-VEHICLE INSPECTION AND ADJUSTMENT

1. Adjustment of Cab Tilt System <Except Crew Cab>

Tightening torque (Unit: N·m {ft.lbs, kgf·m})

Mark	Parts to be tightened	Tightening torque	Remarks
–	Lock nut (anchor hook fitting)	83 to 98 {61 to 72, 8.5 to 10}	–

Lubricant and/or sealant

Mark	Points of application	Specified lubricant and/or sealant	Quantity
–	Sliding contact surfaces of lock handle and link	Chassis grease [NLGI No. 1 (Li soap)]	As required

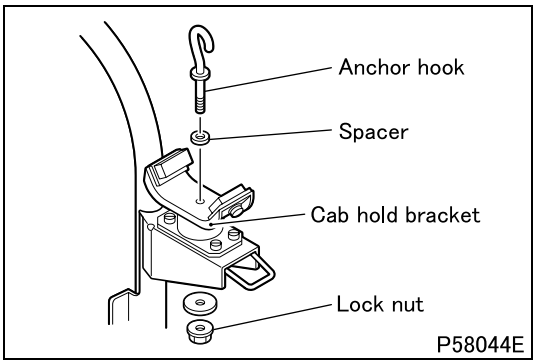

1.1 Inspection of lock handle operating physical force

[Inspection]

- If the lock handle is excessively light to operate, make adjustment as follows.
- If the lock handle is excessively heavy, apply grease to the sliding contact surfaces of handle and link, then operate the handle again for physical operating force. If the lock handle is still heavy, make adjustment as follows.

[Adjustment]

- Remove the lock nut, then remove the anchor hook.
- Adjust the operating physical force increasing or decreasing the number of spacers between anchor hook and cab hold bracket as follows.

	Number of spacers
If lock handle feels too heavy	Increase
If lock handle feels too light	Decrease

- After adjustment, tighten the lock nut to the specified torque.

CAUTION ⚠

- **If the lock handle feels too light, it is an indication that the handle could be easily unlocked by the vibration of the running vehicle.**

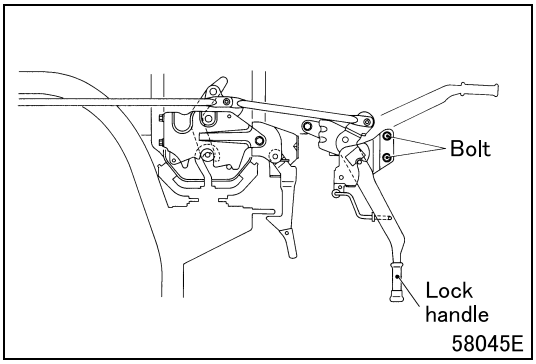

1.2 Adjustment of latch

- If the latch resists, loosen bolts and adjust the installed position of the lock handle using bolt slot.
- After adjustment, retighten the bolts.

M E M O

REMOVAL AND INSTALLATION OF CAB <EXCEPT CREW CAB>

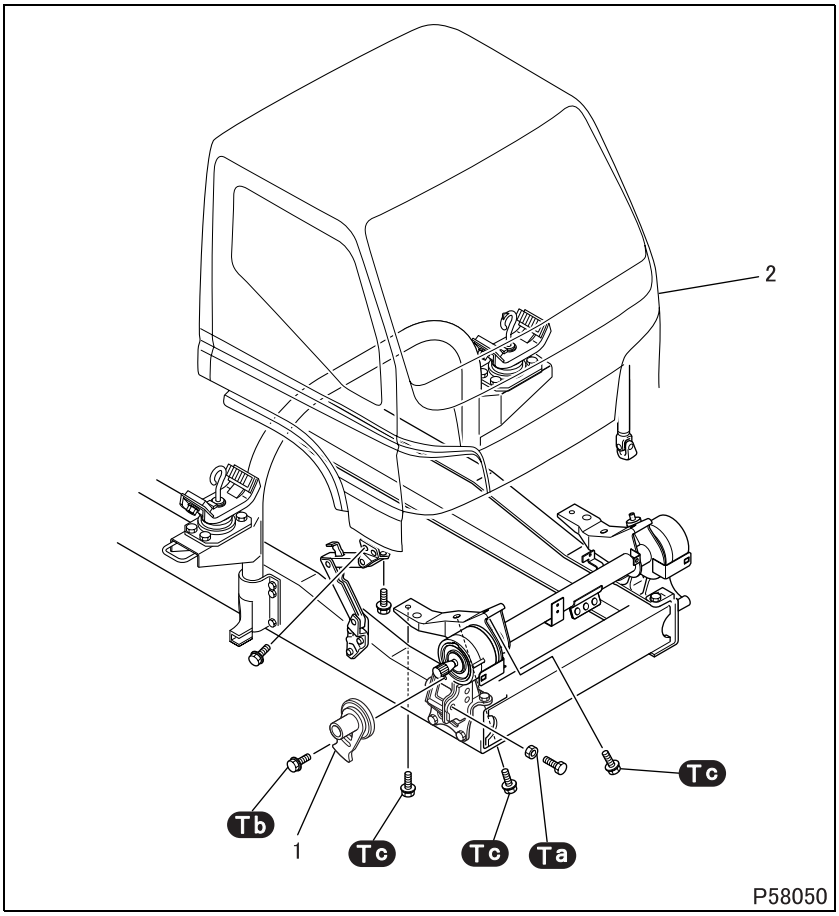

● **Removal sequence**

1 Anchor lever
2 Cab

WARNING ⚠

- **During removal and installation of the cab, the parking brake is not available for holding the vehicle at a standstill. Therefore, be sure to apply chocks to the tires to ensure that the vehicle does not move.**
- **Never remove the chocks until all the operations are completed.**

- Disconnect all cables, hoses and wires before removal and installation of the cab.

● **Installation sequence**

Follow the removal sequence in reverse.

Tightening torque (Unit: N·m {ft.lbs, kgf·m})

Mark	Parts to be tightened	Tightening torque	Remarks
Ta	Lock nut (anchor lever adjusting bolt locking)	59 to 83 {43 to 61, 6 to 8.5}	–
Tb	Bolt (anchor lever attaching)	34 to 54 {25 to 40, 3.5 to 5.5}	–
Tc	Bolt (cab mounting)	100 to 120 {74 to 89, 10 to 12}	–

◆**Removal procedure**◆

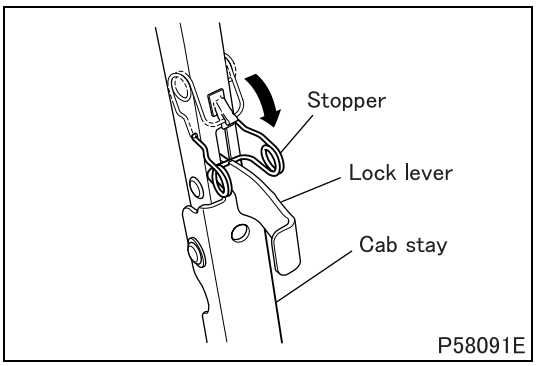

■ **Removal: Cab**

- Tilt the cab to securely lock the cab stay.

WARNING ⚠

- **Be sure to fit the stopper onto the lock lever to lock the cab stay.**

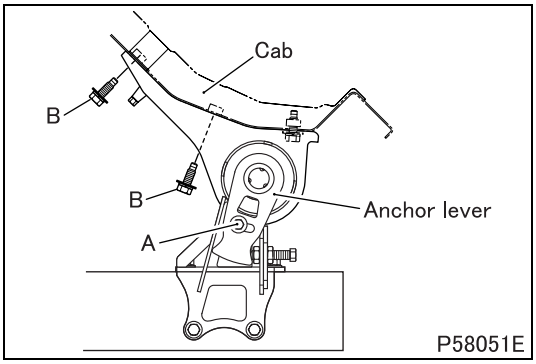

- Remove the bolt A, then detach the anchor lever.
- Remove the bolts B holding the cab in place.

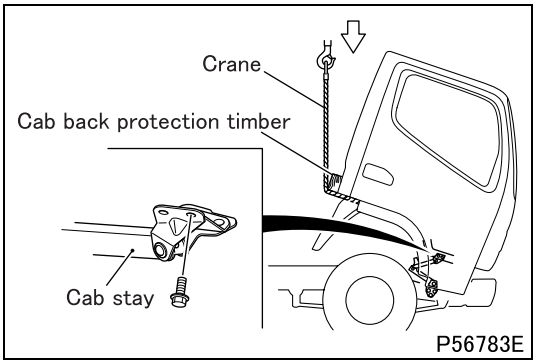

- Supporting the tilted cab with the crane, remove the cab stay.

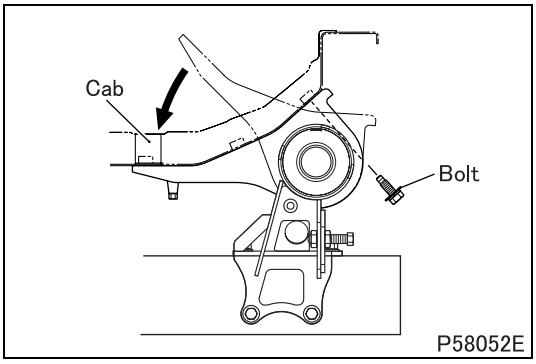

- Lower the cab all the way, then remove bolt.

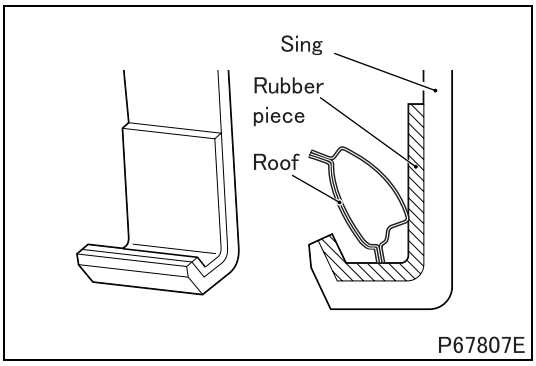

- Make available slings rigid enough to carry the weight of the cab.
- The hook portion of the sling must be lined with a rubber piece as shown to prevent deformation of the roof of the cab.

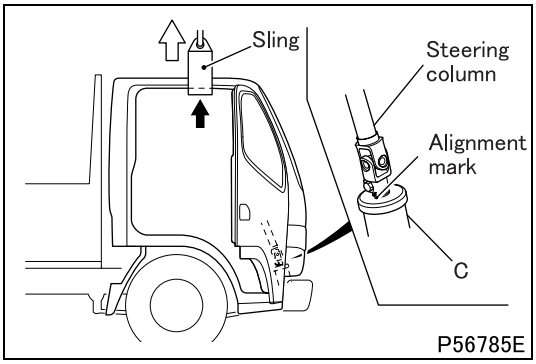

- Hook the slings on the cab roof as shown, then hoist the cab a little to see if it maintains level (balanced at the center of gravity).
- Provide alignment marks on the power steering gear C and steering column, then separate the steering column.
- To prevent the steering column from falling off, tie it securely to the cab using a rigid cord.
- Slowly and slightly hoist the cab straightly up to check that all cables, hoses and electric wiring have been disconnected before removing the cab.
- Lift off the cab straight.

WARNING ⚠

- **While the cab is up in the air, be sure to stay out from under it.**

◆Installation procedure◆

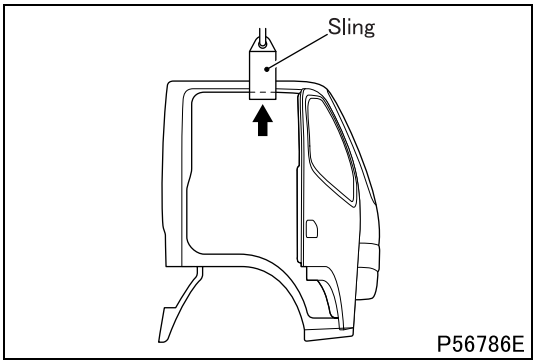

■ Installation: Cab

- Hook the slings at center-of-gravity points on both sides of the cab roof, and lift the cab.

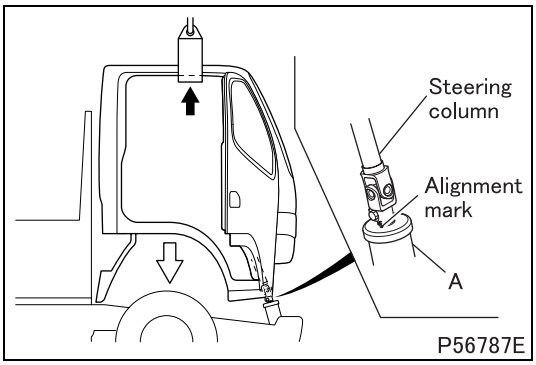

- Slowly lower the cab halfway.
- Join the power steering gear A and steering column together in accordance with the alignment marks.

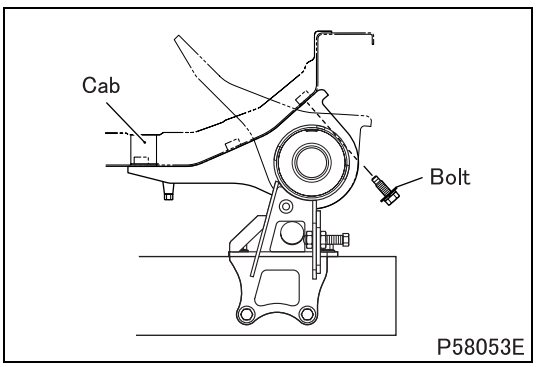

- Further lower the cab slowly to mount in position, then unhook the slings.
- Tighten mounting bolts to specified torque.

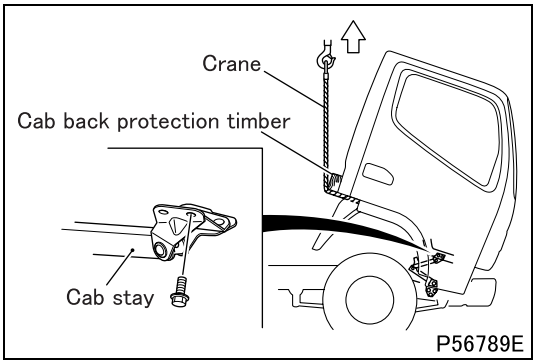

- Before tilting, support the cab using the crane.
- Tilt the cab with the crane, and install the cab stay.

WARNING ⚠

- **Be careful not to tilt the cab more than necessary. Doing so is extremely dangerous because it causes the cab to fall down forward.**

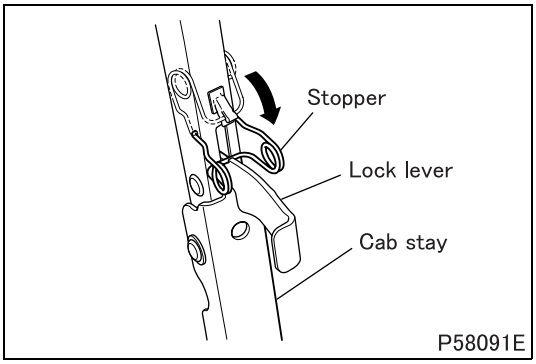

- After the cab stay is installed, tilt the cab to securely lock the cab stay. Then, remove the crane from the cab.

WARNING ⚠

- **Be sure to fit the stopper onto the lock lever to lock the cab stay.**

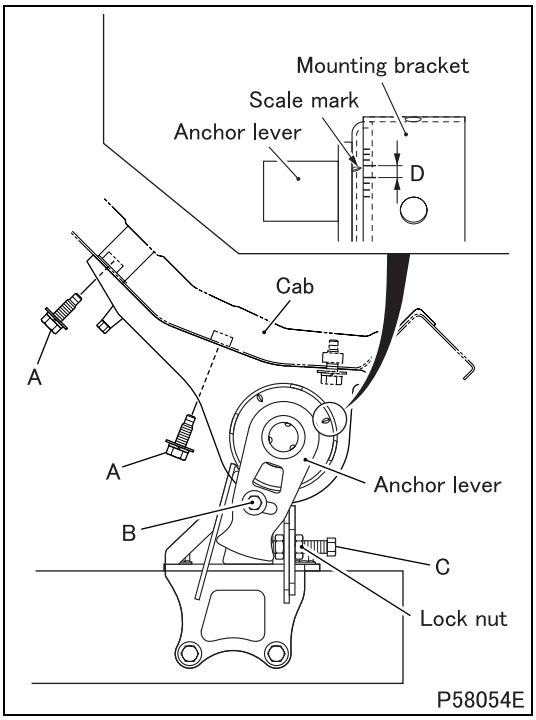

- Tighten the bolt A to specified torque.
- Align the graduated line of the anchor lever to the illustrated range of D (long division) of the scale graduated on the mounting bracket, then install the bolt B handtight.
- After contacting the bolt C with the anchor lever, tighten the bolt C by 10 mm {0.39 in.} (six and two third turns).
- Tighten the lock nut to specified torque.
- Tighten the handtight bolt B to specified torque.

REMOVAL AND INSTALLATION OF CAB <CREW CAB>

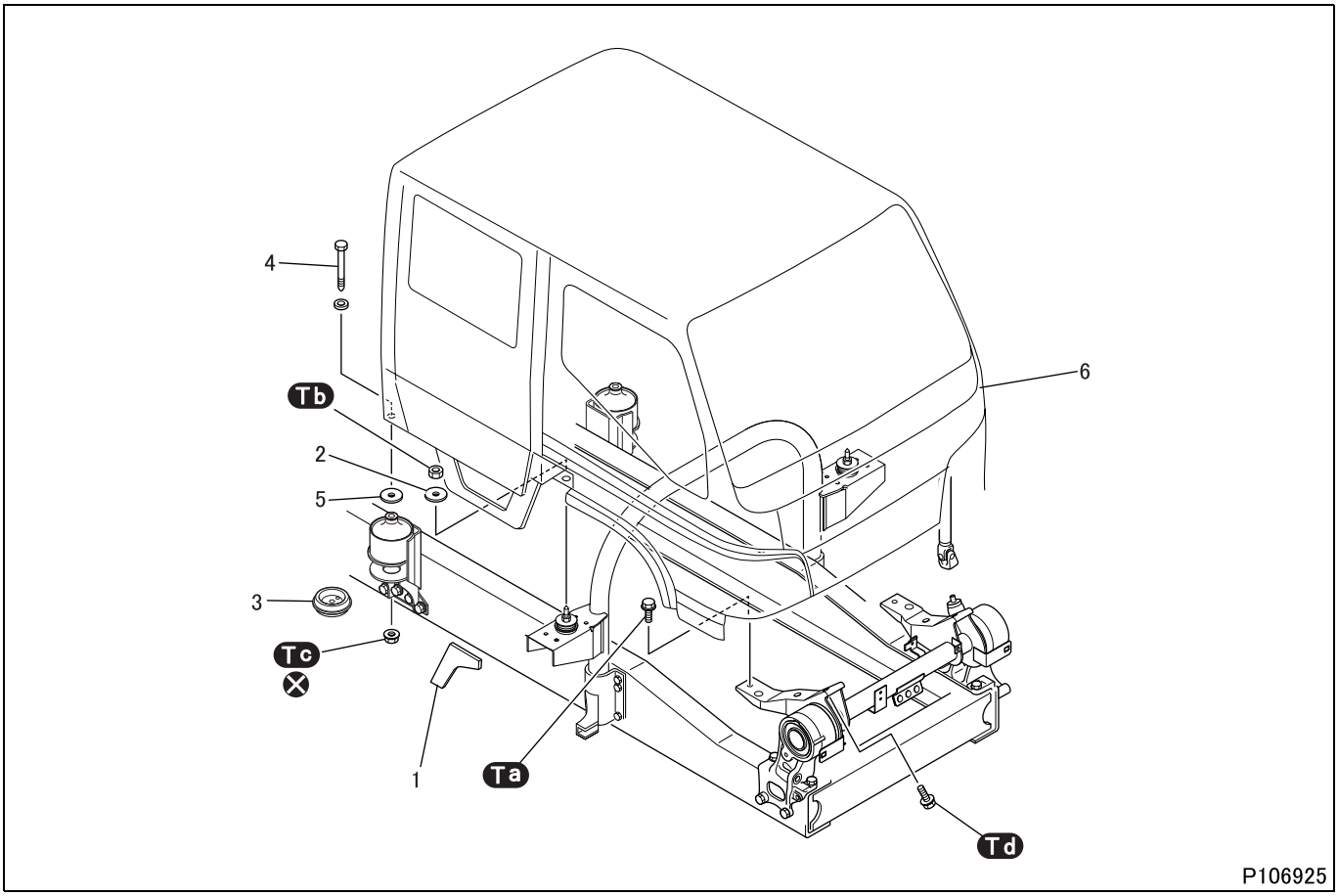

● **Disassembly sequence**

1 Garnish
2 Plate
3 Rear mounting stopper
4 Cone point bolt
5 Plate
6 Cab

⊗: Non-reusable parts

CAUTION ⚠

- **During removal and installation of the cab, the parking brake is not available to hold the vehicle at a standstill. Be sure to apply chocks to the tires to ensure that the vehicle does not move.**
- **Never remove the chocks until all the operations are completed.**
- **Before removal and installation, disconnect all cables, hoses and wires.**

● **Assembly sequence**

Follow the disassembly sequence in reverse.

Tightening torque (Unit: N·m {ft.lbs, kgf·m})

Mark	Parts to be tightened	Tightening torque	Remarks
Ta	Bolt (cab mounting)	70 to 95 {51 to 70, 7.1 to 9.7}	–
Tb	Nut (cab mounting)	39 to 59 {30 to 43, 4 to 6}	–
Tc	Lock nut (cab mounting)	59 to 69 {43 to 51, 6 to 7}	–
Td	Bolt (cab mounting)	100 to 120 {74 to 89, 10 to 12}	–

◆Removal procedure◆

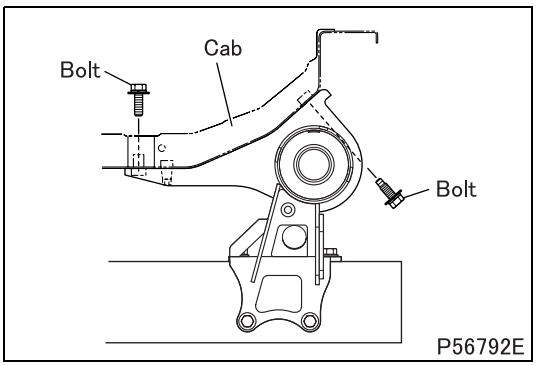

■ **Removal: Cab**

- Remove bolts from inside and outside the cab.

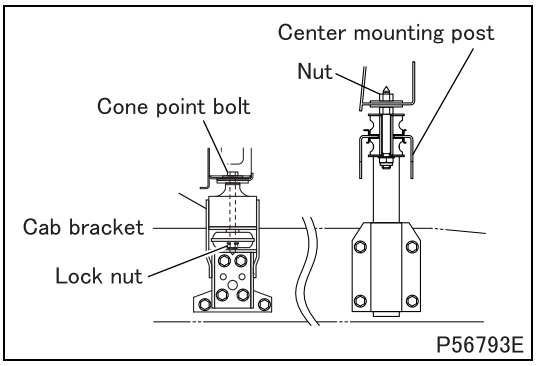

- Remove nuts from the center mounting post, then remove lock nut and cone point bolt from the cab bracket.

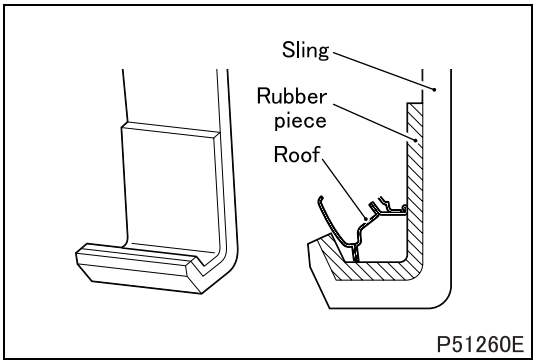

- Make available slings rigid enough to support the weight of the cab.
- Line the hook portion of each sling with a rubber piece to prevent deformation of the roof of the cab.

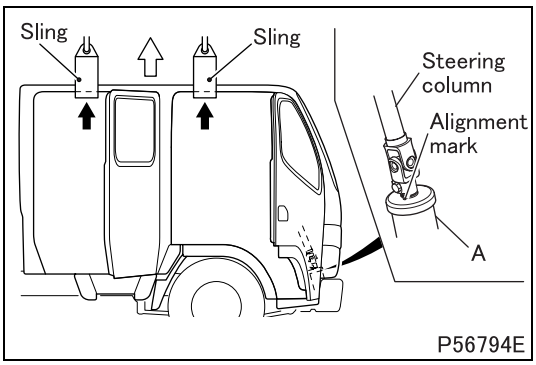

- Hook the slings at appropriate points on the roof of the cab, and lift the cab a little to see if it maintains level (balanced at the center of gravity).
- Provide alignment marks on the power steering gear A, then separate the steering column.
- Tie the steering column securely to the cab with a rigid cord not to fall off.
- Slowly and slightly hoist the cab straightly up to check that all cables, hoses and electric wiring have been disconnected before removing the cab.
- Slowly lift off the cab.

WARNING ⚠

- **When the cab is up in the air, be sure to stay out from under it.**

◆Installation procedure◆

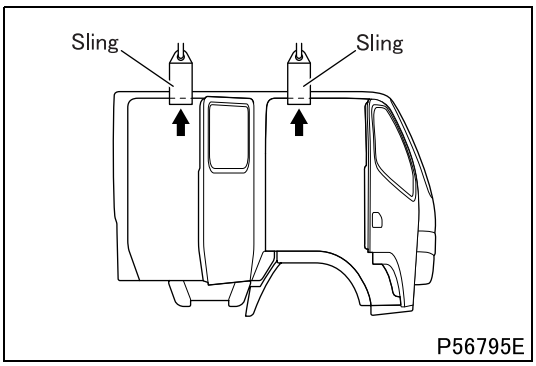

■ **Installation: Cab**

- Hook the slings at equilibrium center-of-gravity points on the roof of the cab.

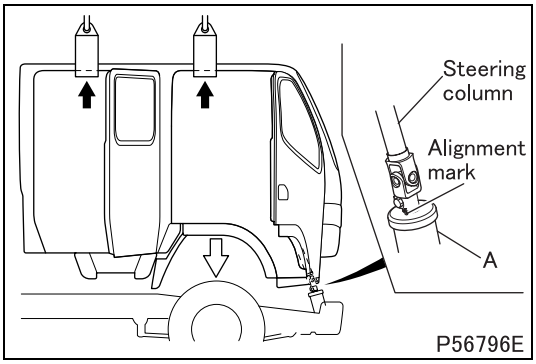

- Slowly lower the cab.
- Join the power steering gear A and steering column together in accordance with the alignment marks on them.

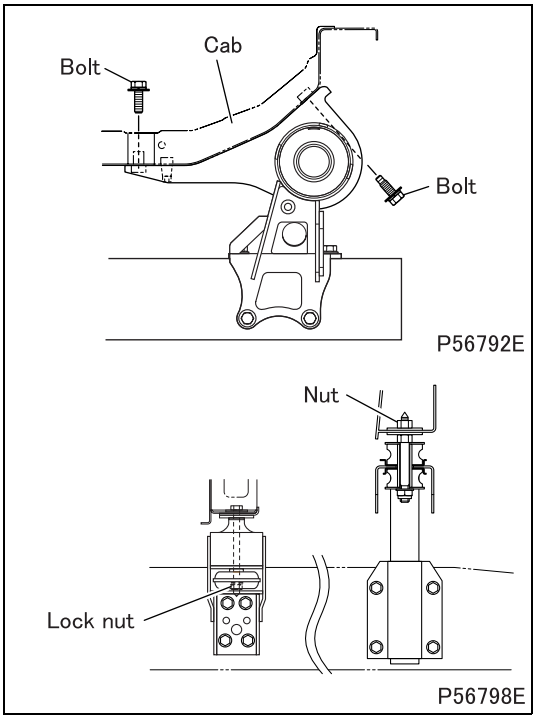

- Further lower the cab slowly into place. Then unhook the slings and tighten bolts, nuts and lock nuts to specified torques.

M E M O

FRONT CAB MOUNTING <EXCEPT CREW CAB>

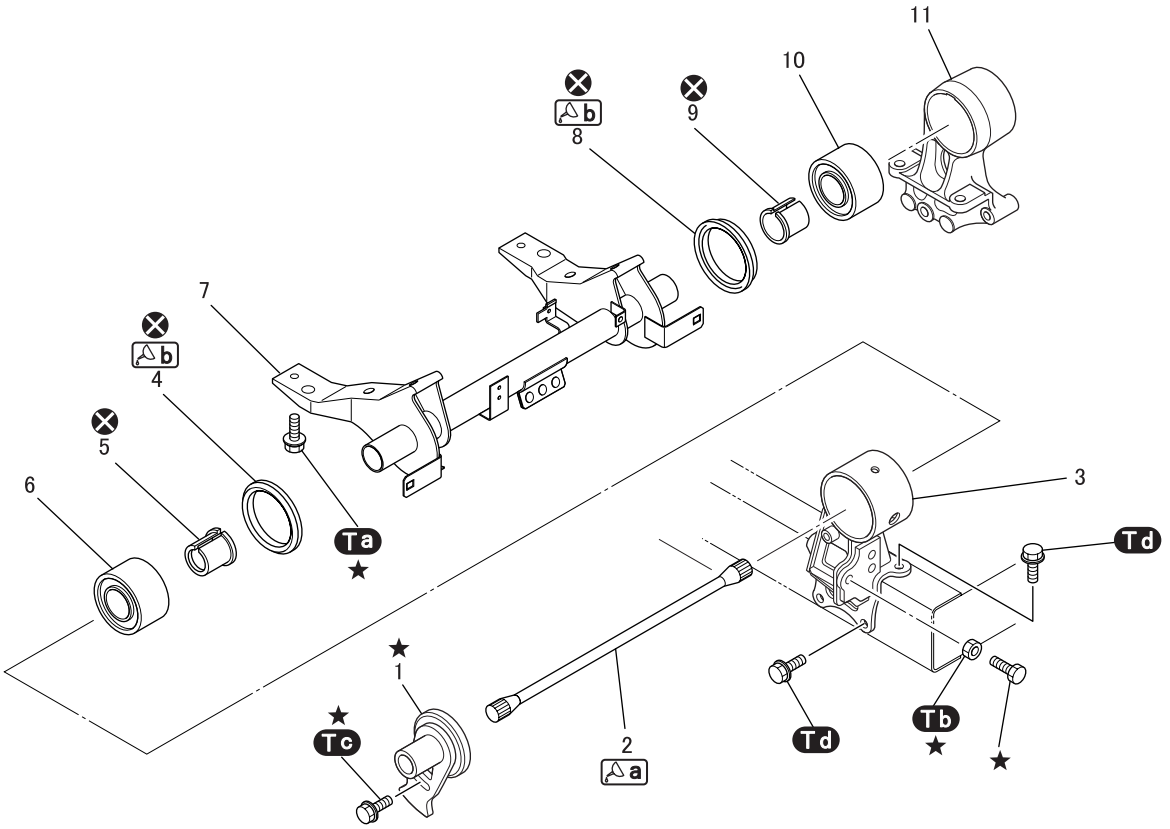

Parts marked with ★ are to be installed while the cab assembly is mounted.
Assemble them by reference to the removal and installation procedures for cab assembly. P103727E

● **Disassembly sequence**

1 Anchor lever
2 Torsion bar
3 Front mounting bracket, right-hand
4 Side cushion
5 Bushing
6 Front rubber cushion
7 Front floor cross member
8 Side cushion
9 Bushing
10 Front rubber cushion
11 Front mounting bracket, left-hand

⊗: Non-reusable parts

● **Assembly sequence**

Follow the disassembly sequence in reverse.

Tightening torque (Unit: N·m {ft.lbs, kgf·m})

Mark	Parts to be tightened	Tightening torque	Remarks
Ta	Bolt (cab mounting)	100 to 120 {74 to 89, 10 to 12}	–
Tb	Nut (anchor lever adjusting bolt locking)	59 to 83 {43 to 61, 6 to 8.5}	–
Tc	Bolt (anchor lever attaching)	34 to 54 {25 to 40, 3.5 to 5.5}	–
Td	Bolt (front mounting bracket attaching)	200 to 270 {145 to 200, 20 to 28}	–

Lubricant and/or sealant

Mark	Points of application	Specified lubricant and/or sealant	Quantity
a	Both serrated end portions of torsion bar	Wheel bearing grease [NLGI No. 2 (Li soap)]	As required
b	Front floor cross member contact surface of side cushion	Rubber Grease	As required

◆Installation procedure◆

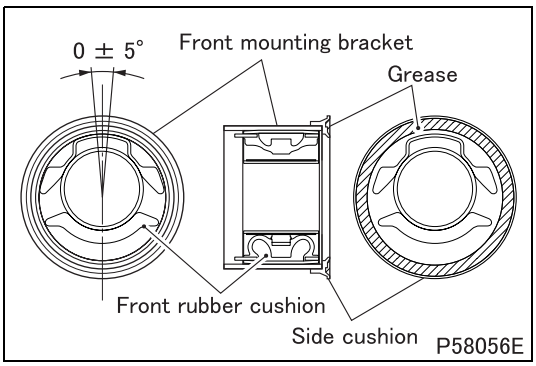

■ Installation: Side rubber cushion and front rubber cushion

- Fit the front rubber cushion to the front mounting bracket at an angle within the illustrated range.
- After installing the front rubber cushion, fit the side rubber cushion to it and fill grease in the side rubber cushion as shown.

FRONT CAB MOUNTING <CREW CAB>

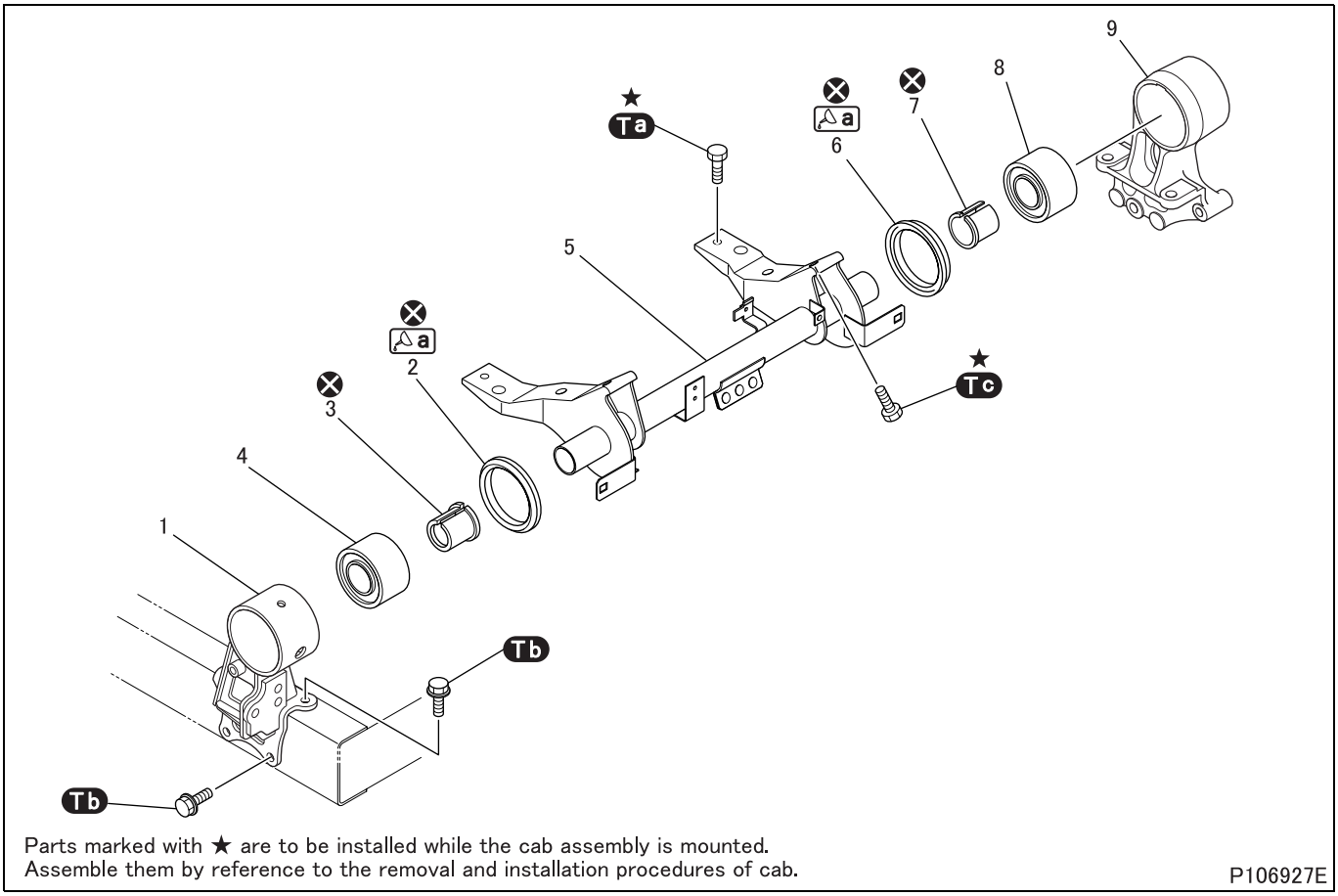

Parts marked with ★ are to be installed while the cab assembly is mounted.
Assemble them by reference to the removal and installation procedures of cab.

P106927E

● **Disassembly sequence**

1 Front mounting bracket, right-hand
2 Side cushion
3 Bushing
4 Front rubber cushion
5 Front floor cross member
6 Side cushion
7 Bushing
8 Front rubber cushion
9 Front mounting bracket, left-hand

⊗: Non-reusable parts

● **Assembly sequence**

Follow the disassembly sequence in reverse.

Tightening torque (Unit: N·m {ft.lbs, kgf·m})

Mark	Parts to be tightened	Tightening torque	Remarks
Ta	Bolt (cab mounting)	70 to 95 {50 to 70, 7.1 to 9.7}	–
Tb	Bolt (front mounting bracket attaching)	200 to 270 {145 to 200, 20 to 28}	–
Tc	Bolt (cab mounting)	100 to 120 {74 to 89, 10 to 12}	–

Lubricant and/or sealant

Mark	Points of application	Specified lubricant and/or sealant	Quantity
a	Front floor cross member contact surface of side cushion	Rubber Grease	As required

◆Installation procedure◆

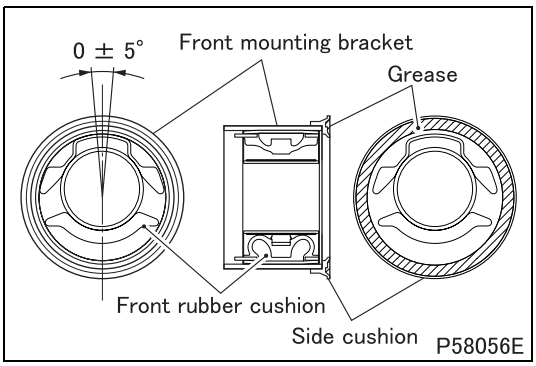

■ Installation: Side rubber cushion and front rubber cushion

- Fit the front rubber cushion to the front mounting bracket at an angle within the illustrated range.
- After installing the front rubber cushion, fit the side rubber cushion to it and fill grease in the side rubber cushion as shown.

REAR CAB MOUNTING <EXCEPT CREW CAB>

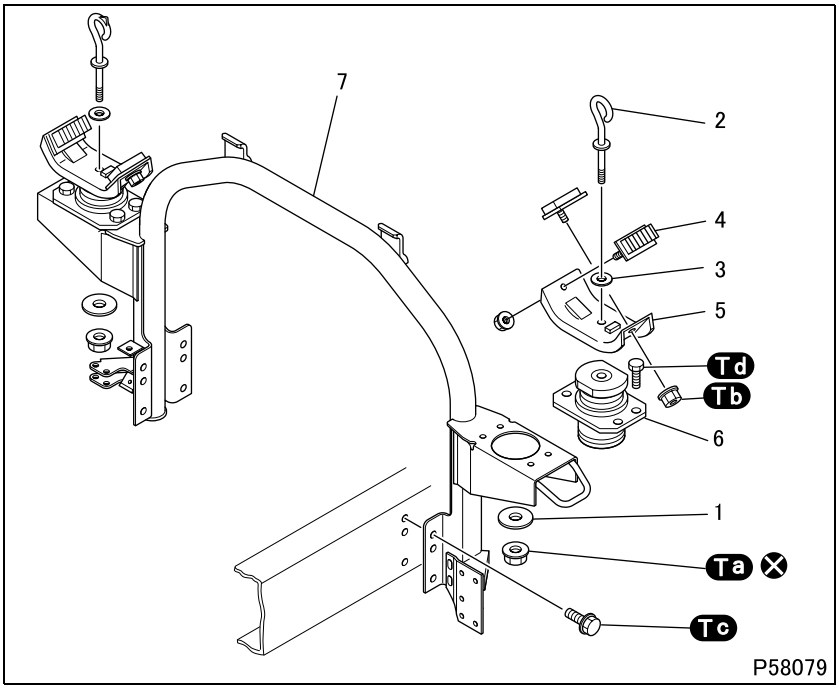

● **Disassembly sequence**

1 Plate
2 Anchor hook
3 Spacer
4 Side rubber cushion
5 Cab hold bracket
6 Rear lower rubber cushion
7 Rear mounting post

⊗: Non-reusable parts

● **Assembly sequence**

Follow the disassembly sequence in reverse.

Tightening torque (Unit: N·m {ft.lbs, kgf·m})

Mark	Parts to be tightened		Tightening torque	Remarks
Ta	Lock nut (anchor hook attaching)		83 to 98 {61 to 72, 8.5 to 10}	–
Tb	Nut (side rubber cushion attaching)		10 to 15 {7.4 to 11, 1.0 to 1.5}	–
Tc	Bolt (rear mounting post attaching)		78 to 108 {5.8 to 80, 8 to 11}	–
Td	Bolt (rear rubber cushion attaching)	FE	16 to 20 {12 to 14, 1.6 to 2}	–
		FG	34 to 50 {25 to 37, 3.5 to 5.1}	

◆**Installation procedure**◆

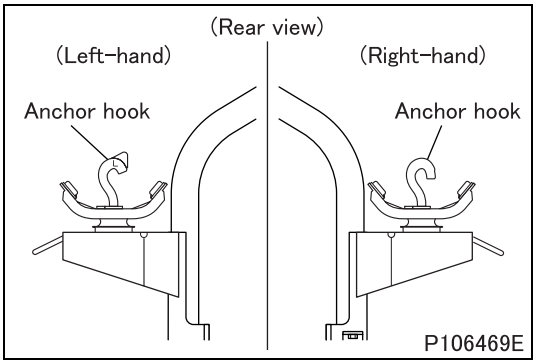

■ **Installation: Anchor hook**

- Fit the anchor hooks to the bracket as shown in the illustration.

CAUTION ⚠

- **When the cab is tilted down with installing the anchor hooks in wrong direction, the links installed in the cab can not hook to the anchor hooks and it may damage both of the anchor hooks and the links.**

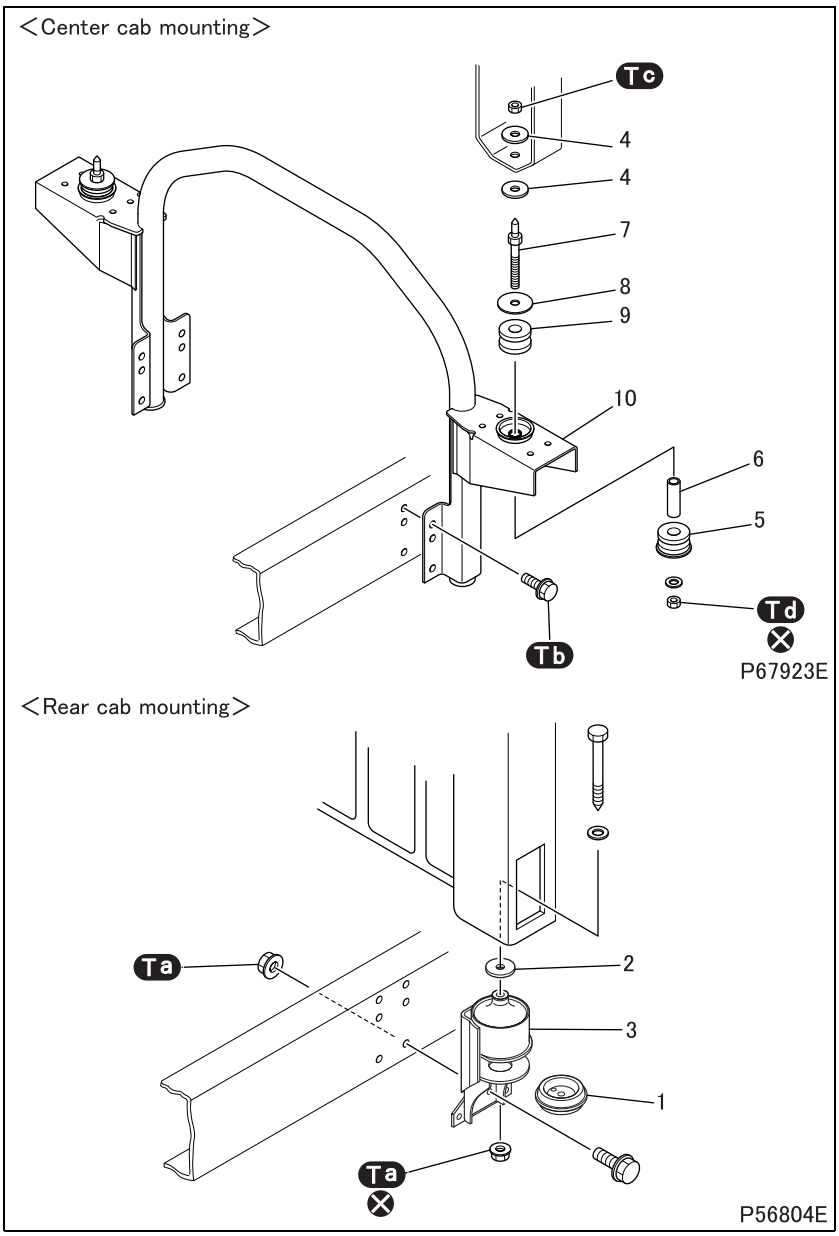

● **Disassembly sequence**

1 Rear mounting stopper
2 Plate
3 Cab bracket
4 Plate
5 Rear mounting lower rubber cushion
6 Pipe
7 Cone point bolt
8 Plate
9 Rear mounting upper rubber cushion
10 Rear mounting post

⊗: Non-reusable parts

● **Assembly sequence**

Follow the disassembly sequence in reverse.

Tightening torque (Unit: N·m {ft.lbs, kgf·m})

Mark	Parts to be tightened	Tightening torque	Remarks
Ta	Lock nut (cab mounting)	59 to 69 {43 to 51, 6 to 7}	–
	Nut (cab bracket attaching)		–
Tb	Bolt (rear mounting post attaching)	78 to 108 {58 to 80, 8 to 11}	–
Tc	Nut (cone point bolt installing)	39 to 59 {29 to 43, 4 to 6}	–
Td	Lock nut (cab mounting)	83 to 98 {61 to 72, 8.5 to 10}	–

CAB TILT LINK <EXCEPT CREW CAB>

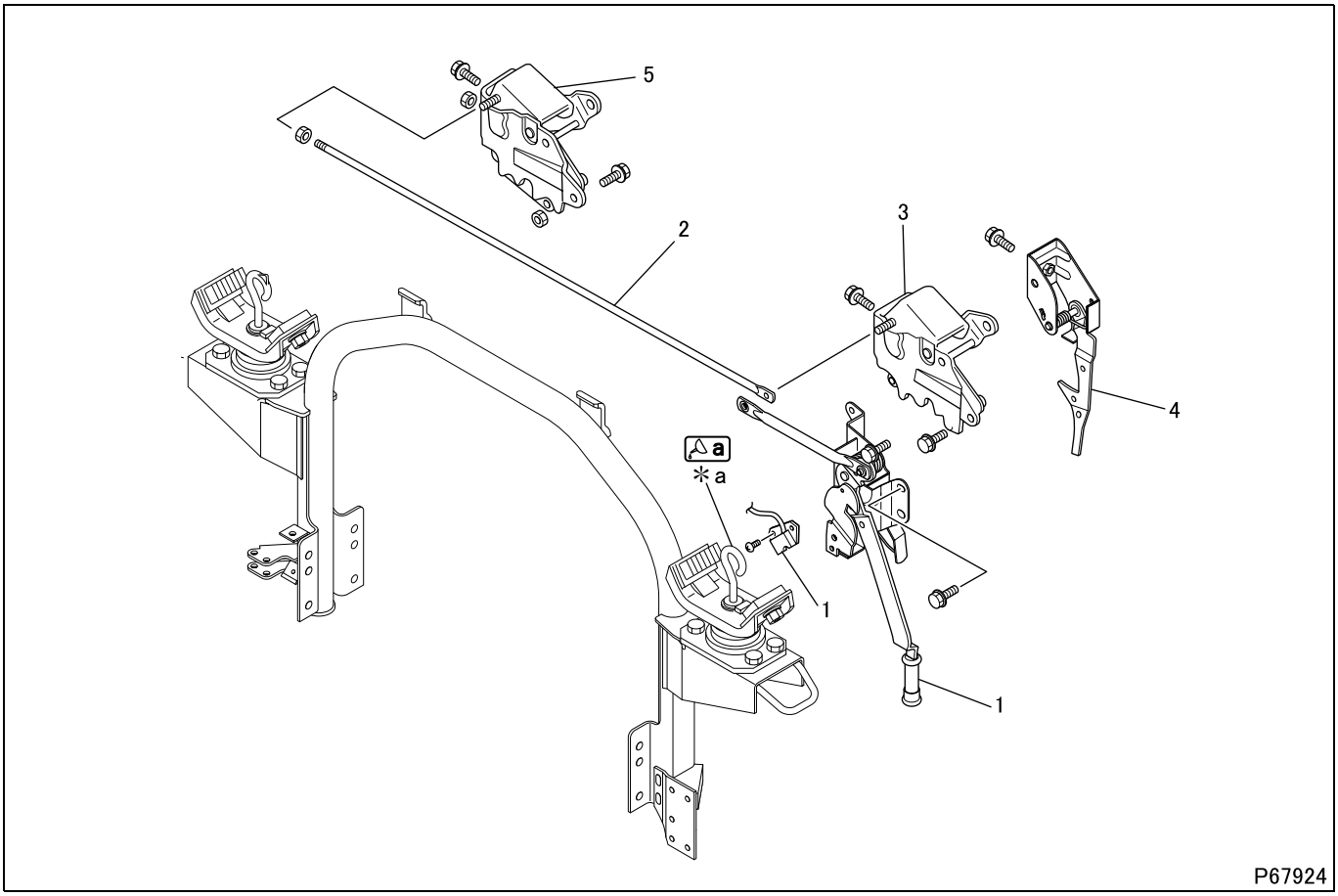

● **Disassembly sequence**

1 Lock handle
2 Center rod
3 Link (right-hand)
4 Safety hook
5 Link (left-hand)

***a**: Anchor hook

● **Assembly sequence**

Follow the disassembly sequence in reverse.

- After assembly, adjust the lock handle operating physical force. (See ON-VEHICLE INSPECTION AND ADJUSTMENT.)

Lubricant and/or sealant

Mark	Points of application	Specified lubricant and/or sealant	Quantity
a	Contact of link of anchor hook	Chassis grease [NLGI No. 1 (Li soap)]	As required

◆Installation procedure◆

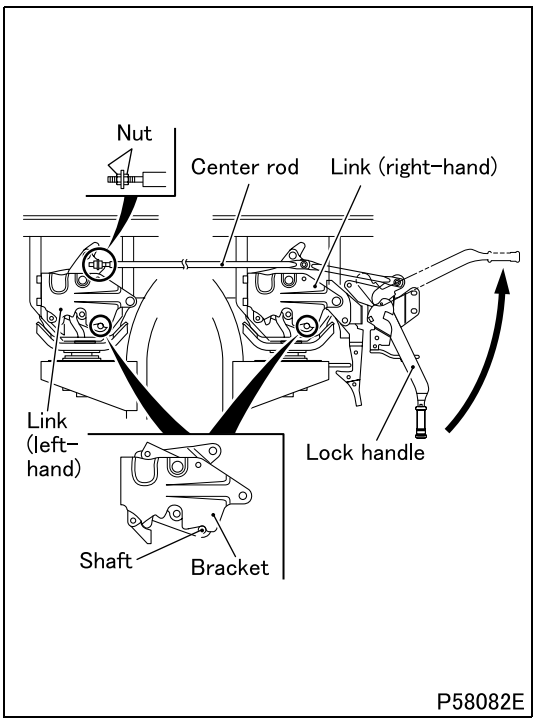

■ Installation: Center rod

- Operate the lock handle in the illustrated direction to unlock the left-hand and right-hand links.
- Adjust the center rod nut to bring the shafts of left-hand and right-hand links into contact with brackets.

CAB STAY <EXCEPT CREW CAB>

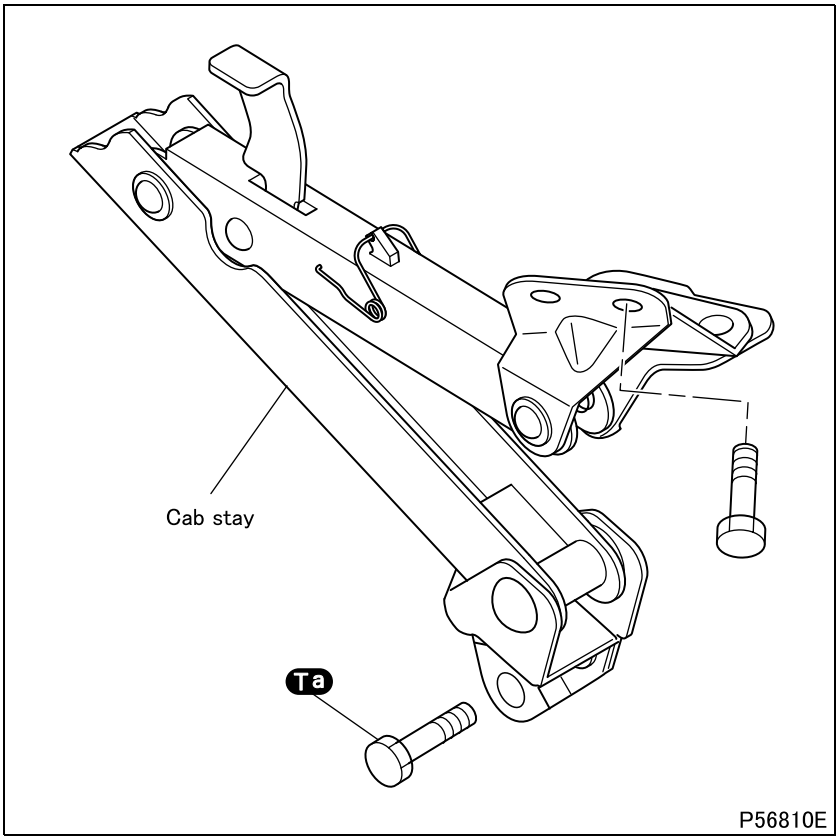

WARNING ⚠

- **Before removing the cab stay, be sure to support the cab with a crane or the like so that it does not fall during work.**

Tightening torque (Unit: N·m {ft.lbs, kgf·m})

Mark	Parts to be tightened	Tightening torque	Remarks
Ta	Bolt (cab stay mounting)	59 to 78 {43 to 58, 6 to 8}	–

Group 43

Door

Table of Contents

Back

Home

MITSUBISHI FUSO TRUCK OF AMERICA, Inc.

Pub.No.TWSE0713-43

INDEX

SPECIFICATIONS 43-2

STRUCTURE AND OPERATION
1. Front Door Lock System 43-3
2. Rear Door Lock System <Crew Cab> 43-3
3. Front Door Glass Opening and Closing Mechanism 43-4
4. Rear Door Glass Opening and Closing Mechanism <Crew Cab> 43-6

TROUBLESHOOTING 43-8

ON-VEHICLE INSPECTION AND ADJUSTMENT
1. Adjustment of Front Door Alignment 43-10
2. Adjustment of Rear Door Alignment <Crew Cab> 43-13

FRONT DOOR 43-16

REAR DOOR <CREW CAB> 43-24

SPECIFICATIONS

Item		Specifications	
		Except crew cab	Crew cab
Front door	Door lock system	Auto door lock system (centralized door lock)	Manual
	Door glass opening and closing mechanism	Electrical control type	Manual control type
Rear door	Door lock system	–	Manual
	Door glass opening and closing mechanism	–	Manual control type

1. Front Door Lock System

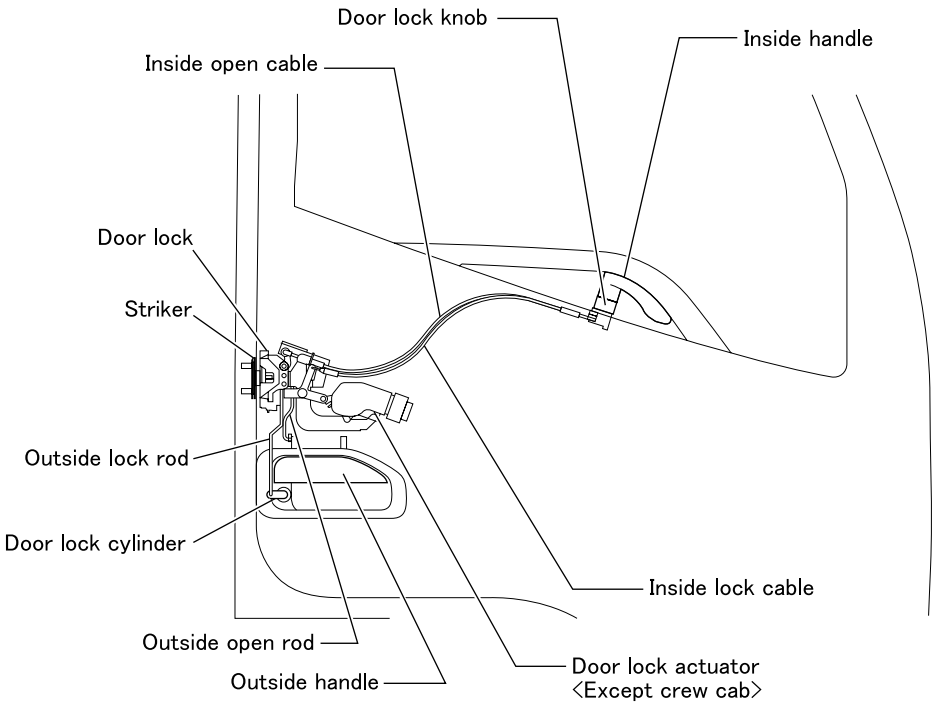

P58094E

2. Rear Door Lock System <Crew Cab>

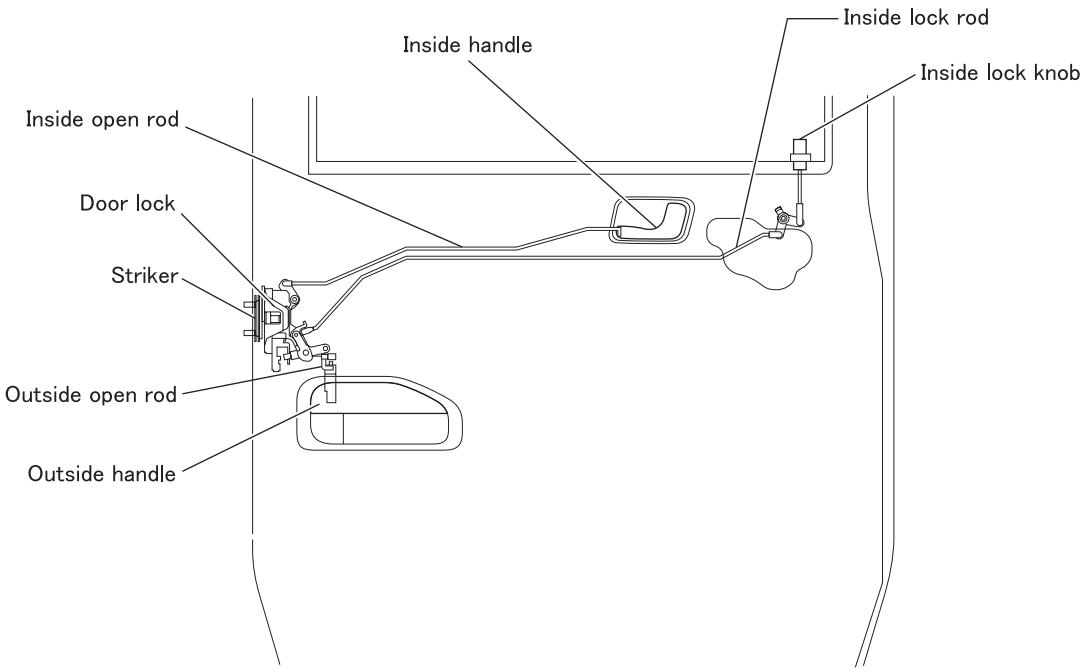

P67519E

3. Front Door Glass Opening and Closing Mechanism

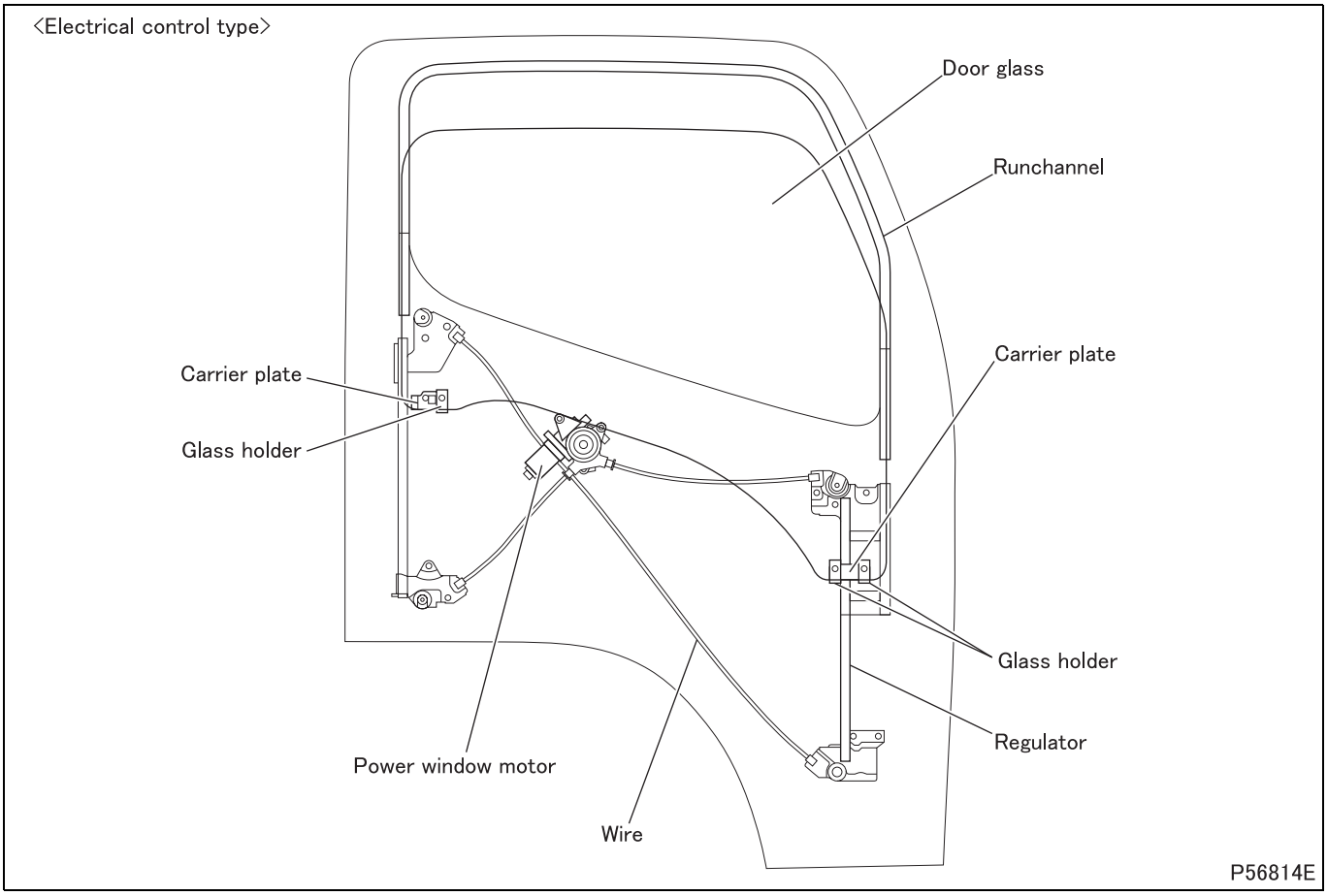

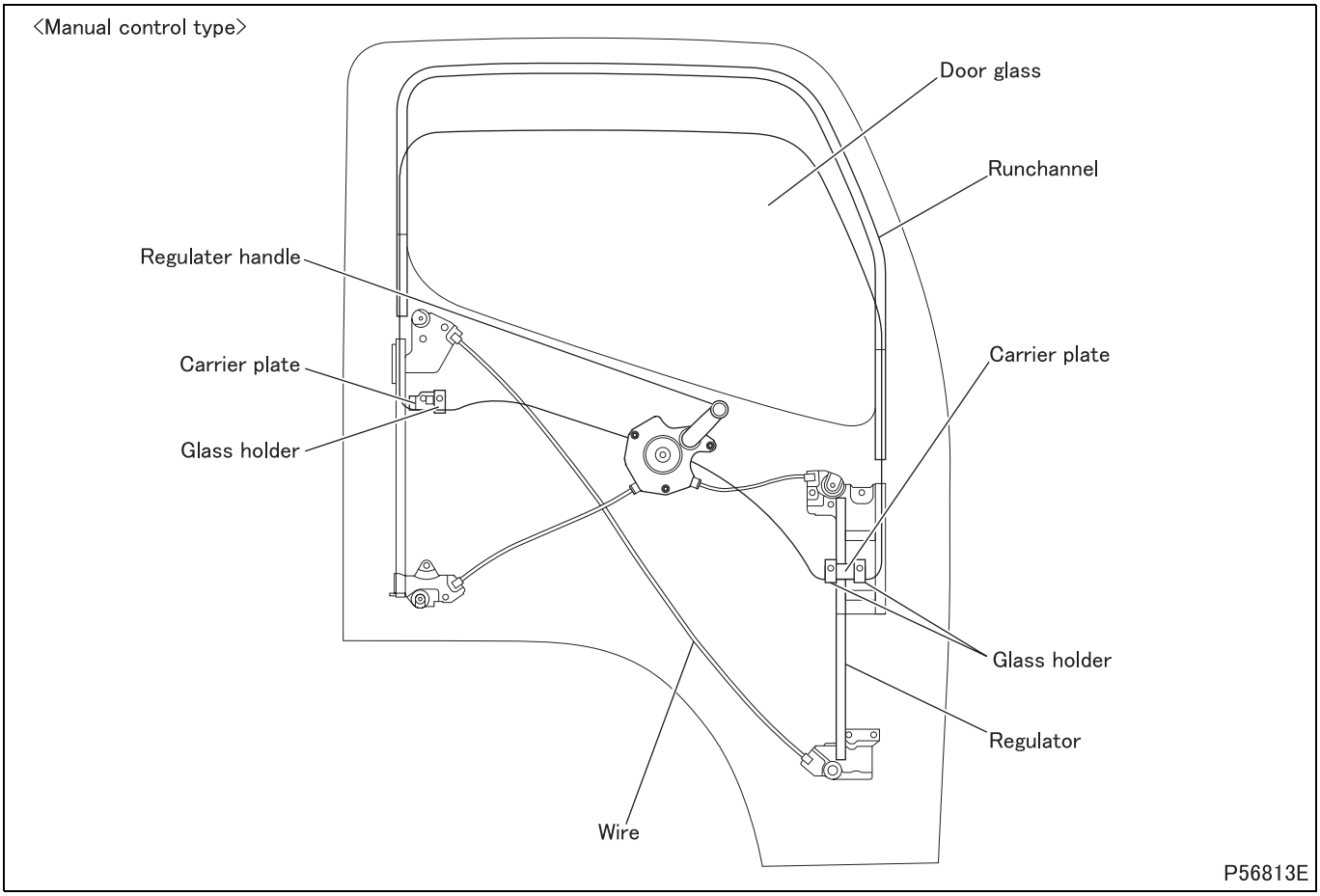

- The door glass is secured to the carrier plate by the medium of glass holder.
- With the rotation of the power window motor <Electrical control type> or regulator handle <Manual control type>, the carrier plate is moved up and down by means of the wire to open and close the door glass.

4. Rear Door Glass Opening and Closing Mechanism <Crew Cab>

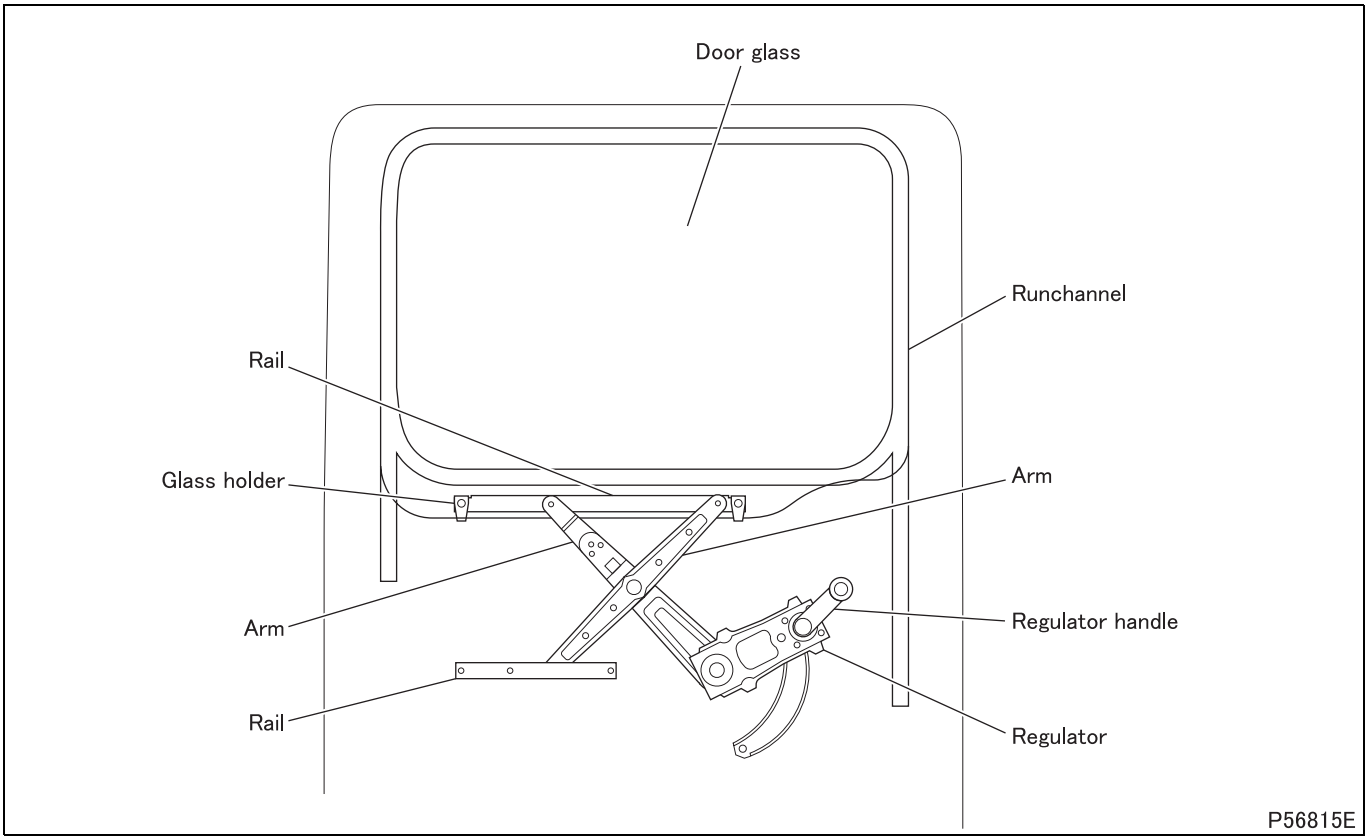

- The door glass is secured to the rail by the medium of glass holder.
- The rail is secured to the door panel, and the arms slide back and forth inside the rail.
- Turning the regulator handle moves the rail up and down by means of the regulator and arm to open and close the door glass.

M E M O

Door Glass Opening and Closing Mechanism <Electrical control type>

Symptoms / Possible causes	Door glass falls by gravity when vehicle is running	Regulator or motor emits noise when vehicle is running	Power window fails to operate	Power window fails to stop	Power window emits noise when in motion	Reference Gr
Power window switch faulty			O	O		Gr54
Regulator and motor assembly faulty	O		O	O	O	
Regulator and motor assembly improperly mounted					O	
Fuse or high current fuse blown			O			
Connector improperly connected, harness open-circuited or improperly grounded			O			
Door glass and door beltline molding unsteady		O				
Air temperature low						

<Manual control type>

Possible causes \ Symptoms		Regulator handle drags	Door glass unsteady when opening and closing	Regulator emits noise when door glass moves up and down	Regulator emits noise when vehicle is running	Door glass falls by gravity when vehicle is running	Reference Gr
Regulator	Regulator faulty	O				O	
	Roller resistive	O		O			
	Improperly mounted		O		O		
Runchannel damaged			O				
Runchannel improperly mounted			O				
Door glass improperly installed		O					
Door glass and door beltline molding unsteady					O		

1. Adjustment of Front Door Alignment

Tightening torque (Unit: N·m {ft.lbs, kgf·m})

Mark	Parts to be tightened	Tightening torque	Remarks
–	Bolt (door mounting; ★ marked)	17 to 26 {12 to 19, 1.7 to 2.6}	–
	Bolt (upper and lower hinge mounting; ☆ marked)		
–	Screw (striker mounting)	9 to 14 {6.5 to 10, 0.9 to 1.4}	–

- Door alignment is adjusted by changing the positions of the upper and lower hinges and striker.
  Door alignment dimensions: See **1.3**.

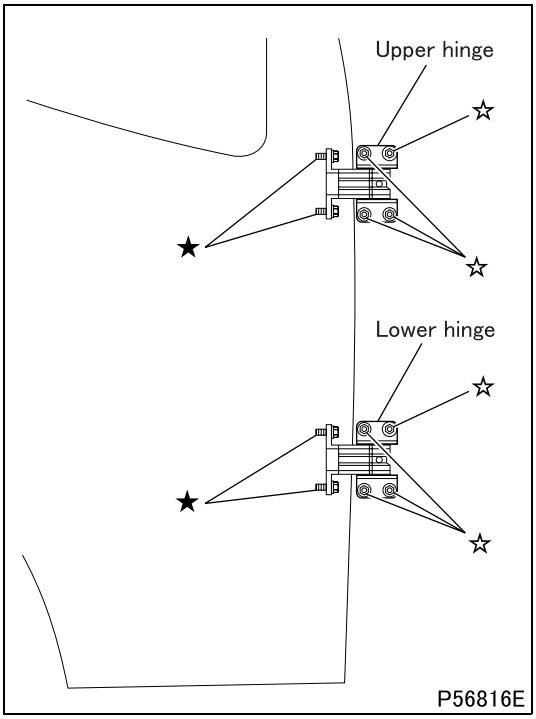

1.1 Adjustment of hinge positions

- Use ★ marked bolts to adjust gap.
- Use ☆ marked bolts to adjust flushness.

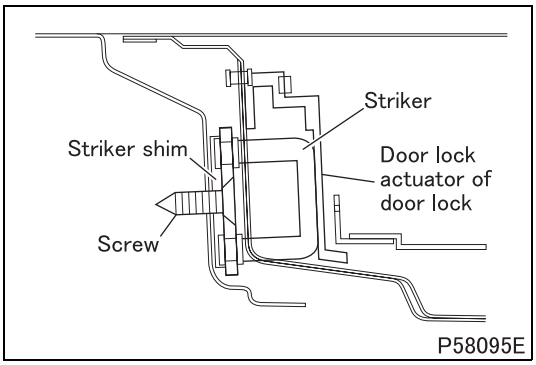

1.2 Adjustment of striker position

- Use mounting screw to make the adjustment.
- To adjust the engagement of the striker with the door lock actuator or door lock, change the number of striker shims as required.

1.3 Front door alignment dimensions

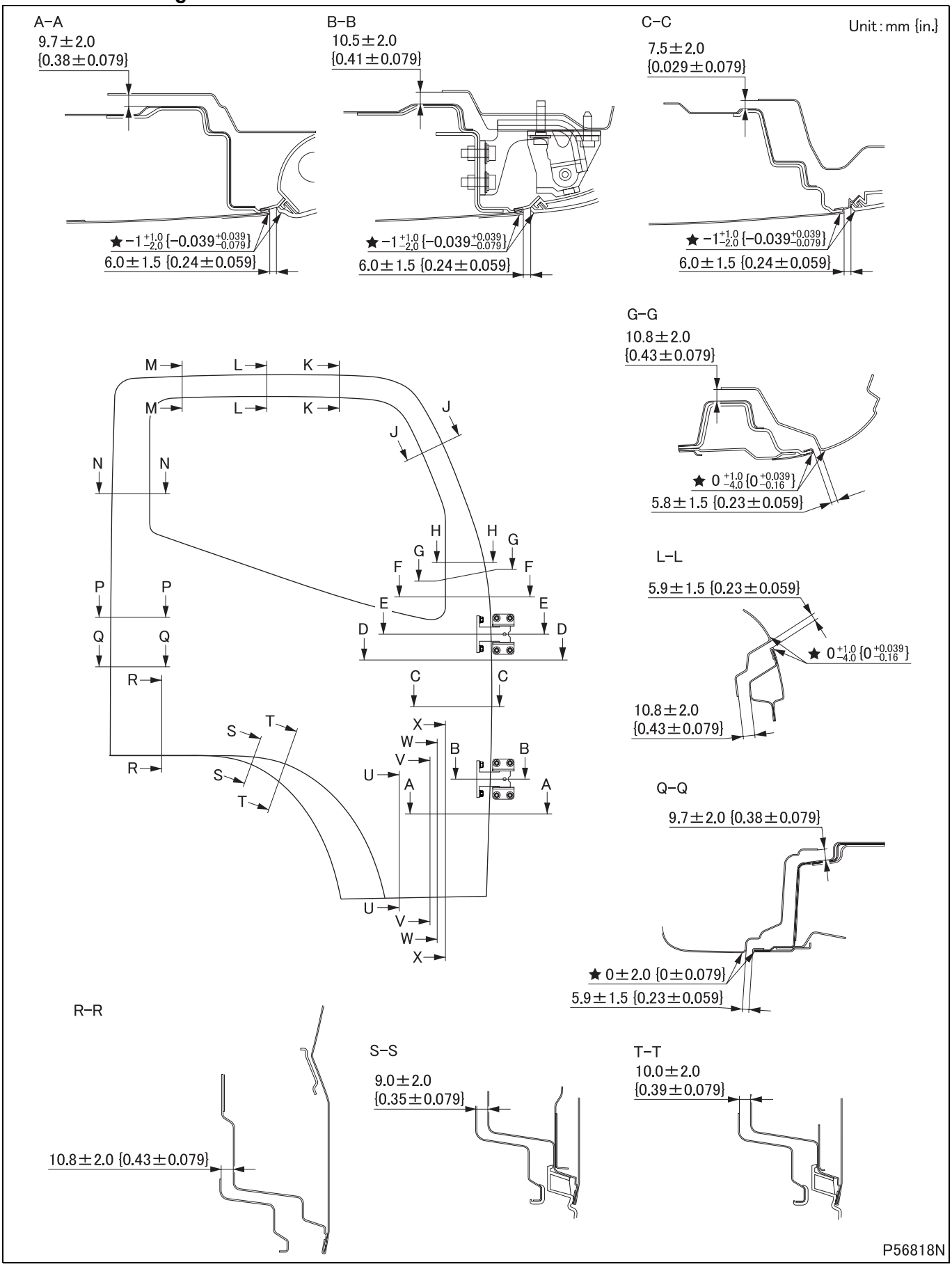

★: Flushness dimension (+ for outside of cab; – for inside of cab)

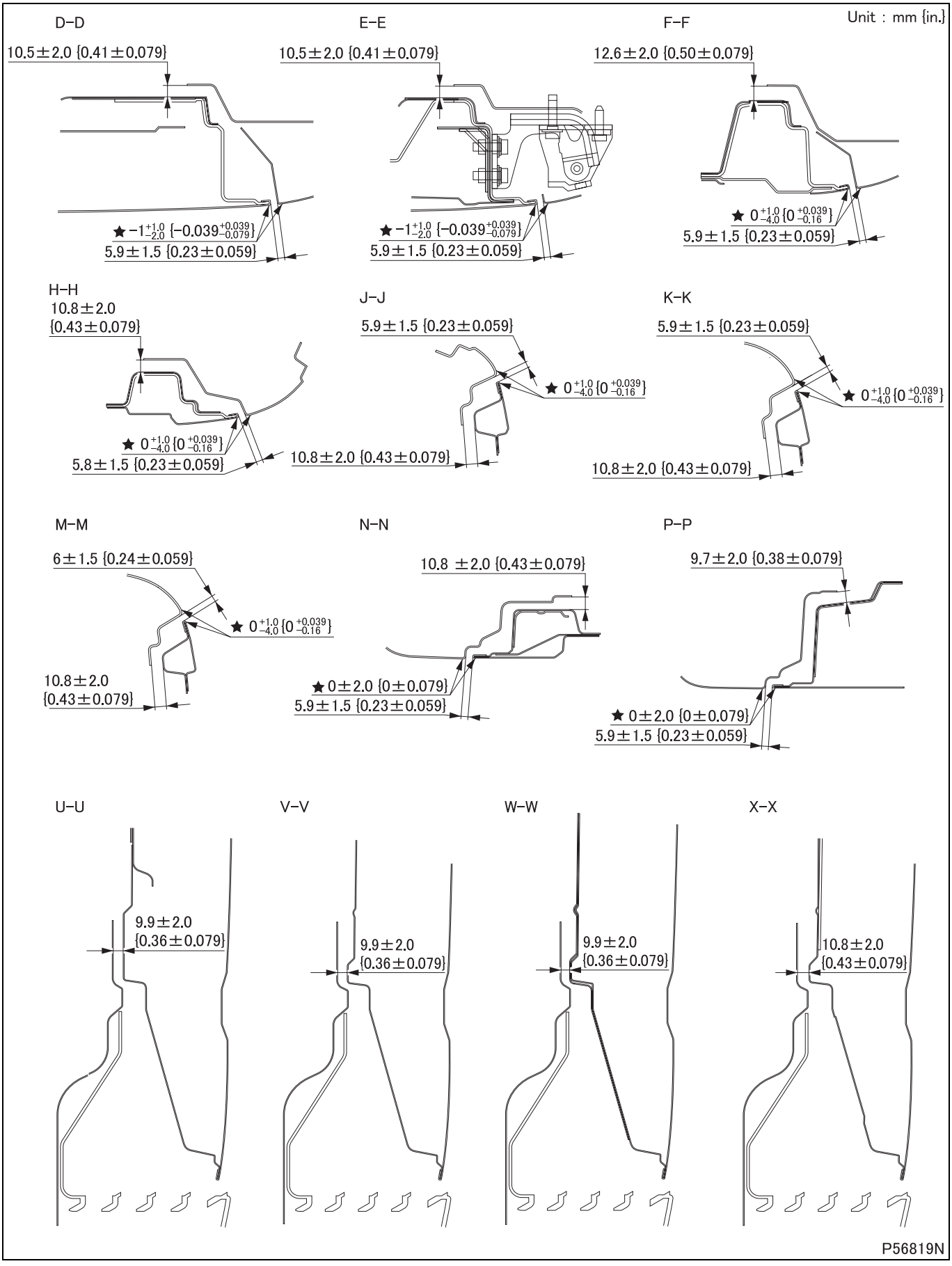
Unit : mm {in.}
D–D
10.5±2.0 {0.41±0.079}
★ −1 +1.0 −2.0 {−0.039 +0.039 −0.079}
5.9±1.5 {0.23±0.059}
E–E
10.5±2.0 {0.41±0.079}
★ −1 +1.0 −2.0 {−0.039 +0.039 −0.079}
5.9±1.5 {0.23±0.059}
F–F
12.6±2.0 {0.50±0.079}
★ 0 +1.0 −4.0 {0 +0.039 −0.16}
5.9±1.5 {0.23±0.059}
H–H
10.8±2.0
{0.43±0.079}
★ 0 +1.0 −4.0 {0 +0.039 −0.16}
5.8±1.5 {0.23±0.059}
J–J
5.9±1.5 {0.23±0.059}
★ 0 +1.0 −4.0 {0 +0.039 −0.16}
10.8±2.0 {0.43±0.079}
K–K
5.9±1.5 {0.23±0.059}
★ 0 +1.0 −4.0 {0 +0.039 −0.16}
10.8±2.0 {0.43±0.079}
M–M
6±1.5 {0.24±0.059}
★ 0 +1.0 −4.0 {0 +0.039 −0.16}
10.8±2.0
{0.43±0.079}
N–N
10.8 ±2.0 {0.43±0.079}
★ 0±2.0 {0±0.079}
5.9±1.5 {0.23±0.059}
P–P
9.7±2.0 {0.38±0.079}
★ 0±2.0 {0±0.079}
5.9±1.5 {0.23±0.059}
U–U
9.9±2.0
{0.36±0.079}
V–V
9.9±2.0
{0.36±0.079}
W–W
9.9±2.0
{0.36±0.079}
X–X
10.8±2.0
{0.43±0.079}
P56819N

2. Adjustment of Rear Door Alignment <Crew Cab>

Tightening torque (Unit: N·m {ft.lbs, kgf·m})

Mark	Parts to be tightened	Tightening torque	Remarks
–	Screw (striker mounting)	9 to 14 {6.5 to 10, 0.9 to 1.4}	–

- Door alignment is adjusted by changing the positions of the upper and lower hinges and striker.
  Rear door alignment dimensions: See **2.3**.

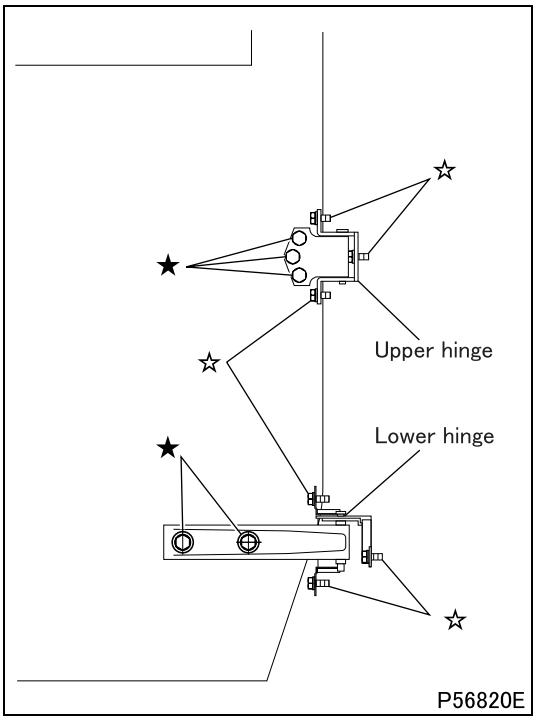

2.1 Adjustment of hinge positions

- Use ★ marked bolts to adjust gap.
- Use ☆ marked bolts to adjust flushness.

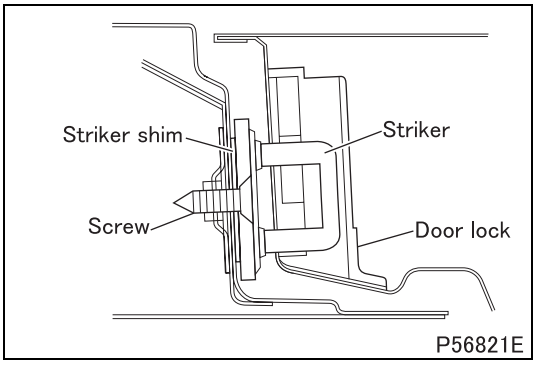

2.2 Adjustment of striker position

- Use mounting screw to make the adjustment.
- To adjust the engagement of the striker with the door lock, change the number of striker shims as required.

2.3 Rear door alignment dimensions

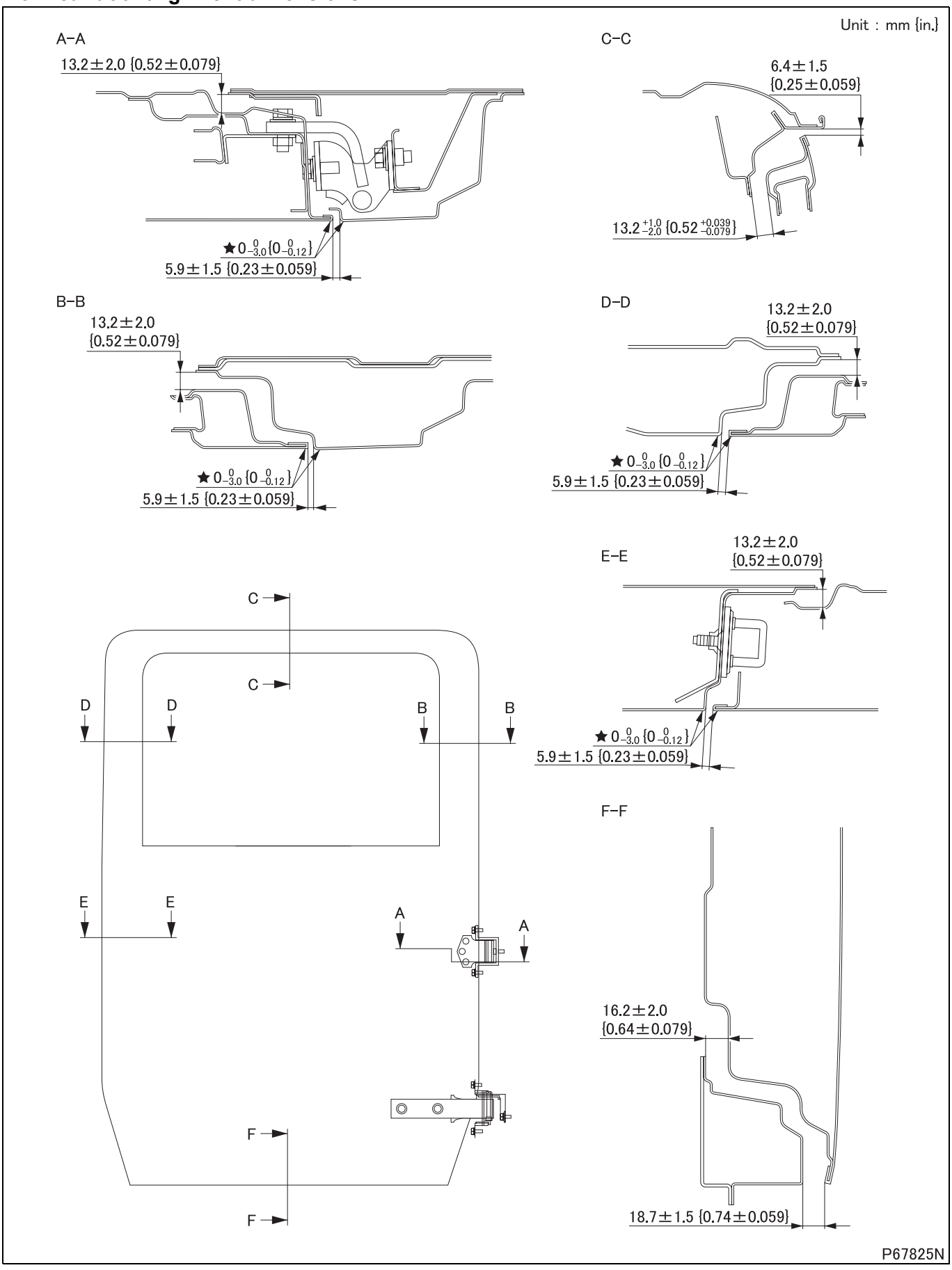

★: Flushness dimension (+ for outside of cab; – for inside of cab)

M E M O

FRONT DOOR

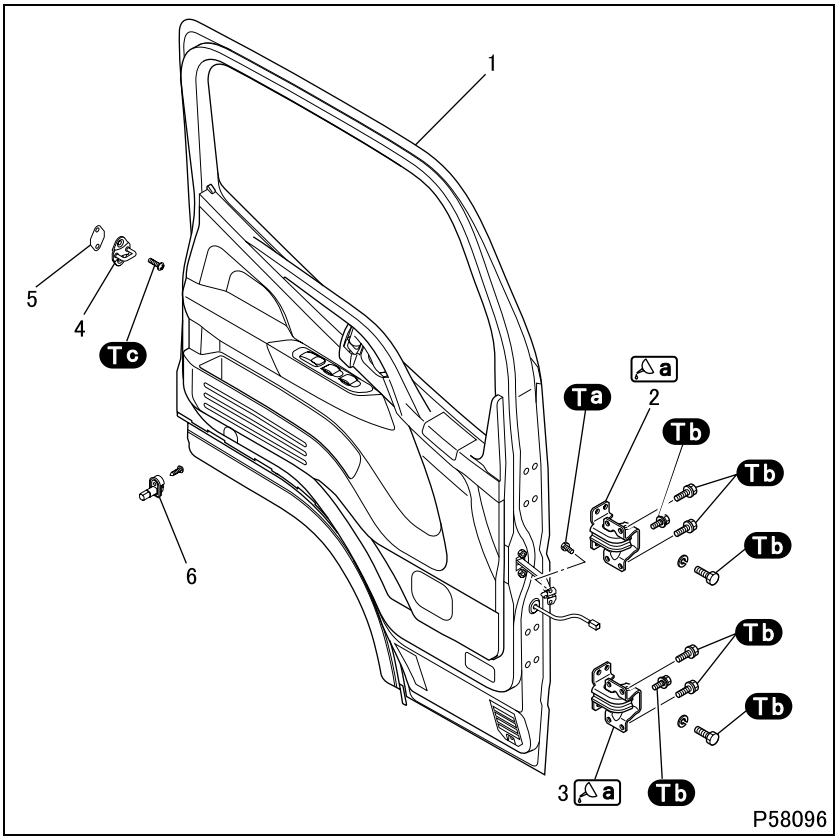

●Removal sequence

1 Door (See later section.)
2 Upper hinge
3 Lower hinge
4 Striker
5 Striker shim
6 Door switch

●Installation sequence

Follow the removal sequence in reverse.

- Adjust front door alignment after installation. (See ON-VEHICLE INSPECTION AND ADJUSTMENT.)

Tightening torque (Unit: N·m {ft.lbs, kgf·m})

Mark	Parts to be tightened	Tightening torque	Remarks
Ta	Bolt (door mounting)	4 to 6 {2.9 to 4.3, 0.4 to 0.6}	–
Tb	Bolt (door mounting)	17 to 26 {12 to 19, 1.7 to 2.6}	–
	Bolt (upper and lower hinge mounting)		
Tc	Screw (striker mounting)	9 to 14 {6.5 to 10, 0.9 to 1.4}	–

Lubricant and/or sealant

Mark	Points of application	Specified lubricant and/or sealant	Quantity
a	Rotating contact parts of upper and lower hinges	Chassis grease [NLGI No. 1 (Li soap)]	As required

Door

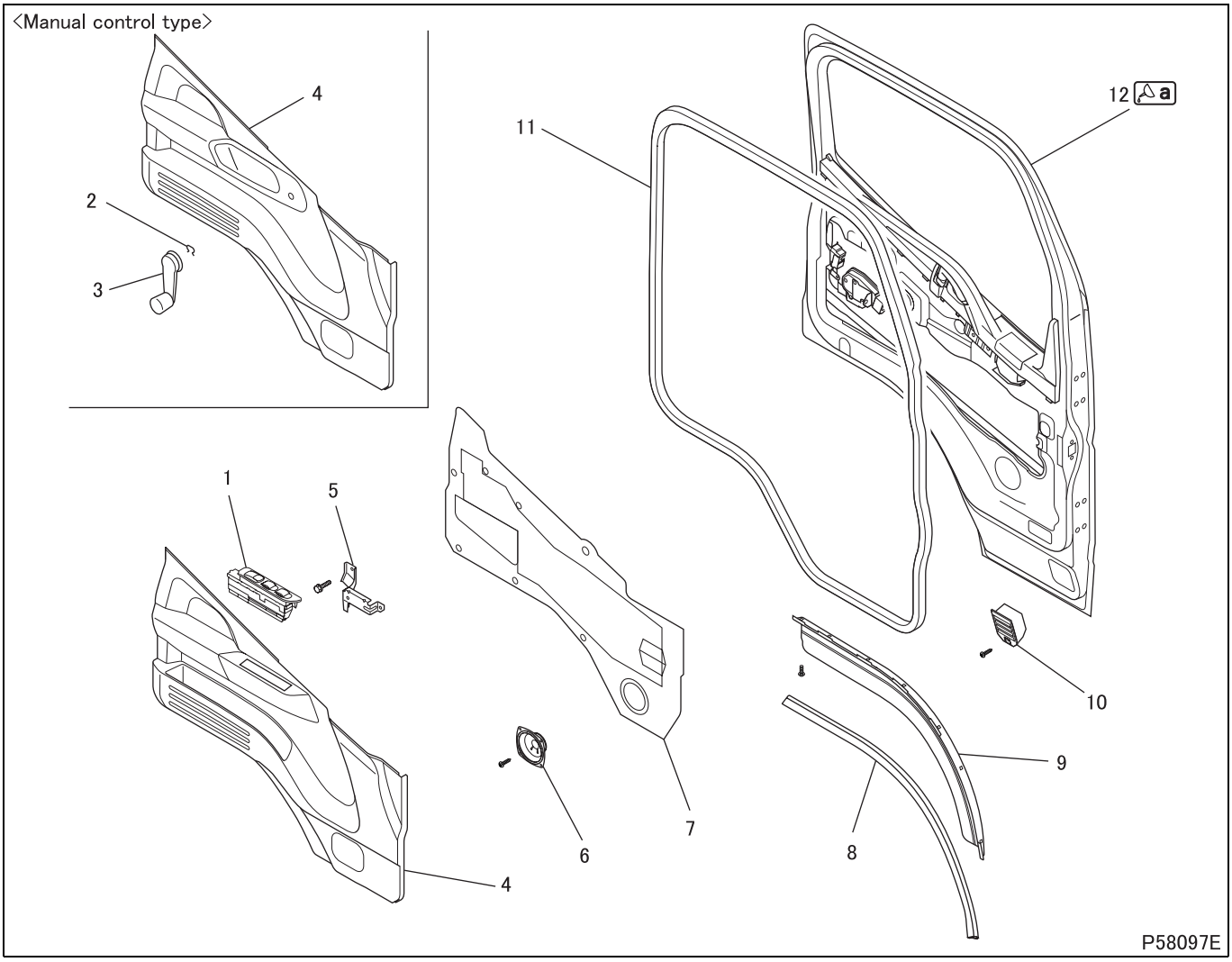

● Disassembly sequence

1 Power window switch
2 Clip
3 Regulator handle
4 Lower door trim
5 Trim bracket
6 Speaker
7 Water-proof cover
8 Weatherstrip <FE>
9 Door fender <FE>
10 Air outlet garnish
11 Weatherstrip
12 Door panel (See later section.)

● Assembly sequence

Follow the disassembly sequence in reverse.

Lubricant and/or sealant

Mark	Points of application	Specified lubricant and/or sealant	Quantity
a	Water-proof cover fitting surface of door Panel	Butyl tape	As required

◆Removal procedure◆

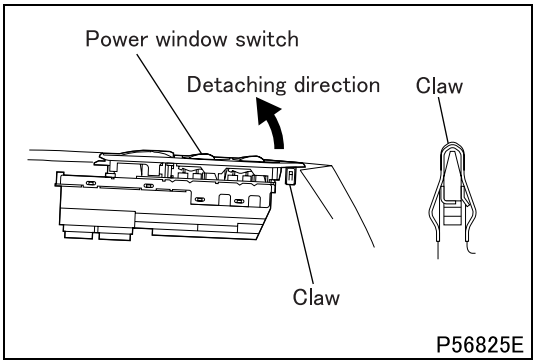

■Removal: Power window switch

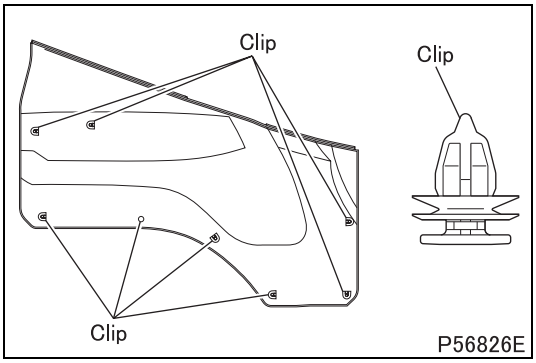

■Removal: Lower door trim

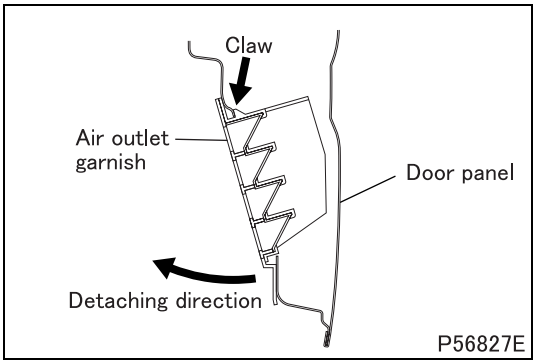

■Removal: Air outlet garnish

◆Installation procedure◆

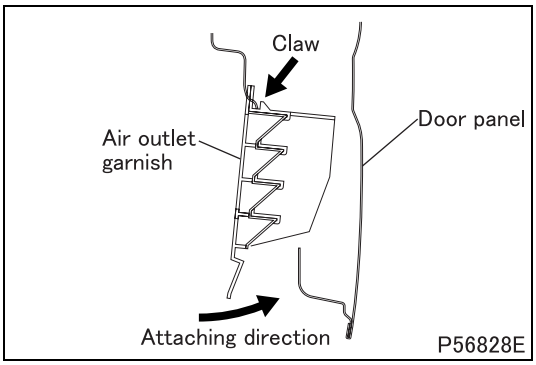

■Installation: Air outlet garnish

- Attach the air outlet garnish to the door panel in the illustrated direction, with its claw fitted in the door panel.

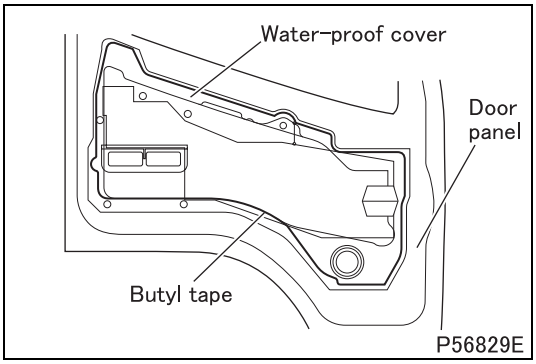

■**Installation: Water-proof cover**

- Apply butyl tape to the door panel as shown, then attach the water-proof cover to the door panel.

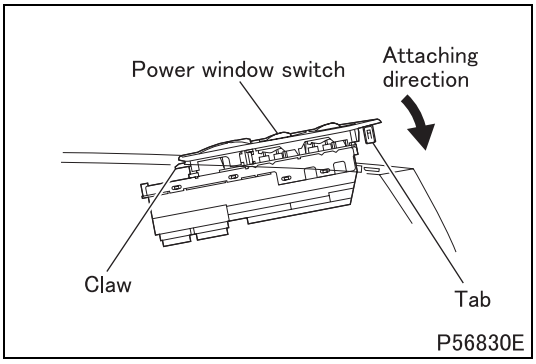

■**Installation: Power window switch**

- To install the power window switch in position, fit claw first, then tab, in the lower door trim.

FRONT DOOR

Door Panel Assembly

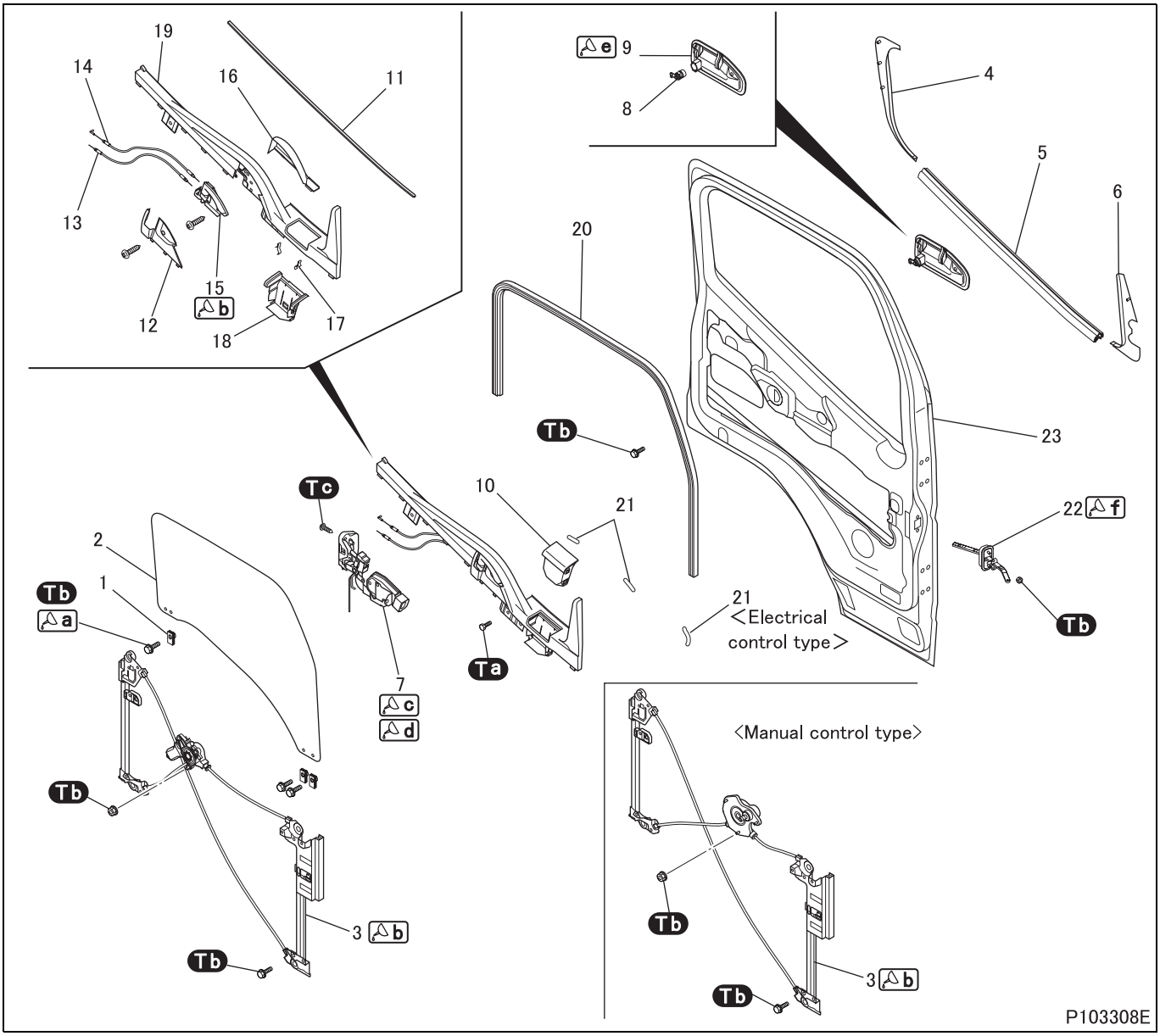

●Disassembly sequence

1 Glass holder
2 Door glass
3 Regulator and motor
Manual regulator
4 Sash garnish
5 Beltline molding
6 Delta garnish
7 Door lock actuator
<With auto door lock>
Door lock
<Without auto door lock>
8 Door lock cylinder
9 Outside handle
10 Ash tray
11 Weatherstrip
12 Inside handle inner cover
13 Inside lock cable
14 Inside open cable
15 Inside handle
16 Inside handle outer cover
17 Spring
18 Ash tray cover
19 Upper door trim
20 Runchannel
21 Protector
22 Door check
23 Door panel

●Assembly sequence

Follow the disassembly sequence in reverse.

Tightening torque (Unit: N·m {ft.lbs, kgf·m})

Mark	Parts to be tightened	Tightening torque	Remarks
Ta	Bolt (upper door trim attaching)	10 to 15 {7.2 to 11, 1.0 to 1.5}	–
Tb	Bolt (door glass attaching)	4 to 6 {2.9 to 4.3, 0.4 to 0.6}	Sealant
	Nut (regulator and motor or manual regulator attaching)		–
	Bolt (regulator and motor or manual regulator attaching)		
	Bolt (outside handle attaching)		
	Nut (door check attaching)		
Tc	Screw (door lock attaching)	4.9 to 8.2 {3.7 to 6.1, 0.51 to 0.84}	–

Lubricant and/or sealant

Mark	Points of application	Specified lubricant and/or sealant	Quantity
a	Bolt threads	Loctite Dri-Loc 202	As required
b	Sliding contact surface of regulator and motor assembly or regulator	Kyodo Yushi MULTEMP AC-D	As required
c	Rotating contact surface of door lock	Kyodo Yushi MULTEMP TAS-2	As required
d	Sliding contact surface of door lock	Kyodo Yushi MULTEMP SL-DII	As required
e	Rotating contact surface of outside handle	Showa Shell Sekiyu SUNLITE GREASE LA2	As required
	Rotating contact surface of inside handle		
f	Sliding contact surface of door check	Kyodo Yushi EMALUB M	1 g {0.035 oz}

◆ Removal sequence ◆

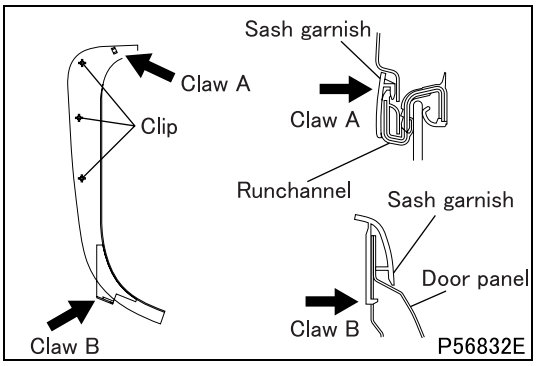

■Removal: Sash garnish

- Disengage claw A on upper part of the sash garnish from the runchannel, then remove clips (3 places).
- Disengage claw B on the lower part of the sash garnish from the door panel.

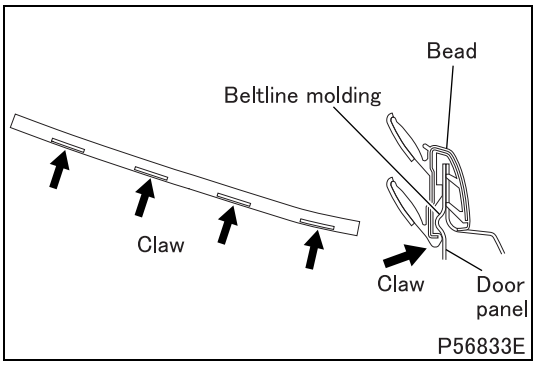

■Removal: Beltline molding

- Disengage claws (4 places) and remove the beltline molding from the door panel bead.

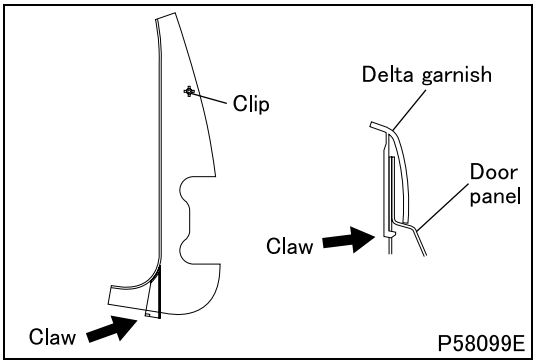

■**Removal: Delta garnish**

- Disengage clip (1 place) first and then claw to remove the delta garnish from the door panel.

◆**Installation procedure**◆

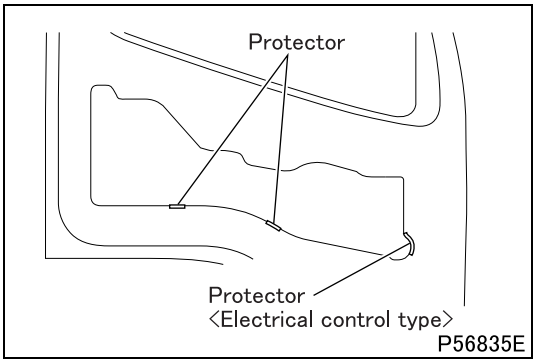

■**Installation: Protector**

- Fit the protectors (three on electrical control type; two on manual control type) to the door panel in the illustrated positions.

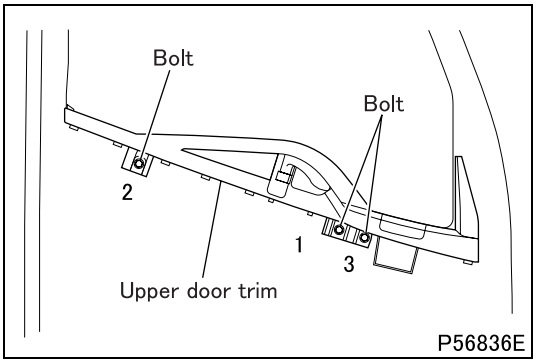

■**Installation: Upper door trim**

- Tighten bolts to specified torque in numerical order (1 to 3) as shown to secure the upper door trim.

■**Installation: Delta garnish**

- To install the delta garnish, follow the removal procedure in reverse.
  (See **"■Removal: Delta garnish"**.)

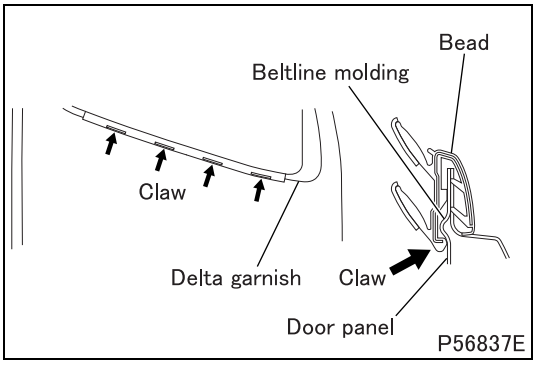

■**Installation: Beltline molding**

- Position the beltline molding with its front side applied to the delta garnish, then engage claws (4 places) with the door panel bead to secure the beltline molding in place.

■**Installation: Sash garnish**

- To install the sash garnish, follow the removal procedure in reverse.
  (See **"■Removal: Sash garnish"**.)

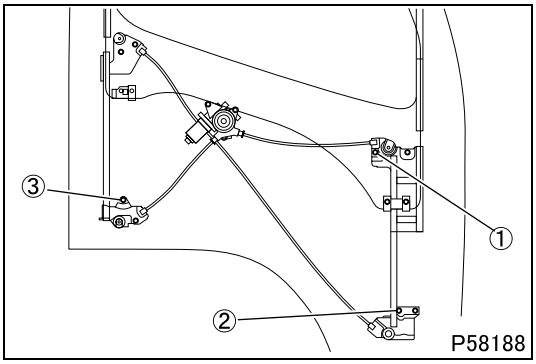

■**Installation: Regulator and motor or manual regulator**

- Tighten bolts (3 places) to specified torque in numerical order (1 to 3) as shown, then tighten the remaining bolts and nuts to specified torque.

REAR DOOR <CREW CAB>

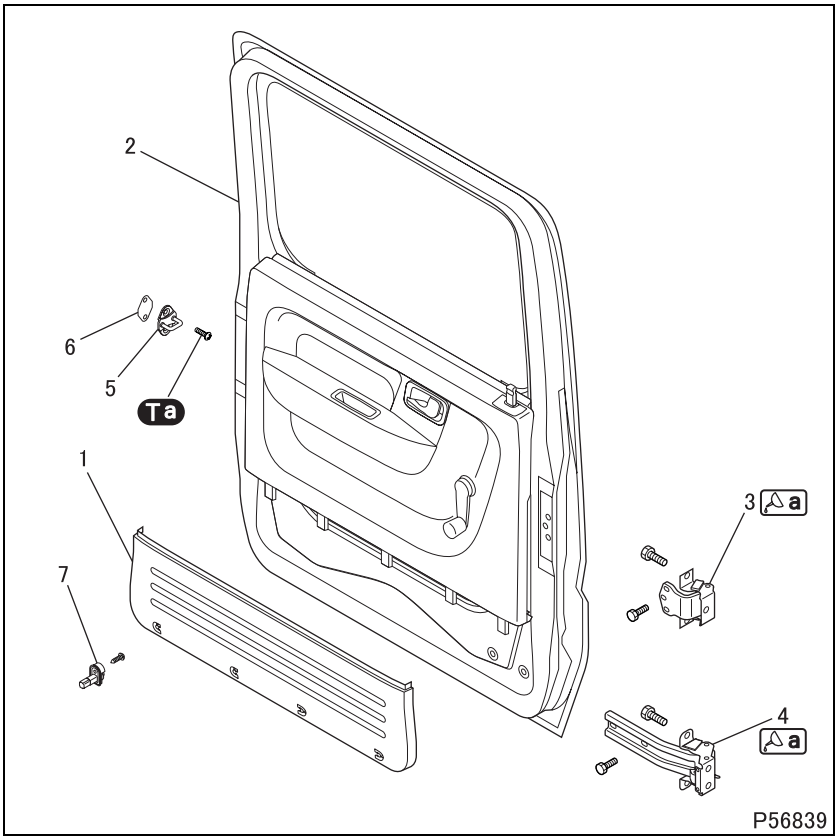

●Removal sequence

1 Lower door trim
2 Door
3 Upper hinge
4 Lower hinge
5 Striker
6 Strike shim
7 Door switch

●Installation sequence

Follow the removal sequence in reverse.

- Adjust rear door alignment after installation. (See ON-VEHICLE INSPECTION AND ADJUSTMENT.)

Tightening torque (Unit: N·m {ft.lbs, kgf·m})

Mark	Parts to be tightened	Tightening torque	Remarks
Ta	Screw (striker attaching)	9 to 14 {6.5 to 10, 0.9 to 1.4}	–

Lubricant and/or sealant

Mark	Points of application	Specified lubricant and/or sealant	Quantity
a	Rotating contact surfaces of upper and lower hinges	Chassis grease [NLGI No. 1 (Li soap)]	As required

◆Removal procedure◆

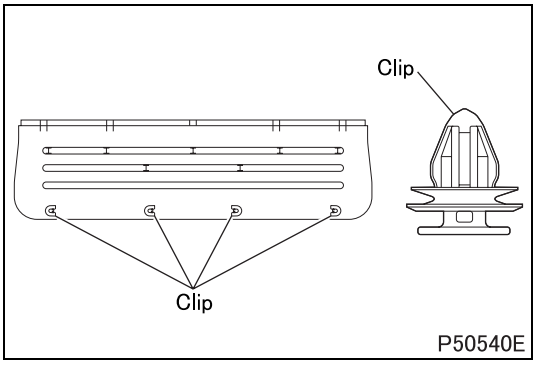

■Removal: Lower door trim

M E M O

REAR DOOR <CREW CAB>

Door Assembly

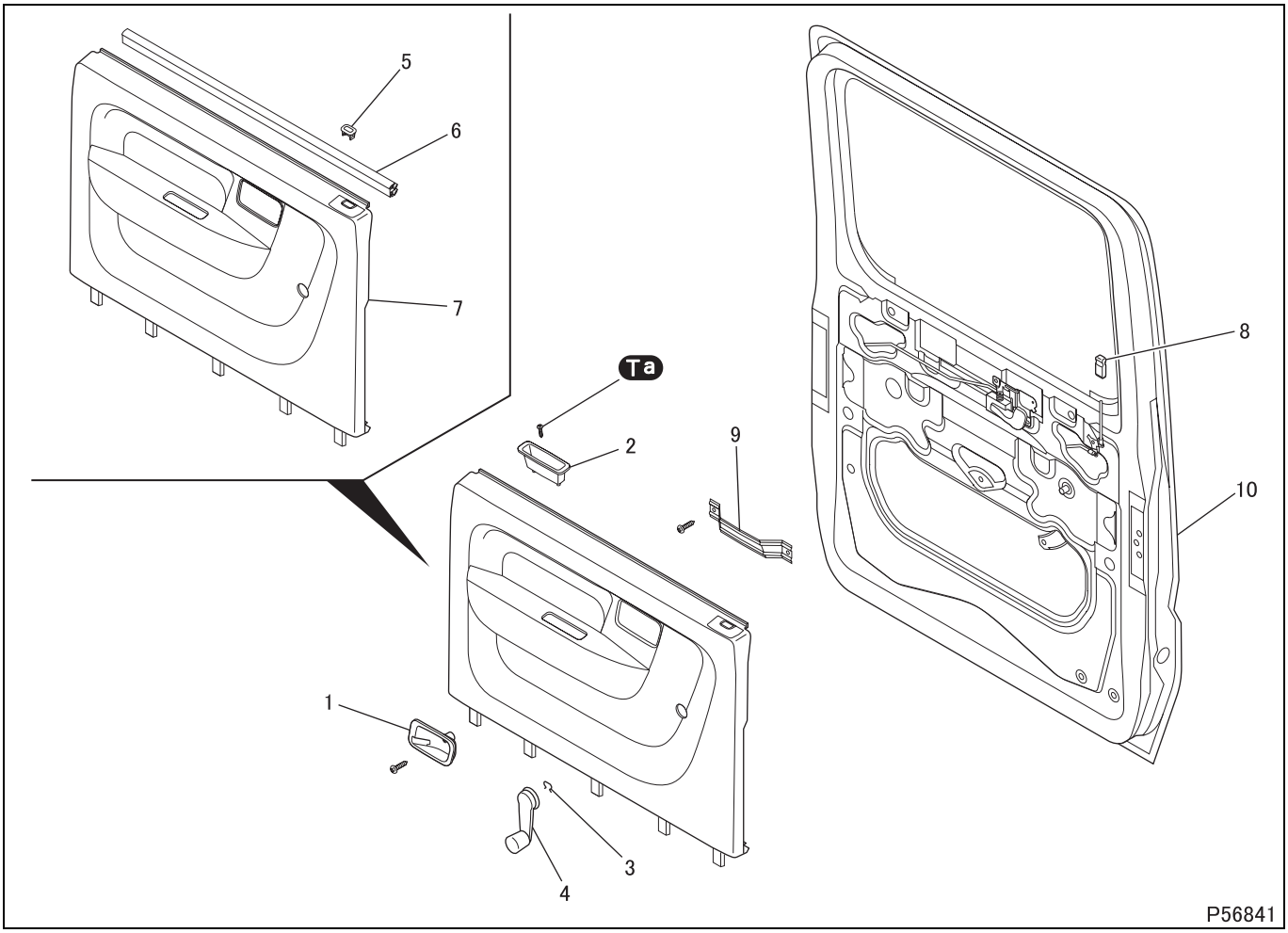

●Disassembly sequence

1 Inside handle cover
2 Pull handle cover
3 Clip
4 Regulator handle
5 Bushing
6 Weatherstrip
7 Upper door trim
8 Inside lock knob
9 Pull handle bracket
10 Door panel

●Assembly sequence

Follow the disassembly sequence in reverse.

Tightening torque (Unit: N·m {ft.lbs, kgf·m})

Mark	Parts to be tightened	Tightening torque	Remarks
Ta	Screw (pull handle cover attaching)	2 to 3 {1.4 to 2.1, 0.2 to 0.3}	–

◆Removal procedure◆

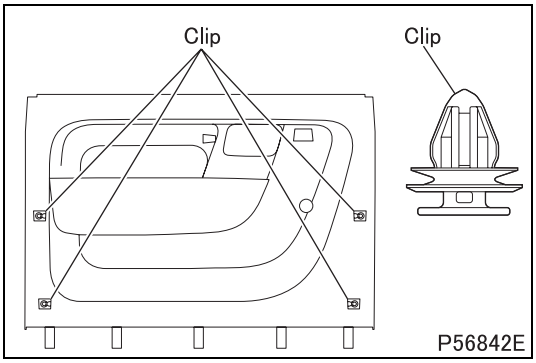

■Removal: Upper door trim

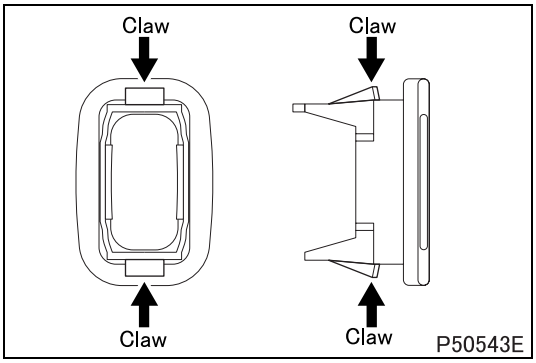

■Removal: Bushing

◆Installation procedure◆

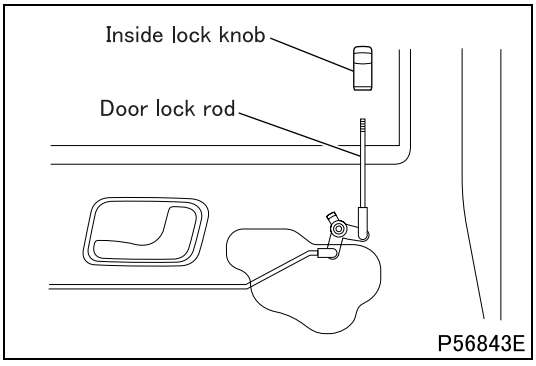

■Installation: Inside lock knob

- Screw the inside lock knob all the way onto the door lock rod, then back it up 1 or 2 turns.

REAR DOOR <CREW CAB>

Door Panel Assembly

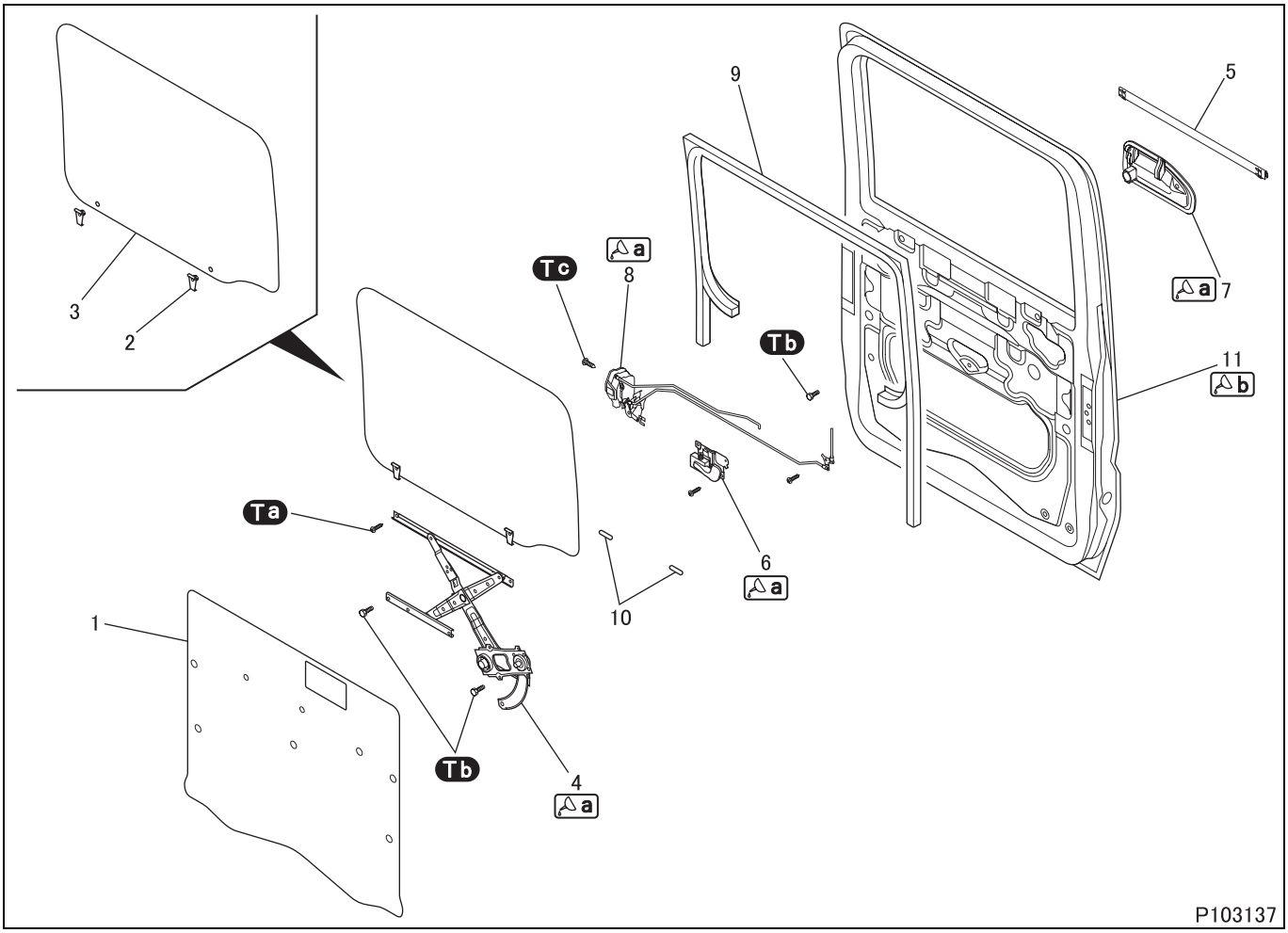

●Disassembly sequence

1 Water-proof cover
2 Glass holder
3 Door glass
4 Regulator
5 Beltline molding
6 Inside handle
7 Outside handle
8 Door lock
9 Runchannel
10 Protector
11 Door panel

●Assembly sequence

Follow the disassembly sequence in reverse.

Tightening torque (Unit: N·m {ft.lbs, kgf·m})

Mark	Parts to be tightened	Tightening torque	Remarks
Ta	Screw (door glass attaching)	1.8 to 2.5 {1.3 to 1.8, 0.18 to 0.25}	–
Tb	Bolt (regulator attaching)	4 to 6 {2.9 to 4.3, 0.4 to 0.6}	–
	Bolt (outside handle attaching)		
Tc	Screw (door lock attaching)	4.9 to 8.2 {3.6 to 6.1, 0.5 to 0.84}	–

Lubricant and/or sealant

Mark	Points of application	Specified lubricant and/or sealant	Quantity
a	Sliding contact surface of regulator	DYNAMIC GB	As required
b	Rotating contact surface of inside handle	Showa Shell Sekiyu SUNLITE GREASE LA2	As required
	Rotating contact surface of outside handle		
c	Rotating and sliding contact surfaces of door lock	Kyodo Yushi MULTEMP TAS-2	As required
d	Water-proof cover attaching surface of door panel	Butyl tape	As required

◆Removal procedure◆

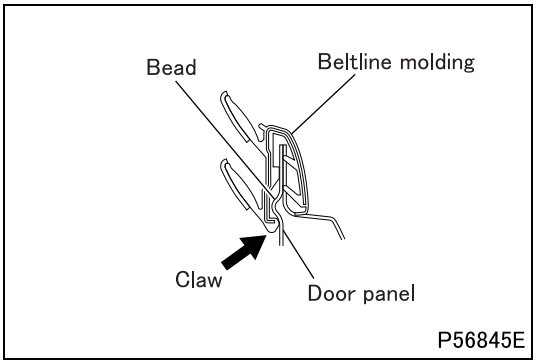

■Removal: Beltline molding

- Disengage claws (4 places) from the door panel bead to remove the beltline molding from the door panel.

◆Installation procedure◆

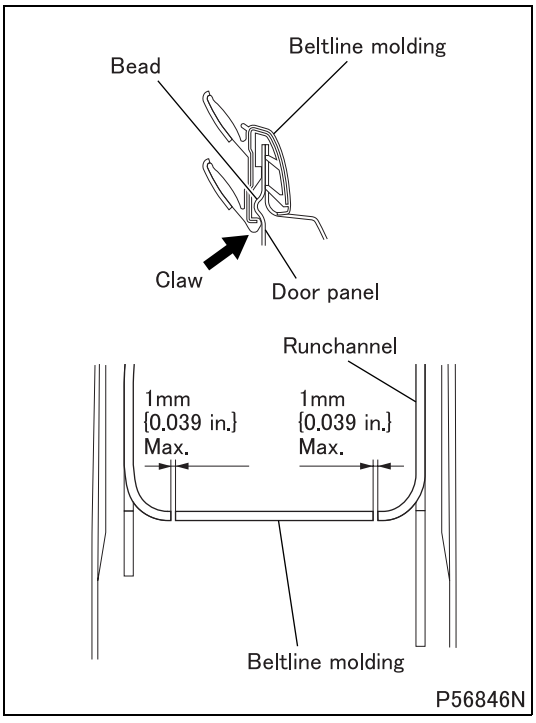

■Installation: Beltline molding

- Engage hooks (4 places) with the door panel bead to install the beltline molding to the door panel. Gaps between beltline molding and runchannel should be as shown.
- Make sure that the cover is tight at both ends of the belt line molding.

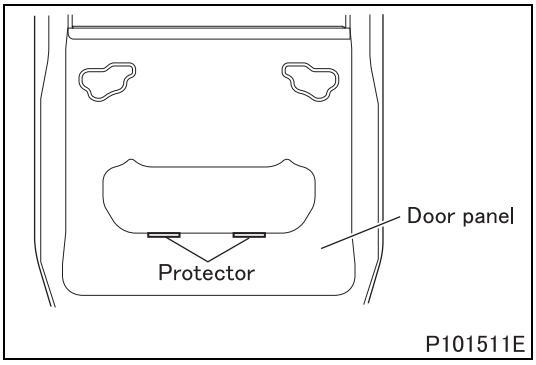

■Installation: Protector

- Fit the protectors to the door panel in the illustrated positions.

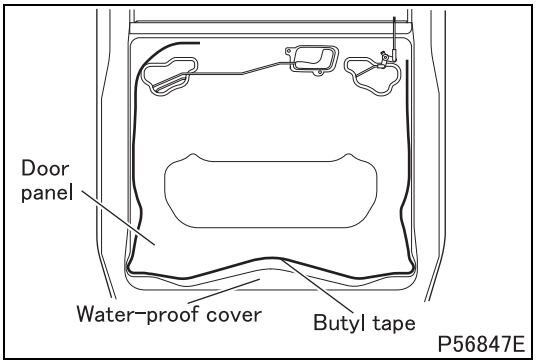

■**Installation: Water-proof cover**

- Apply butyl tape to the door panel as shown, and attach the water-proof cover to the door panel.

Group 51

Exterior

Table of Contents

Back

Home

MITSUBISHI FUSO TRUCK OF AMERICA, Inc.

Pub.No.TWSE0713-51

INDEX

STRUCTURE AND OPERATION
1. Wiper and Washer System 51-2

TROUBLESHOOTING 51-3

MIRROR 51-4

WIPER AND WASHER 51-6

FRONT COVER 51-8

FRONT GRILLE, FRONT CORNER PANEL AND HEADLAMP 51-10

FENDER 51-14

STEP 51-16

GARNISH <CREW CAB> 51-18

WHEEL HOUSE 51-19

WINDOW GLASS 51-20

1. Wiper and Washer System

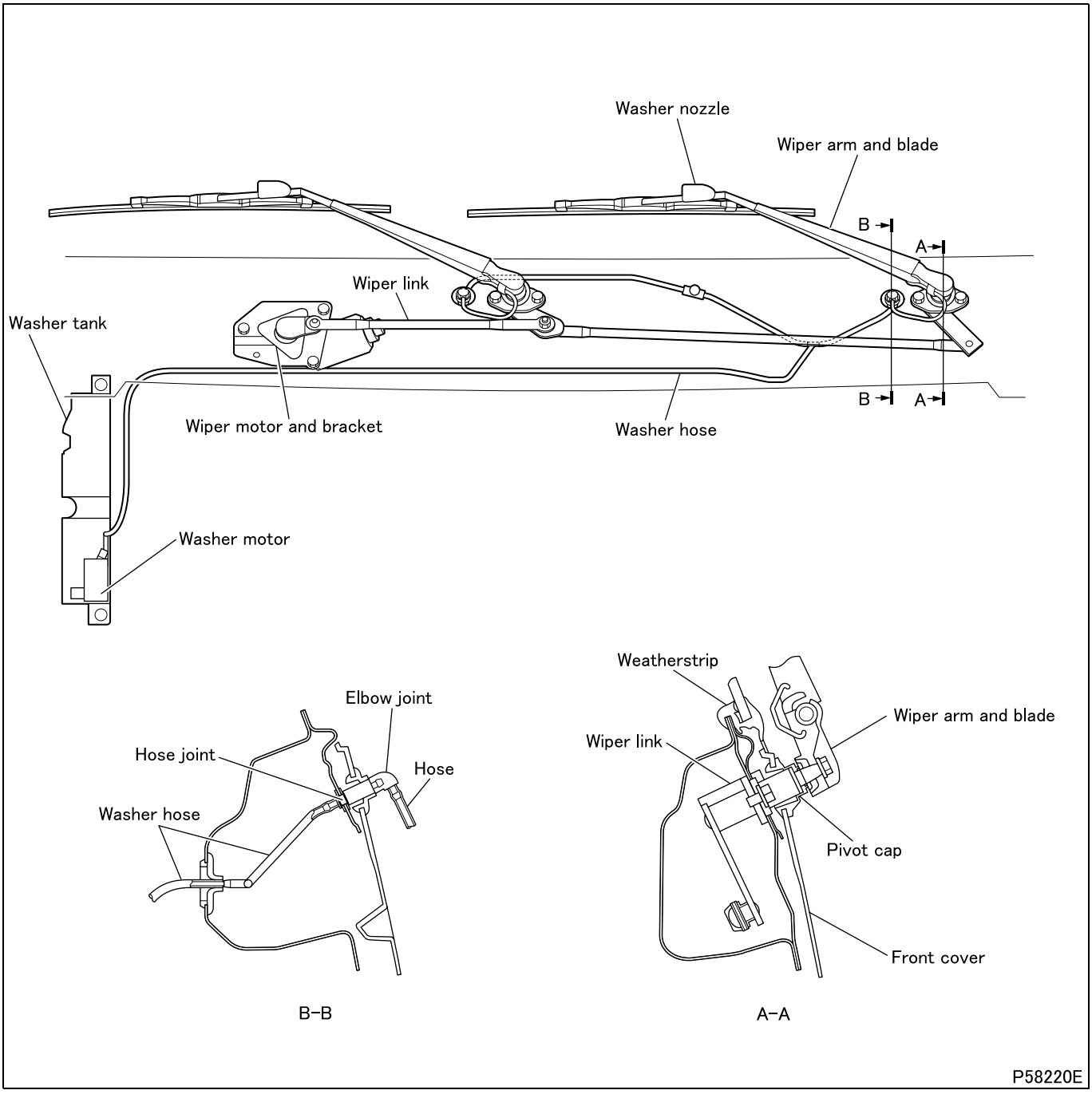

Wiper and washer

Symptoms / Possible causes	Wiper fails to operate	Wiper fails to stop	Wiper fails to operate intermittently	Wiper blade stops at improper position	Wiper does not wipe well	Wiper emits noise during operation	Washer motor fails to operate	Washer injects insufficient amount of fluid	Washer fails to inject washer fluid	Wiper fails to operate in unison with washer	Reference Gr
Wiper motor faulty	O	O		O		O					Gr54
Washer motor faulty							O	O	O		
Wiper and washer switch faulty	O	O	O				O			O	
MUTIC (control unit) faulty			O							O	
Wiper relay faulty	O						O				
Fuse/high current fuse blown	O						O				
Connector improperly connected, harness open-circuited, grounding improper	O		O				O		O	O	
Wiper motor crank arm out of position				O							
Wiper link and wiper arm improperly connected						O					
Wipe blade defective					O	O					
Wiper arm defective					O						
Washer hose twisted								O	O		
Washer hose improperly connected								O	O		
Washer nozzle clogged								O	O		
Washer fluid insufficient									O		

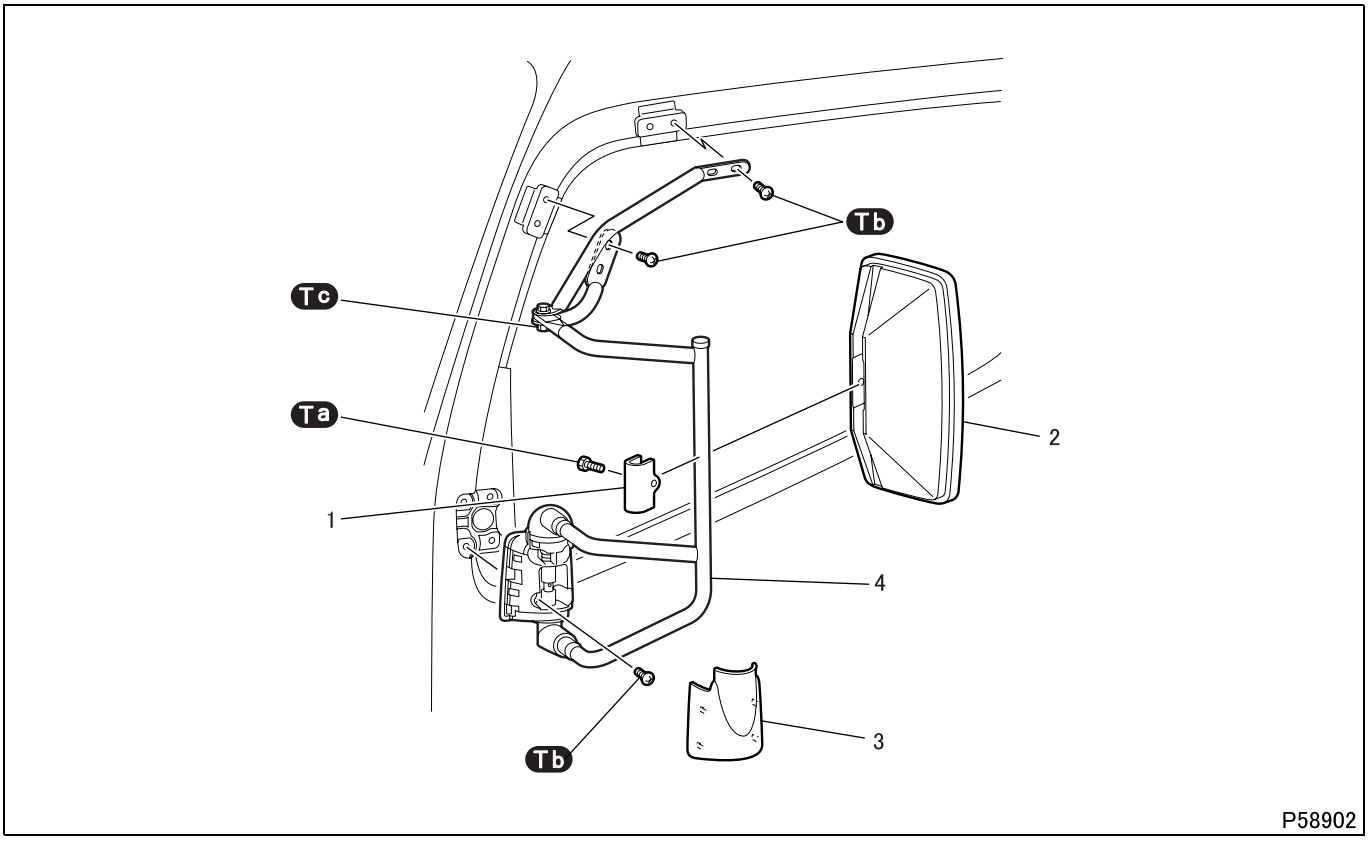

●Disassembly sequence

1 Clamp
2 Mirror
3 Cover
4 Mirror stay

●Assembly sequence

Follow the disassembly sequence in reverse.

Tightening torque (Unit: N·m {ft.lbs, kgf·m})

Mark	Parts to be tightened	Tightening torque	Remarks
Ta	Bolt (mirror mounting)	6.5 to 7.2 {4.8 to 5.3, 0.66 to 0.73}	–
Tb	Screw (mirror stay mounting)	9 to 14 {6.6 to 10, 0.9 to 14}	–
Tc	Nut (mirror stay fastening)	19 to 28 {14 to 21, 1.9 to 2.9}	–

◆Removal procedure◆

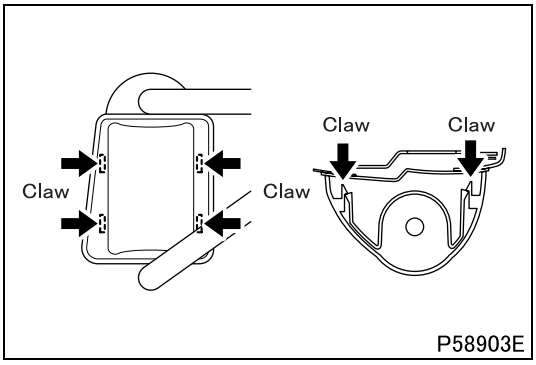

■Removal: Cover

◆Installation procedure◆

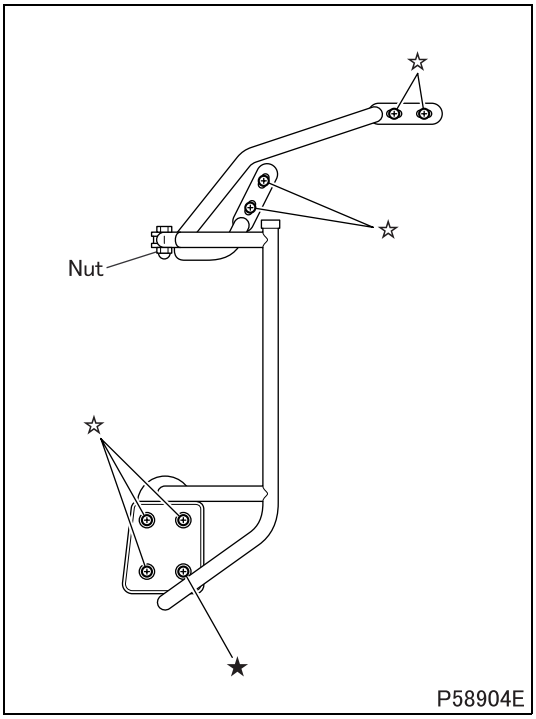

■Installation: Mirror stay

- Install the one screw marked ★ and adjust the position of the mirror stay.
- Install all the remaining seven screws marked ☆ to secure the mirror stay.
- Fasten the mirror stay nut to the specified torque.

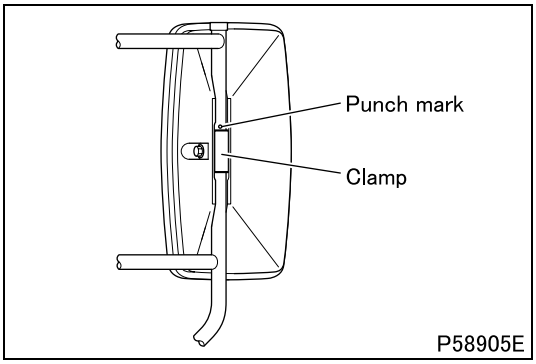

■Installation: Mirror

- Adjust the height of the mirror by aligning the punch mark on the mirror stay with the clamp edge as shown in the illustration.

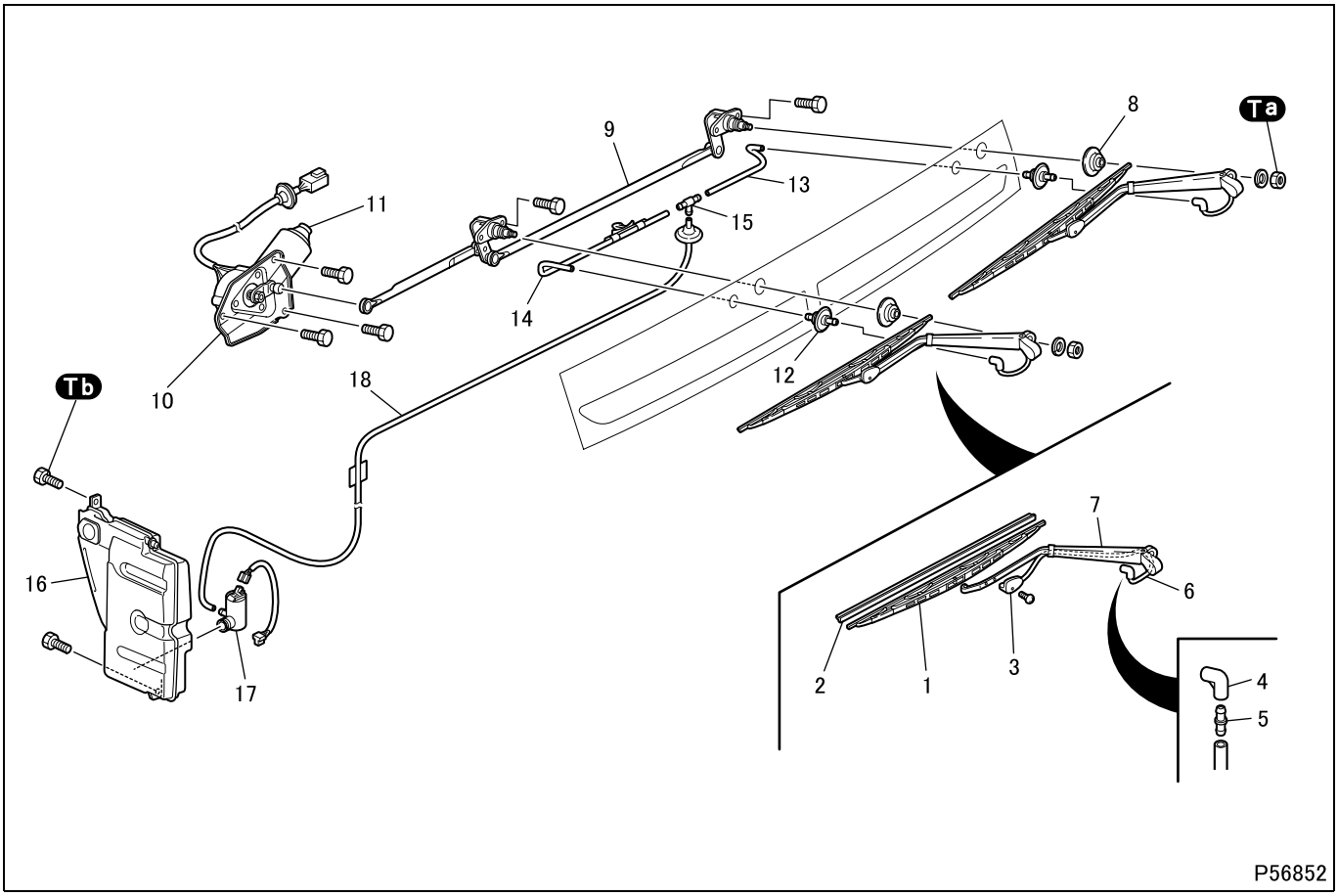

●Disassembly sequence

1 Wiper blade
2 Blade rubber
3 Washer nozzle
4 Elbow joint
5 Joint
6 Hose
7 Wiper arm
8 Pivot cap
9 Wiper link
10 Wiper motor bracket
11 Wiper motor
12 Joint
13 Washer hose
14 Washer hose
15 Joint
16 Washer tank
17 Washer motor
18 Washer hose

NOTE

- **Before disconnecting the connector to remove the wiper motor, pull out cab side harness enough, otherwise it will fall in the cab side and cannot be taken out without removing the instrument panel.**

●Assembly sequence

Follow the disassembly sequence in reverse.

Service standards

Location	Maintenance item	Standard value	Limit	Remedy
7	Wiper arm force to press blade against windshield	6.2 ± 0.5 N {1.4 ± 0.11 lbs, 0.63 ± 0.05 kgf}	–	Replace

Tightening torque (Unit: N·m {ft.lbs, kgf·m})

Mark	Parts to be tightened	Tightening torque	Remarks
Ta	Nut (wiper arm and blade attaching)	10.8 to 15.7 {8.0 to 12, 1.1 to 1.6}	–
Tb	Bolt (washer tank attaching)	7.8 to 11.8 {5.8 to 8.7, 0.8 to 1.2}	–

◆Inspection procedure◆

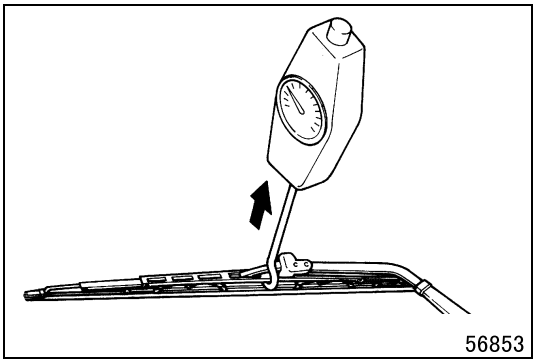

■Inspection: Wiper arm

- Measure the wiper arm force to press the blade against the windshield.
- If the measurement deviates from the standard value, replace the wiper arm.

◆Installation procedure◆

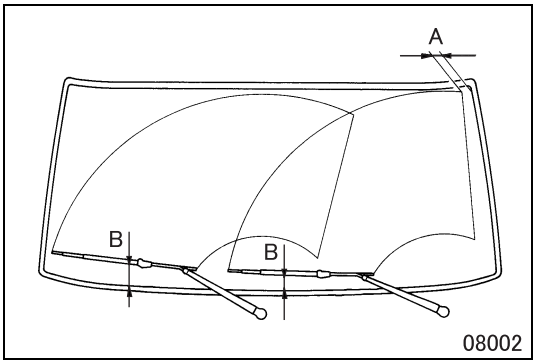

■Installation: Wiper arm and blade

- Install the wiper arm and blade so that the blades come to the illustrated points as much as A and B apart from the edge of weatherstrip.
  A: 50 mm {1.97 in.}
  B: 59 ± 5 mm {2.3 ± 0.20 in.}

FRONT COVER

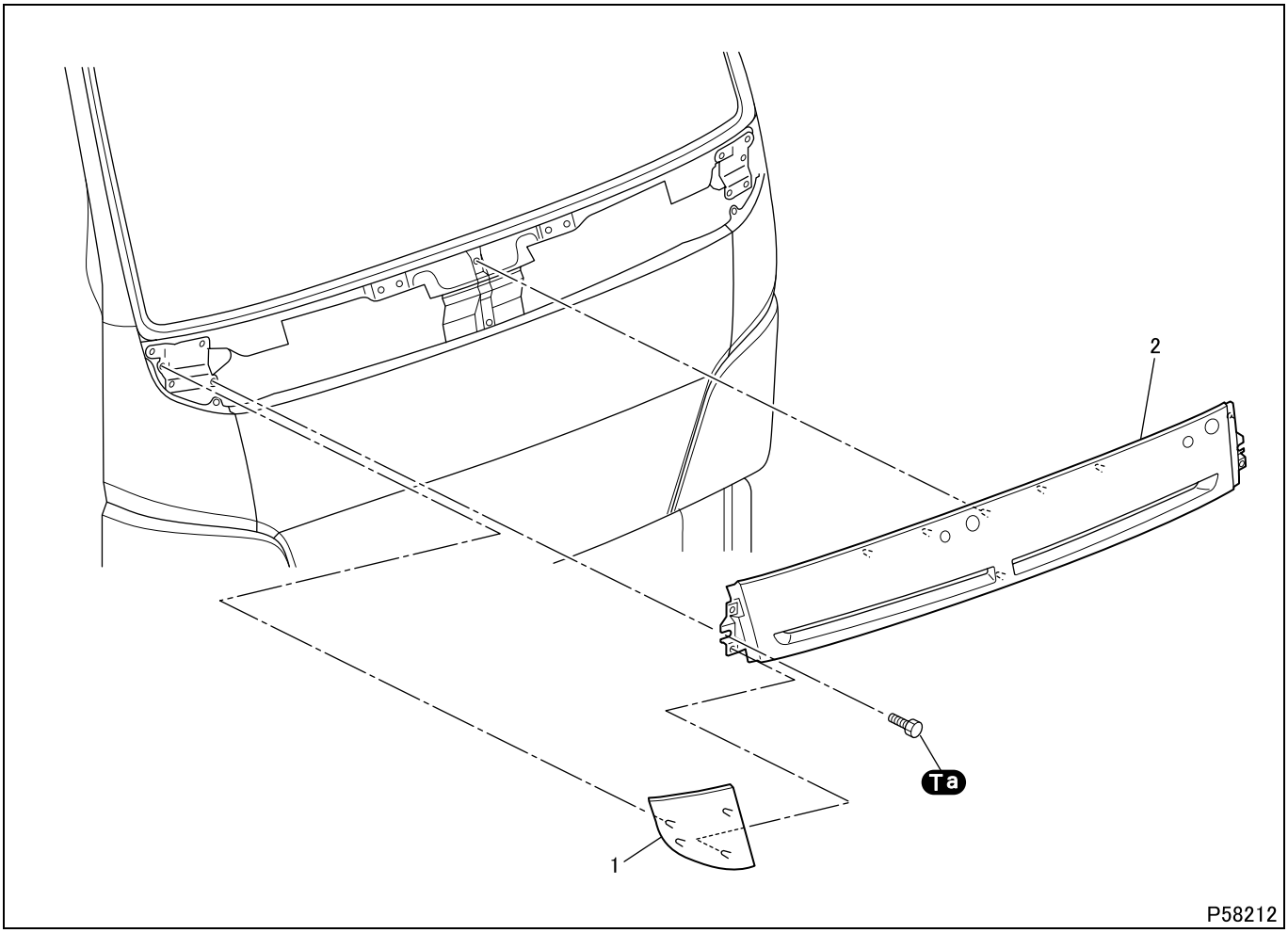

● **Disassembly sequence**

1 Front side cover
2 Front cover

● **Assembly sequence**

Follow the disassembly sequence in reverse.

Tightening torque (Unit: N·m {ft.lbs, kgf·m})

Mark	Parts to be tightened	Tightening torque	Remarks
Ta	Bolt (front cover attaching)	9 to 14 {6.6 to 10, 0.9 to 1.4}	–

◆Removal procedure◆

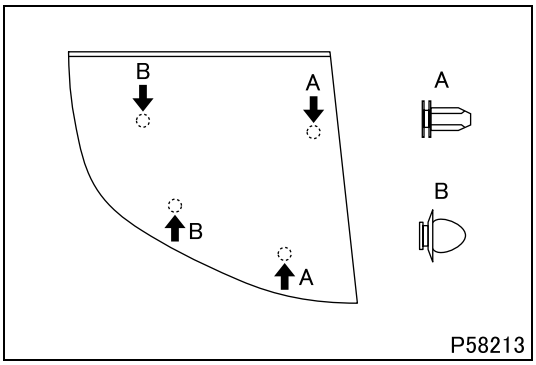

■Removal: Front side cover

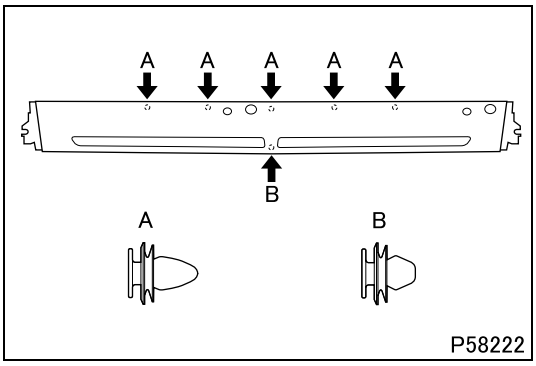

■Removal: Front cover

FRONT GRILLE, FRONT CORNER PANEL AND HEADLAMP

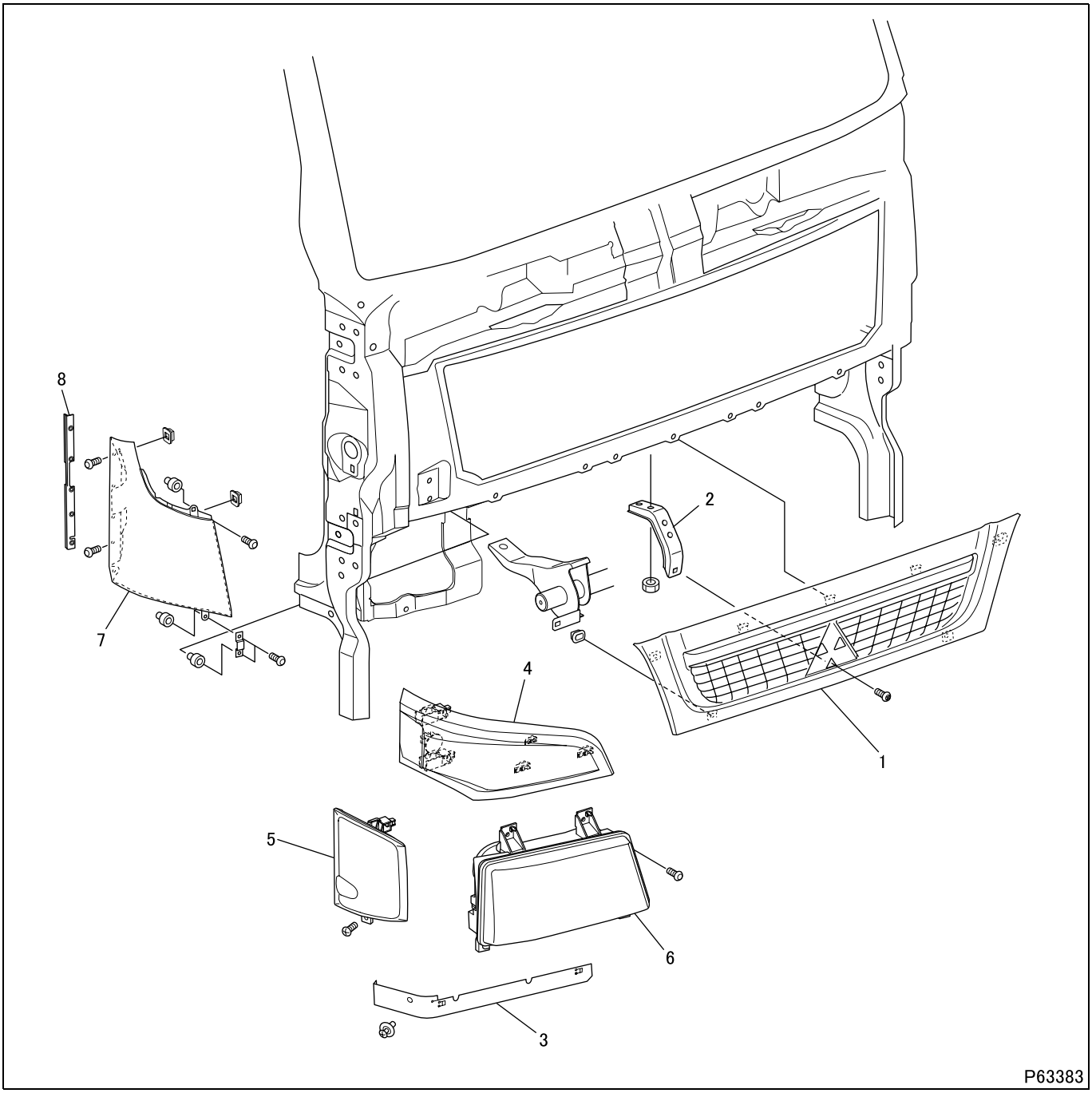

● **Disassembly sequence**

1 Front grille
2 Bracket
3 Lamp rubber
4 Turn signal lamp
5 Dummy lamp
6 Headlamp
7 Front corner panel
8 Door opening seal

CAUTION ⚠

- **Do not attempt to forcedly remove lamp rubber, turn signal lamp, dummy lamp and headlamp. Their mounting claws could be damaged.**

NOTE

- **Do not remove door opening seal unless absolutely necessary.**

● **Assembly sequence**

Follow the disassembly sequence in reverse.

◆Removal procedure◆

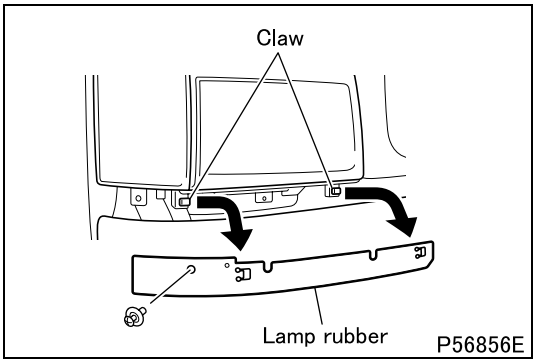

■**Removal: Lamp rubber**

- Slide the lamp rubber sideways to disengage from the claws of the headlamp.

CAUTION ⚠

- **Do not pull the lamp rubber to forcedly remove. It could be damaged.**

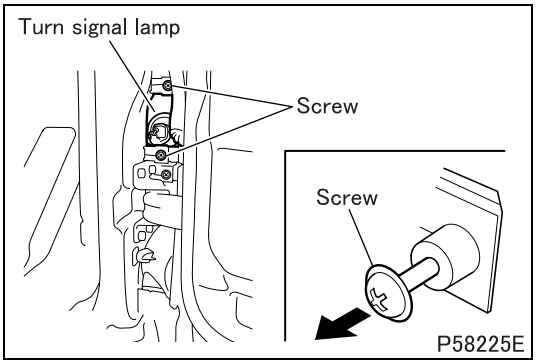

■**Removal: Turn signal lamp**

- Open the door. Loosen screws securing the turn signal lamp from behind to such an extent that they freely turn.
- Draw out the loosened screws.

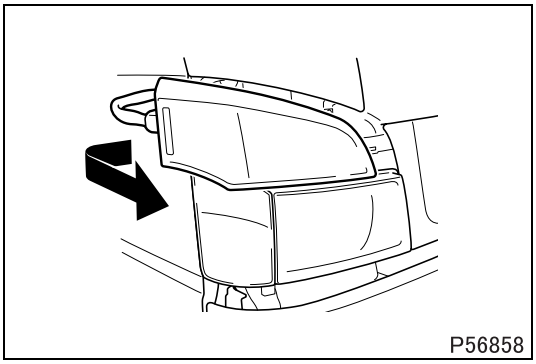

- Close the door. Move the turn signal lamp sideways to disengage its claws.
- Ascertain the disengagement of the claws, then pull out the turn signal lamp.

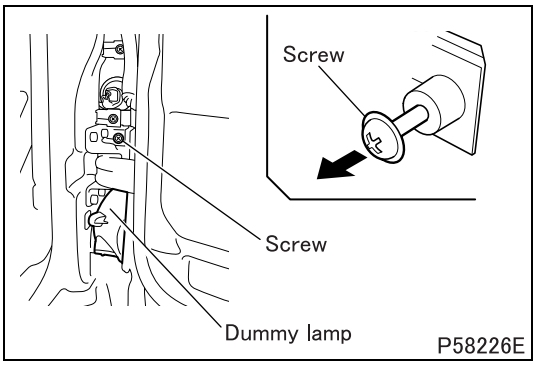

■**Removal: Dummy lamp**

- Open the door. Loosen screw securing the dummy lens from behind to such an extent that it freely turn.
- Pull out the loosened screw.

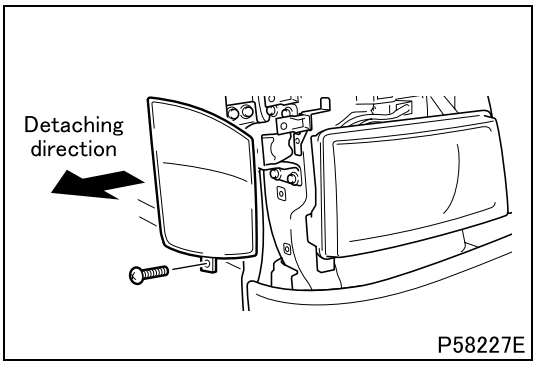

- Close the door, and remove the dummy lamp.

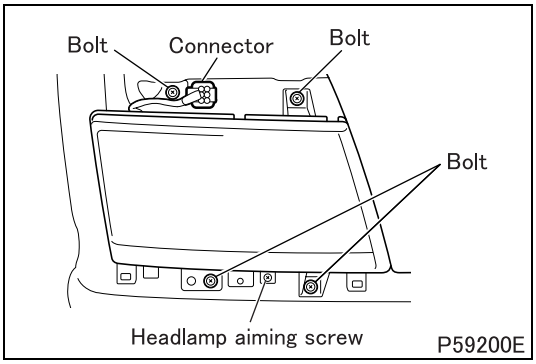

■Removal: Headlamp

CAUTION ⚠

- **The headlamp has aiming screw at the illustrated positions. Do not mistake them for mounting bolts.**

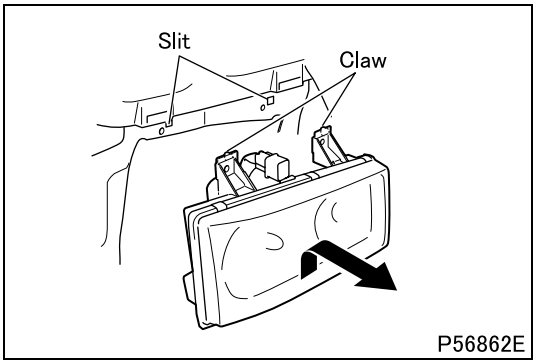

- Lift the headlamp a little to disengage its claws from the slits, then pull it out.

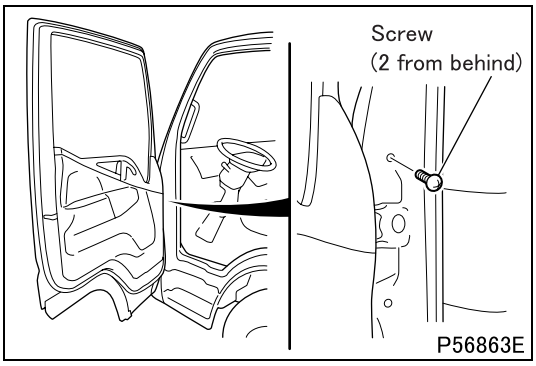

■Removal: Front corner panel

- Open the door. Remove two screws securing the front corner panel from behind.
- Close the door. Remove three screws securing the front corner panel from front.
- Remove the front corner panel.

◆Installation procedure◆

■Installation: Front corner panel

- Perform the removal procedure in reverse. (See **"■Removal: Front corner panel"**.)

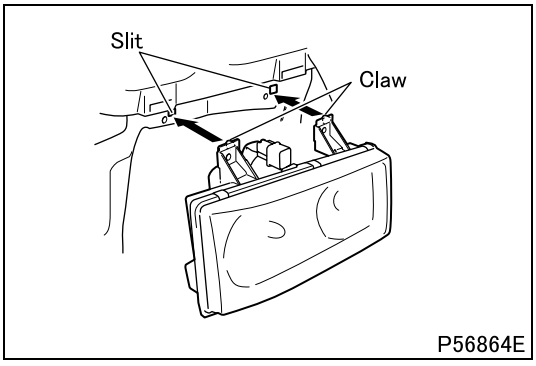

■Installation: Headlamp

- Install the headlamp with its claws inserted in the slits.

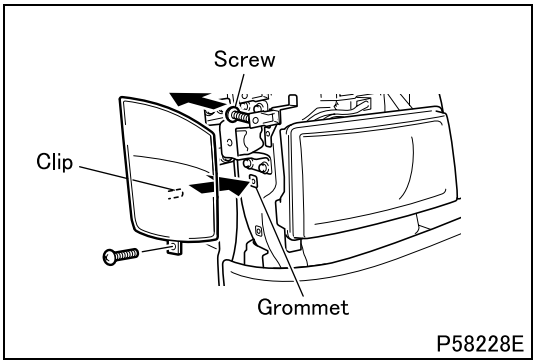

■Installation: Dummy lamp

- Check to see if the threaded portion of cab-side screw protrudes. If it does, move it out of the way in the illustrated direction.
- Insert the clip of the dummy lamp into the grommet.

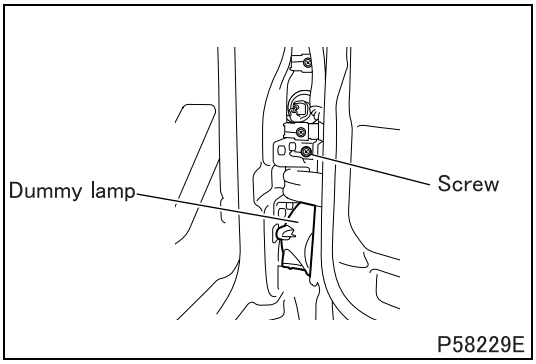

- Open the door. Tighten the screw securing the dummy lens from behind.

CAUTION ⚠

- **Do not overtighten the screw. Doing so may damage the dummy lamp.**

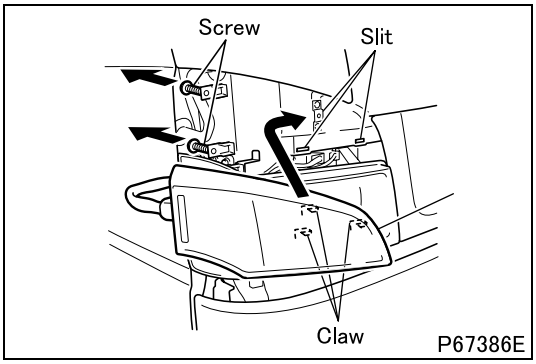

■Installation: Turn signal lamp

- Check to see if the threaded portions of screws protrude. If they protrude, move them out of the way in the illustrated direction.
- Put the claws of the turn signal lamp in the cab-side slits, then press-fit the lamp sideways into place.

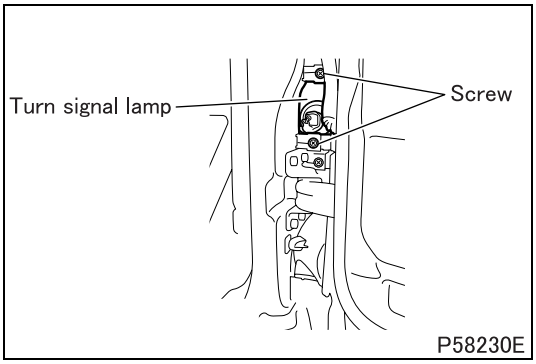

- Open the door, and secure the turn signal lamp by tightening screws from behind.

CAUTION ⚠

- **Do not open the door when the turn signal lamp is not seated completely. Doing so may damage the turn signal lamp.**
- **Do not overtighten the screws. Doing so may damage the turn signal lamp.**

■Installation: Lamp rubber

- Perform the removal procedure in reverse.
  (See **"■Removal: Lamp rubber"**.)

<FE>

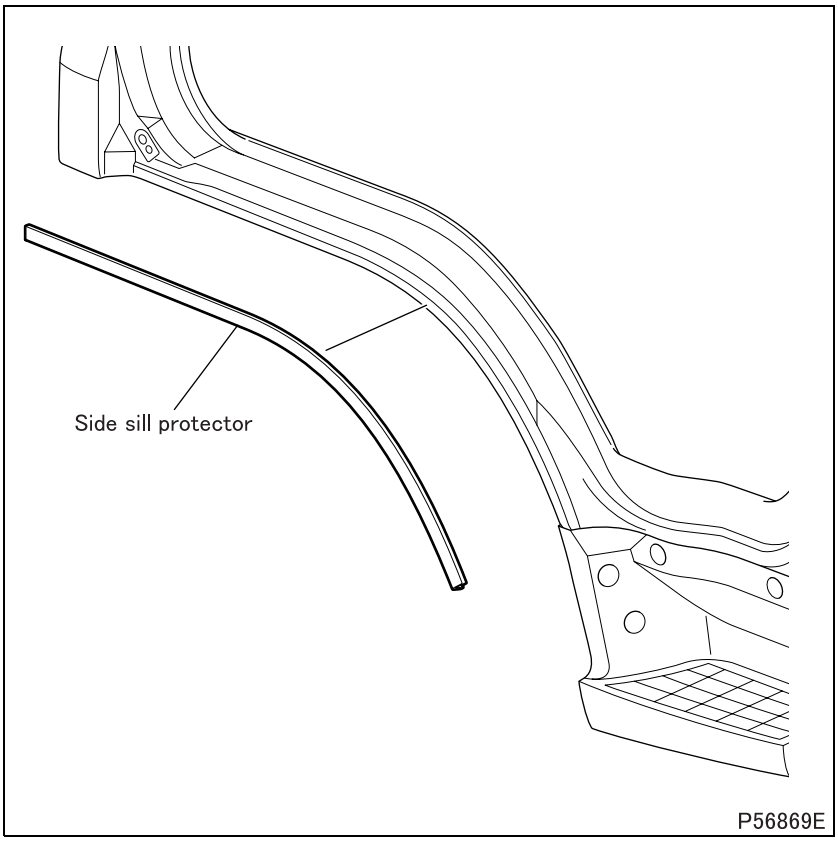

<FG>

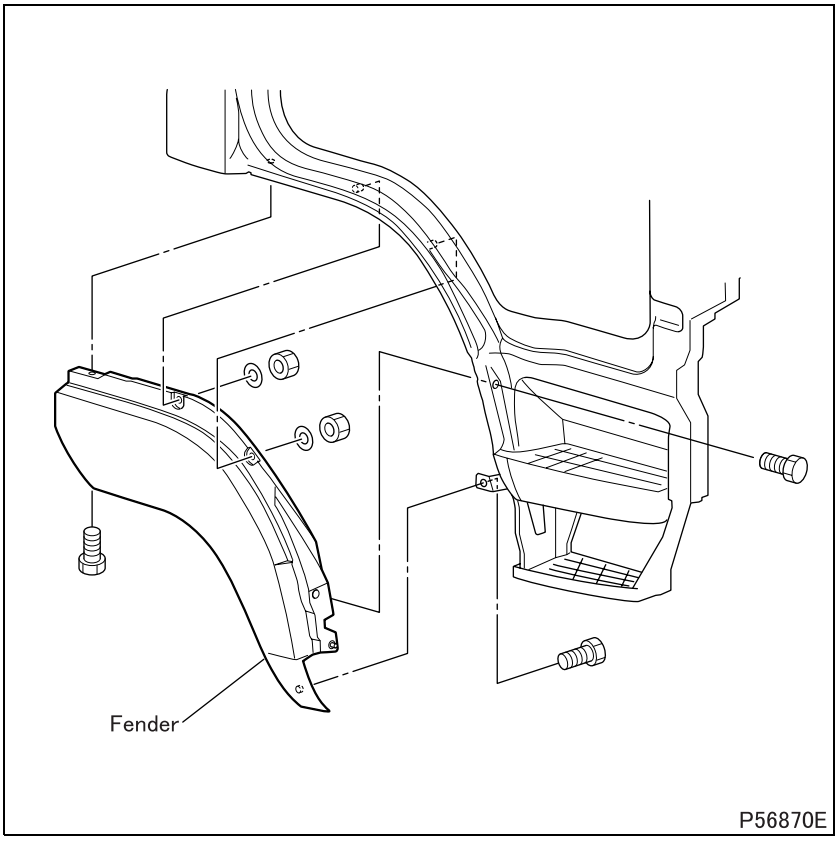

NOTE

- **For details on removal and installation of the fender, see Gr43.**
- **Attach the side sill protector using double-coated adhesive tape.**

M E M O

STEP

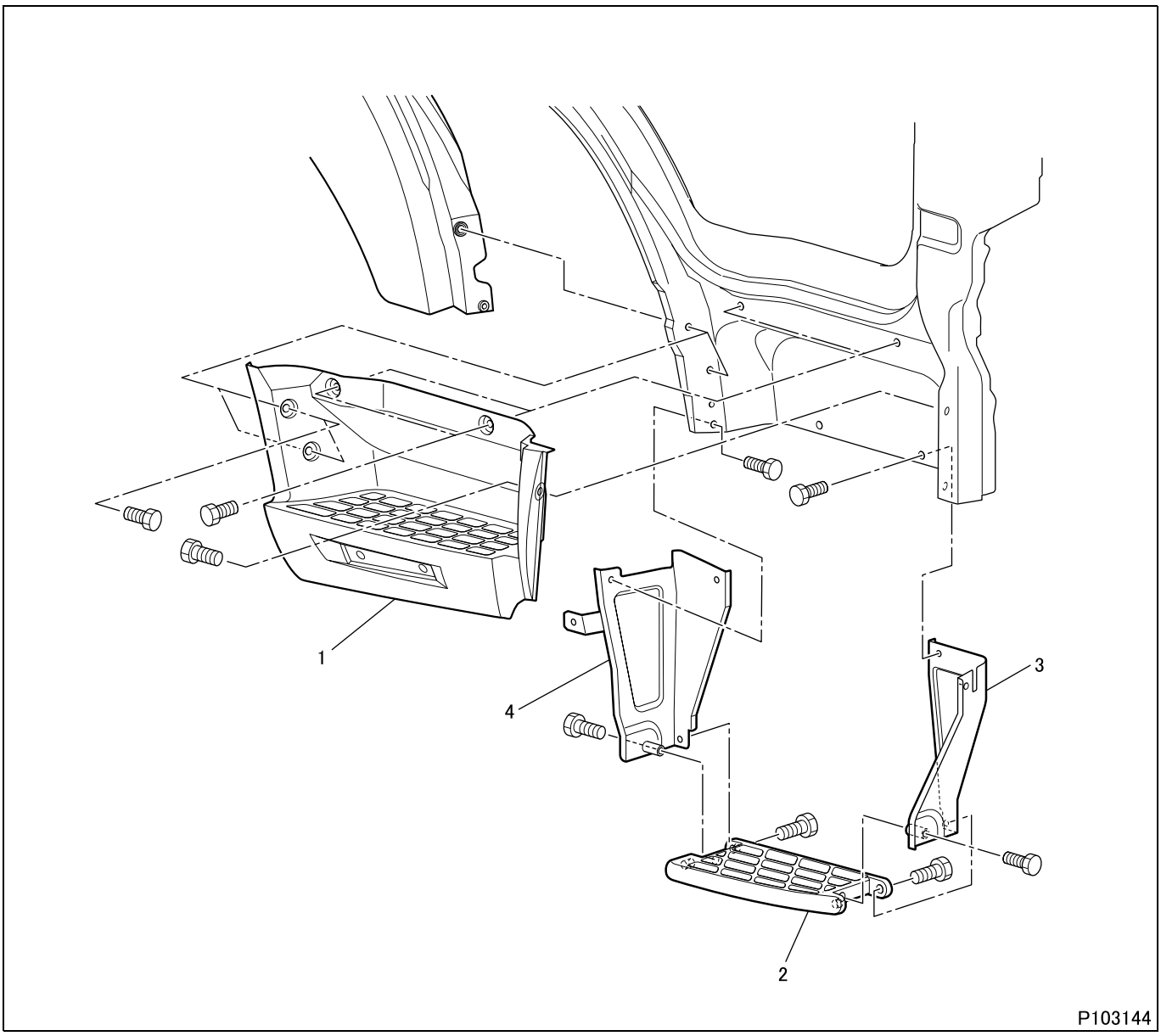

●Removal sequence

1 Step
2 No. 1 step <FG>
3 No. 1 step front bracket <FG>
4 No. 1 step rear bracket <FG>

●Installation sequence

Follow the removal sequence in reverse.

<Rear Step (crew cab)>

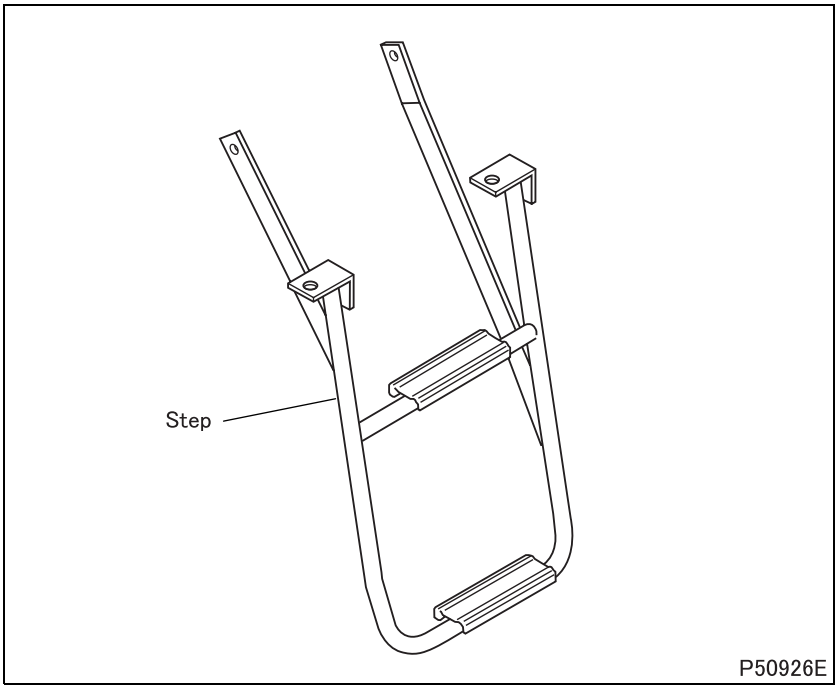

GARNISH <CREW CAB>

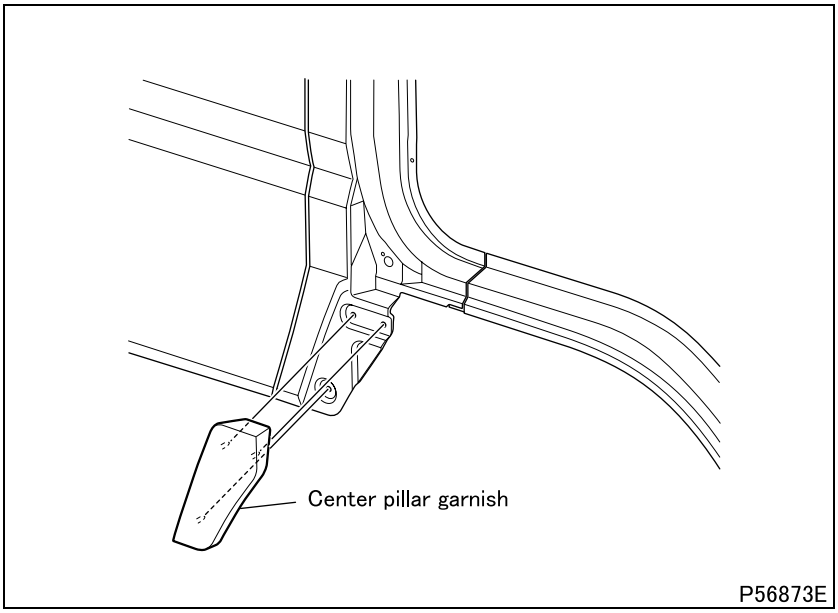

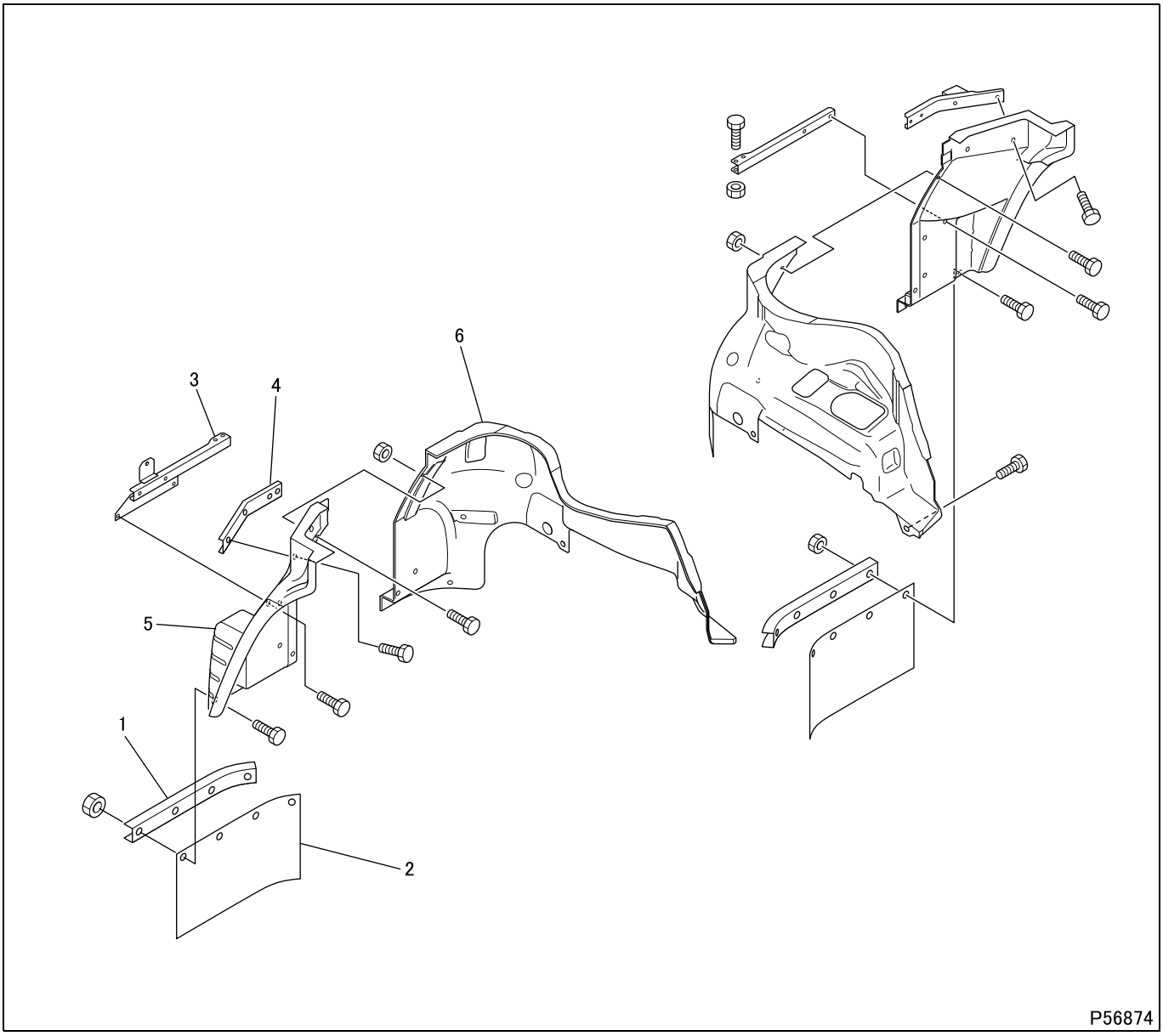

●Removal sequence

1 Apron support
2 Mud guard apron
3 Mud guard lower stay
4 Mud guard upper stay
5 Mud under guard
6 Lower shield panel

●Installation sequence

Follow the removal sequence in reverse.

WINDOW GLASS

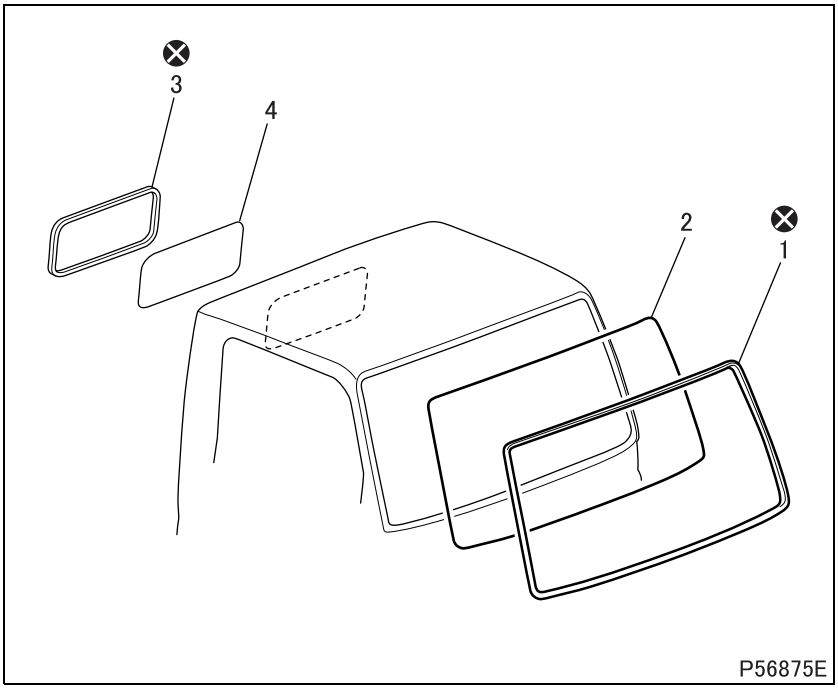

●Removal sequence

1 Windshield weatherstrip
2 Windshield glass
3 Rear window weatherstrip
4 Rear window glass

⊗: Non-reusable parts

●Installation sequence

Follow the removal sequence in reverse.

◆Removal procedure◆

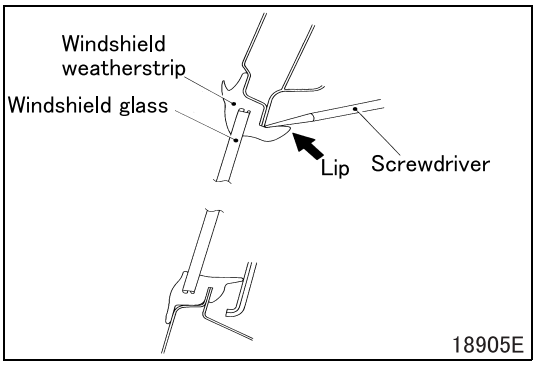

■Removal: Windshield weatherstrip and windshield glass

- While prying up the lip of the weatherstrip with the tip of a screwdriver, push the windshield glass out from inside the cab.

CAUTION ⚠

- **Be careful not to damage the painted surface of the cab. Damaged surface may form rust.**

◆Installation procedure◆

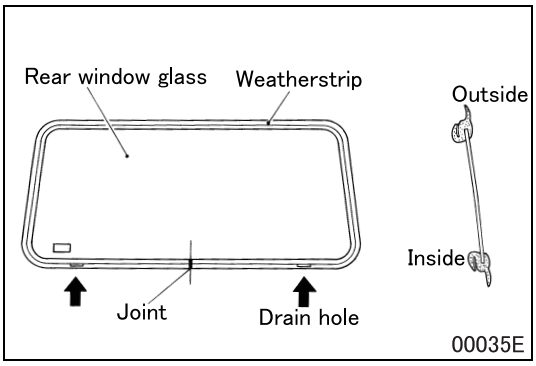

■Installation: Rear window weatherstrip and rear window glass

- Fit the rear window weatherstrip round the rear window glass so that the joint of weatherstrip comes at the bottom center of the glass.
- Except for the point mentioned above, install the rear window glass in the same manner as the windshield glass.

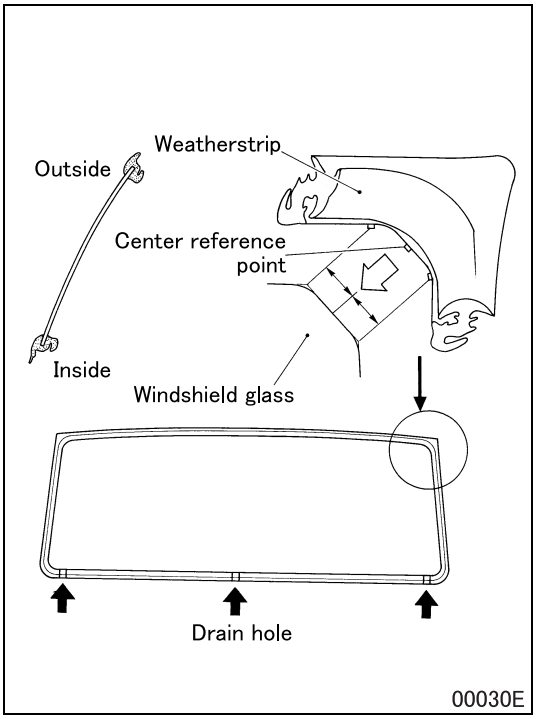

■Installation: Windshield weatherstrip and windshield glass

- Install the weatherstrip with its center reference point aligned with the center of the cut at each corner of the glass.

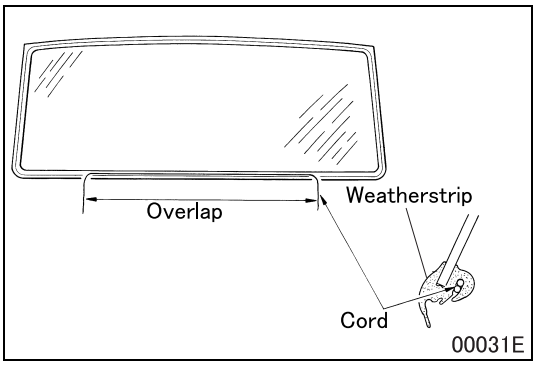

- Put a piece of strong cord in the cab flange fitting groove in the weatherstrip with its end portions overlapped.

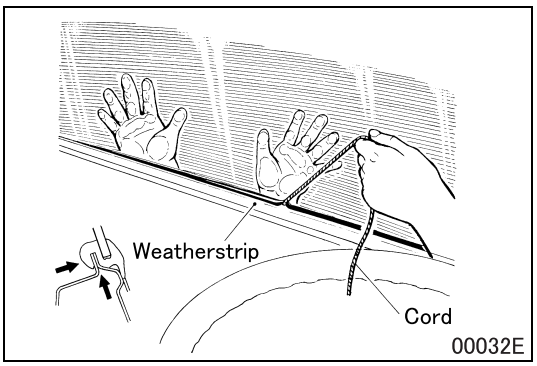

- With the glass strongly pushed from outside, pull out the cord by its ends from inside the cab to gradually fit the flange of the cab in the inner groove of the weatherstrip.

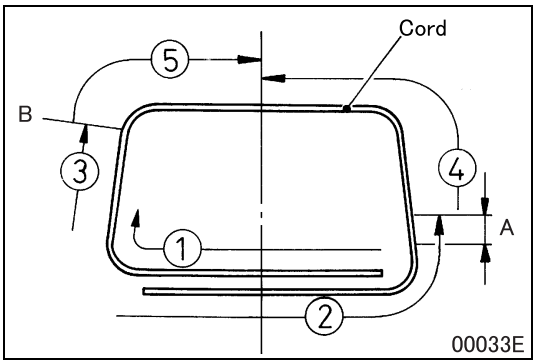

- Pull the cord in the numerical order of steps as shown. At the same time, while tapping with a rubber-headed mallet from outside the cab, settle the windshield glass in place in the weatherstrip.
  - A: Approx. 100 mm {3.9 in.} from the beginning of straight portion
  - B: Up to the end of straight portion

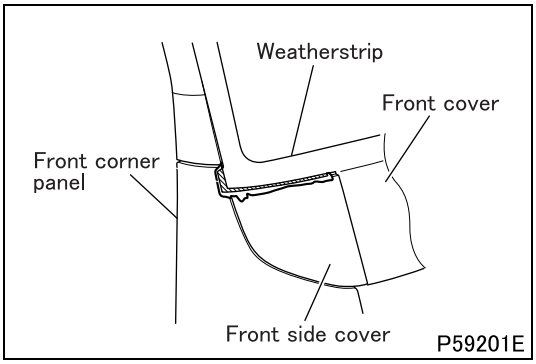

- To ensure watertightness, put the hatched part of the weatherstrip inside between the cab and the front cover, front side cover and front corner panel.

Group 52

Interior

Table of Contents

Back

Home

MITSUBISHI FUSO TRUCK OF AMERICA, Inc.

Pub.No.TWSE0805-52

INDEX

SEAT
- **<DRIVER>..... 52-2**
- **<PASSENGER>..... 52-4**
- **<REAR> 52-6**

SEAT BELT 52-8

INSTRUMENT PANEL 52-14

TRIM AND SCUFF PLATE
- **<EXCEPT CREW CAB> 52-28**
- **<CREW CAB> 52-32**

HEAD LINING
- **<EXCEPT CREW CAB> 52-34**
- **<CREW CAB> 52-36**

SEAT <DRIVER>

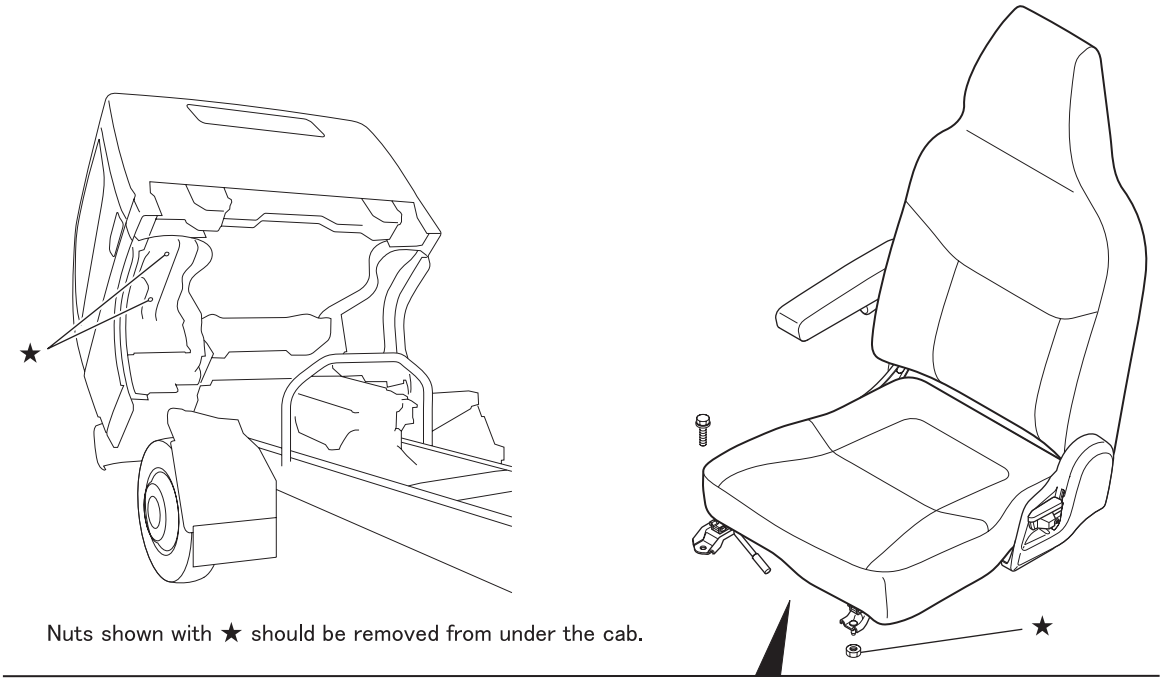

Nuts shown with ★ should be removed from under the cab.

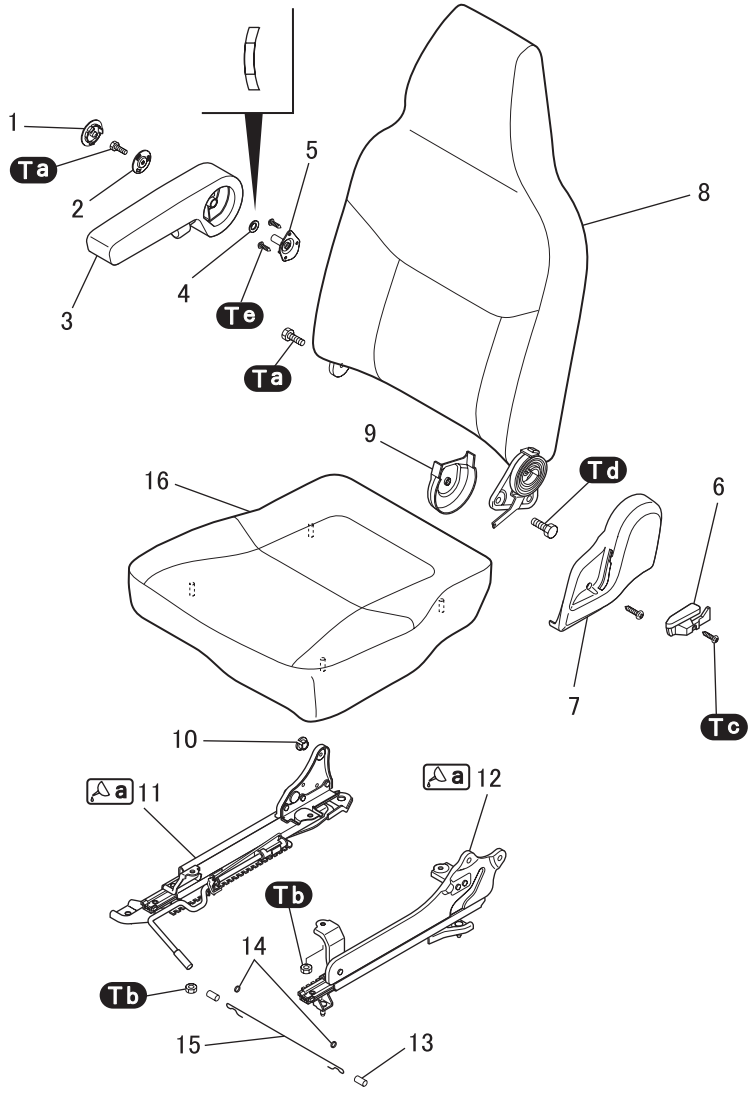

P103151E

● Removal sequence

1 Cover
2 Plate
3 Armrest
4 Washer
5 Armrest bracket
6 Knob
7 Reclining cover
8 Back cushion
9 Inner cover
10 Bushing
11 Seat adjuster (right-hand)
12 Seat adjuster (left-hand)
13 Tube
14 Clip
15 Wire
16 Seat cushion

● Installation sequence

Follow the removal sequence in reverse.

- When installing the seat adjusters, be sure to engage the locking device before fitting them onto the seat cushion.

Tightening torque (Unit: N·m {ft.lbs, kgf·m})

Mark	Parts to be tightened	Tightening torque	Remarks
Ta	Screw (plate mounting)	10 to 15 {7.4 to 11, 1.0 to 1.5}	–
	Bolt (back cushion mounting)		
Tb	Nut (seat adjuster mounting)	11 to 17 {8.11 to 12.5, 1.1 to 1.7}	–
Tc	Screw (knob mounting)	1.4 {1.0, 0.14}	–
Td	Bolt (back cushion mounting)	34.3 to 53.9 {25 to 40, 3.5 to 5.5}	–
Te	Screw (armrest bracket mounting)	4 to 6 {2.95 to 4.43, 0.4 to 0.6}	–

Lubricant and/or sealant

Mark	Points of application	Specified lubricant and/or sealant	Quantity
a	Sliding surface of seat adjuster	Chassis grease [NLGI No. 1 (Li soap)]	As required

◆Installation procedure◆

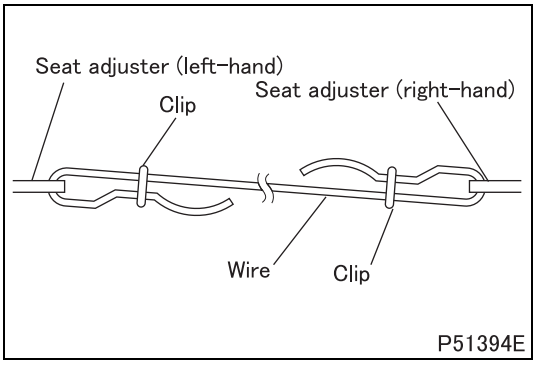

■ Installation: Wire

- Install one end of the wire onto the seat adjuster (left-hand). Then, twist the wire a half turn before fitting the other end onto the seat adjuster (right-hand).

SEAT <PASSENGER>

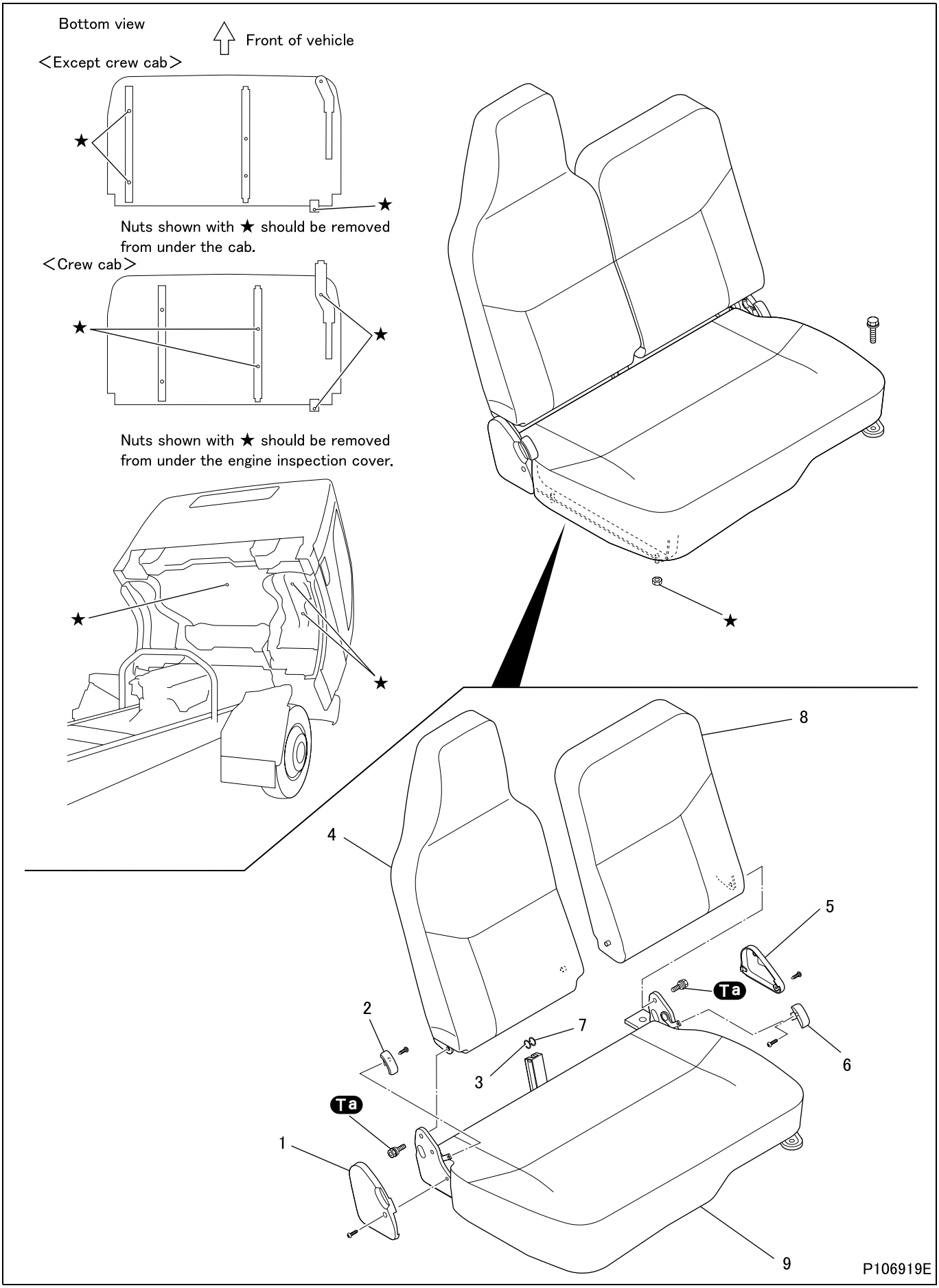

● **Removal sequence**

1 Reclining cover (right-hand)
2 Knob
3 Snap ring
4 Side back cushion
5 Reclining cover (left-hand)
6 Knob
7 Snap ring
8 Center back cushion
9 Seat cushion

● **Installation sequence**

Follow the removal sequence in reverse.

Tightening torque (Unit: N·m {ft.lbs, kgf·m})

Mark	Parts to be tightened	Tightening torque	Remarks
Ta	Bolt (back cushion mounting)	19 to 28 {14 to 21, 1.9 to 2.8}	–

◆**Removal procedure**◆

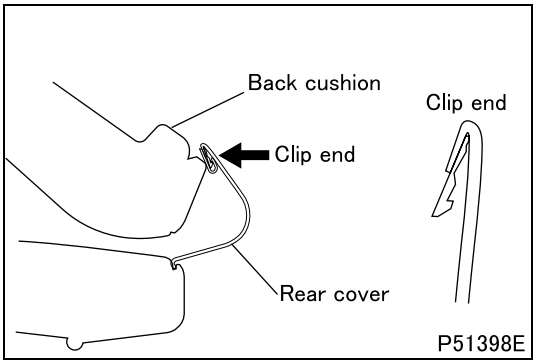

■ **Removal: Back cushions**

- With the back cushion folded forward, disengage the clip end of the rear cover.

SEAT <REAR>

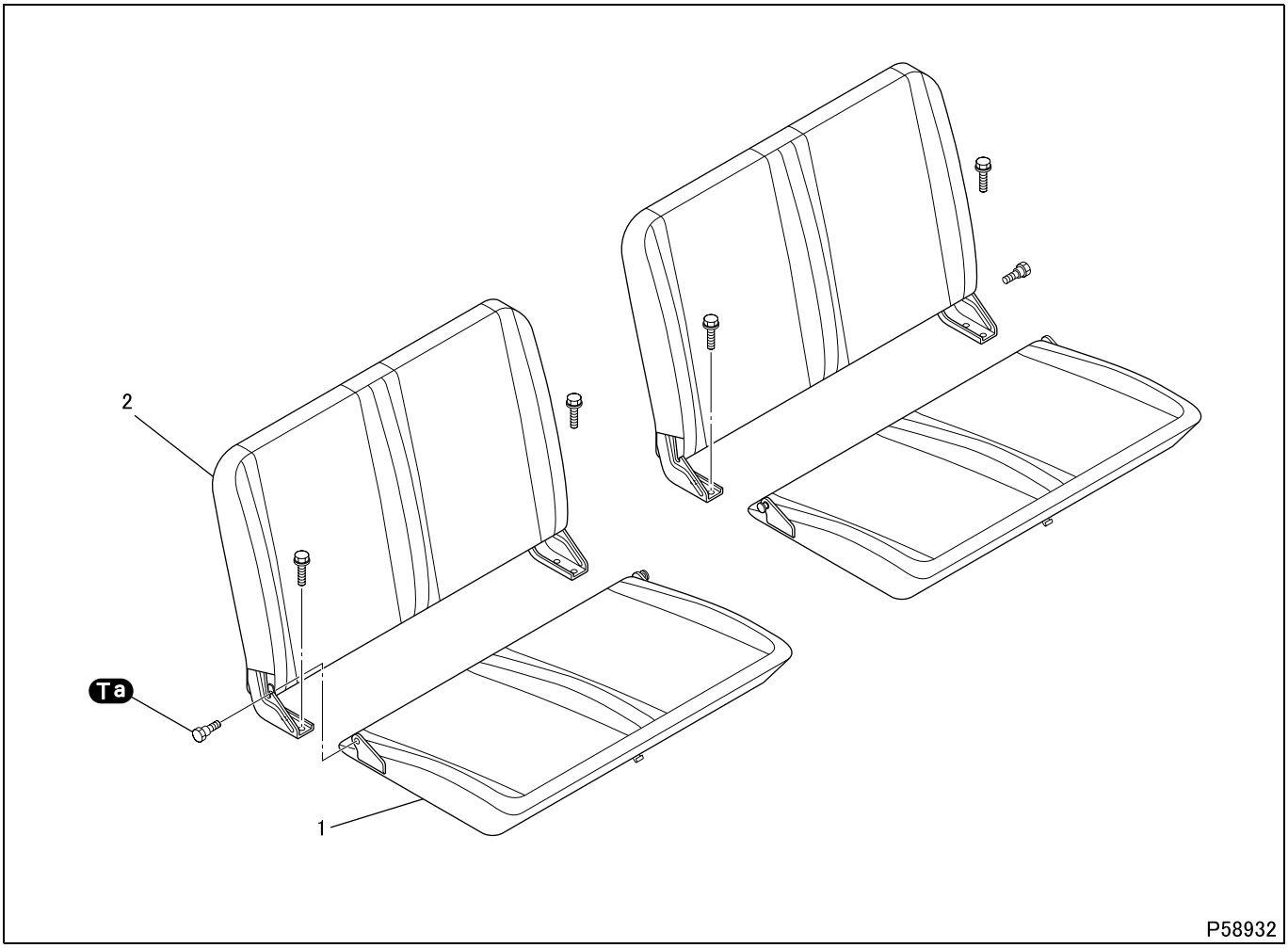

● **Removal sequence**

1 Seat cushion
2 Back cushion

● **Installation sequence**

Follow the removal sequence in reverse.

Tightening torque (Unit: N·m {ft.lbs, kgf·m})

Mark	Parts to be tightened	Tightening torque	Remarks
Ta	Bolt (seat cushion mounting)	9 to 14 {6.6 to 10, 0.9 to 1.4}	–

M E M O

<Driver Side>

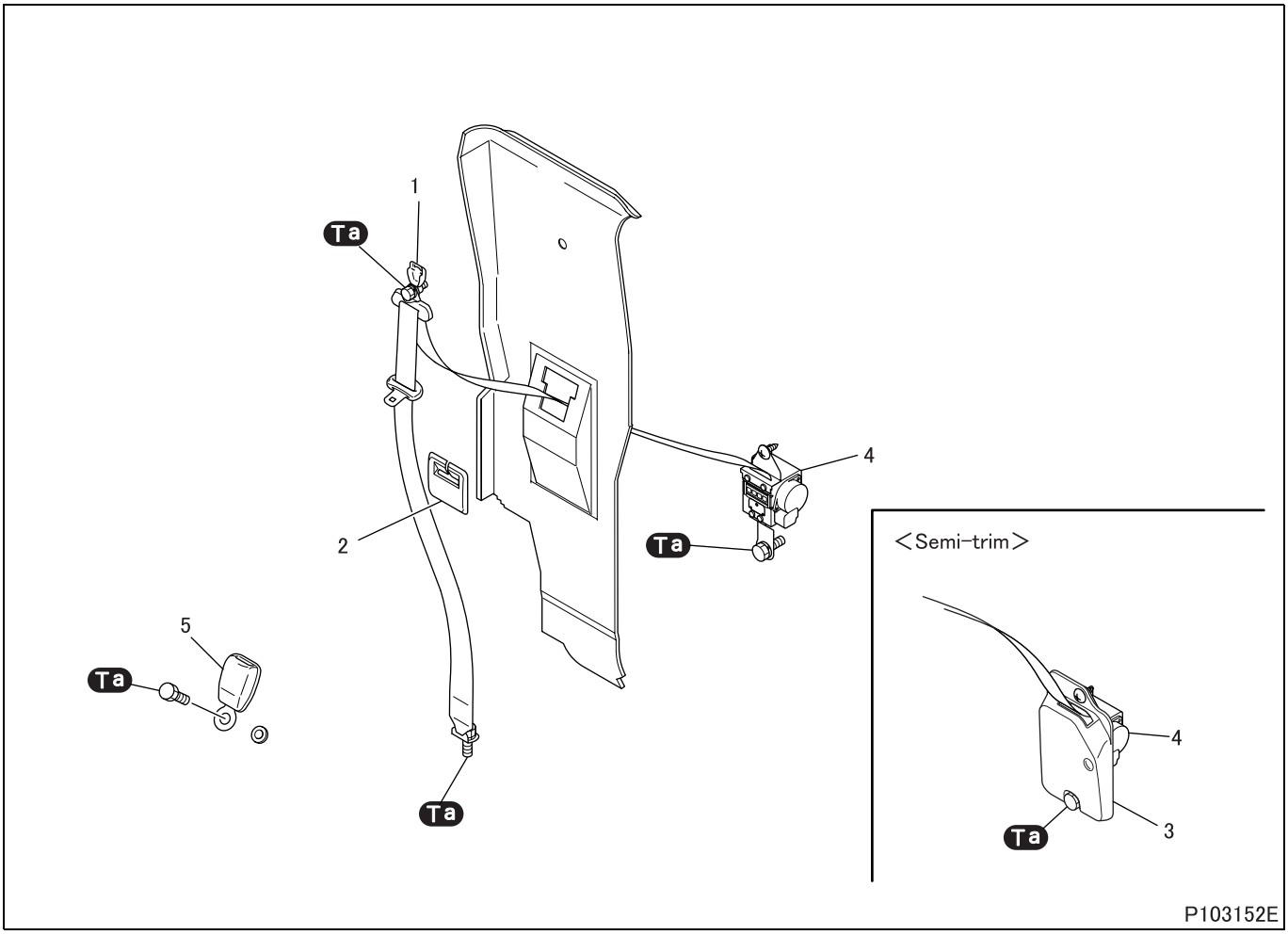

● **Removal sequence**

1 Shoulder anchor cover
2 Seat belt guide <Except crew cab>
3 Emergency locking retractor cover
4 Emergency locking retractor
5 Buckle

● **Installation sequence**

Follow the removal sequence in reverse.

CAUTION ⚠

- **Never disassemble the emergency locking retractor, or buckle.**

Tightening torque (Unit: N·m {ft.lbs, kgf·m})

Mark	Parts to be tightened	Tightening torque	Remarks
Ta	Bolt (floor anchor mounting)	34 to 54 {25 to 40, 3.5 to 5.5}	–
	Bolt (shoulder anchor mounting)		
	Bolt (emergency locking retractor mounting)		
	Nut (buckle mounting)		

◆Removal procedure◆

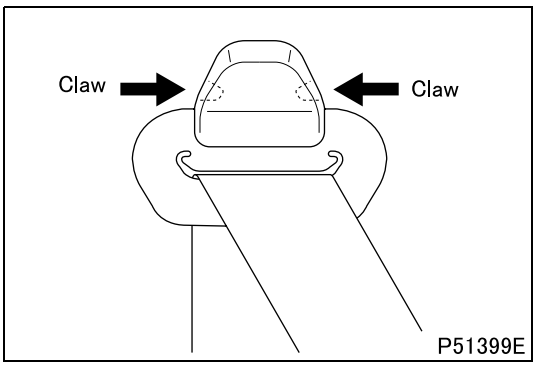

■ **Removal: Shoulder anchor cover**

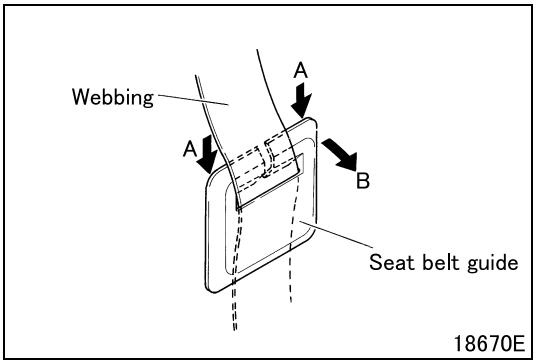

■ **Removal: Seat belt guide**

- To detach the seat belt guide, pull the top of the guide towards you in the direction of B while holding it down in the direction of A.

SEAT BELT

<Passenger Side>

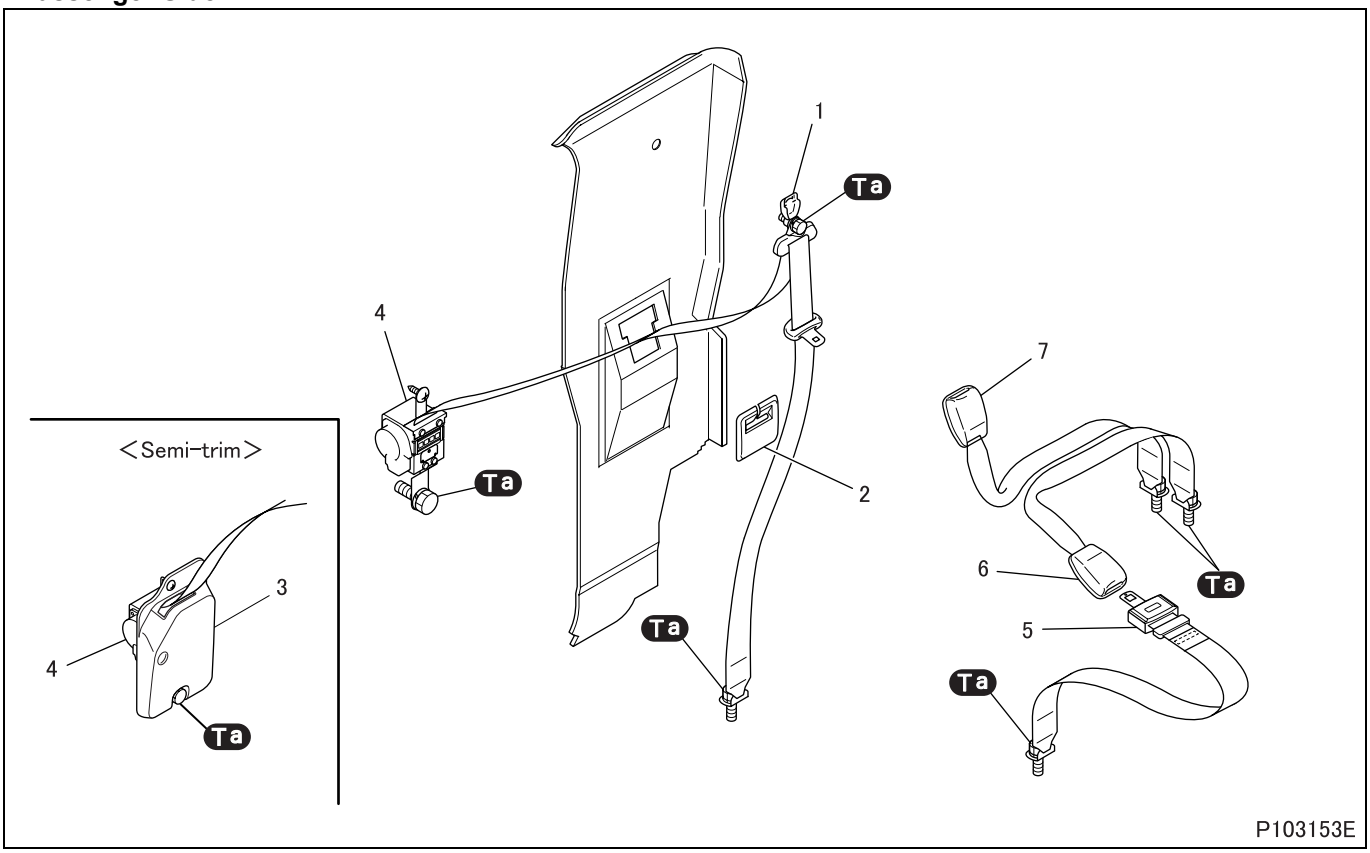

● Removal sequence

1 Shoulder anchor cover
2 Seat belt guide <Except crew cab>
3 Emergency locking retractor cover
4 Emergency locking retractor
5 Tongue
6 Buckle
7 Buckle

● Installation sequence

Follow the removal sequence in reverse.

CAUTION ⚠

- **Never disassemble the emergency locking retractor, or buckle.**

Tightening torque (Unit: N·m {ft.lbs, kgf·m})

Mark	Parts to be tightened	Tightening torque	Remarks
Ta	Bolt (floor anchor mounting)	34 to 54 {25 to 40, 3.5 to 5.5}	–
	Bolt (shoulder anchor mounting)		
	Bolt (emergency locking retractor mounting)		
	Bolt (buckle mounting)		
	Bolt (tongue mounting)		

◆Removal procedure◆

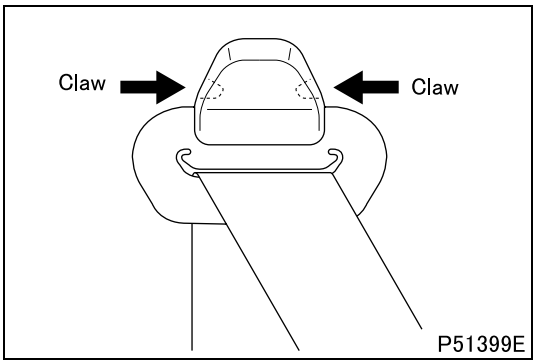

■ **Removal: Shoulder anchor cover**

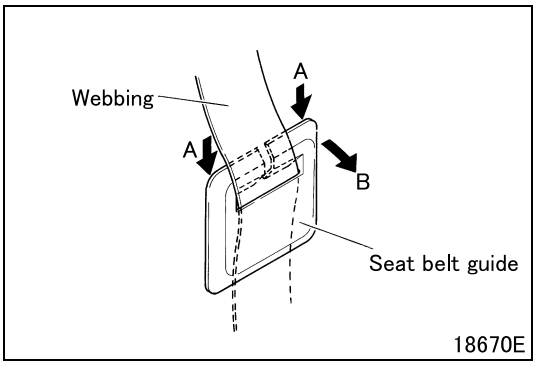

■ **Removal: Seat belt guide**

- To detach the seat belt guide, pull the top of the guide towards you in the direction of B while holding it down in the direction of A.

<Rear>

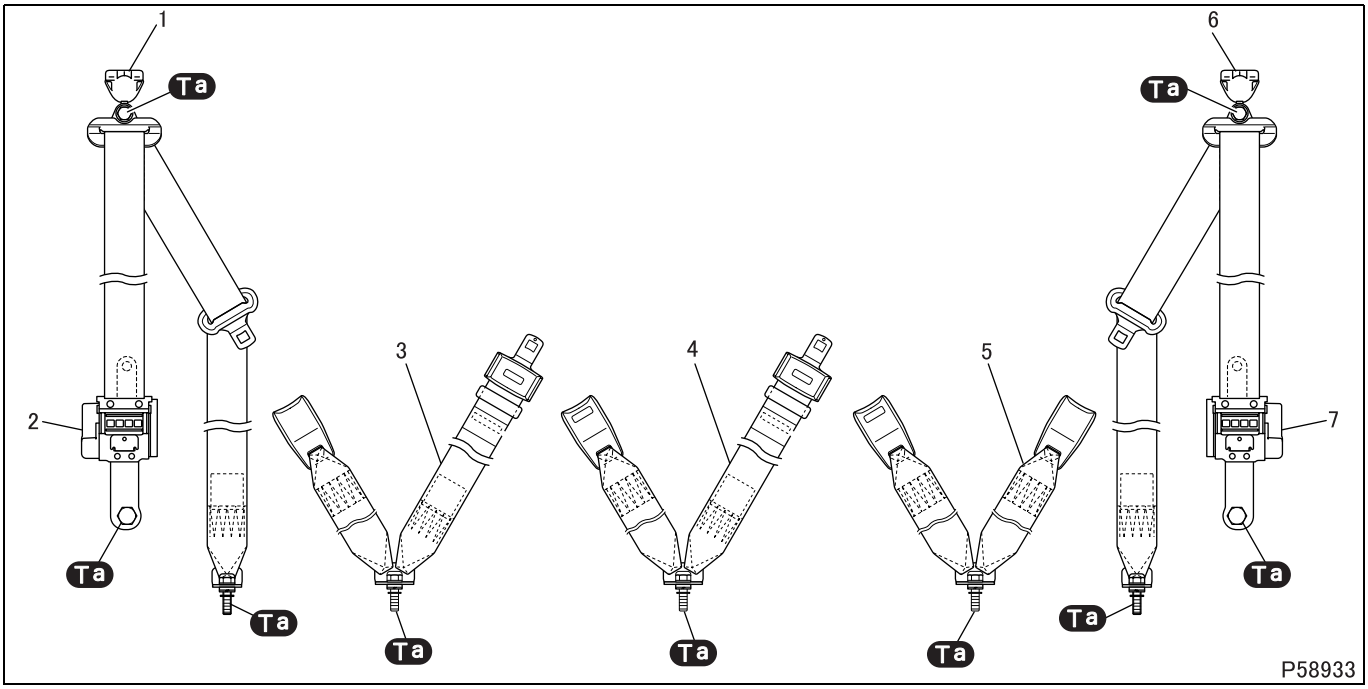

● **Removal sequence**

1 Shoulder anchor cover
2 Emergency locking retractor (right-hand)
3 Rear seat belt (right-hand)
4 Rear seat belt (center)
5 Rear seat belt (left-hand)
6 Shoulder anchor cover
7 Emergency locking retractor (left-hand)

● **Installation sequence**

Follow the removal sequence in reverse.

CAUTION ⚠

- **Never disassemble the emergency locking retractor.**

Tightening torque (Unit: N·m {ft.lbs, kgf·m})

Mark	Parts to be tightened	Tightening torque	Remarks
Ta	Bolt (floor anchor mounting)	34 to 54 {25 to 40, 3.5 to 5.5}	–
	Bolt (shoulder anchor mounting)		
	Bolt (emergency locking retractor mounting)		
	Bolt (rear seat belt mounting)		

◆**Removal procedure**◆

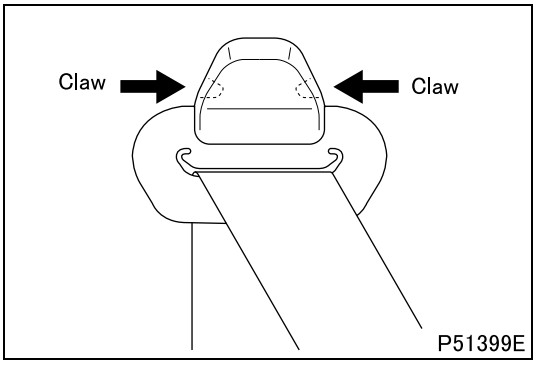

■ **Removal: Shoulder anchor cover**

M E M O

INSTRUMENT PANEL

Lower Panel

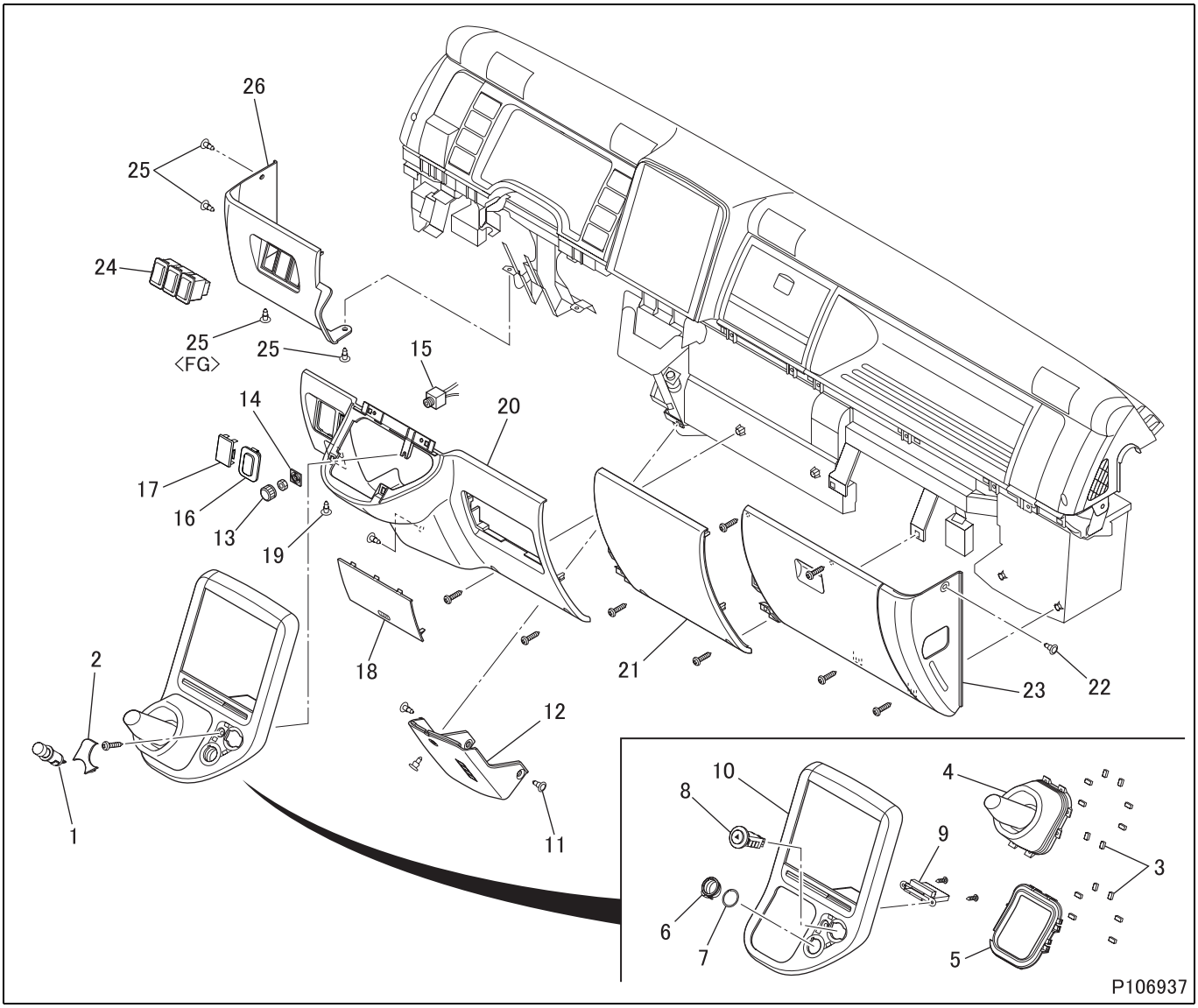

● Removal sequence

1 Cigarette lighter
2 Panel cover
3 Push-on nut (× 8 <M/T>, × 6 <A/T>)
4 Shift lever boots <M/T>
5 A/T cover <A/T>
6 Cigarette lighter ring
7 Cigarette lighter protector
8 Hazard switch
9 Card holder
10 Upper center panel
11 Clip
12 Gear shift lever cover
13 Knob
14 Plate
15 Idle speed adjuster
16 Plug
17 Plug
18 Lid (for inspection of fuses)
19 Clip
20 Lower center panel
21 Passenger panel B
22 Clip
23 Passenger panel A
24 Switch or plug
25 Clip (× 3 <FE>, × 4 <FG>)
26 Driver panel

M/T: Manual transmission
A/T: Automatic transmission

● Installation sequence

Follow the removal sequence in reverse.

◆Removal procedure◆

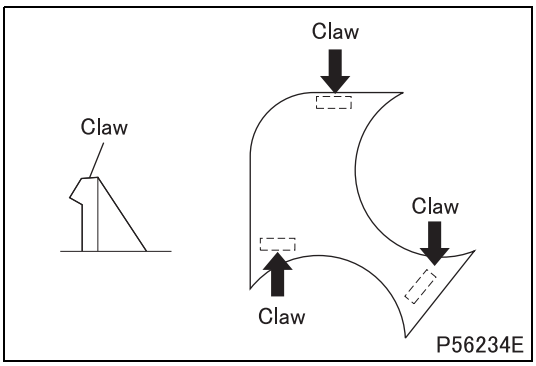

■ **Removal: Panel cover**

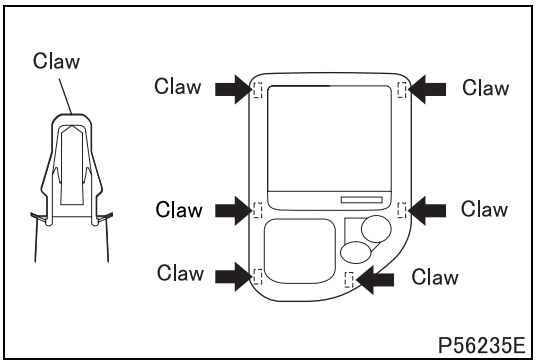

■ **Removal: Upper center panel**

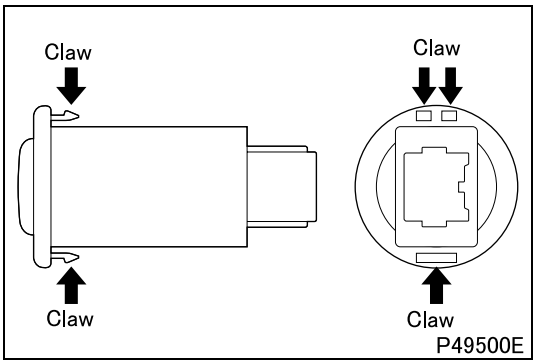

■ **Removal: Hazard switch**

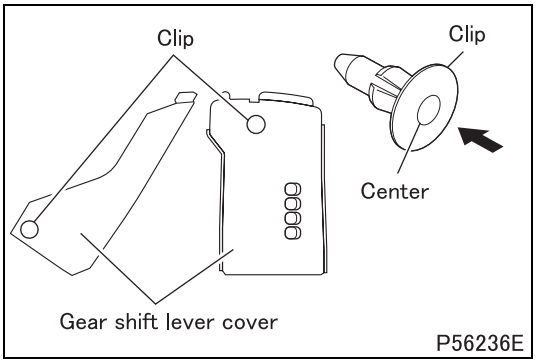

■ **Removal: Gear shift lever cover**

- Push the clips (× 3) in the center to disengage them from the gear shift lever cover.

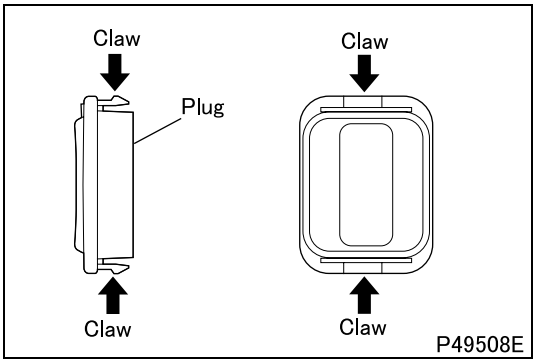

■ **Removal: Plug**

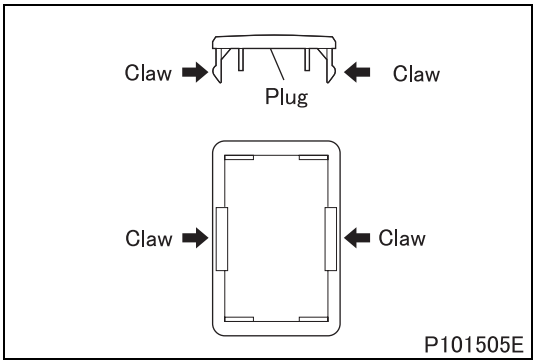

■ **Removal: Plug**

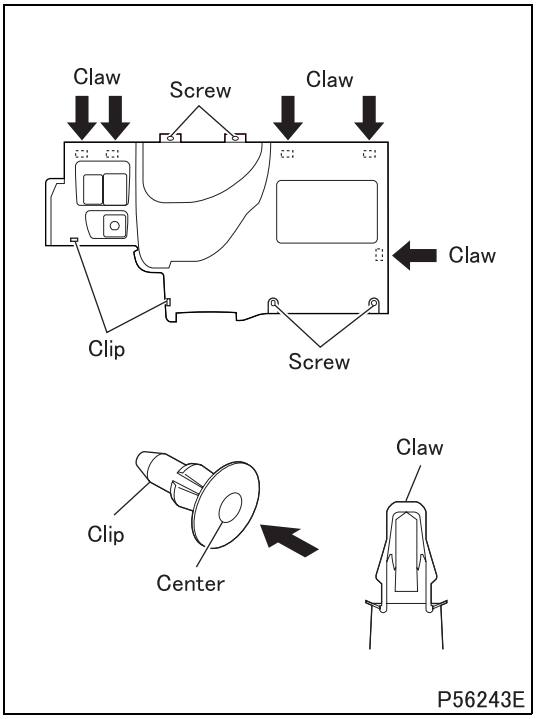

■ **Removal: Lower center panel**

- Remove the screws (× 4) from the lower center panel.
- Push the clips (× 2) in the center to disengage them from the lower center panel.

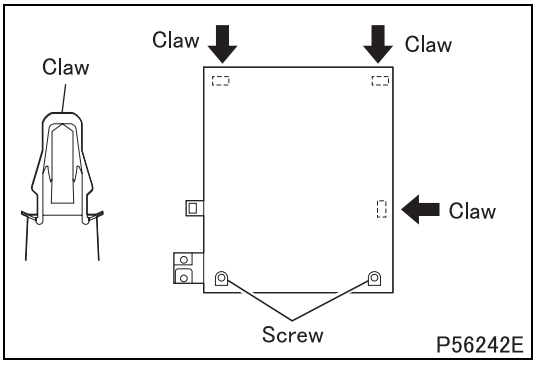

■ **Removal: Passenger panel B**

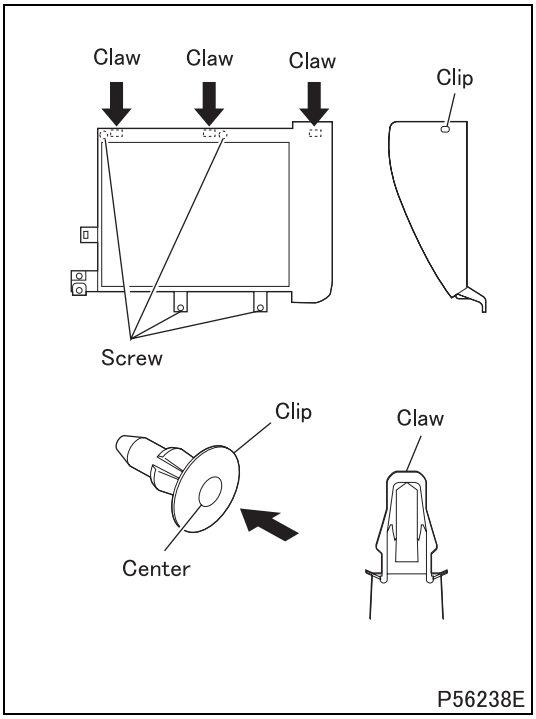

■ **Removal: Passenger panel A**

- Remove the screws (× 4) from the passenger panel.
- Push the clip (× 1) in the center to disengage it from the passenger panel.

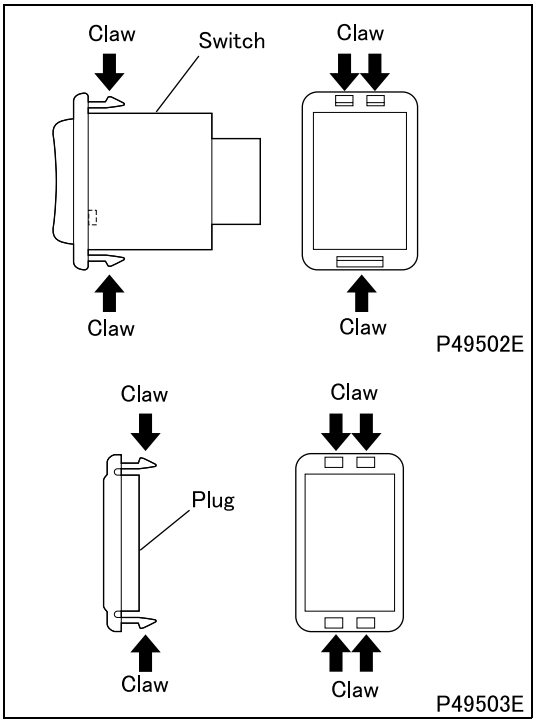

■ **Removal: Switch or plug**

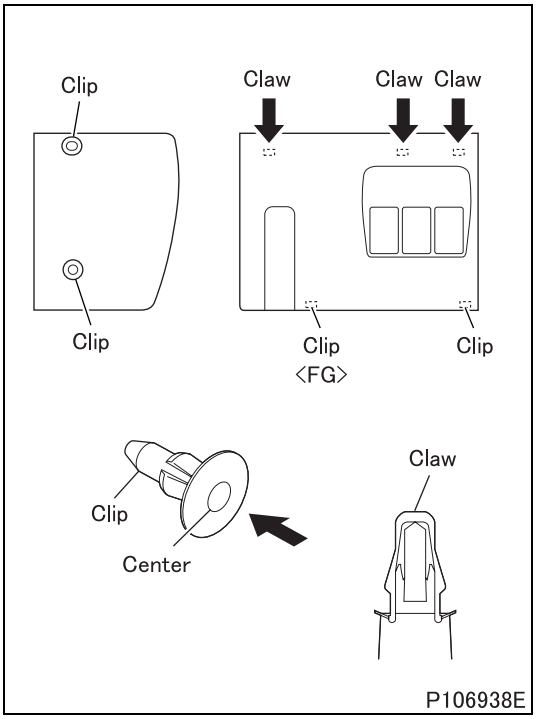

■ **Removal: Driver panel**

- Push the clips (× 3 <FE>, × 4 <FG>) in the center to disengage them from the driver panel.

◆Installation procedure◆

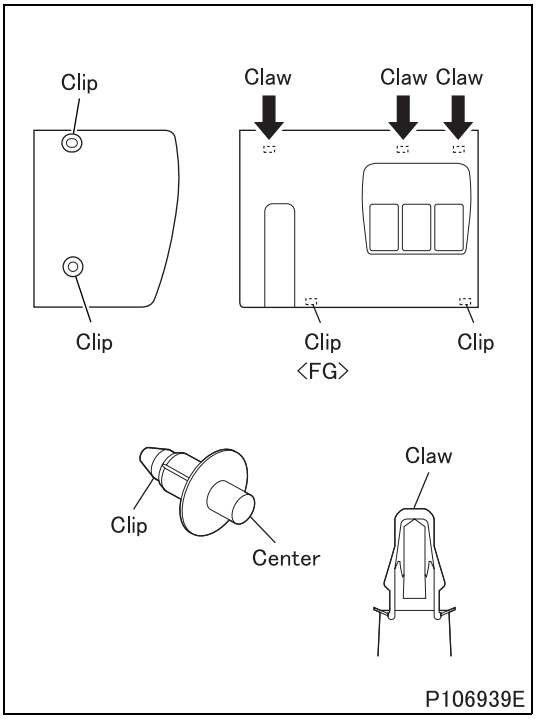

■ **Installation: Driver panel**

- Insert the clips (× 3 <FE>, × 4 <FG>) at the illustrated locations and push them in the center to engage into the driver panel.

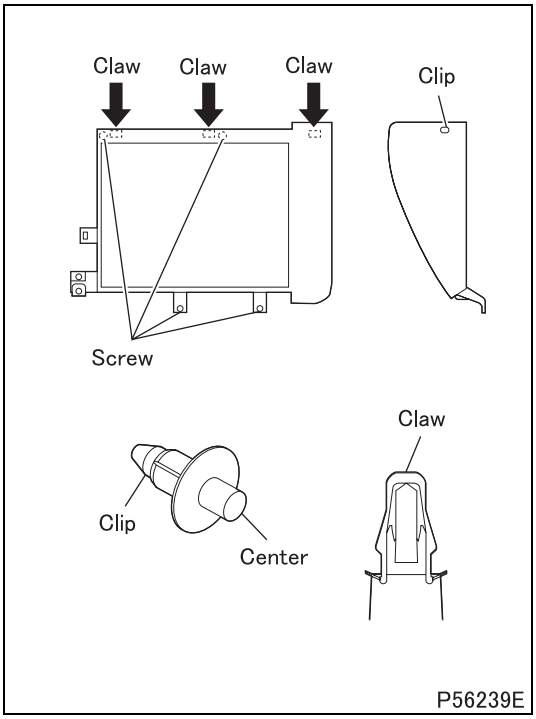

■ **Installation: Passenger panel A**

- Insert the clip (× 1) at the illustrated location and push it in the center to engage into the passenger panel.
- Install the screws (× 4) to the passenger panel.

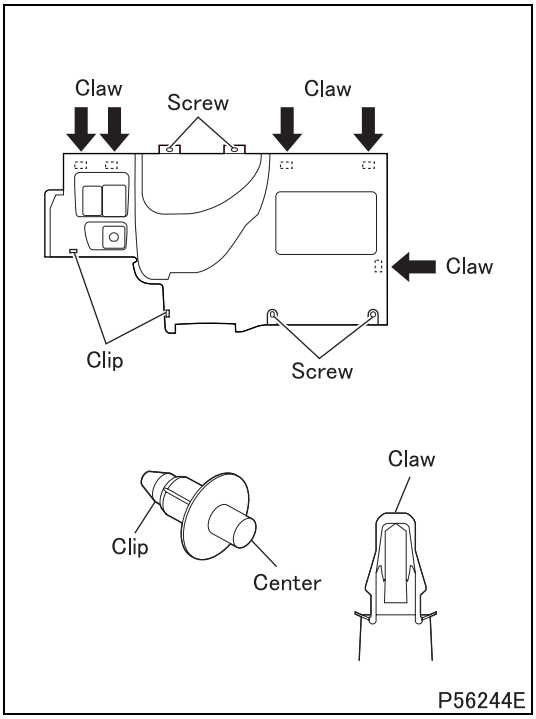

■ **Installation: Lower center panel**

- Insert the clips (× 2) at the illustrated locations and push them in the center to engage into the lower center panel.
- Install the screws (× 4) to the lower center panel.

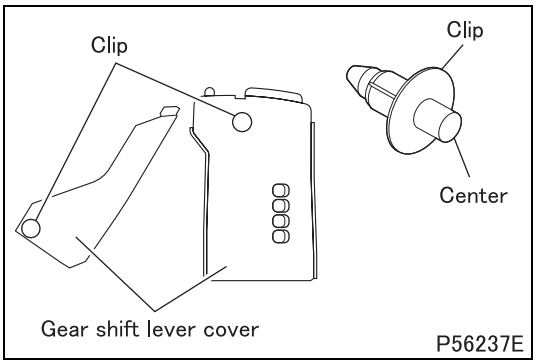

■ **Installation: Gear shift lever cover**

- Insert the clips (× 3) at the illustrated locations and push them in the center to engage into the gear shift lever cover.

INSTRUMENT PANEL

Driver Upper Panel

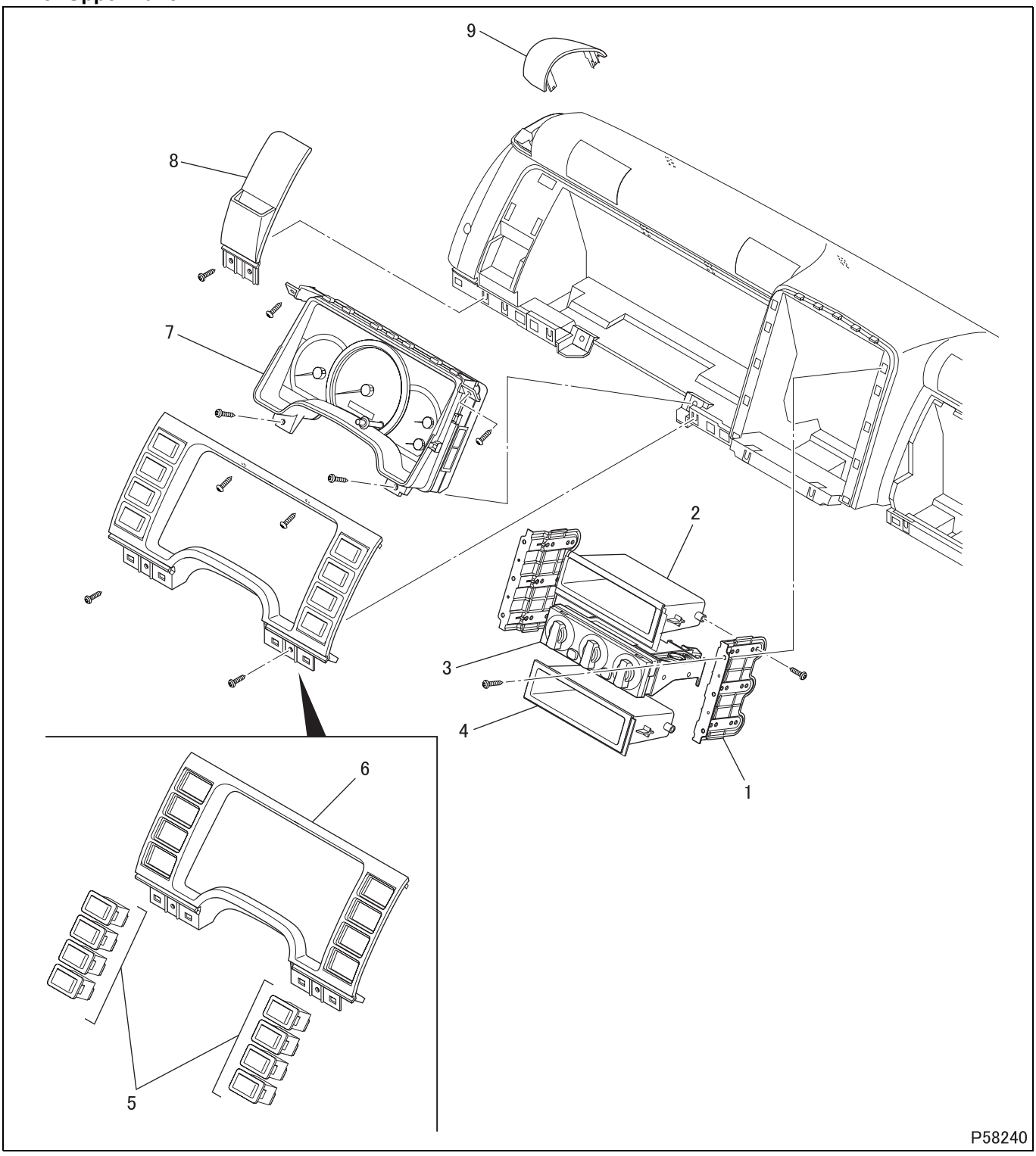

● **Removal sequence**

1 Radio bracket
2 Box
3 Heater control unit
4 Box
5 Switch or plug
6 Meter bezel
7 Meter cluster
8 Lid (accessories box)
9 Lid (brake fluid tank)

● **Installation sequence**

Follow the removal sequence in reverse.

◆Work before removal◆

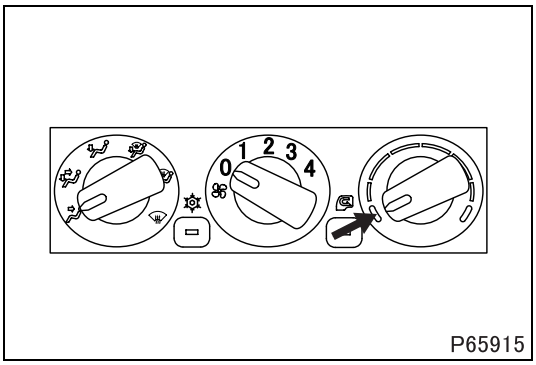

■ **Removal: Control cables**

- Turn the temperature control knob of the heater controls to the MAX-COOL position.

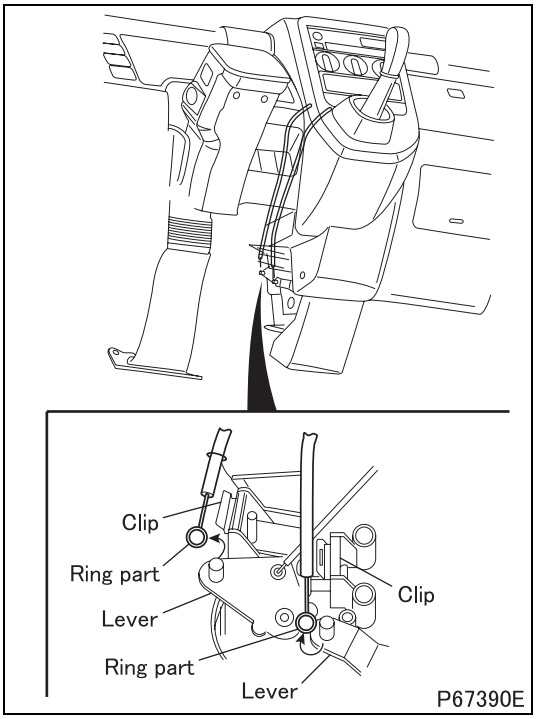

- Before disconnecting the cables from the levers, put pairing marks on each cable and its lever.
- Disconnect the control cables from the heater unit.

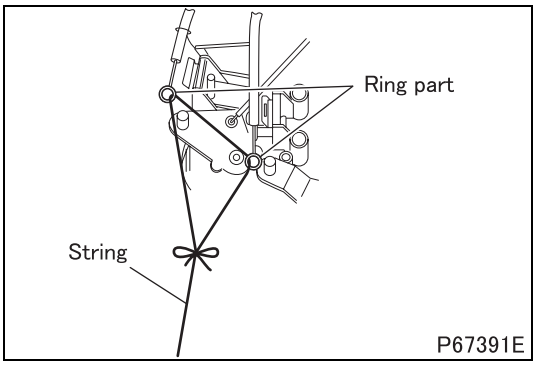

- In order that the control cables can be pulled back at the time of installation, attach string to the ring parts of the cables as shown in the illustration.

◆Removal procedure◆

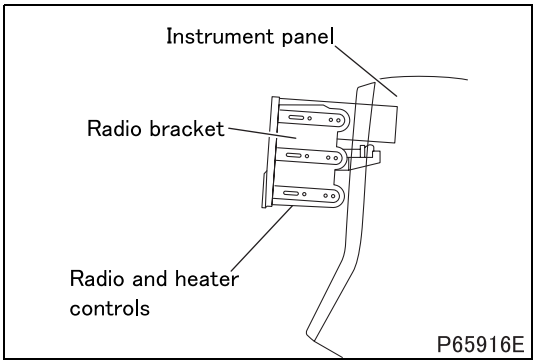

■ **Removal: Radio bracket**

- Pull out the radio bracket for radio and heater controls until it completely comes out of the instrument panel as shown in the illustration.

CAUTION ⚠

- **Do not pull the bracket with a strong force. Pulling it strongly could give damage to the heater controls and control cables.**

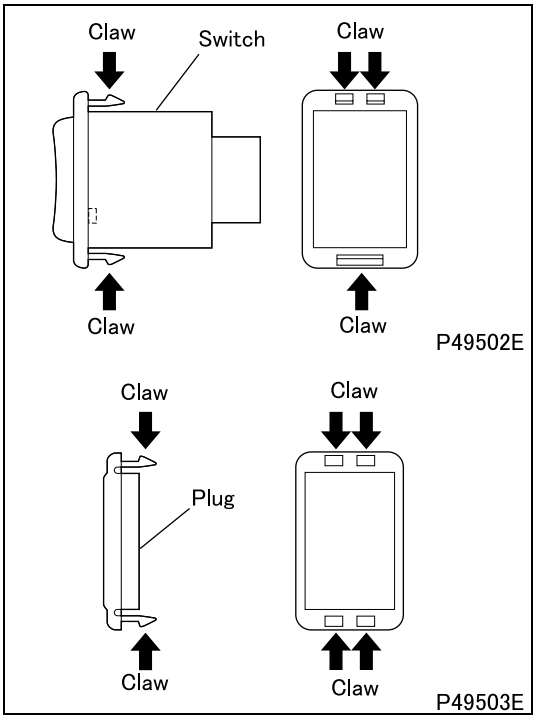

■ **Removal: Switch or plug**

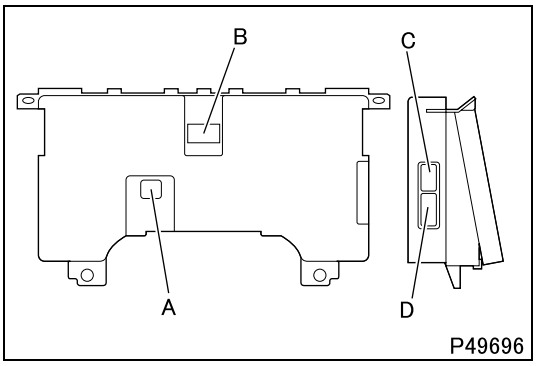

■ **Removal: Meter cluster**

- Disconnect the cab harness connectors A to D from the meter cluster and remove the meter cluster from the instrument panel. (The illustration shows the rear face of the meter cluster.)

Connector poles

A	B	C	D
10	20	18	22

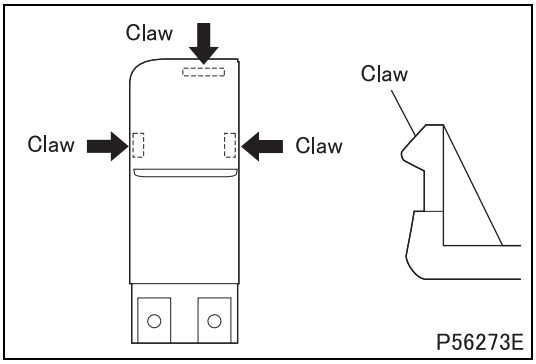

■ **Removal: Lid (accessories box)**

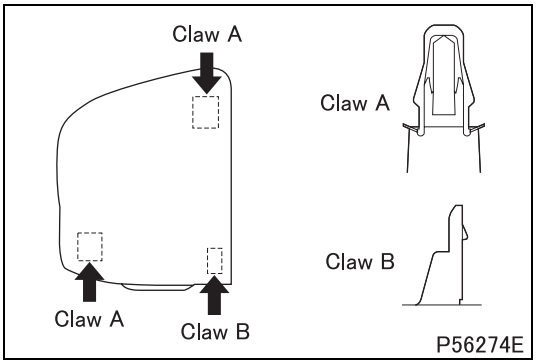

■ **Removal: Lid (brake fluid tank)**

◆Work after installation◆

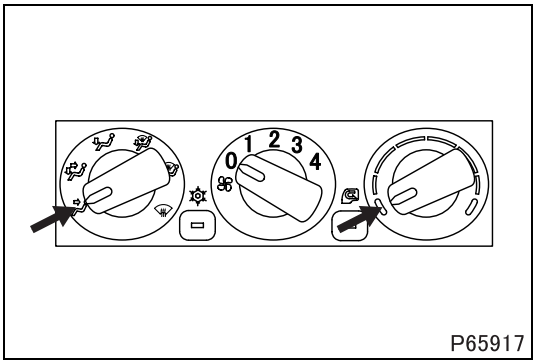

■**Installation: Control cables**

- Of the heater controls, turn the temperature control knob to the MAX-COOL position and also turn the mode selector knob to the face position.

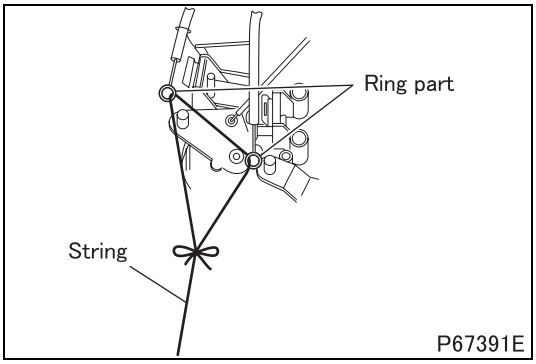

- Pull out the control cables using the string that was attached to them at the time of removal.
- According to the pairing marks, reconnect the cables to the heater unit levers correctly. (See Gr55.)

Passenger Upper Panel

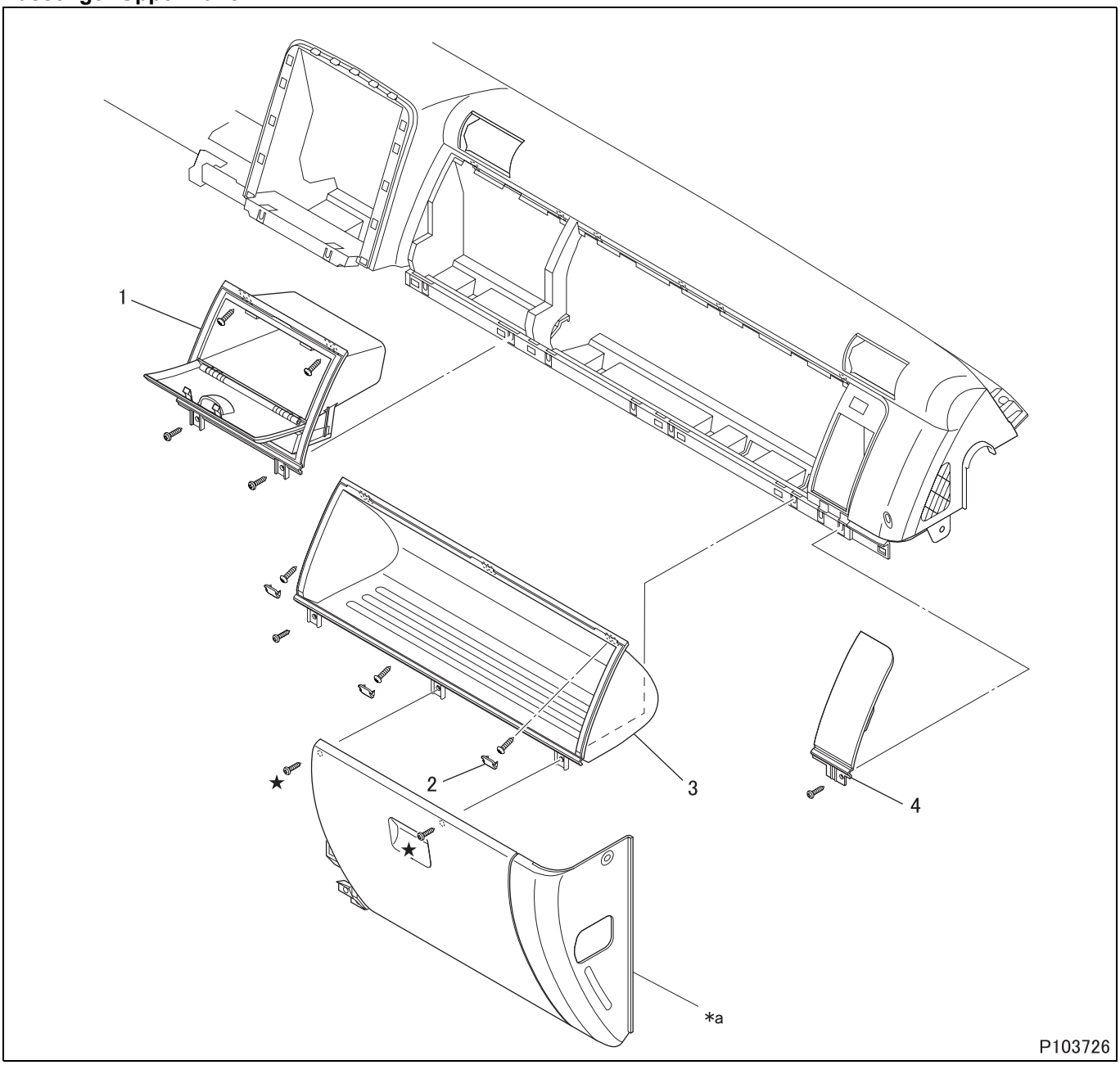

●Removal sequence

1 Glove box
2 Plug
3 Parcel tray
4 Lid

***a**: Passenger panel A

- ★ marked: Fastened together with passenger panel A

● Installation sequence

Follow the removal sequence in reverse.

◆Removal procedure◆

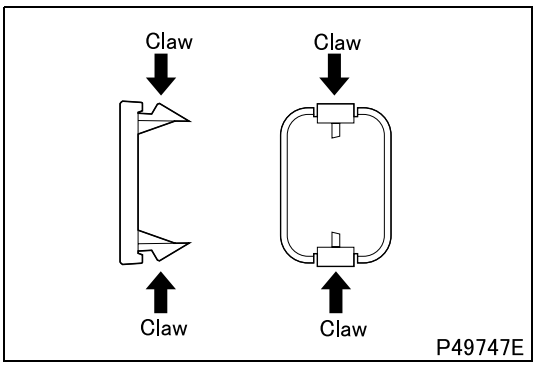

■ Removal: Plug

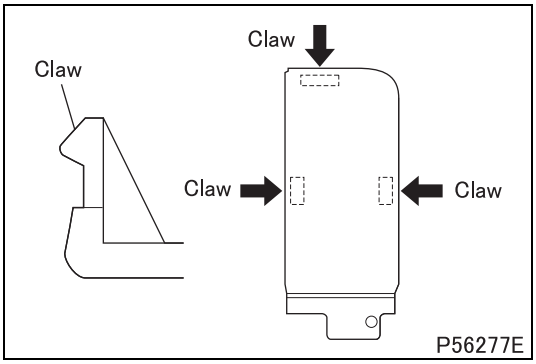

■ Removal: Lid

INSTRUMENT PANEL

Instrument Panel

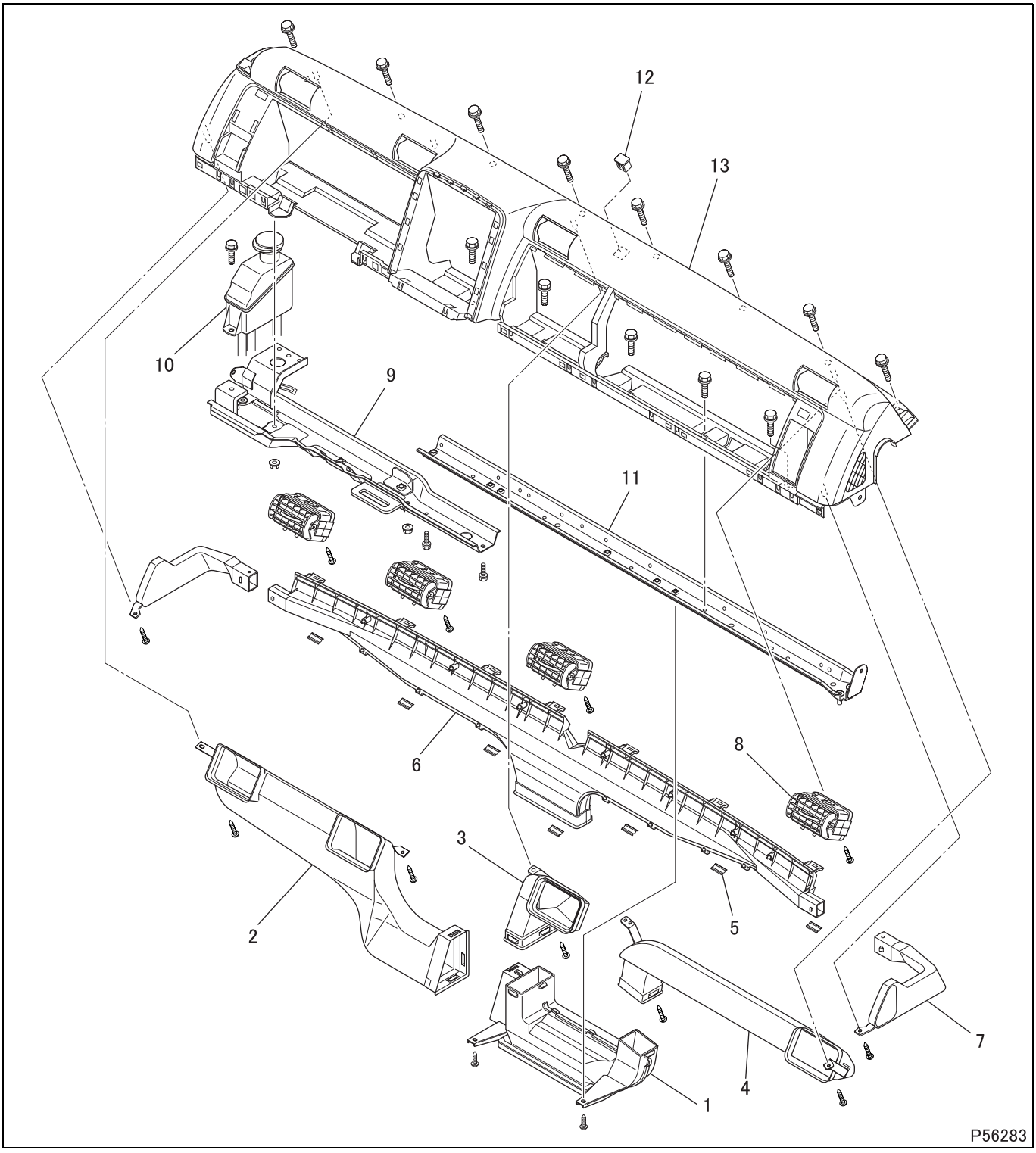

● **Removal sequence**

1 Center duct
2 Driver face duct
3 Center face duct
4 Passenger face duct
5 Clip (× 7)
6 Front defroster duct
7 Side defroster duct
8 Air outlet grille
9 Driver instrument panel frame
10 Brake fluid tank
11 Passenger instrument panel frame
12 Plug
13 Instrument panel

● Installation sequence

Follow the removal sequence in reverse.

◆Removal procedure◆

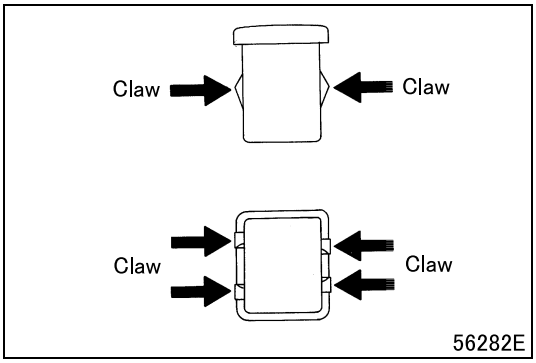

■ **Removal: Plug**

◆Installation procedure◆

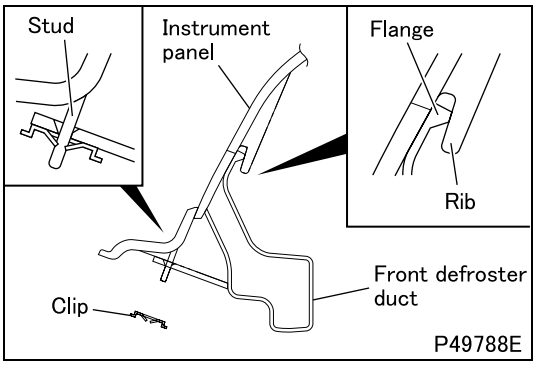

■ **Installation: Front defroster duct**

- Insert the front defroster duct flanges into the instrument panel ribs.
- Insert the instrument panel studs into the front defroster duct holes and clip them together.

TRIM AND SCUFF PLATE <EXCEPT CREW CAB>

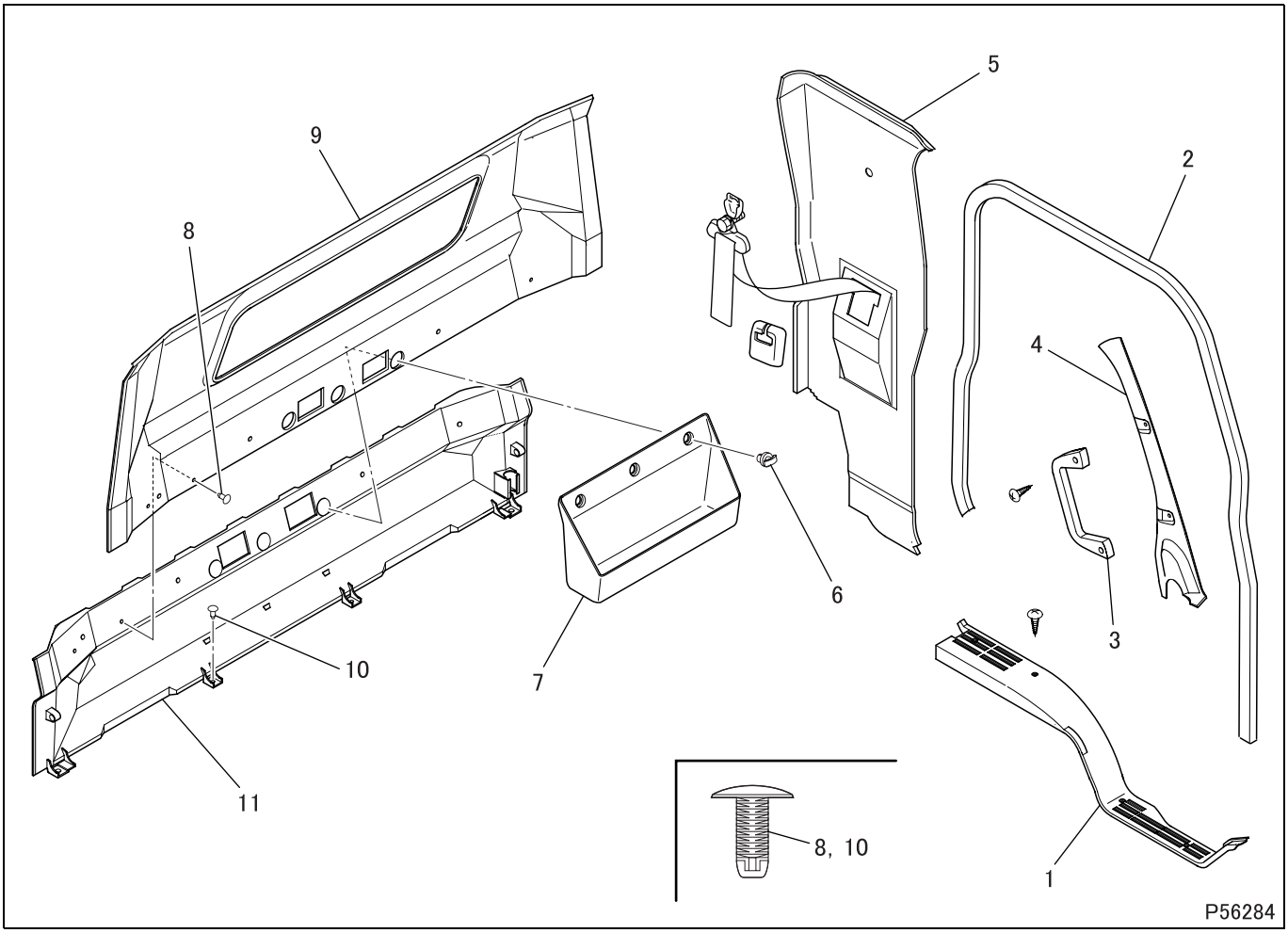

● **Removal sequence**

1 Scuff plate
2 Weatherstrip
3 Grip
4 Front pillar trim
5 Rear pillar trim
6 Hook (× 3)
7 Back panel tray
8 Clip
9 Upper rear trim
10 Clip
11 Lower rear trim

● **Installation sequence**

Follow the removal sequence in reverse.

◆**Removal procedure**◆

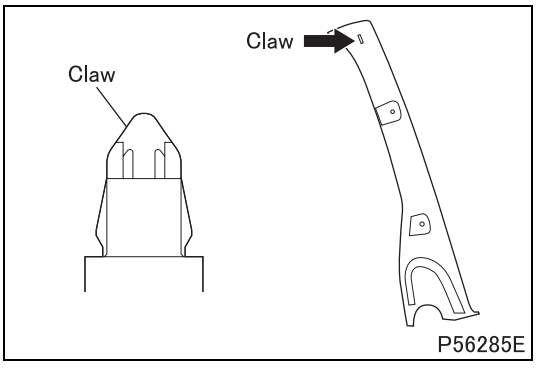

■ **Removal: Front pillar trim**

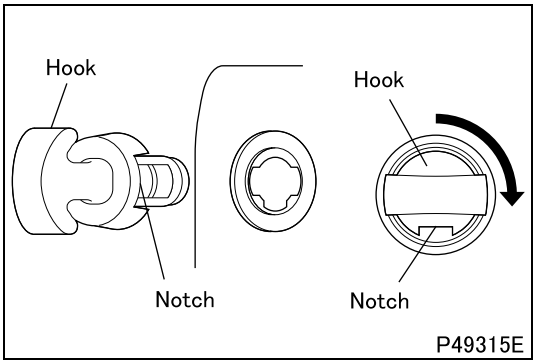

■ **Removal: Hook**

- Turn the hook 90° to disengage it.

◆Installation procedure◆

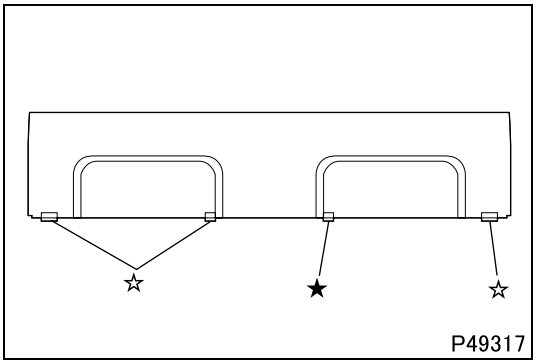

■ **Installation: Lower rear trim**

- Locate the lower rear trim correctly in position by installing a clip into the hole ★.
- Install 3 clips into the holes ☆ to completely fix the lower rear trim in position.

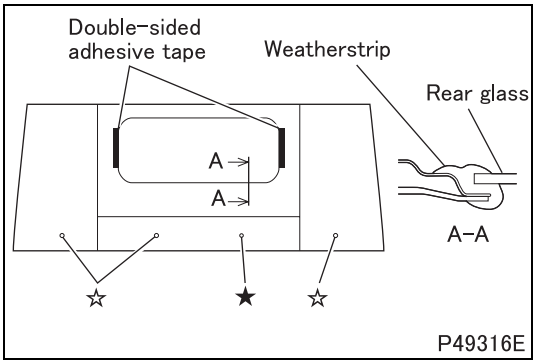

■ **Installation: Upper rear trim**

- Stick double-sided adhesive tapes onto the upper rear trim along the strips illustrated.
- Locate the upper rear trim correctly in position by installing a clip into the hole ★.
- Remove the backing strips from the double-sided adhesive tapes. Press the trim firmly on where the adhesive tapes are applied on the back. Then, install 3 clips at the places ☆.
- Install the rear glass by inserting the rear glass weatherstrip over the upper rear trim.

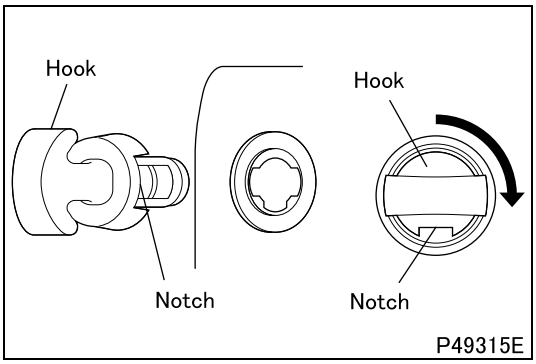

■ **Installation: Hook**

- With the notch facing in the illustrated direction, insert the hook into the lower rear trim.
- To engage the hook, turn it 90° until the notch faces downwards.

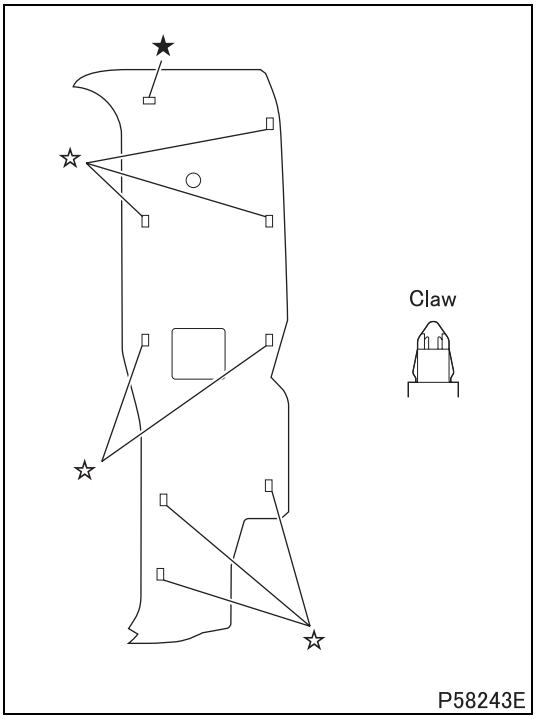

■ **Installation: Rear pillar trim**

- Locate the rear pillar trim correctly onto the cab by engaging the claw ★.
- Engage the claws ☆ (× 8) onto the cab, from the front to the rear.

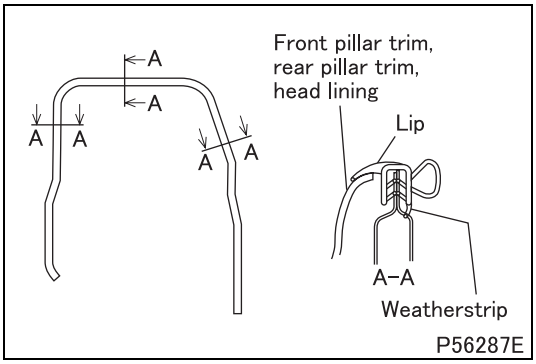

■ **Installation: Weatherstrip**

- Install the weatherstrip in such a manner that the lip of the strip holds down the front pillar trim, rear pillar trim, and head lining.

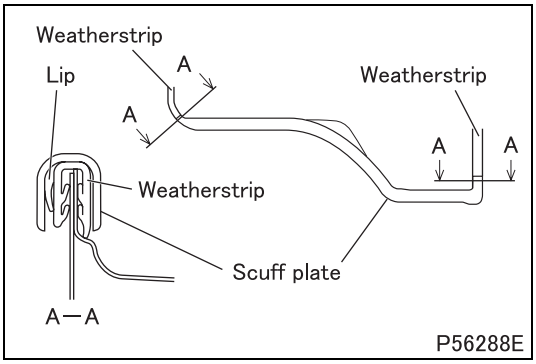

■ **Installation: Scuff plate**

- Install the scuff plate in such a manner that it holds down the lip of the weatherstrip.

M E M O

TRIM AND SCUFF PLATE <CREW CAB>

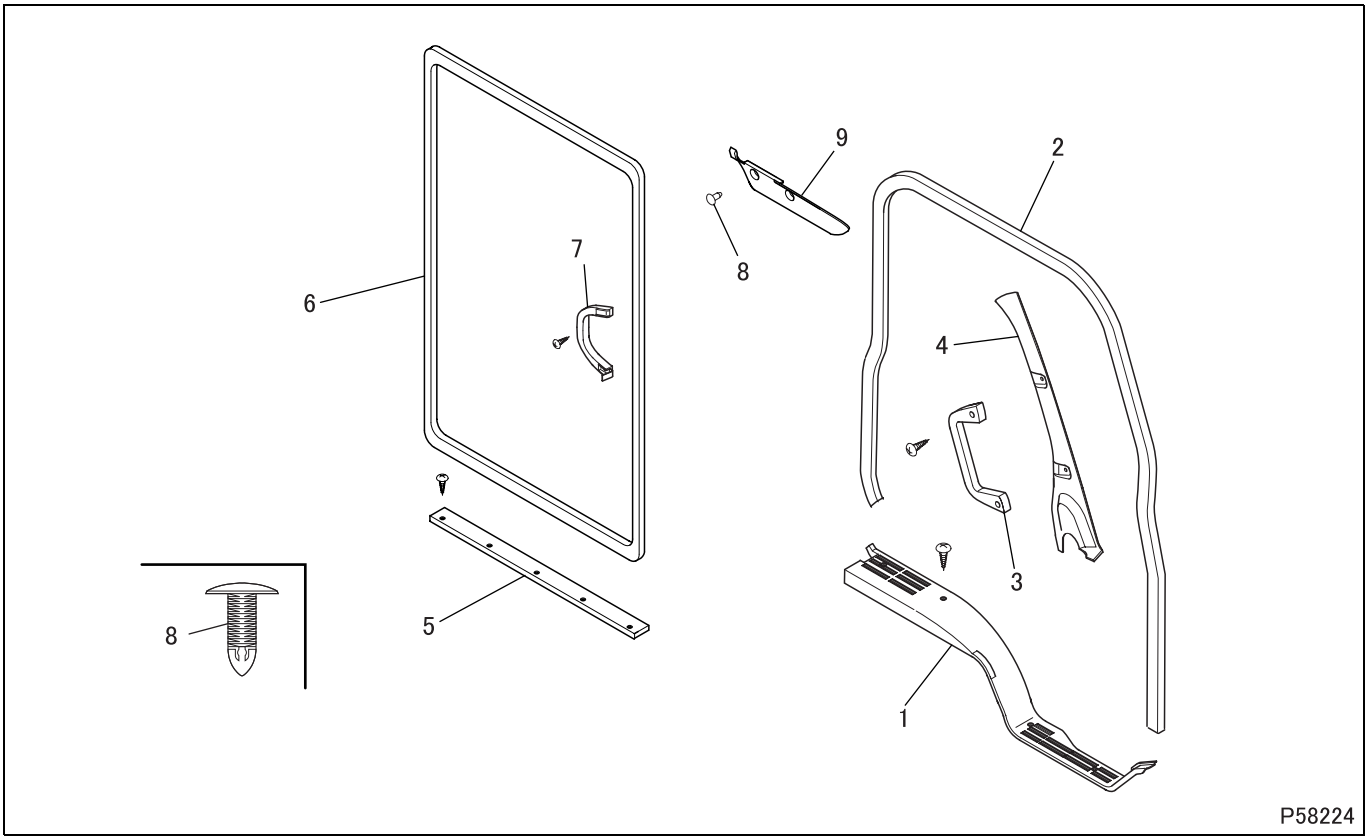

● **Removal sequence**

1 Front scuff plate
2 Weatherstrip
3 Front grip
4 Front pillar trim
5 Rear scuff plate
6 Weatherstrip
7 Rear grip
8 Clip
9 Center pillar trim

● **Installation sequence**

Follow the removal sequence in reverse.

◆**Removal procedure**◆

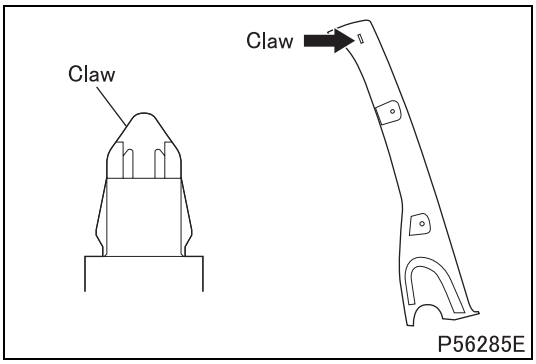

■ **Removal: Front pillar trim**

◆Installation procedure◆

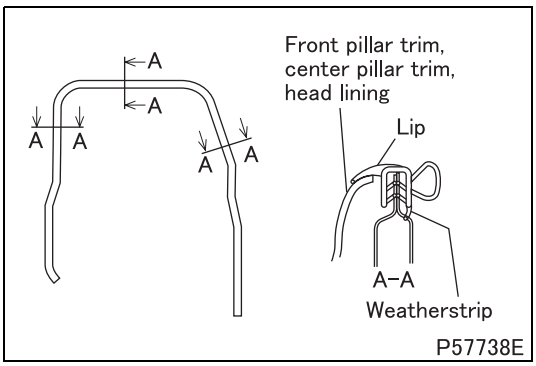

■ **Installation: Weatherstrip**

- Install the weatherstrip in such a manner that the lip of the strip holds down the front pillar trim, center pillar trim, and head lining.

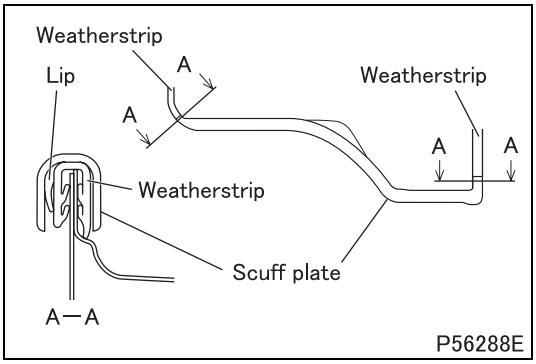

■ **Installation: Scuff plate**

- Install the scuff plate in such a manner that it holds down the lip of the weatherstrip.

HEAD LINING <EXCEPT CREW CAB>

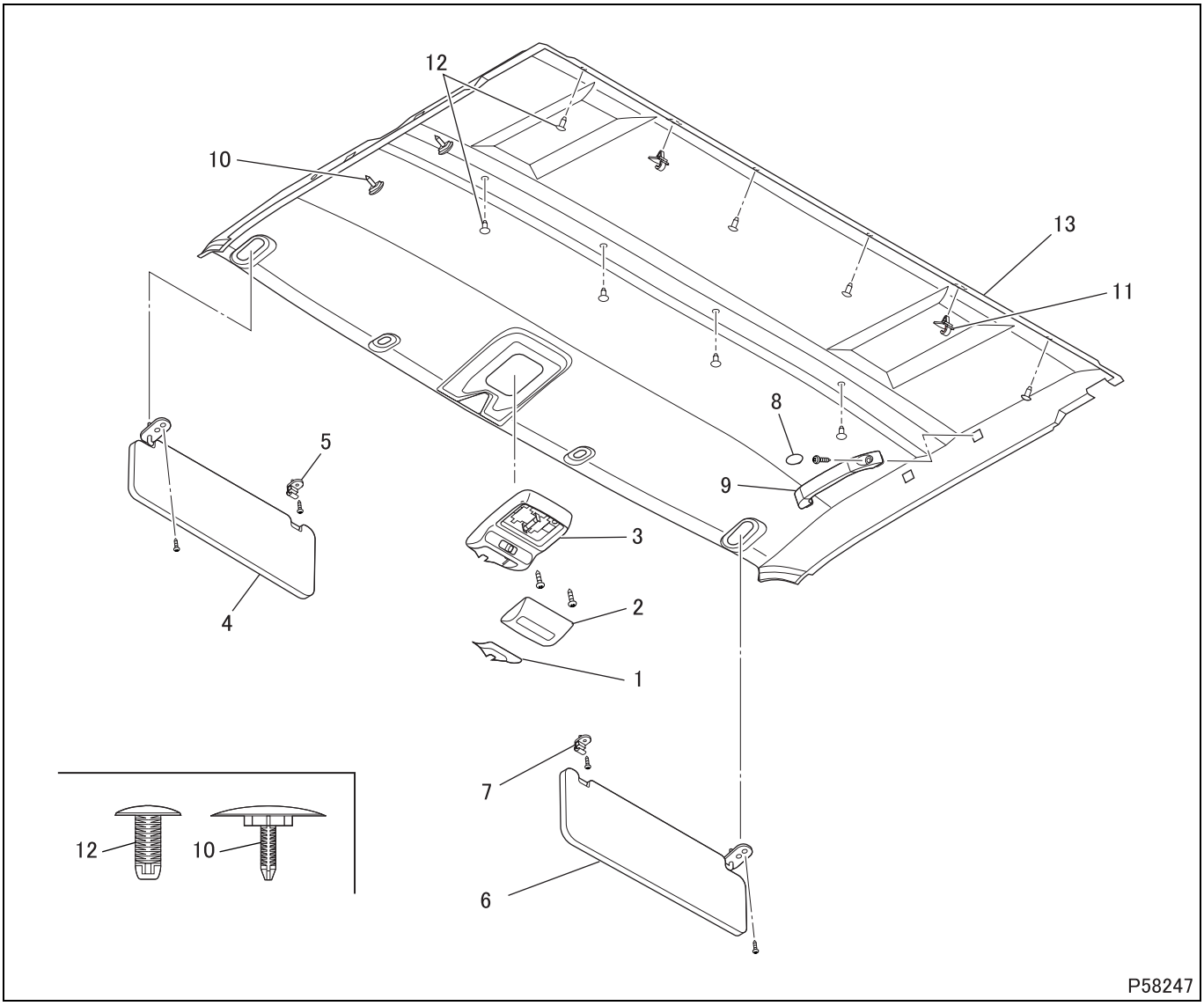

● **Removal sequence**

1 Cover
2 Lens
3 Room lamp
4 Sun visor (left-hand)
5 Sun visor hook
6 Sun visor (right-hand)
7 Sun visor hook
8 Cap
9 Grip
10 Plug
11 Coat hanger
12 Clip (× 8)
13 Head lining

● **Installation sequence**

Follow the removal sequence in reverse.

◆Removal procedure◆

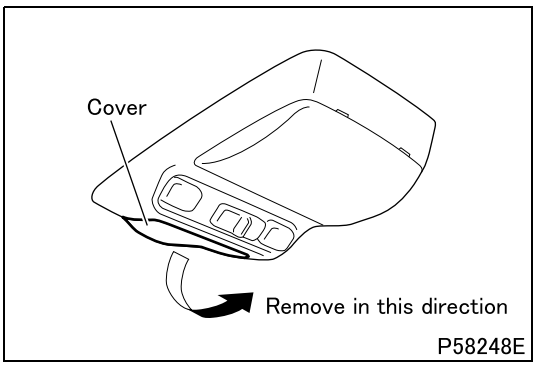

■ **Removal: Cover**

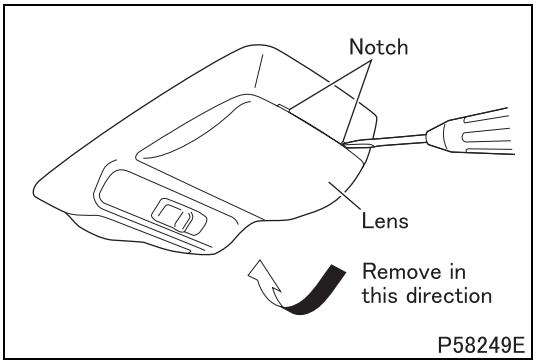

■ **Removal: Lens**

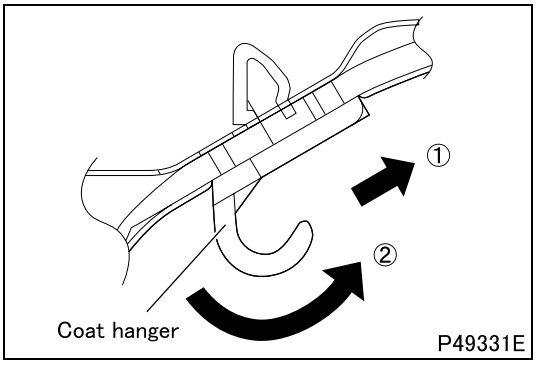

■ **Removal: Coat hanger**

- Remove the coat hanger from the head lining by pulling it in the direction of “2” while pressing it in the direction of “1”.

◆Installation procedure◆

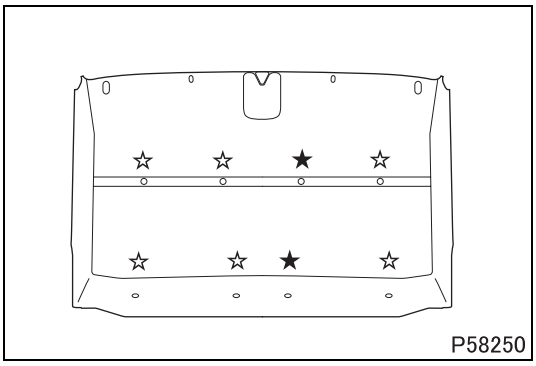

■ **Installation: Head lining**

- Locate the head lining correctly onto the cab by installing clips at the locations ★ (× 2). Install clips at the locations ☆ (× 6).

HEAD LINING <CREW CAB>

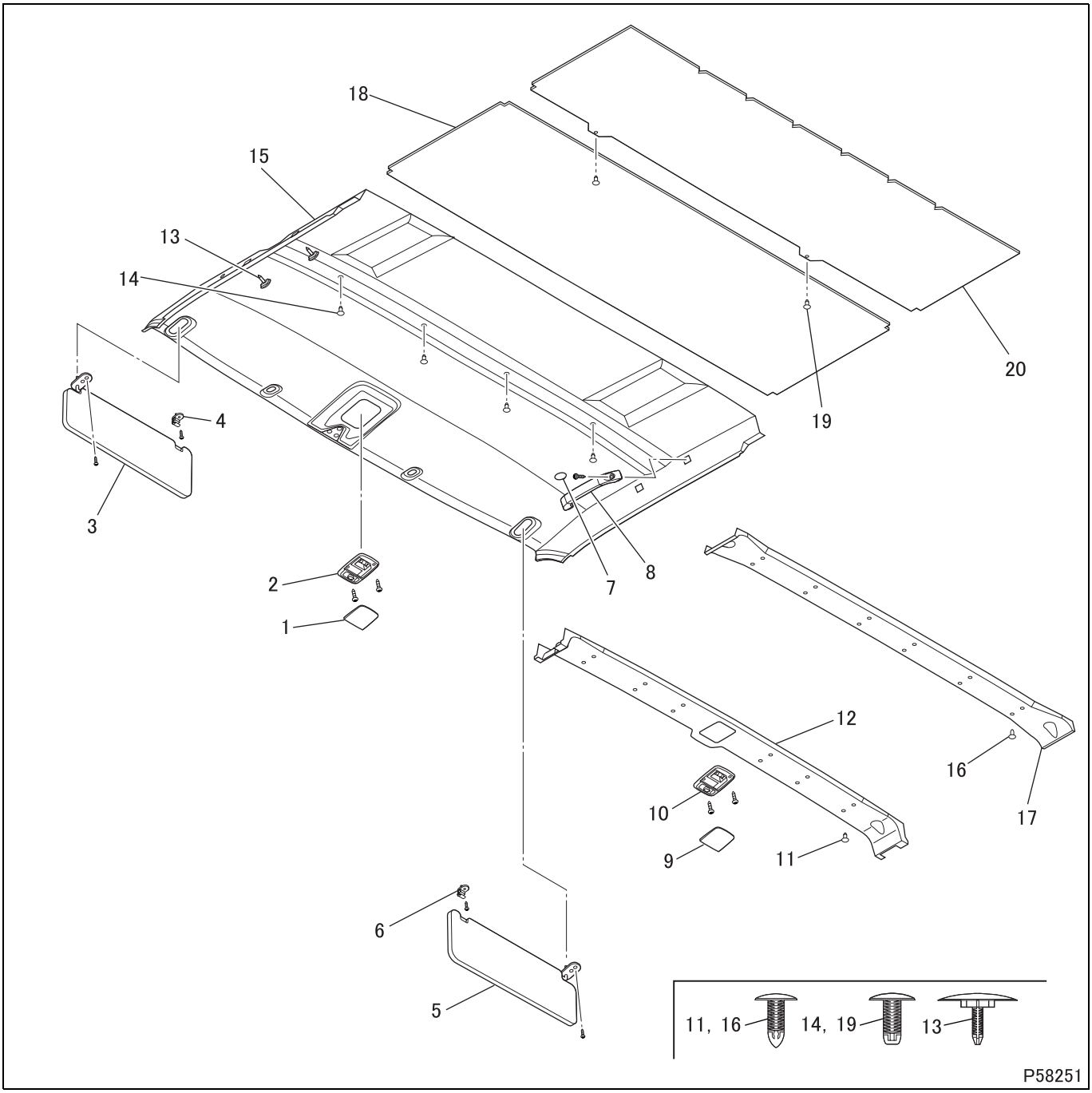

● **Removal sequence**

1 Lens
2 Room lamp
3 Sun visor (left-hand)
4 Sun visor hook
5 Sun visor (right-hand)
6 Sun visor hook
7 Cap
8 Grip
9 Lens
10 Rear room lamp
11 Clip (× 14)
12 Center roof garnish
13 Plug
14 Clip (× 4)
15 Front head lining
16 Clip (× 14)
17 Rear roof garnish
18 Center head lining
19 Clip
20 Rear head lining

● **Installation sequence**

Follow the removal sequence in reverse.

◆Removal procedure◆

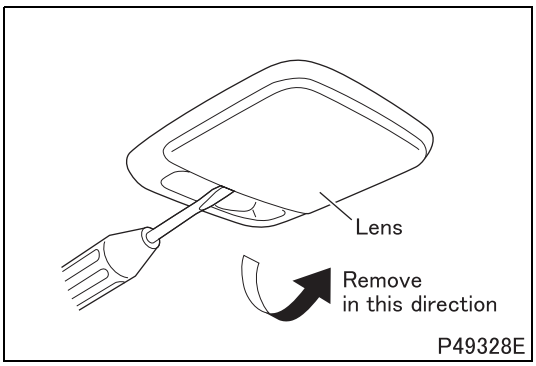

■ **Removal: Lens**

◆Installation procedure◆

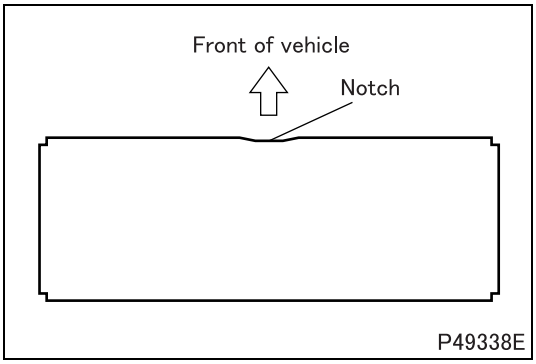

■ **Installation: Center head lining**

- On a standard-cab-width vehicle, install the center head lining with its edges directed as shown in the illustration.

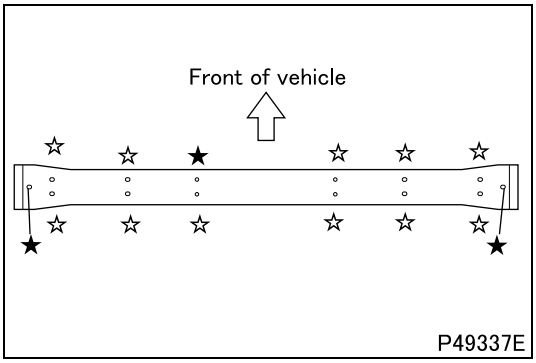

■ **Installation: Rear roof garnish**

- Locate the rear roof garnish correctly onto the cab by installing clips at the locations ★ (× 3). Install clips at the locations ☆ (× 11).

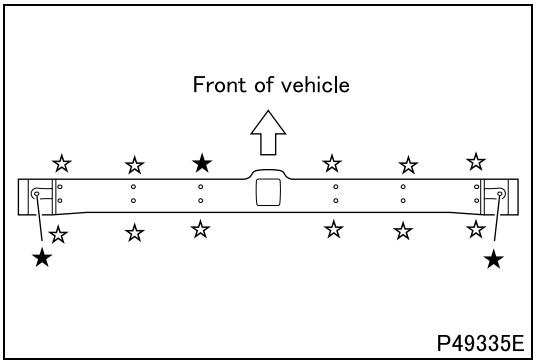

■ **Installation: Center roof garnish**

- Locate the center roof garnish correctly onto the cab by installing clips at the locations ★ (× 3). Install clips at the locations ☆ (× 11).

Group 54

Electrical

Table of Contents

Back

Home

MITSUBISHI FUSO TRUCK OF AMERICA, Inc.

Pub.No.TWSE0805-54

INDEX

HOW TO READ THIS GROUP 1

54-00A GENERAL

PRECAUTIONS FOR MAINTENANCE OPERATION 54-00A-2

54-00B SPECIFICATIONS

SPECIFICATIONS..... 54-00B-2

54-00C STRUCTURE AND OPERATION

1. Starter 54-00C-2
2. Alternator..... 54-00C-3
3. Headlamps..... 54-00C-6
4. Meter Cluster..... 54-00C-7
5. Daytime Running Light System..... 54-00C-16
6. Wiper Control 54-00C-18
7. Starter Continuous Energizing Preventing Function and Preheating Function..... 54-00C-20

54-00D TROUBLESHOOTING

TROUBLESHOOTING 54-00D-2

54-01 POWER, CHARGE AND GROUND CIRCUIT

HIGH-CURRENT FUSE BOX..... 54-01-2

FUSE BOX 54-01-4

(110) POWER CIRCUIT 54-01-6

(115) RESERVE POWER CIRCUIT 54-01-19

(125) BATTERY CHARGING CIRCUIT..... 54-01-20

(130) GROUND..... 54-01-22

54-02 STARTING, STOPPING AND PREHEATING CIRCUIT

(210) ENGINE STARTING CIRCUIT..... 54-02-2

(215) ENGINE STOPPING CIRCUIT..... (See Gr13EA.)

(220) ENGINE PREHEATING CIRCUIT..... 54-02-4

54-03 LIGHTING CIRCUIT

(310) HEADLAMP CIRCUIT 54-03-2

(313) DAYTIME RUNNING LIGHT CIRCUIT..... 54-03-4

(320) TAIL, CLEARANCE AND LICENSE PLATE LAMPS CIRCUIT 54-03-6

(325) STOP LAMP CIRCUIT..... 54-03-8

(330) TURN SIGNAL AND HAZARD LAMP CIRCUIT..... 54-03-10

(340) BACKUP LAMP CIRCUIT 54-03-12

(345) CAB LAMP CIRCUIT..... 54-03-14

(348) ILLUMINATION LAMP CIRCUIT..... 54-03-16

(349) IDENTIFICATION LAMP AND SIDE MARKER LAMP CIRCUIT..... 54-03-17

(352) VAN BODY DOME LIGHT CIRCUIT..... 54-03-18

54-04 METER CIRCUIT

(401) METER CLUSTER INTERNAL CIRCUIT..... 54-04-2

(410) TACHOMETER CIRCUIT 54-04-4

(412) SPEEDOMETER CIRCUIT 54-04-5

(420) FUEL GAUGE CIRCUIT 54-04-6

(425) WATER TEMPERATURE GAUGE CIRCUIT..... 54-04-7

54-05 INDICATOR AND WARNING LAMP CIRCUIT

(510) PARKING BRAKE INDICATOR CIRCUIT 54-05-2
(515) BRAKE WARNING CIRCUIT 54-05-4
(535) ENGINE OIL LEVEL WARNING CIRCUIT 54-05-6
(536) ENGINE OIL PRESSURE WARNING CIRCUIT 54-05-7
(537) OVERHEATING WARNING CIRCUIT 54-05-8
(540) BRAKE PAD WARNING CIRCUIT 54-05-9
(550) CAB TILT WARNING CIRCUIT ... 54-05-10
(566) FUEL FILTER WARNING CIRCUIT 54-05-11

54-06 CAB SIDE ELECTRICAL CIRCUIT

(610) CIGARETTE LIGHTER CIRCUIT .. 54-06-2
(612) AUDIO CIRCUIT 54-06-3
(614) WIPER AND WASHER CIRCUIT 54-06-4
(616) HORN CIRCUIT 54-06-5
(620) AIR-CONDITIONER CIRCUIT 54-06-6
(622) POWER WINDOW AND CENTRAL DOOR LOCK CIRCUIT 54-06-8
(629) MIRROR HEATER CIRCUIT 54-06-9

54-07 CHASSIS SIDE ELECTRICAL CIRCUIT

(710) EXHAUST BRAKE CIRCUIT 54-07-2

54-08 ENGINE AND TRANSMISSION SIDE ELECTRICAL CIRCUIT

(810) FOUR-WHEEL DRIVE CIRCUIT <FG> 54-08-2
(850) TRANSMISSION POWER TAKE-OFF CIRCUIT 54-08-3

54-09 OTHER CIRCUIT

(905) JOINT CONNECTOR (J/C) 54-09-2
(907) DIAGNOSIS SWITCH AND MEMORY CLEAR SWITCH 54-09-6
ELECTRONICALLY CONTROLLED FUEL SYSTEM ELECTRIC CIRCUIT DIAGRAM ..... (See Gr13EA.)
AUTO CRUISE SYSTEM ELECTRIC CIRCUIT DIAGRAM ..... (See Gr13EB.)
AUTOMATIC TRANSMISSION SYSTEM ELECTRIC CIRCUIT DIAGRAM ..... (See Gr23.)
ANTI-LOCK BRAKE SYSTEM ELECTRIC CIRCUIT DIAGRAM ..... (See Gr35E.)

54-10 ELECTRICAL EQUIPMENT INSTALLATION POSITIONS

Cab side

A SWITCH 54-10-2
B RELAY AND ELECTRONIC CONTROL UNIT 54-10-6
C FUSE, METER, SENSOR, BUZZER, MOTOR AND ACTUATOR 54-10-8
D AIR-CONDITIONER 54-10-9
E DOOR 54-10-10
F ROOF 54-10-11
J JOINTS OF MAIN HARNESS CONNECTORS 54-10-12

Engine and transmission

R ENGINE 54-10-14

S TRANSMISSION..... 54-10-16

Chassis side

T SWITCH AND SENSOR 54-10-19

U FUSE, RELAY AND CONNECTORS.....54-10-20

V MAGNETIC VALVE AND MOTOR.. 54-10-23

W BUZZER AND CONNECTORS 54-10-23

54-11 INSPECTION OF ELECTRICAL EQUIPMENT

#001 to #179 SWITCH 54-11-2

#180 to #249 RELAY 54-11-8

#250 to #349 SENSOR 54-11-9

#350 to #409 CONTROL UNIT 54-11-10

#410 to #509 MOTOR 54-11-11

#510 to #539 ACTUATOR 54-11-13

#560 to #609 MAGNETIC VALVE 54-11-13

#610 to #649 BUZZER, HORN 54-11-14

#650 to #699 LAMP 54-11-16

#750 to #859 OTHER..... 54-11-17

#860 BATTERY..... 54-11-19

#890 METER 54-11-22

54-12 STARTER AND ALTERNATOR

#930 STARTER..... 54-12-2

#940 ALTERNATOR 54-12-16

54-13 ON-VEHICLE INSPECTION AND ADJUSTMENT

#950 INSPECTION OF ALTERNATOR.. 54-13-2

#951 INSPECTION OF REGULATOR.... 54-13-3

#955 INSPECTION OF PREHEATING SYSTEM..... 54-13-4

#960 HEADLAMP AIMING 54-13-6

54-14 CONNECTOR CONFIGURATION CHART

CONNECTOR CONFIGURATION CHART 54-14-2

HOW TO READ THIS GROUP

HOW TO READ CIRCUITS (ELECTRICAL)

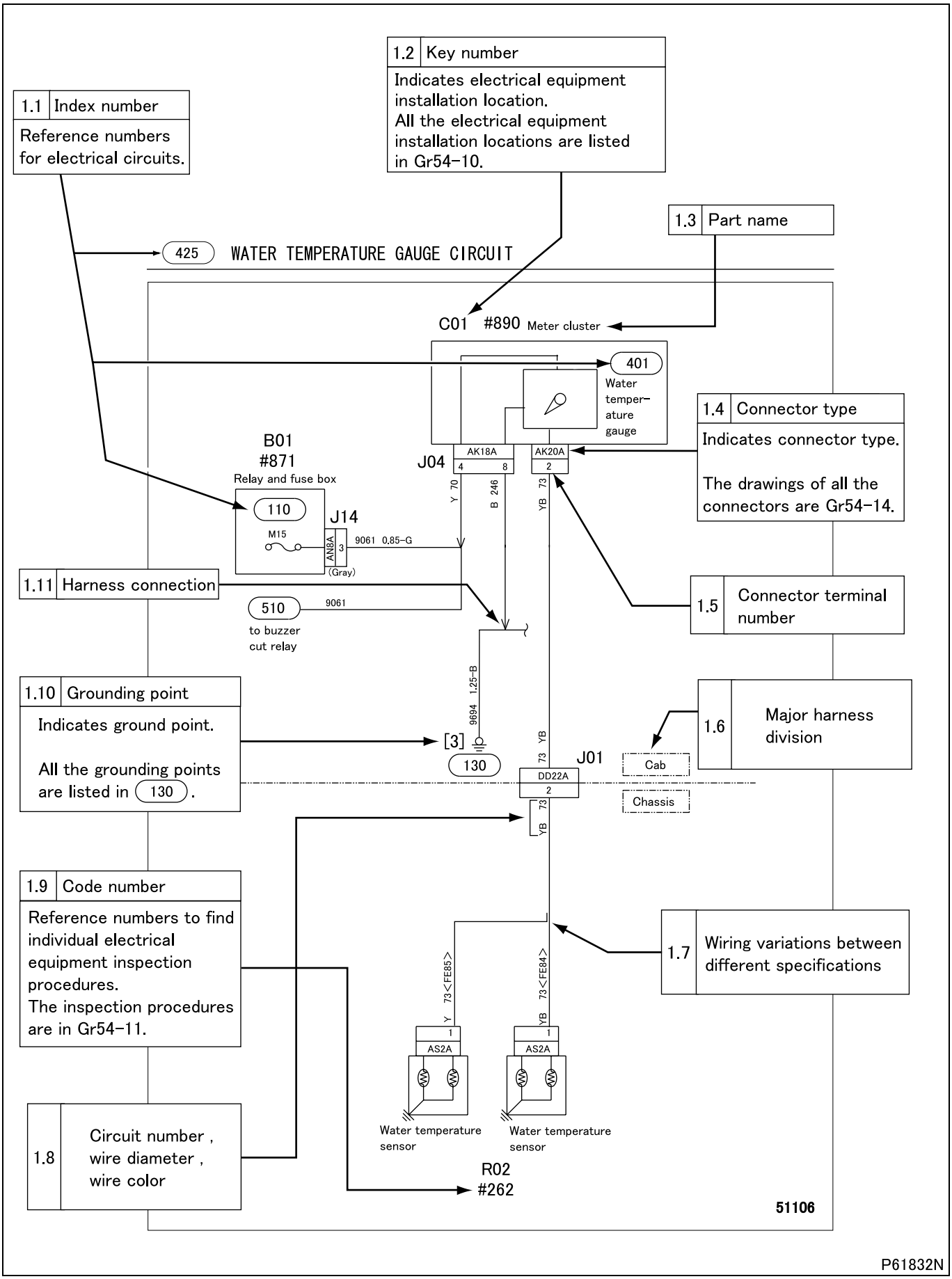

1.1 Index number: (100) to (999)

- Index numbers are used as reference numbers for electrical circuits. Each electrical circuit has been assigned its own index number.

1.2 Key number: A01 to Z99

- Key numbers indicate parts installation locations. The installation location of a part can be easily found using its key number shown in a circuit diagram.
  All of the electrical equipment installation locations are listed in Gr54-10.

1.3 Part name

1.4 Connector type (type indication)

- A list of the connectors used is included in Gr54-14.

1.5 Connector terminal number

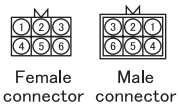

Connector terminal numbering starts with the upper left corner for female connectors and with the upper right corner for male connectors.

P50678E

1.6 Major harness division

- Major harness divisions are shown.

1.7 Wiring variations between different specifications

- Variations in wiring/circuit between different vehicle specifications are clearly indicated as shown.

1.8 Circuit number, wire diameter, wire color

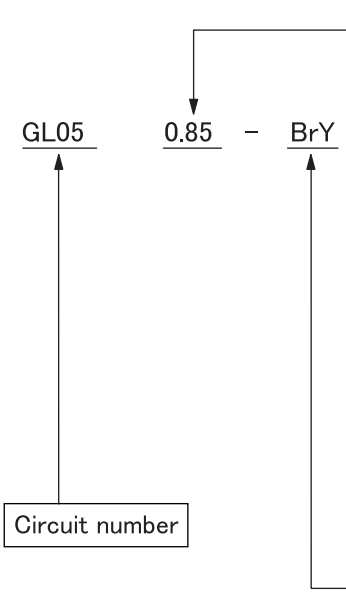

"Wire diameter" represents the cross section of the wire's conductive material. For example, "0.85" corresponds to 0.85 mm^2. On the circuit diagrams, the unit "mm^2" is omitted. Wires with a conductive cross section of 0.5 mm^2 are shown without the wire diameter or unit. As indicated below, shielding wires are marked with "SHIELD," and shielded wires are circled by a dotted line.

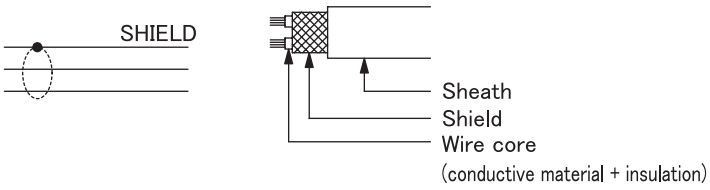

On the circuit drawings, twisted wires are indicated as shown below.

Wire colors are represented by the first letter of the color.
Colors that all start with the letter "B" are indicated as follows.

- BLACK → B
- BLUE → L
- BROWN → Br

Wires that have both base and tracer colors are indicated by two letters.

RY (Yellow tracer on Red base)

GL (Blue tracer on Green base)

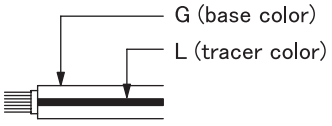

P50680E

1.9 Code number: #001 to #999

- Code numbers are reference numbers to find individual electrical equipment inspection procedures. The inspection procedure for a electrical equipment can be found using its code number shown in a circuit diagram.

HOW TO READ THIS GROUP

1.10 Grounding point: [1] to [99]

- Locations where wires are grounded to the vehicle. All of the grounding points are listed in (130).

1.11 Harness connection

- The arrow in the wiring diagram indicates where harnesses are connected, and NOT the flow of electricity.

Wire color

Wire color		Base color + tracer											
B	Black	BW	Black/ white	BY	Black/ yellow	BR	Black/red	BG	Black/ green	BL	Black/ blue		
Br	Brown	BrW	Brown/ white	BrB	Brown/ black	BrY	Brown/ yellow	BrR	Brown/ red	BrG	Brown/ green		
G	Green	GW	Green/ white	GR	Green/ red	GY	Green/ yellow	GB	Green/ black	GL	Green/ blue	GO	Green/ orange
Gr Gy	Gray	GrL GyL	Gray/ blue	GrR GyR	Gray/ red								
L	Blue	LW	Blue/ white	LR	Blue/red	LY	Blue/ yellow	LB	Blue/ black	LO	Blue/ orange	LG	Blue/ green
Lg	Light green	LgR	Light green/ red	LgY	Light green/ yellow	LgB	Light green/ black	LgW	Light green/ white				
O	Orange	OL	Orange/ blue	OB	Orange/ black	OG	Orange/ green						
P	Pink	PB	Pink/ black	PG	Pink/ green	PL	Pink/ blue	PN	Pink/ white				
Pu	Purple												
R	Red	RW	Red/ white	RB	Red/ black	RY	Red/ yellow	RG	Red/ green	RL	Red/blue	RO	Red/ orange
Sb	Sky blue												
V	Violet	VY	Violet/ yellow	VW	Violet/ white	VR	Violet/red	VG	Violet/ green				
W	White	WR	White/ red	WB	White/ black	WL	White/ blue	WG	White/ green	WO	White/ orange		
Y	Yellow	YR	Yellow/ red	YB	Yellow/ black	YG	Yellow/ green	YL	Yellow/ blue	YW	Yellow/ white	YO	Yellow/ orange
		YP	Yellow/ pink	YV	Yellow/ violet								

54-00A GENERAL

PRECAUTIONS FOR MAINTENANCE OPERATION

- Before performing service operations, inquire into the customer's complaints and ascertain the condition by checking the total distance travelled, the conditions under which the vehicle is operated, and other relevant factors about the vehicle. And note the necessary information. This information will help you to service the vehicle efficiently.

- Check the location of the fault, and identify its cause. Based on your findings, determine whether parts must be removed or disassembled. Then, follow the service procedure given in this manual.

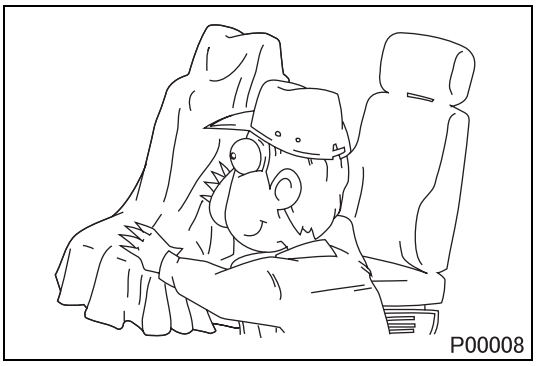
P00008

- Perform service operations on a level surface. Before starting, take the following preparatory steps:
  - To prevent soiling and damage, place covers over the seats, trim and floor in the cab and over the paintwork of the body.

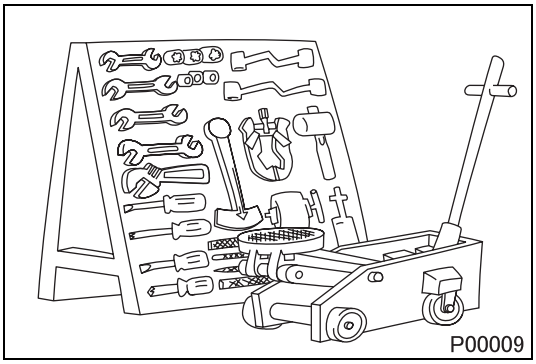
P00009

- Prepare all the general and special tools necessary for the job.

WARNING ⚠

- **Special tools must be used wherever specified in this manual. Do not attempt to use other tools since they could cause injuries and/or vehicle damage.**

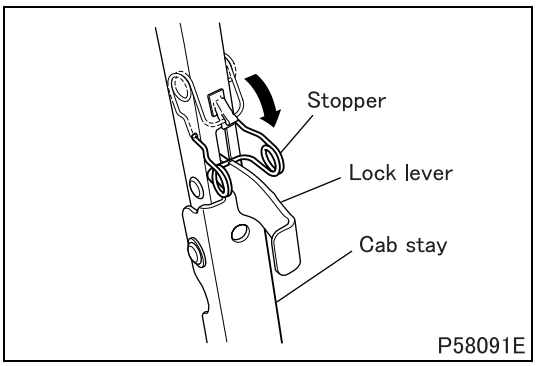

P58091E

- After tilting the manual tilt type cab, be sure to engage the stopper with the lock lever to lock the cab stay securely.

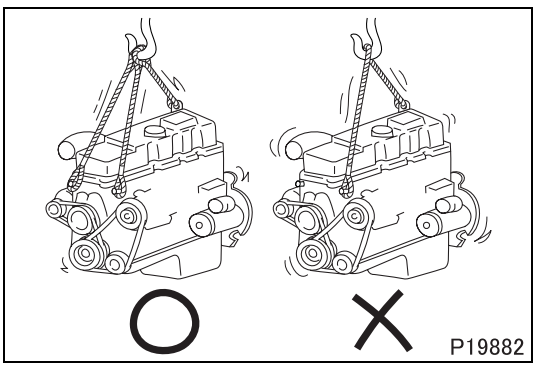
P19882

- Take extreme care when removing/installing heavy items such as engine, transmission and axle. When lifting heavy items using a cable etc., observe the following precautions.
  - Identify the mass of the item being lifted. Use the cable that is strong enough to support the mass.

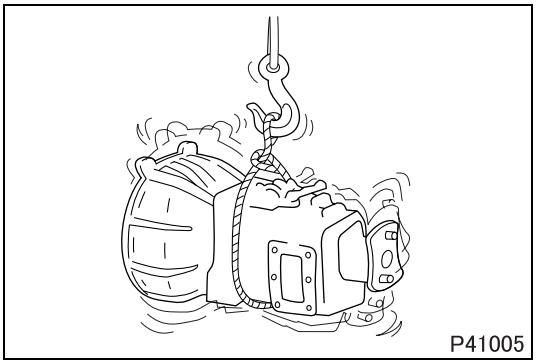

- If lifting eyes are not provided on the item being lifted, tie a cable around the item taking into account the item's center of gravity.

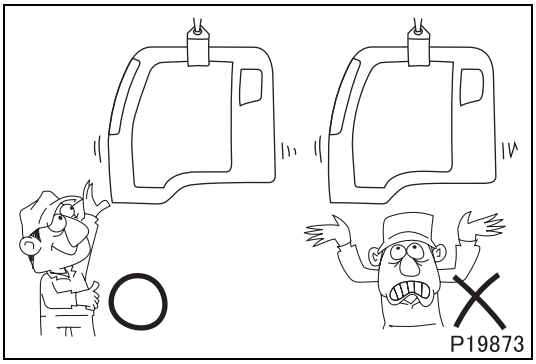

- Do not allow anyone to pass or stay under a lifted item which may possibly fall.

- Never work in shoes that have oily soles.
  When working with a partner or in a group, use pre-arranged signals and pay constant attention to safety. Be careful not to touch switches and levers unintentionally.

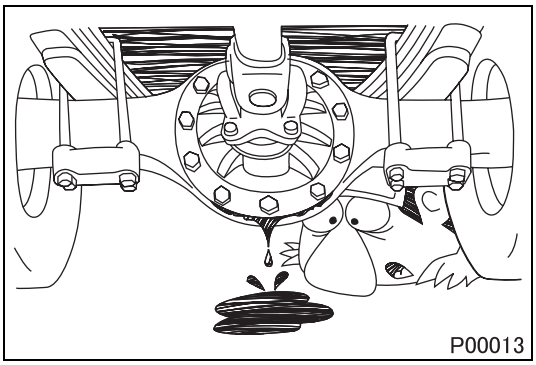

- Inspect for oil leakage etc. before washing the vehicle. If the order is reversed, any oil leakage or fault that may exist could go unnoticed during inspection.

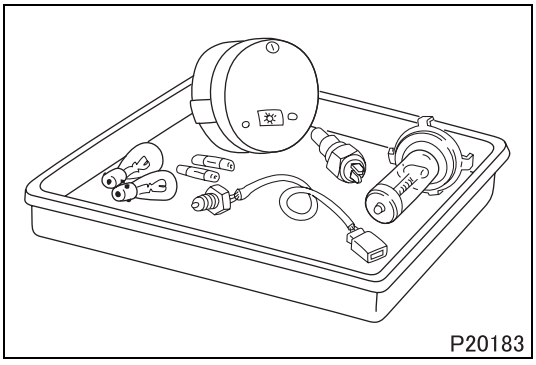

- Prepare replacement parts ready for installation.

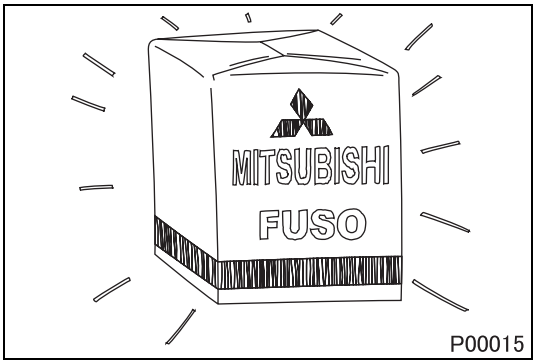

P00015

- Oil seals, packings, O-rings and other rubber parts, gaskets, and split pins must be replaced with new ones after removal. Use only genuine MITSUBISHI replacement parts.

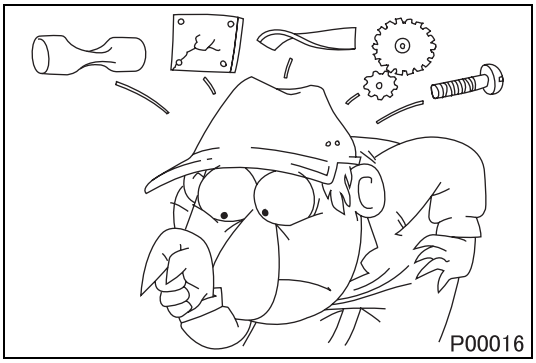
P00016

- When disassembling parts, visually check them for wear, cracks, damage, deformation, deterioration, rust, corrosion, defective rotation, fatigue, clogging and any other possible defect.

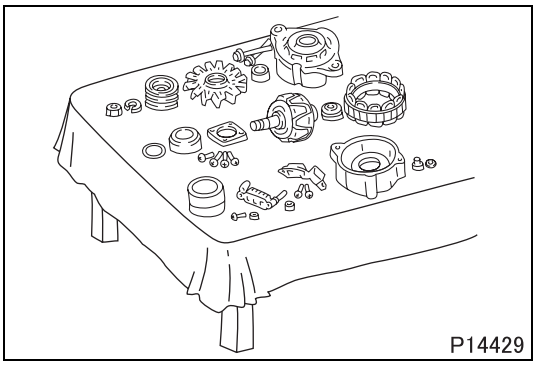
P14429

- To facilitate correct reassembly of parts, make alignment marks on them before disassembly and arrange disassembled parts neatly. Make punch marks and other alignment marks where they will not detract from parts' functionality and appearance.
- After removing parts from the vehicle, cover the area to keep it free of dust.

CAUTION ⚠

- **Be careful not to mix up identical parts, similar parts and parts that have left/right alignments.**
- **Keep new replacement parts and original (removed) parts separately.**

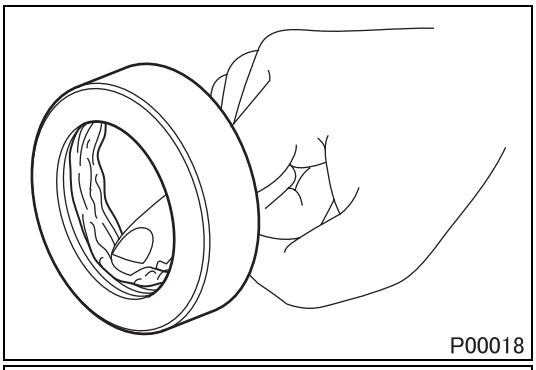
P00018

- Apply the specified oil or grease to U-seals, oil seals, dust seals and bearings before reassembly.
- Always use the specified oils and greases when performing inspection or replacement. Immediately wipe away any excess oil or grease with a rag.

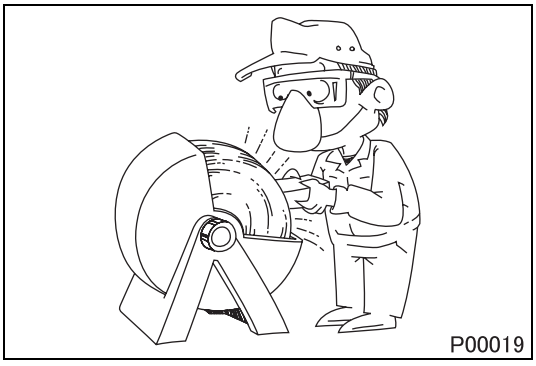
P00019

- Wear safety goggles when using a grinder or welder. Wear gloves when necessary, and watch out for sharp edges and other items that might wound your hands.

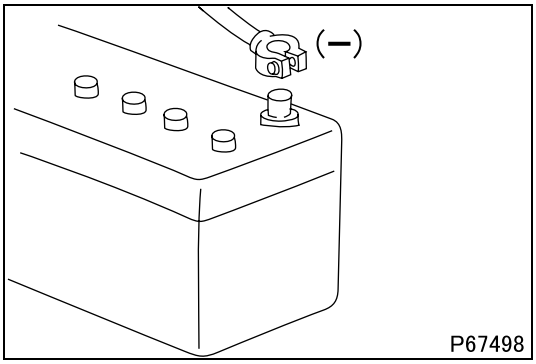

- Before working on the electrical system, disconnect the (–) battery cable to prevent short circuits.

CAUTION ⚠

- **Make sure the starter switch and lighting switches are OFF before disconnecting or connecting battery cable. Semiconductor components may otherwise be damaged.**

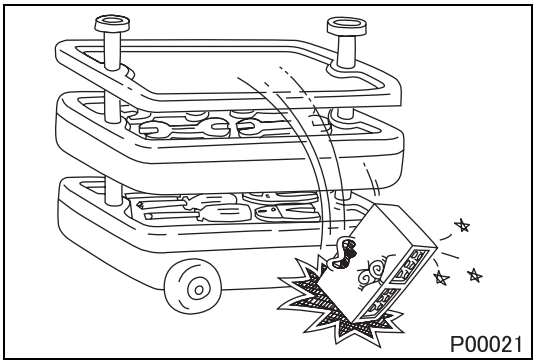

- Carefully handle sensors relays, and other items that are sensitive to shock and heat. Do not remove or paint the cover of any control unit.

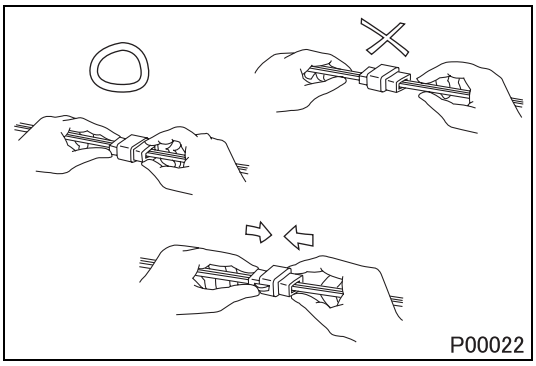

- When separating connectors, grasp the connectors themselves rather than the harnesses.
- To separate locking connectors, first push them in the direction of the arrows. To reconnect locking connectors, push them together until they click.

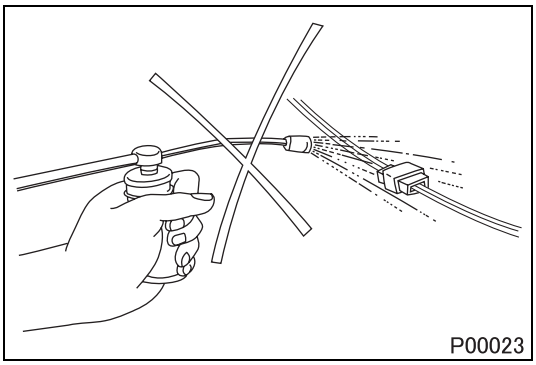

- Before washing the vehicle, cover electrical parts to keep them dry. (Use plastic sheets or the like.) Keep water away from harness connectors and sensors and immediately wipe off any water that gets on them.

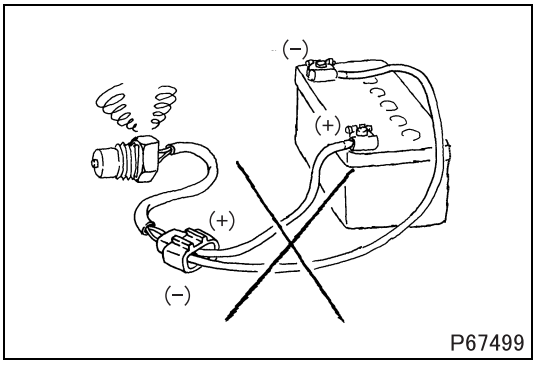

- When applying a voltage to a part for inspection purposes, check that the (+) and (–) cables are connected properly then gradually increase the voltage from zero. Do not exceed the specified voltage.
  Remember that control units and sensors do not necessarily operate on the battery voltage.

1. Handling Precautions for Electric Circuits

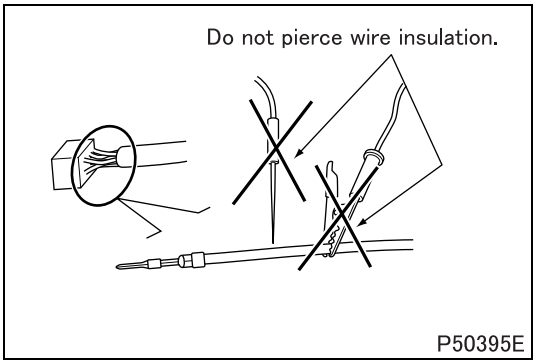

CAUTION ⚠

- **Do not pierce wire insulation with test probes or alligator clips when performing electrical inspections. Doing so can, particularly with the chassis harness, hasten corrosion.**

1.1 Inspection of harnesses

(1) Inspections with connectors fitted together

(1.1) Waterproof connectors

- Connect an inspection harness and connector A between the connectors B of the circuit to be inspected. Perform the inspection by applying a test probe C to the connectors of the inspection harness. Do not insert the test probe C into the wire-entry sides of the waterproof connectors since this would damage their waterproof seals and lead to rust.

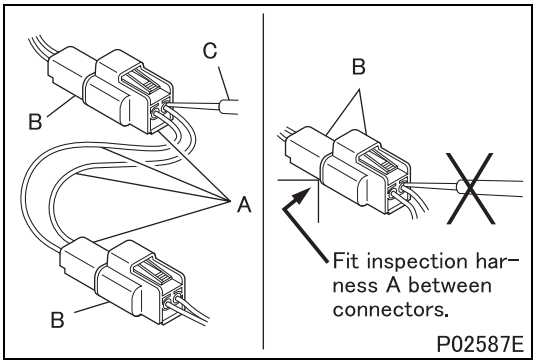

(1.2) Non-waterproof connectors

- Perform the inspection by inserting a test probe C into the wire-entry sides of the connectors. An extra-narrow probe is required for control unit connectors, which are smaller than other types of connector. Do not force a regular-size probe into control unit connectors since this would cause damage.

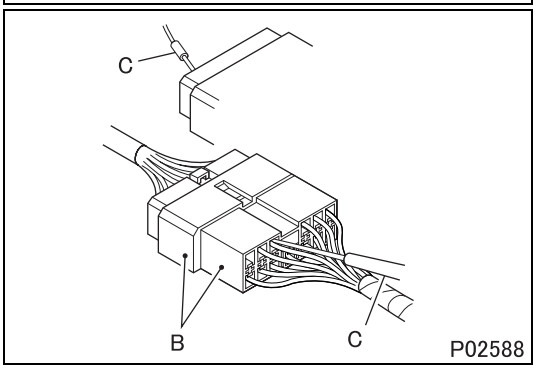

(2) Inspections with connectors separated

(2.1) Inspections on female terminals

- Perform the inspection by carefully inserting a test probe into the terminals. Do not force the test probe into the terminals since this could deform them and cause poor connections.

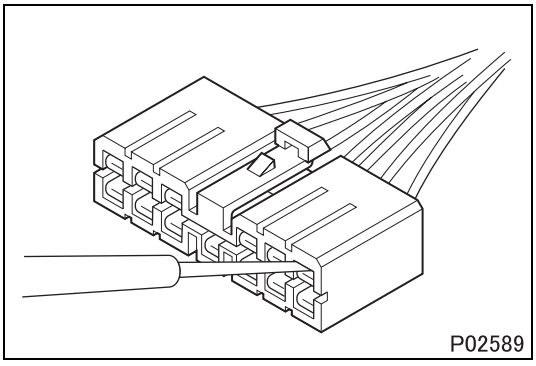

(2.2) Inspections on male terminals

- Perform the inspection by applying test probes directly to the pins.

CAUTION ⚠

- **Be careful not to short-circuit pins together with the test probes. With control unit connectors, short-circuiting of pins can cause damage to the control unit's internal circuitry.**

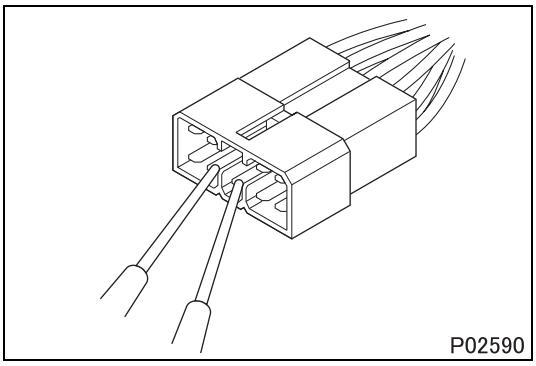

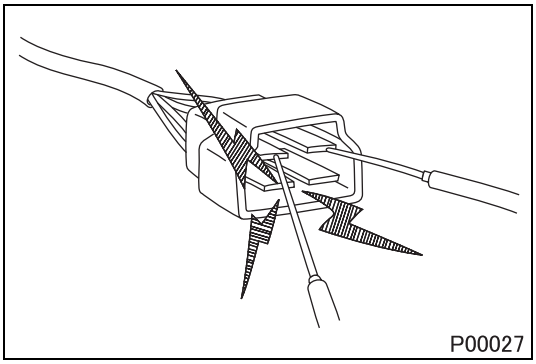

- When using a multimeter to check continuity, do not allow the test probes to touch the wrong terminals.

1.2 Inspection of connectors

(1) Visual inspection

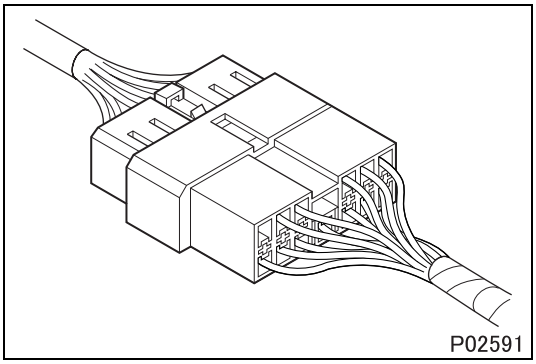

- Check that the connectors are fitted together securely.

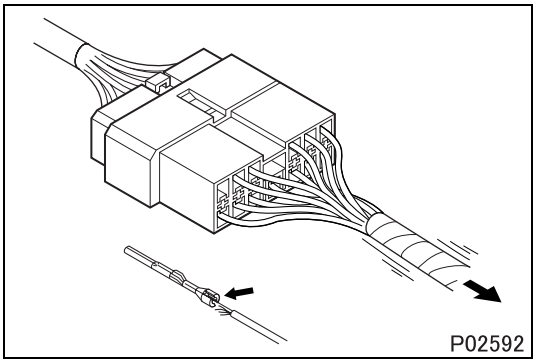

- Check whether wires have been separated from their terminals due to pulling of the harness.

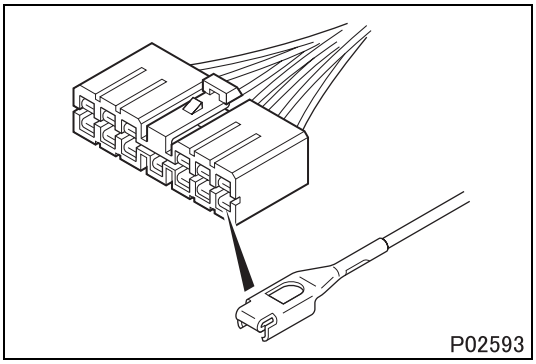

- Check that male and female terminals fit together tightly.
- Check for defective connections caused by loose terminals, by rust on terminals, or by contamination of terminals by foreign substances.

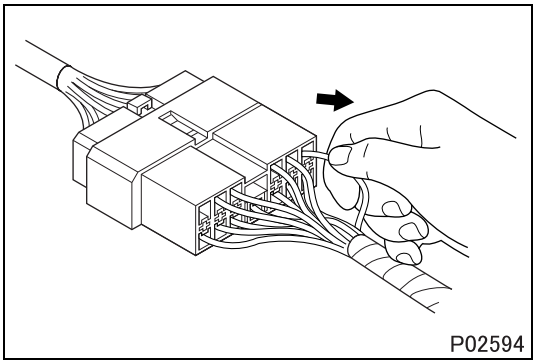
P02594

(2) Checking for loose terminals

- If connector terminal retainers become damaged, male and female terminals may not mate with each other when the connector bodies are fitted together. To check for such terminals, gently pull each wire and see whether any terminals slip out of their connector housings.

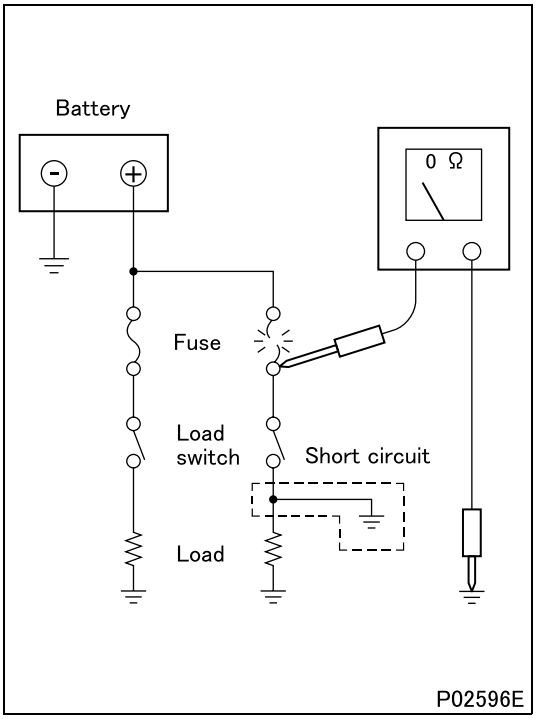

P02596E

1.3 Inspections when a fuse blows

- Remove the fuse, then measure the resistance between ground and the fuse's load side.
  Next, close the switch of each circuit connected to the fuse. If the resistance measurement between any switch and ground is zero, there is a short circuit between the switch and the load. If the resistance measurement is not zero, the circuit is not currently short-circuited; the fuse probably blew due to a momentary short circuit.

- The main causes of short circuits are as follows:
  - Harnesses trapped between chassis parts
  - Harness insulation damage due to friction or heat
  - Moisture in connectors or circuitry
  - Human error (accidental short-circuiting of components)

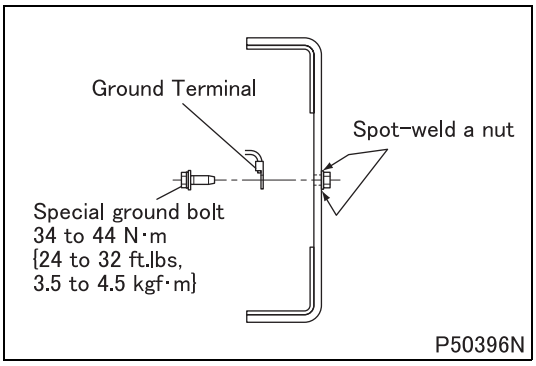

P50396N

1.4 Inspection of chassis ground

- A special ground bolt is used to tighten a ground terminal. When servicing the ground point, be sure to follow the procedures described below:
  - When reinstalling the ground bolt
    Tighten the ground bolt to the specified torque.
  - When relocating the ground point
    A special ground bolt must be used. Spot-weld a nut to a frame and tighten the ground bolt to the specified torque. Be sure to apply touch-up paint to the welded point.

2. Service Precautions for Alternators

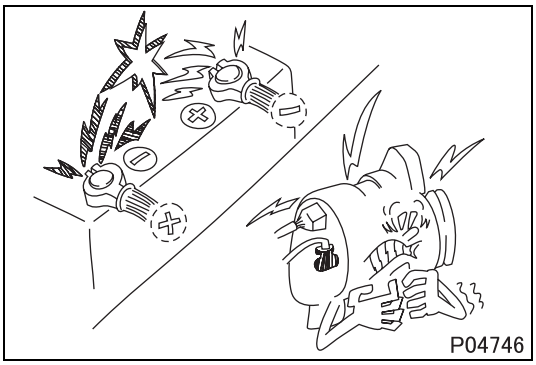

- When servicing alternators, observe the following precautions:
  - Never reverse the polarity of battery connections.
    If the polarity of the battery connections were to be reversed, a large current would flow from the battery to the alternator, damaging the diodes and regulator.

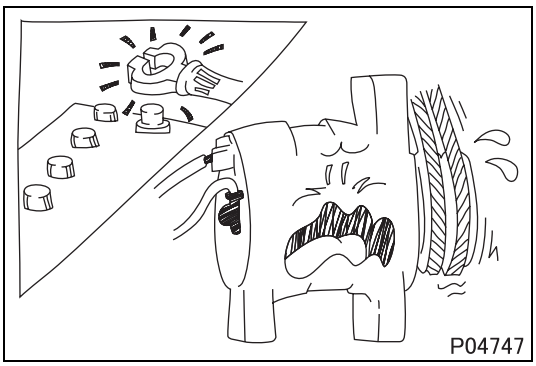

- Never disconnect the battery cables with the engine running.
  Disconnection of the battery cables during engine operation would cause a surge voltage, leading to deterioration of the diodes and regulator.

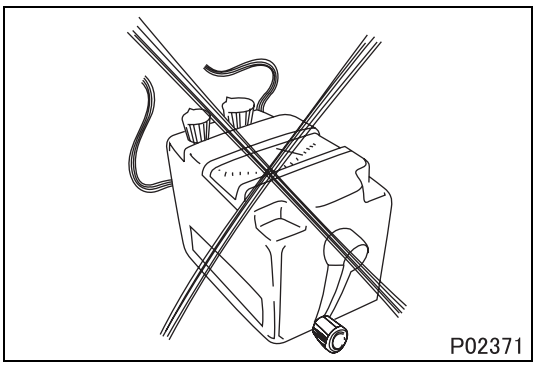

- Never perform inspections using a high-voltage multimeter.
  The use of a high-voltage multimeter could damage the diodes and regulator.

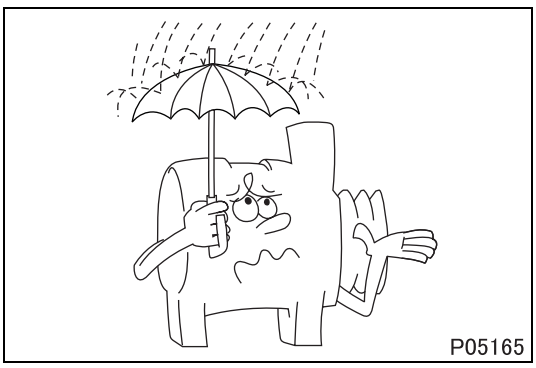

- Keep alternators dry.
  Water on alternators can cause internal short circuits and damage.

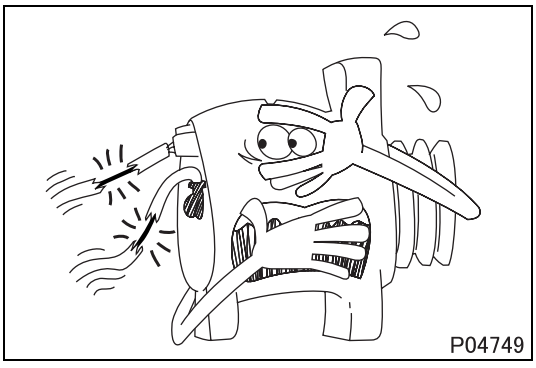

- Never operate an alternator with the B and L terminals short-circuited. Operation with the B and L terminals connected together would damage the diode trio.

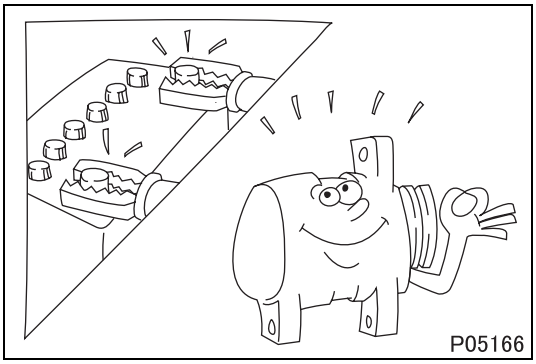

- Disconnect the battery cables (+) and (–) before quick-charging the battery with a quick charger.
  Unless the battery cables are disconnected, quick-charging can damage the diodes and regulator.

3. Intermittent Faults

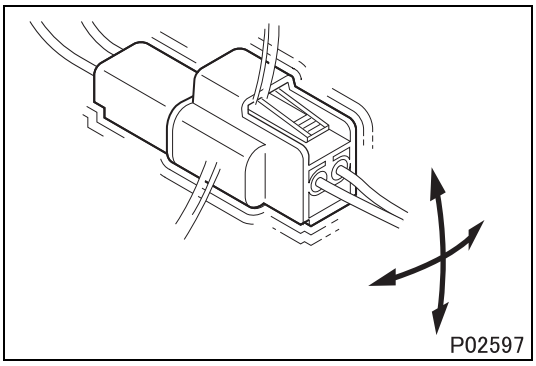

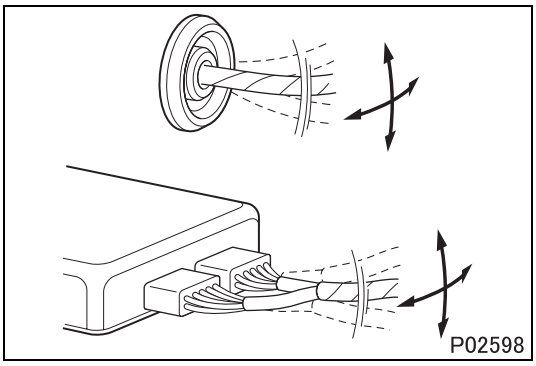

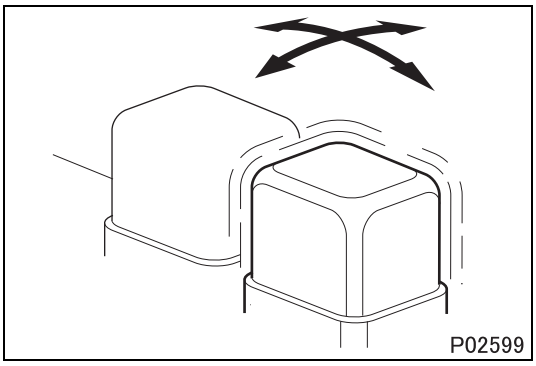

- An intermittent fault typically occurs only under certain operating conditions. Once these conditions have been identified, the cause of the intermittent fault can be ascertained easily. First, ask the customer about the vehicle operating conditions and weather conditions under which the fault occurs. Also ask about the frequency with which the fault occurs and about the fault symptoms. Then, reproduce the fault based on this information.
  In accordance with the conditions under which the fault occurs, determine whether the fault is caused by vibration, heat or other factors. if vibration is a possible factor, see if the fault can be reproduced by performing the following checks on individual connectors and other parts:
  - Gently move connectors up and down and to left and right.
  - Gently move wiring harnesses up and down and to left and right.
  - Gently wiggle sensors and other devices by hand.
  - Gently wiggle wiring harnesses on suspension systems and other moving parts.

- Connectors and other parts to be checked are those included or given as likely fault locations in inspection procedures corresponding to diagnosis codes and/or fault symptoms.

4. Precautions for Arc Welding

- When arc welding is performed, current from the welder flows to ground via the vehicle's metal parts. Unless appropriate steps are taken, this current can damage control units, other electrical devices and wiring harnesses. And any electrical device near the point on the vehicle to which the (–) cable of the welder is connected, might be largely damaged.

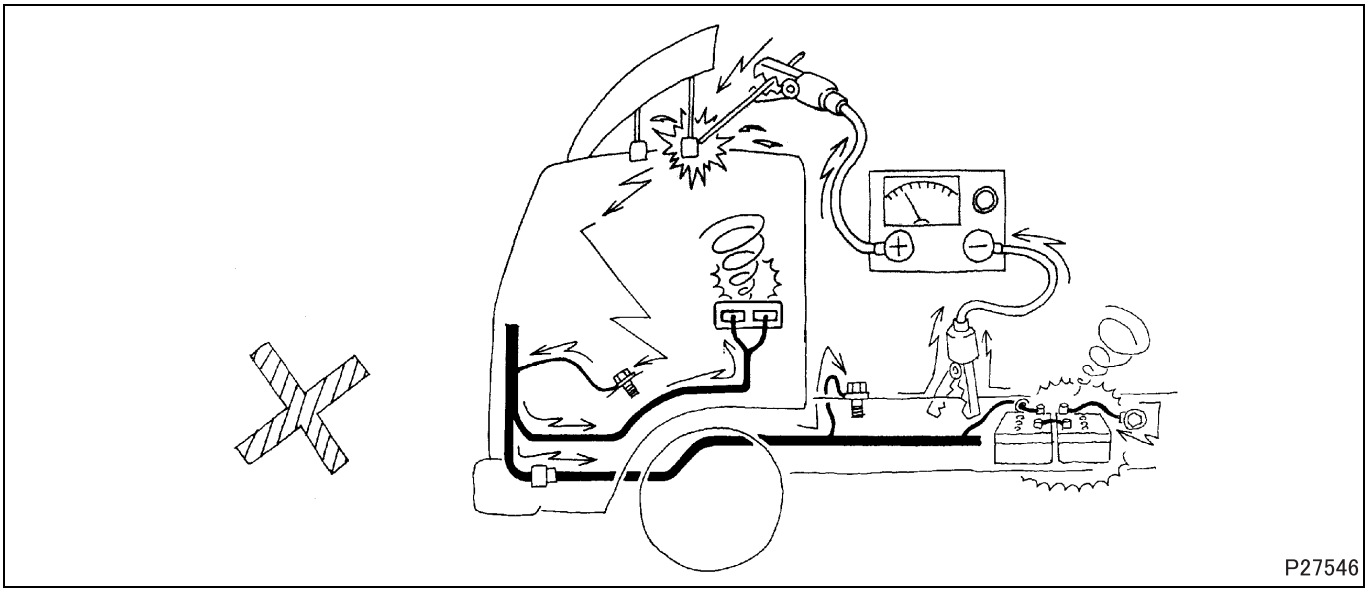

- Current flows backward as shown below.

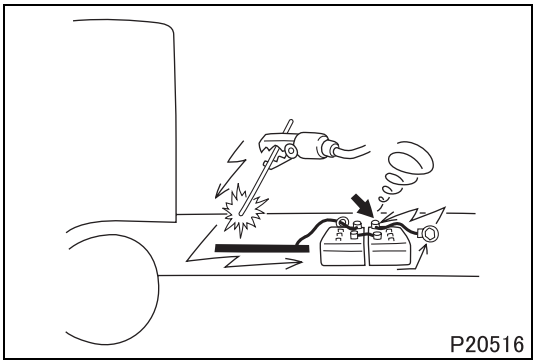

4.1 From battery (–) cable

To prevent damage to the battery and to electrical devices that are connected directly to the battery, it is essential to disconnect the battery's (–) cable.

4.2 Procedure

- Turn the starter switch to the LOCK position.
- Disconnect the battery's (–) cable.
- Cover all parts of the vehicle that may be damaged by welding sparks.
- Connect the welder's (–) cable to the vehicle as close as possible to the area being welded. Do not connect the welder's (–) cable to the cab if the frame is being welded, and vice versa.
- Set the welding current in accordance with the part being welded.

54-00B SPECIFICATIONS

SPECIFICATIONS

Battery

Item		Specifications
Model		130E41L
Voltage × Quantity	V	12 × 2
Capacity (5-hour rating)	Ah	92

Alternator

Item		Specifications
Manufacturer		MITSUBISHI ELECTRIC
Type		Alternator with built-in regulator (without brush, external fan)
Model		A4TU1593
Output	V-A	12–100

Starter and Preheat System

Item			Specifications
Starter	Manufacturer		MITSUBISHI ELECTRIC
	Model		M008T55671
	Output	V-kW	12–3.0
	Reduction gear mechanism		Planetary gears
	Magnetic switch operating voltage	V	8 or less
Starter relay	Model		U001X13972
	Excitation current	V-A	12–4
	Closing voltage	V	8 or less
	Opening voltage	V	3.5 or less
	Allowable cutoff current	A	200
Glow relay <Except FE83>	Model		U001T11872
	Excitation current	V-A	12–4
	Closing voltage	V	8 or less
	Opening voltage	V	3.5 or less
	Allowable cutoff current	A	60
	Temperature fuse capacity	A	127
Glow electronic control unit <FE83>	Manufacturer		Bosch
	Operating voltage	V	8 to 16
Glow plug	Model		Sheathed type
	Excitation current	V-A	11–5 (reference value)

Lighting

Item			Specifications
Headlamp	Model		Unconventional, rectangular, 2-lamp-system, semi-sealed beam
	Type		Parabola reflector type
	Upper beam (HIGH)	W	HB2 halogen 60/55 (HIGH/LOW)
	Lower beam (LOW)	W	
	Parking lamp	W	5
Front side turn signal lamp (serving also as hazard warning lamp)		W	21
Clearance and side marker lamp		W	7.5
Rear combination lamp	Stop and tail lamp (stop/tail)	W	21/5 (double filament type)
	Rear turn signal lamp (serving also as hazard warning lamp)	W	21
	Backup lamp	W	21
License plate lamp		W	7.5 <Except crew cab, FG>, 8 <Crew cab, FG>
Identification lamp		W	7.5
Cab lamp		W	10

Meter

Item			Specifications
Meter cluster	Manufacturer		DENSO
	Voltage	V	12
	Speedometer indicating range	km/h {MPH}	0 to 160 ($^{+3.5}_{0}$ at 60 km/h) {0 to 100 ($^{+2.5}_{0}$ at 40 MPH)}
	Tachometer indicating range	rpm	0 to 4000 (±150 at 3000 rpm)
	Water temperature gauge indicating range		<M/T> 109°C {228°F}, 70 to 101°C {158 to 214°F}, 50°C {122°F} P102527N <A/T> 109°C {228°F}, 70 to 101°C {158 to 214°F}, 50°C {122°F} P102528N
	Meter warning buzzer	Rated current mA	50 or less
		Sound pressure dB	60 $^{+6}_{0}$ (at 1 m {3.3 ft.})

A/T: Automatic transmission
M/T: Manual transmission

Relay, Radio, Motor, Horn, Buzzer

Item			Specifications
Minimum operating voltage of relay		V	8 or less
Loudspeaker	Rated input	W	15
	Maximum input	W	25
	Impedance	Ω	4 ± 0.6
Wiper motor	Rated voltage	V	12
	No-load current	A	4 or less
	Bound current	A	30 or less
Washer motor	Rated voltage	V	12
	Rated current	A	3.8 or less
Power window motor	Rated voltage	V	12
	Rated current	A	5 or less
Electric horn	Rated voltage	V	12
	Current consumption	A	3 or less
	Sound pressure	dB	110 ± 5 (at 2 m {6.6 ft.})
Back buzzer	Rated voltage	V	12
	Rated current	mA	50 or less
	Sound pressure	dB	85 ± 10 (at 1 m {3.3 ft.})
Cab tilt buzzer <Except crew cab>	Rated voltage	V	12
	Rated current	mA	66 or less
	Sound pressure	dB	73 ± 10 (at 1 m {3.3 ft.})
Hydraulic warning buzzer (only attached hydraulic brake)	Rated voltage	V	12
	Rated current	mA	100 or less
	Sound pressure	dB	90 to 105 (at 1 m {3.3 ft.})

54-00C STRUCTURE AND OPERATION

1. Starter

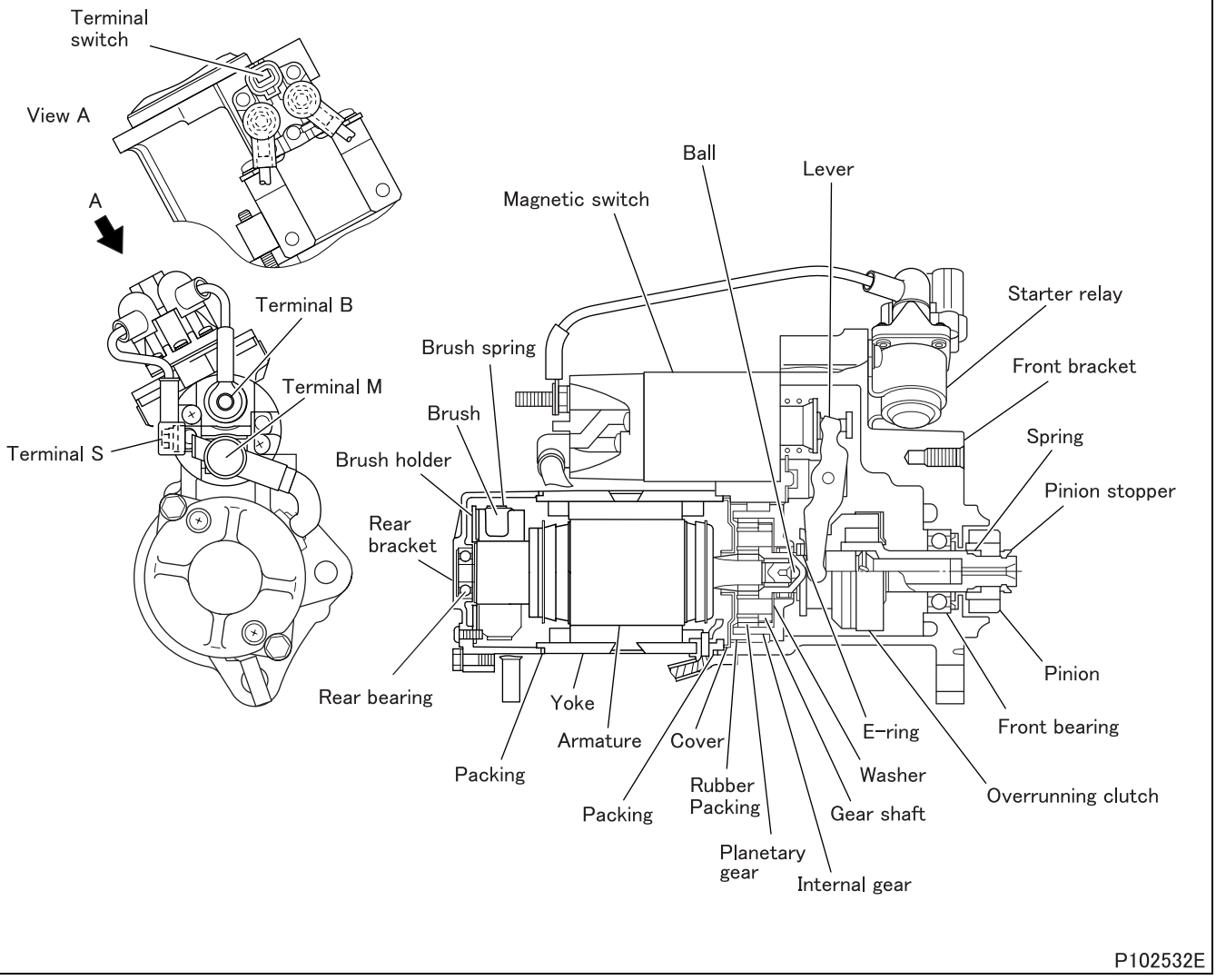

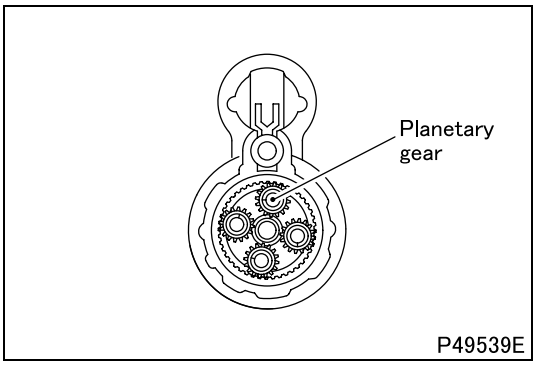

- This starter uses planetary gears as its reduction gearing mechanism.

2. Alternator

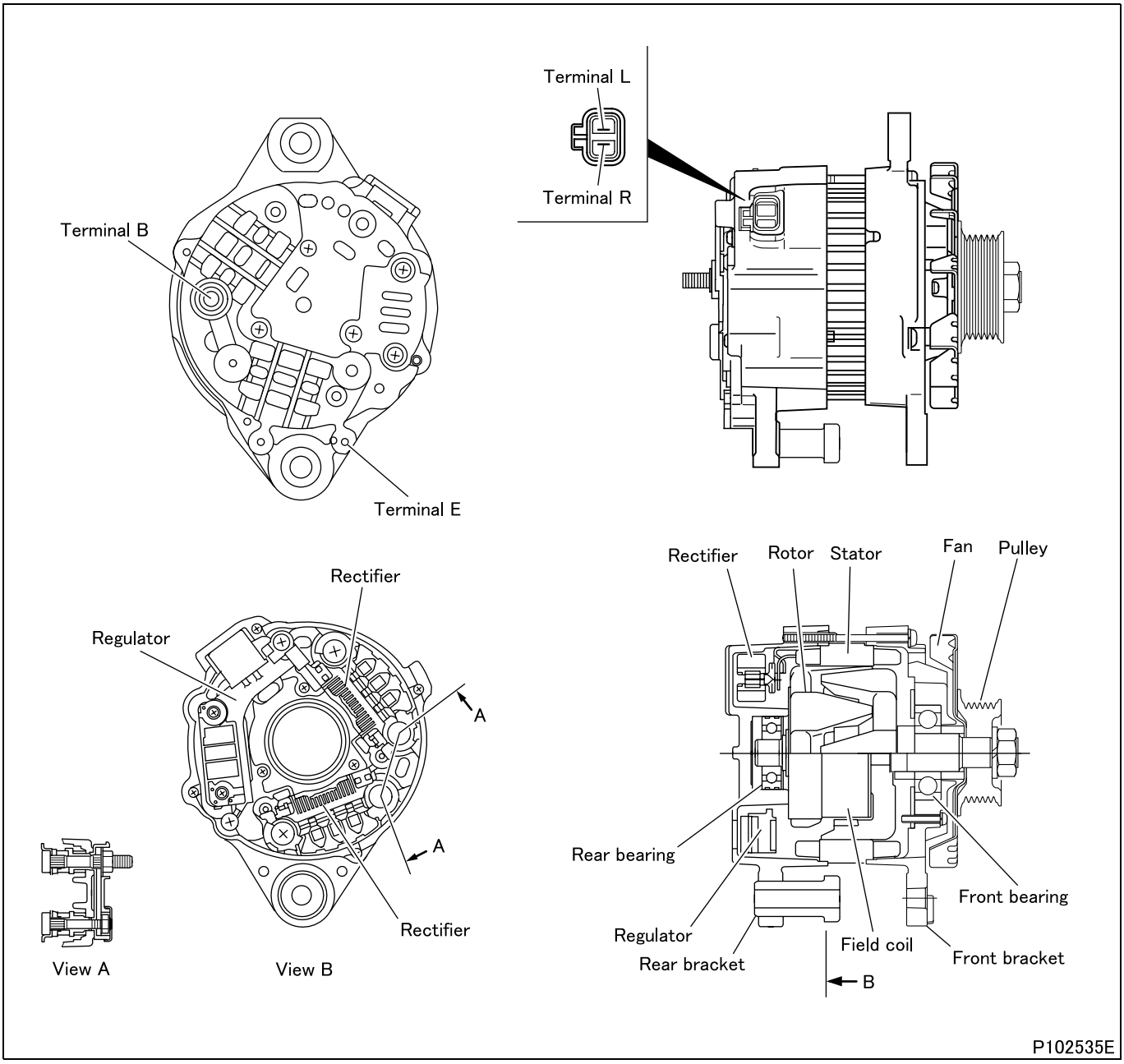

2.1 Alternator with neutral diodes

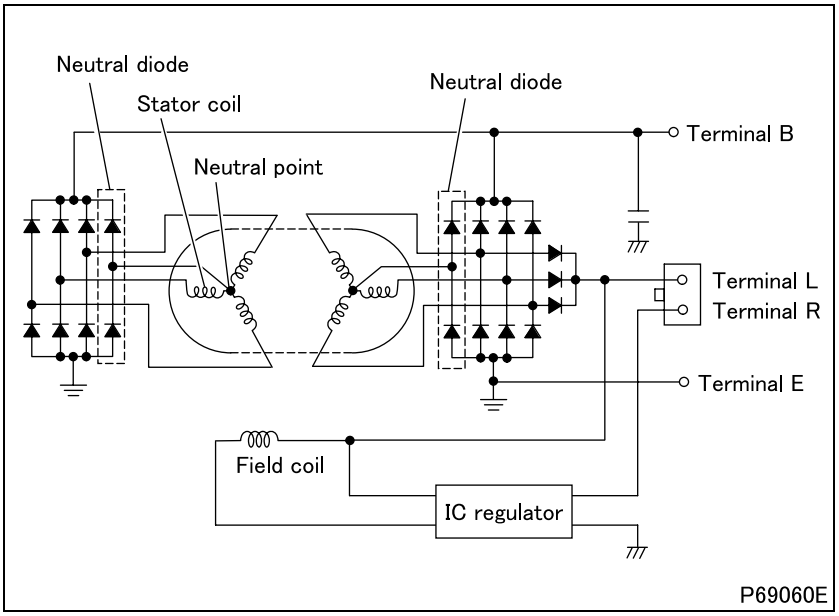

(1) Features

- The alternator is the same as the current alternator except that neutral diodes have been added.
- These neutral diodes enable this alternator to provide higher DC output during operation at high speeds than the alternator without neutral diodes.

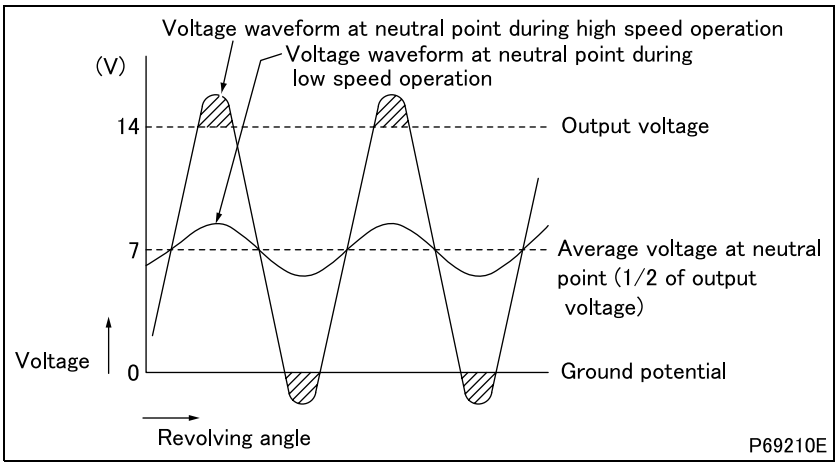

(2) Variations of voltage at neutral point and operation of neutral diodes

- The potential at the neutral point varies up and down with the neutral point DC voltage (1/2 of output voltage) as a center as shown.
- When the alternator is operated at high speeds, the voltage at the neutral point can increase to exceed the output voltage (14V) and decrease to become lower than the ground voltage (0V). To adjust these over-voltage and under-voltage (shaded portions of diagram) the current from the excess voltages is taken by neutral diodes and added to the DC output.

The operation of neutral diodes for each voltage and potential is as follows.

- When the voltage at neutral point is in the range from 0 to 14V, the other six diodes are operated. Neutral diodes are not operated.

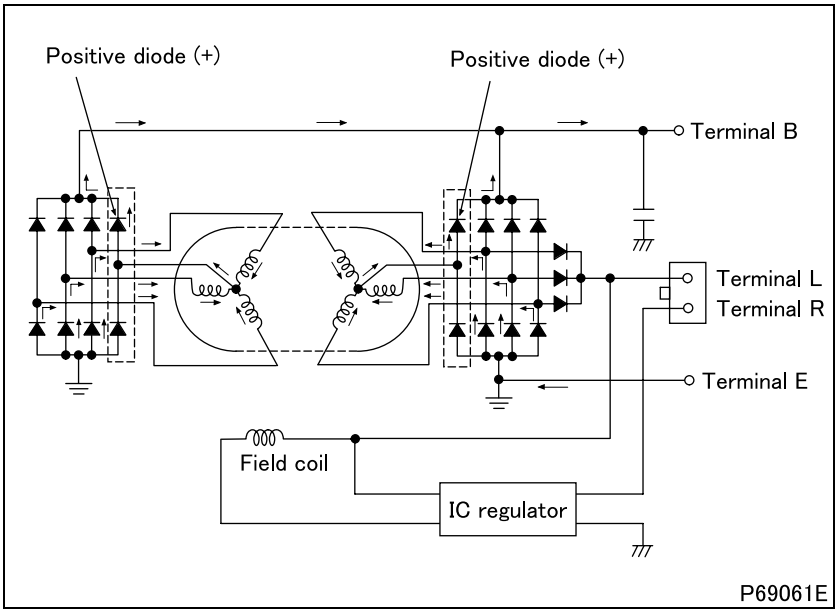

(3) When the voltage at neutral point exceeds 14V

- The positive diode (+) adds extra output to the DC output for supply to each electric equipment.

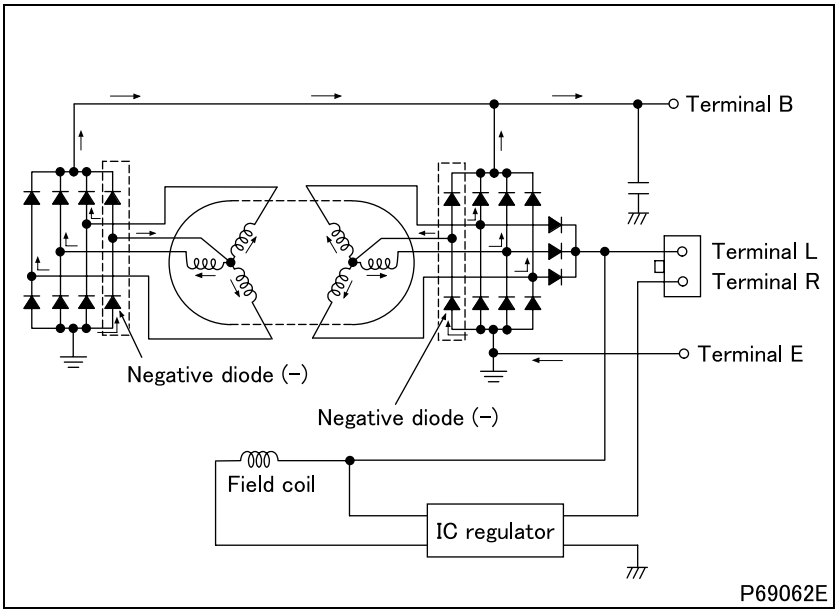

(4) When the voltage at neutral point drops below 0V

- The negative diode (–) supplies the output from neutral point through other three diodes.

3. Headlamps

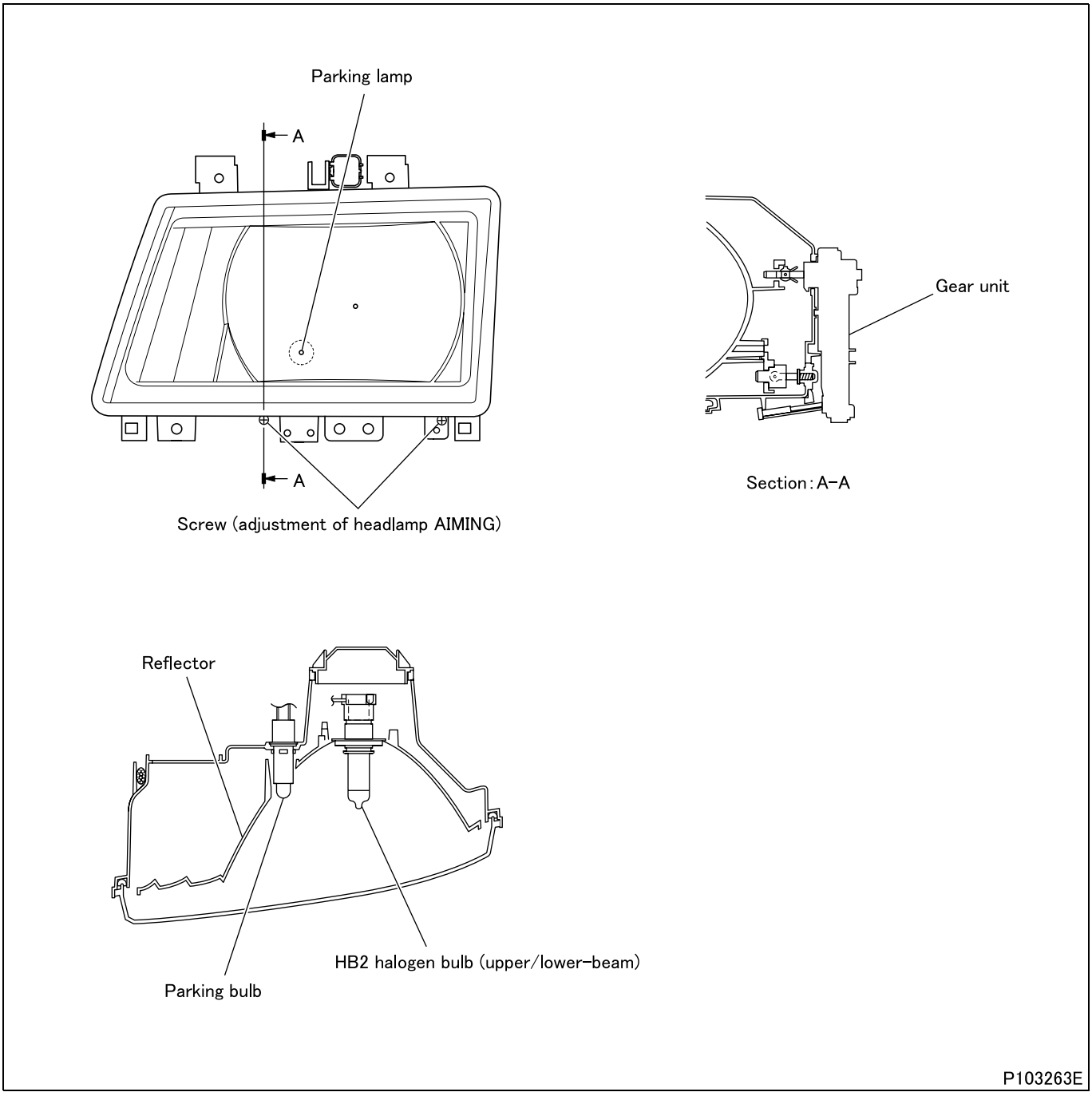

(Left headlamps are shown in this illustration)

4. Meter Cluster

＜Manual transmission＞

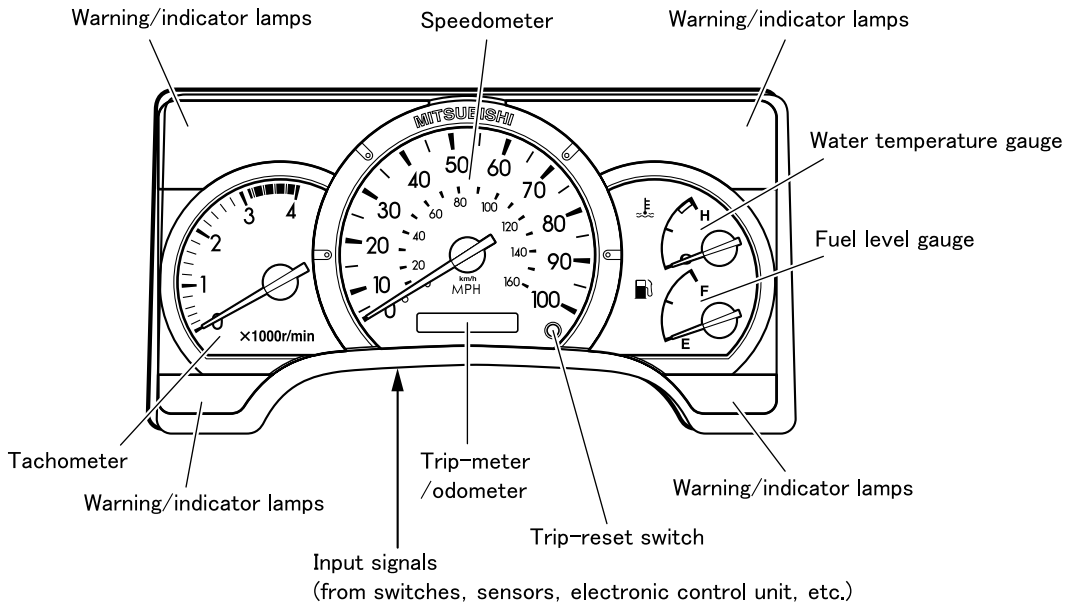

P64157E

＜Automatic transmission＞

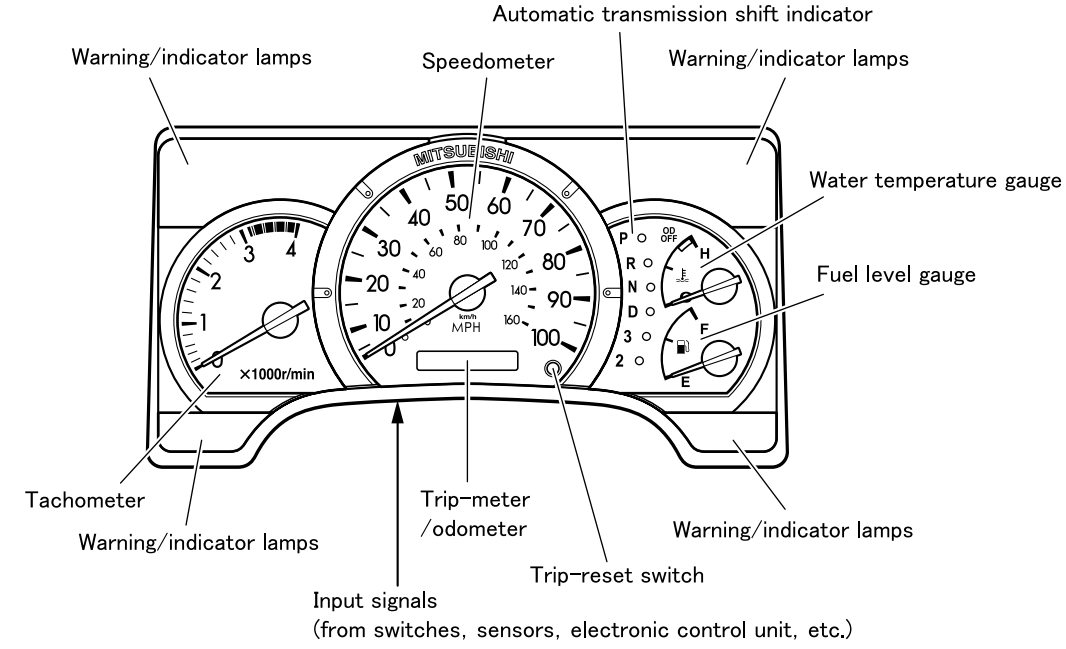

P64158E

- The meter cluster incorporates a CPU, which contains the lighting and alarm control (LAC) function, learning function, and self-diagnosis function.

4.1 Electronic control unit in the meter cluster system block diagram

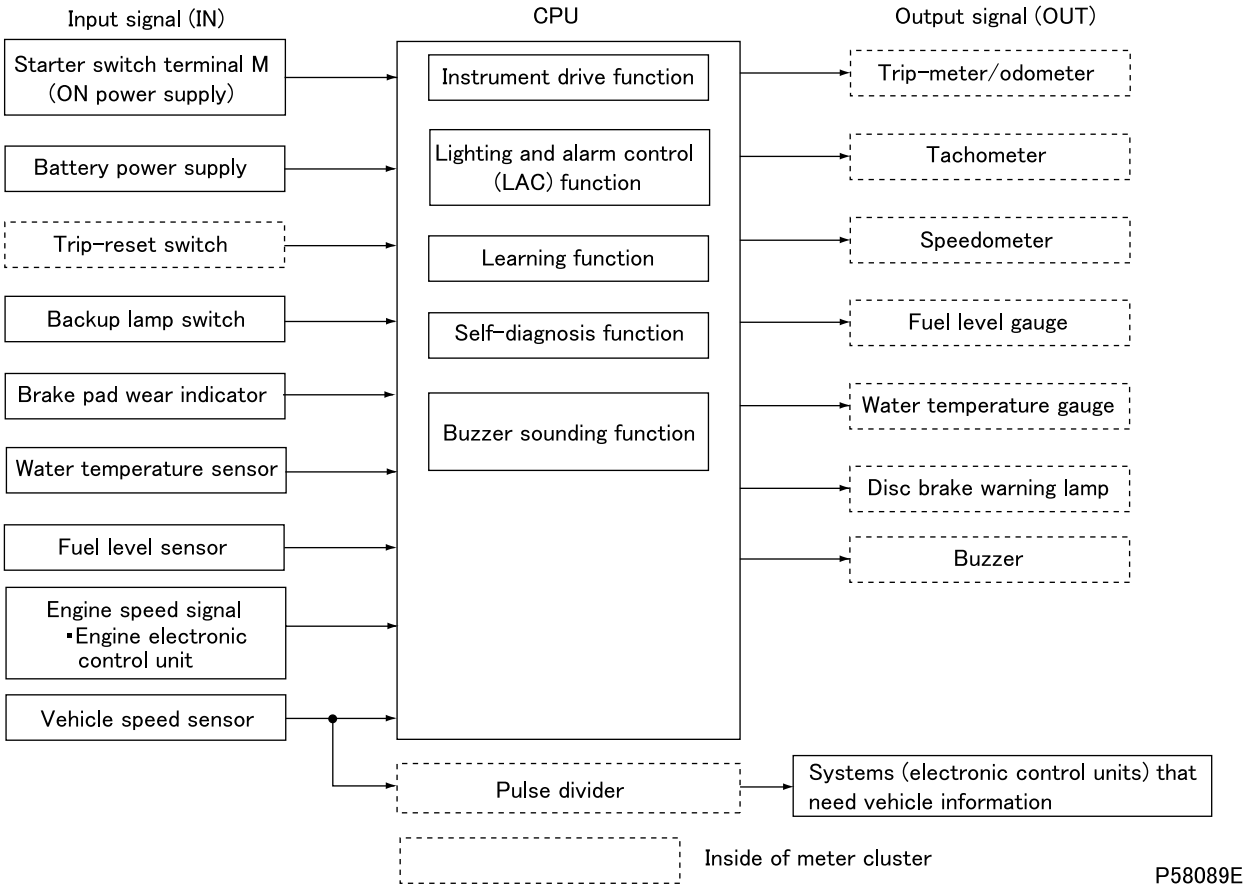

4.2 Instrument drive function

(1) Trip-meter/odometer

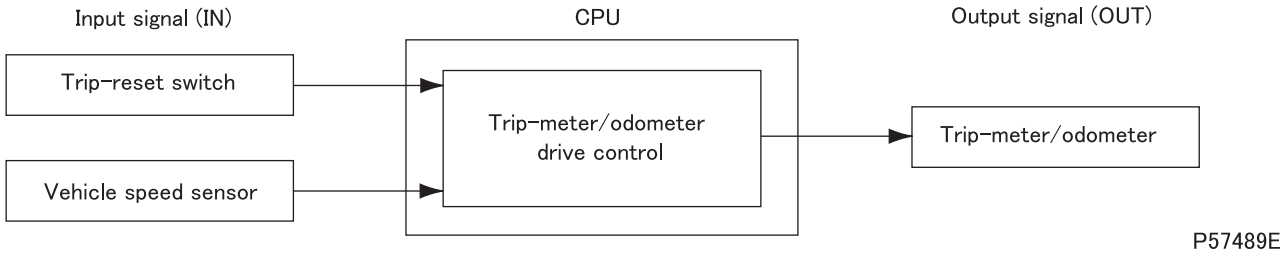

(2) Tachometer

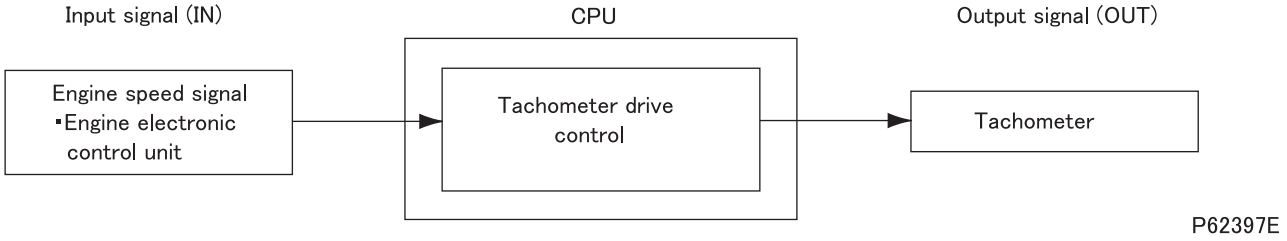

(3) Speedometer

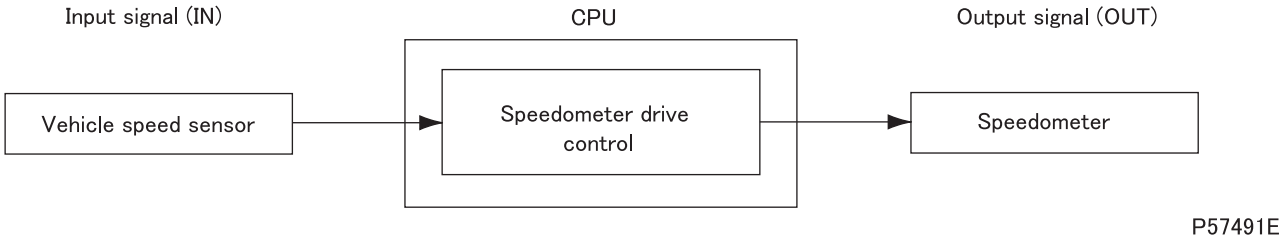

(4) Fuel level gauge

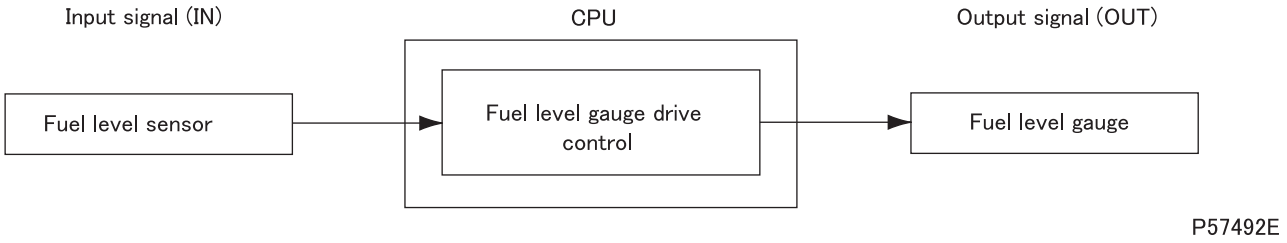

(5) Water temperature gauge

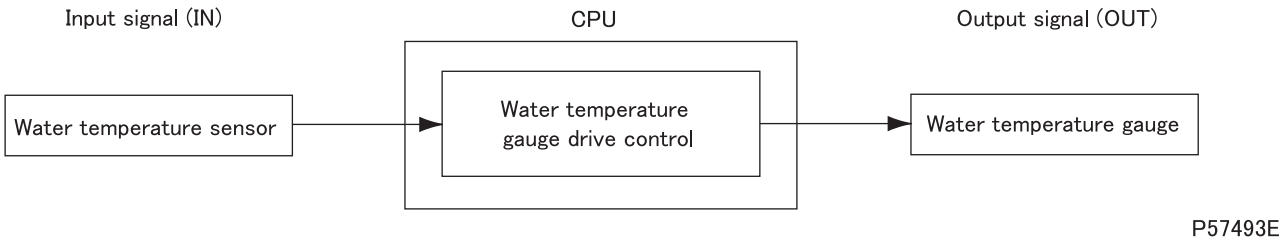

4.3 Lighting and alarm control (LAC) function

(1) Internal structure of LAC

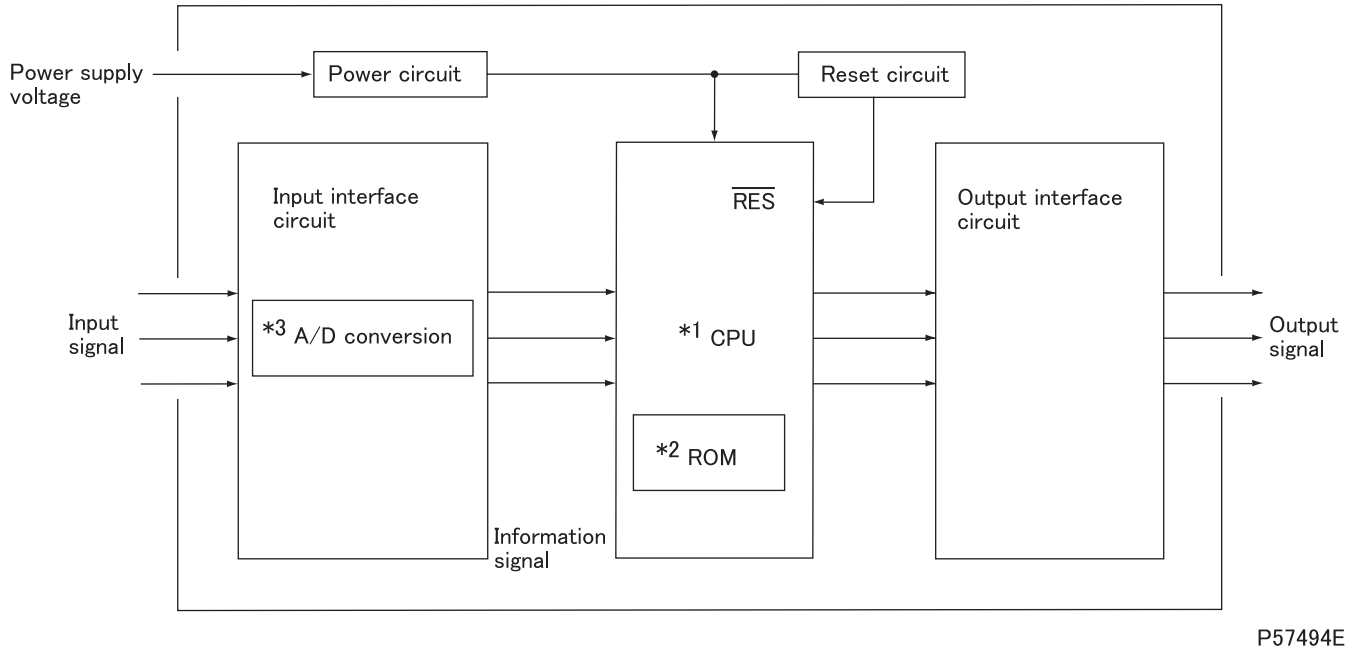

P57494E

- Internally, the LAC is essentially made up of the input interface circuit, *1CPU, *2ROM, and output interface circuit.
  - *1CPU:
    An abbreviation for Central Processing Unit. It compares the input information and the information stored in the ROM, makes a decision and sends commands to the outputs.
  - *2ROM:
    An abbreviation for Read-Only Memory. Its contents are only for reading. It stores fixed data and programs, and such retained information is not deleted even after power is cut off.
- Information sources such as the sensor and switch send input signals to the input interface circuit.
- The input interface circuit performs *3A/D conversion of the input signals, and the converted signals are transmitted to the CPU as information signals.
  - *3A/D conversion:
    An abbreviation for Analog/Digital conversion. It converts analog signals to digital signals. This conversion enables calculation to be made in the CPU.
- The CPU compares the received signals with the data in the ROM, makes a decision, and sends the results to the output interface circuit.
- The output interface circuit transmits these results to each system as output signals to instruct operations.
- Performing these series of operations continuously enables optimum control of each function.

(2) LAC function system block diagram

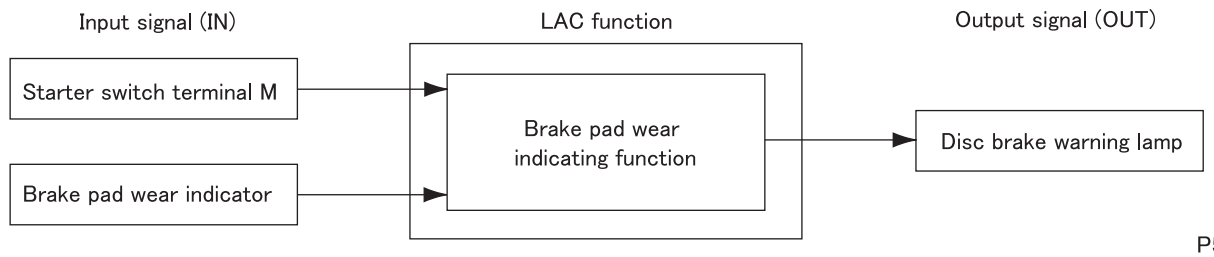

P57495E

(3) Brake pad wear indicating function

- The LAC function determines ON or OFF state of the brake pad wear indicator, and causes the disc brake warning lamp to turn on if necessary.

4.4 Learning function

- The learning function makes the electronic control unit in the meter cluster recognize the specifications of the vehicle, without which the meter cluster cannot provide proper indications.
- There are the following two learning items:
  - "With" or "without" brake pad wear indicator.
  - "With" or "without" clutch disc wear indicator switch.

CAUTION ⚠

- **When making the electronic control unit recognize "with" for the brake pad wear indicator or clutch disc wear indicator switch, make sure that there is no open circuit in any of the relevant brake pad wear indicator or clutch disc wear indicator switch circuits. (If any circuit is found open, replace the corresponding switch.)**

(1) Learning operation

- The learning operation method differs depending on the odometer reading as follows:
  - Less than 3 km (for when the meter cluster is replaced with a new one).
  - 3 km or more (for when re-learning is required due to such a reason as wrong initial learning).

(2) Learning operation for odometer reading of less than 3 km

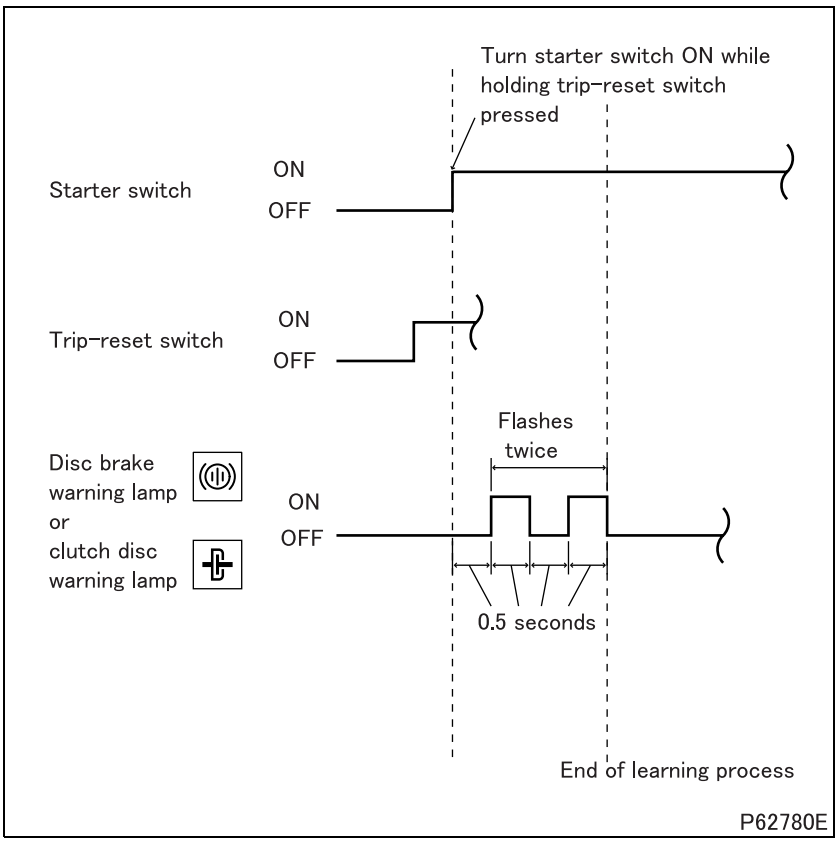

- Turn the starter switch to ON while holding the trip-reset switch pressed, then release the reset switch.
- After 0.5 seconds, the disc brake warning lamp or clutch disc warning lamp will flash twice, indicating completion of the learning process.
- If the vehicle is not equipped with the brake pad wear indicator or clutch disc wear indicator switch, the corresponding warning lamp does not flash.

(3) Learning operation for odometer reading of 3 km or more

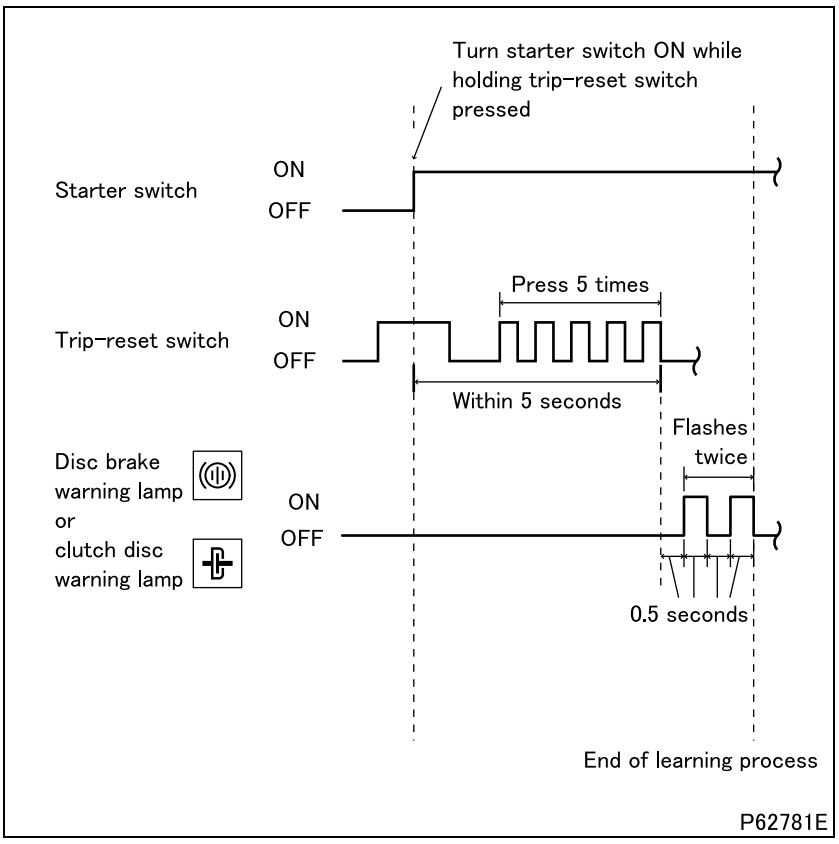

- Turn the starter switch to ON while holding the trip-reset switch pressed, then release the reset switch.
- Within 5 seconds after turning the starter switch to ON, press again the trip-reset switch 5 times.
- After 0.5 seconds, the disc brake warning lamp or clutch disc warning lamp will flash twice, indicating completion of the learning process.
- If the vehicle is not equipped with the brake pad wear indicator or clutch disc wear indicator switch, the corresponding warning lamp does not flash.

(4) Learning result confirmation and open-circuit checking

- After every learning operation, turn the starter switch to OFF and then to ON again to make sure that the indicator lamp for which “equipment” has been learnt illuminates.

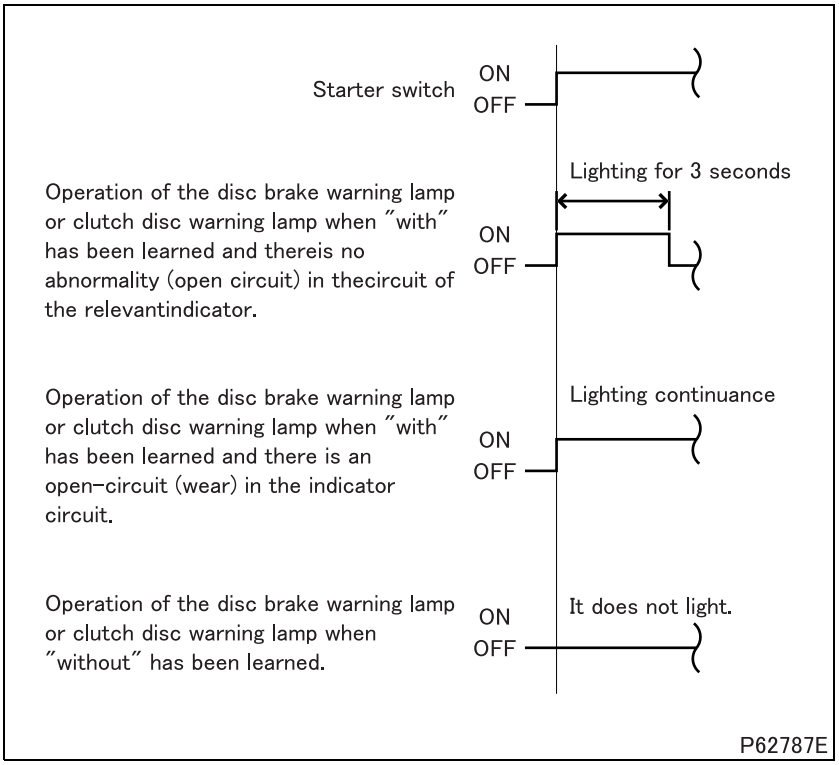

- The open-circuit checking function checks that the indicator lamp(s) for which “equipment” has been learned illuminates normally when the starter switch is turned to ON.

4.5 Self-diagnosis function

- This function is used to check meters in the meter cluster for normal operation when the meter cluster is replaced.

(1) Diagnosis procedure

- If any meter does not function as follows, the meter cluster may be faulty.

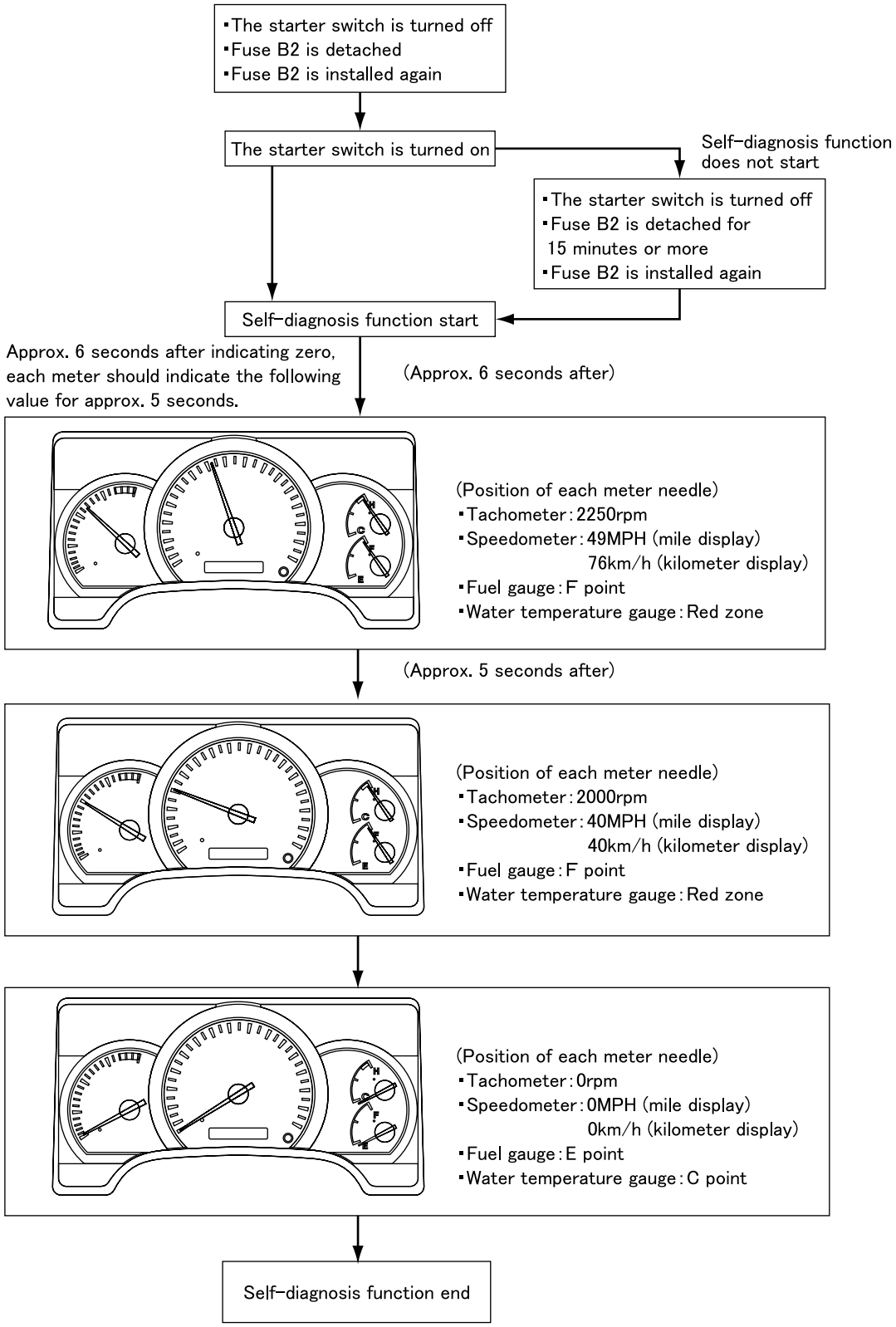

P107068E

4.6 Buzzer sounding function

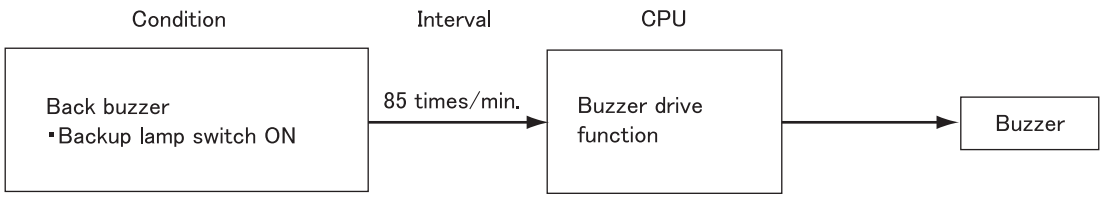

P62494E

M E M O

5. Daytime Running Light System

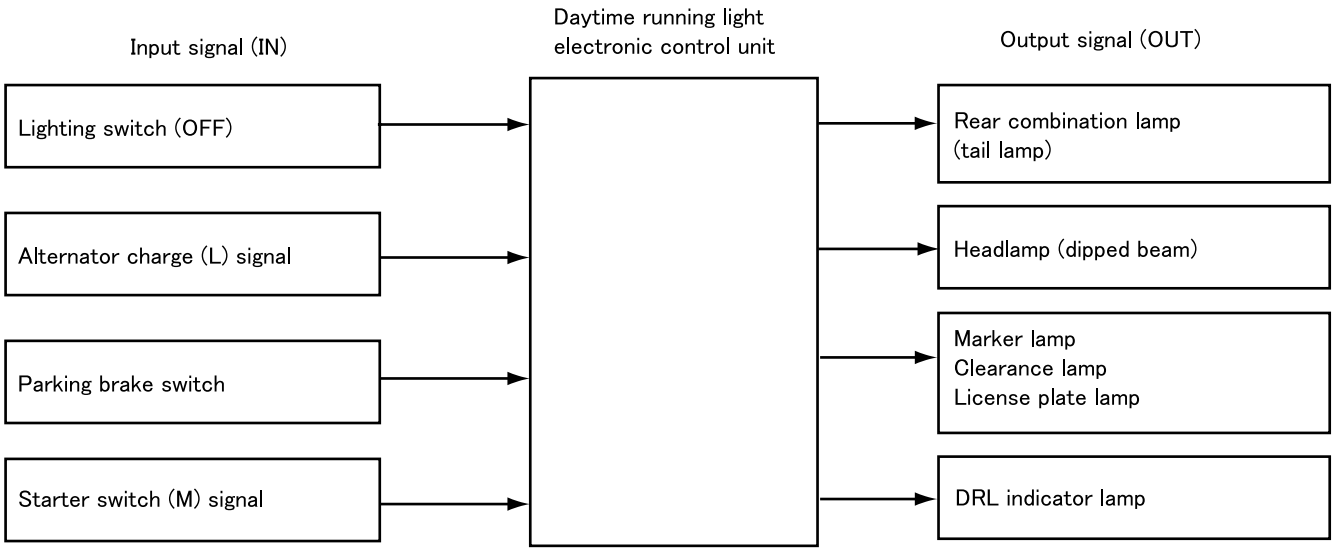

P58722E

- In a daytime running light system, regardless the position of lighting switch while engine is running, the dipped beam of the headlamp and the tail lamp of the rear combinations, position lamp, license plate lamp will light on.
- Except for that the lighting switch is OFF or when the passing switch is ON, the same lamps as usual switch operation will light.

5.1 Timing chart

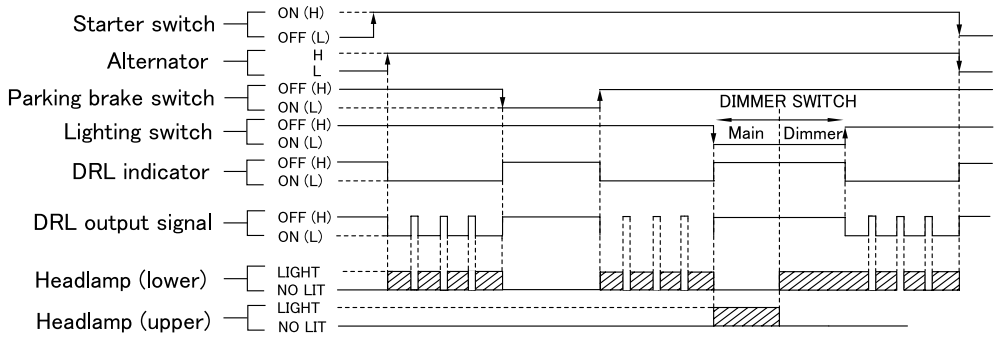

P36413E

Headlamps repeat ON/OFF operations at 120 Hz according to the above timing chart. Because of the cyclic ON/OFF operations, the headlamps are dimmer than when the headlamp switch is ON.
Explanation of timing chart

- After the engine starts, when alternator begins generating electricity with starter switch in the ON position, headlamps light.
- When parking brake switch is ON, the DRL turns off to switch off the headlamps.

5.2 Daytime running light electronic control unit circuit diagram

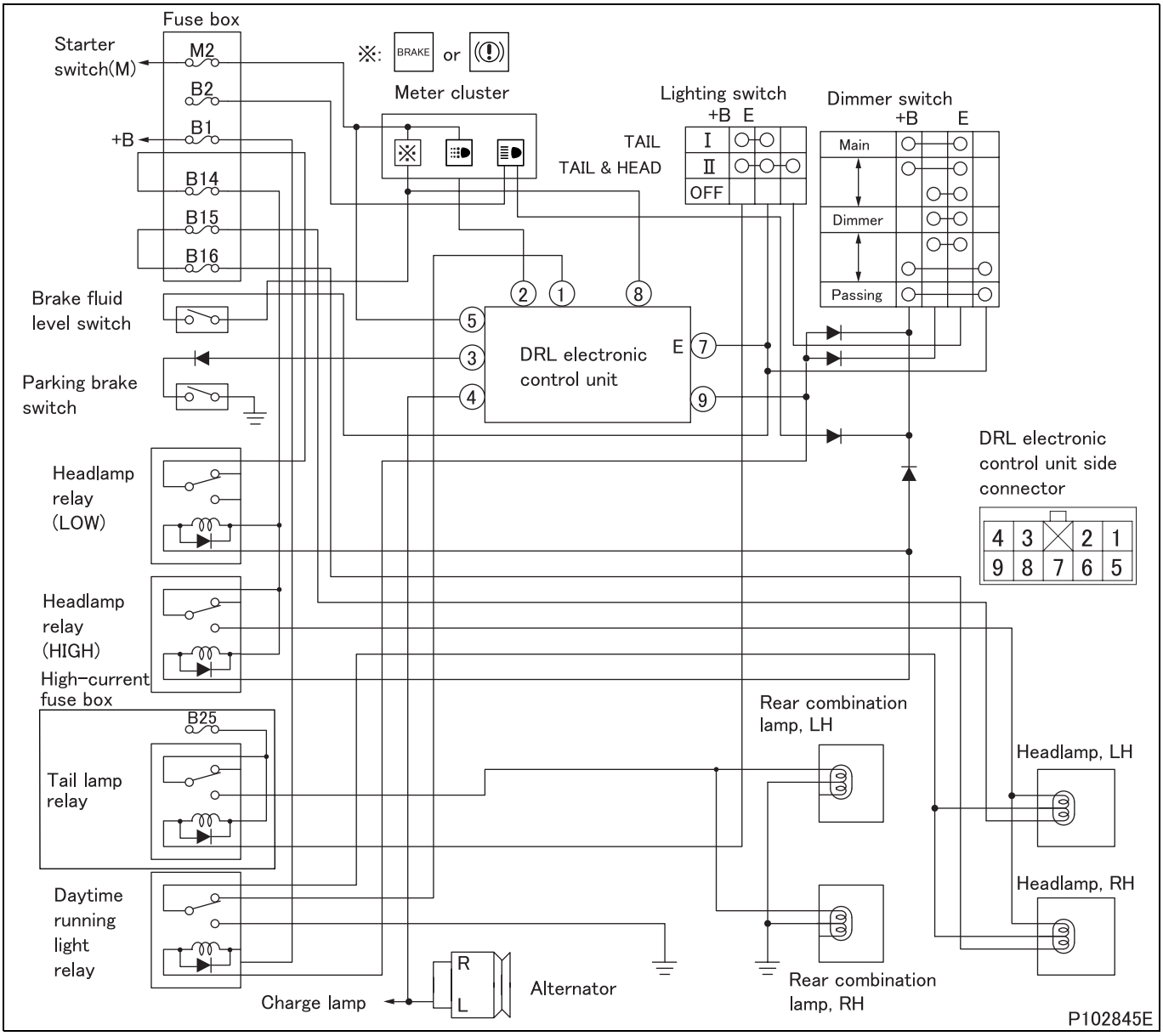

5.3 DRL electronic control unit

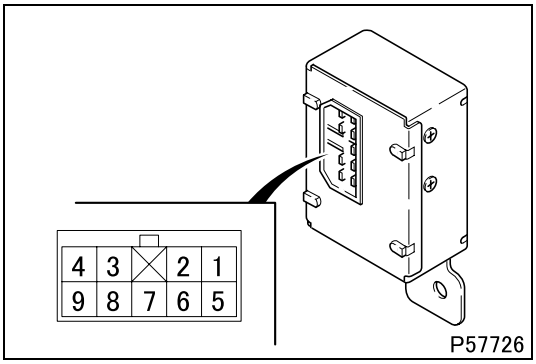

Terminal No.	Connecting destinations	Terminal No.	Connecting destinations
1	Head lamp (dipped)	6	–
2	DRL indicator lamp	7	Ground
3	Parking brake switch	8	Parking brake indicator lamp
4	Alternator L terminal	9	Lighting switch
5	Starter switch M terminal	–	–

6. Wiper Control

6.1 Outline

- This wiper electronic control unit is an integrated control unit controlling the following functions.
  - Windshield washer interlocking wiper-operating function.
  - Intermittent wiper activation function.

(1) System function schematic

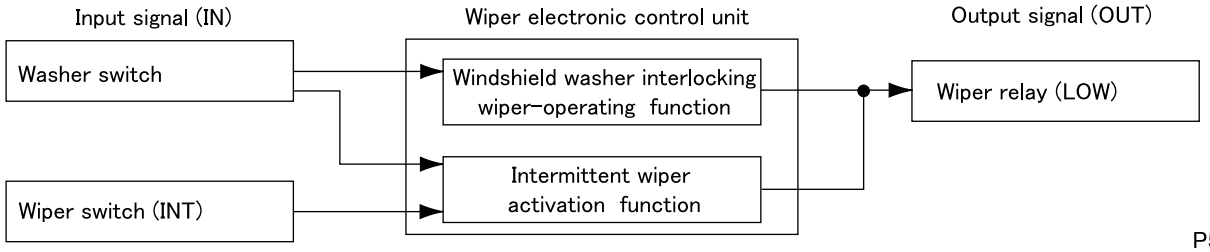

6.2 Windshield washer interlocking wiper-operating function

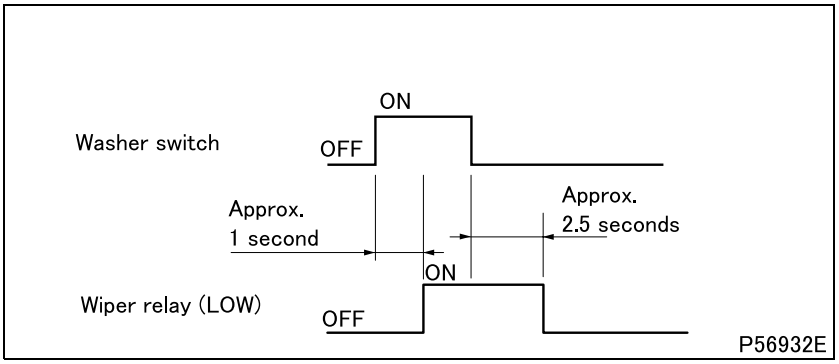

- This function causes the windshield wipers to operate a few times at low speed when the windshield washer switch is turned ON.
- As shown in the drawing, the wiper electronic control unit introduces a short delay between detecting the ON condition of the wiper and washer switch (washer switch) and activating the wiper relay.

6.3 Intermittent wiper activation function

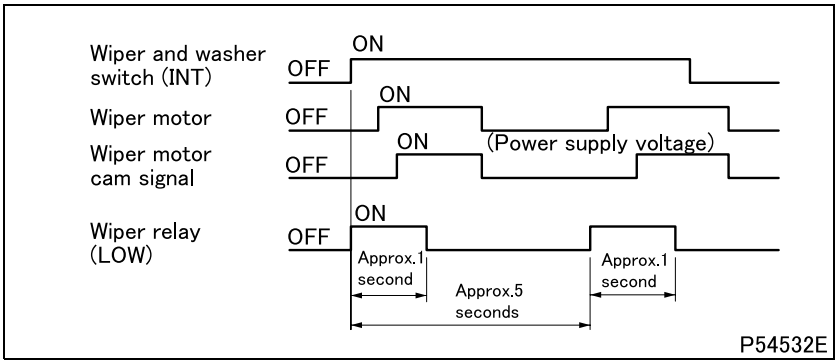

- Wiper electronic control unit causes intermittent wiper operation to take place as shown in the drawing.

6.4 Wiper electronic control unit connection diagram

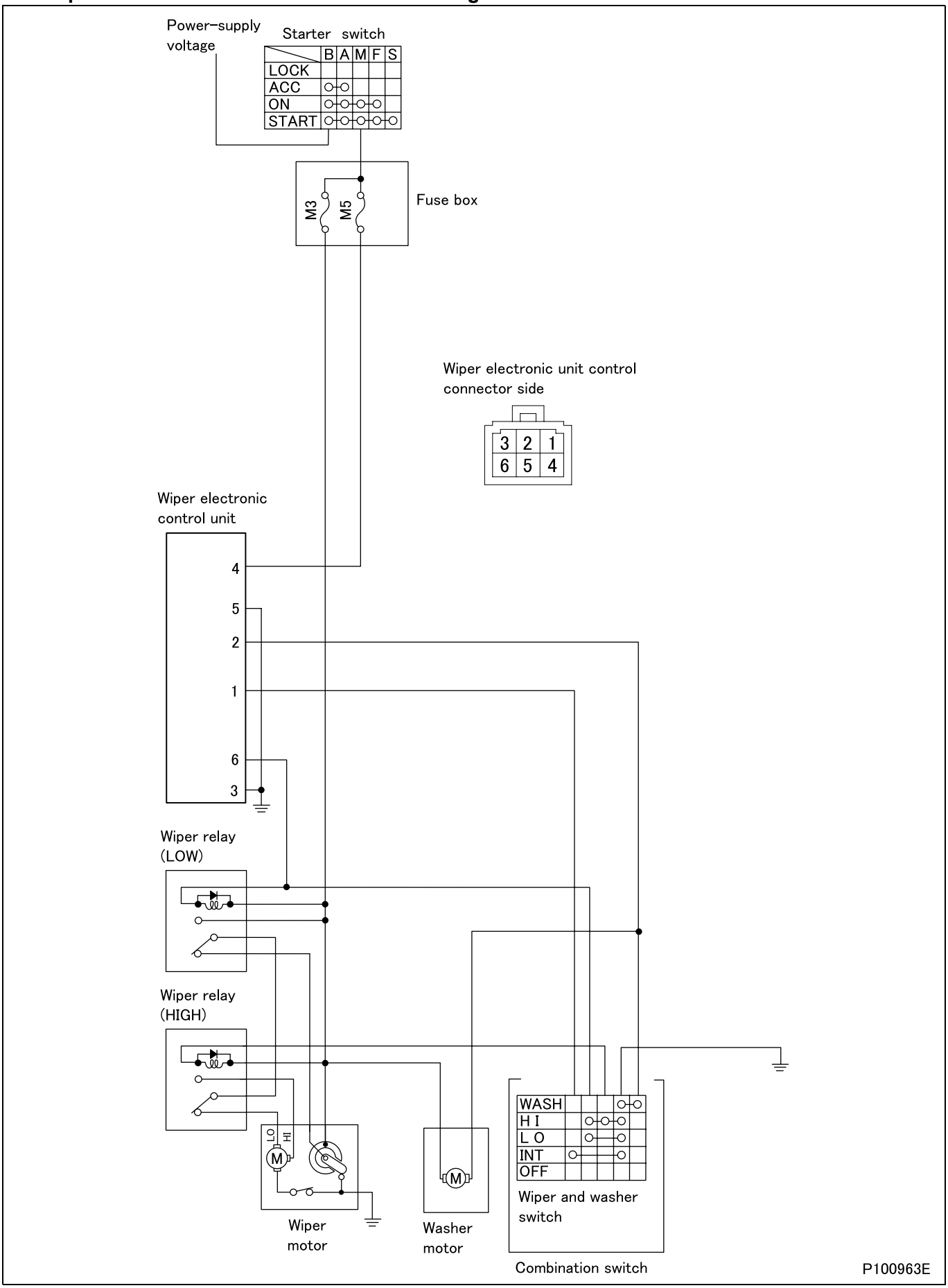

7. Starter Continuous Energizing Preventing Function and Preheating Function

7.1 Outline

- These functions are controlled by the engine electronic control unit.

(1) System function schematic

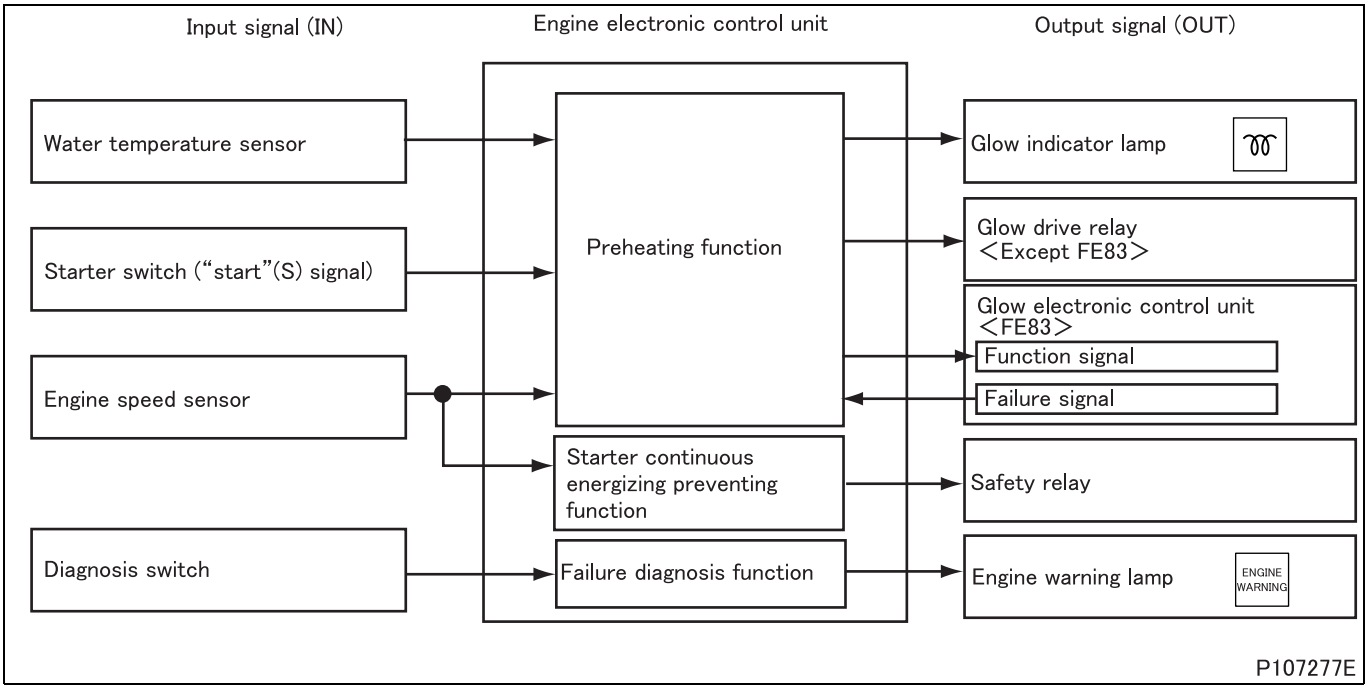

Parts name	Major function and operation
Water temperature sensor	Engine water temperature detection
Starter switch	Start position detection
Engine speed sensor	Engine speed detection
Diagnosis switch	Output of diagnosis code
Engine warning lamp	Abnormality of each function
Safety relay	Release of starter continuous energizing
Glow electronic control unit <FE83>	Fault detection for glow function

7.2 Starter continuous energizing preventing function

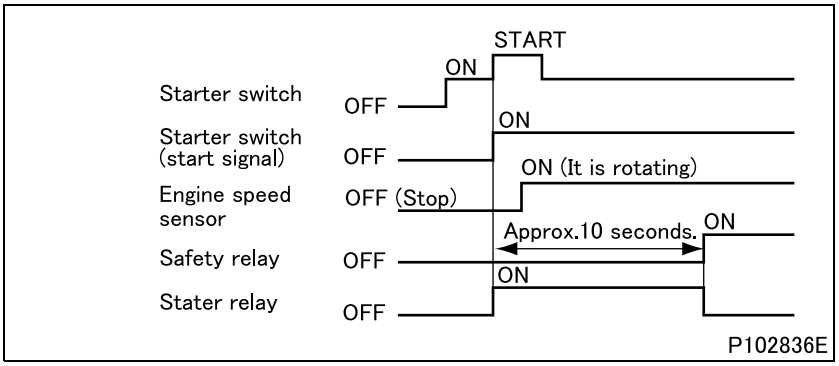

- This function is provided to prevent starter over-run.
- If the starter operates for longer than a predetermined period following engine startup, the Engine electronic control unit deems that it has been energized continuously for too long. The Engine electronic control unit then stops the flow of current to the starter and starter relay, thereby preventing the starter from seizing.

- If the engine electronic control unit determines, based on the engine speed signal it receives, that the engine has run at or above the specified speed for longer than the specified time period after start-up, the unit trips the safety relay open.

7.3 Preheating function

- This preheating function aims to enhance the engine start up when the engine coolant is low in cold weather or temperature.
  Engine electronic control unit the entire function as follows:

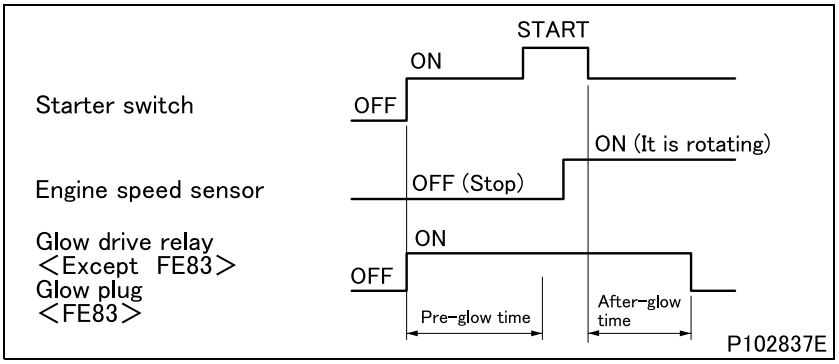

(1) Pre-glow and After-glow

The preheating is operated with a pre-glow before the engine starts and an after-glow after the engine starts. They are controlled by the starter switch (S terminal) signal, engine water temperature signal and the engine speed signal.

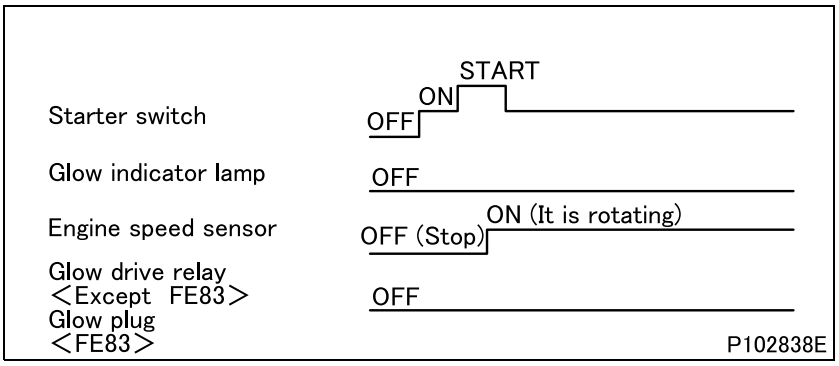

(2) Operation mode

- When the engine coolant temperature is 60°C {140°F} or more.

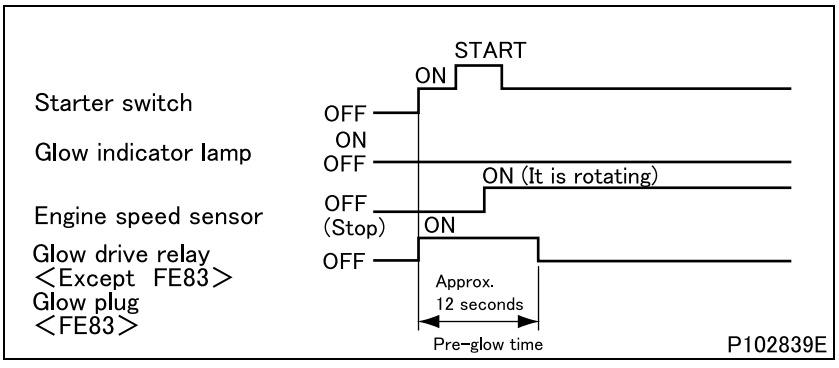

- When the engine coolant temperature is 0 to 60°C {32 to 140°F}.

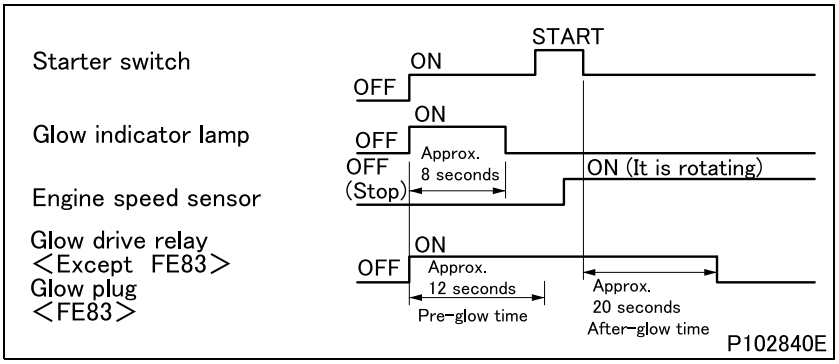

- When the engine coolant temperature is 0°C {32°F} or less.

7.4 Fault diagnosis function

- While the starter switch is in the ON position, the sensors and other components are continuously monitored for faults. In the event that a component is found faulty, an indication is made in the meter cluster to alert the driver, the fault location is memorized in the form of a diagnosis code, and backup control necessitated by the fault is initiated.
- While the backup control is taking place, the system's functionality is limited to ensure vehicle and driver safety. It is possible to read the memorized diagnosis code using a Multi-Use Tester or from flashing of the warning lamp.

NOTE

- **Diagnosis codes shown by the Multi-Use Tester and those indicated by flashing of the warning lamp are different.**
- **The Multi-Use Tester is capable of showing more detailed diagnosis codes.**

54-00D TROUBLESHOOTING

1. Power and Charging

Symptoms / Possible causes		Battery electrolyte decreases too early.	Battery overheating.	Battery is normal but over-discharged.	Charge warning lamp does not light when starter switch is turned ON, with engine stopped.	Alternator is normal but battery over-discharged.	Reference Gr
Connector connection faulty, harness broken, grounding faulty				O		O	
Fuse blown				O	O	O	
Belts loose				O		O	Gr14
Belts damaged				O		O	Gr14
Battery faulty		O				O	
Alternator	Stator coil broken			O			
	Stator coil short-circuited with core			O			
	Field coil broken			O			
	Rectifier faulty			O			
	Regulator faulty		O	O	O		
	Wiring faulty			O			
Meter cluster faulty					O		

2. Engine Starting, Stopping and Preheating

Symptoms / Possible causes		Starter does not operate.	Starter operates but engine does not start			Engine does not stop.	Engine cannot be preheated.	Engine is hard to start.	Engine warm-up function does not operate.	Reference Gr
			Pinion does not engage with ring gear.	Pinion engages with ring gear but does not rotate.	Flywheel rotates but engine does not start.					
Connector connection faulty, harness broken, grounding faulty		O			O	O	O		O	
High-current fuse blown		O								
Fuse blown		O				O	O		O	
Battery voltage insufficient		O		O						
Starter	Magnetic switch contacts stuck or fused together	O								
	Open circuit in magnetic switch coil	O								
	Overrunning clutch malfunctioning			O						
	Pinion worn or damaged		O							
Starter relay faulty		O								
Starter switch faulty		O				O				
Flywheel ring gear worn or damaged			O							Gr11
Glow plugs faulty							O	O		
Glow relay faulty <Except FE83>							O	O		
Glow drive relay faulty <Except FE83>							O	O		
Glow electronic control unit faulty <FE83>							O	O		Gr13E
Safety relay faulty		O								
Water temperature sensor faulty							O	O	O	
Engine electronic control unit faulty		O					O	O	O	Gr13E
Exhaust brake system faulty								O	O	Gr35
Connection plate connection faulty <Except FE83>							O	O		Gr11
Transmission neutral switch faulty <M/T>									O	
Neutral start relay faulty <A/T>		O								
Inhibitor switch faulty <A/T>		O								

A/T: Automatic transmission
M/T: Manual transmission

3. Lighting

Symptoms / Possible causes		Headlamp				Tail lamp does not light.	Stop lamp does not light.	Identification lamp, clearance and side marker lamp	Parking lamp does not light.	License plate lamp does not light.	Backup lamp does not light.	Back buzzer does not sound.	Reference Gr
		Does not light.	Dim.	Does not switch to main beam.	Does not switch to dipped beam.								
Connector connection faulty, harness broken, grounding faulty		O				O	O	O	O	O	O	O	
Fuse blown		O				O	O	O	O	O	O	O	
Battery voltage insufficient			O										
Alternator output insufficient			O										
Bulb burnt-out		O				O	O	O	O	O	O	O	
Combination switch	Lighting switch faulty	O				O		O	O	O		O	
	Dimmer switch faulty			O	O								
Headlamp relay (HIGH, LOW) faulty		O		O	O								
Tail lamp relay faulty						O		O	O	O		O	
Stop lamp relay faulty							O						
Stop lamp switch faulty							O						
Backup lamp switch faulty											O		

Symptoms / Possible causes		Turn signal lamp (serving also as hazard warning lamp)					Cab lamp does not light.	Interior illumination lamps for meters, radio system, etc. do not light.	Reference Gr
		Does not blink.	Stay ON.	Blinks too slowly.	Blinks too quickly.	Blinks irregularly.			
Connector connection faulty, harness broken, grounding faulty		O					O	O	
Fuse blown		O					O		
Battery voltage insufficient			O						
Alternator output insufficient			O						
Bulb burnt-out		O			O		O	O	
Power (wattage) of bulb is lower than specified value					O				
Power (wattage) of bulb is higher than specified value				O					
Combination switch	Lighting switch faulty							O	
	Turn signal lamp switch faulty	O							
Tail lamp relay faulty								O	
Turn signal lamp relay faulty		O							
Flasher unit faulty		O	O	O	O	O			
Cab lamp switch faulty							O		
Cab lamp faulty							O		
Door switch faulty							O		
Hazard warning lamp switch faulty		O	O						
Rheostat switch faulty								O	

Symptoms / Possible causes		Van body dome light does not light.	Daytime running light system does not operate after engine starts, and headlamps do not light.	Reference Gr
Connector connection faulty, harness broken, grounding faulty		O	O	
Fuse blown		O		
Bulb burnt-out		O		
Combination switch	Lighting switch faulty	O		
Relay box	Headlamp relay (HIGH, LOW) faulty		O	
	Tail lamp relay faulty		O	
	Daytime running light relay		O	
Van body dome light relay faulty		O		
Van body dome light switch faulty		O		
Daytime running light electronic control unit faulty			O	

4. Meter

Symptoms / Possible causes		Pointer does not move.	Pointer movement unstable.	Indication error large.	Abnormal noise from meter.	Reference Gr
Connector connection faulty, harness broken, grounding faulty		O	O			
Fuse blown		O				
Internal circuits of meter cluster faulty		O	O	O		
Printed wiring board of meter cluster faulty		O				
Tachometer	Engine speed sensor coil open-circuited	O				
	Engine speed sensor improperly mounted	O	O			
	Tachometer faulty	O	O	O	O	
Speedometer	Vehicle speed sensor faulty	O				
	Vehicle speed sensor improperly mounted		O			
	Specified tires not used			O		Gr31
	Tires worn or inflation pressure incorrect			O		Gr31
	Specified L-joint of transmission not used (difference in gear ratio)			O		Gr22
	Specified speedometer gear of transmission not used (difference in gear ratio)			O		Gr22
	Installation angle of speedometer gear bushing on transmission incorrect (not set at correct gear ratio position)			O		Gr22
	Speedometer faulty	O	O	O	O	
Water temperature gauge	Water temperature sensor faulty	O		O		
	Water temperature gauge faulty	O		O		
	Thermostat does not close	O				Gr14
Fuel gauge	Fuel level sensor faulty	O		O		
	Fuel gauge faulty	O		O		

5. Cigarette Lighter and Audio

Symtoms / Possible causes	Cigarette lighter			Audio	Reference Gr
	Does not glow.	Does not return.	Night lamp does not light up.	Radio does not work.	
Connector connection faulty, harness disconnection, grounding faulty	O		O	O	
Fuse blown	O		O	O	
Cigarette lighter faulty	O	O			
Tail lamp relay faulty			O		
Antenna and antenna cable connection faulty				O	
Radio amplifier faulty				O	
Radio tuner faulty				O	
Speaker faulty				O	

Accessory Noise Generation Source

Accessory	Noise	Symptoms
Alternator	Whistling	High pitch sound when accelerator pedal suddenly pressed (Stops soon after engine stopped)
Water temperature gauge	Scratching	Occurs when engine running (Continues for a while after engine stops)
Engine oil pressure switch	Rattling	Depends on engine speed (Does not occur during idling)
Fuel level sensor	Scratching	Occurs when engine suddenly revved, while running on rough roads, or starter switch turned ON
Flasher unit	Banging	When turn signal blinks
Horn	Hissing	Occurs when horn button pressed or released
Wiper motor	Whining	Depends on windshield wiper speed
Washer motor	Whining	When windshield washer operates

6. Horn

Symptoms / Possible causes	Horn				Reference Gr
	No sound	Continuous sound	Small sound	Sound quality poor	
Connector connection faulty, harness disconnection, grounding faulty	O				
Fuse blown	O				
Horn switch faulty	O	O			
Horn faulty	O		O	O	
Horn stay warped			O	O	
Battery voltage insufficient	O		O		

54-01 POWER, CHARGE AND GROUND CIRCUIT

HIGH-CURRENT FUSE BOX

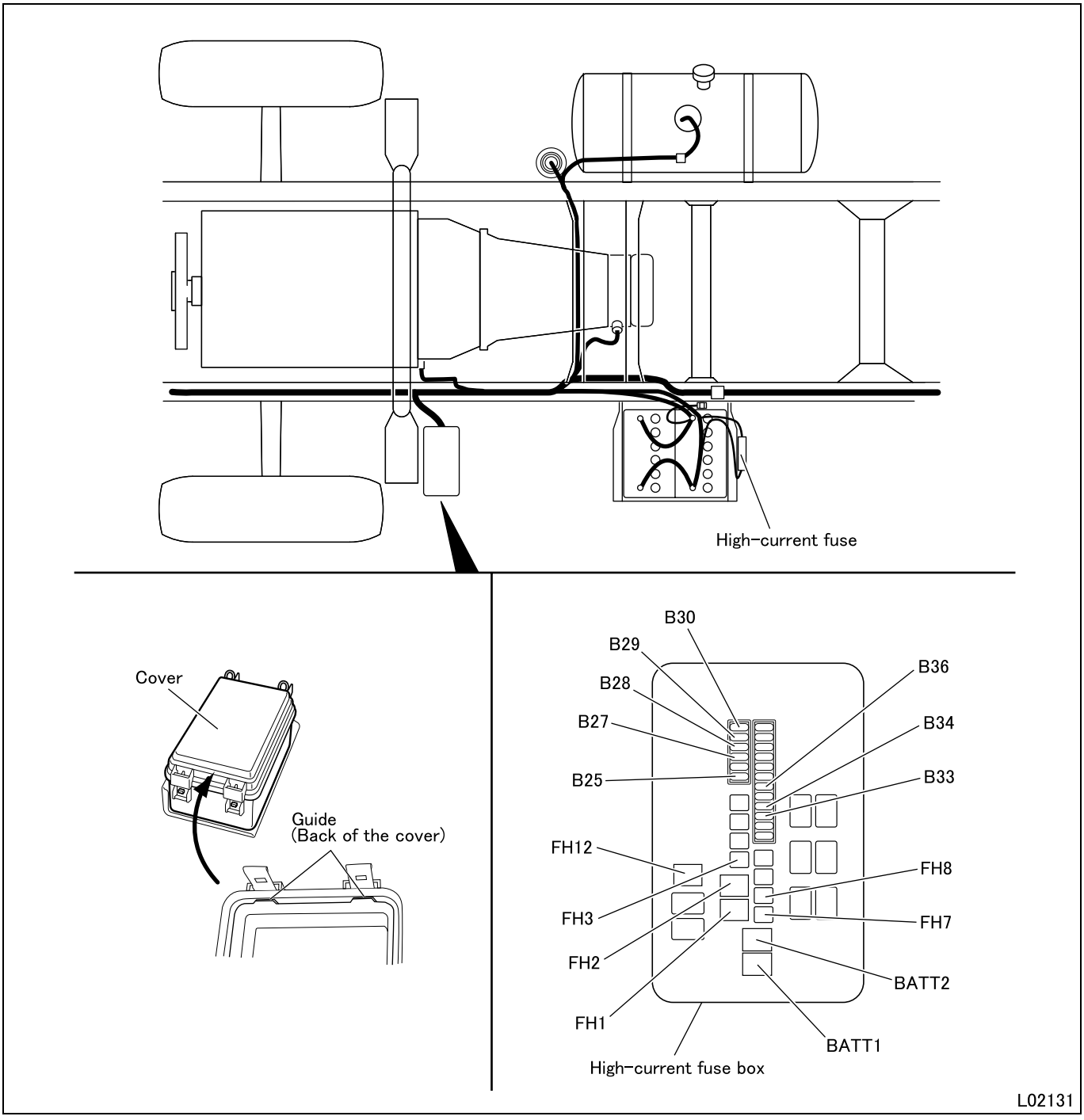

WARNING ⚠

- **To prevent possible injury, be sure to disconnect the negative (–) cable of the battery and insulate it with tape before removing high-current fuses.**

CAUTION ⚠

- **With the negative (–) cable of the battery connected, some high-current fuses are always under battery voltage. An arc will be generated when any of these high-current fuses is replaced without disconnecting the battery negative cable, and this could cause the related electric devices to be damaged.**
- **If a fuse blows out, identify and remedy the cause, then replace the fuse.**
- **Be sure to use the fuse with the specified ampere.**
- **When installing the cover on the high-current fuse box, lightly press the cover directly down until the guide on the cover securely fits in the guide on the fuse box. Do not push the cover inward with excessive force, as doing so could easily damage the guides.**

High-current fuse

Main load	Capacity
Alternator (terminal B)	120A

High-current fuse box

Fuse No.	Main load	Capacity
FH1	Fuse box (S1, A1 to A5, M1 to M12)	60A
FH2	Fuse box (B1 to B12)	60A
FH3	Fuse box (B13 to B16)	40A
FH7	ABS motor	40A
FH8	ABS solenoid	40A
FH12	Hydraulic booster	60A
B25	Tail lamp	15A
B27	Horn	10A
B28	Air-conditioner	10A
B29	Condenser fan	25A
B30	Blower fan	30A
B33	Van body dome light	10A
B34	ATF cooler fan	20A
B36	Engine electronic drive unit	20A
BATT1	Alternator	120A
BATT2	Glow	60A

ABS: Anti-lock brake system
ATF: Automatic transmission fluid

FUSE BOX

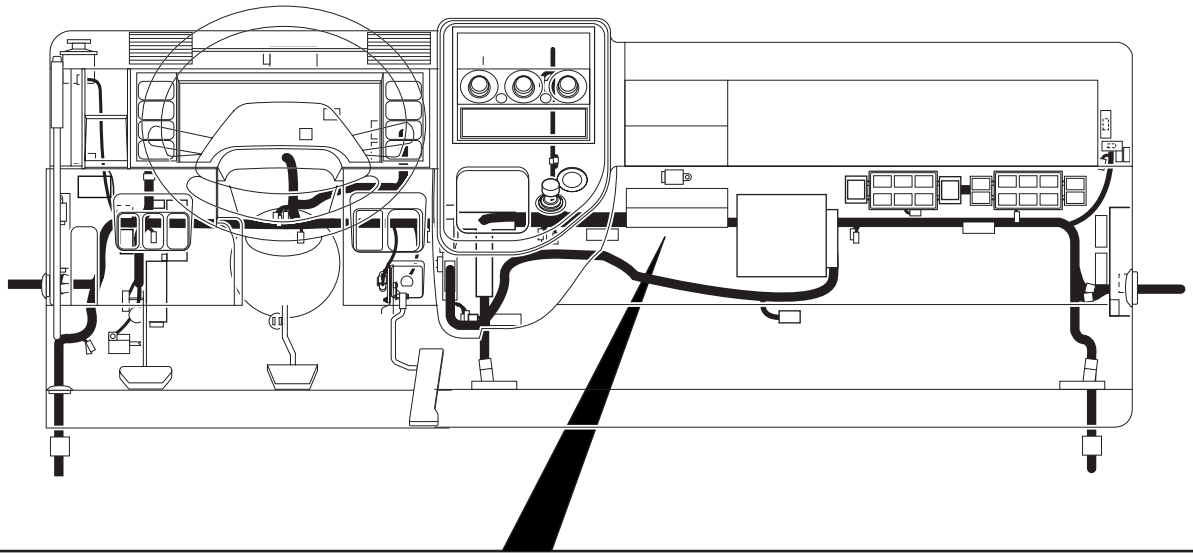

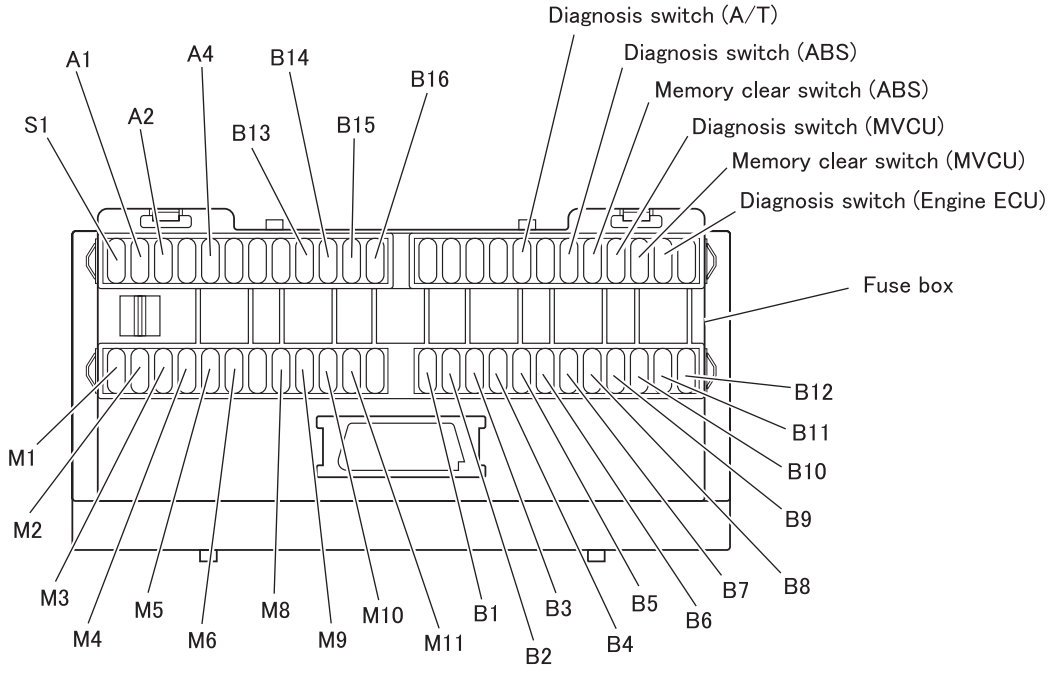

ECU : Electronic control unit
A/T : Automatic transmission
MVCU : Multifunction vehicle control unit

L03343

WARNING ⚠

- **To prevent possible injury, be sure to disconnect the negative (–) cable of the battery and insulate it with tape before removing high-current fuses.**

CAUTION ⚠

- **With the negative (–) cable of the battery connected, some high-current fuses are always under battery voltage. An arc will be generated when any of these high-current fuses is replaced without disconnecting the battery negative cable, and this could cause the related electric devices to be damaged.**
- **If a fuse blows out, identify and remedy the cause, then replace the fuse.**
- **Be sure to use the fuse with the specified ampere.**

Fuse box

Fuse No.	Main load	Capacity
A1	Cigarette lighter	15A
A2	Audio	10A
A4	Opt (ACC)	10A
B1	Stop lamp	15A
B2	Meter	10A
B3	Turn signal lamp	15A
B4	Opt (B)	10A
B5	Audio	10A
B6	Cab lamp	10A
B7	Power window (driver)	30A
B8	Power window (assistant)	30A
B9	Engine electronic control unit	20A
B10	MVCU	10A
B11	Mirror heater	20A
B12	Automatic transmission	10A
B13	Tester	15A
B14	Headlamp (HI)	20A
B15	Headlamp, LH (LO)	20A
B16	Headlamp, RH (LO)	20A
M1	Backup lamp	10A
M2	Meter	10A
M3	Wiper	15A
M4	Opt (M)	10A
M5	Relay control	10A
M6	Automatic transmission	10A
M8	Exhaust brake	10A
M9	Engine electronic control unit	5A
M10	MVCU	10A
M11	ABS	10A
S1	Starter	10A

Diagnosis fuse

Fuse No.	Main load	Capacity
A/T	Diagnosis switch	5A
ABS	Diagnosis switch	5A
ABS	Memory clear switch	10A
MVCU	Diagnosis switch	5A
MVCU	Memory clear switch	10A
Engine ECU	Diagnosis switch	5A

ABS: Anti-lock brake system
A/T: Automatic transmission
ECU: Electronic control unit
MVCU: Multifunction vehicle control unit

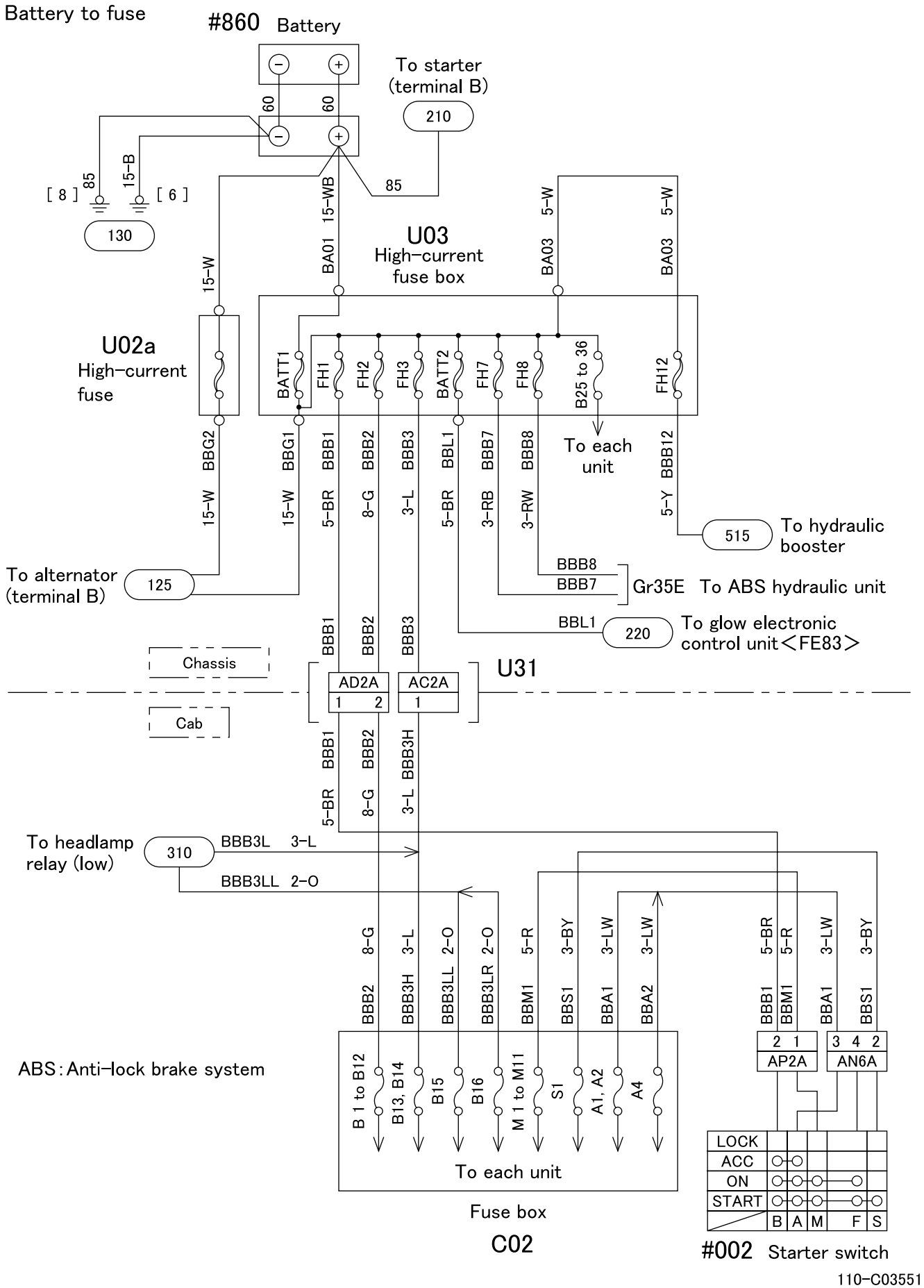
Battery to fuse
#860 Battery
To starter (terminal B)
210
60
60
85
15-B
[8]
[6]
130
15-WB
BA01
U03
High-current fuse box
BA03
5-W
BA03
5-W
15-W
U02a
High-current fuse
BATT1
FH1
FH2
FH3
BATT2
FH7
FH8
B25 to 36
FH12
To each unit
BBG2
BBG1
BBB1
BBB2
BBB3
BBL1
BBB7
BBB8
BBB12
15-W
15-W
5-BR
8-G
3-L
5-BR
3-RB
3-RW
5-Y
515
To hydraulic booster
To alternator (terminal B)
125
BBB8
BBB7
Gr35E
To ABS hydraulic unit
BBL1
220
To glow electronic control unit<FE83>
BBB1
BBB2
BBB3
Chassis
Cab
AD2A
1 2
AC2A
1
U31
BBB1
BBB2
BBB3H
5-BR
8-G
3-L
To headlamp relay (low)
310
BBB3L 3-L
BBB3LL 2-O
8-G
3-L
2-O
2-O
5-R
3-BY
3-LW
3-LW
5-BR
5-R
3-LW
3-BY
BBB2
BBB3H
BBB3LL
BBB3LR
BBM1
BBS1
BBA1
BBA2
BBB1
BBM1
BBA1
BBS1
ABS : Anti-lock brake system
B 1 to B12
B13, B14
B15
B16
M 1 to M11
S1
A1, A2
A4
To each unit
Fuse box
C02
2 1
AP2A
3 4 2
AN6A
LOCK
ACC
ON
START
B A M F S
#002 Starter switch

110-C03551

M E M O

High-current fuse box
(Fuse B25)

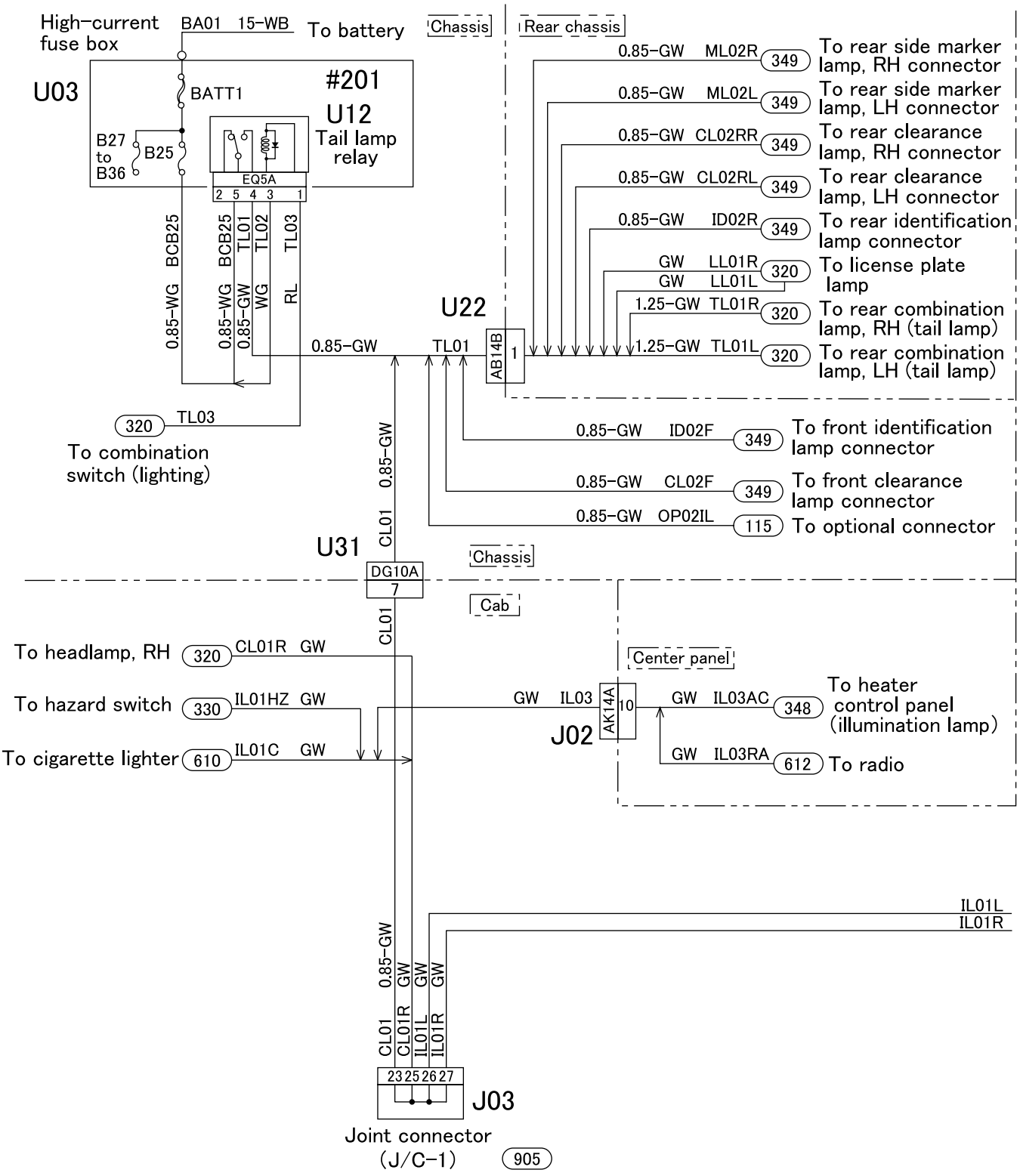

110-C04829-1

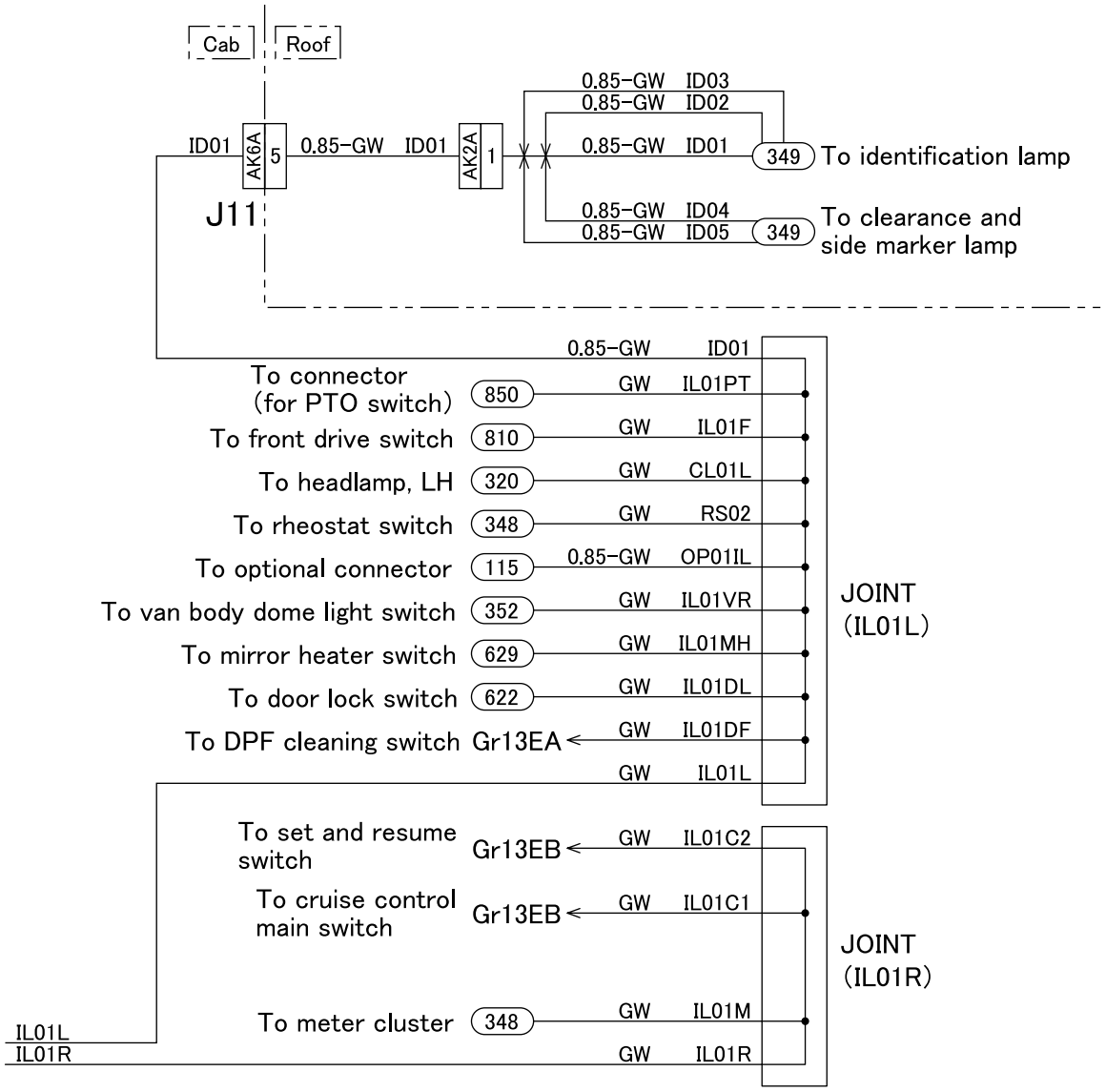

DPF : Diesel particulate filter

PTO : Power take-off

High-current fuse box
(Fuse B27 to B36)

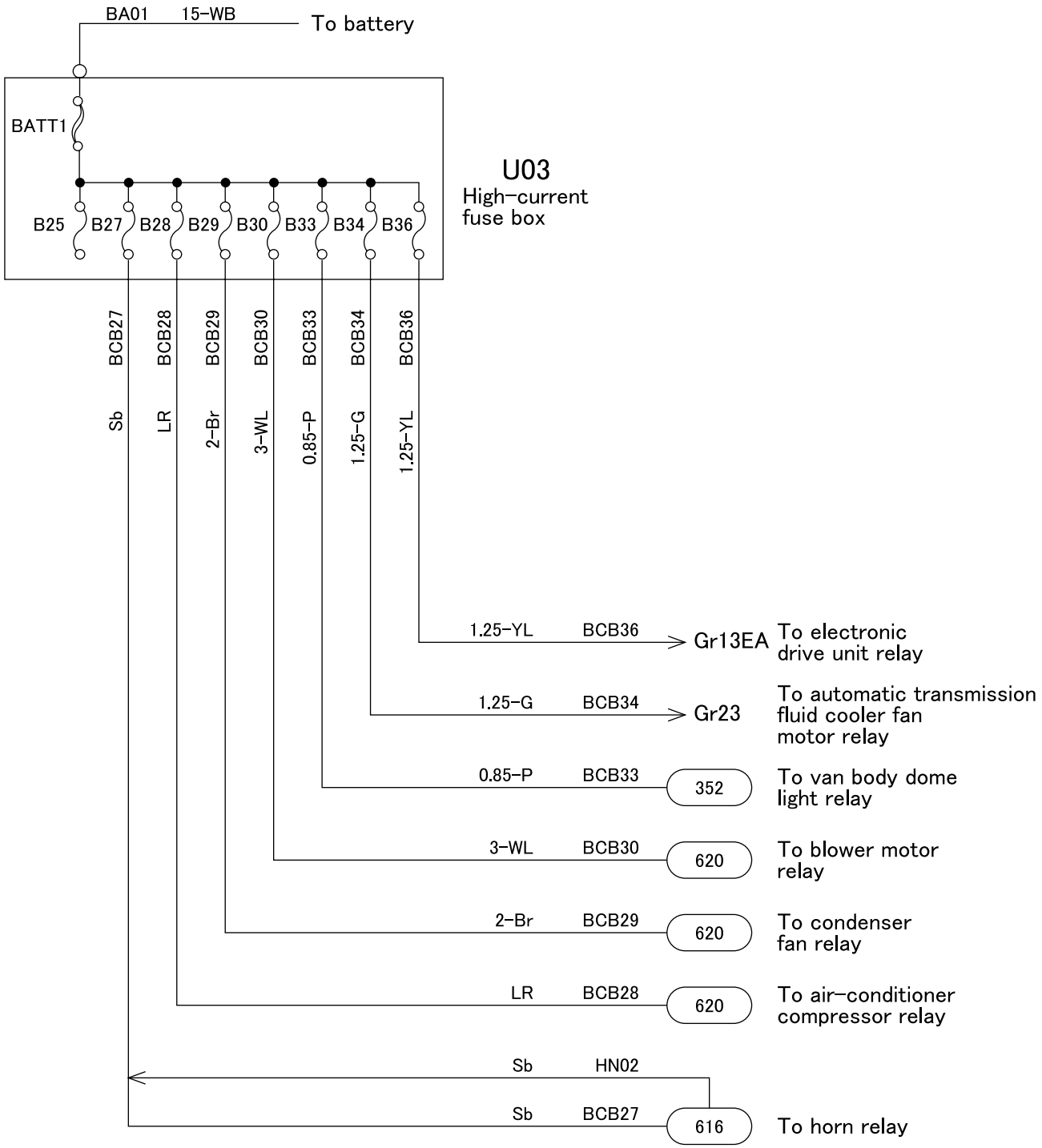

110-C03553

Fuse box
(Fuse A1 to A4)

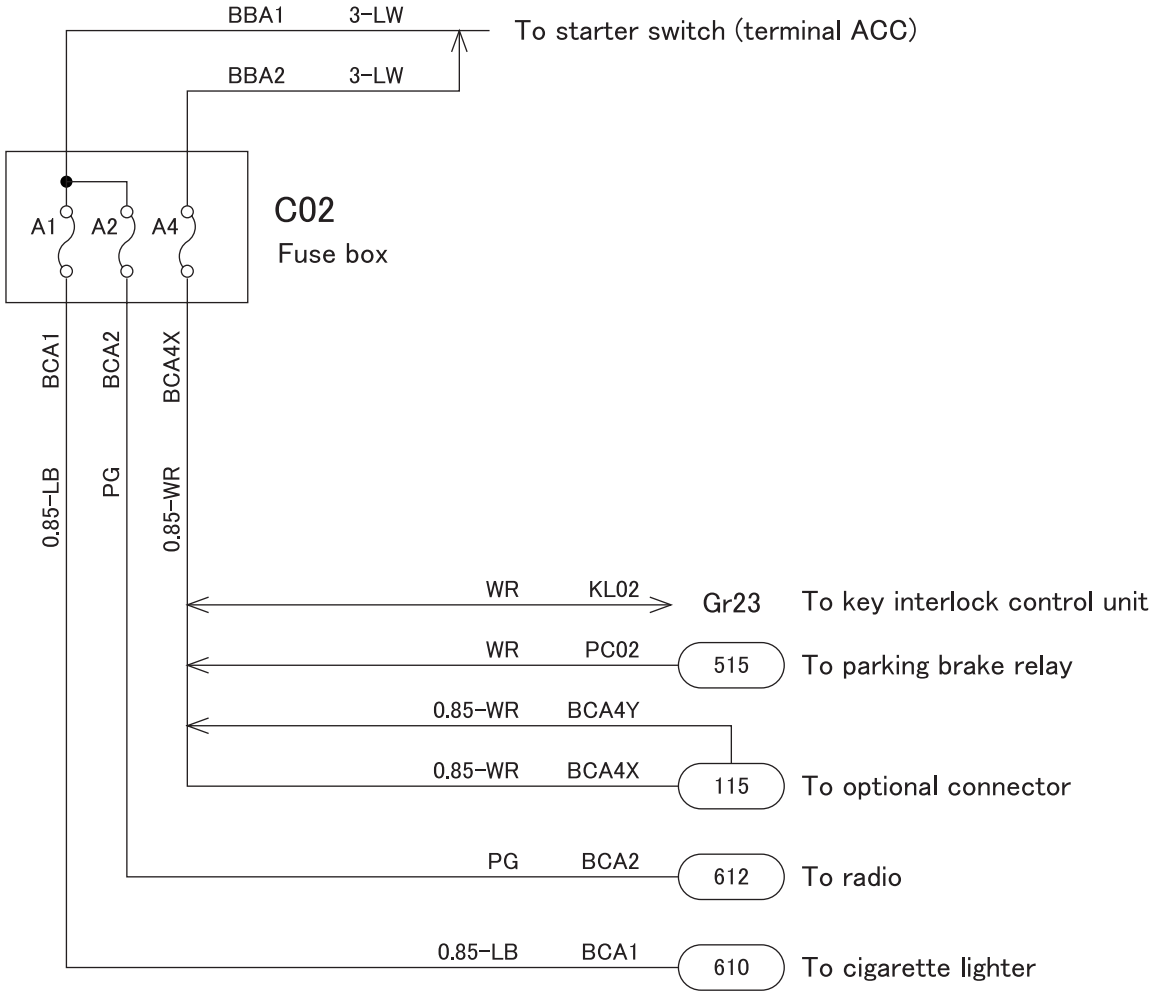

Fuse box
(Fuse B1 to B6)

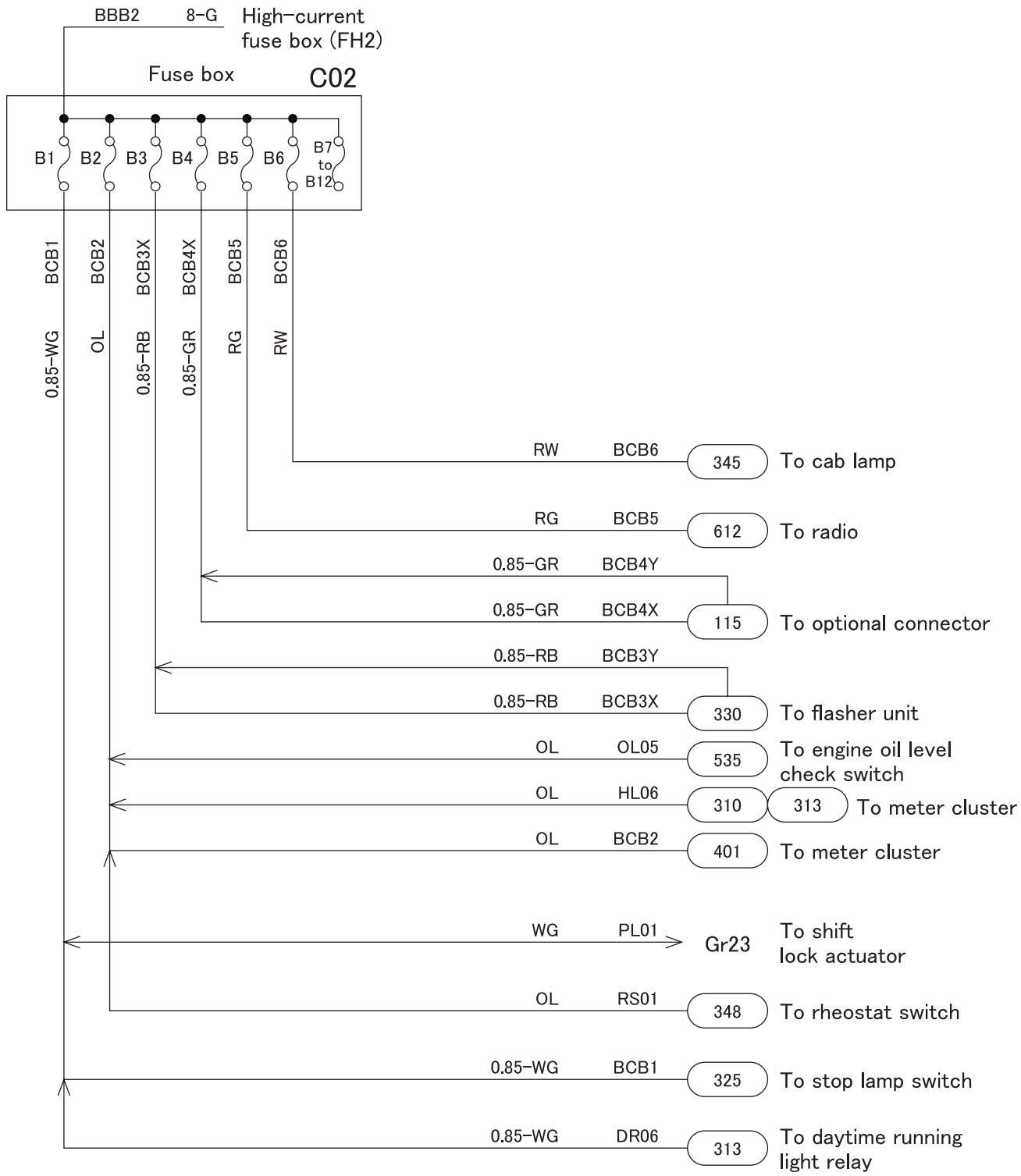

110-C03555

Fuse box
(Fuse B7 to B16)

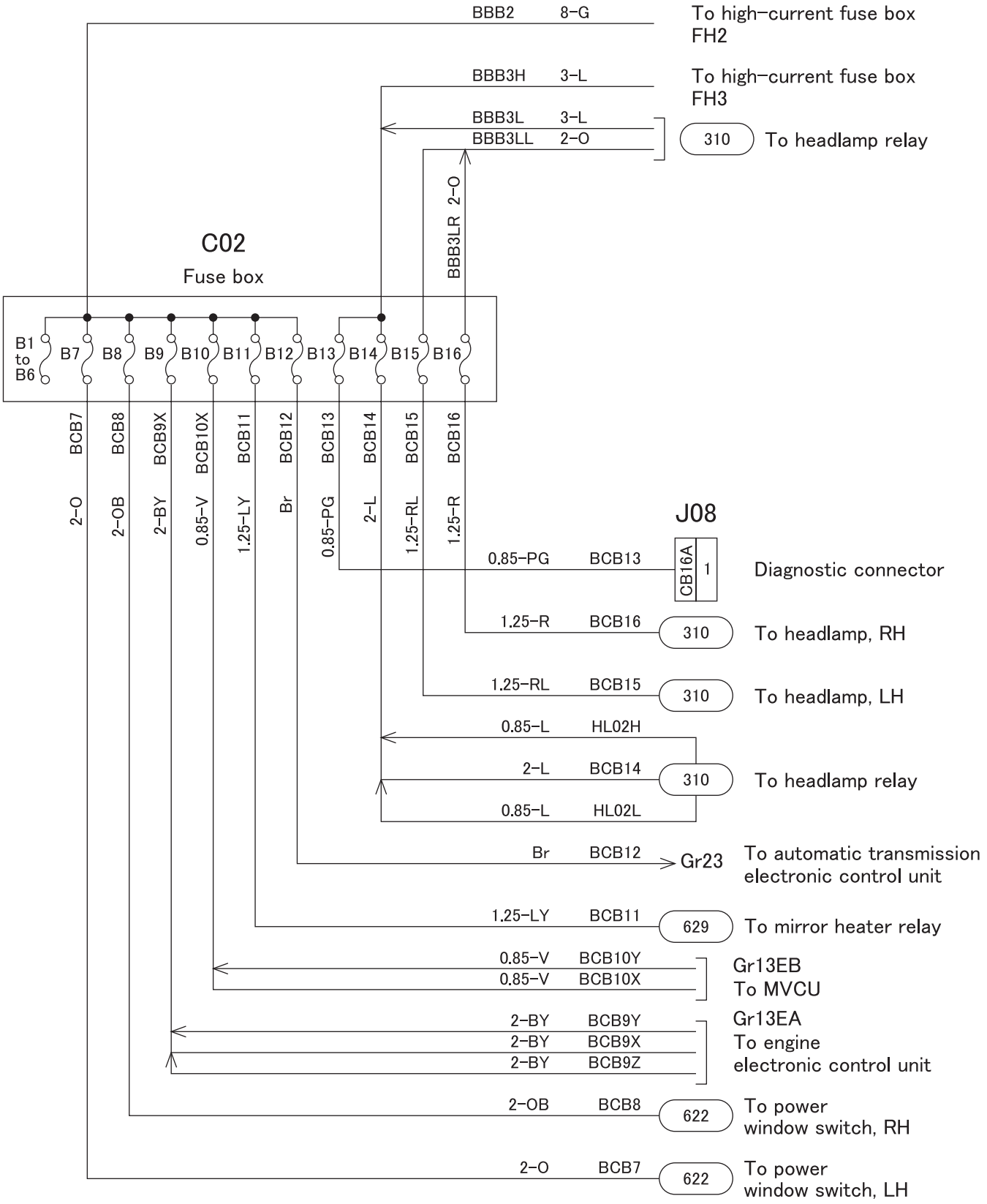

MVCU : Multifunction vehicle control unit

110-C03556

Fuse box
(Fuse M1 to M4)

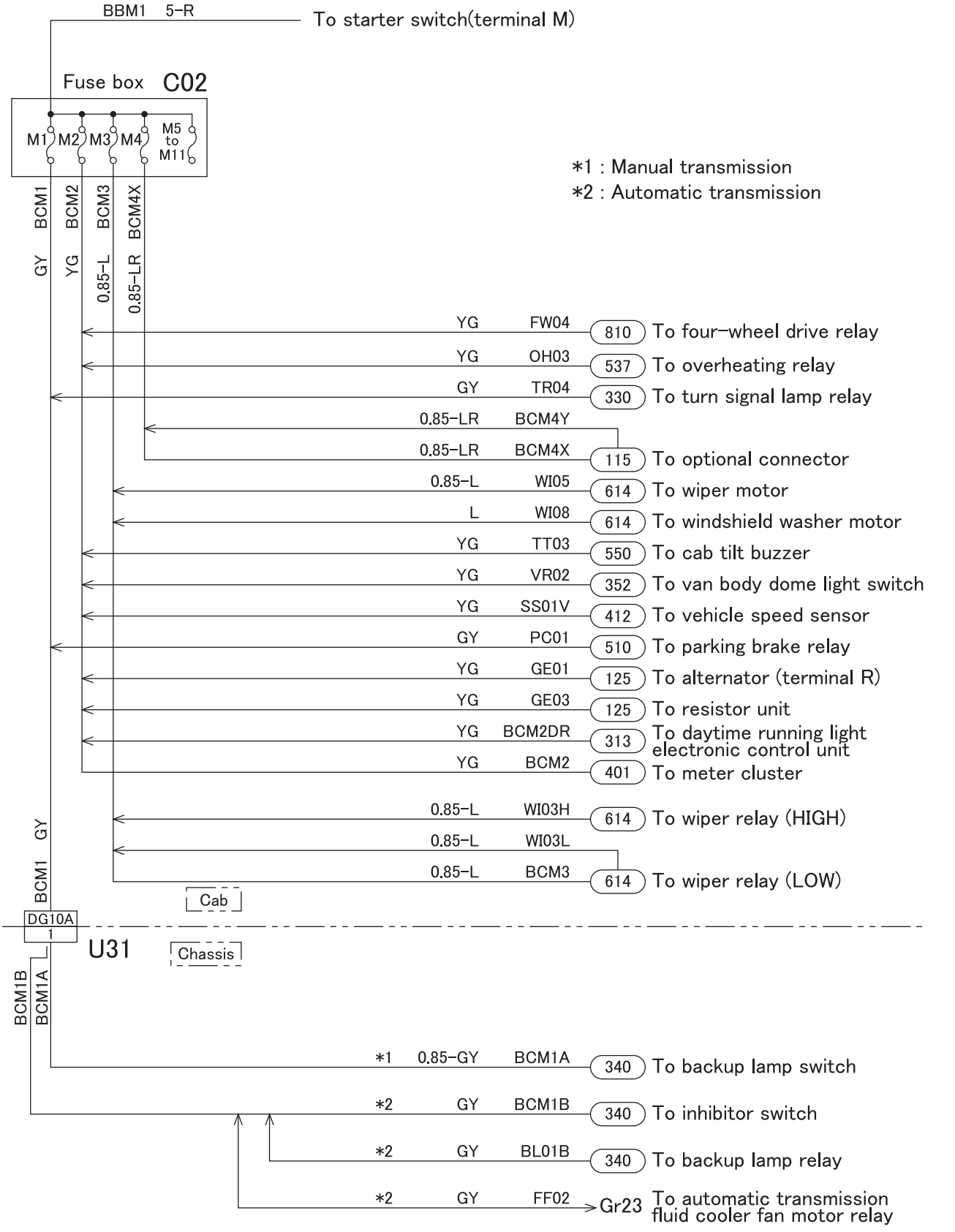

110-C04047

Fuse box
(Fuse M5, M6)

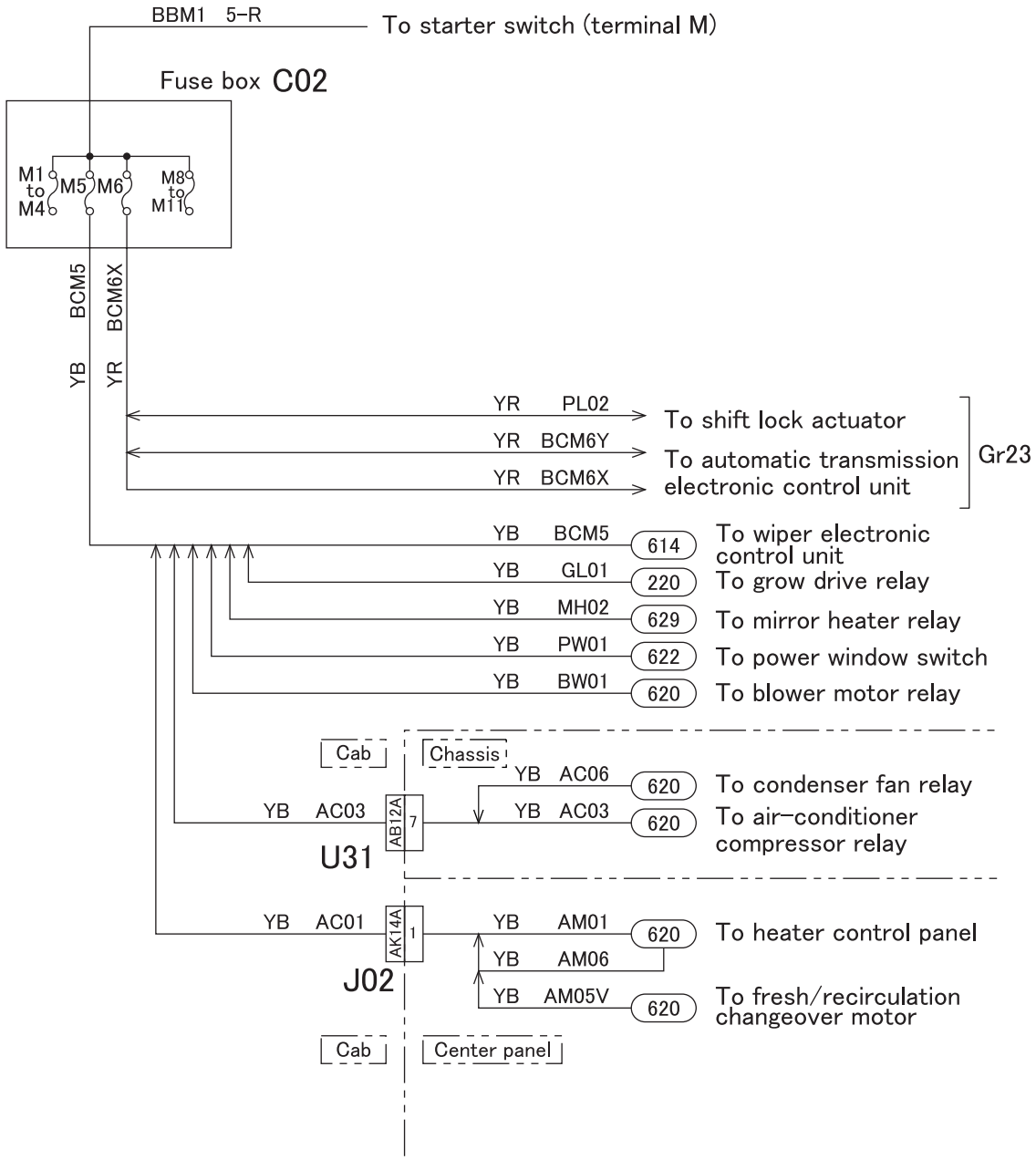

110-C03558

Fuse box
(Fuse M8)

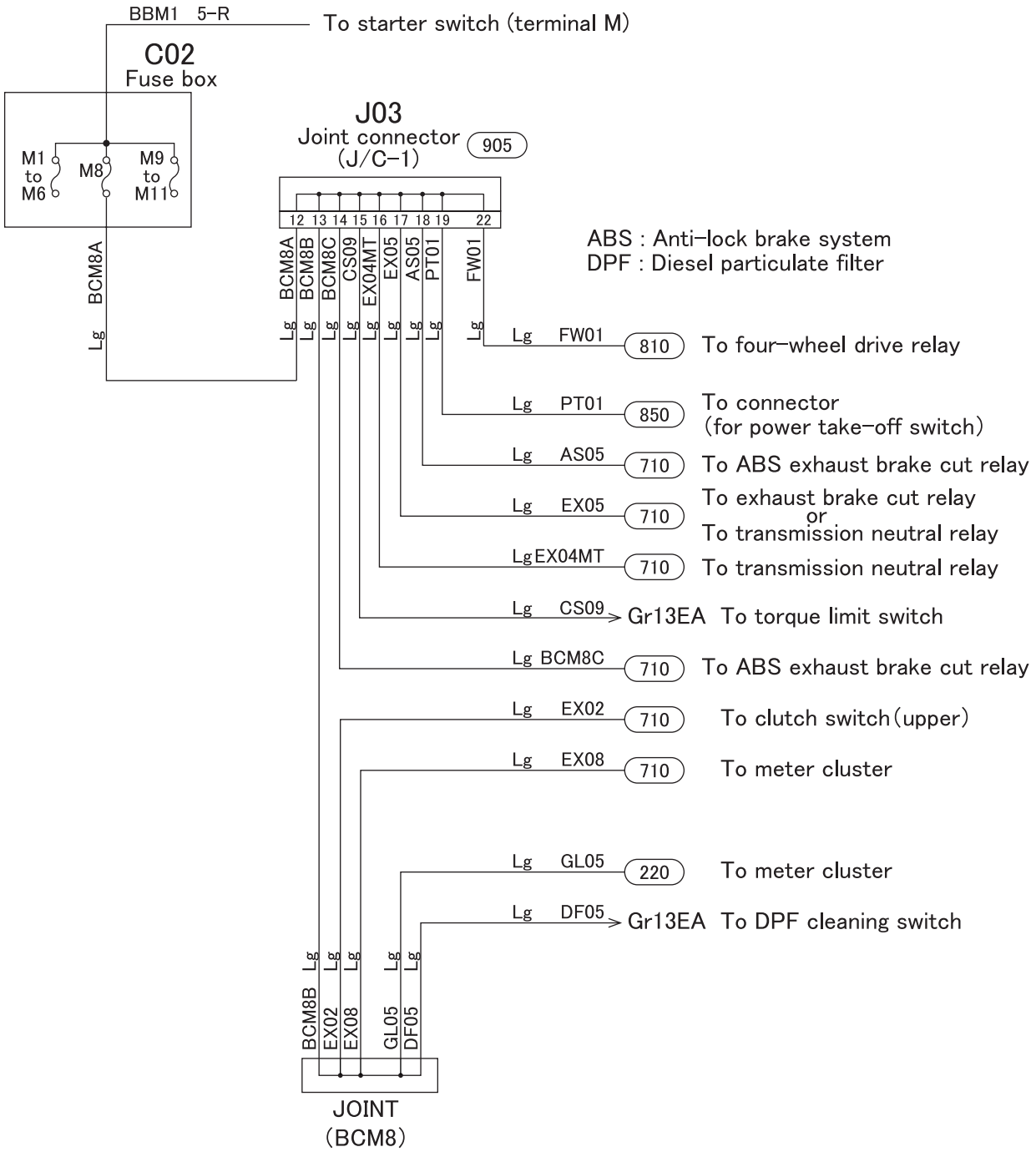

110-C04830

Fuse box
(Fuse M9 to M11)

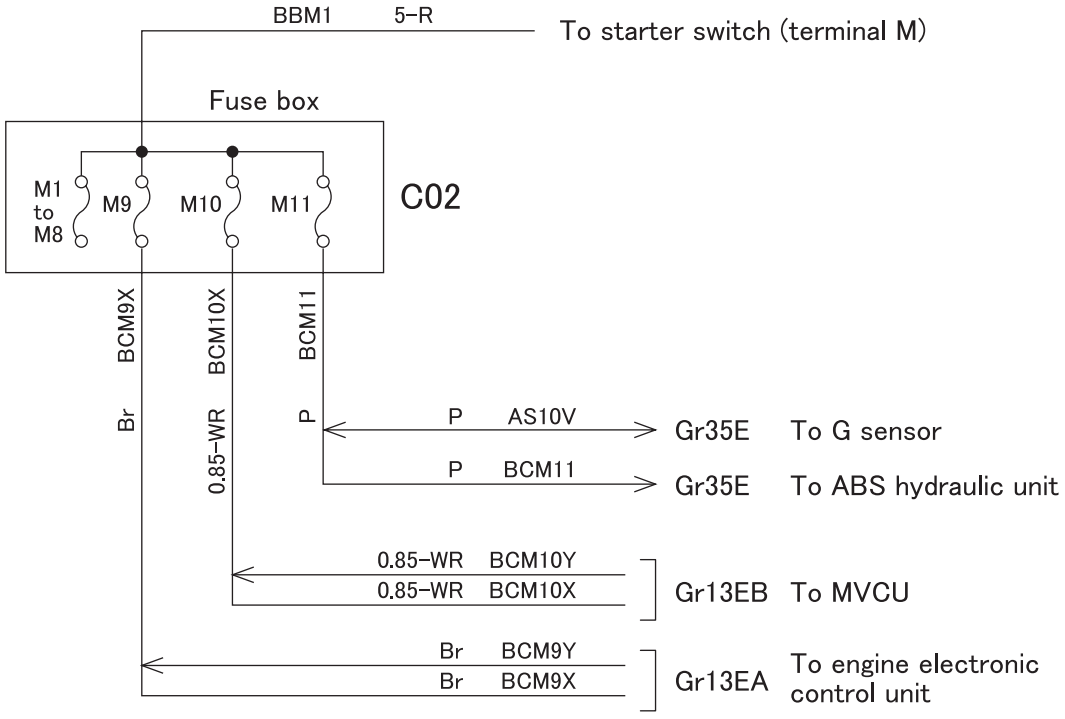

ABS : Anti-lock brake system

MVCU : Multifunction vehicle control unit

Fuse box
(Fuse S1)

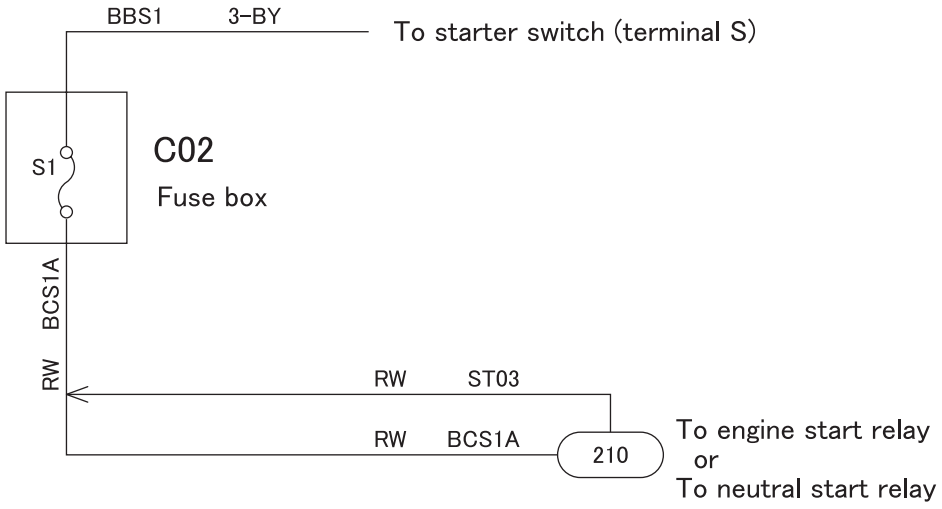

110-C03561

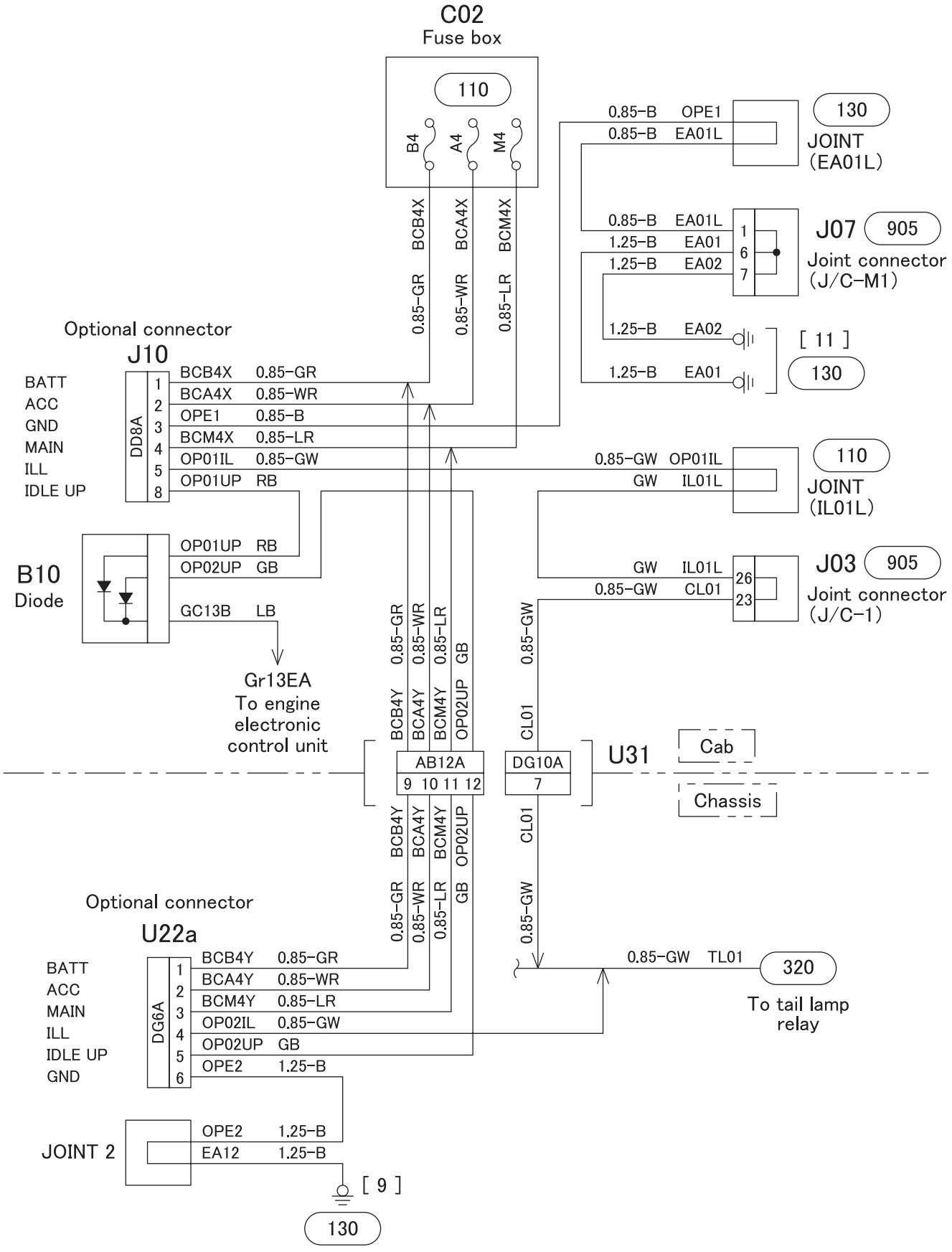
C02
Fuse box
110
B4
A4
M4
BCB4X
BCA4X
BCM4X
0.85-GR
0.85-WR
0.85-LR
0.85-B OPE1
0.85-B EA01L
130
JOINT
(EA01L)
0.85-B EA01L
1.25-B EA01
1.25-B EA02
1
6
7
J07
905
Joint connector
(J/C-M1)
1.25-B EA02
1.25-B EA01
[11]
130
Optional connector
J10
BATT
ACC
GND
MAIN
ILL
IDLE UP
DD8A
1
2
3
4
5
8
BCB4X 0.85-GR
BCA4X 0.85-WR
OPE1 0.85-B
BCM4X 0.85-LR
OP01IL 0.85-GW
OP01UP RB
0.85-GW OP01IL
GW IL01L
110
JOINT
(IL01L)
B10
Diode
OP01UP RB
OP02UP GB
GC13B LB
GW IL01L
0.85-GW CL01
26
23
J03
905
Joint connector
(J/C-1)
Gr13EA
To engine
electronic
control unit
BCB4Y
BCA4Y
BCM4Y
OP02UP
GB
CL01
AB12A
9 10 11 12
DG10A
7
U31
Cab
Chassis
Optional connector
U22a
BATT
ACC
MAIN
ILL
IDLE UP
GND
DG6A
1
2
3
4
5
6
BCB4Y 0.85-GR
BCA4Y 0.85-WR
BCM4Y 0.85-LR
OP02IL 0.85-GW
OP02UP GB
OPE2 1.25-B
0.85-GW TL01
320
To tail lamp
relay
JOINT 2
OPE2 1.25-B
EA12 1.25-B
[9]
130

115-C03562

125 BATTERY CHARGING CIRCUIT

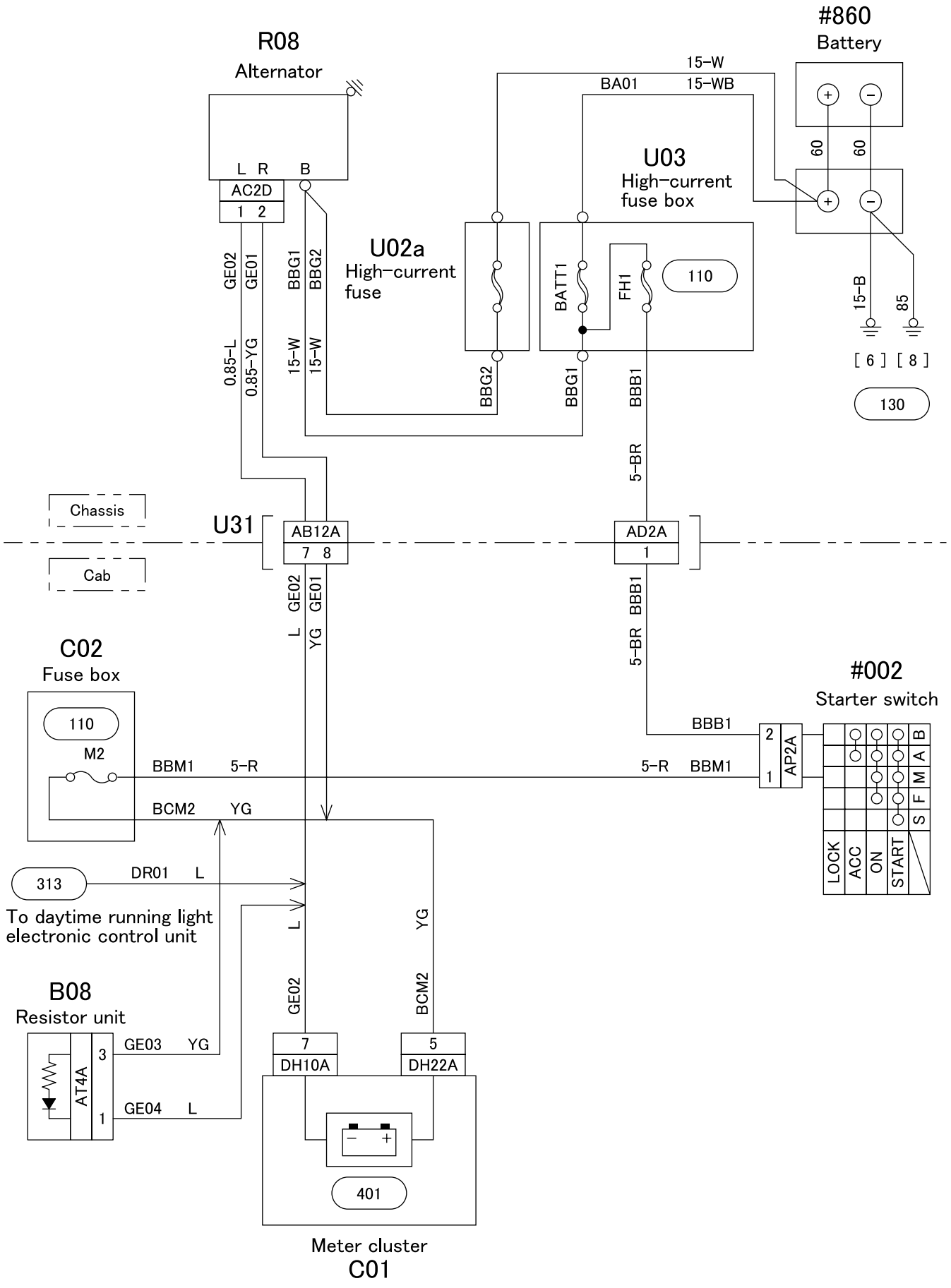

125-C03563

M E M O

[1] to [3] Cab ground

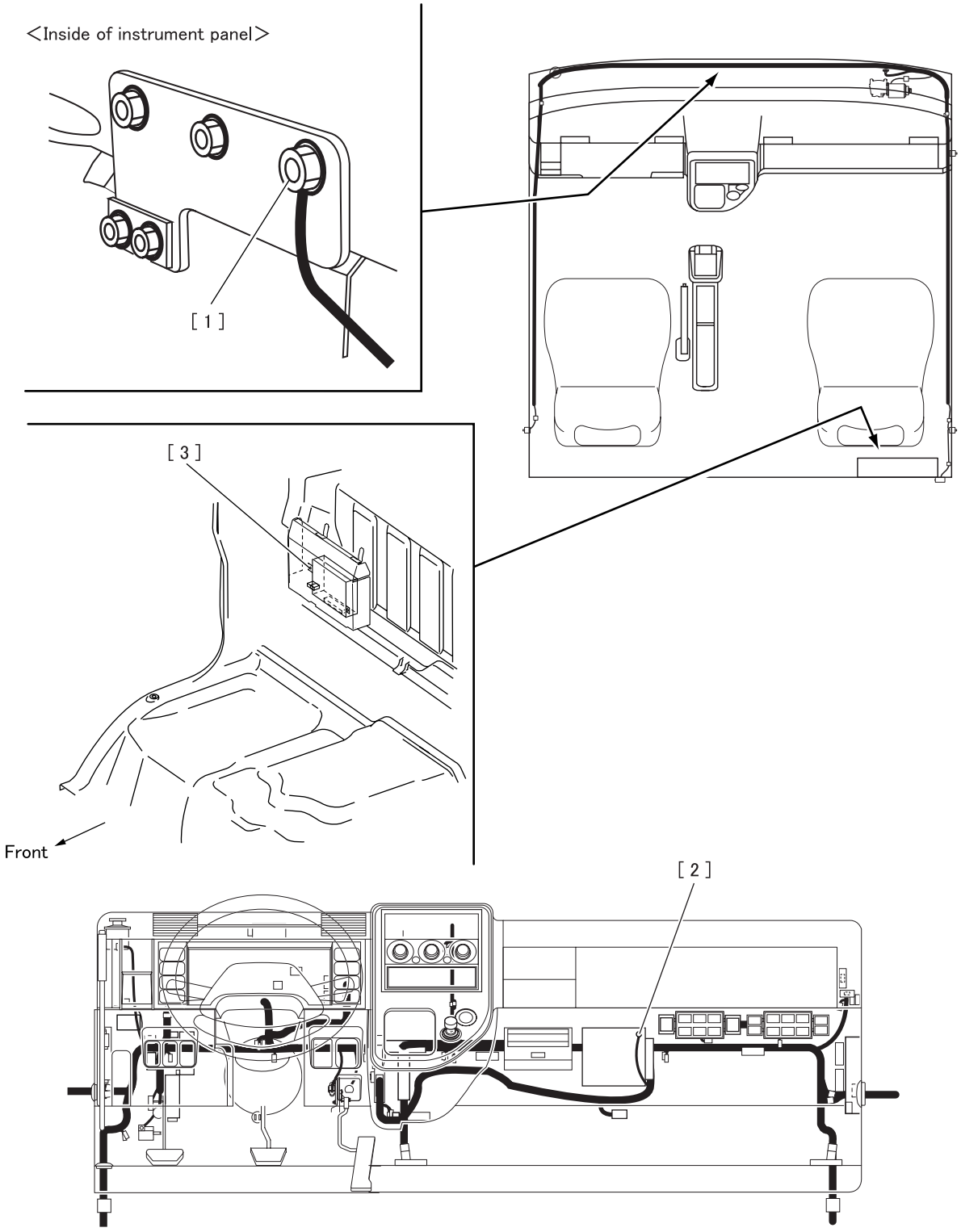

L02133

Location	Circuit No.	Wire diameter-wire color	Destination	Remarks
[1]	MVE3	B	MVCU case ground	–
	GCE5	B	Engine ECU case ground	–
	EA10	5-B	Frame ground	–
[2]	–	1.25-B	Cab ground	Engine ECU case ground
[3]	–	1.25-B	Cab ground	MVCU case ground

ECU: Electronic control unit
MVCU: Multifunction vehicle control unit

[5] to [12] Chassis ground

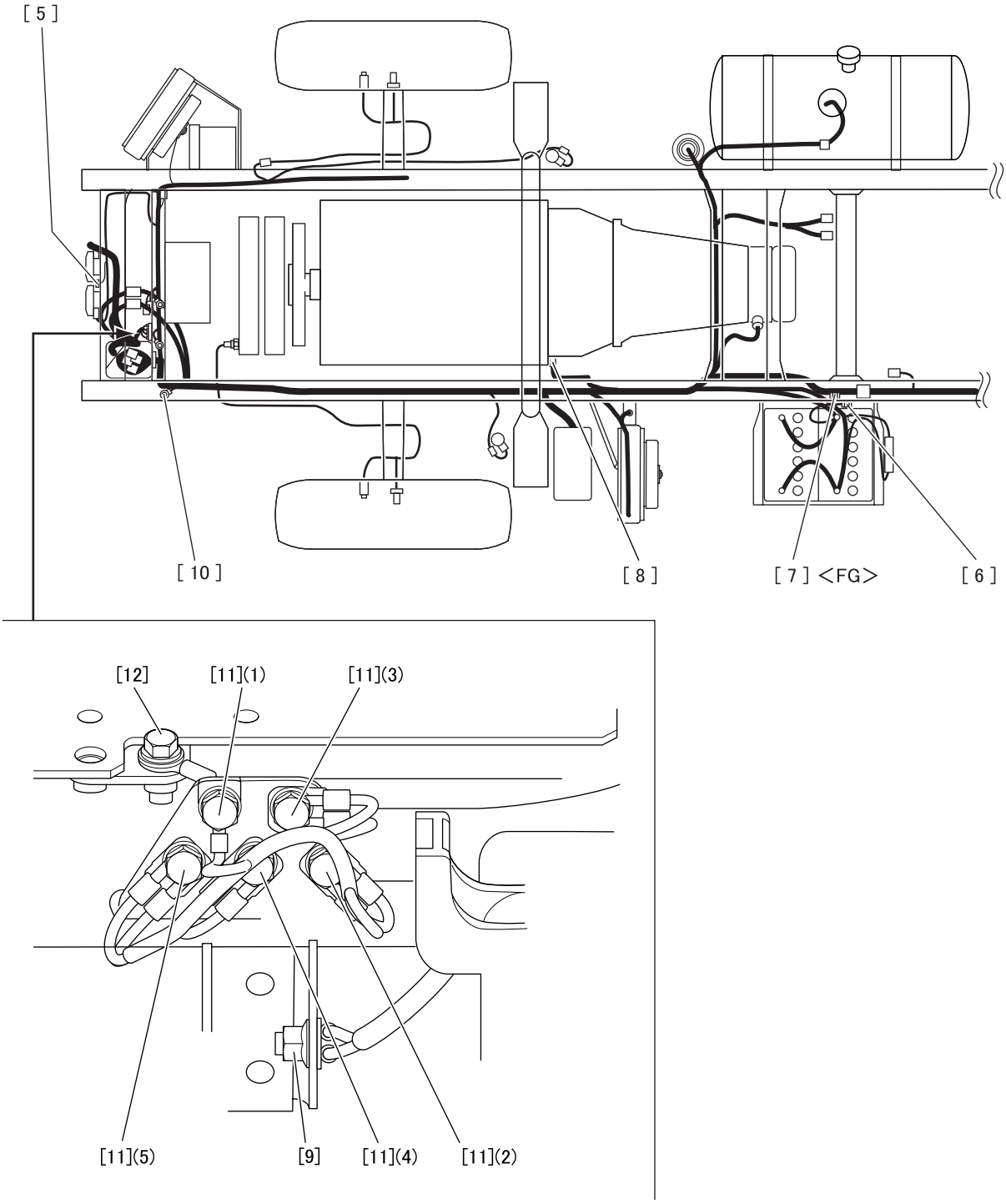

L02712

Location	Circuit No.	Wire diameter-wire color	Destination	Remarks
[5]	HNE1	1.25-B	Horn bracket	–
[6]	–	15-B	Battery	Battery ground
[7]	FWE1	0.85-B	JOINT3	–
[8]	–	85	Engine	Engine ground
[9]	EA11	2-B	JOINT1	–
	EA12	1.25-B	JOINT2	–
[10]	ASE1	3-B	Hydraulic unit	–
	ASE2	3-B	Hydraulic unit	–
[11](1)	BWE2	3-B	Center panel harness	–
[11](2)	EA01	1.25-B	Joint connector (J/C-M1)	–
	EA03A	3-B	JOINT (EA03)	–
	EA04	B	Meter cluster	–
[11](3)	EA07	0.85-B	Joint connector (J/C-1)	–
	GCE1	2-B	Engine electronic control unit	–
	GCE3	2-B	Engine electronic control unit	–
[11](4)	EA08	0.85-B	Joint connector (J/C-1)	–
	GCE2	2-B	Engine electronic control unit	–
[11](5)	EA02	1.25-B	Joint connector (J/C-M1)	–
	EA03B	3-B	JOINT (EA03)	–
	EA10	5-B	Cab ground	–
[12]	ACE2	2-B	Condenser fan motor	–
	EA14	1.25-B	Rear chassis harness	–

Entire ground

- This diagram indicates grounding points.
- See the following pages for branching of grounding (wiring for ☆).
  (in circuit No. order)

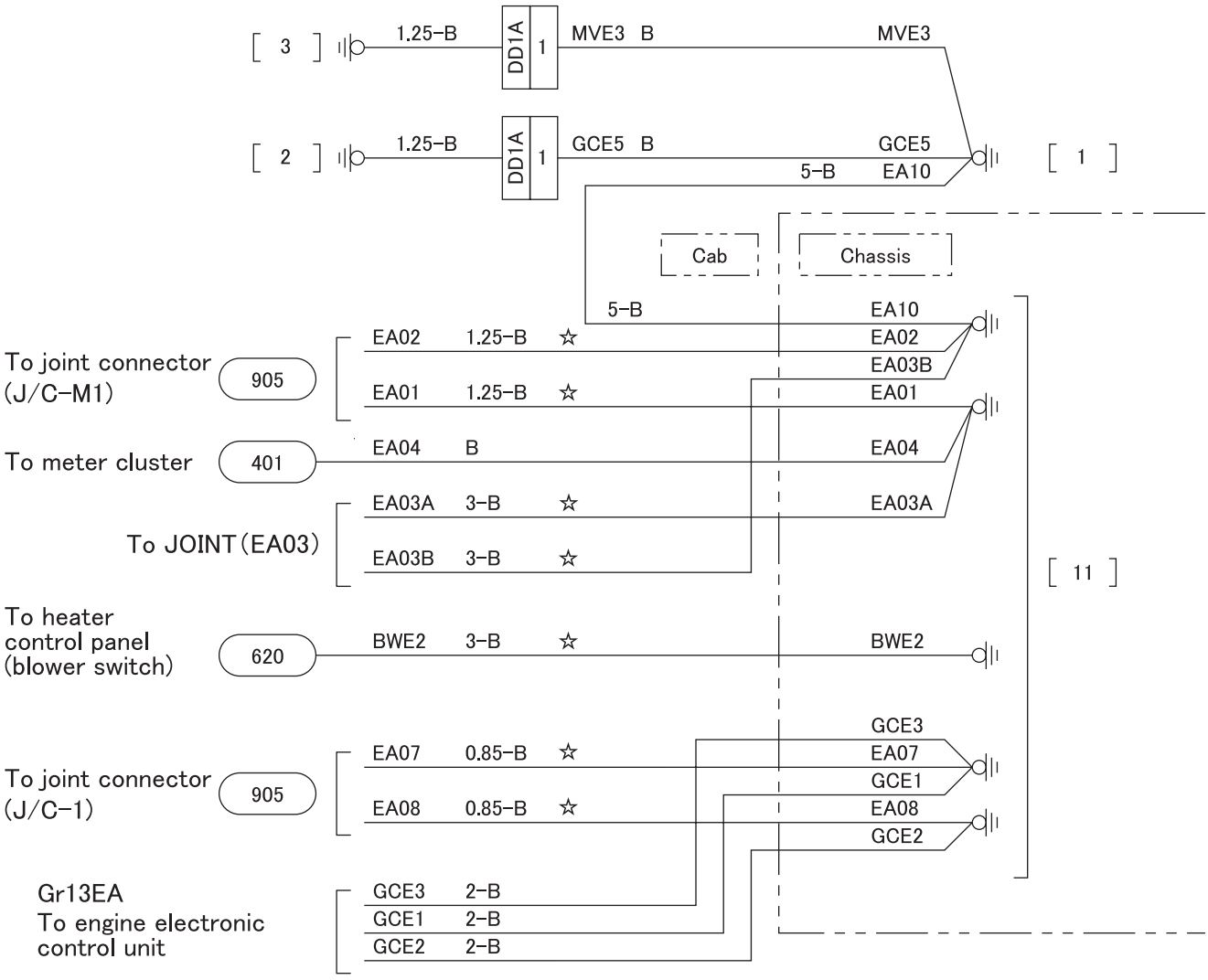

130-C04831-1

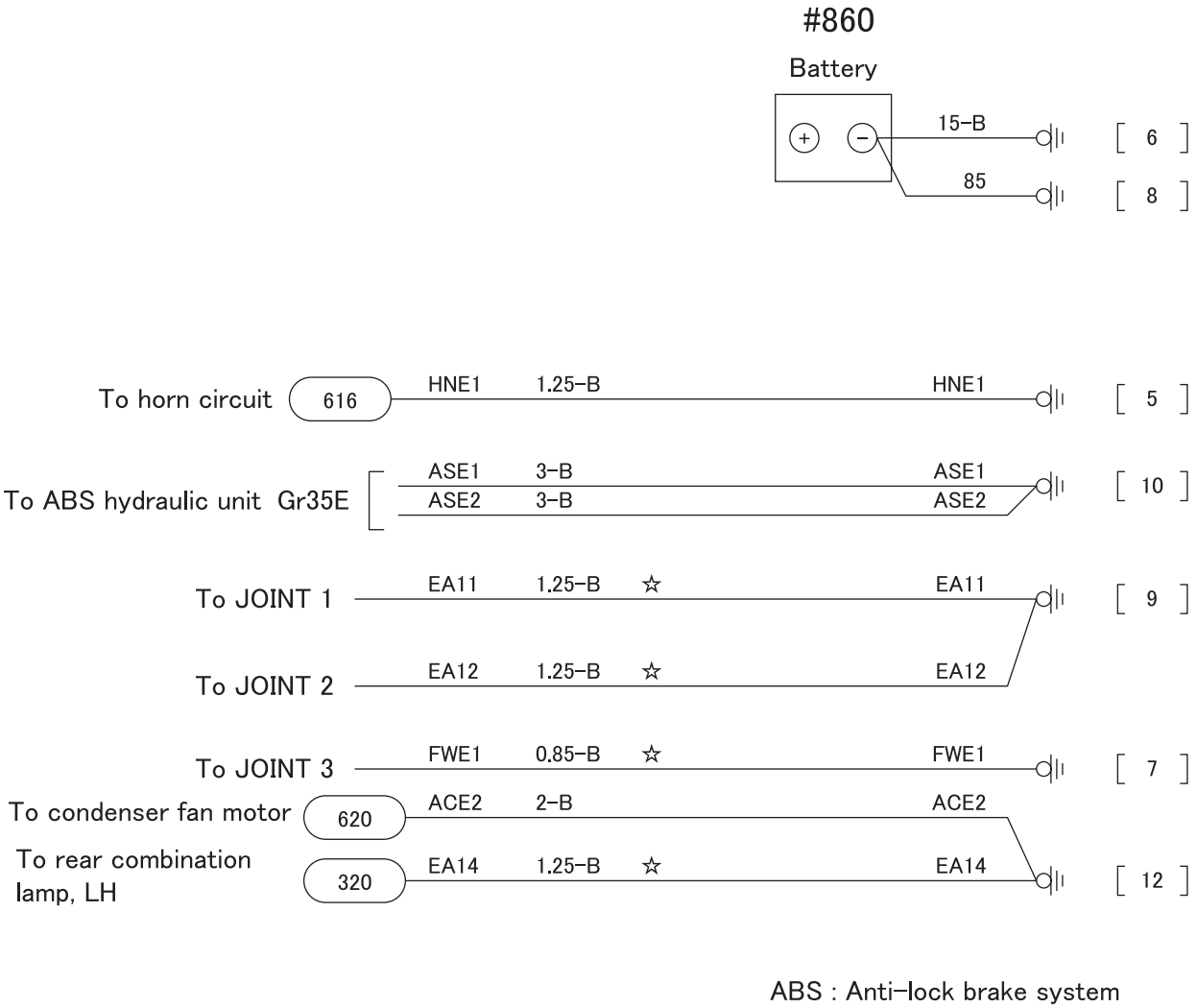

ABS : Anti-lock brake system

Circuit No. BWE2 chassis ground

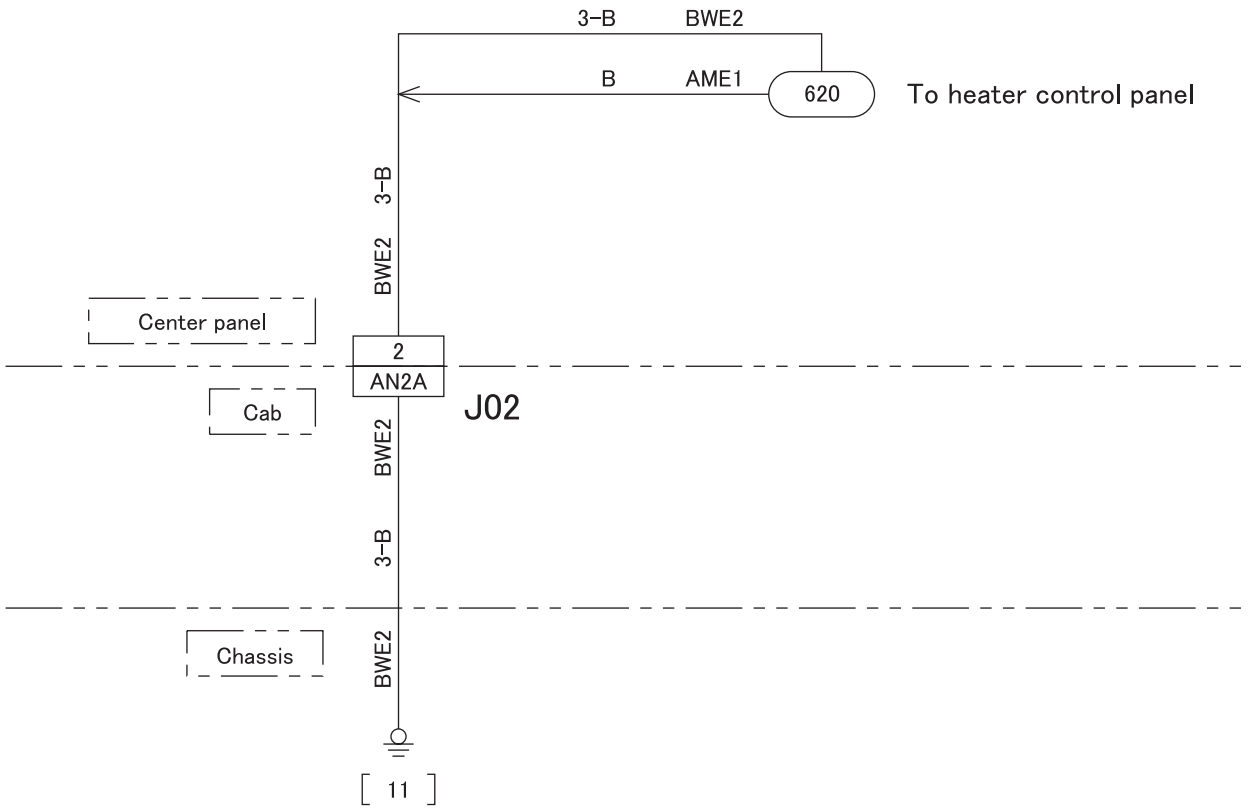

130-C03565

Circuit No. EA01, EA02 chassis ground
＜Main ground＞

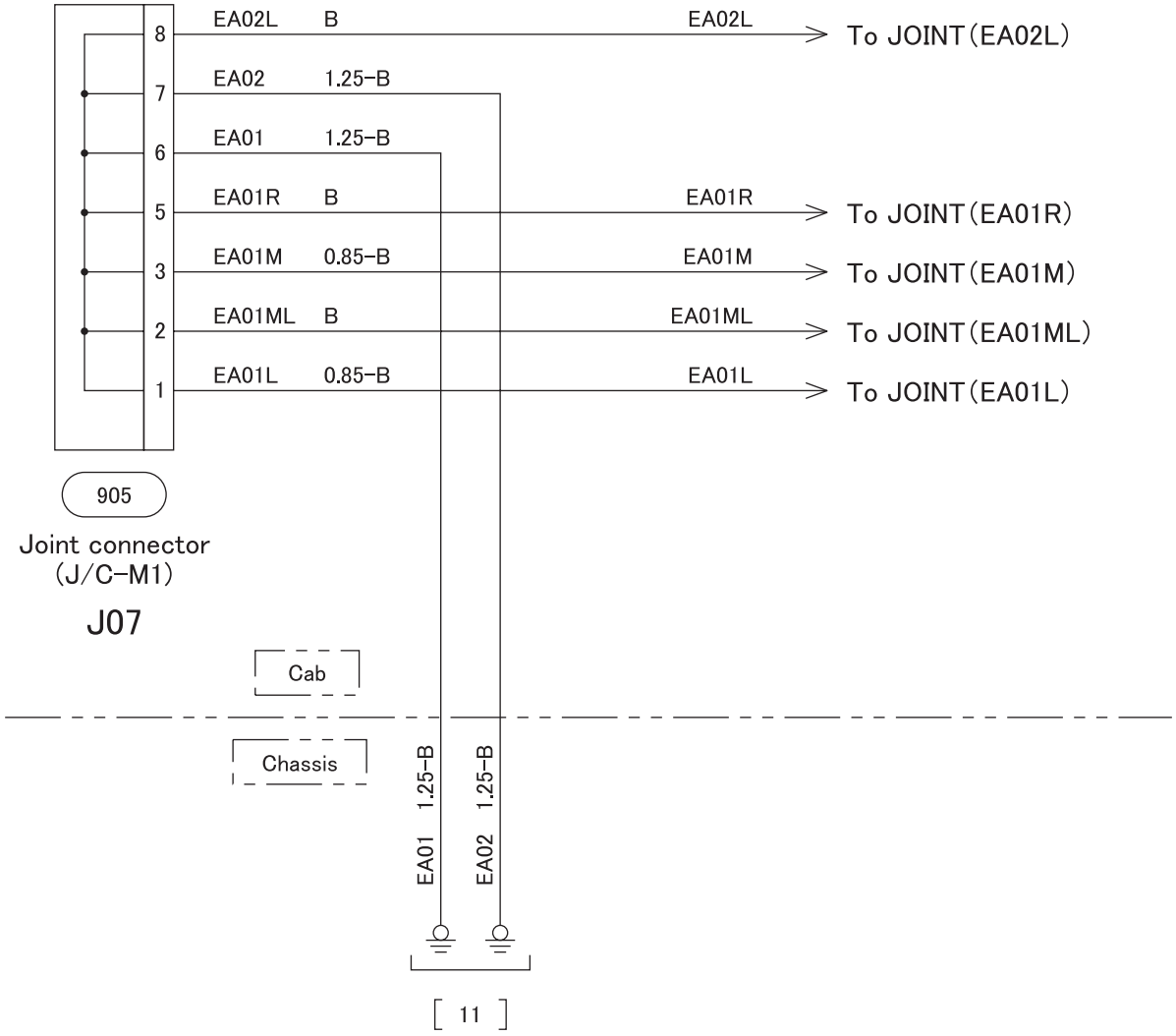

Circuit No. EA01, EA02 chassis ground
＜JOINT(EA01L)＞

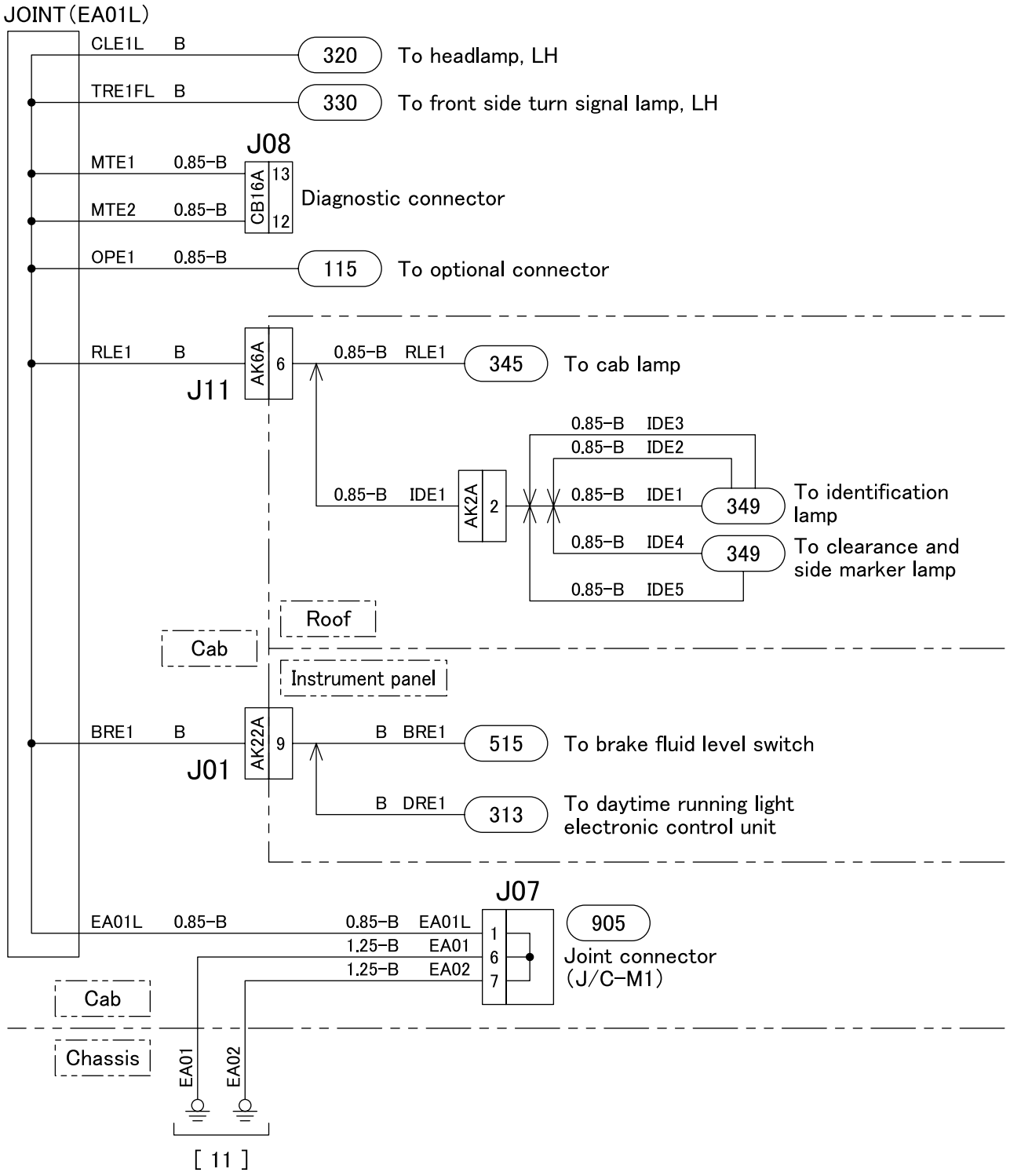

130-C03567

Circuit No. EA01, EA02 chassis ground
＜JOINT(EA01M)＞

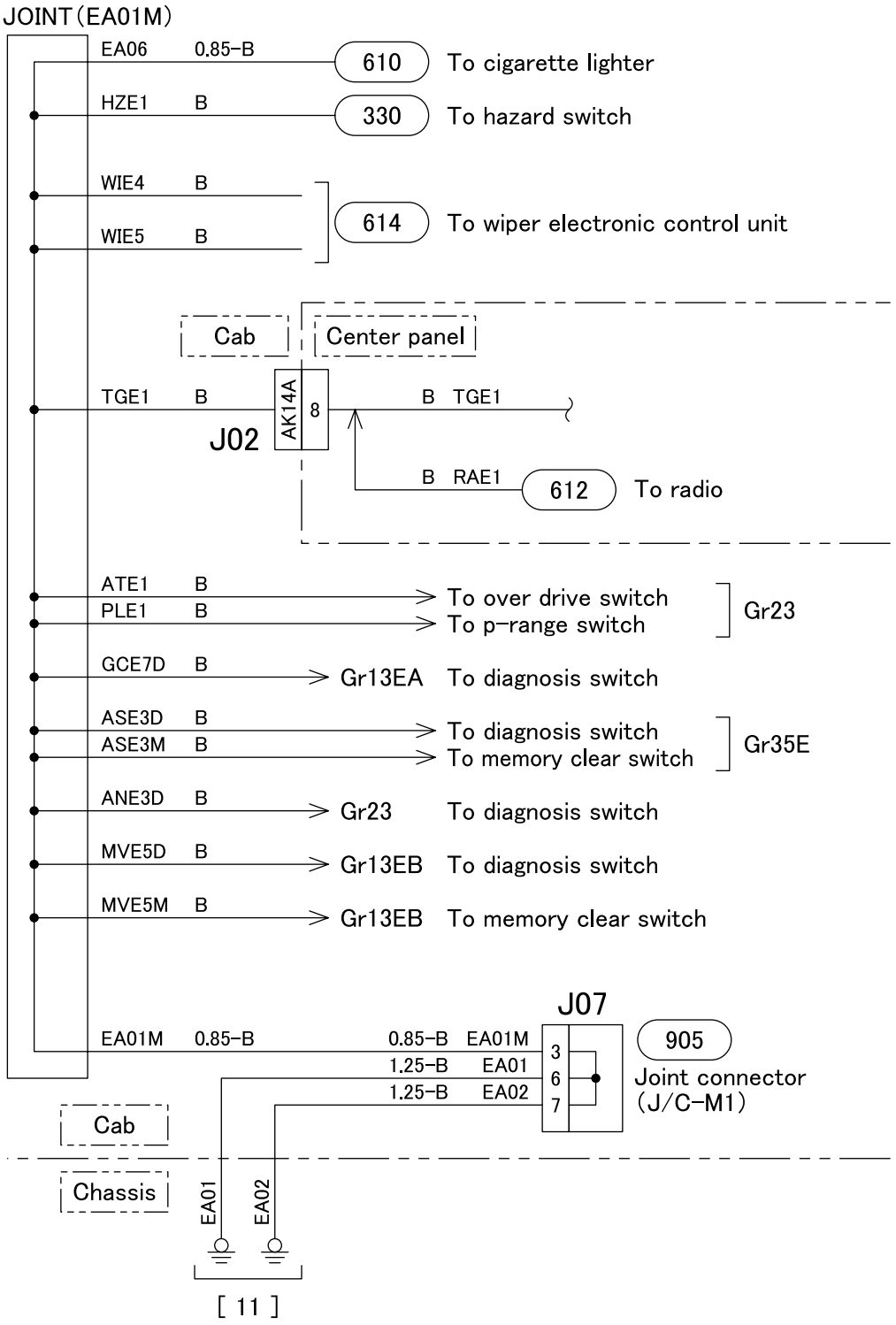

Circuit No. EA01, EA02 chassis ground
＜JOINT(EA01ML)＞

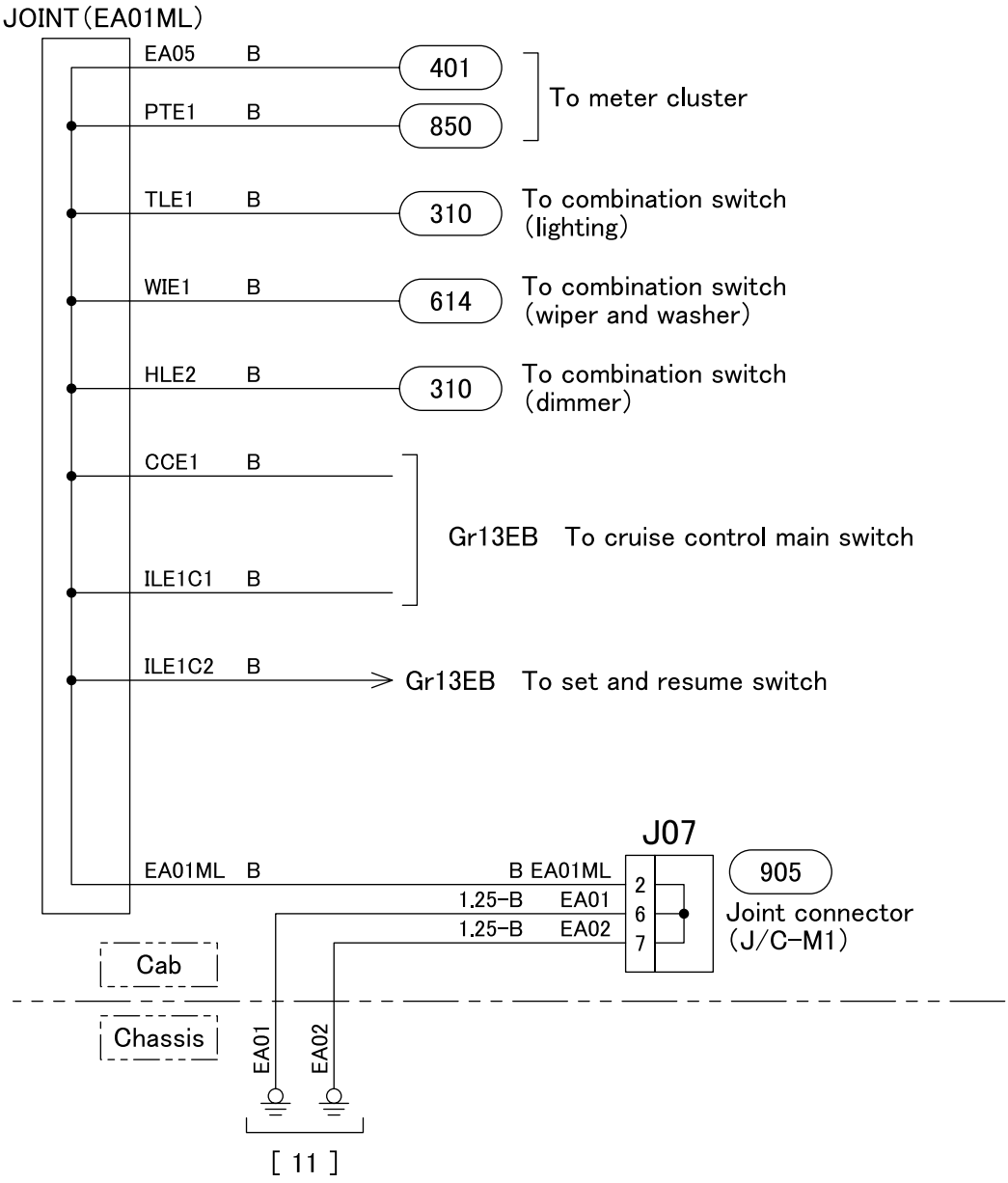

130-C04832

Circuit No. EA01, EA02 chassis ground
＜JOINT(EA01R)＞

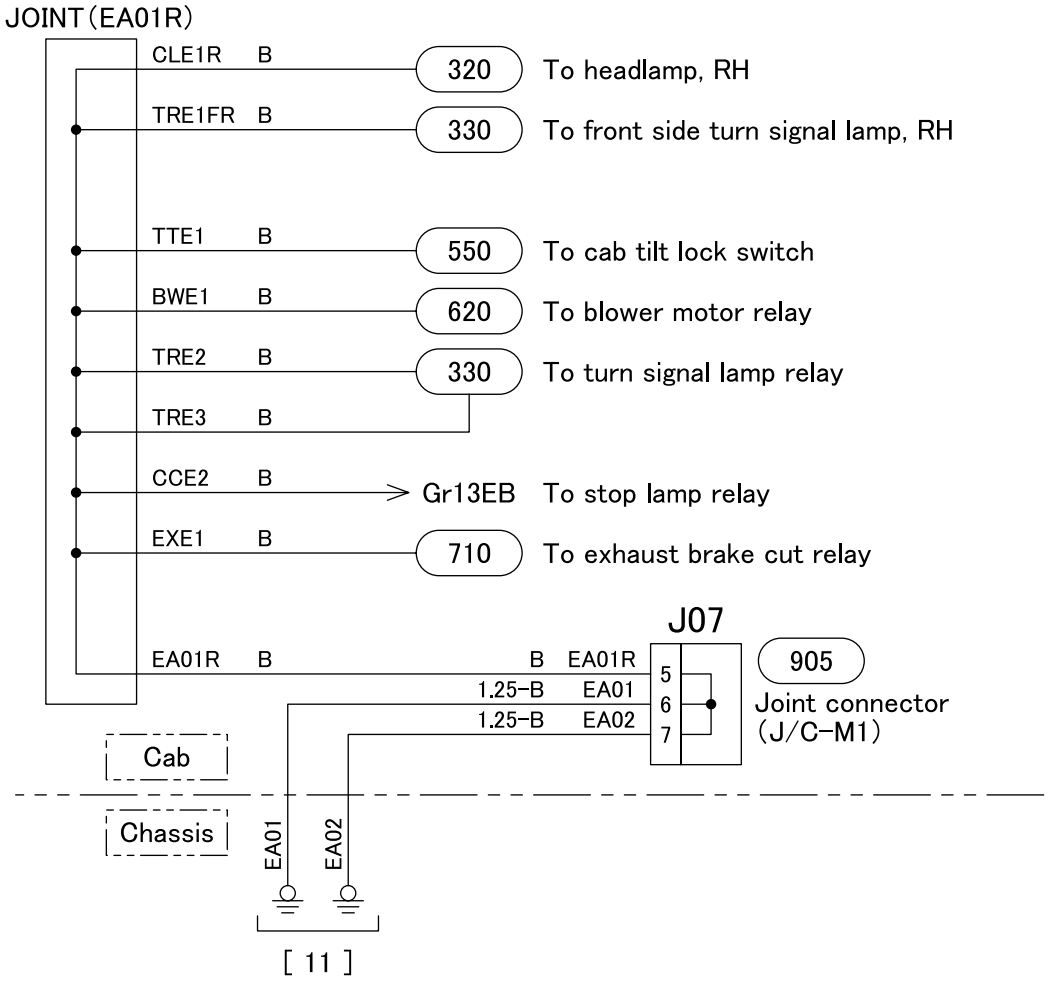

Circuit No. EA01, EA02 chassis ground
＜JOINT(EA02L)＞

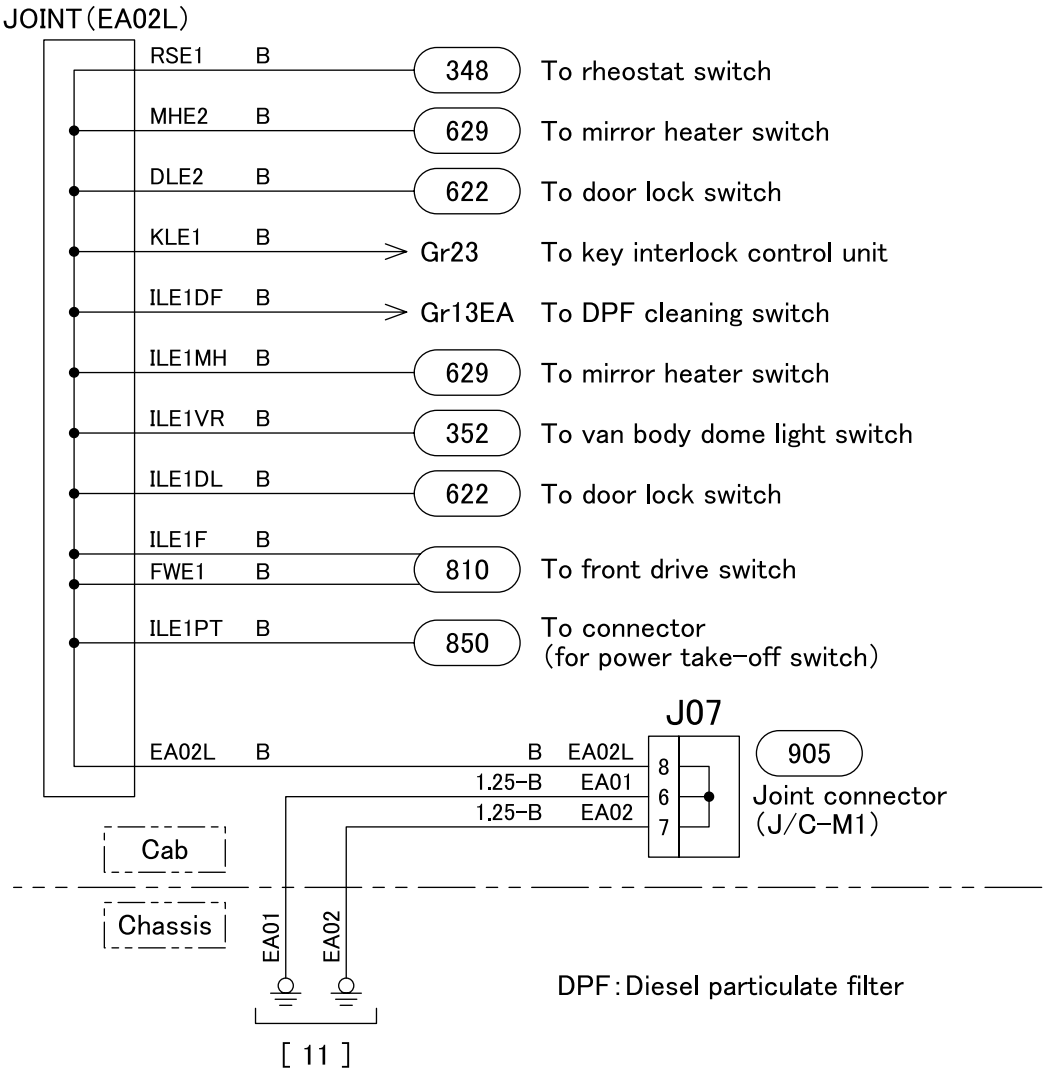

130-C04833

Circuit No. EA03A, EA03B chassis ground

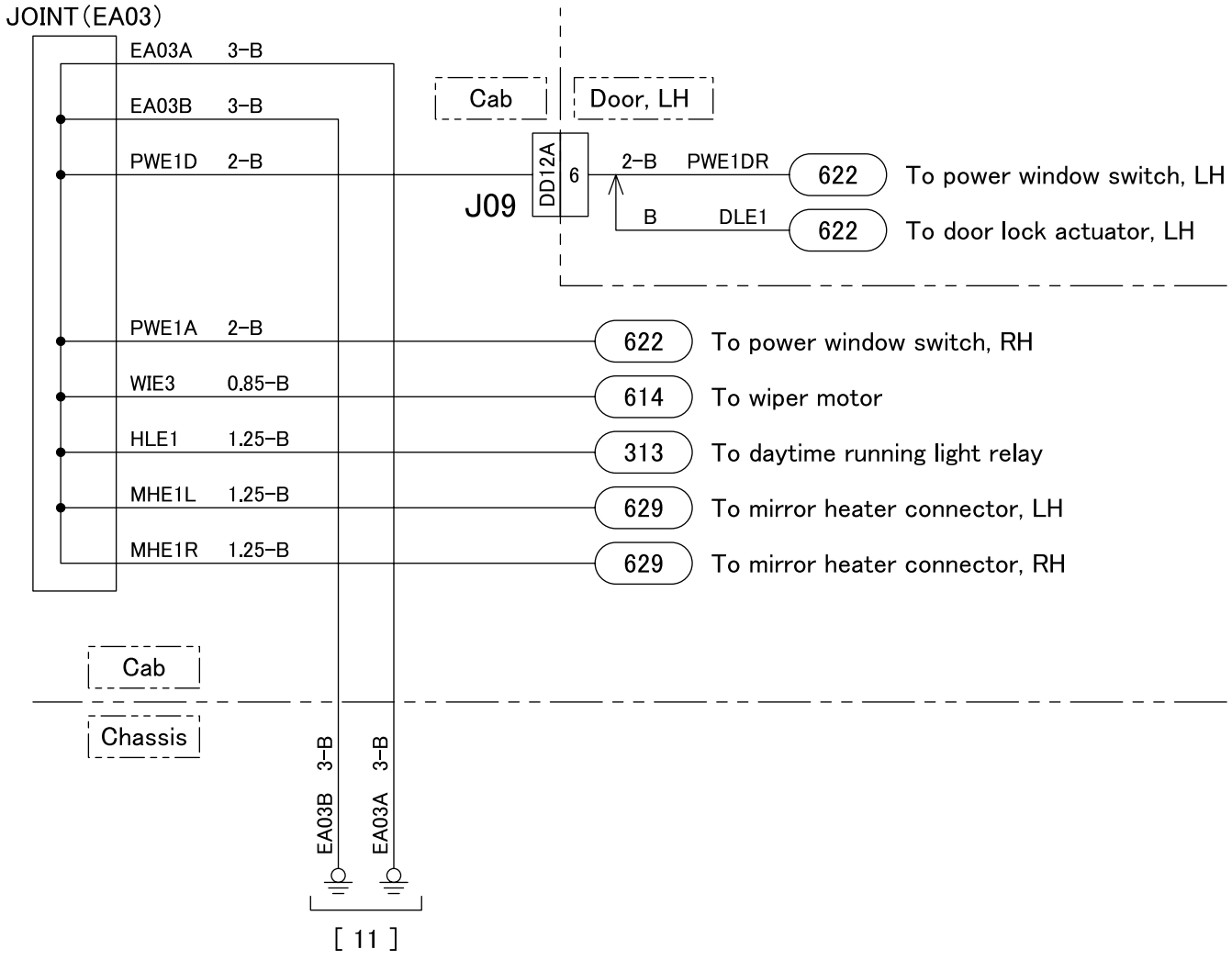

130-C03572

Circuit No. EA07, EA08 chassis ground

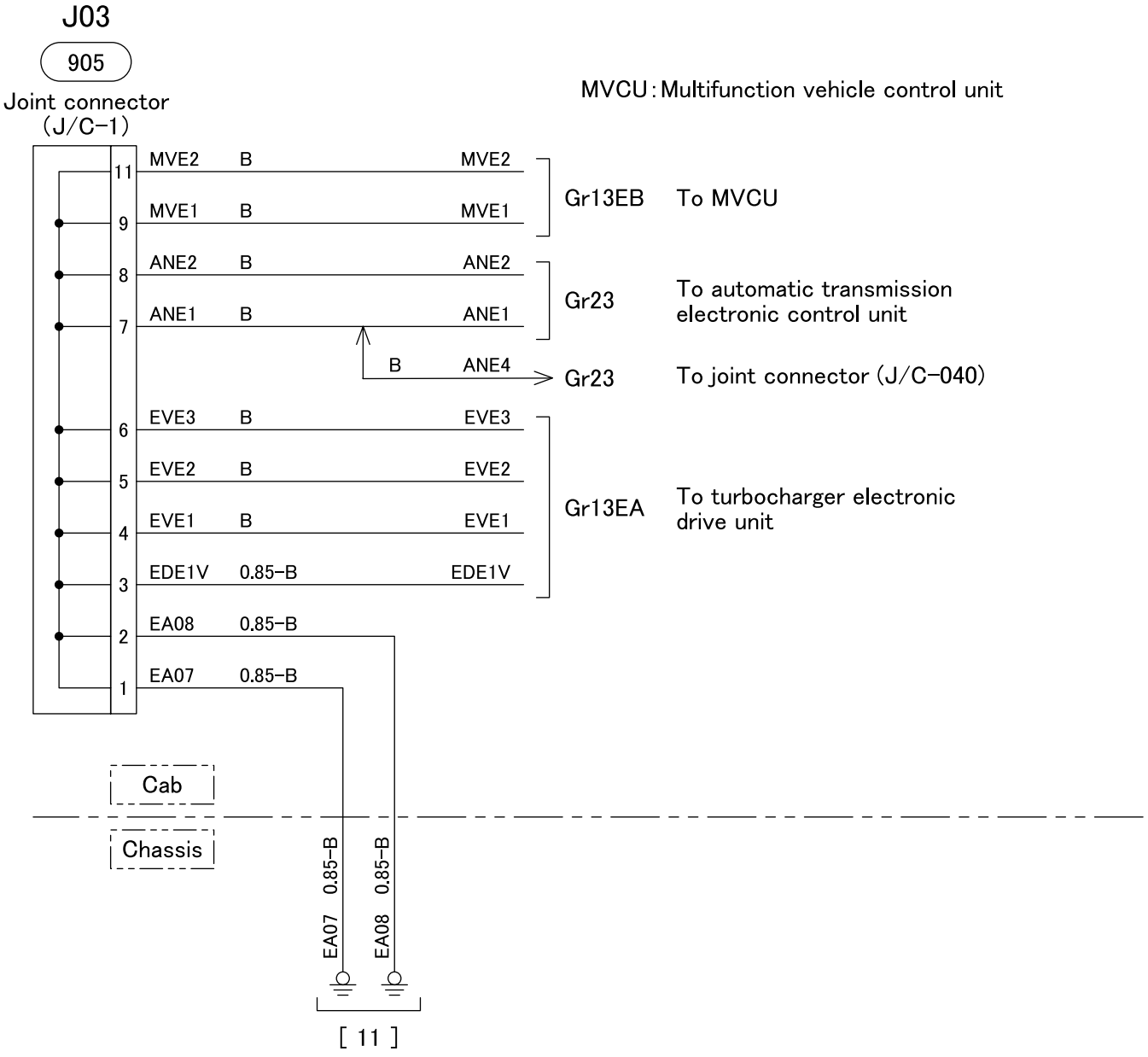

130-C03573

Circuit No. EA11, EA12 chassis ground

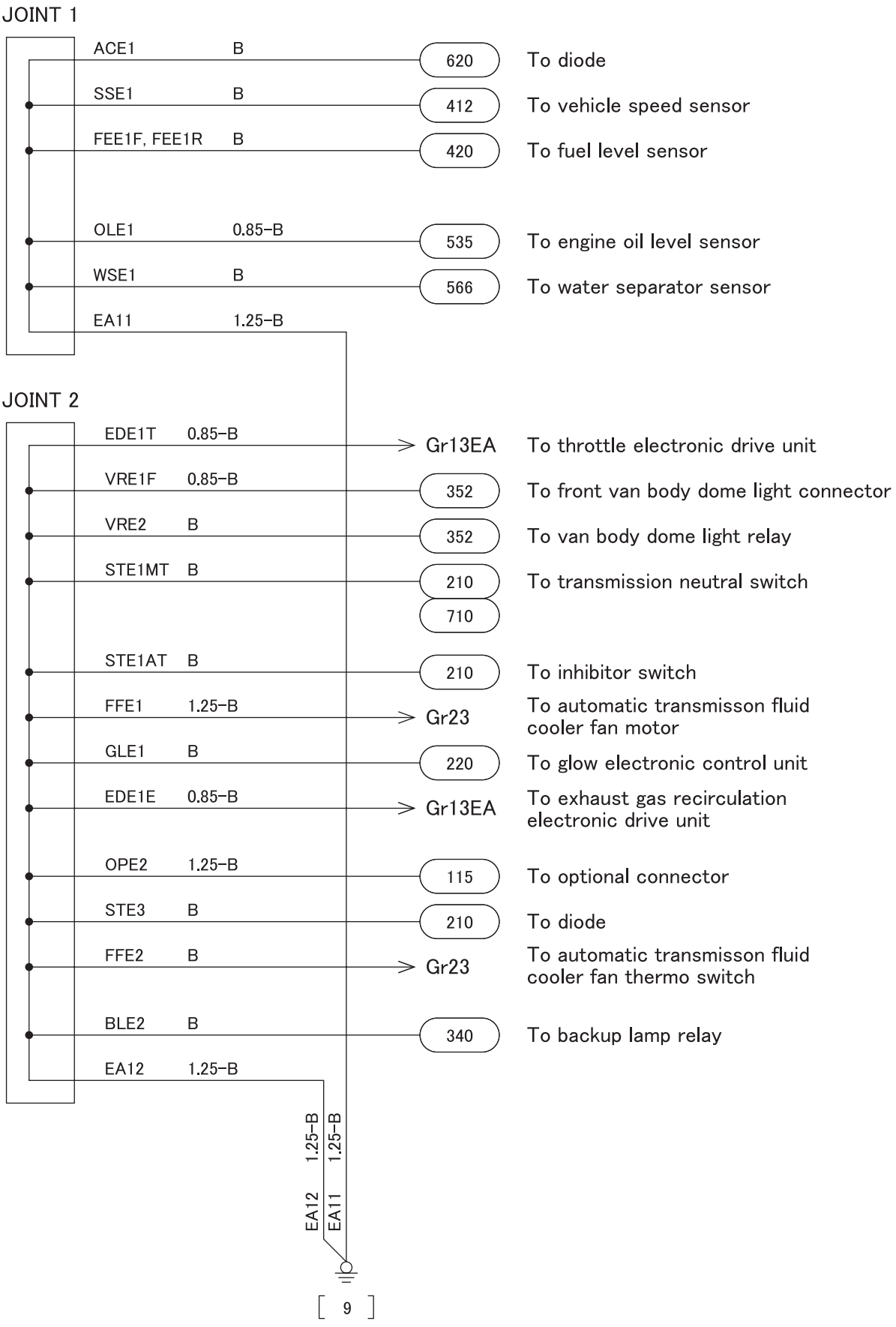

130-C04834

Circuit No.EA14 chassis ground

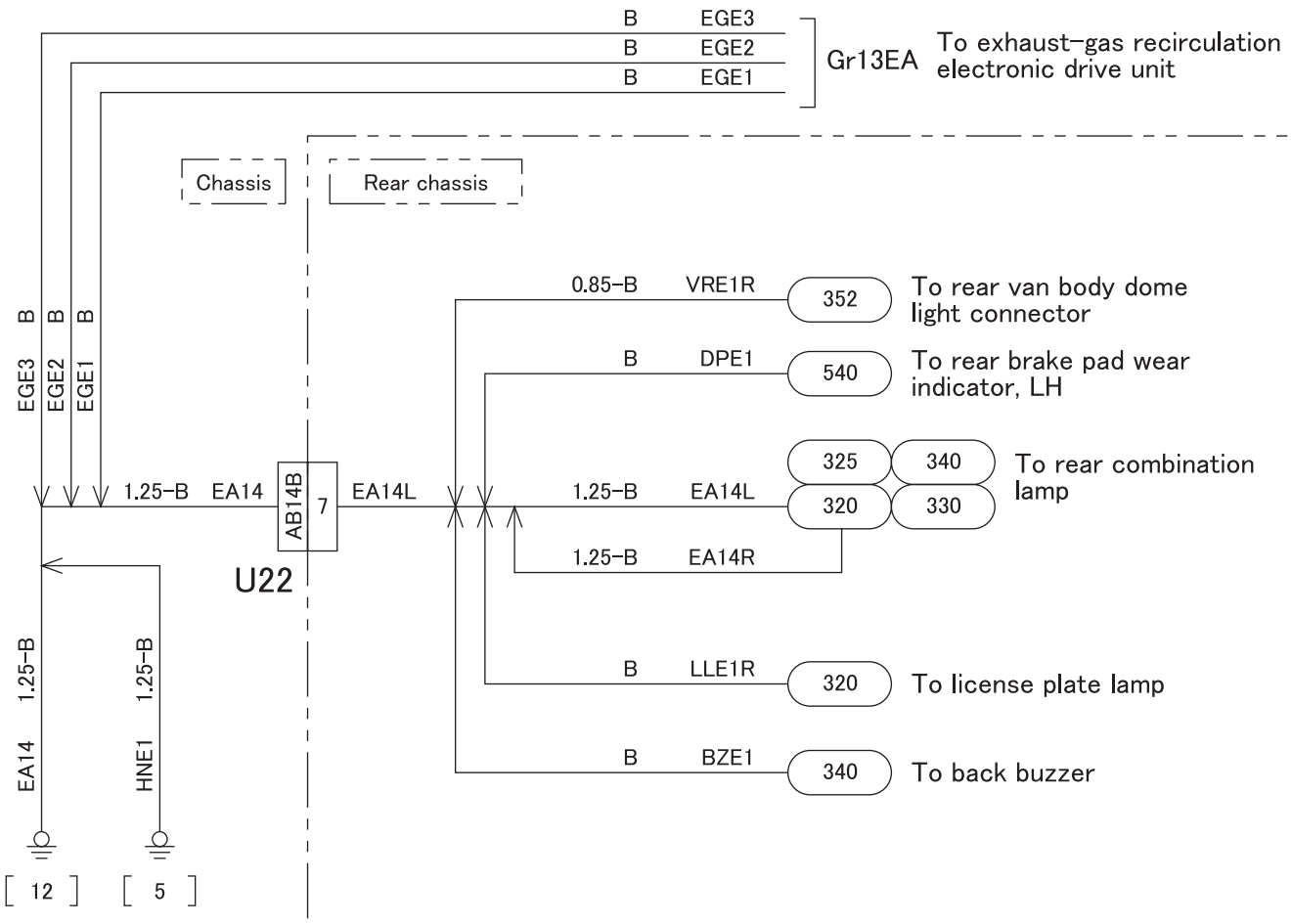

130-C03575

Circuit No.FWE1 chassis ground
<FG>

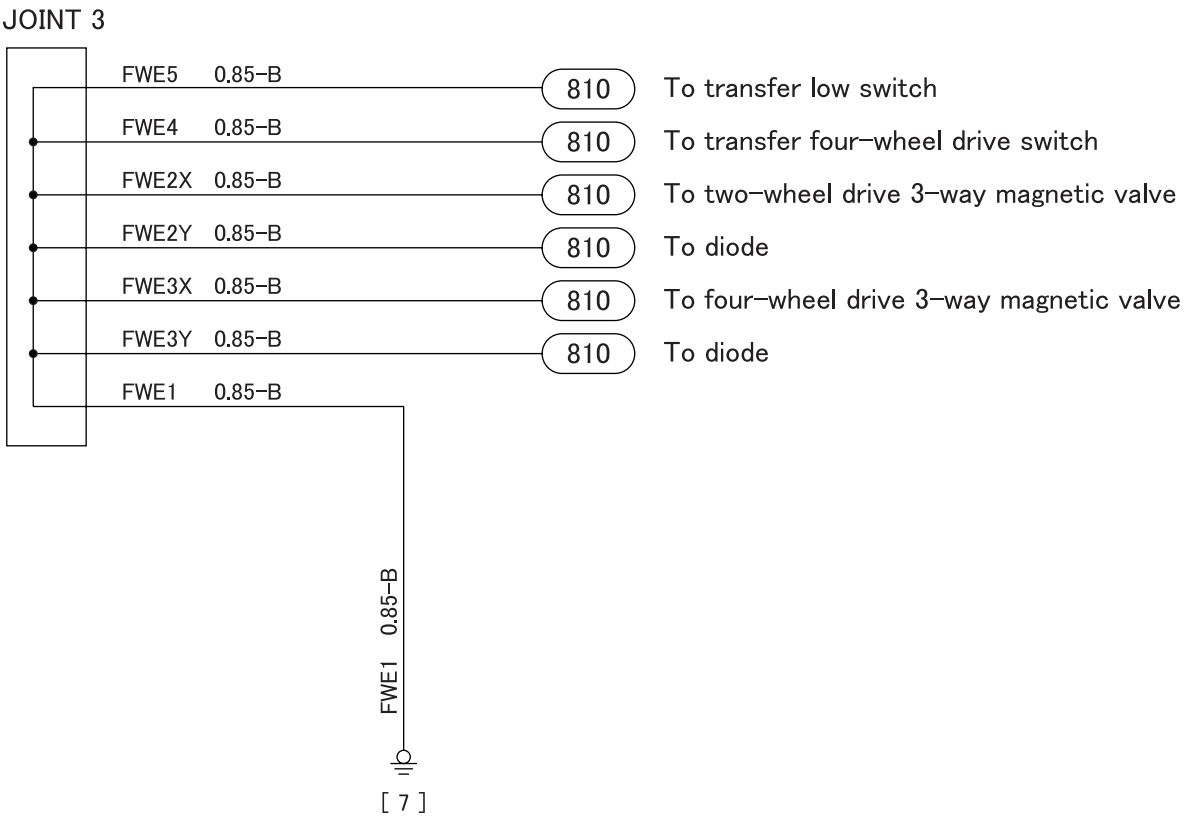

54-02 STARTING, STOPPING AND PREHEATING CIRCUIT

210 ENGINE STARTING CIRCUIT

<Manual transmission>

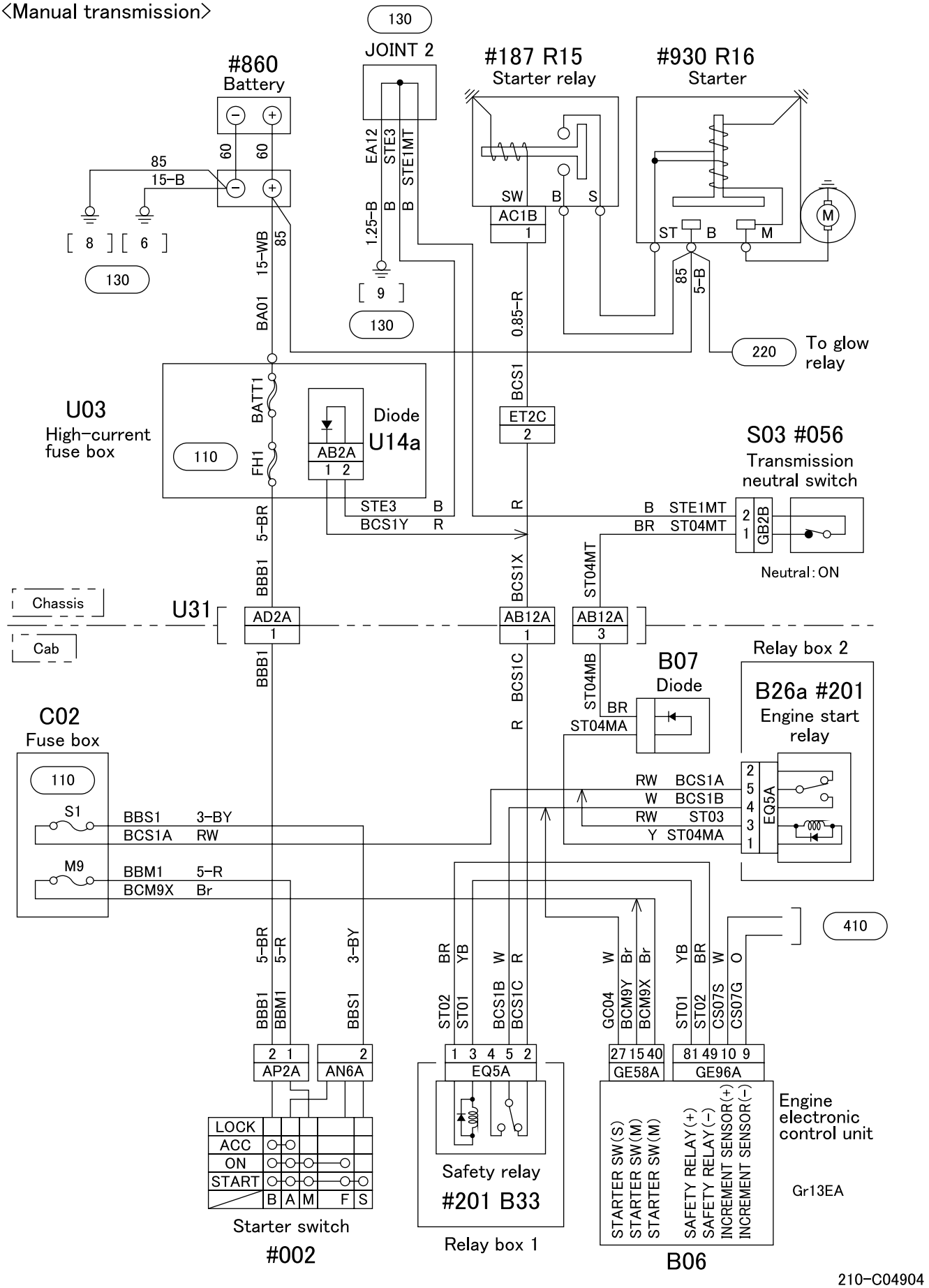

210-C04904

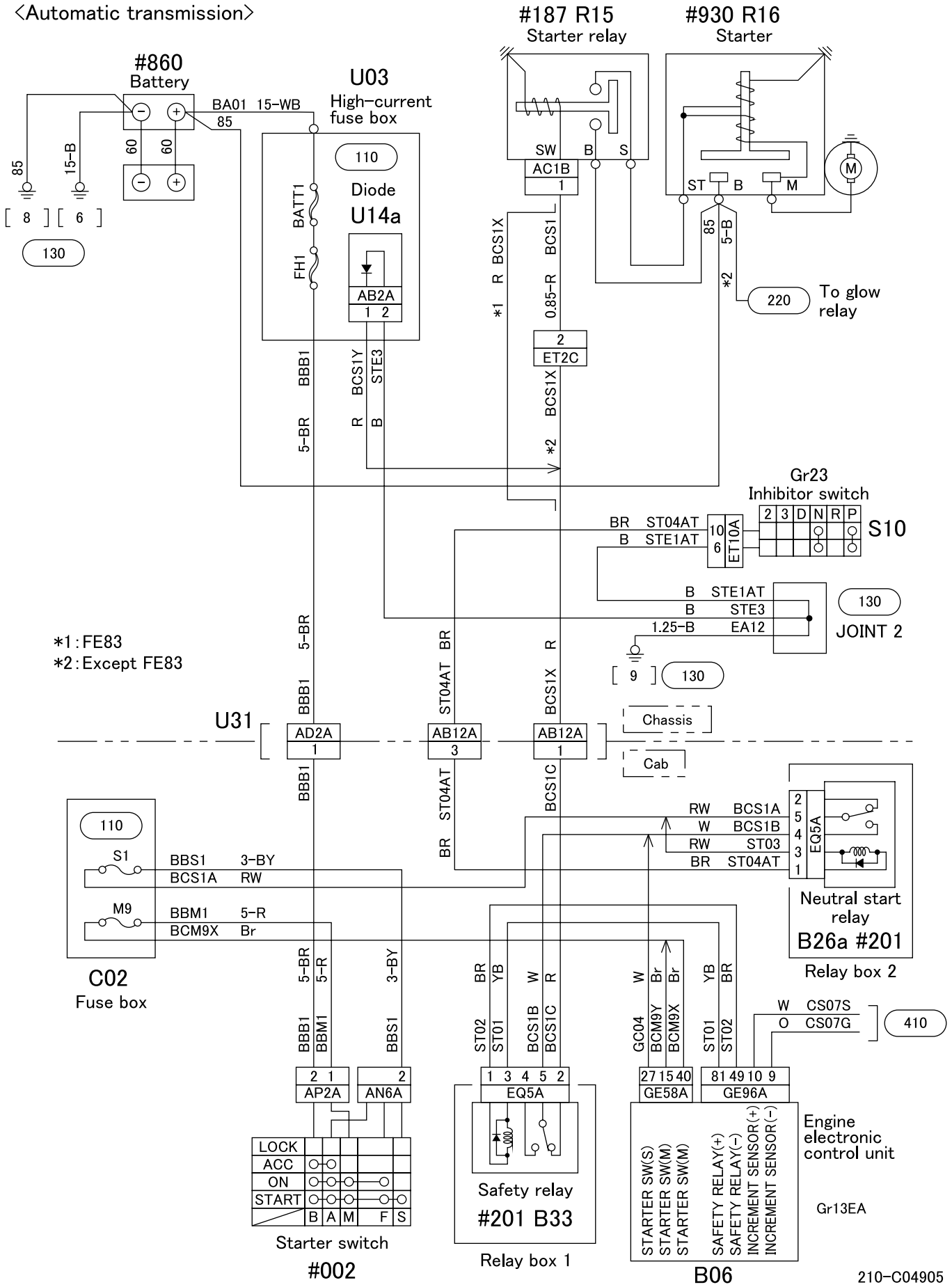
<Automatic transmission>
#860
Battery
BA01 15-WB
85
U03
High-current fuse box
110
Diode
U14a
BATT1
FH1
AB2A
1 2
#187 R15
Starter relay
#930 R16
Starter
SW B S
AC1B
1
ST B M
85
5-B
*2
220
To glow relay
*1 R BCS1X
0.85-R BCS1
2
ET2C
BCS1X
*2
BBB1
5-BR
BCS1Y
STE3
R
B
Gr23
Inhibitor switch
2 3 D N R P
S10
BR ST04AT
B STE1AT
10
6
ET10A
B STE1AT
B STE3
1.25-B EA12
130
JOINT 2
[9]
130
*1:FE83
*2:Except FE83
U31
AD2A
1
AB12A
3
AB12A
1
Chassis
Cab
BBB1
ST04AT
BCS1X
BCS1C
110
S1
BBS1 3-BY
BCS1A RW
M9
BBM1 5-R
BCM9X Br
C02
Fuse box
RW BCS1A
W BCS1B
RW ST03
BR ST04AT
2 5 4 3 1
EQ5A
Neutral start relay
B26a #201
Relay box 2
W CS07S
O CS07G
410
5-BR
5-R
3-BY
BBB1
BBM1
BBS1
2 1
AP2A
2
AN6A
BR YB W R
ST02 ST01 BCS1B BCS1C
1 3 4 5 2
EQ5A
W Br Br
GC04 BCM9Y BCM9X
27 15 40
GE58A
YB BR
ST01 ST02
81 49 10 9
GE96A
LOCK
ACC
ON
START
B A M F S
Starter switch
#002
Safety relay
#201 B33
Relay box 1
STARTER SW(S)
STARTER SW(M)
STARTER SW(M)
SAFETY RELAY(+)
SAFETY RELAY(-)
INCREMENT SENSOR(+)
INCREMENT SENSOR(-)
B06
Engine electronic control unit
Gr13EA

210-C04905

220 ENGINE PREHEATING CIRCUIT

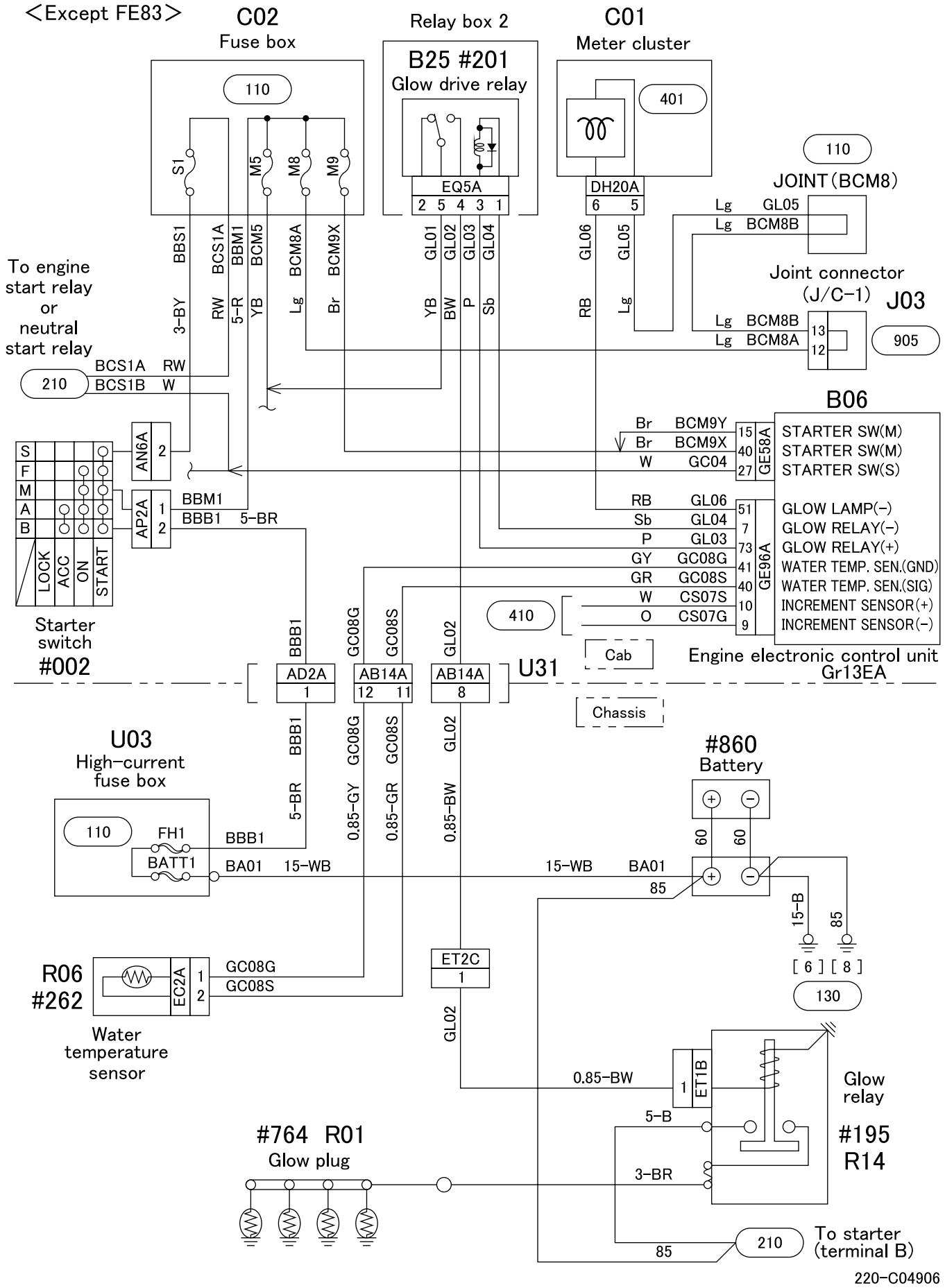

220-C04906

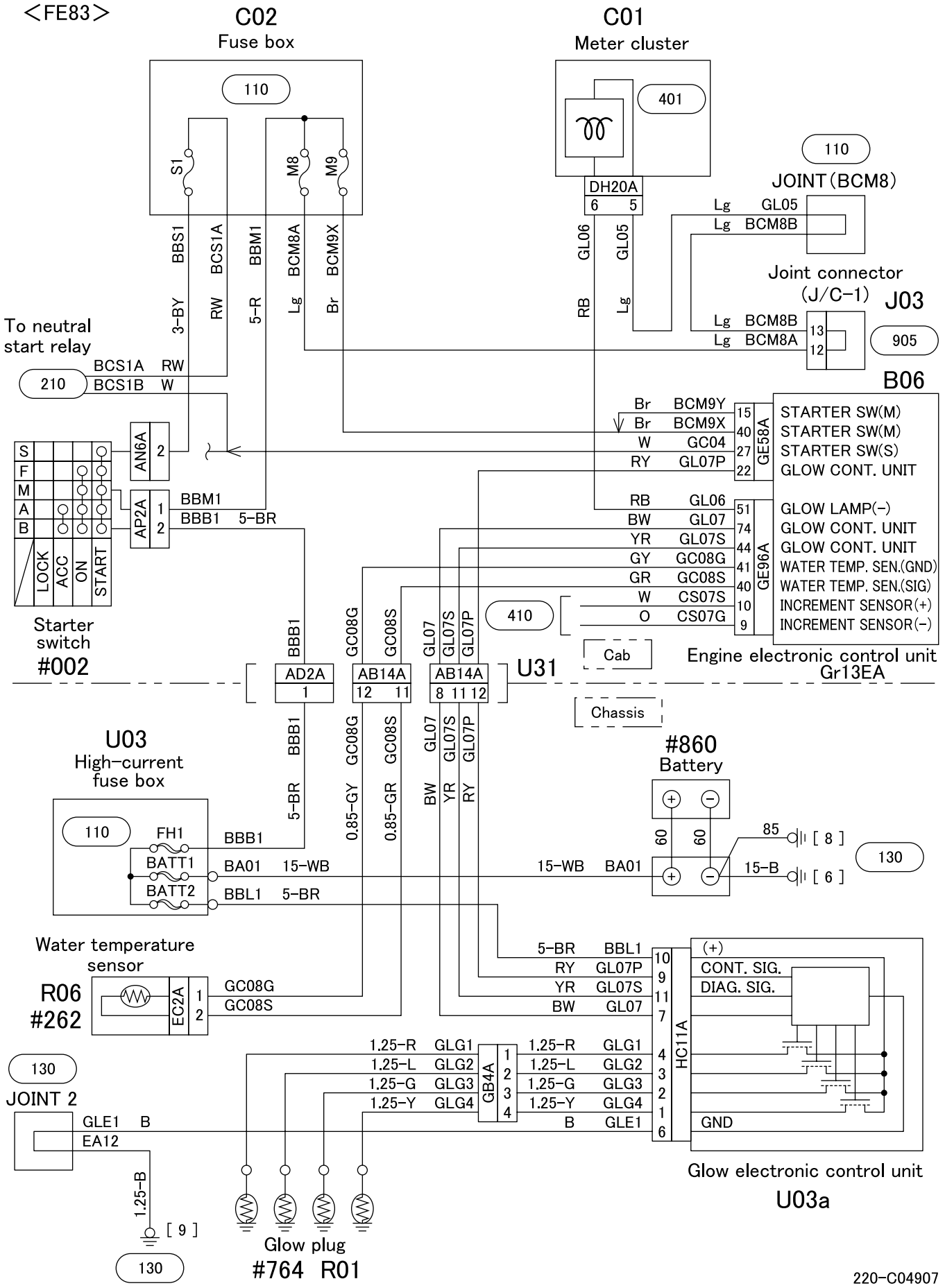
<FE83>
C02
Fuse box
110
S1
M8
M9
BBS1
BCS1A
BBM1
BCM8A
BCM9X
3-BY
RW
5-R
Lg
Br
C01
Meter cluster
401
DH20A
6 5
GL06
GL05
RB
Lg
110
JOINT (BCM8)
Lg GL05
Lg BCM8B
Joint connector
(J/C-1)
J03
Lg BCM8B 13
Lg BCM8A 12
905
To neutral
start relay
BCS1A RW
210
BCS1B W
B06
Br BCM9Y 15
Br BCM9X 40
W GC04 27
RY GL07P 22
GE58A
STARTER SW(M)
STARTER SW(M)
STARTER SW(S)
GLOW CONT. UNIT
RB GL06 51
BW GL07 74
YR GL07S 44
GY GC08G 41
GR GC08S 40
W CS07S 10
O CS07G 9
GE96A
GLOW LAMP(-)
GLOW CONT. UNIT
GLOW CONT. UNIT
WATER TEMP. SEN.(GND)
WATER TEMP. SEN.(SIG)
INCREMENT SENSOR(+)
INCREMENT SENSOR(-)
AN6A 2
AP2A 1
2
BBM1
BBB1 5-BR
S
F
M
A
B
LOCK
ACC
ON
START
Starter
switch
#002
410
Cab
Engine electronic control unit
Gr13EA
AD2A 1
AB14A 12 11
AB14A 8 11 12
U31
Chassis
BBB1
GC08G
GC08S
GL07
GL07S
GL07P
U03
High-current
fuse box
110
FH1
BATT1
BATT2
BBB1
BA01 15-WB
BBL1 5-BR
5-BR
0.85-GY
0.85-GR
BW
YR
RY
#860
Battery
60
60
85
[8]
15-WB BA01
15-B
[6]
130
Water temperature
sensor
R06
#262
EC2A 1
2
GC08G
GC08S
5-BR BBL1
RY GL07P
YR GL07S
BW GL07
HC11A
10
9
11
7
4
3
2
1
6
(+)
CONT. SIG.
DIAG. SIG.
GND
1.25-R GLG1
1.25-L GLG2
1.25-G GLG3
1.25-Y GLG4
GB4A
1
2
3
4
130
JOINT 2
GLE1 B
EA12
1.25-B
[9]
130
Glow plug
#764 R01
Glow electronic control unit
U03a

220-C04907

54-03 LIGHTING CIRCUIT

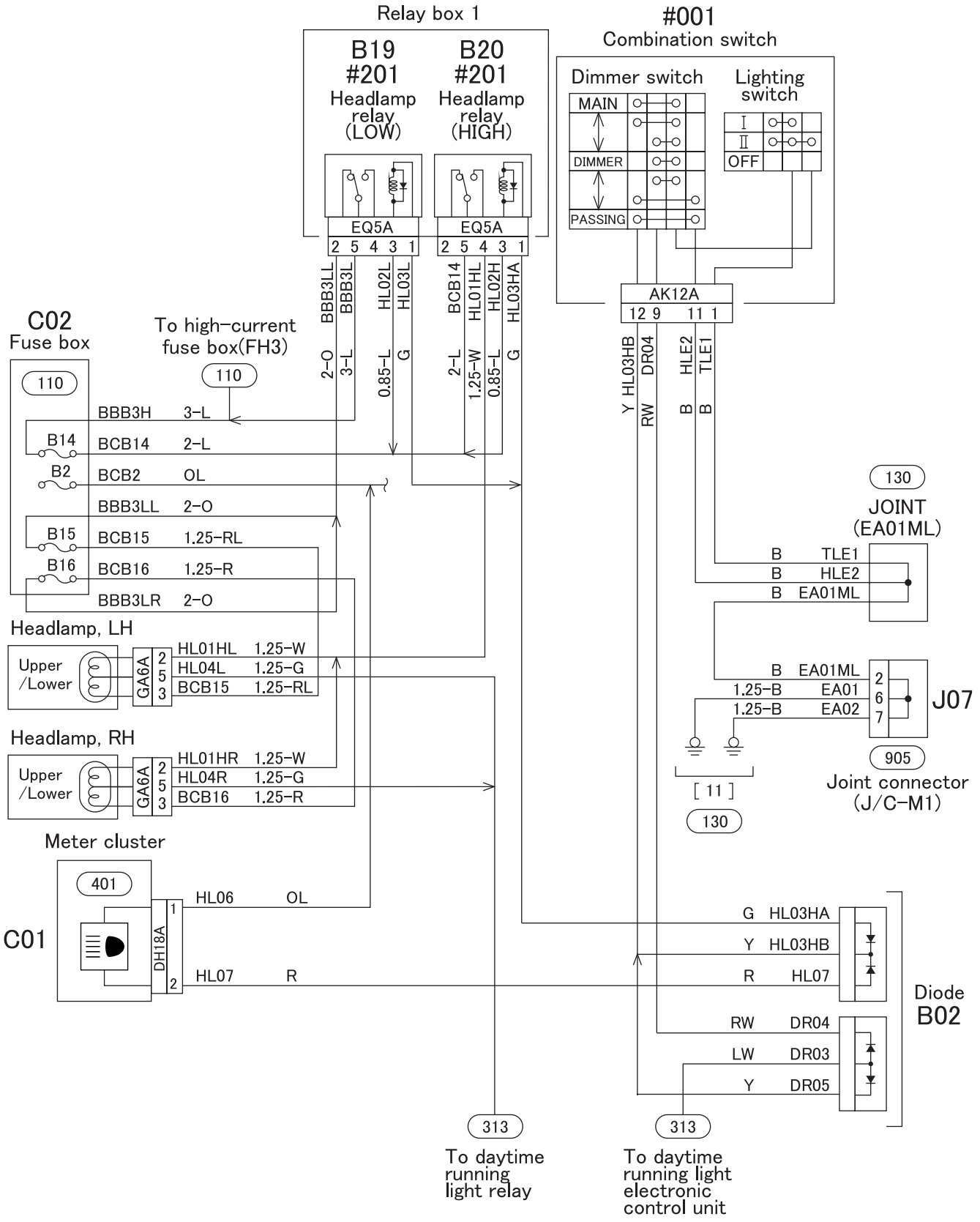
Relay box 1
B19
#201
Headlamp relay (LOW)
B20
#201
Headlamp relay (HIGH)
EQ5A
2 5 4 3 1
#001
Combination switch
Dimmer switch
Lighting switch
MAIN
DIMMER
PASSING
I
II
OFF
AK12A
12 9 11 1
C02
Fuse box
110
To high-current fuse box(FH3)
BBB3H 3-L
B14 BCB14 2-L
B2 BCB2 OL
BBB3LL 2-O
B15 BCB15 1.25-RL
B16 BCB16 1.25-R
BBB3LR 2-O
Headlamp, LH
Upper /Lower
GA6A
HL01HL 1.25-W
HL04L 1.25-G
BCB15 1.25-RL
Headlamp, RH
HL01HR 1.25-W
HL04R 1.25-G
BCB16 1.25-R
Meter cluster
C01
401
DH18A
HL06 OL
HL07 R
130
JOINT (EA01ML)
B TLE1
B HLE2
B EA01ML
B EA01ML
1.25-B EA01
1.25-B EA02
J07
905
Joint connector (J/C-M1)
[11]
130
G HL03HA
Y HL03HB
R HL07
Diode B02
RW DR04
LW DR03
Y DR05
313
To daytime running light relay
313
To daytime running light electronic control unit

310-C03580

M E M O

313 DAYTIME RUNNING LIGHT CIRCUIT

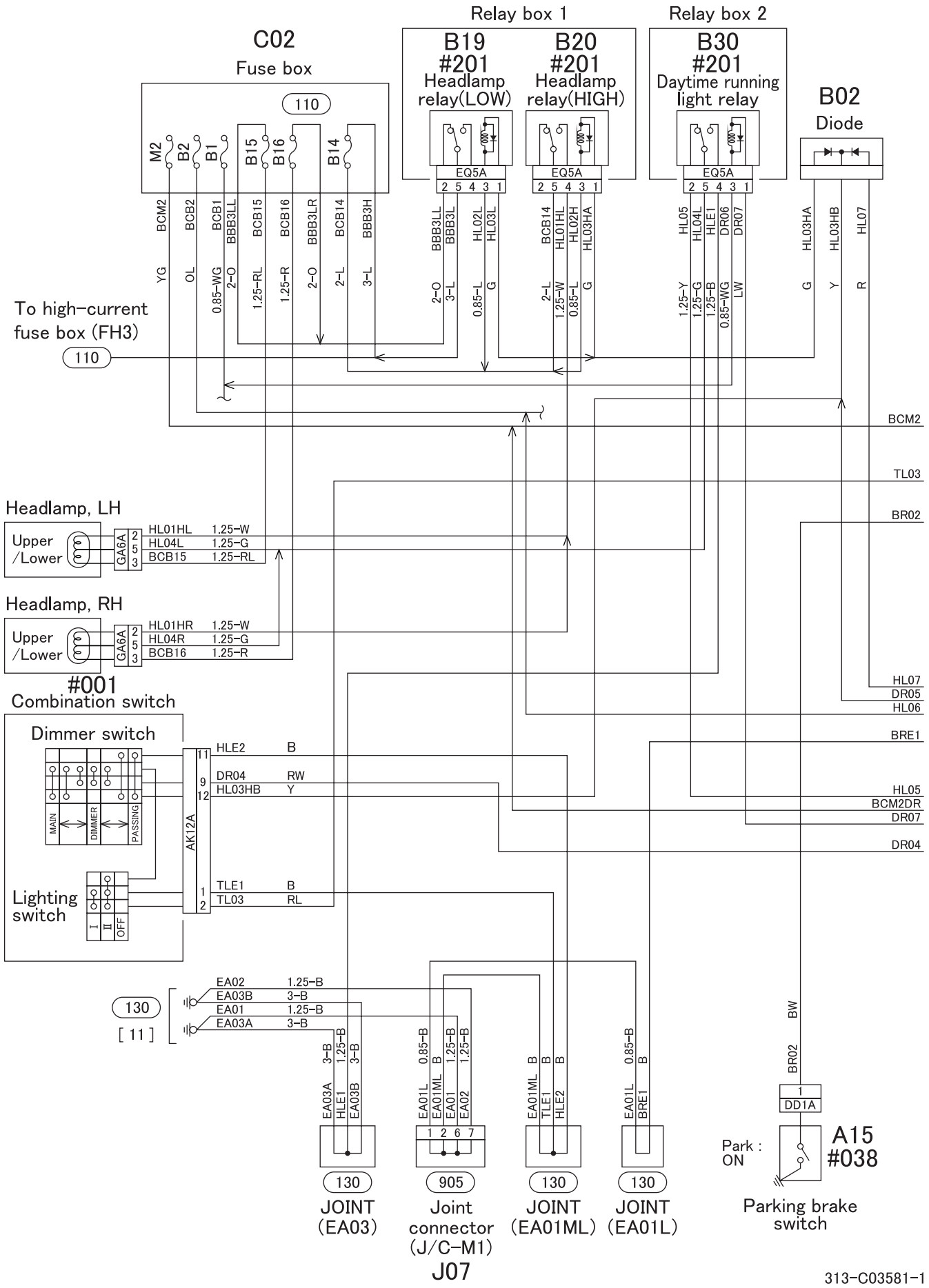

313-C03581-1

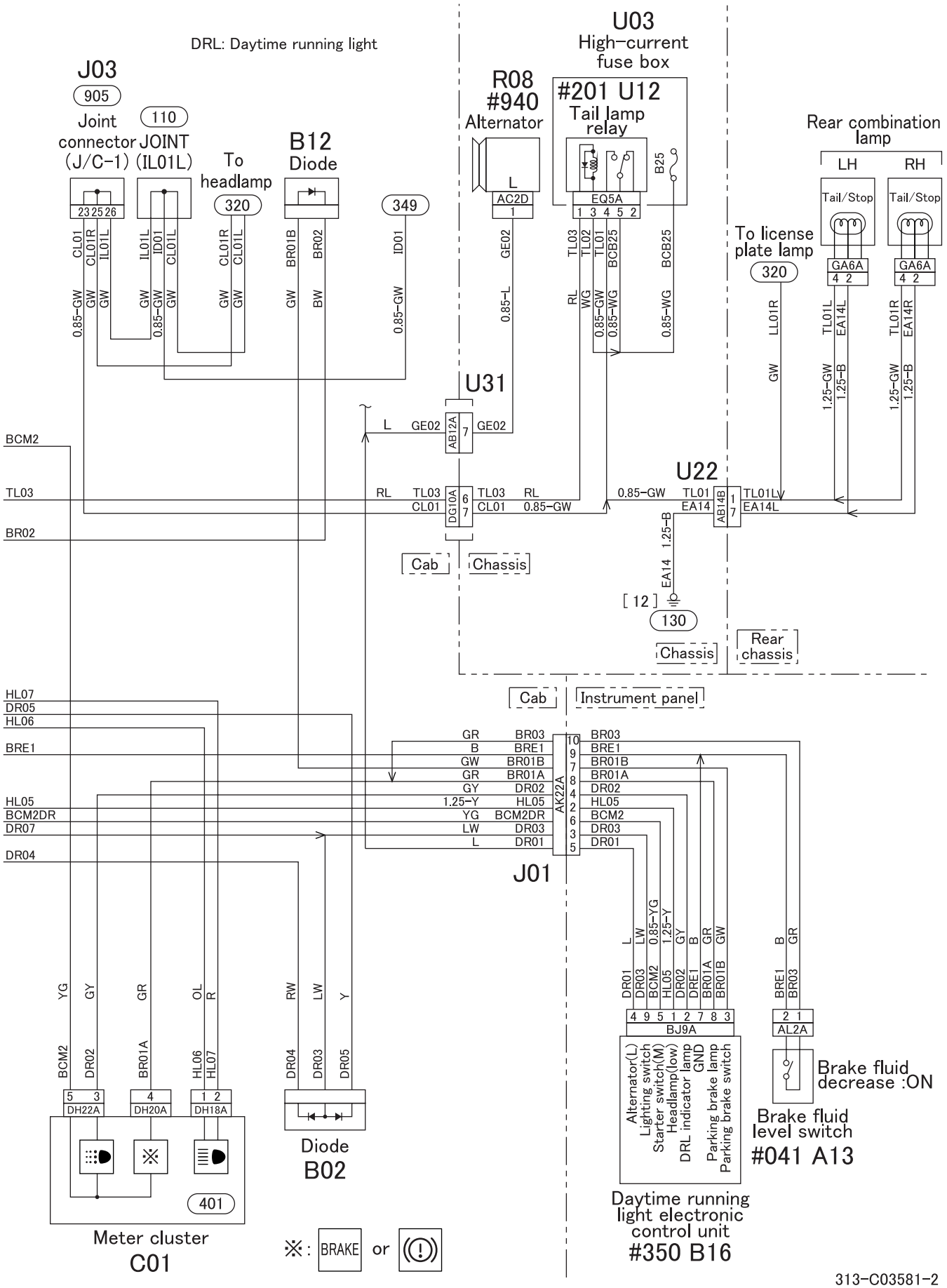
DRL: Daytime running light
J03
905
Joint connector (J/C-1)
110
JOINT (IL01L)
To headlamp
320
B12
Diode
349
R08
#940
Alternator
U03
High-current fuse box
#201 U12
Tail lamp relay
B25
Rear combination lamp
LH
RH
Tail/Stop
GA6A
To license plate lamp
320
U31
U22
BCM2
TL03
BR02
Cab
Chassis
[12]
130
Rear chassis
HL07
DR05
HL06
BRE1
HL05
BCM2DR
DR07
DR04
Instrument panel
J01
AK22A
BJ9A
AL2A
DH22A
DH20A
DH18A
401
Meter cluster
C01
Diode
B02
※: BRAKE or
Alternator(L)
Lighting switch
Starter switch(M)
Headlamp(low)
DRL indicator lamp
GND
Parking brake lamp
Parking brake switch
Daytime running light electronic control unit
#350 B16
Brake fluid decrease :ON
Brake fluid level switch
#041 A13

313-C03581-2

320 TAIL, CLEARANCE AND LICENSE PLATE LAMPS CIRCUIT

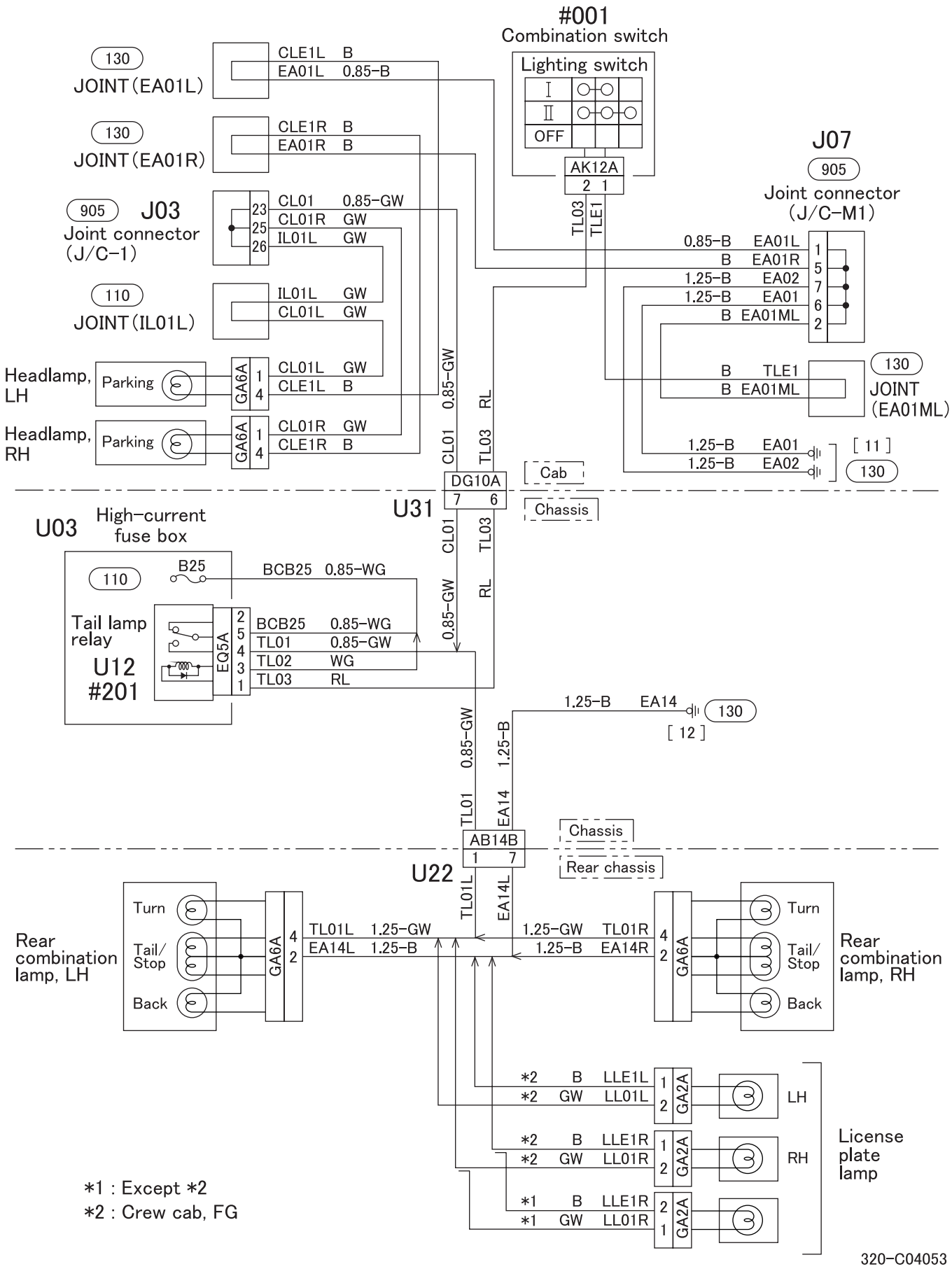

M E M O

<Without auto cruise>

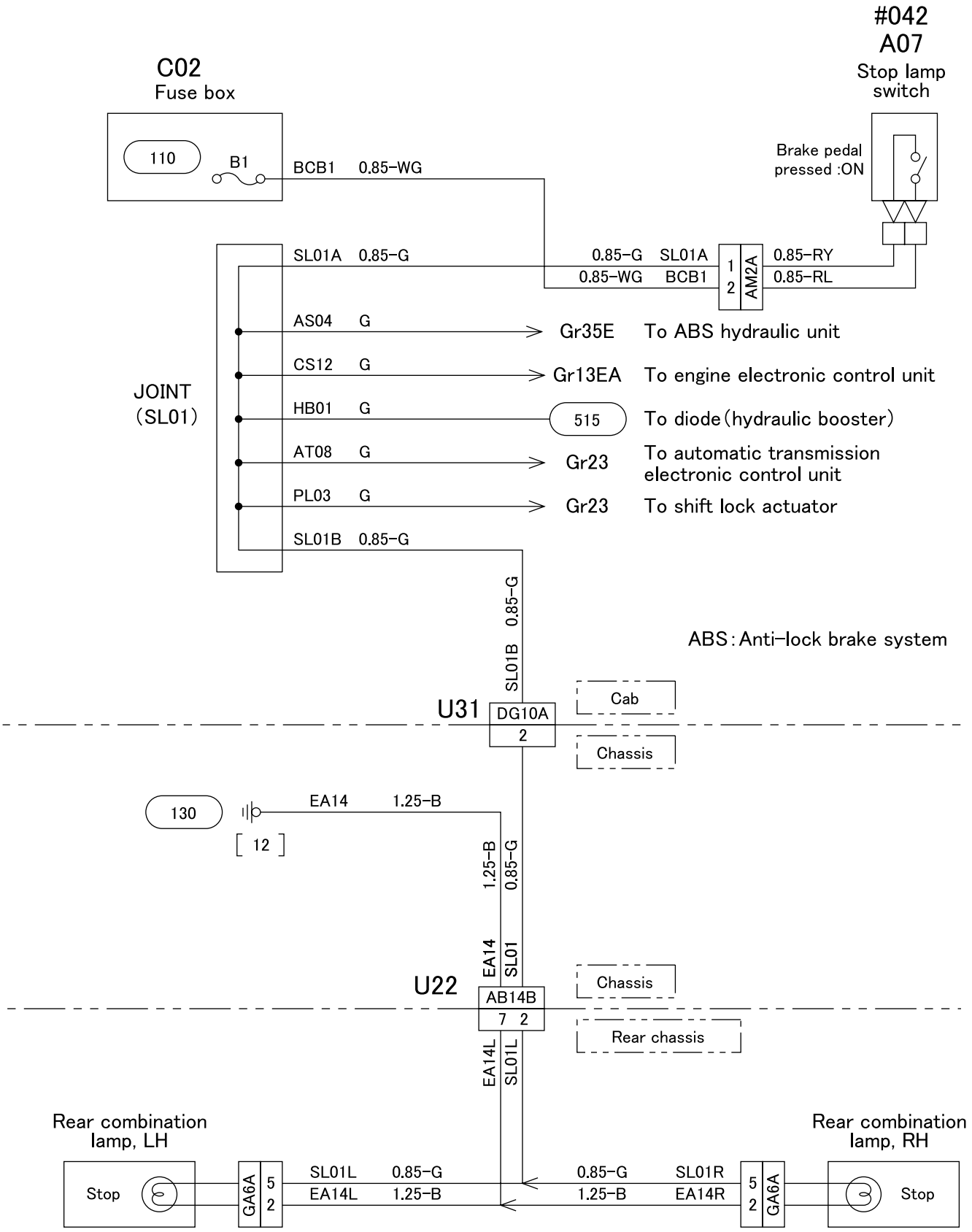

325-C03583

<With auto cruise>

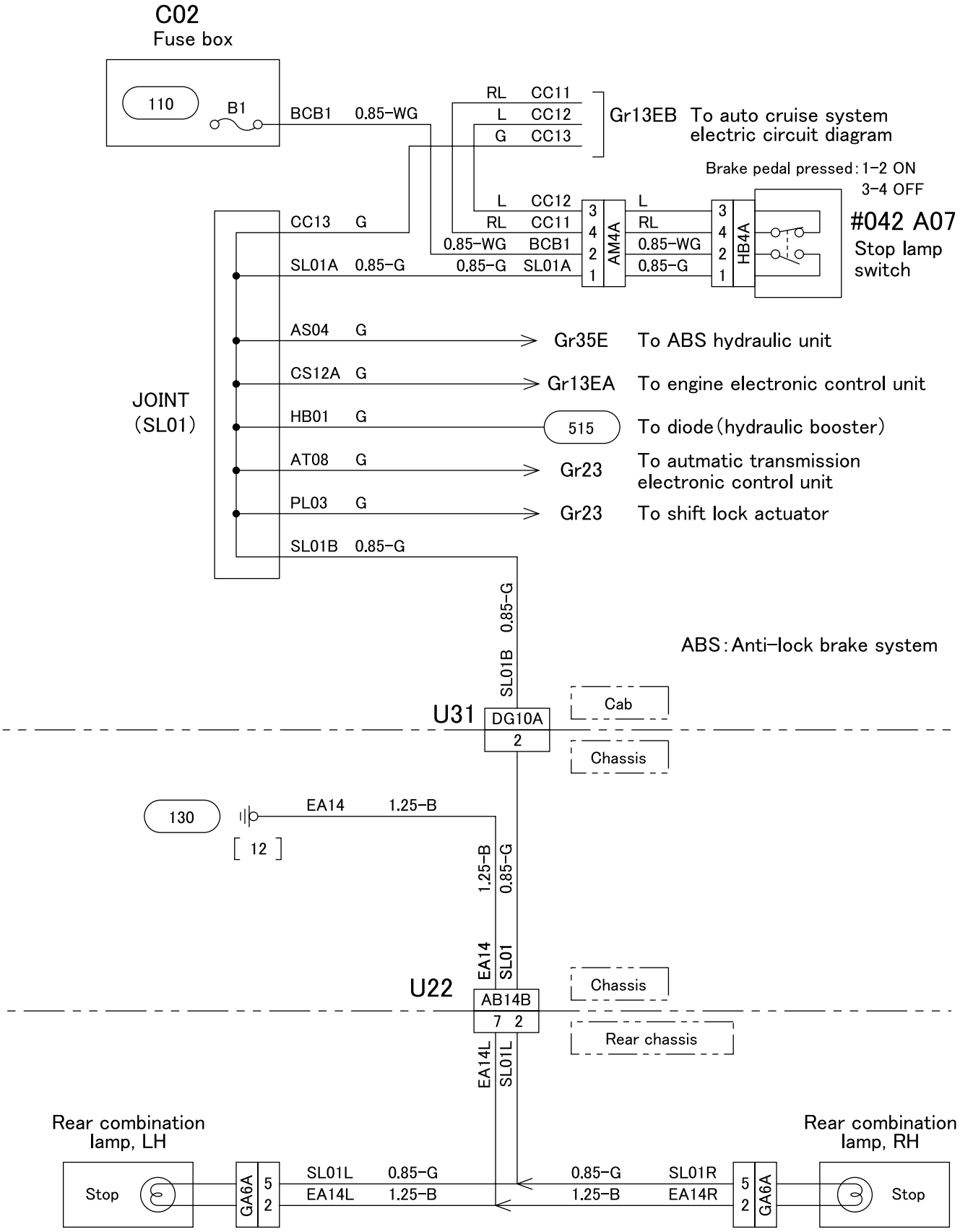

325-C03584

330 TURN SIGNAL AND HAZARD LAMP CIRCUIT

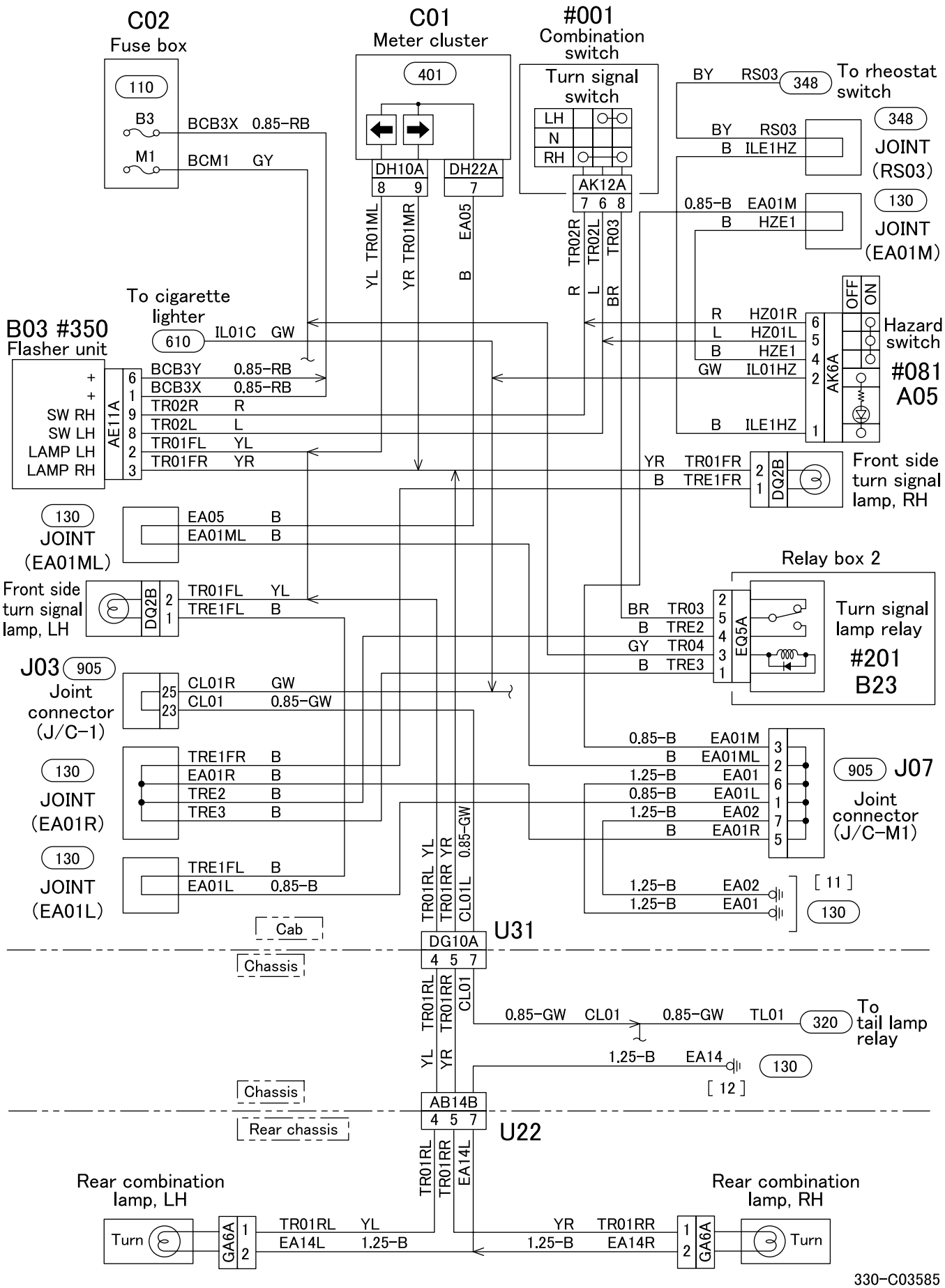

330-C03585

M E M O

340 BACKUP LAMP CIRCUIT

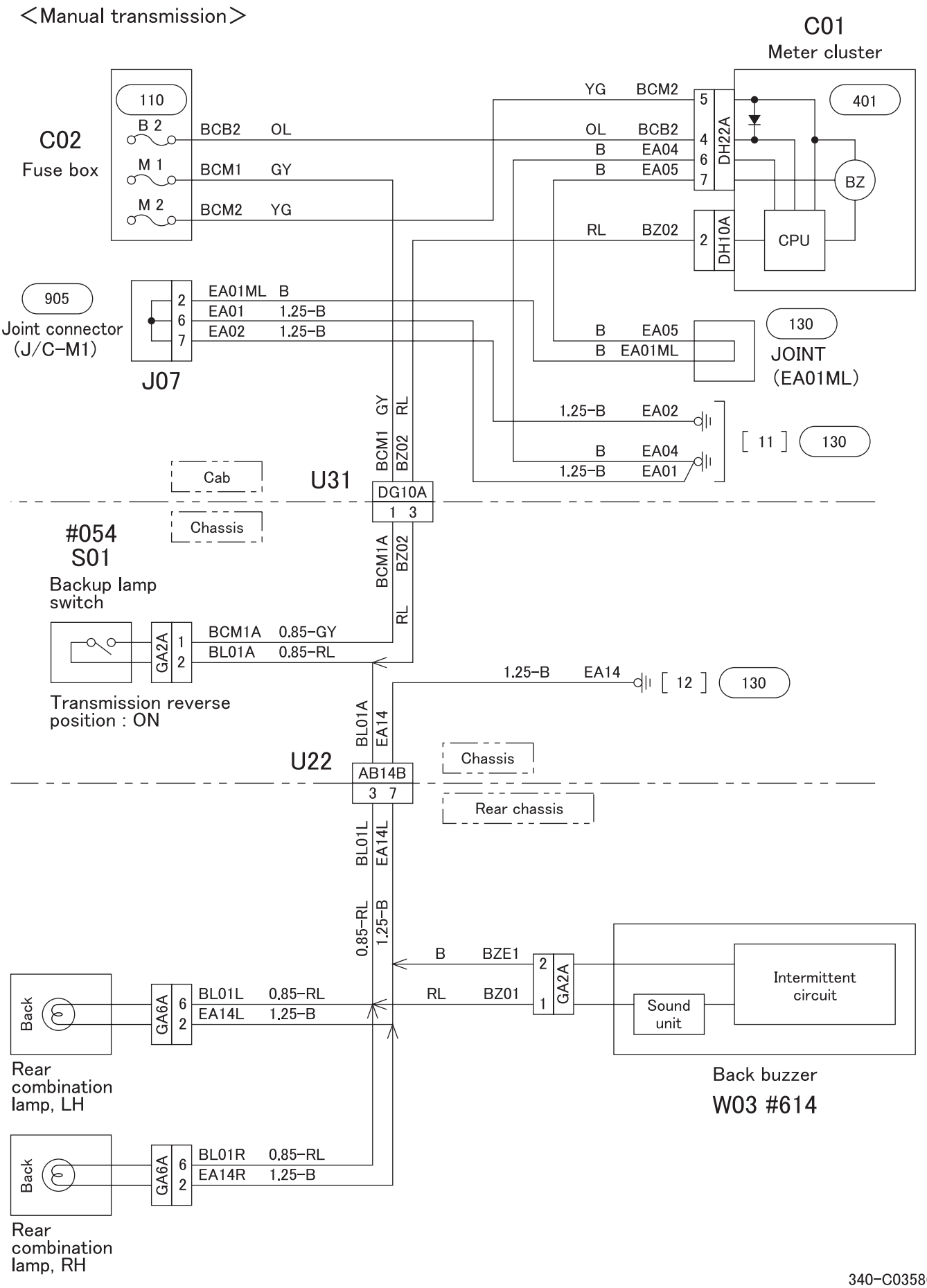

340-C03586

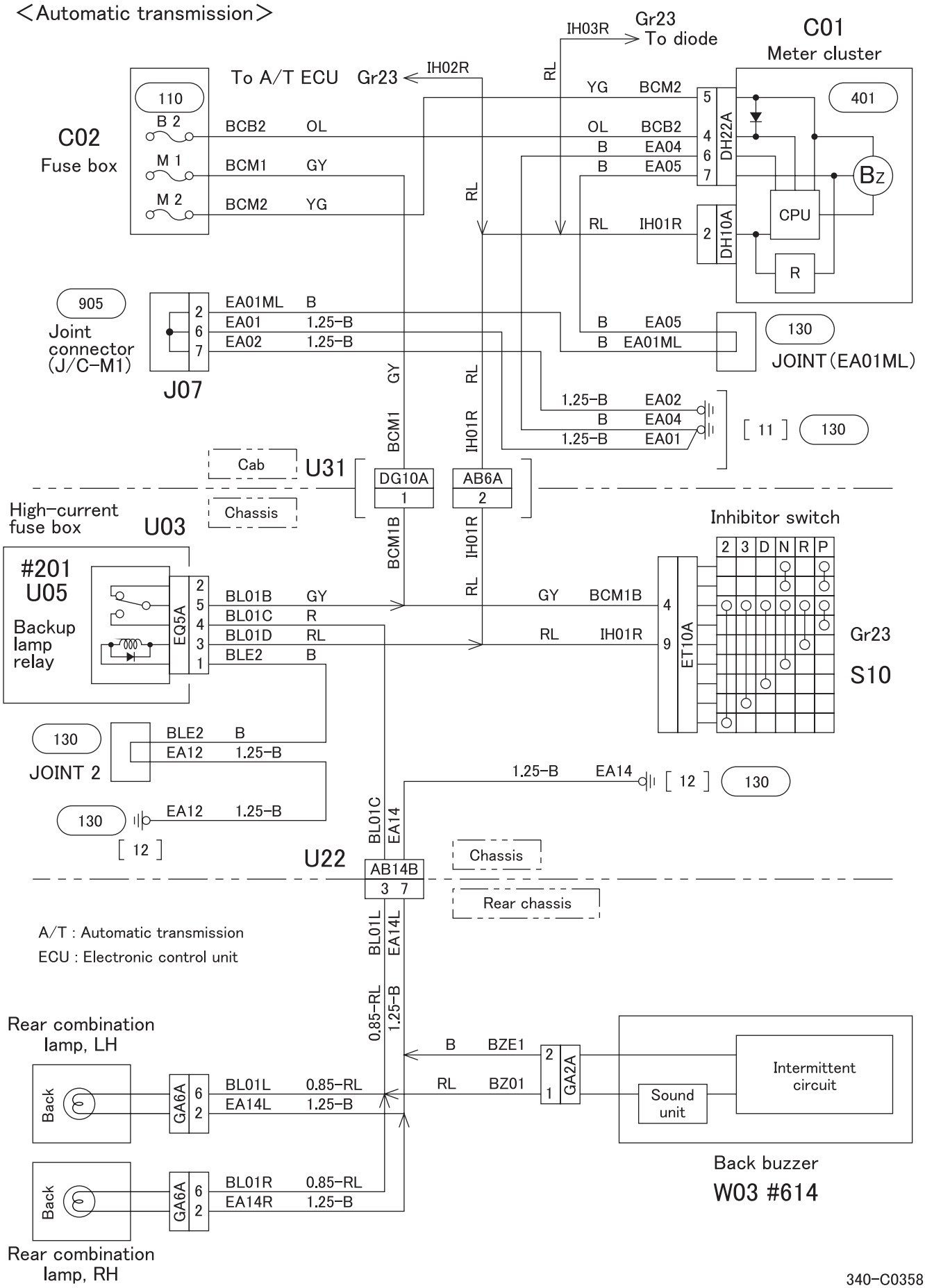
<Automatic transmission>
C01
Meter cluster
401
Bz
CPU
R
DH22A
DH10A
IH03R
Gr23
To diode
To A/T ECU
Gr23
IH02R
C02
Fuse box
110
B 2
M 1
M 2
BCB2 OL
BCM1 GY
BCM2 YG
YG BCM2
OL BCB2
B EA04
B EA05
RL IH01R
905
Joint connector (J/C-M1)
J07
EA01ML B
EA01 1.25-B
EA02 1.25-B
B EA05
B EA01ML
130
JOINT (EA01ML)
1.25-B EA02
B EA04
1.25-B EA01
11
130
Cab
Chassis
U31
DG10A
1
AB6A
2
BCM1
IH01R
High-current fuse box
U03
#201
U05
Backup lamp relay
EQ5A
BL01B GY
BL01C R
BL01D RL
BLE2 B
GY BCM1B
RL IH01R
ET10A
Inhibitor switch
2 3 D N R P
Gr23
S10
130
JOINT 2
BLE2 B
EA12 1.25-B
130
12
EA12 1.25-B
1.25-B EA14
12
130
BL01C
EA14
U22
AB14B
3 7
Chassis
Rear chassis
BL01L
EA14L
0.85-RL
1.25-B
A/T : Automatic transmission
ECU : Electronic control unit
Rear combination lamp, LH
Back
GA6A
BL01L 0.85-RL
EA14L 1.25-B
B BZE1
RL BZ01
GA2A
Intermittent circuit
Sound unit
Back buzzer
W03 #614
Back
GA6A
BL01R 0.85-RL
EA14R 1.25-B
Rear combination lamp, RH

340-C03587

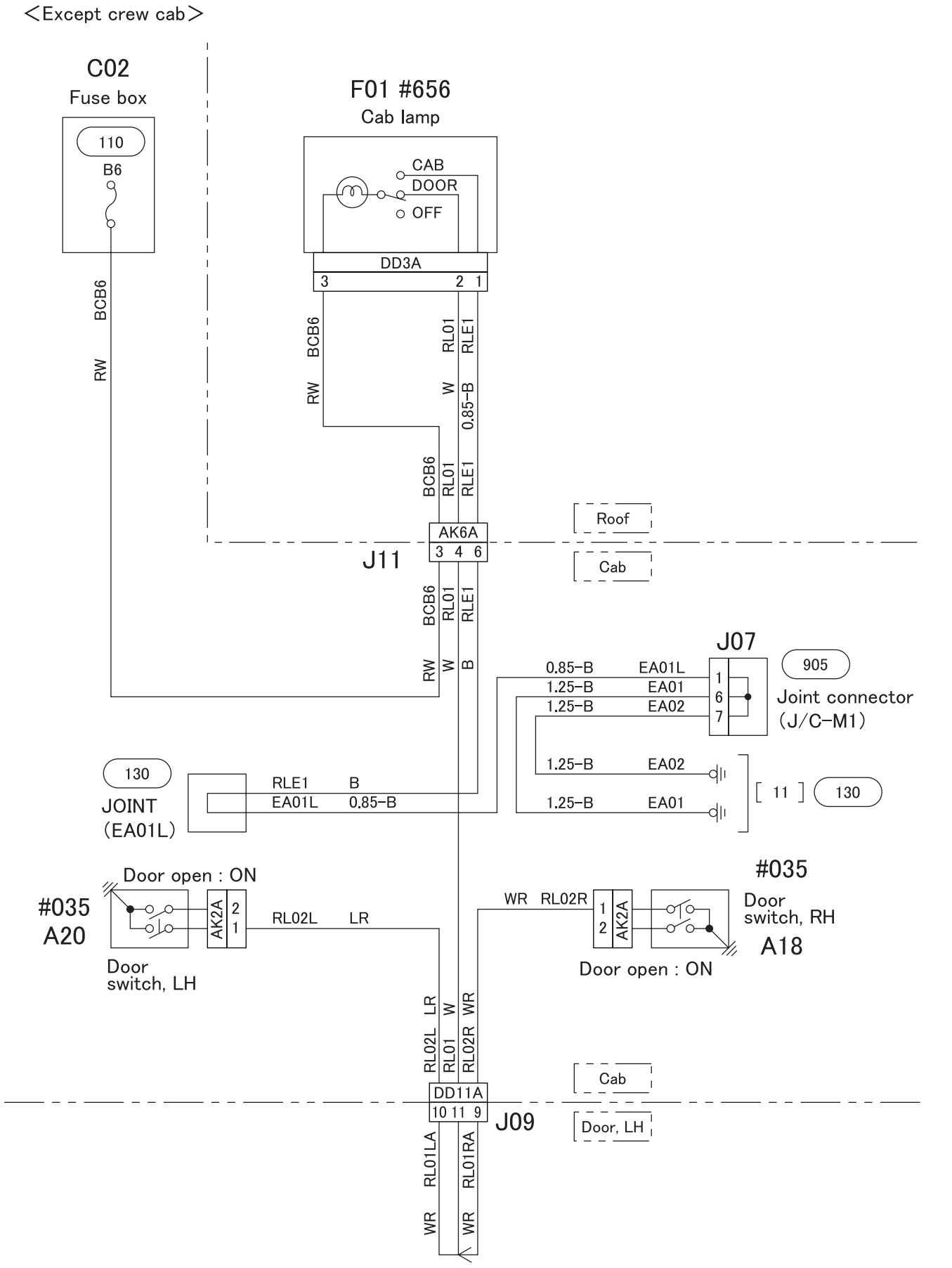
<Except crew cab>
C02
Fuse box
110
B6
F01 #656
Cab lamp
CAB
DOOR
OFF
DD3A
3
2 1
BCB6
RW
RL01
W
RLE1
0.85-B
AK6A
3 4 6
J11
Roof
Cab
J07
905
Joint connector
(J/C-M1)
0.85-B EA01L
1.25-B EA01
1.25-B EA02
1
6
7
130
JOINT
(EA01L)
RLE1 B
EA01L 0.85-B
11
#035
A20
Door open : ON
Door
switch, LH
AK2A
RL02L LR
WR RL02R
#035
Door
switch, RH
A18
Door open : ON
RL02L
RL02R
DD11A
10 11 9
J09
Door, LH
RL01LA
RL01RA
WR

345-C04054

＜Crew cab＞

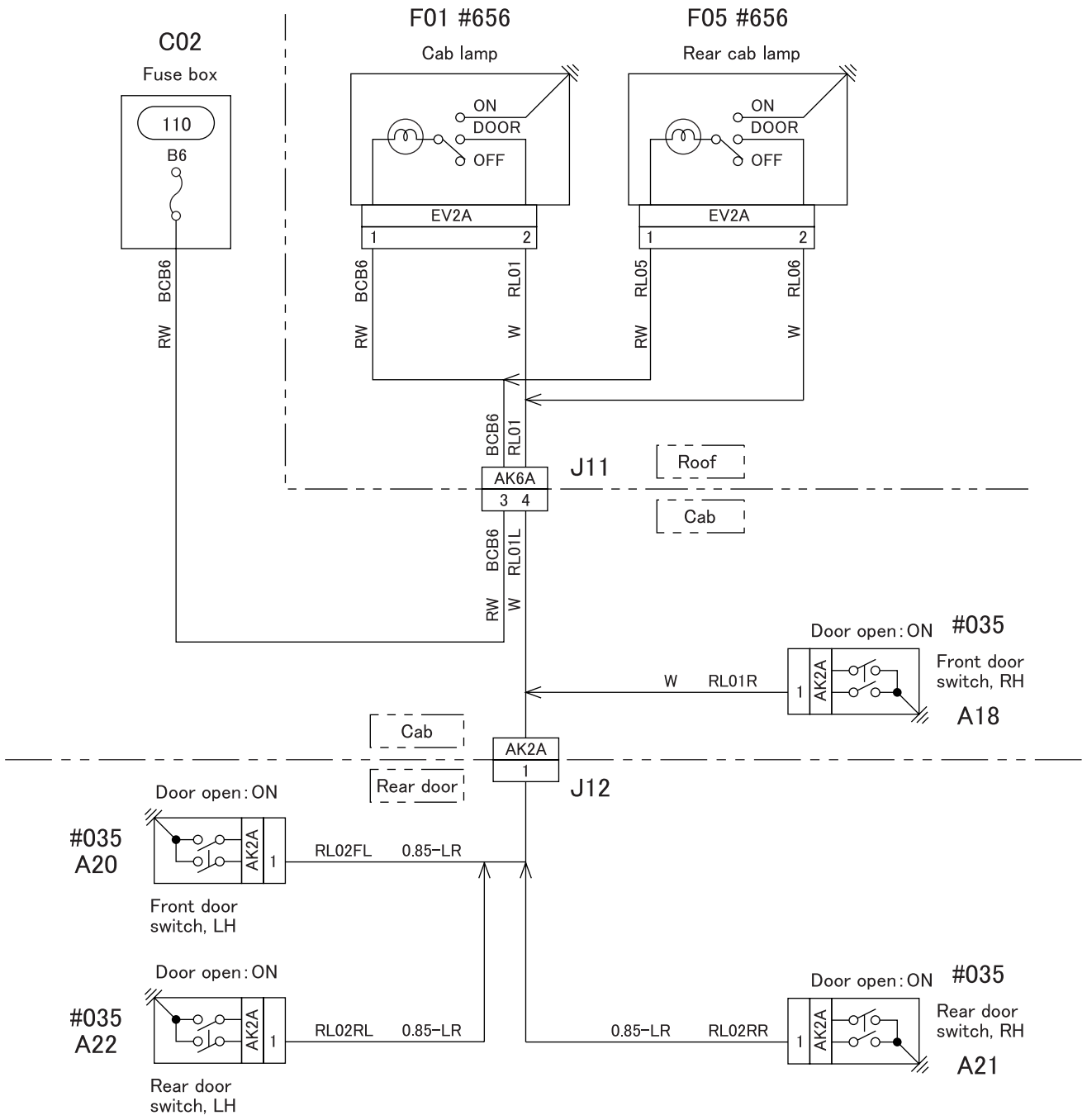
C02
Fuse box
110
B6
F01 #656
Cab lamp
ON
DOOR
OFF
EV2A
1
2
F05 #656
Rear cab lamp
ON
DOOR
OFF
EV2A
1
2
BCB6
RW
BCB6
RW
RL01
W
RL05
RW
RL06
W
BCB6
RL01
AK6A
3 4
J11
Roof
Cab
BCB6
RW
RL01L
W
Door open : ON
#035
Front door
switch, RH
A18
W
RL01R
1
AK2A
Cab
AK2A
1
J12
Rear door
Door open : ON
#035
A20
AK2A
1
RL02FL
0.85-LR
Front door
switch, LH
Door open : ON
#035
A22
AK2A
1
RL02RL
0.85-LR
Rear door
switch, LH
0.85-LR
RL02RR
Door open : ON
#035
Rear door
switch, RH
A21
1
AK2A

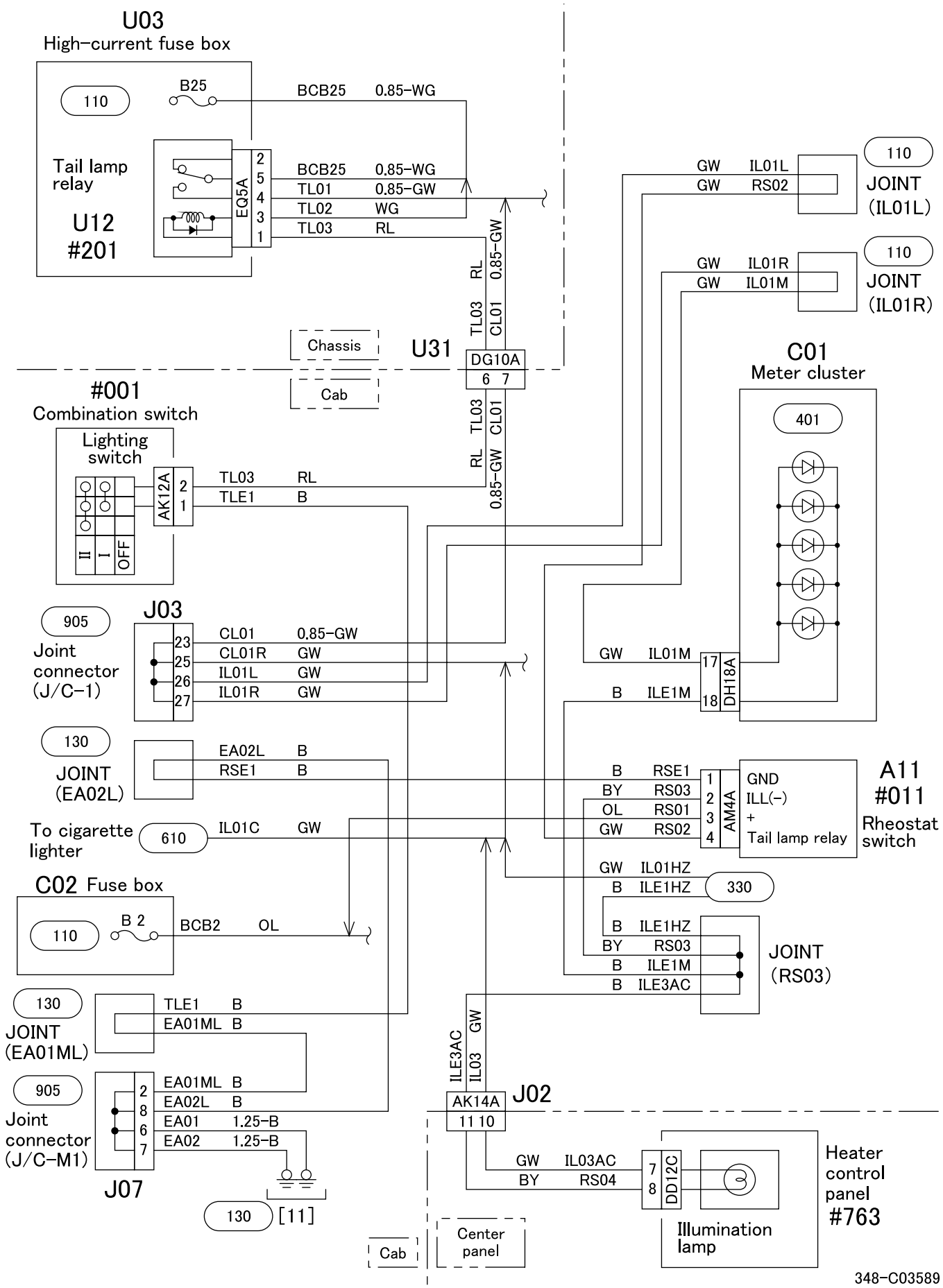
U03
High-current fuse box
110
B25
BCB25 0.85-WG
Tail lamp relay
U12
#201
EQ5A
2
5
4
3
1
BCB25 0.85-WG
TL01 0.85-GW
TL02 WG
TL03 RL
RL 0.85-GW
TL03 CL01
Chassis
Cab
U31
DG10A
6 7
#001
Combination switch
Lighting switch
AK12A
2
1
TL03 RL
TLE1 B
II
I
OFF
905
Joint connector (J/C-1)
J03
23
25
26
27
CL01 0.85-GW
CL01R GW
IL01L GW
IL01R GW
130
JOINT (EA02L)
EA02L B
RSE1 B
To cigarette lighter
610
IL01C GW
C02 Fuse box
110
B 2
BCB2 OL
130
JOINT (EA01ML)
TLE1 B
EA01ML B
905
Joint connector (J/C-M1)
J07
2
8
6
7
EA01ML B
EA02L B
EA01 1.25-B
EA02 1.25-B
130 [11]
GW IL01L
GW RS02
110
JOINT (IL01L)
GW IL01R
GW IL01M
110
JOINT (IL01R)
C01
Meter cluster
401
GW IL01M
B ILE1M
17
18
DH18A
A11
#011
Rheostat switch
B RSE1
BY RS03
OL RS01
GW RS02
1
2
3
4
AM4A
GND
ILL(-)
+
Tail lamp relay
GW IL01HZ
B ILE1HZ
330
B ILE1HZ
BY RS03
B ILE1M
B ILE3AC
JOINT (RS03)
ILE3AC
IL03
GW
AK14A
11 10
J02
GW IL03AC
BY RS04
7
8
DD12C
Heater control panel
#763
Illumination lamp
Cab
Center panel

348-C03589

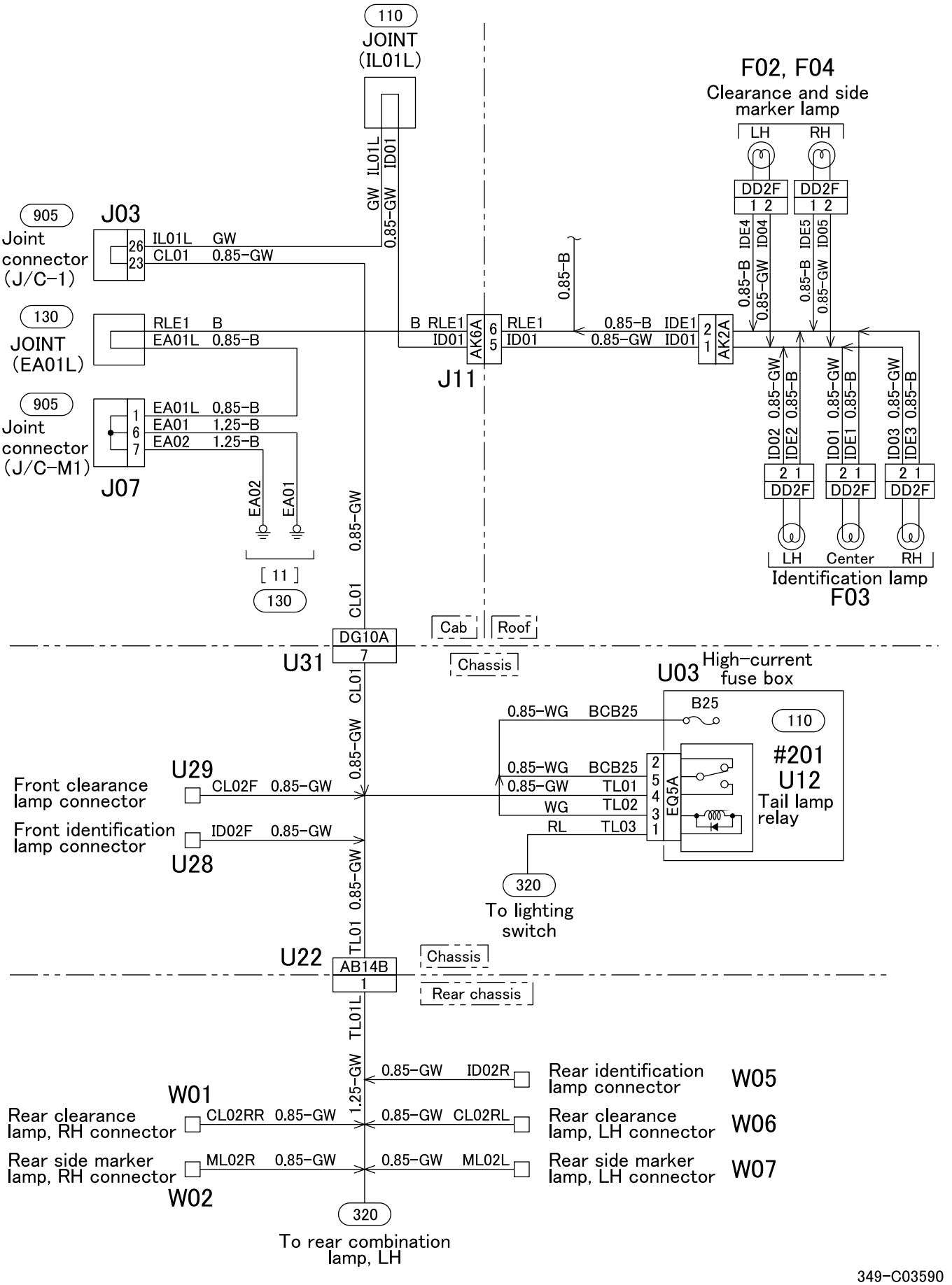
110
JOINT
(IL01L)
F02, F04
Clearance and side marker lamp
LH
RH
DD2F
1 2
905
J03
Joint connector (J/C-1)
26
23
IL01L GW
CL01 0.85-GW
GW IL01L
0.85-GW ID01
130
JOINT
(EA01L)
RLE1 B
EA01L 0.85-B
B RLE1
ID01
AK6A
6
5
RLE1
ID01
0.85-B
0.85-B IDE1
0.85-GW ID01
2
1
AK2A
J11
IDE4 ID04
IDE5 ID05
0.85-B 0.85-GW
905
Joint connector (J/C-M1)
1
6
7
EA01L 0.85-B
EA01 1.25-B
EA02 1.25-B
J07
EA02
EA01
[11]
130
CL01
0.85-GW
ID02 IDE2
ID01 IDE1
ID03 IDE3
2 1
LH
Center
RH
Identification lamp
F03
Cab
Roof
DG10A
7
U31
Chassis
U03
High-current fuse box
B25
110
#201
U12
Tail lamp relay
0.85-WG BCB25
0.85-GW TL01
WG TL02
RL TL03
EQ5A
2
5
4
3
1
U29
Front clearance lamp connector
CL02F 0.85-GW
Front identification lamp connector
ID02F 0.85-GW
U28
320
To lighting switch
TL01 0.85-GW
U22
AB14B
1
Chassis
Rear chassis
TL01L
1.25-GW
0.85-GW ID02R
Rear identification lamp connector
W05
W01
Rear clearance lamp, RH connector
CL02RR 0.85-GW
0.85-GW CL02RL
Rear clearance lamp, LH connector
W06
Rear side marker lamp, RH connector
ML02R 0.85-GW
0.85-GW ML02L
Rear side marker lamp, LH connector
W07
W02
320
To rear combination lamp, LH

349-C03590

352 VAN BODY DOME LIGHT CIRCUIT

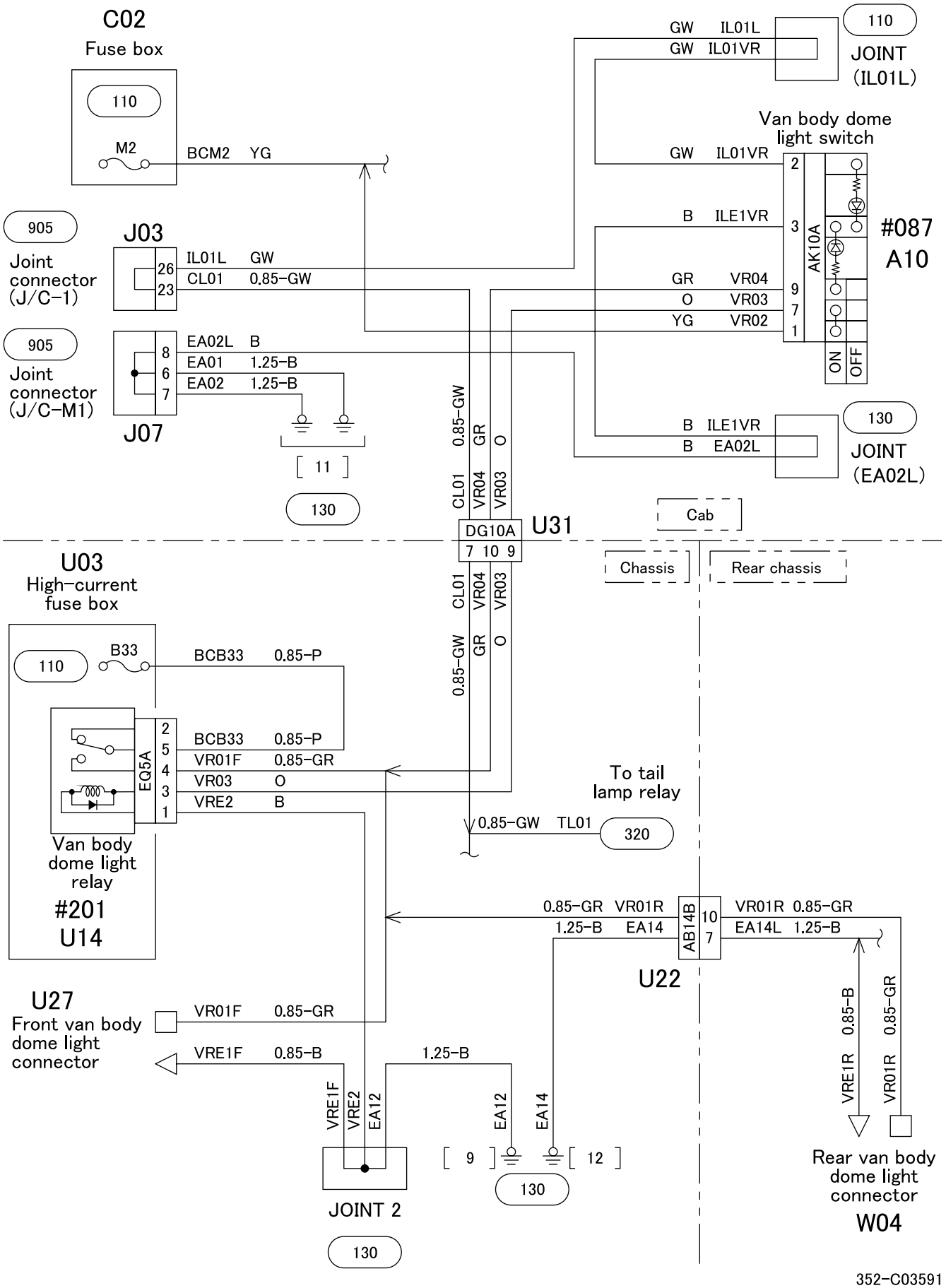

54-04 METER CIRCUIT

401 METER CLUSTER INTERNAL CIRCUIT

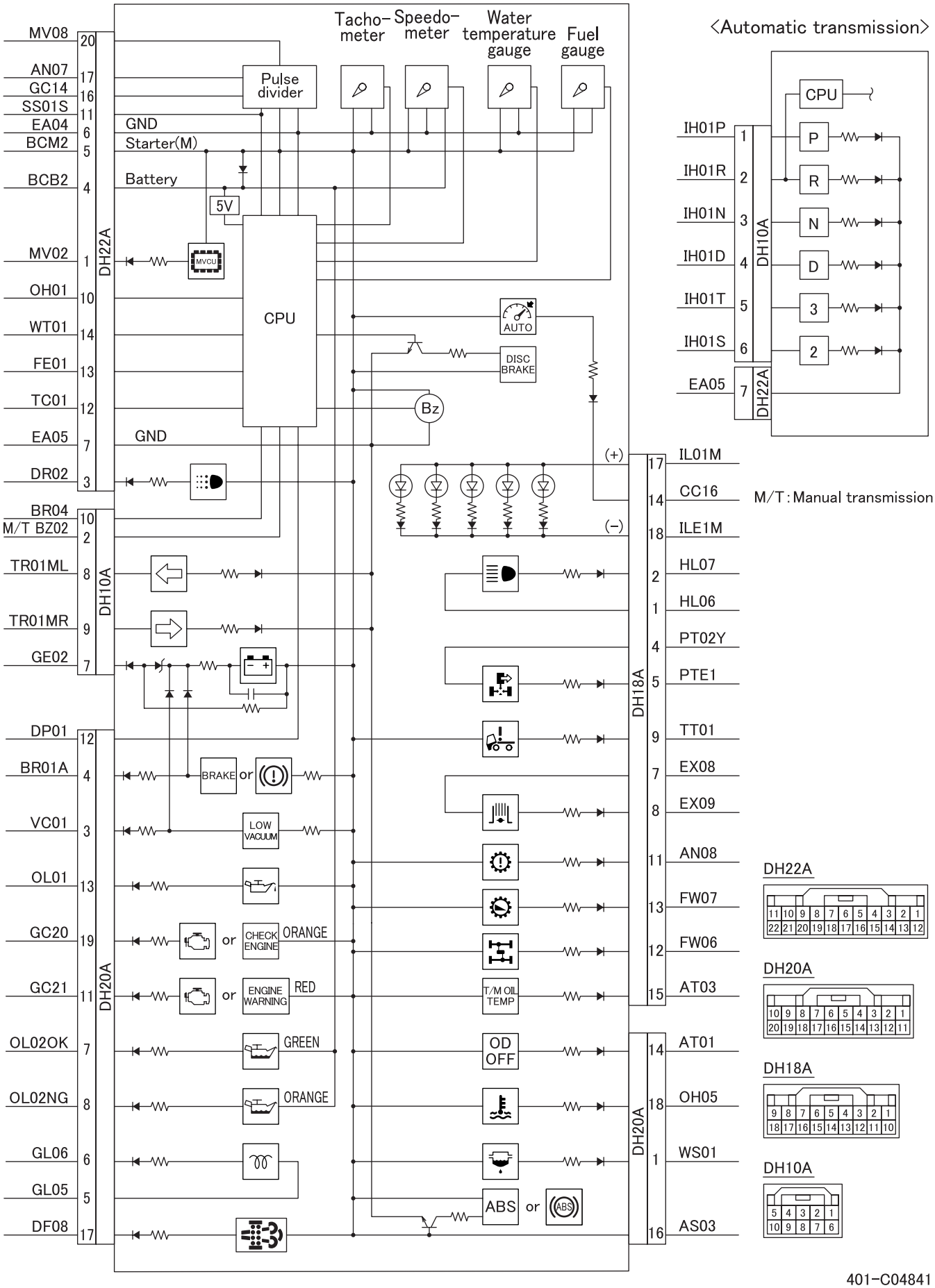

Meter cluster backward view

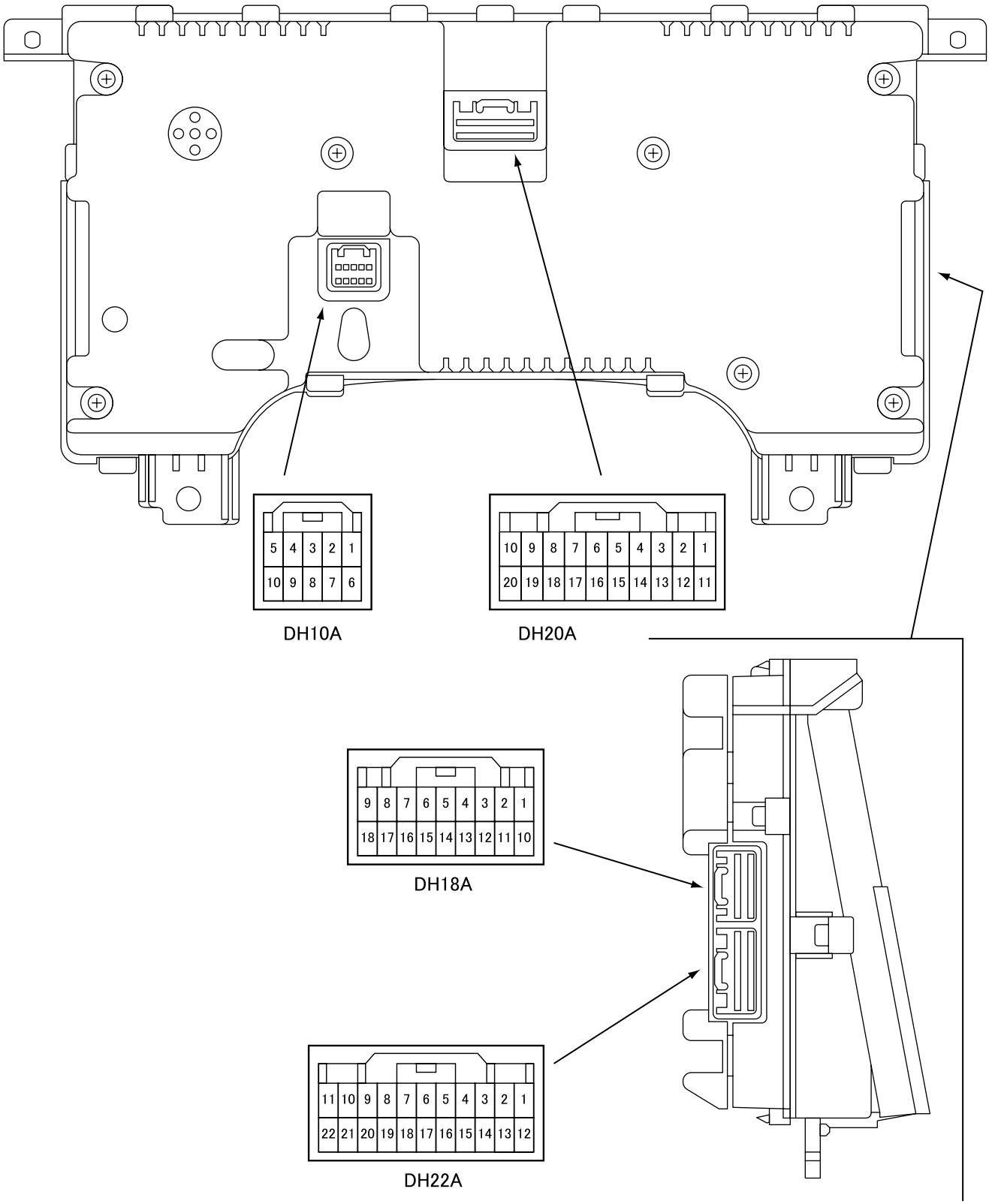

Because a CPU is built into the meter, the inner part of the meter body cannot be disassembled.

P50800N

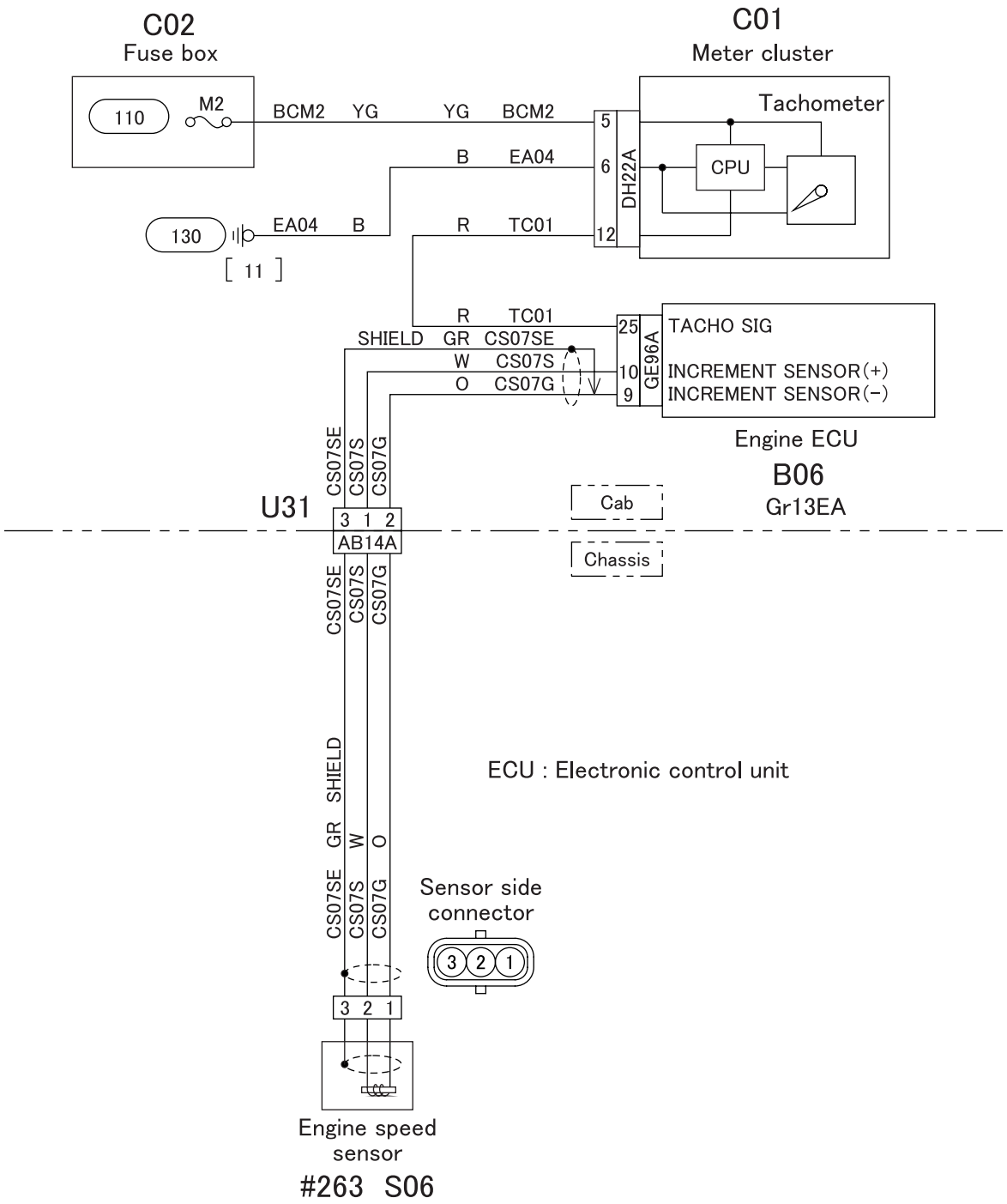
C02
Fuse box
110
M2
BCM2 YG
C01
Meter cluster
Tachometer
CPU
YG BCM2
5
B EA04
6
DH22A
130
EA04 B
R TC01
12
[11]
R TC01
SHIELD GR CS07SE
W CS07S
O CS07G
25
10
9
GE96A
TACHO SIG
INCREMENT SENSOR(+)
INCREMENT SENSOR(−)
Engine ECU
B06
Gr13EA
CS07SE
CS07S
CS07G
U31
3 1 2
AB14A
Cab
Chassis
ECU : Electronic control unit
SHIELD
GR
W
O
Sensor side
connector
3 2 1
Engine speed
sensor
#263 S06

410-C03593

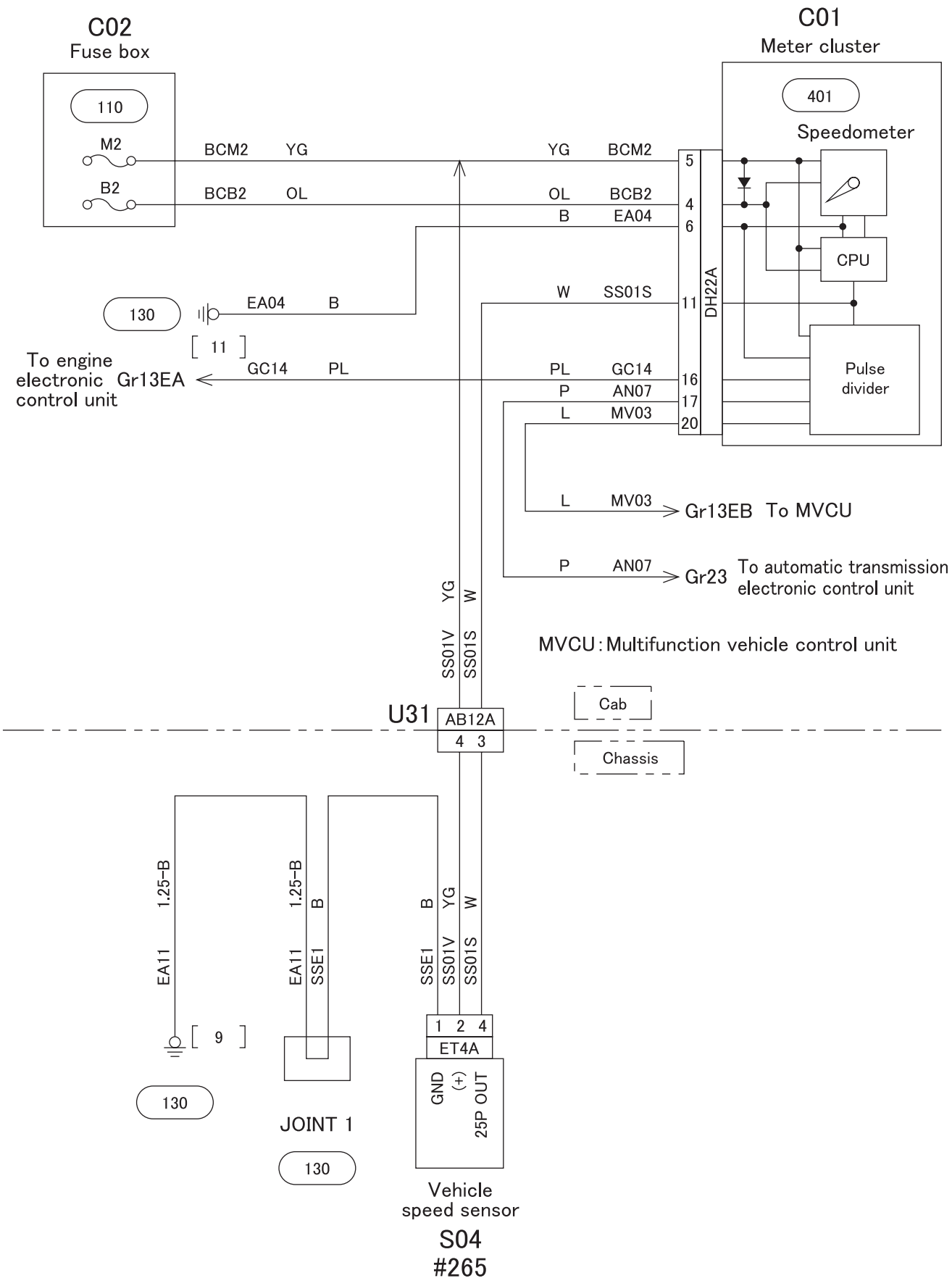
C02
Fuse box
110
M2
B2
BCM2 YG
BCB2 OL
C01
Meter cluster
401
Speedometer
CPU
Pulse divider
DH22A
YG BCM2 5
OL BCB2 4
B EA04 6
W SS01S 11
PL GC14 16
P AN07 17
L MV03 20
130
EA04 B
[11]
To engine electronic control unit Gr13EA
GC14 PL
L MV03 Gr13EB To MVCU
P AN07 Gr23 To automatic transmission electronic control unit
MVCU : Multifunction vehicle control unit
SS01V YG
SS01S W
U31
AB12A
4 3
Cab
Chassis
EA11 1.25-B
[9]
130
EA11 1.25-B
SSE1 B
JOINT 1
130
SSE1 B
SS01V YG
SS01S W
1 2 4
ET4A
GND
(+)
25P OUT
Vehicle speed sensor
S04
#265

412-C04908

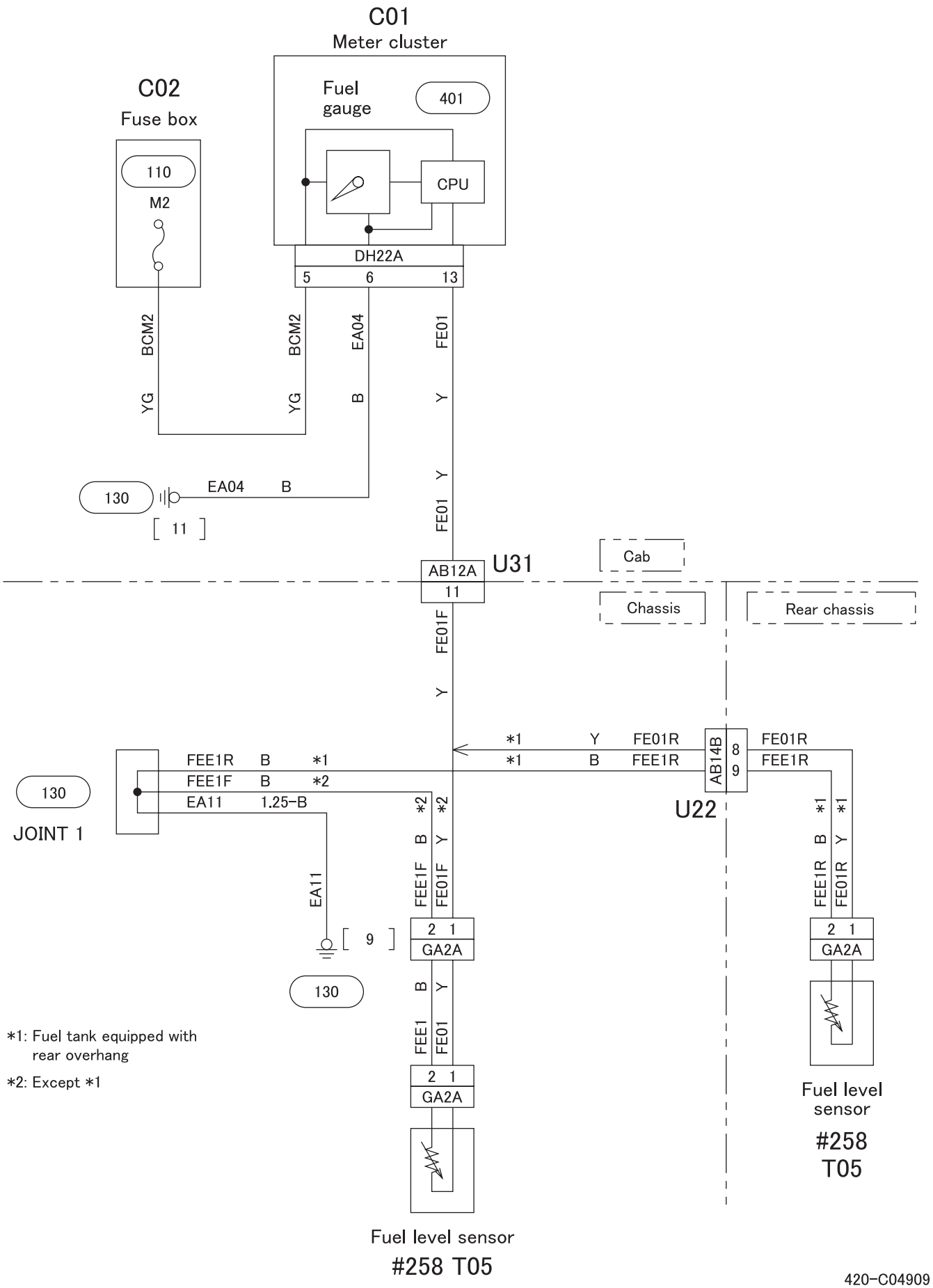
C01
Meter cluster
Fuel gauge
401
CPU
C02
Fuse box
110
M2
DH22A
5
6
13
BCM2
YG
BCM2
YG
EA04
B
FE01
Y
130
EA04
B
11
FE01
Y
AB12A
11
U31
Cab
Chassis
Rear chassis
FE01F
Y
*1
Y
FE01R
*1
B
FEE1R
AB14B
8
9
FE01R
FEE1R
FEE1R
B
*1
FEE1F
B
*2
EA11
1.25-B
130
JOINT 1
U22
*2
*2
B
Y
FEE1F
FE01F
EA11
9
2 1
GA2A
*1
*1
B
Y
FEE1R
FE01R
2 1
GA2A
130
B
Y
FEE1
FE01
2 1
GA2A
Fuel level sensor
#258
T05
*1: Fuel tank equipped with rear overhang
*2: Except *1
Fuel level sensor
#258 T05

420-C04909

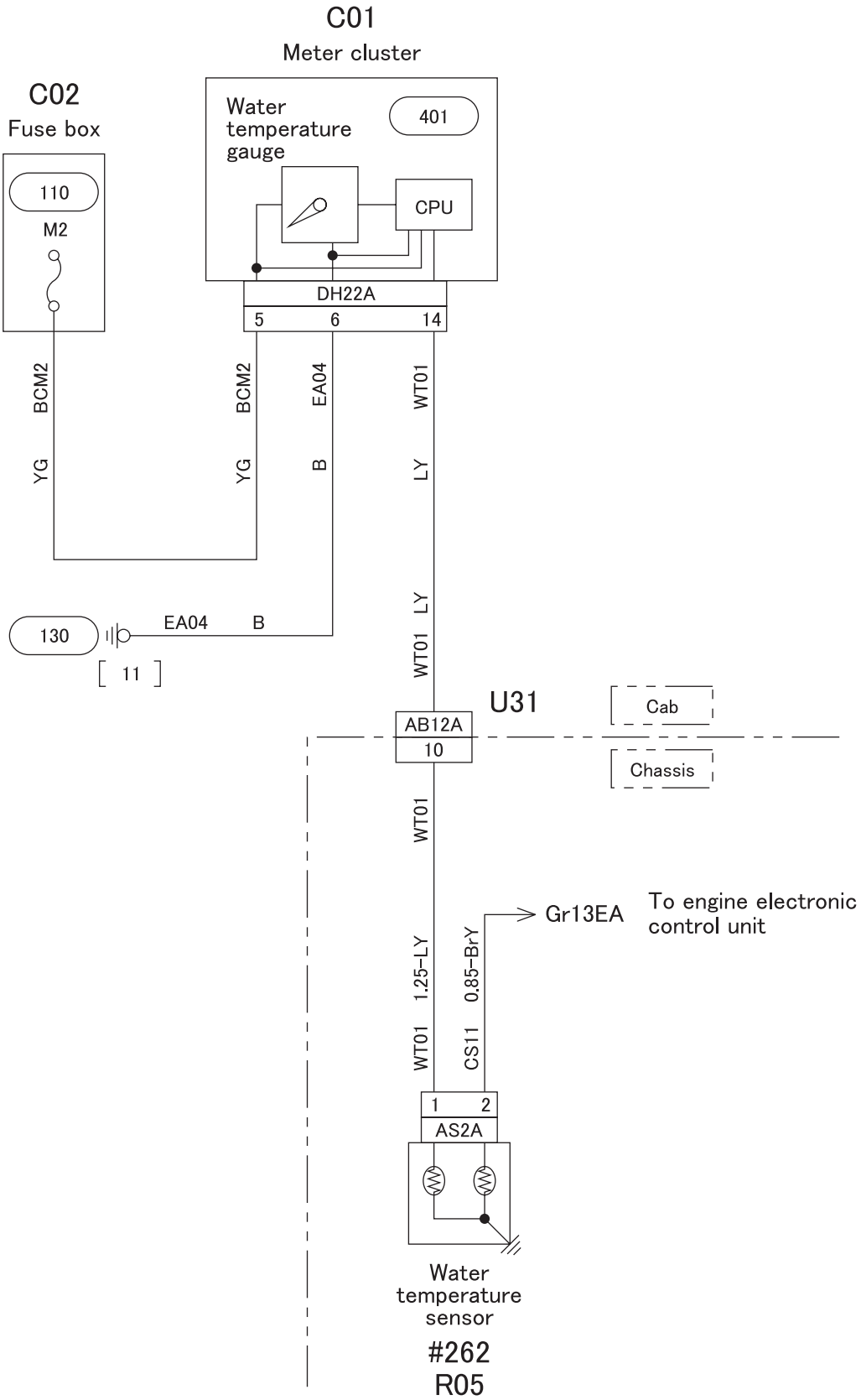
C01
Meter cluster
C02
Fuse box
Water temperature gauge
401
CPU
110
M2
DH22A
5
6
14
BCM2
YG
BCM2
YG
EA04
B
WT01
LY
130
EA04
B
[11]
WT01
LY
U31
Cab
AB12A
10
Chassis
WT01
Gr13EA
To engine electronic control unit
1.25-LY
0.85-BrY
WT01
CS11
1
2
AS2A
Water temperature sensor
#262
R05

425-C03596

54-05 INDICATOR AND WARNING LAMP CIRCUIT

510 PARKING BRAKE INDICATOR CIRCUIT

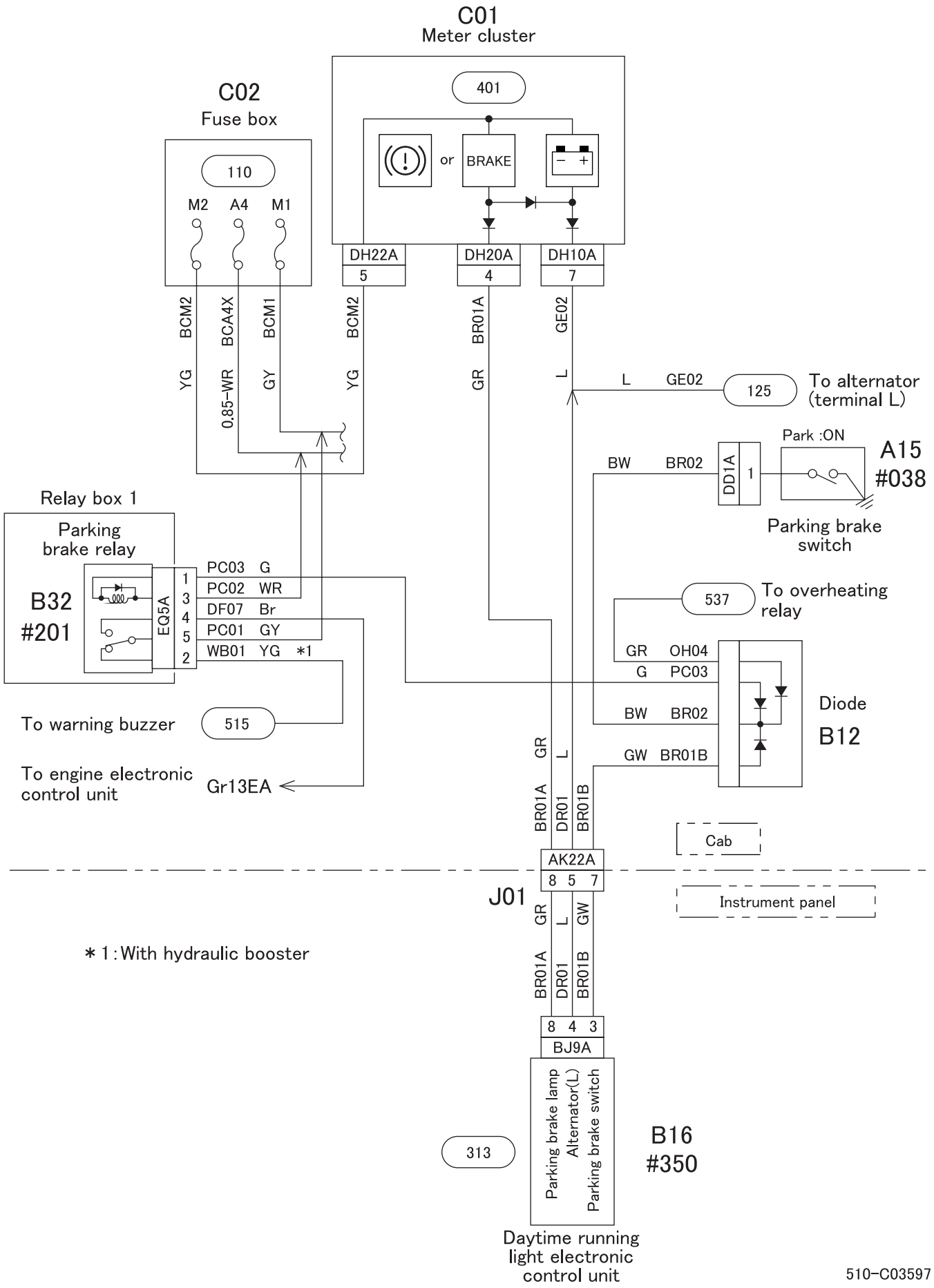

M E M O

515 BRAKE WARNING CIRCUIT

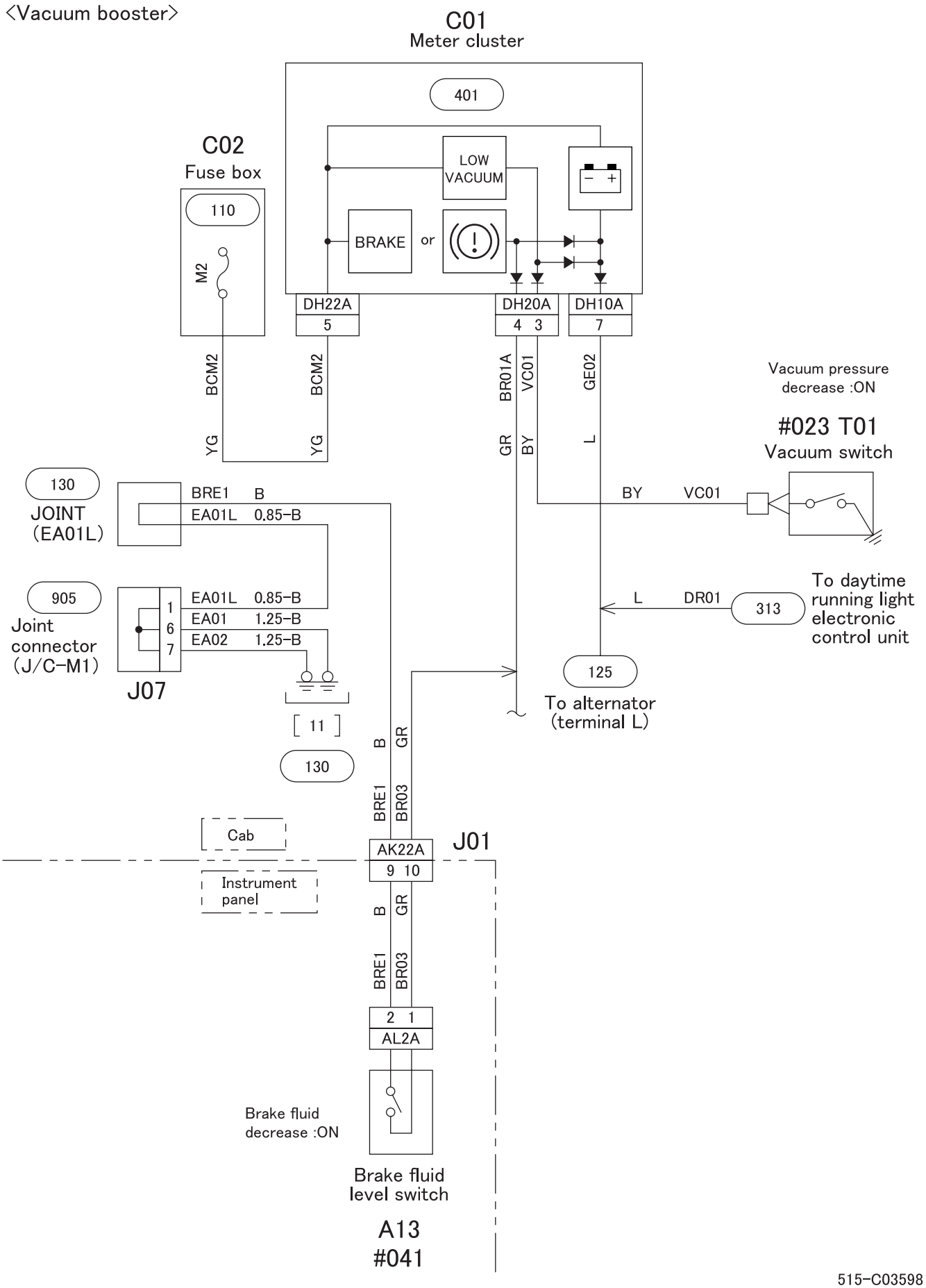

515-C03598

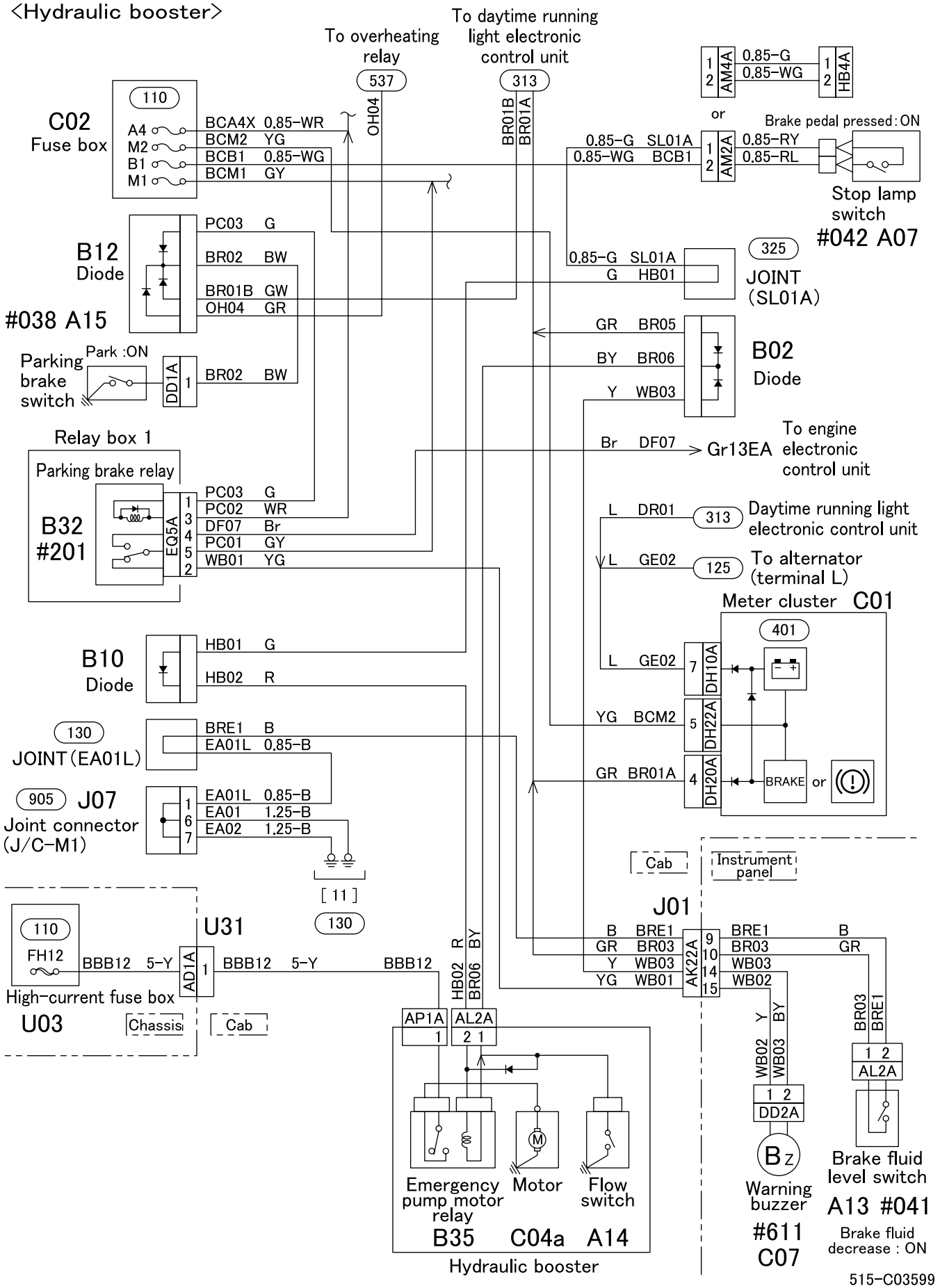
<Hydraulic booster>
To overheating relay
To daytime running light electronic control unit
537
313
OH04
BR01B
BR01A
C02
Fuse box
110
A4 BCA4X 0.85-WR
M2 BCM2 YG
B1 BCB1 0.85-WG
M1 BCM1 GY
1 2 AM4A 0.85-G
0.85-WG
1 2 HB4A
or
Brake pedal pressed : ON
0.85-G SL01A
0.85-WG BCB1
1 2 AM2A
0.85-RY
0.85-RL
Stop lamp switch
#042 A07
B12
Diode
#038 A15
PC03 G
BR02 BW
BR01B GW
OH04 GR
0.85-G SL01A
G HB01
325
JOINT (SL01A)
GR BR05
BY BR06
Y WB03
B02
Diode
Parking brake switch
Park :ON
DD1A 1
BR02 BW
Br DF07
Gr13EA
To engine electronic control unit
Relay box 1
Parking brake relay
B32
#201
EQ5A
1 PC03 G
3 PC02 WR
4 DF07 Br
5 PC01 GY
2 WB01 YG
L DR01
313
Daytime running light electronic control unit
L GE02
125
To alternator (terminal L)
Meter cluster C01
401
L GE02
7 DH10A
YG BCM2
5 DH22A
GR BR01A
4 DH20A
BRAKE
or
B10
Diode
HB01 G
HB02 R
130
JOINT (EA01L)
BRE1 B
EA01L 0.85-B
905
J07
Joint connector (J/C-M1)
1 EA01L 0.85-B
6 EA01 1.25-B
7 EA02 1.25-B
[11]
130
Cab
Instrument panel
J01
U31
110
FH12
BBB12 5-Y
AD1A 1
BBB12 5-Y
BBB12
High-current fuse box
U03
Chassis
Cab
HB02 R
BR06 BY
B BRE1
GR BR03
Y WB03
YG WB01
AK22A
9 BRE1 B
10 BR03 GR
14 WB03
15 WB02
AP1A 1
AL2A 2 1
WB02 Y
WB03 BY
BR03
BRE1
1 2 AL2A
1 2 DD2A
BZ
Warning buzzer
#611
C07
Brake fluid level switch
A13 #041
Brake fluid decrease : ON
Emergency pump motor relay
Motor
Flow switch
B35
C04a
A14
Hydraulic booster
515-C03599

535 ENGINE OIL LEVEL WARNING CIRCUIT

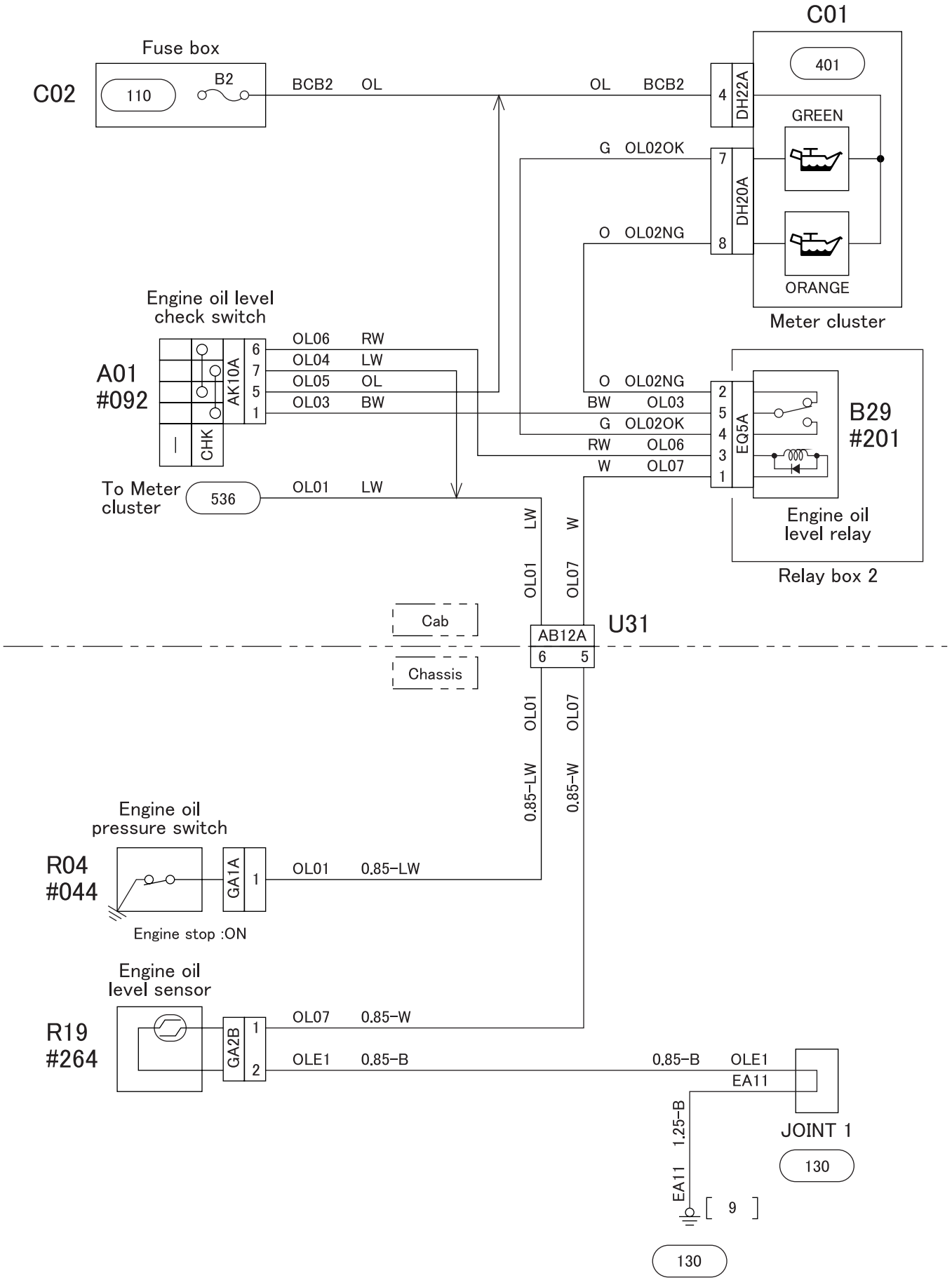

535-C04910

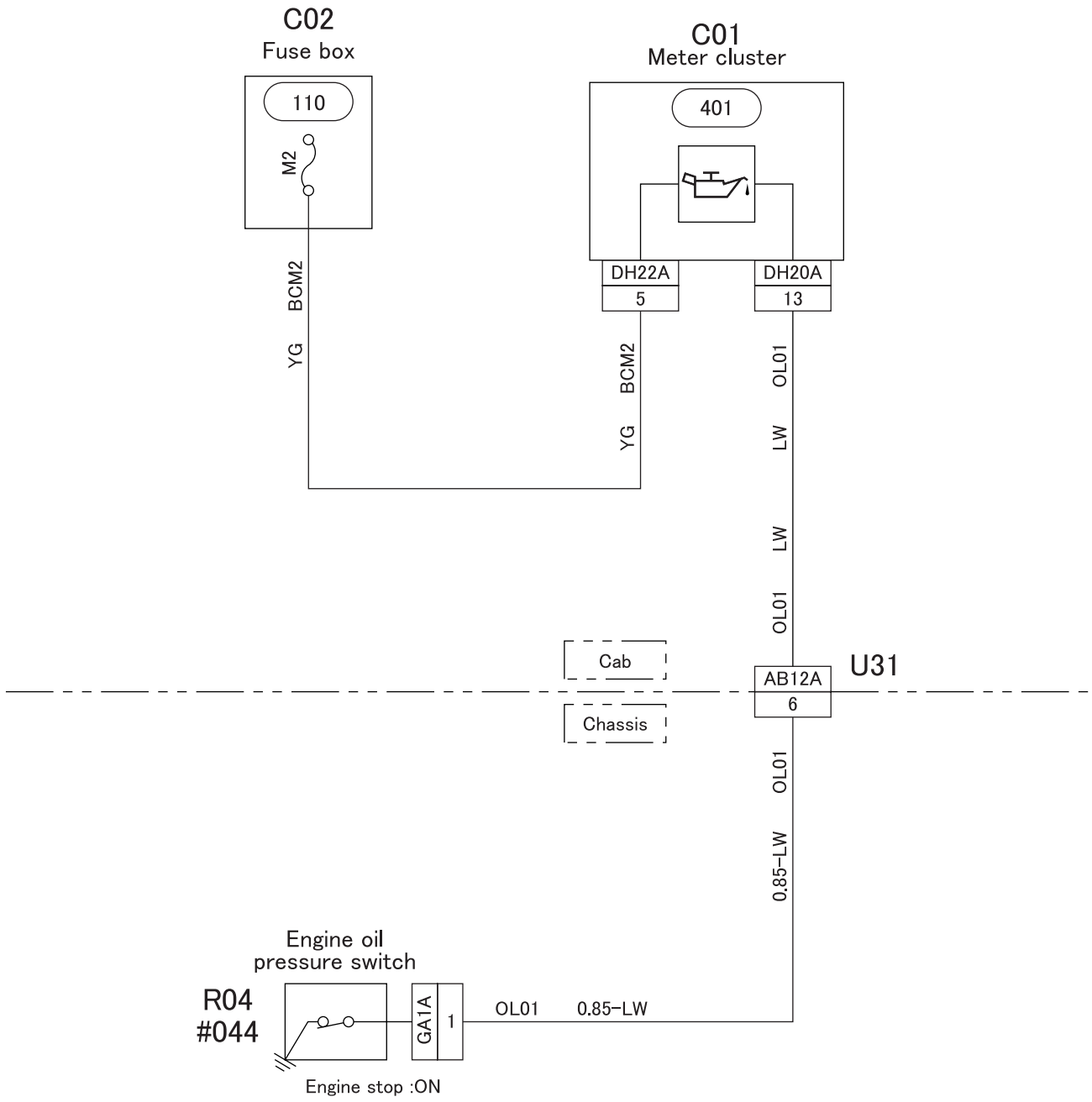
C02
Fuse box
110
M2
C01
Meter cluster
401
DH22A
5
DH20A
13
BCM2
YG
BCM2
YG
OL01
LW
LW
OL01
Cab
Chassis
AB12A
6
U31
OL01
0.85-LW
Engine oil
pressure switch
R04
#044
GA1A
1
OL01
0.85-LW
Engine stop :ON

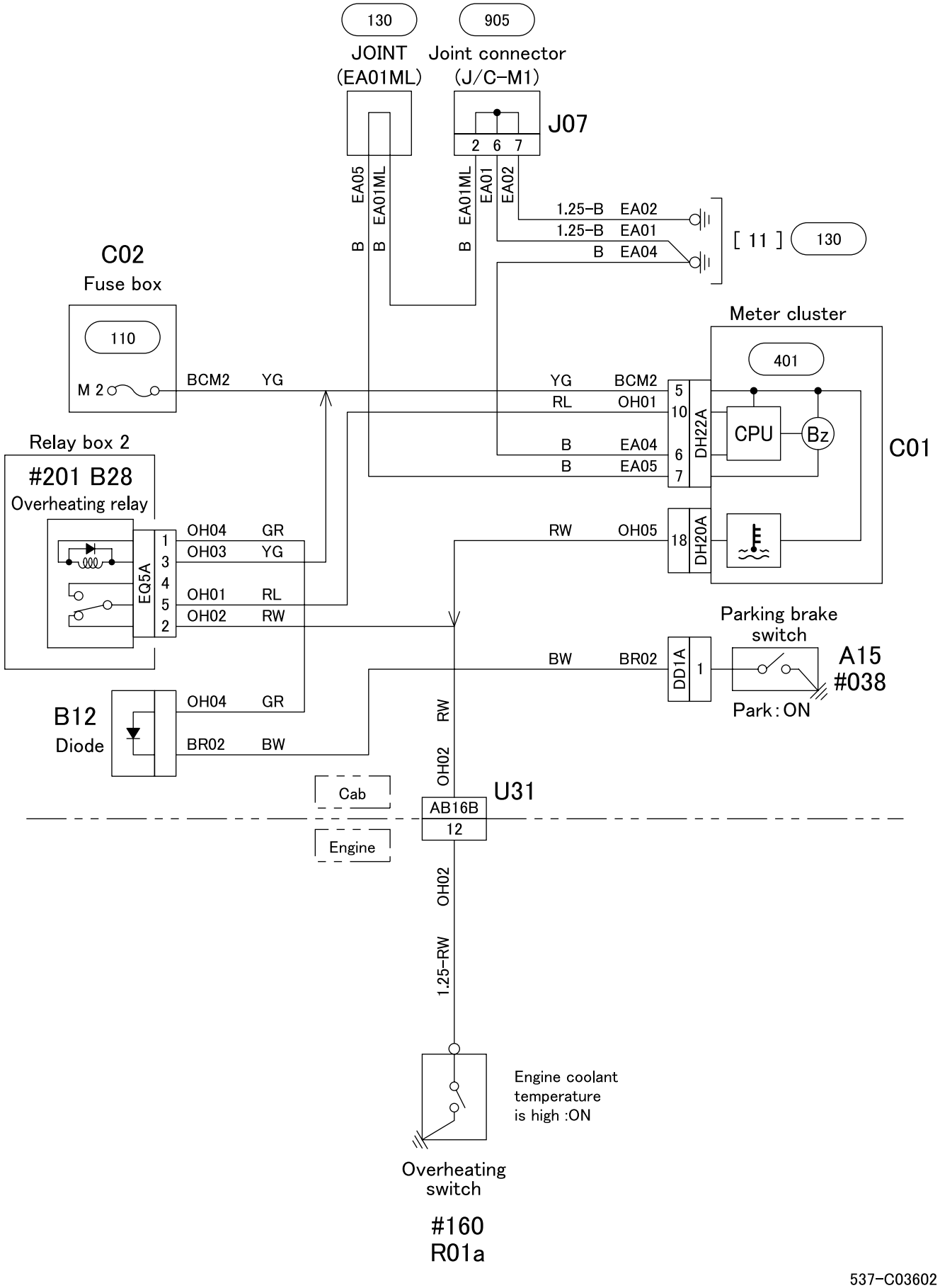
130
905
JOINT
(EA01ML)
Joint connector
(J/C-M1)
J07
2 6 7
EA05
B EA01ML
B EA01ML
EA01
EA02
1.25-B EA02
1.25-B EA01
B EA04
[11]
130
C02
Fuse box
110
M 2
BCM2 YG
Meter cluster
401
YG BCM2
RL OH01
B EA04
B EA05
5
10
6
7
DH22A
CPU
Bz
C01
Relay box 2
#201 B28
Overheating relay
EQ5A
1
3
4
5
2
OH04 GR
OH03 YG
OH01 RL
OH02 RW
RW OH05
18
DH20A
Parking brake
switch
BW BR02
DD1A
1
A15
#038
Park : ON
B12
Diode
OH04 GR
BR02 BW
RW
OH02
Cab
U31
AB16B
12
Engine
OH02
1.25-RW
Engine coolant
temperature
is high :ON
Overheating
switch
#160
R01a

537-C03602

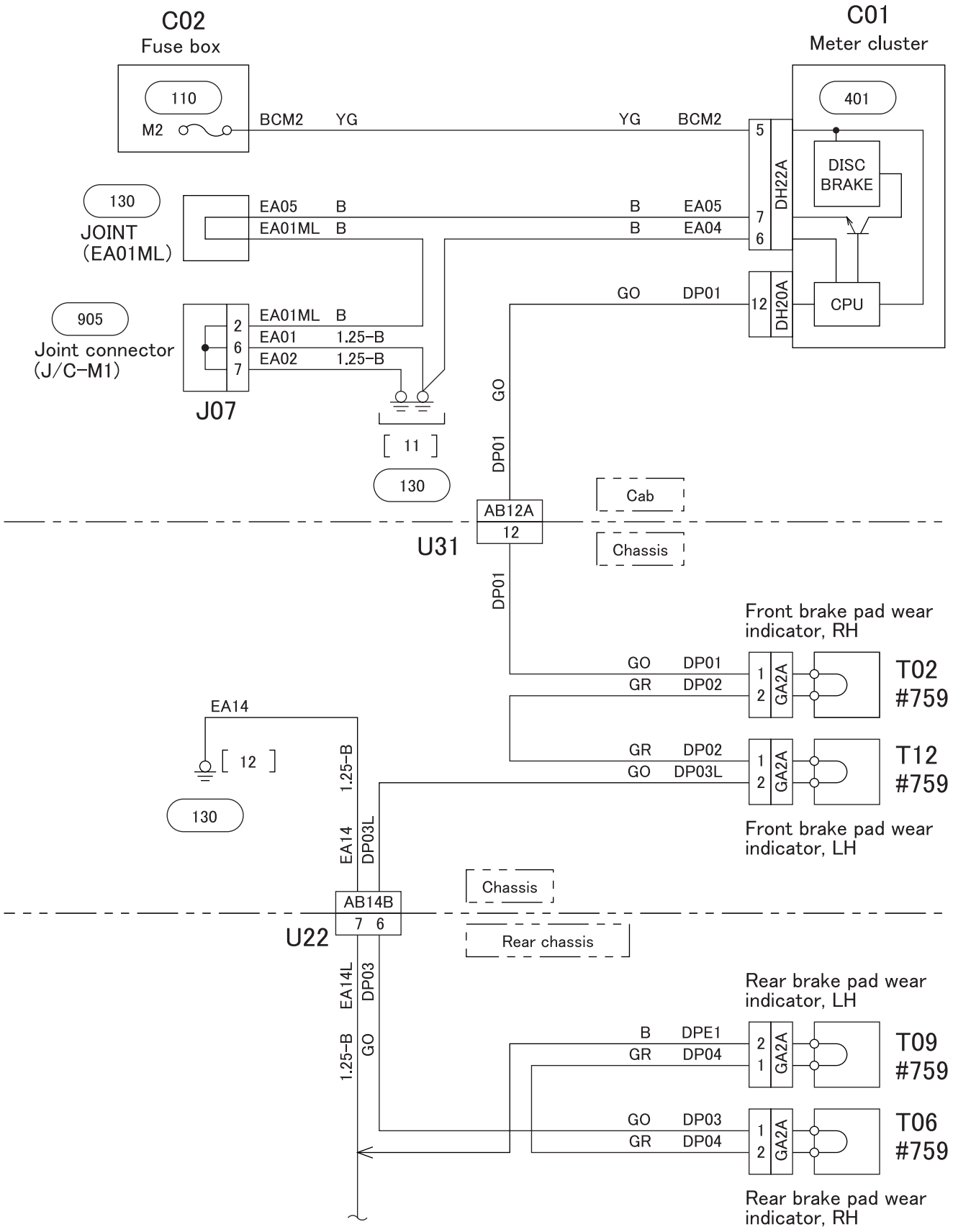
C02
Fuse box
110
M2
BCM2 YG
C01
Meter cluster
401
YG BCM2
5
DH22A
DISC BRAKE
130
JOINT (EA01ML)
EA05 B
EA01ML B
B EA05
B EA04
7
6
GO DP01
12
DH20A
CPU
905
Joint connector (J/C-M1)
2
6
7
EA01ML B
EA01 1.25-B
EA02 1.25-B
J07
11
130
GO
DP01
Cab
AB12A
12
U31
Chassis
DP01
Front brake pad wear indicator, RH
GO DP01
GR DP02
1
2
GA2A
T02
#759
EA14
12
130
GR DP02
GO DP03L
T12
#759
Front brake pad wear indicator, LH
1.25-B
EA14
DP03L
Chassis
AB14B
7 6
U22
Rear chassis
EA14L
DP03
1.25-B
GO
Rear brake pad wear indicator, LH
B DPE1
GR DP04
2
1
T09
#759
GO DP03
GR DP04
T06
#759
Rear brake pad wear indicator, RH

540-C03603

550 CAB TILT WARNING CIRCUIT

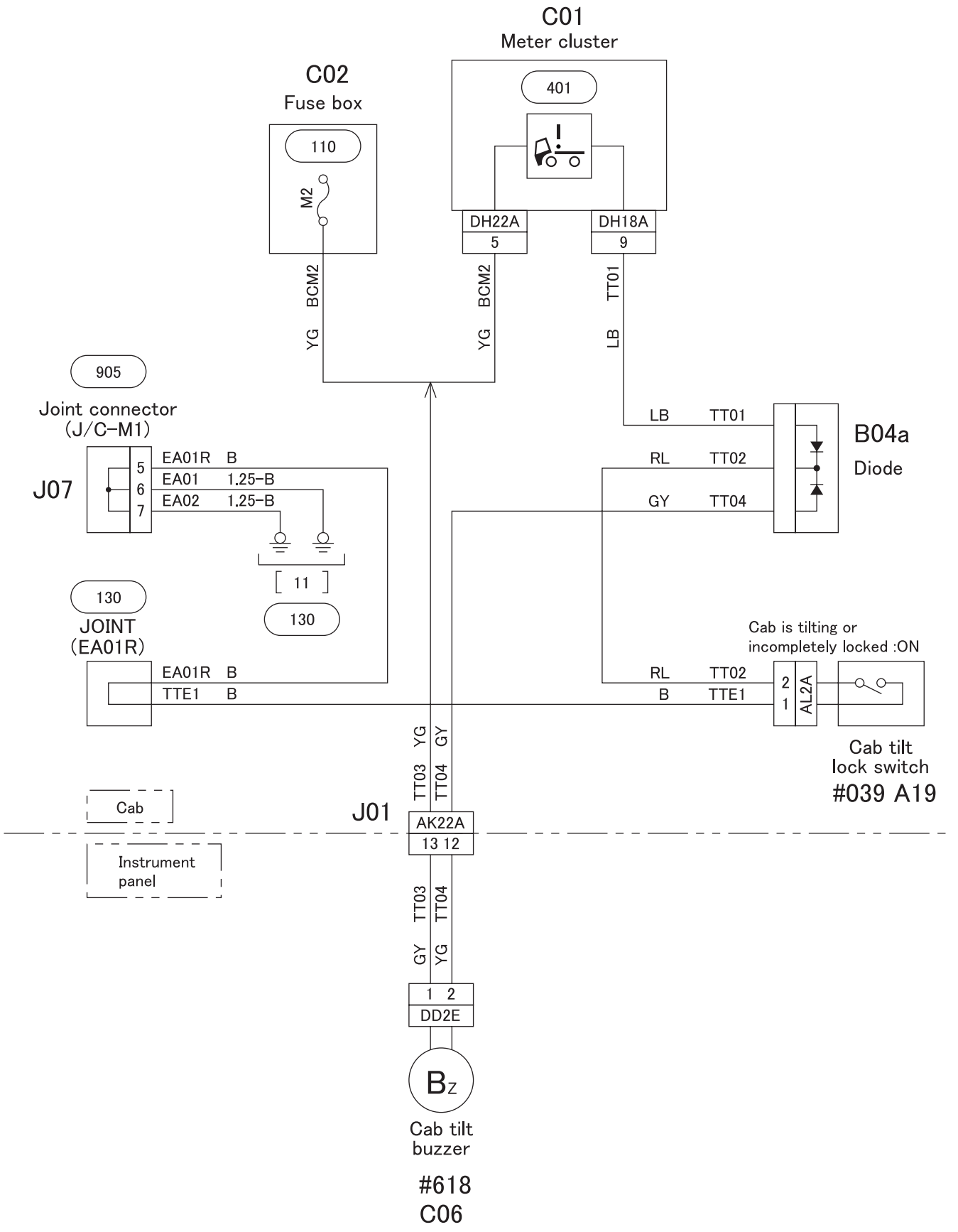

550-C03604

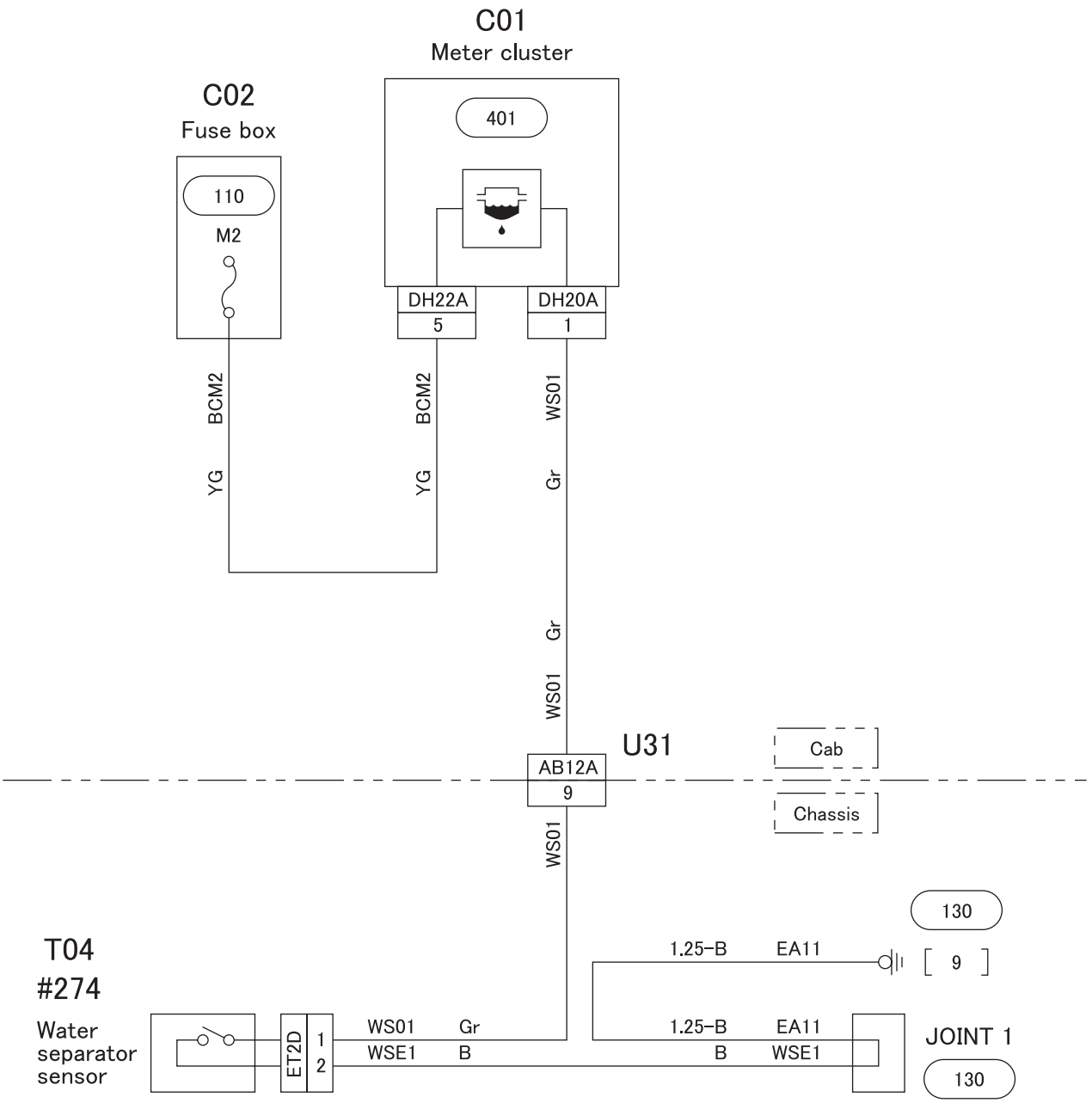

If the accumulated water exceeds
the specified limit, the switch turns ON

566-C04911

54-06 CAB SIDE ELECTRICAL CIRCUIT

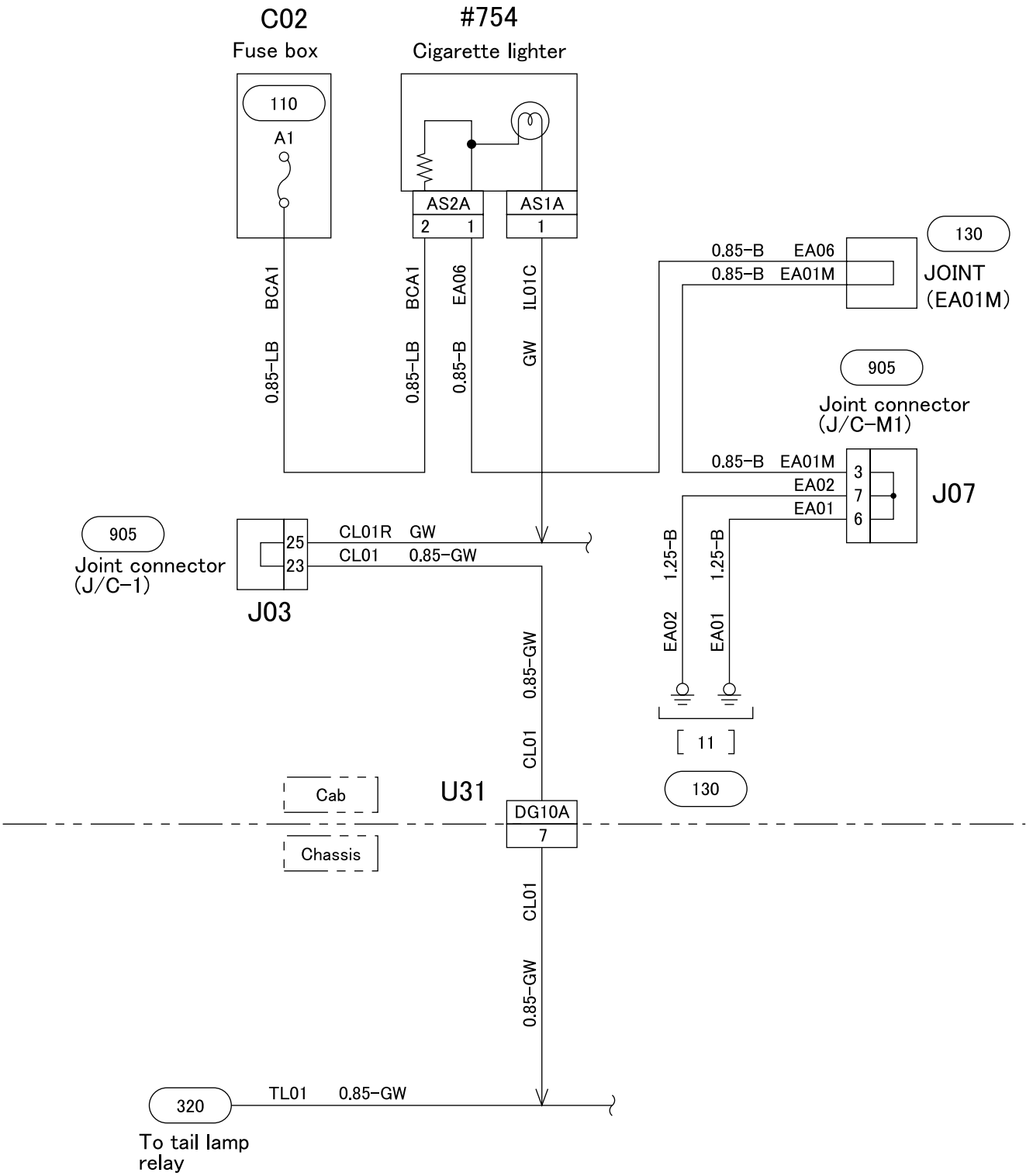
C02
Fuse box
#754
Cigarette lighter
110
A1
AS2A
2 1
AS1A
1
BCA1
0.85-LB
BCA1
0.85-LB
EA06
0.85-B
IL01C
GW
130
0.85-B EA06
0.85-B EA01M
JOINT
(EA01M)
905
Joint connector
(J/C-M1)
0.85-B EA01M
EA02
EA01
3
7
6
J07
905
Joint connector
(J/C-1)
25
23
CL01R GW
CL01 0.85-GW
J03
1.25-B
EA02
1.25-B
EA01
[11]
130
0.85-GW
CL01
Cab
U31
DG10A
7
Chassis
CL01
0.85-GW
320
TL01 0.85-GW
To tail lamp
relay

610-C03606

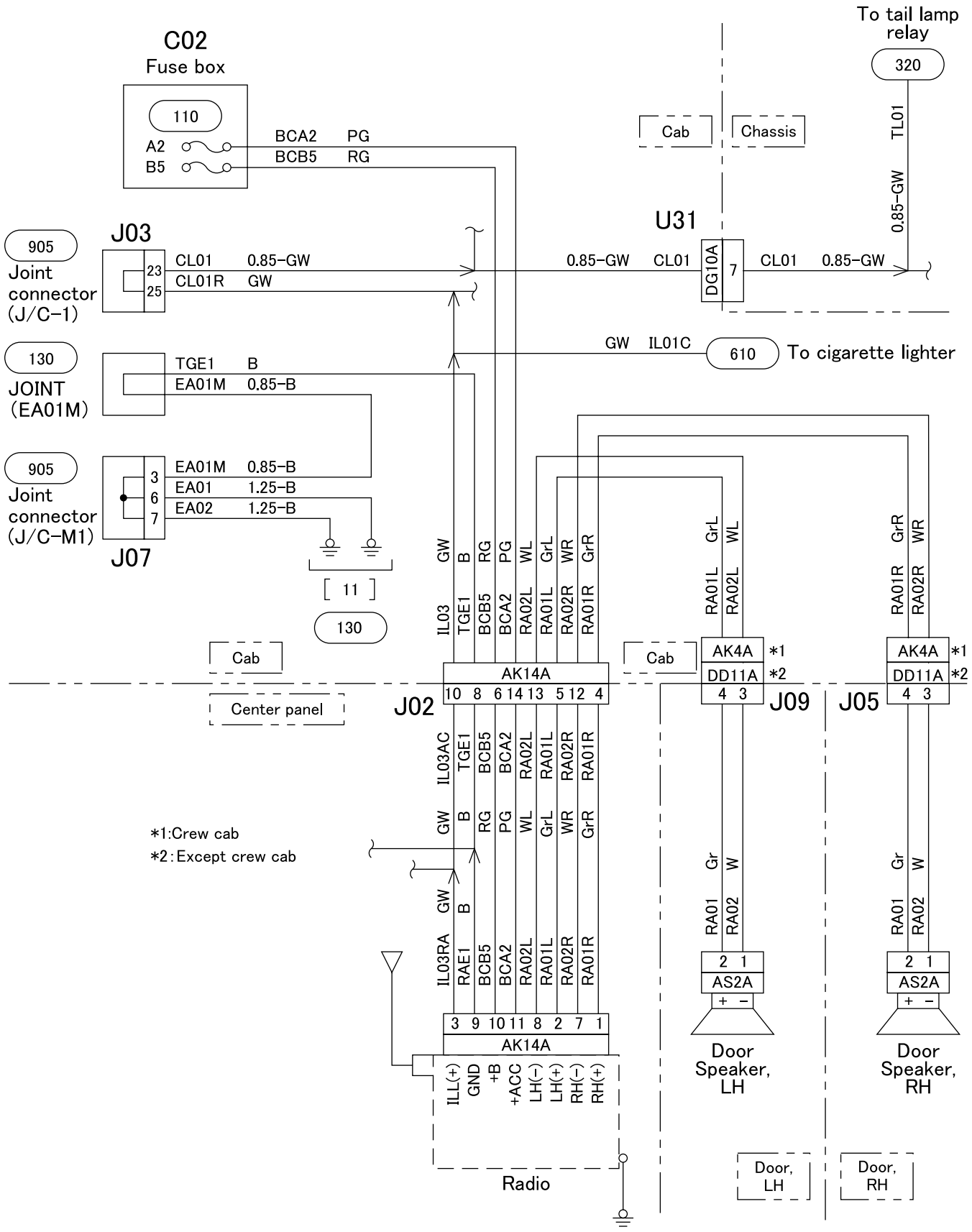
C02
Fuse box
110
A2
B5
BCA2 PG
BCB5 RG
To tail lamp relay
320
TL01
0.85-GW
Cab
Chassis
U31
DG10A
7
0.85-GW CL01
CL01 0.85-GW
905
Joint connector (J/C-1)
J03
23
25
CL01 0.85-GW
CL01R GW
130
JOINT (EA01M)
TGE1 B
EA01M 0.85-B
905
Joint connector (J/C-M1)
J07
3
6
7
EA01M 0.85-B
EA01 1.25-B
EA02 1.25-B
11
130
GW IL01C
610
To cigarette lighter
Cab
Center panel
AK14A
J02
10 8 6 14 13 5 12 4
IL03 GW B TGE1 BCB5 RG BCA2 PG RA02L WL RA01L GrL RA02R WR RA01R GrR
IL03AC GW B TGE1 BCB5 RG BCA2 PG RA02L WL RA01L GrL RA02R WR RA01R GrR
IL03RA GW B RAE1 BCB5 BCA2 RA02L RA01L RA02R RA01R
3 9 10 11 8 2 7 1
AK14A
ILL(+) GND +B +ACC LH(−) LH(+) RH(−) RH(+)
Radio
Cab
AK4A *1
DD11A *2
4 3
J09
RA01L GrL RA02L WL
Gr W RA01 RA02
2 1
AS2A
+ −
Door Speaker, LH
Door, LH
AK4A *1
DD11A *2
4 3
J05
RA01R GrR RA02R WR
Gr W RA01 RA02
2 1
AS2A
+ −
Door Speaker, RH
Door, RH
*1:Crew cab
*2:Except crew cab

612-C04057

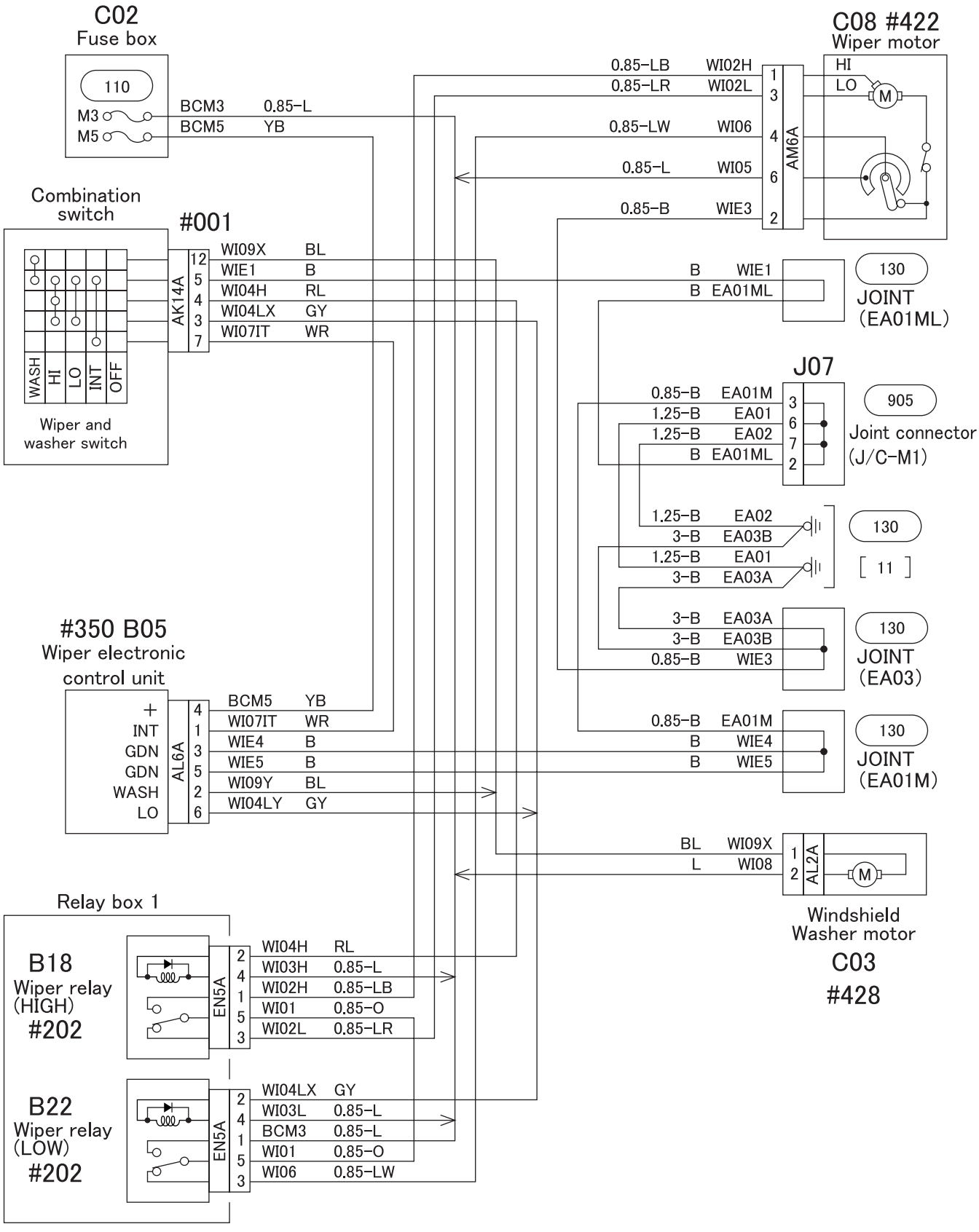
C02
Fuse box
110
M3
M5
BCM3 0.85-L
BCM5 YB
C08 #422
Wiper motor
HI
LO
M
0.85-LB WI02H 1
0.85-LR WI02L 3
0.85-LW WI06 4
0.85-L WI05 6
0.85-B WIE3 2
AM6A
Combination switch
#001
AK14A
12 WI09X BL
5 WIE1 B
4 WI04H RL
3 WI04LX GY
7 WI07IT WR
WASH HI LO INT OFF
Wiper and washer switch
B WIE1
B EA01ML
130
JOINT
(EA01ML)
J07
0.85-B EA01M 3
1.25-B EA01 6
1.25-B EA02 7
B EA01ML 2
905
Joint connector
(J/C-M1)
1.25-B EA02
3-B EA03B
1.25-B EA01
3-B EA03A
130
[11]
3-B EA03A
3-B EA03B
0.85-B WIE3
130
JOINT
(EA03)
0.85-B EA01M
B WIE4
B WIE5
130
JOINT
(EA01M)
#350 B05
Wiper electronic control unit
+
INT
GDN
GDN
WASH
LO
AL6A
4 BCM5 YB
1 WI07IT WR
3 WIE4 B
5 WIE5 B
2 WI09Y BL
6 WI04LY GY
BL WI09X 1
L WI08 2
AL2A
M
Windshield Washer motor
C03
#428
Relay box 1
B18
Wiper relay
(HIGH)
#202
EN5A
2 WI04H RL
4 WI03H 0.85-L
1 WI02H 0.85-LB
5 WI01 0.85-O
3 WI02L 0.85-LR
B22
Wiper relay
(LOW)
#202
EN5A
2 WI04LX GY
4 WI03L 0.85-L
1 BCM3 0.85-L
5 WI01 0.85-O
3 WI06 0.85-LW

614-C03608

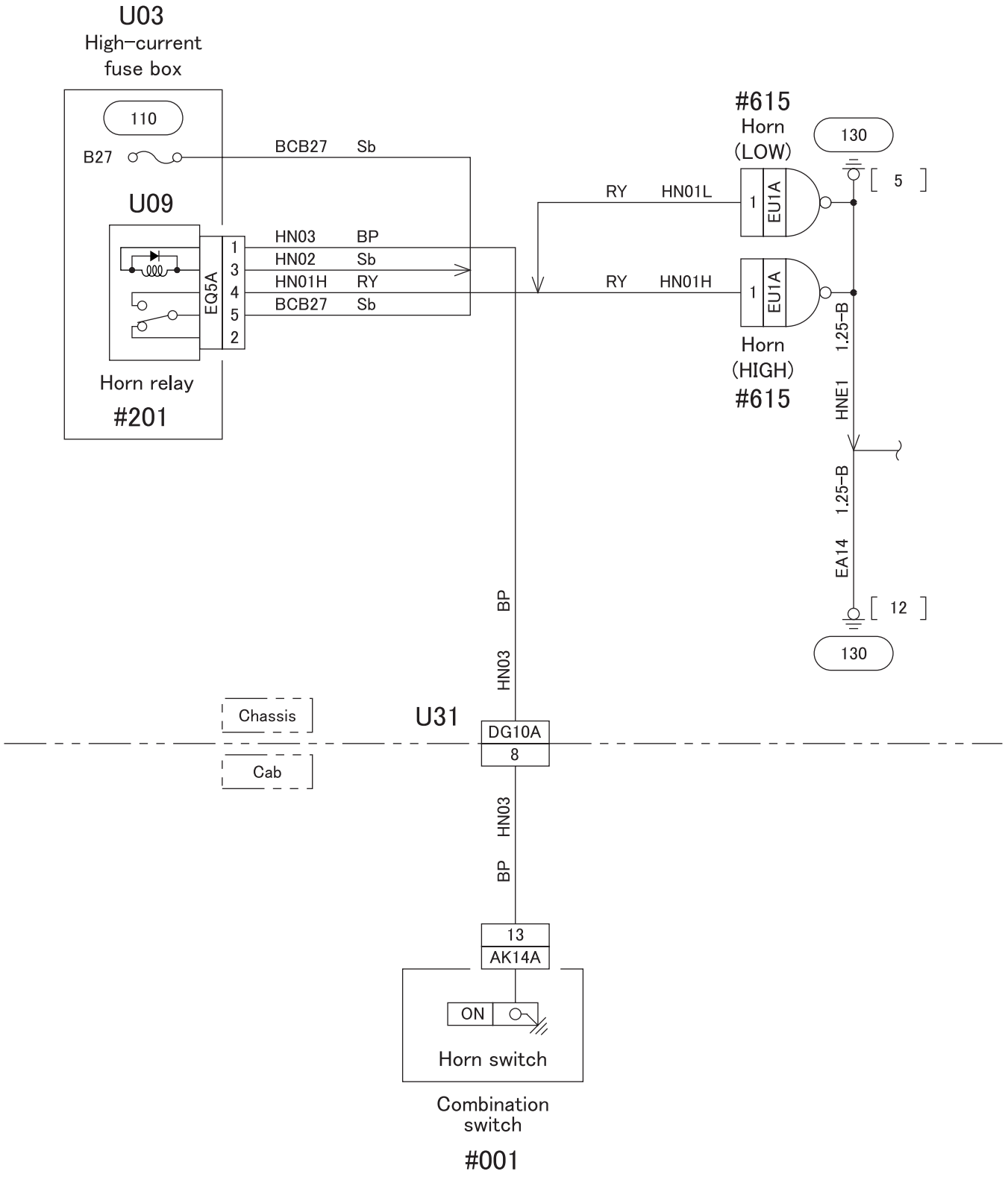
U03
High-current
fuse box
110
B27
BCB27 Sb
U09
HN03 BP
HN02 Sb
HN01H RY
BCB27 Sb
EQ5A
1
3
4
5
2
Horn relay
#201
#615
Horn
(LOW)
130
RY HN01L
1
EU1A
5
RY HN01H
Horn
(HIGH)
#615
1.25-B
HNE1
1.25-B
EA14
12
130
BP
HN03
Chassis
Cab
U31
DG10A
8
HN03
BP
13
AK14A
ON
Horn switch
Combination
switch
#001

616-C03609

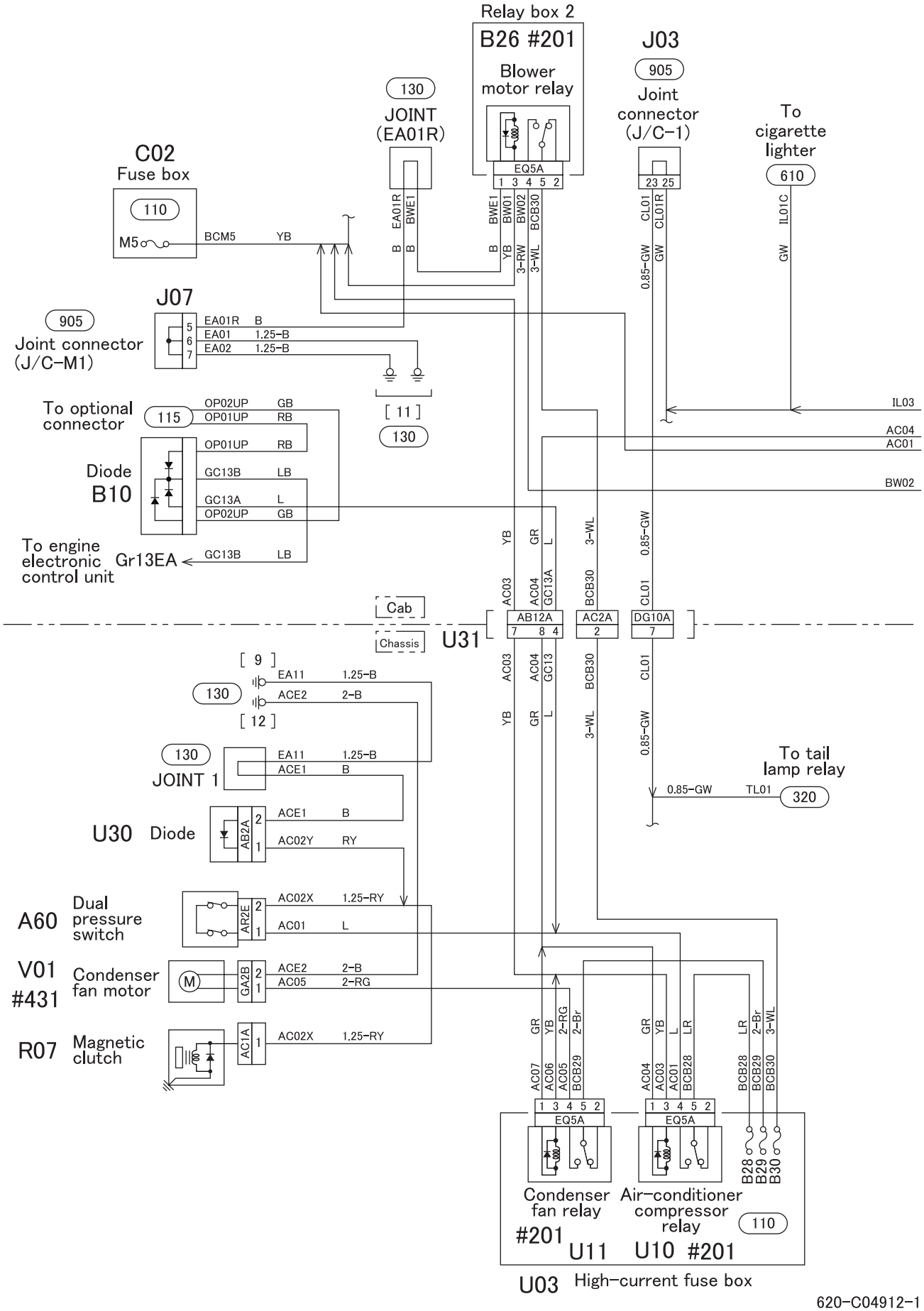
Relay box 2
B26 #201
Blower motor relay
J03
905
Joint connector (J/C-1)
To cigarette lighter
610
130
JOINT (EA01R)
C02
Fuse box
110
M5
BCM5
YB
EA01R
BWE1
BWE1
BW01
BW02
BCB30
CL01
CL01R
IL01C
EQ5A
1 3 4 5 2
23 25
0.85-GW
GW
3-RW
3-WL
J07
905
Joint connector (J/C-M1)
5
6
7
EA01R B
EA01 1.25-B
EA02 1.25-B
[11]
130
To optional connector
115
OP02UP GB
OP01UP RB
OP01UP RB
Diode B10
GC13B LB
GC13A L
OP02UP GB
To engine electronic control unit
Gr13EA
GC13B LB
IL03
AC04
AC01
BW02
Cab
Chassis
U31
AB12A
AC2A
DG10A
AC03
AC04
GC13A
BCB30
CL01
YB
GR
L
3-WL
0.85-GW
[9]
130
EA11 1.25-B
ACE2 2-B
[12]
130
JOINT 1
EA11 1.25-B
ACE1 B
U30 Diode
AB2A
ACE1 B
AC02Y RY
To tail lamp relay
0.85-GW TL01
320
A60 Dual pressure switch
AR2E
AC02X 1.25-RY
AC01 L
V01 #431 Condenser fan motor
GA2B
ACE2 2-B
AC05 2-RG
R07 Magnetic clutch
AC1A
AC02X 1.25-RY
AC07
AC06
AC05
BCB29
AC04
AC03
AC01
BCB28
BCB28
BCB29
BCB30
LR
2-Br
2-RG
Condenser fan relay #201
Air-conditioner compressor relay
110
U11
U10 #201
B28
B29
B30
U03 High-current fuse box

620-C04912-1

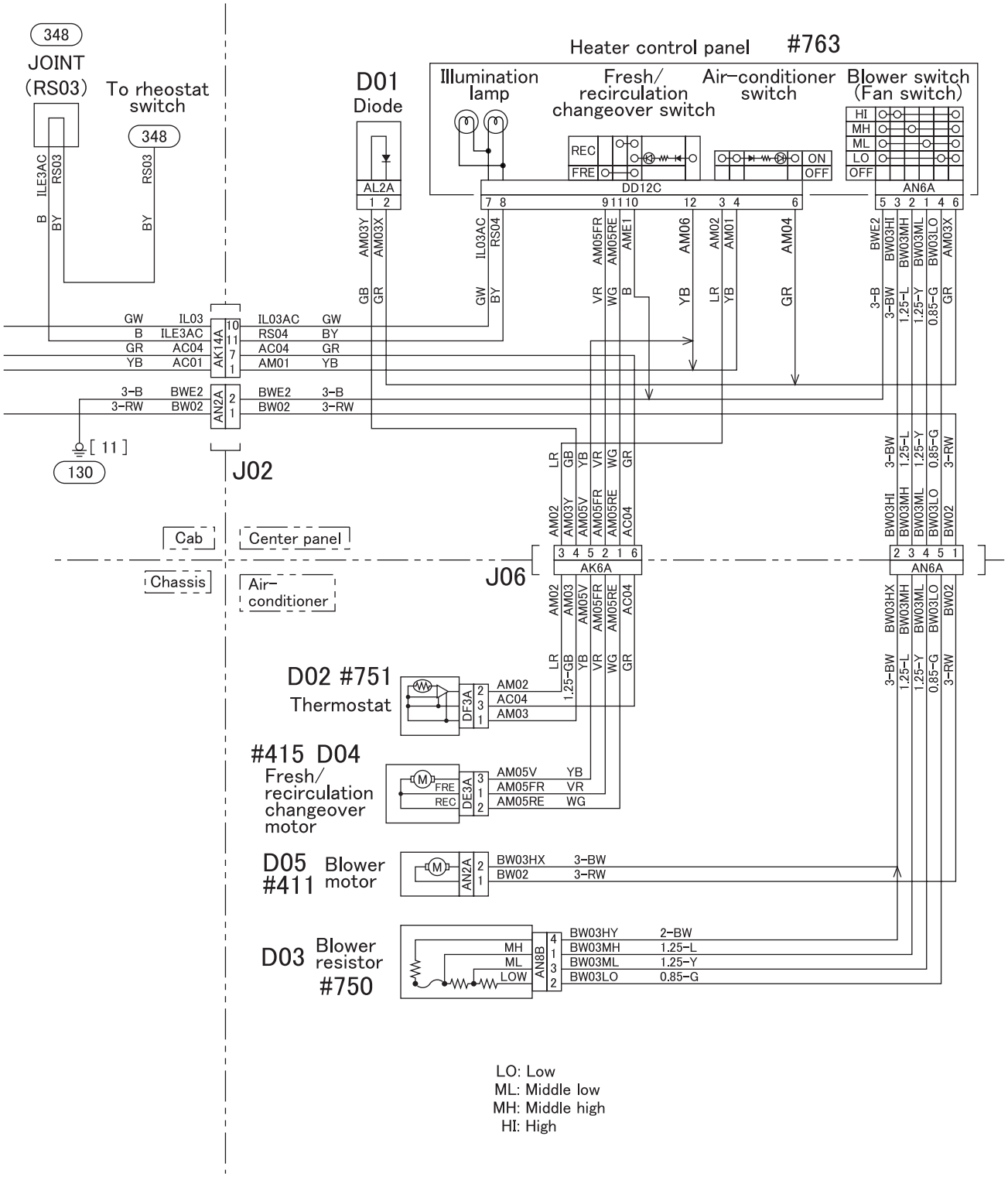
348
JOINT
(RS03)
To rheostat switch
348
Heater control panel #763
D01
Diode
Illumination lamp
Fresh/ recirculation changeover switch
Air-conditioner switch
Blower switch (Fan switch)
HI
MH
ML
LO
OFF
REC
FRE
ON
OFF
AL2A
DD12C
AN6A
ILE3AC
RS03
B
BY
AM03Y
AM03X
IL03AC
RS04
AM05FR
AM05RE
AME1
AM06
AM02
AM01
AM04
BWE2
BW03HI
BW03MH
BW03ML
BW03LO
AM03X
GW
IL03
ILE3AC
AC04
AC01
AK14A
AM01
3-B
BWE2
3-RW
BW02
AN2A
[11]
130
J02
Cab
Center panel
Chassis
Air-conditioner
J06
AK6A
AN6A
D02 #751
Thermostat
DF3A
D04 #415
Fresh/ recirculation changeover motor
DE3A
FRE
REC
D05 #411
Blower motor
D03
Blower resistor #750
AN8B
MH
ML
LOW
BW03HX
BW03HY
2-BW
1.25-L
1.25-Y
0.85-G
3-BW
3-RW
LO: Low
ML: Middle low
MH: Middle high
HI: High

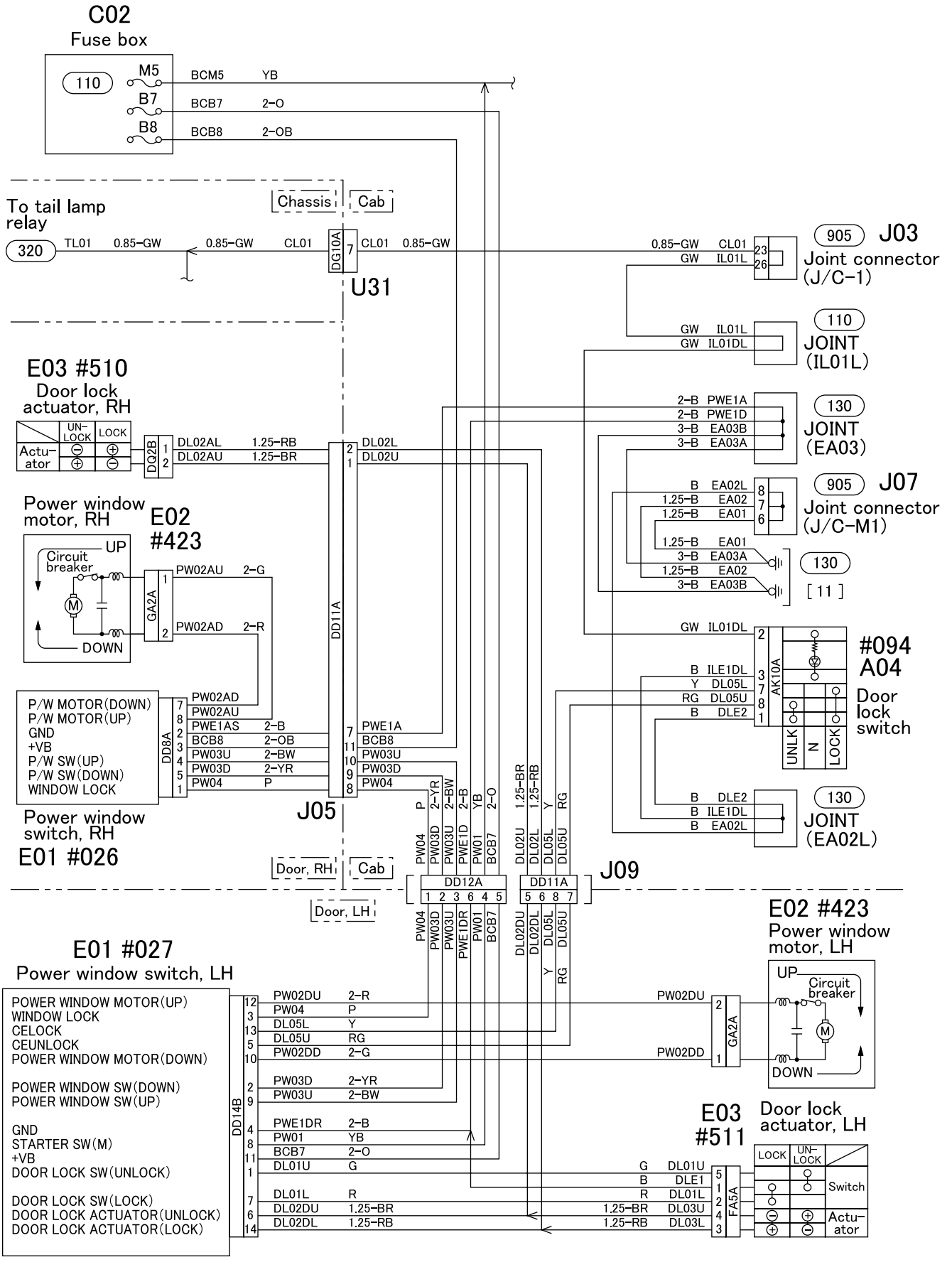
C02
Fuse box
110
M5
B7
B8
BCM5 YB
BCB7 2-O
BCB8 2-OB
To tail lamp relay
320
TL01 0.85-GW
0.85-GW CL01
Chassis
Cab
DG10A
7
CL01 0.85-GW
U31
905 J03
Joint connector (J/C-1)
0.85-GW CL01
GW IL01L
23
26
110
JOINT (IL01L)
GW IL01L
GW IL01DL
E03 #510
Door lock actuator, RH
UN-LOCK
LOCK
Actu-ator
DQ2B
1
2
DL02AL 1.25-RB
DL02AU 1.25-BR
DL02L
DL02U
130
JOINT (EA03)
2-B PWE1A
2-B PWE1D
3-B EA03B
3-B EA03A
905 J07
Joint connector (J/C-M1)
B EA02L
1.25-B EA02
1.25-B EA01
8
7
6
1.25-B EA01
3-B EA03A
1.25-B EA02
3-B EA03B
130
[11]
Power window motor, RH
E02 #423
UP
Circuit breaker
DOWN
GA2A
PW02AU 2-G
PW02AD 2-R
DD11A
GW IL01DL
#094 A04
Door lock switch
AK10A
B ILE1DL
Y DL05L
RG DL05U
B DLE2
UNLK
N
LOCK
P/W MOTOR(DOWN)
P/W MOTOR(UP)
GND
+VB
P/W SW(UP)
P/W SW(DOWN)
WINDOW LOCK
DD8A
PW02AD
PW02AU
PWE1AS 2-B
BCB8 2-OB
PW03U 2-BW
PW03D 2-YR
PW04 P
PWE1A
BCB8
PW03U
PW03D
PW04
J05
B DLE2
B ILE1DL
B EA02L
130
JOINT (EA02L)
Power window switch, RH
E01 #026
Door, RH
Cab
J09
DD12A
DD11A
1 2 3 6 4 5
5 6 8 7
PW04 PW03D PW03U PWE1DR PW01 BCB7
DL02DU DL02DL DL05L DL05U
Door, LH
E02 #423
Power window motor, LH
UP
Circuit breaker
DOWN
PW02DU
PW02DD
GA2A
E01 #027
Power window switch, LH
POWER WINDOW MOTOR(UP)
WINDOW LOCK
CELOCK
CEUNLOCK
POWER WINDOW MOTOR(DOWN)
POWER WINDOW SW(DOWN)
POWER WINDOW SW(UP)
GND
STARTER SW(M)
+VB
DOOR LOCK SW(UNLOCK)
DOOR LOCK SW(LOCK)
DOOR LOCK ACTUATOR(UNLOCK)
DOOR LOCK ACTUATOR(LOCK)
DD14B
PW02DU 2-R
PW04 P
DL05L Y
DL05U RG
PW02DD 2-G
PW03D 2-YR
PW03U 2-BW
PWE1DR 2-B
PW01 YB
BCB7 2-O
DL01U G
DL01L R
DL02DU 1.25-BR
DL02DL 1.25-RB
E03 #511
Door lock actuator, LH
G DL01U
B DLE1
R DL01L
1.25-BR DL03U
1.25-RB DL03L
FA5A
LOCK
UN-LOCK
Switch
Actu-ator

622-C03611

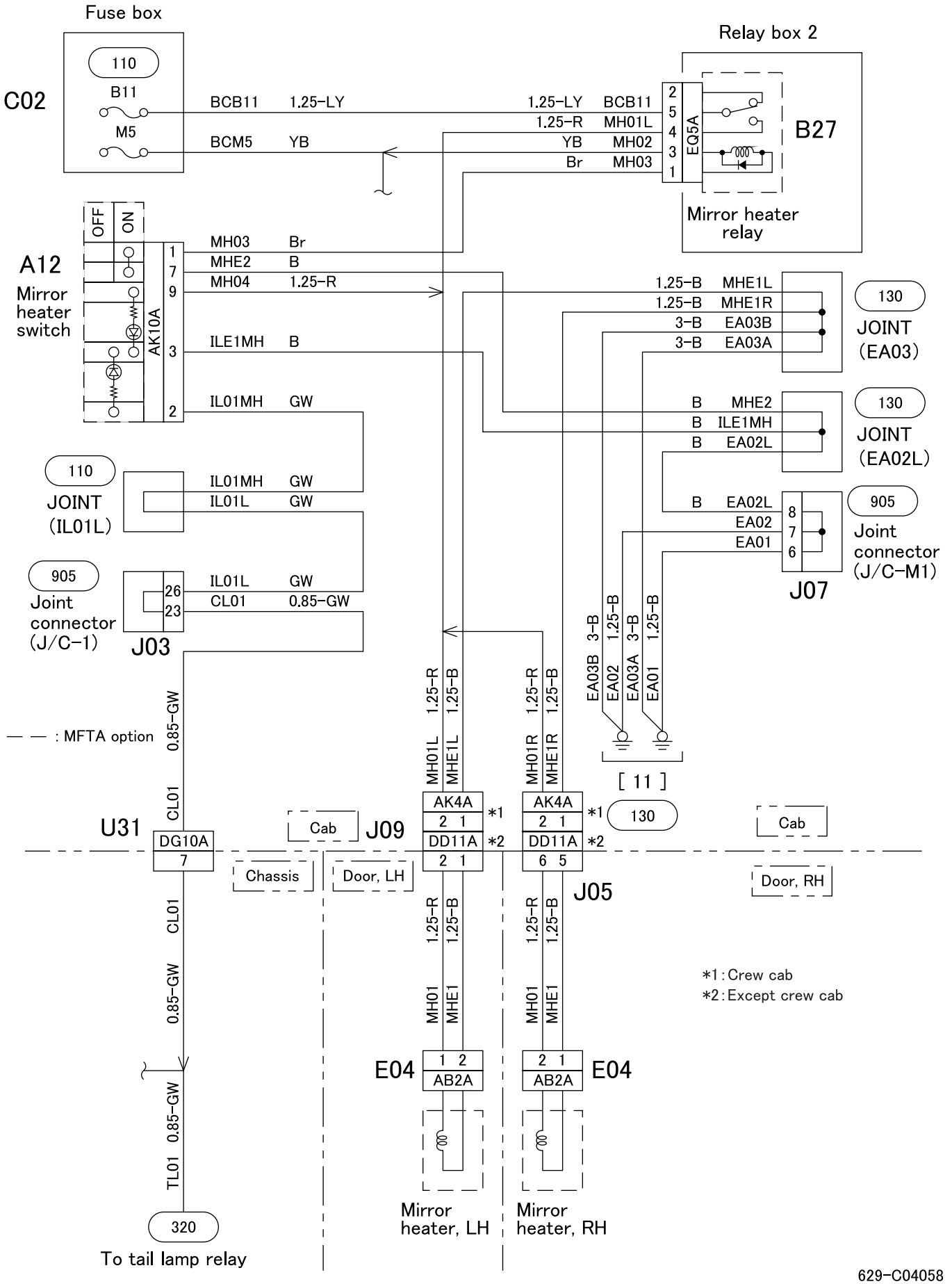
Fuse box
110
B11
M5
C02
BCB11 1.25-LY
BCM5 YB
Relay box 2
1.25-LY BCB11
1.25-R MH01L
YB MH02
Br MH03
2
5
4
3
1
EQ5A
B27
Mirror heater relay
OFF
ON
A12
Mirror heater switch
AK10A
1
7
9
3
2
MH03 Br
MHE2 B
MH04 1.25-R
ILE1MH B
IL01MH GW
1.25-B MHE1L
1.25-B MHE1R
3-B EA03B
3-B EA03A
130
JOINT (EA03)
B MHE2
B ILE1MH
B EA02L
130
JOINT (EA02L)
B EA02L
EA02
EA01
8
7
6
905
Joint connector (J/C-M1)
J07
110
JOINT (IL01L)
IL01MH GW
IL01L GW
905
Joint connector (J/C-1)
J03
26
23
IL01L GW
CL01 0.85-GW
EA03B 3-B
EA02 1.25-B
EA03A 3-B
EA01 1.25-B
[11]
— — : MFTA option
0.85-GW
CL01
U31
DG10A
7
Chassis
Cab
J09
Door, LH
MH01L 1.25-R
MHE1L 1.25-B
AK4A
2 1
*1
DD11A
*2
2 1
MH01R 1.25-R
MHE1R 1.25-B
AK4A
2 1
*1
DD11A
*2
6 5
130
Cab
Door, RH
J05
CL01
0.85-GW
0.85-GW
TL01
320
To tail lamp relay
MH01 1.25-R
MHE1 1.25-B
E04
1 2
AB2A
Mirror heater, LH
MH01 1.25-R
MHE1 1.25-B
2 1
AB2A
E04
Mirror heater, RH
*1 : Crew cab
*2 : Except crew cab

629-C04058

54-07 CHASSIS SIDE ELECTRICAL CIRCUIT

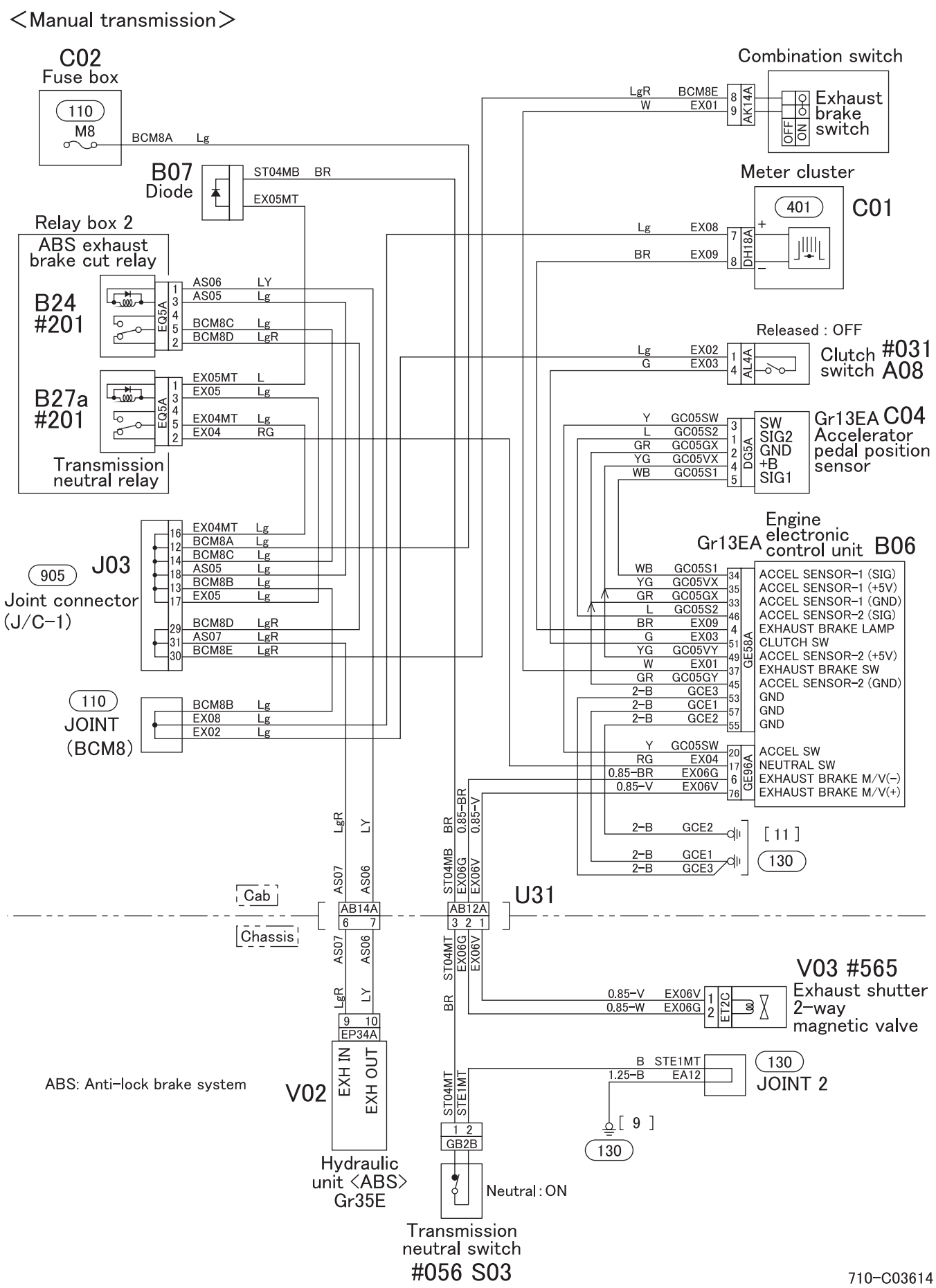
<Manual transmission>
C02
Fuse box
110
M8
BCM8A Lg
B07
Diode
ST04MB BR
EX05MT
Relay box 2
ABS exhaust brake cut relay
B24
#201
EQ5A
AS06 LY
AS05 Lg
BCM8C Lg
BCM8D LgR
B27a
#201
EX05MT L
EX05 Lg
EX04MT Lg
EX04 RG
Transmission neutral relay
905
J03
Joint connector (J/C-1)
EX04MT Lg
BCM8A Lg
BCM8C Lg
AS05 Lg
BCM8B Lg
EX05 Lg
BCM8D LgR
AS07 LgR
BCM8E LgR
110
JOINT (BCM8)
BCM8B Lg
EX08 Lg
EX02 Lg
Combination switch
LgR BCM8E
W EX01
AK14A
Exhaust brake switch
OFF
ON
Meter cluster
401
C01
Lg EX08
BR EX09
DH18A
Released : OFF
Lg EX02
G EX03
AL4A
Clutch switch #031
A08
Y GC05SW
L GC05S2
GR GC05GX
YG GC05VX
WB GC05S1
DG5A
SW
SIG2
GND
+B
SIG1
Gr13EA C04
Accelerator pedal position sensor
Engine electronic control unit B06
Gr13EA
WB GC05S1
YG GC05VX
GR GC05GX
L GC05S2
BR EX09
G EX03
YG GC05VY
W EX01
GR GC05GY
2-B GCE3
2-B GCE1
2-B GCE2
GE58A
ACCEL SENSOR-1 (SIG)
ACCEL SENSOR-1 (+5V)
ACCEL SENSOR-1 (GND)
ACCEL SENSOR-2 (SIG)
EXHAUST BRAKE LAMP
CLUTCH SW
ACCEL SENSOR-2 (+5V)
EXHAUST BRAKE SW
ACCEL SENSOR-2 (GND)
GND
GND
GND
Y GC05SW
RG EX04
0.85-BR EX06G
0.85-V EX06V
GE96A
ACCEL SW
NEUTRAL SW
EXHAUST BRAKE M/V(-)
EXHAUST BRAKE M/V(+)
2-B GCE2
2-B GCE1
2-B GCE3
[11]
130
Cab
Chassis
U31
AB14A
AB12A
LgR LY AS07 AS06
BR 0.85-BR 0.85-V ST04MB EX06G EX06V
ST04MT EX06G EX06V
V03 #565
Exhaust shutter 2-way magnetic valve
0.85-V EX06V
0.85-W EX06G
ET2C
EP34A
V02
EXH IN
EXH OUT
Hydraulic unit <ABS> Gr35E
ABS: Anti-lock brake system
B STE1MT
1.25-B EA12
130
JOINT 2
[9]
130
ST04MT STE1MT
GB2B
Neutral : ON
Transmission neutral switch
#056 S03

710-C03614

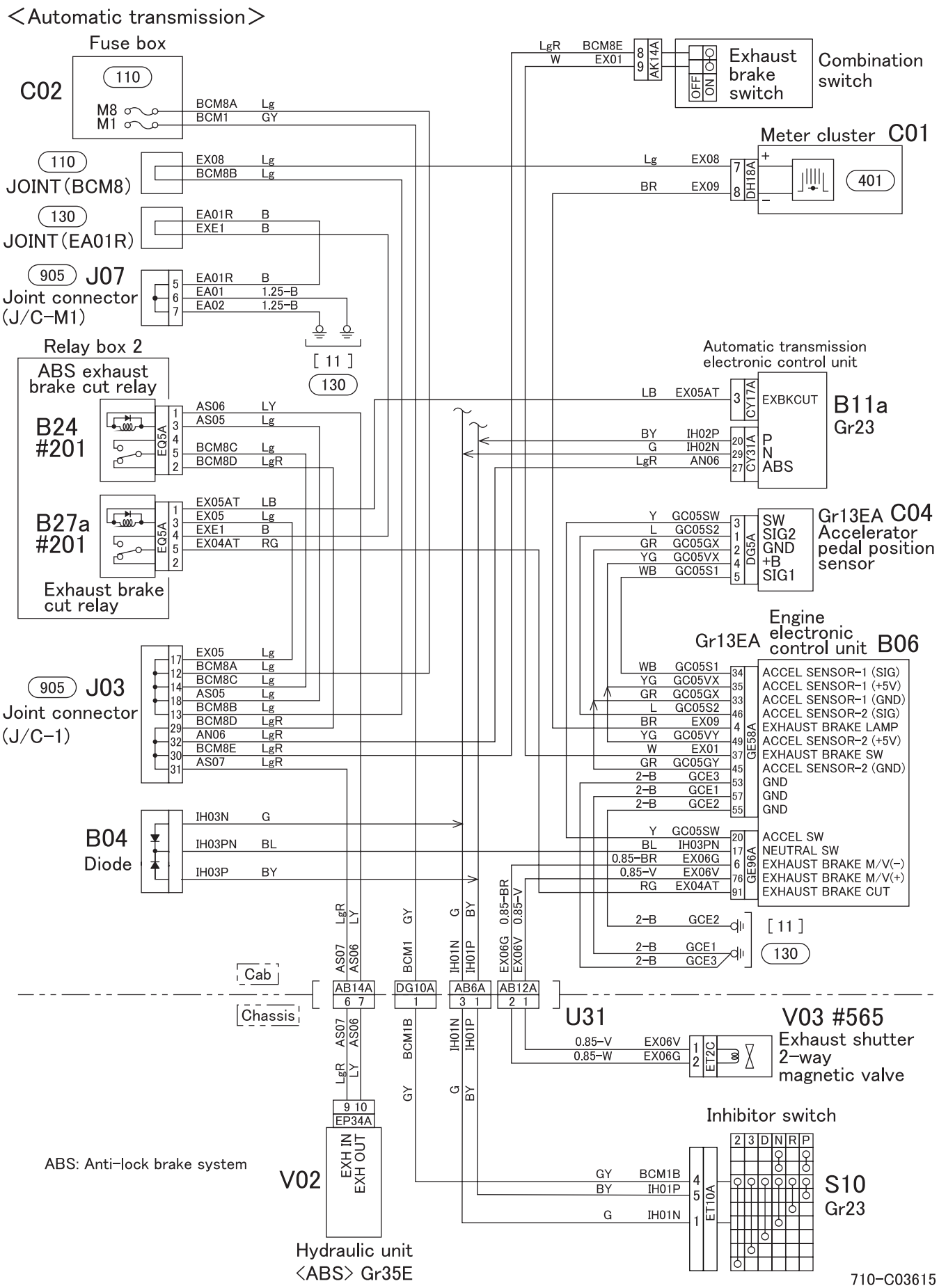
<Automatic transmission>
Fuse box
C02
110
M8
M1
BCM8A Lg
BCM1 GY
110
JOINT (BCM8)
EX08 Lg
BCM8B Lg
130
JOINT (EA01R)
EA01R B
EXE1 B
905 J07
Joint connector (J/C-M1)
EA01R B
EA01 1.25-B
EA02 1.25-B
[11]
130
Relay box 2
ABS exhaust brake cut relay
B24 #201
EQ5A
AS06 LY
AS05 Lg
BCM8C Lg
BCM8D LgR
B27a #201
EQ5A
EX05AT LB
EX05 Lg
EXE1 B
EX04AT RG
Exhaust brake cut relay
905 J03
Joint connector (J/C-1)
EX05 Lg
BCM8A Lg
BCM8C Lg
AS05 Lg
BCM8B Lg
BCM8D LgR
AN06 LgR
BCM8E LgR
AS07 LgR
B04
Diode
IH03N G
IH03PN BL
IH03P BY
LgR BCM8E
W EX01
AK14A
Exhaust brake switch
OFF
ON
Combination switch
Meter cluster C01
Lg EX08
BR EX09
DH18A
401
Automatic transmission electronic control unit
LB EX05AT
CY17A
EXBKCUT
B11a
Gr23
BY IH02P
G IH02N
LgR AN06
CY31A
P
N
ABS
Y GC05SW
L GC05S2
GR GC05GX
YG GC05VX
WB GC05S1
DG5A
SW
SIG2
GND
+B
SIG1
Gr13EA C04
Accelerator pedal position sensor
Engine electronic control unit B06
Gr13EA
WB GC05S1
YG GC05VX
GR GC05GX
L GC05S2
BR EX09
YG GC05VY
W EX01
GR GC05GY
2-B GCE3
2-B GCE1
2-B GCE2
GE58A
ACCEL SENSOR-1 (SIG)
ACCEL SENSOR-1 (+5V)
ACCEL SENSOR-1 (GND)
ACCEL SENSOR-2 (SIG)
EXHAUST BRAKE LAMP
ACCEL SENSOR-2 (+5V)
EXHAUST BRAKE SW
ACCEL SENSOR-2 (GND)
GND
GND
GND
Y GC05SW
BL IH03PN
0.85-BR EX06G
0.85-V EX06V
RG EX04AT
GE96A
ACCEL SW
NEUTRAL SW
EXHAUST BRAKE M/V(-)
EXHAUST BRAKE M/V(+)
EXHAUST BRAKE CUT
2-B GCE2
2-B GCE1
2-B GCE3
[11]
130
Cab
Chassis
AB14A
DG10A
AB6A
AB12A
U31
0.85-V EX06V
0.85-W EX06G
ET2C
V03 #565
Exhaust shutter 2-way magnetic valve
Inhibitor switch
2 3 D N R P
GY BCM1B
BY IH01P
G IH01N
ET10A
S10
Gr23
9 10
EP34A
EXH IN
EXH OUT
V02
Hydraulic unit
<ABS> Gr35E
ABS: Anti-lock brake system

710-C03615

54-08 ENGINE AND TRANSMISSION SIDE ELECTRICAL CIRCUIT

810 FOUR-WHEEL DRIVE CIRCUIT <FG>

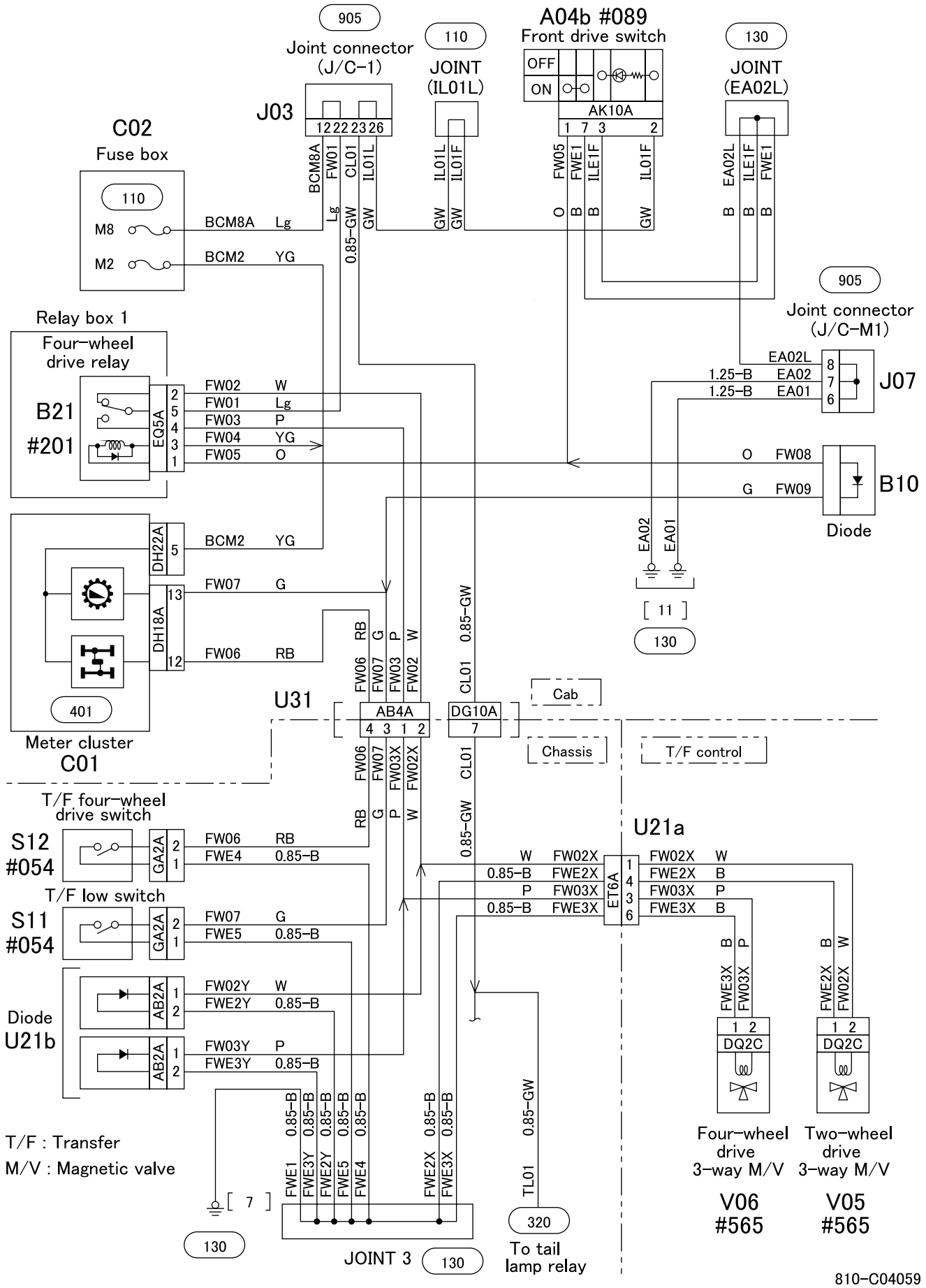

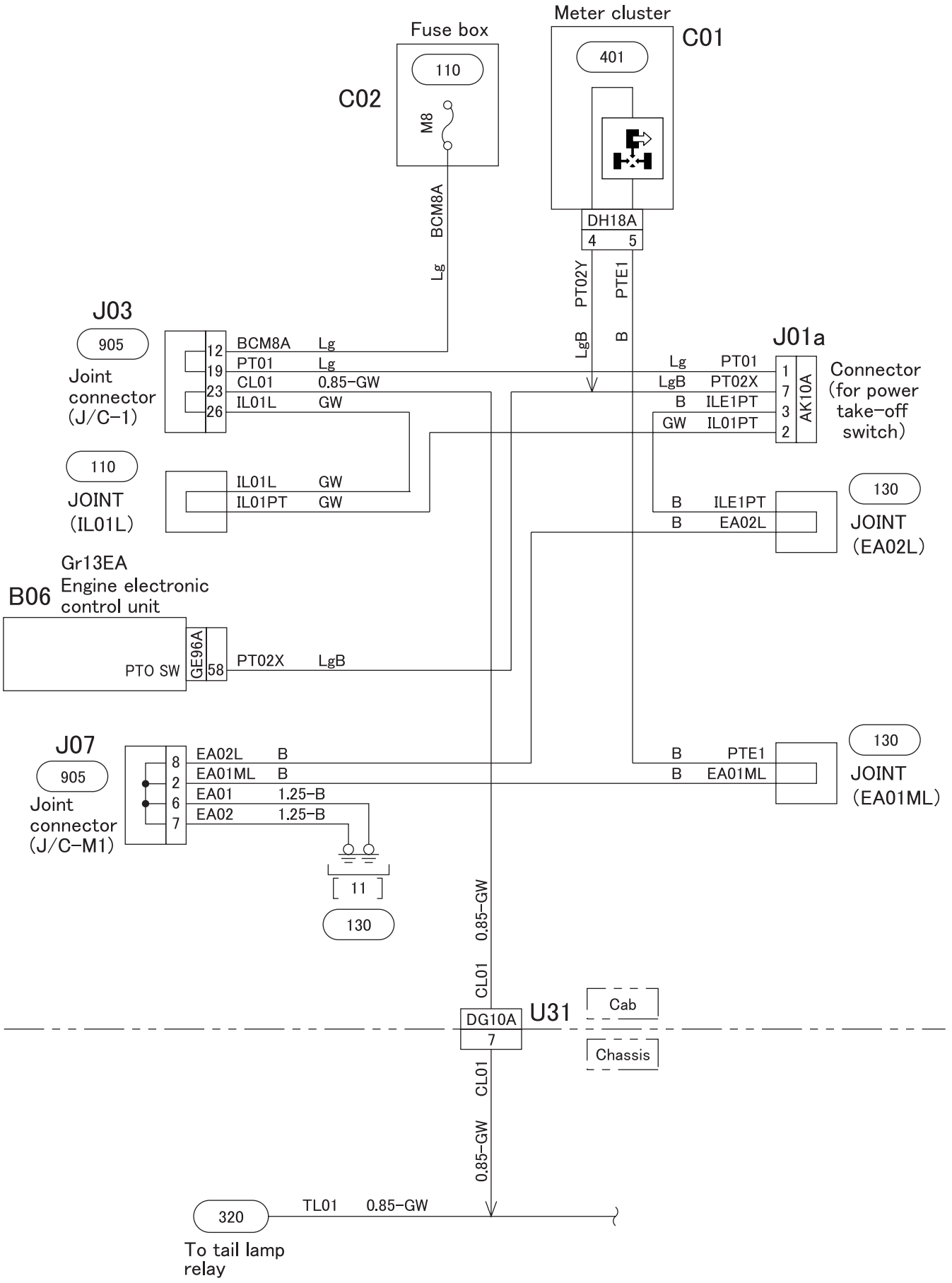
Meter cluster
C01
401
Fuse box
C02
110
M8
BCM8A
Lg
DH18A
4 5
PT02Y
LgB
PTE1
B
J03
905
Joint connector (J/C-1)
12 BCM8A Lg
19 PT01 Lg
23 CL01 0.85-GW
26 IL01L GW
J01a
Lg PT01
LgB PT02X
B ILE1PT
GW IL01PT
1 7 3 2
AK10A
Connector (for power take-off switch)
110
JOINT (IL01L)
IL01L GW
IL01PT GW
130
JOINT (EA02L)
B ILE1PT
B EA02L
Gr13EA
Engine electronic control unit
B06
PTO SW
GE96A
58
PT02X LgB
J07
905
Joint connector (J/C-M1)
8 EA02L B
2 EA01ML B
6 EA01 1.25-B
7 EA02 1.25-B
11
130
130
JOINT (EA01ML)
B PTE1
B EA01ML
CL01 0.85-GW
DG10A
7
U31
Cab
Chassis
CL01
0.85-GW
320
TL01 0.85-GW
To tail lamp relay

850-C04913

54-09 OTHER CIRCUIT

(J/C-1)

1	2	3	4	5	6	7	8	9	10	11
EA07	EA08	EDE1V	EVE1	EVE2	EVE3	ANE1	ANE2	MVE1		MVE2
12	13	14	15	16	17	18	19	20	21	22
BCM8A	BCM8B	BCM8C	CS09	EX04MT	EX05	AS05	PT01	—		FW01
23	24	25	26	27	28	29	30	31	32	33
CL01		CL01R	IL01L	IL01R	—	BCM8D	BCM8E	AS07	AN06	—

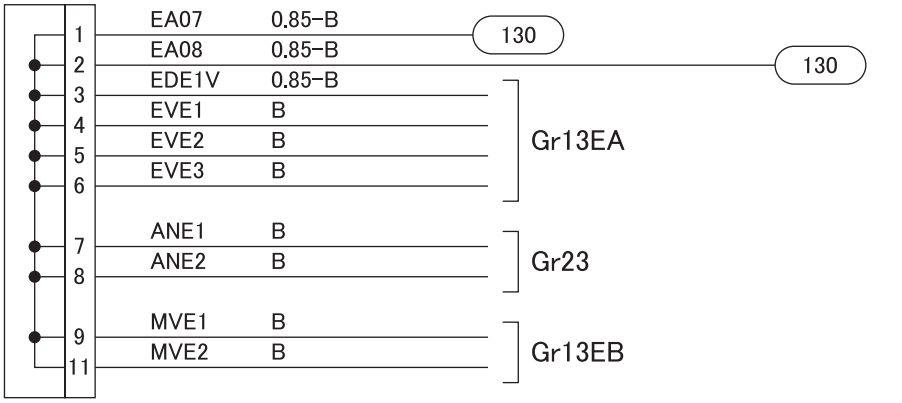

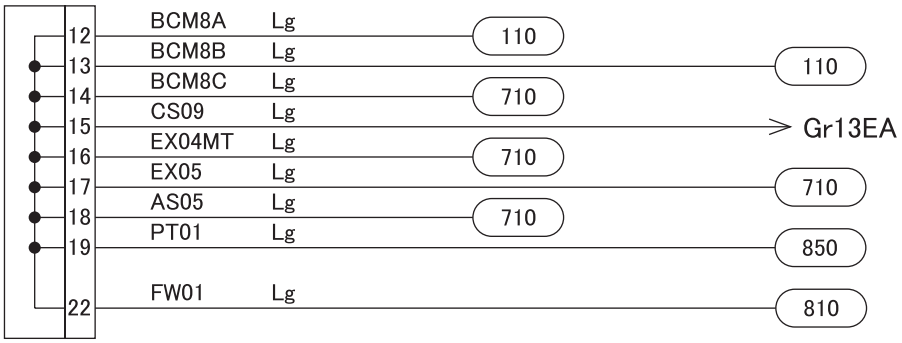

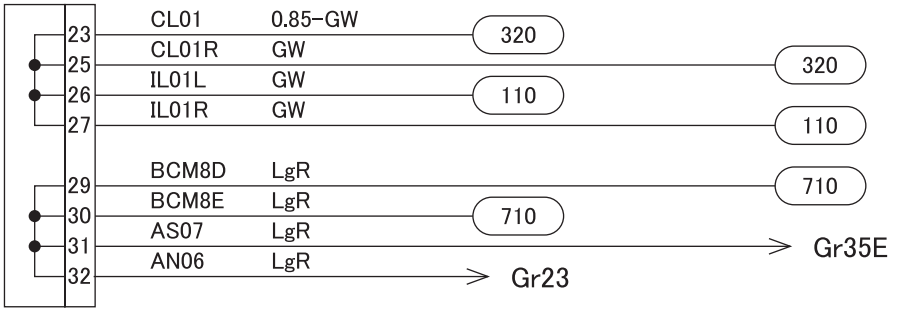

905-C04835

(J/C-2)

1	2	3	4	5	6	7	8	9	10	11
IJ01V	IJ01Vs	IJ02V	IJ02Vs	IJ03V	IJ03Vs	IJ04V	IJ04Vs		CS12A	CS12B
12	13	14	15	16	17	18	19	20	21	22
IJ01G	IJ01Gs	IJ02G	IJ02Gs	IJ03G	IJ03Gs	IJ04G	IJ04Gs		—	—

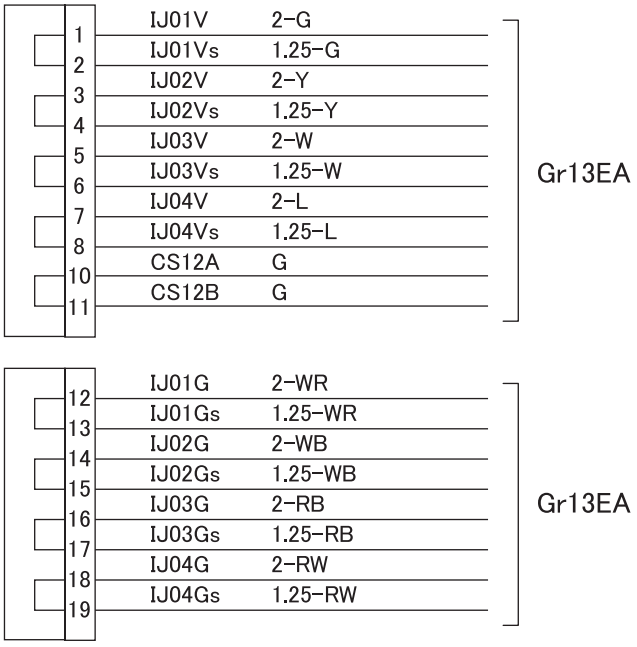

905-C03618

(J/C-M1)

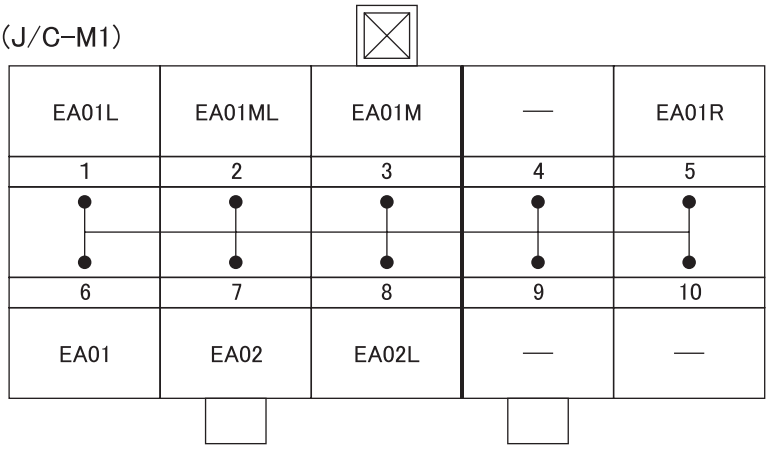

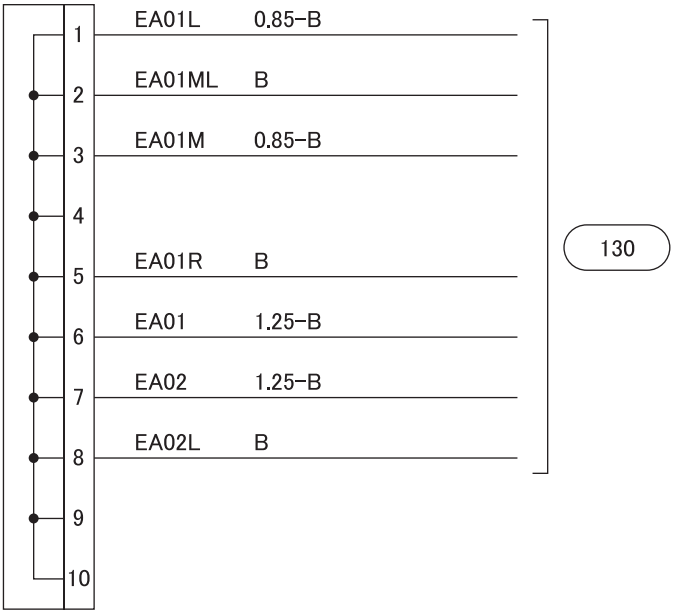

905-C03619

(J/C-040)

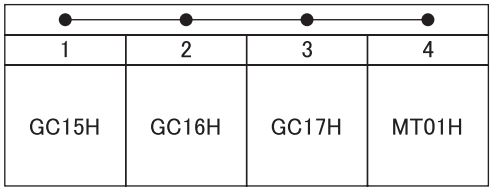

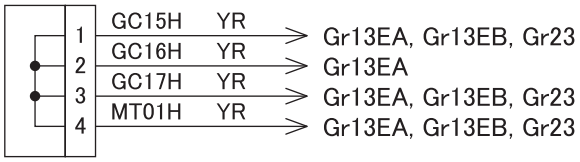

(J/C-040)

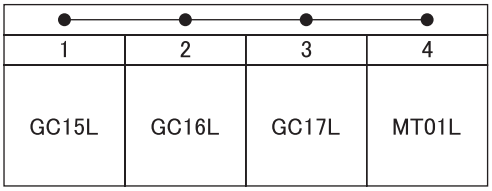

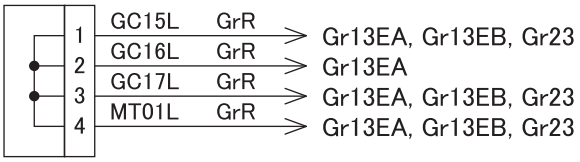

(J/C-040)

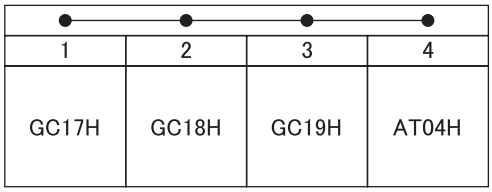

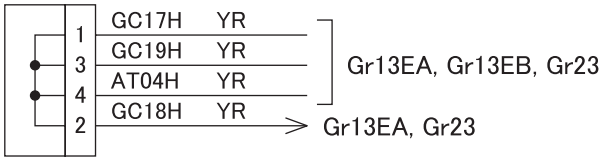

(J/C-040)

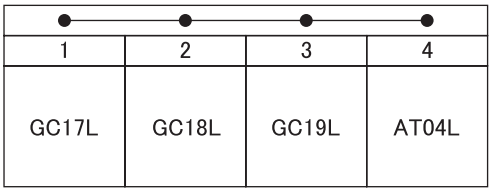

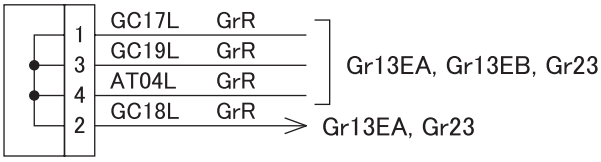

(J/C-040)

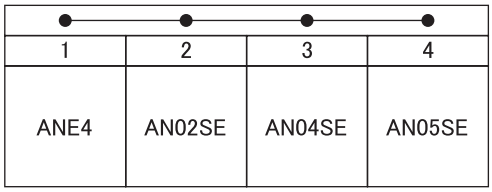

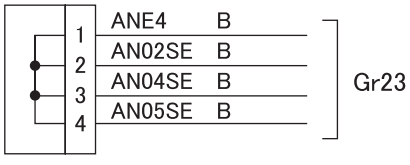

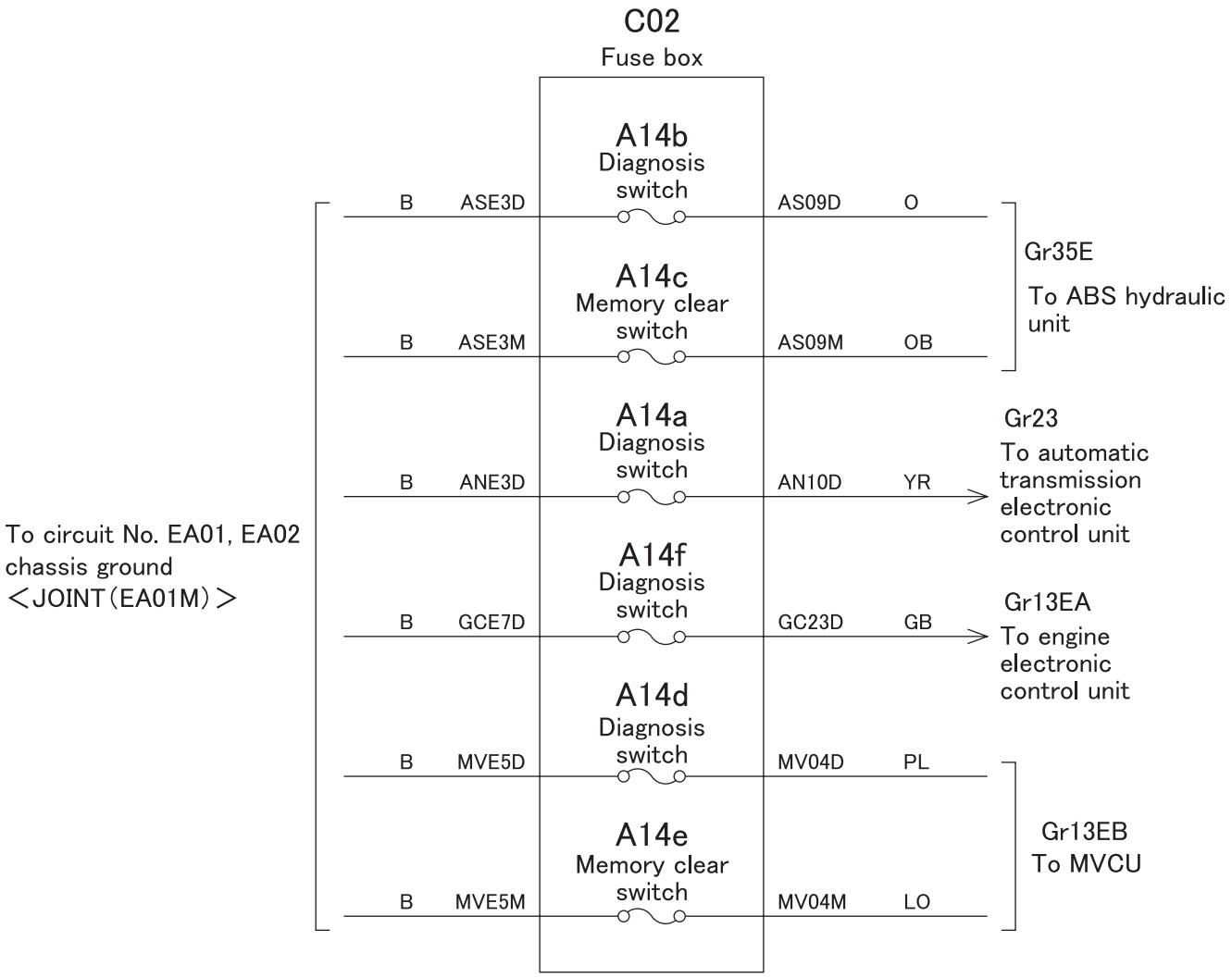

The fuse is substituted for diagnosis switch and the memory clear switch.

MVCU : Multifunction vehicle control unit
ABS : Anti-lock brake system

907-C03620

54-10 ELECTRICAL EQUIPMENT INSTALLATION POSITIONS

A01 to 14

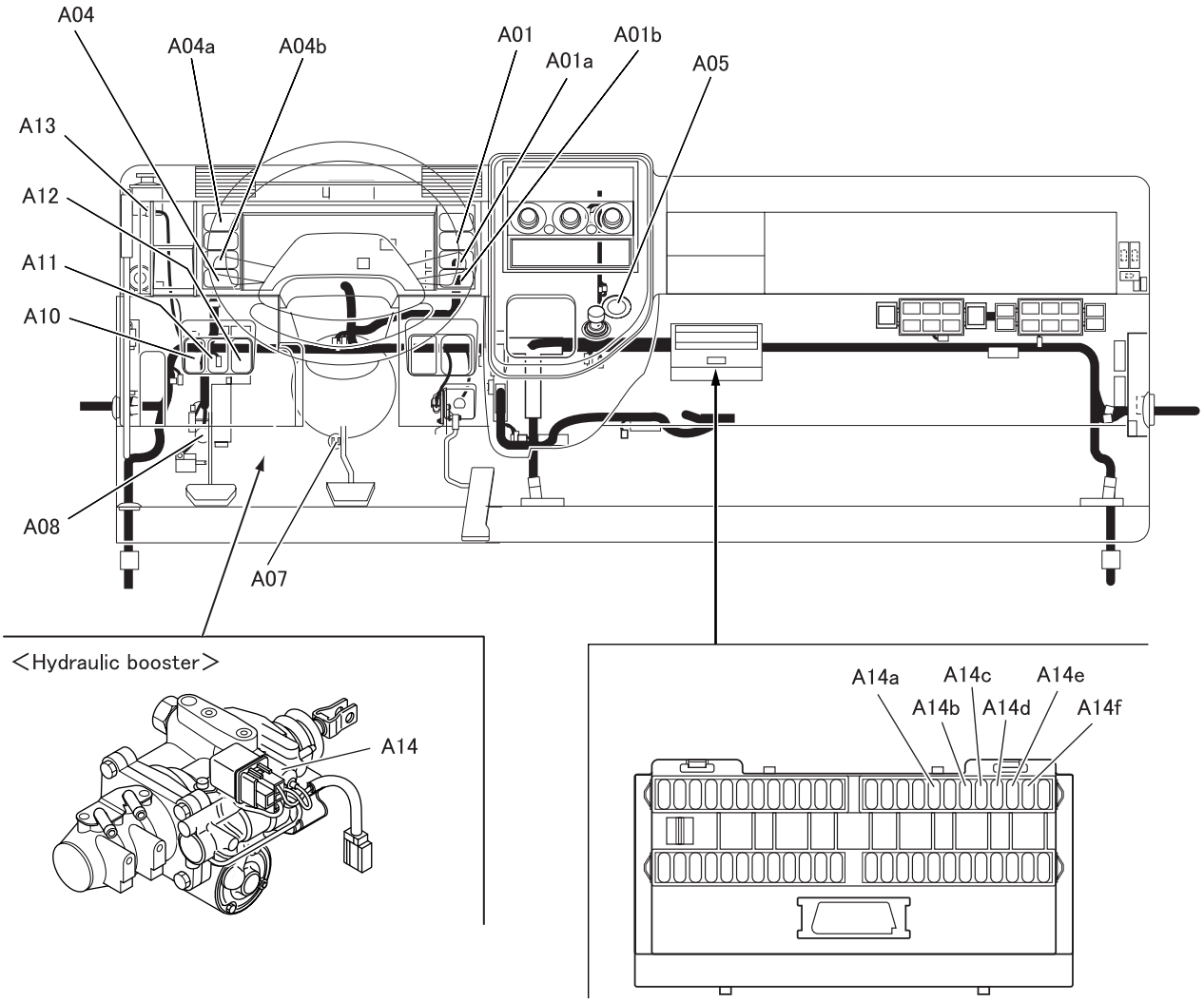

No relevant parts in a missing number

A01	Engine oil level check switch
A01a	Cruise control main switch <A/T>
A01b	Set and resume switch <A/T>
A04	Door lock switch
A04a	DPF cleaning switch
A04b	Front drive switch <FG>
A05	Hazard switch
A07	Stop lamp switch
A08	Clutch switch (Upper)
A10	Van body dome light switch
A11	Rheostat switch
A12	Mirror heater switch
A13	Brake fluid level switch
A14	Flow switch <With hydraulic booster>
A14a	Diagnosis switch <A/T>
A14b	Diagnosis switch <ABS>
A14c	Memory clear switch <ABS>
A14d	Diagnosis switch <MVCU>
A14e	Memory clear switch <MVCU>
A14f	Diagnosis switch <Engine ECU>

ECU : Electronic control unit
ABS : Anti-lock brake system
MVCU : Multifunction vehicle control unit
DPF : Diesel particulate filter
A/T : Automatic transmission

L03344

A15 to 22

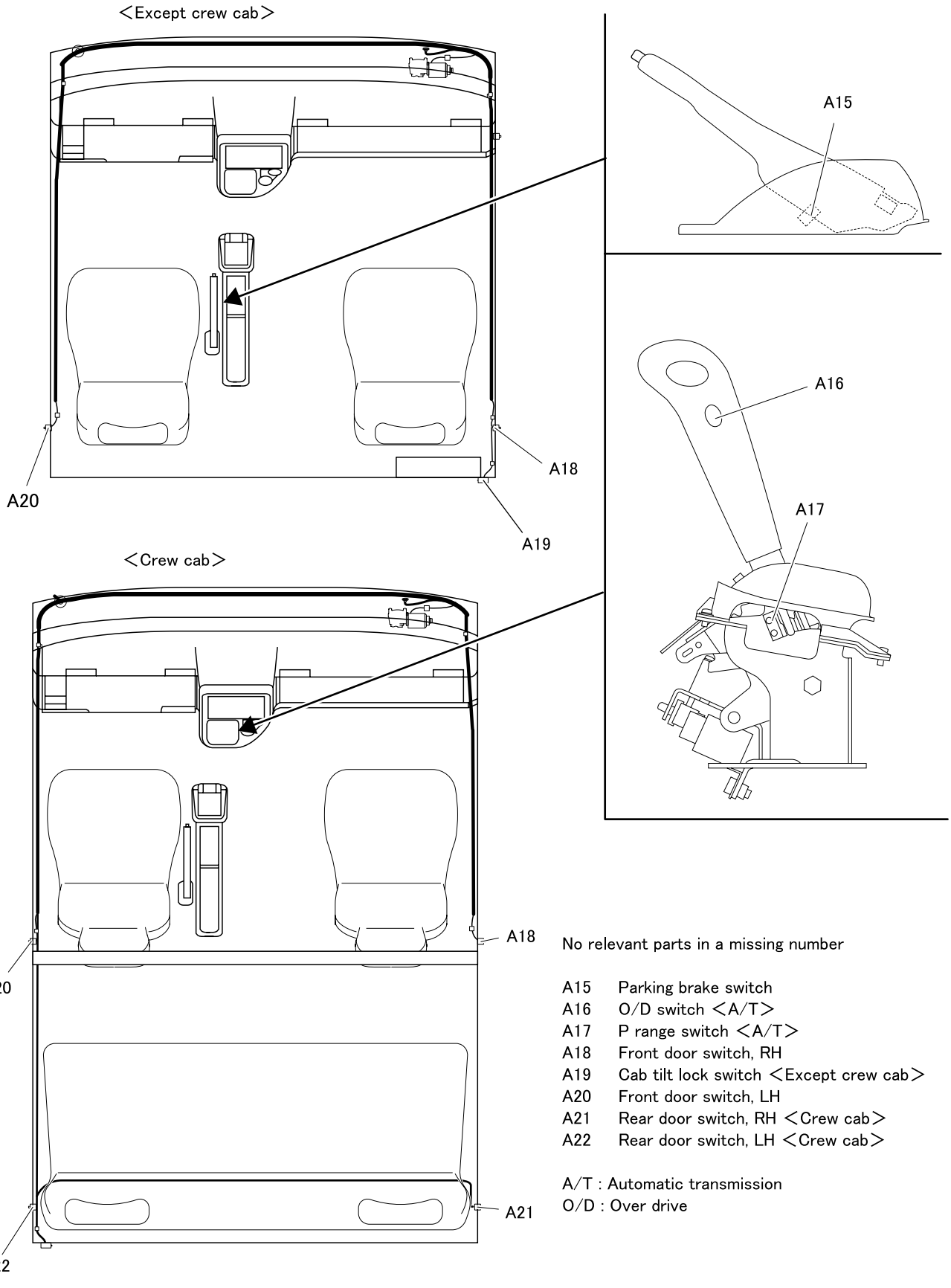

No relevant parts in a missing number

A15 Parking brake switch
A16 O/D switch <A/T>
A17 P range switch <A/T>
A18 Front door switch, RH
A19 Cab tilt lock switch <Except crew cab>
A20 Front door switch, LH
A21 Rear door switch, RH <Crew cab>
A22 Rear door switch, LH <Crew cab>

A/T : Automatic transmission
O/D : Over drive

L02714

A60

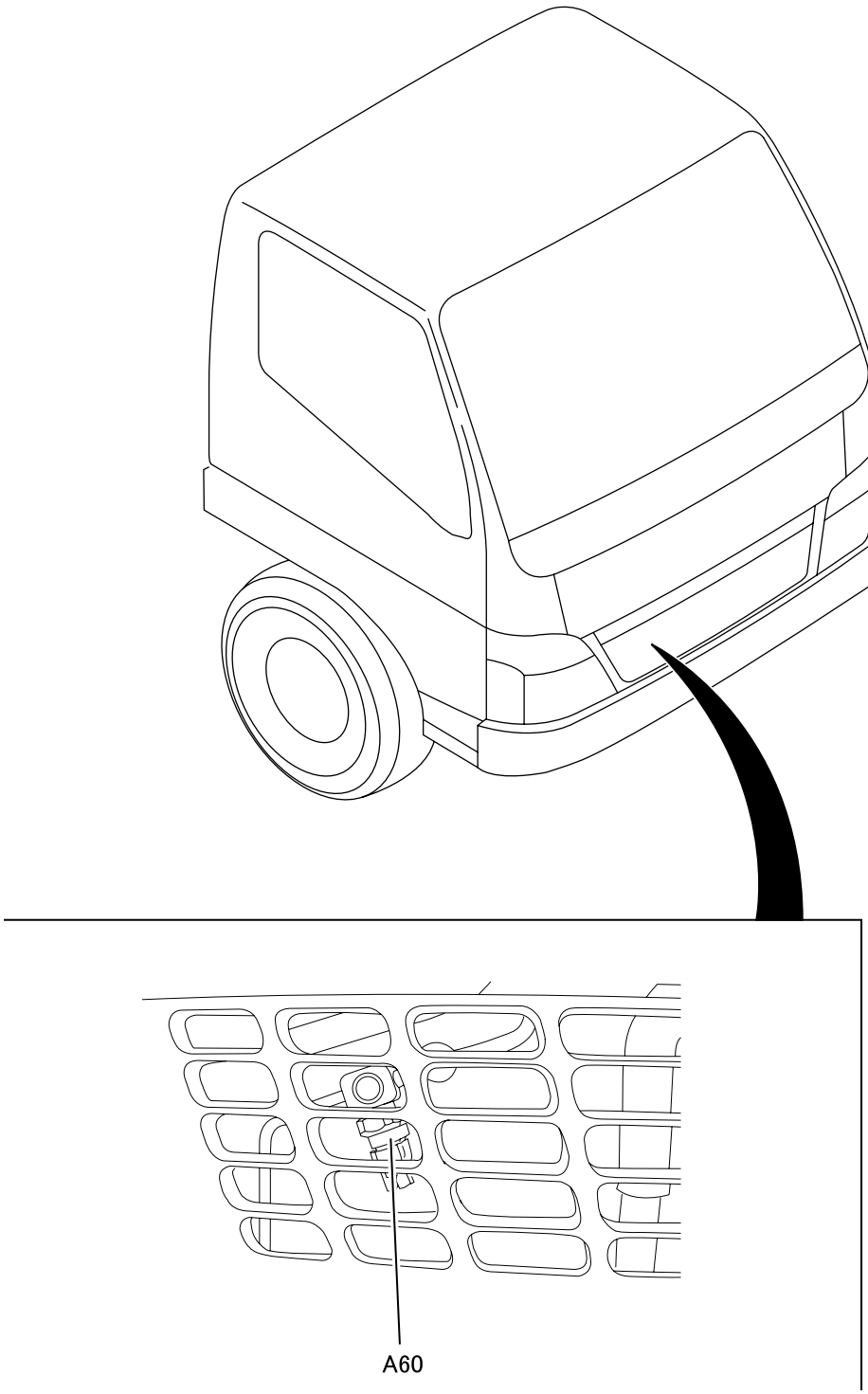

A60 Dual pressure switch <With air-conditioner>

L00160

M E M O

B RELAY AND ELECTRONIC CONTROL UNIT

B02 to 35

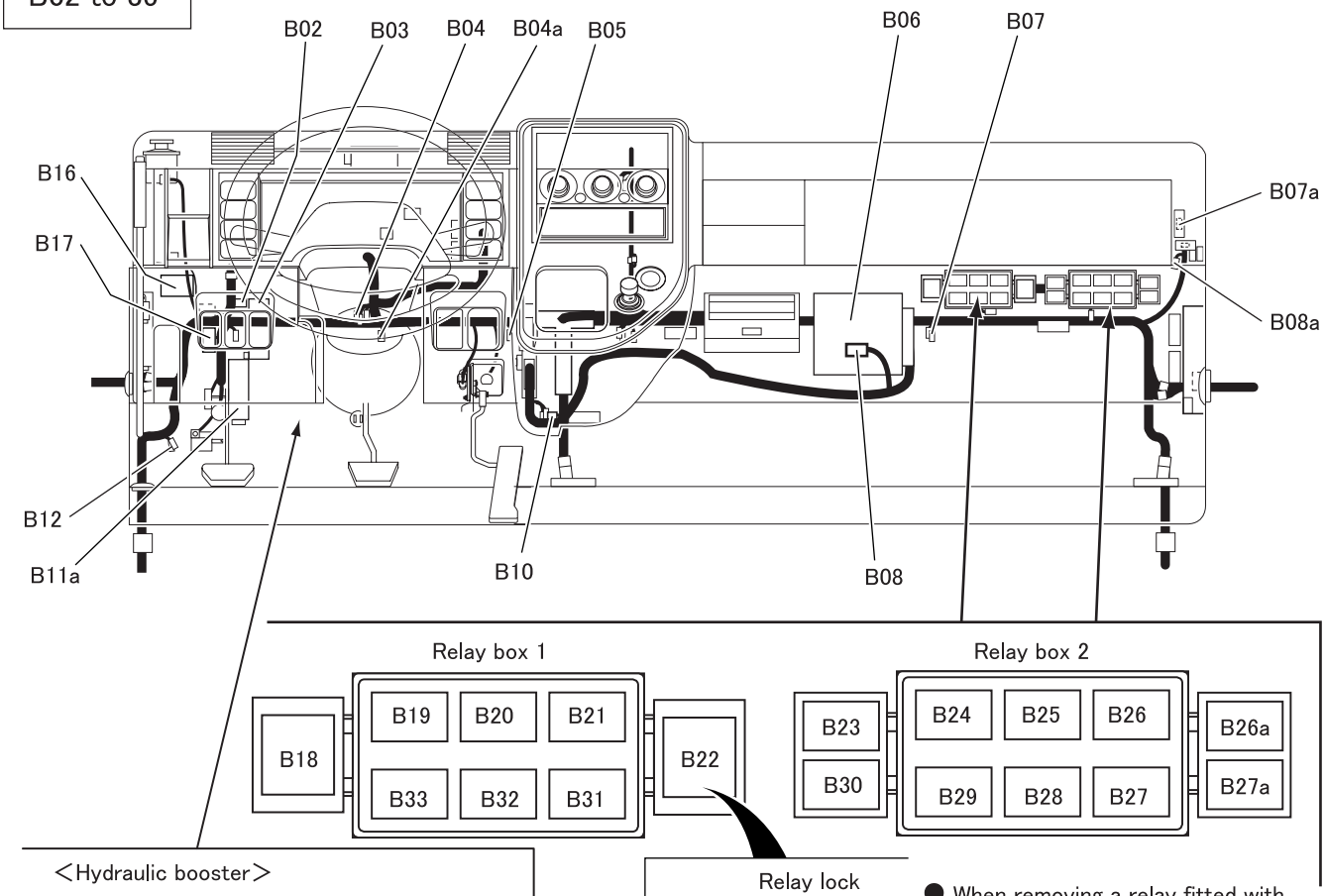

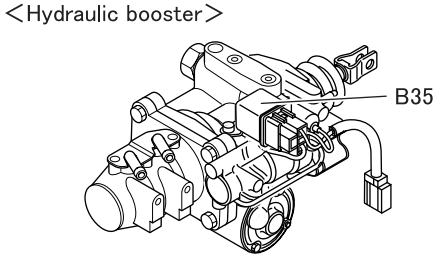

No relevant parts in a missing number

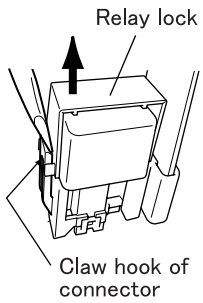

● When removing a relay fitted with a relay lock, disengage the claw hook of the connector with a flat-blade screwdriver and open the relay lock. Then remove the relay.

● When installing the relay, fit the relay in position and securely engage the claw hook of the connector with the relay lock.

B02 Diode
B03 Flasher unit
B04 Diode
B04a Diode
B05 Wiper electronic control unit
B06 Engine ECU
B07 Diode
B07a Turbocharger EDU
B08 Resistor unit
B08a Resistor unit
B10 Diode
B11a A/T ECU
B12 Diode
Resistor unit
B16 Daytime running light ECU
B17 Key interlock control unit
B18 Wiper relay (HIGH)
B19 Headlamp relay (LOW)
B20 Headlamp relay (HIGH)
B21 Stop lamp relay
Four-wheel drive relay ＜FG＞
B22 Wiper relay (LOW)
B23 Turn signal lamp relay
B24 ABS exhaust brake cut relay
B25 Glow drive relay
B26 Blower motor relay
B26a Engine start relay ＜M/T＞
Neutral start relay ＜A/T＞
B27 Mirror heater relay
B27a T/M neutral relay ＜M/T＞
Exhaust brake cut relay ＜A/T＞
B28 Overheating relay
B29 Engine oil level relay
B30 Daytime running light relay
B31 Cruise control main relay ＜MVCU＞
B32 Parking brake relay ＜With hydraulic booster＞
B33 Safety relay
B35 Emergency pump motor relay
＜With hydraulic booster＞

A/T : Automatic transmission
ABS : Anti-lock brake system
ECU : Electronic control unit
M/T : Manual transmission
T/M : Transmission
EDU : Electronic drive unit
MVCU : Multifunction vehicle control unit

L03345

B41 to 42

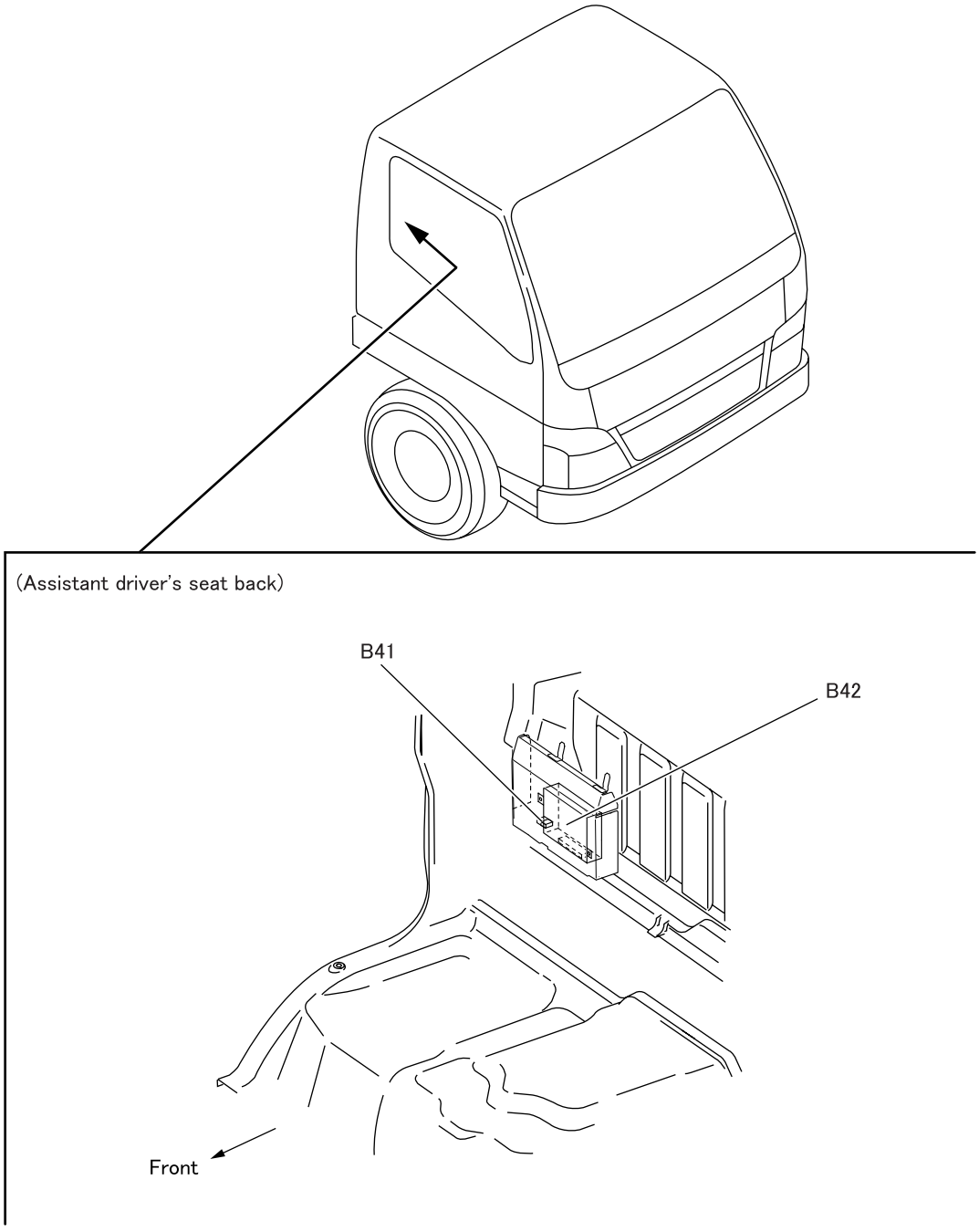

B41 Resistor unit
B42 MVCU

MVCU : Multifunction vehicle control unit

L02138

C01 to 09

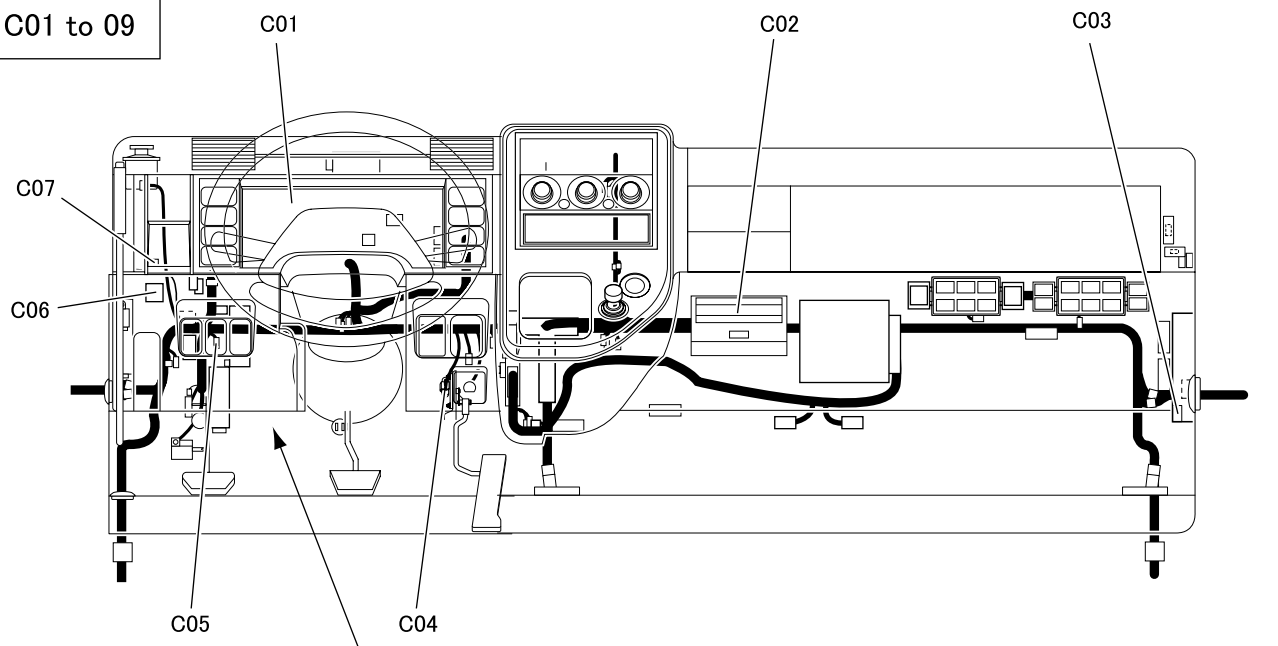

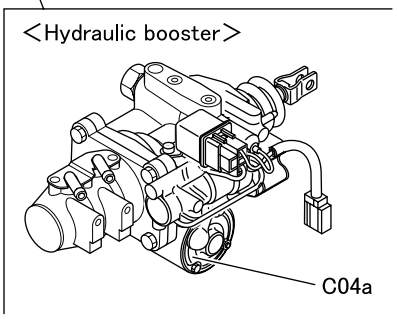

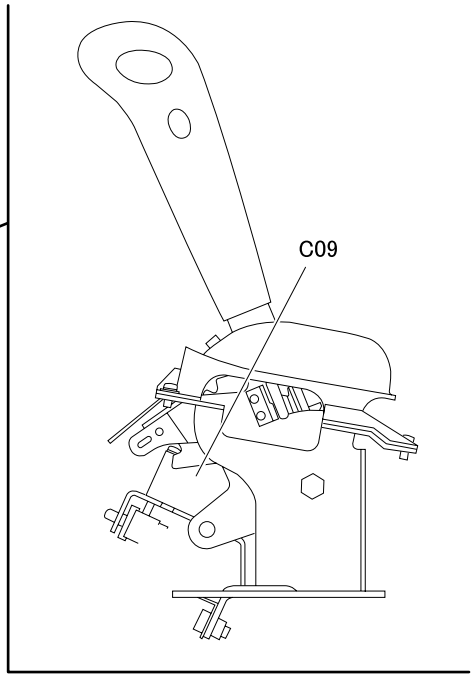

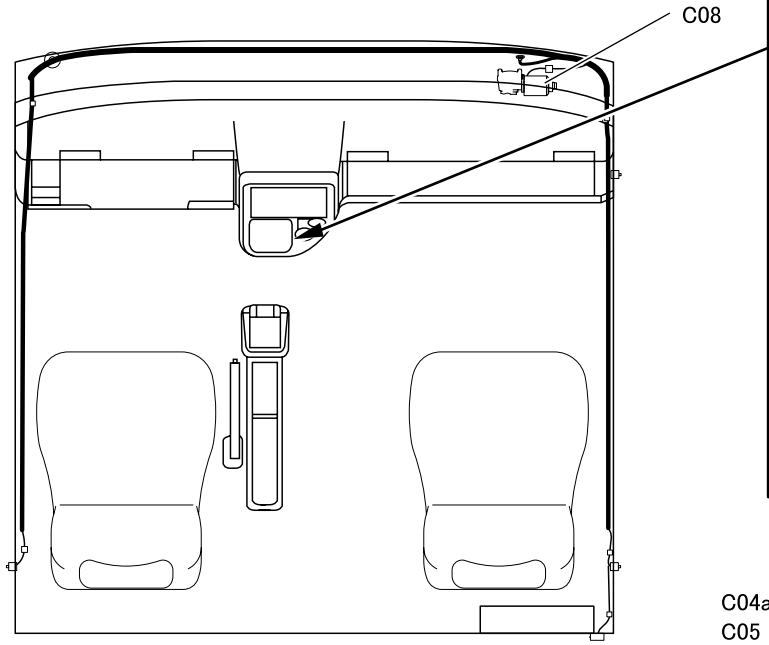

No relevant parts in a missing number

C01 Meter cluster
C02 Fuse box
C03 Windshield washer motor
C04 Accelerator pedal position sensor
C04a Motor ＜With hydraulic booster＞
C05 G sensor ＜FG＞
C06 Cab tilt buzzer
C07 Warning buzzer
C08 Wiper motor
C09 Shift lock actuator ＜A/T＞

A/T : Automatic transmission

L02716

D01 to 05

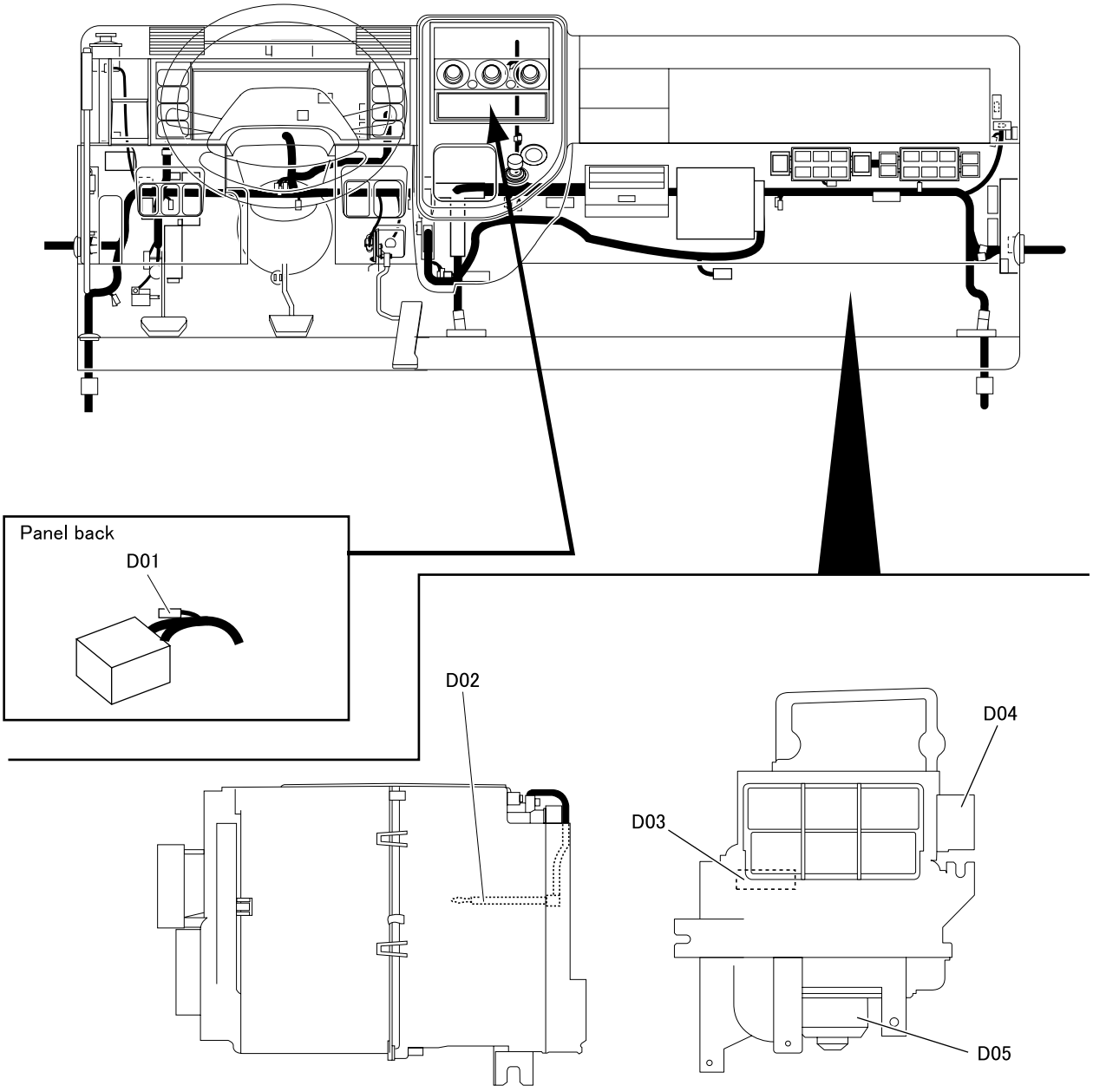

No relevant parts in a missing number

D01 Diode
D02 Thermostat
D03 Blower resistor
D04 Fresh/recirculation changeover motor
D05 Blower motor

L02140

E01 to 04

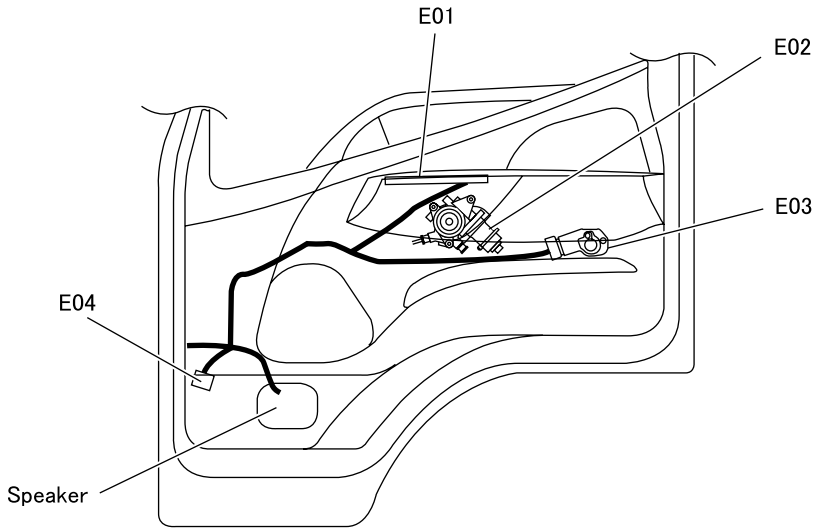

This illustrations show the right side door, the left side door is symmetrical.

No relevant parts in a missing number

E01 Power window switch <Except crew cab>
E02 Power window motor <Except crew cab>
E03 Door lock actuator <Except crew cab>
E04 Mirror heater connector

L02717

F01 to 05 <Except crew cab>

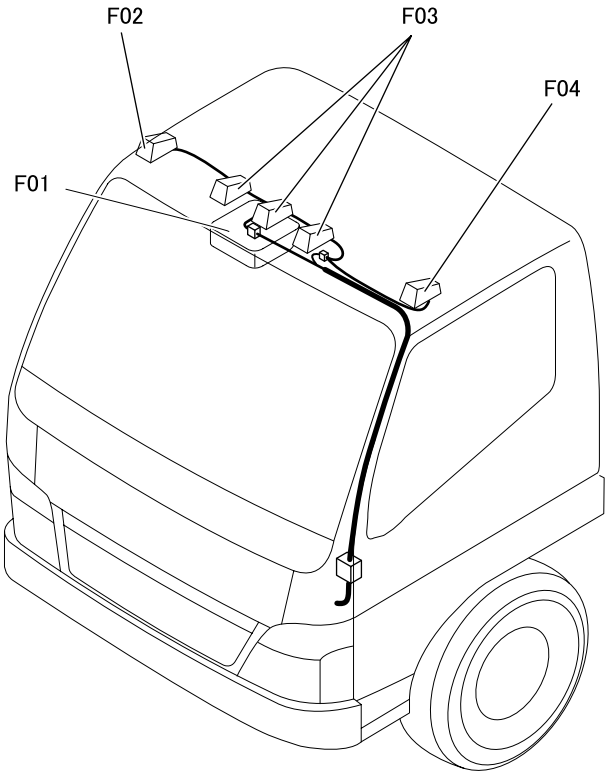

No relevant parts in a missing number

F01 Cab lamp
F02 Clearance and side marker lamp, RH
F03 Identification lamp
F04 Clearance and side marker lamp, LH
F05 Rear cab lamp <Crew cab>

<Crew cab>

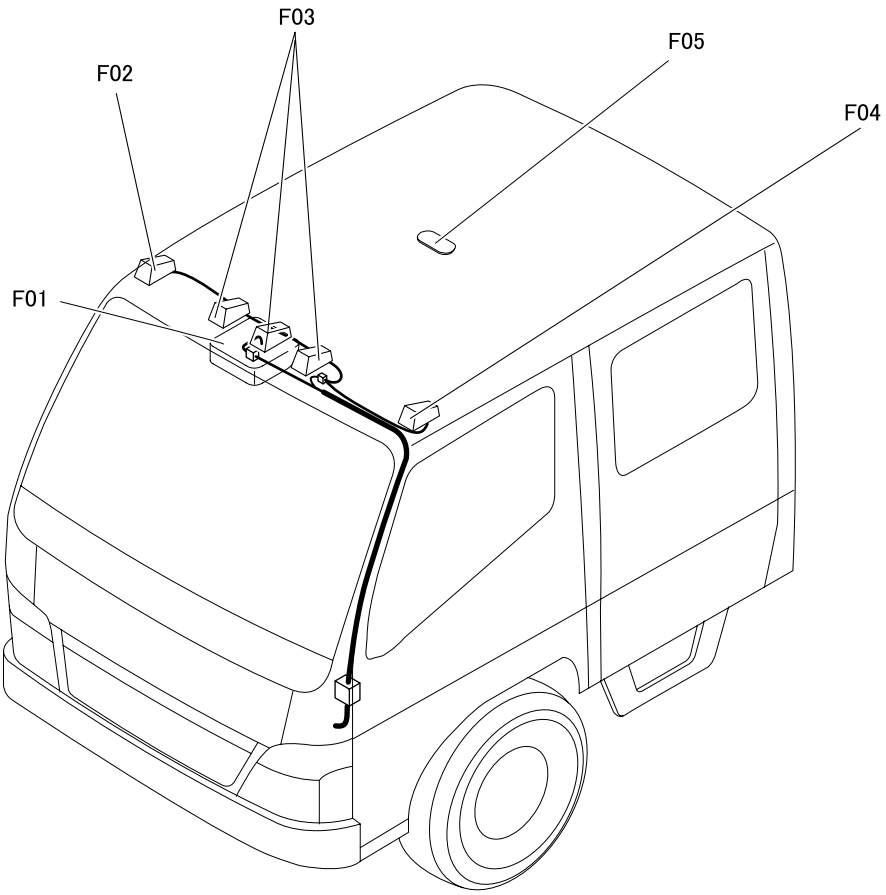

L00164

J JOINTS OF MAIN HARNESS CONNECTORS

J01 to 11

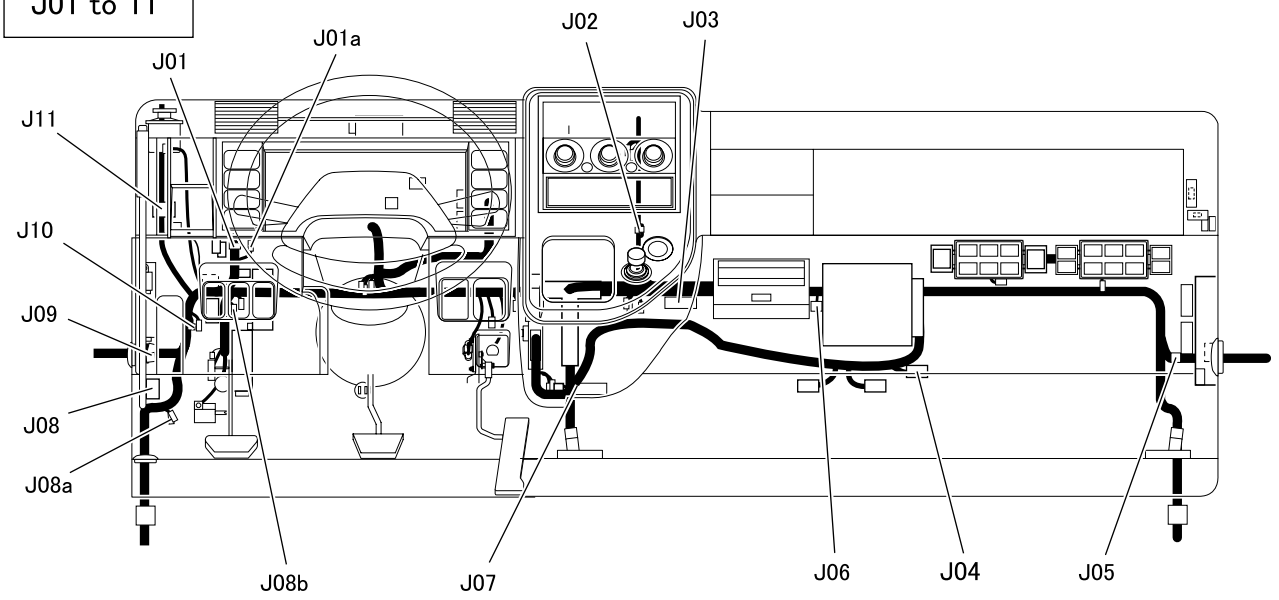

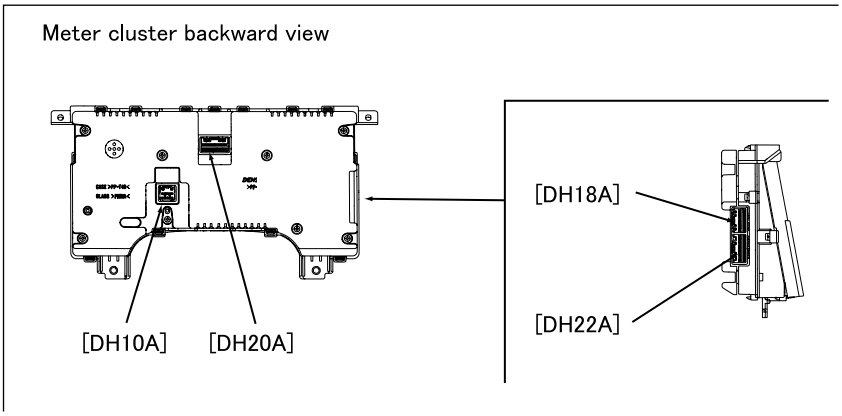

No relevant parts in a missing number

J01 Connection of cab harness and instrument panel harness
J01a Connector (For power take-off switch)
J02 Connection of cab harness and center panel harness
J03 Joint connector (J/C-1)
J04 Joint connector (J/C-2)
J05 Connection of cab harness and door harness, RH
J06 Connection of center panel harness and air-conditioner harness
J07 Joint connector (J/C-M1)
J08 Diagnostic connector
J08a Joint connector (J/C-040)
J08b Joint connector (J/C-040) <A/T>
J09 Connection of cab harness and door harness, LH
J10 Optional connector
J11 Connection of cab harness and roof harness

A/T : Automatic transmission
Indicate by connector type [ ].

L03346

J12

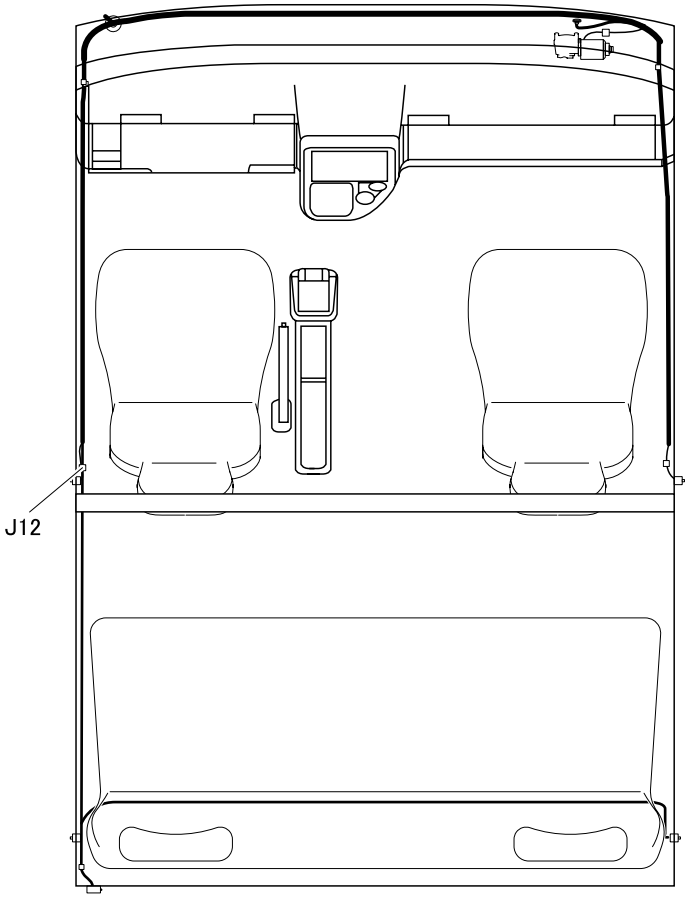

No relevant parts in a missing number

J12　Connection of cab harness and rear door switch harness ＜Crew cab＞

R01 to 19

Upper view

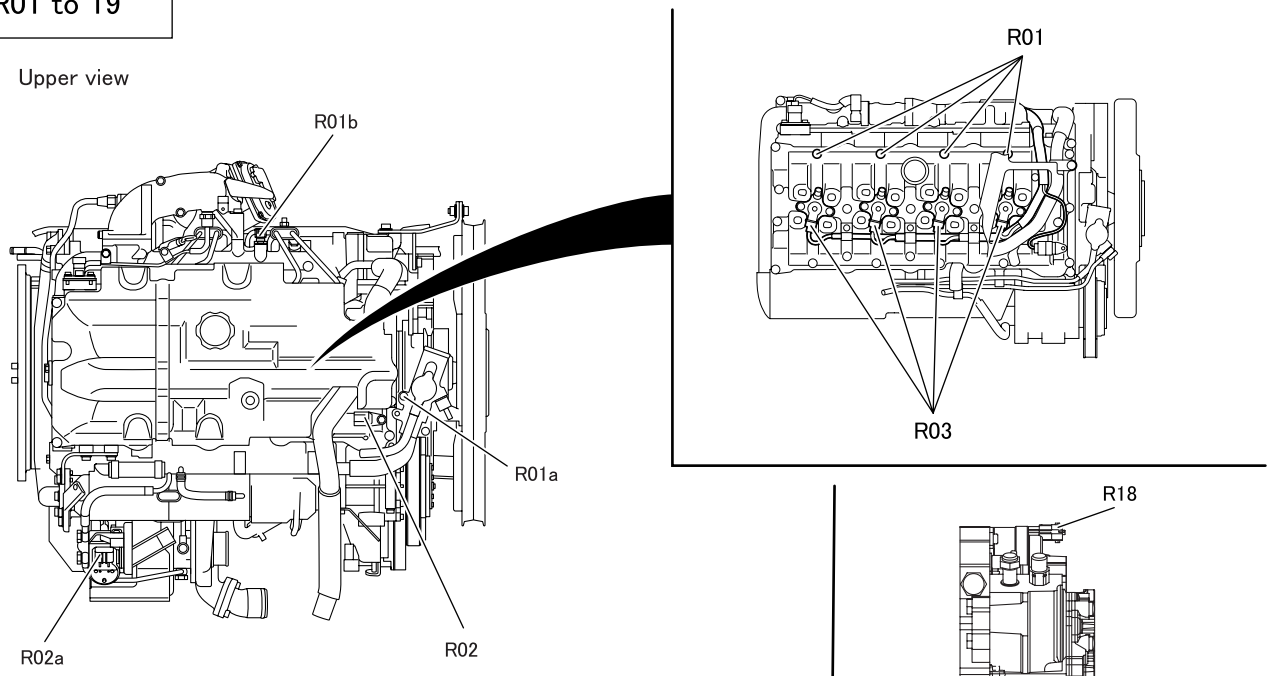

Right side view

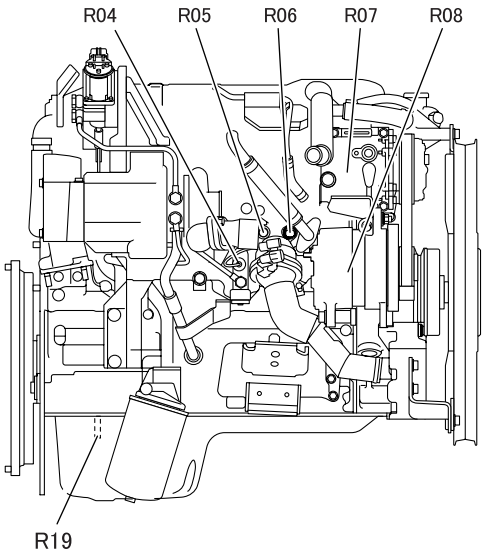

Left side view

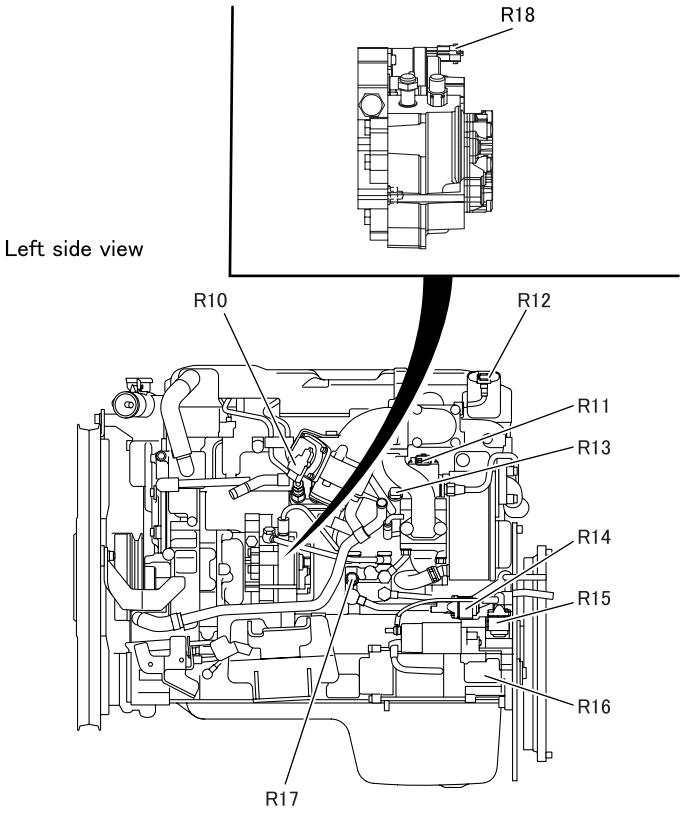

No relevant parts in a missing number

R01	Glow plug
R01a	Overheating switch
R01b	Boost air temperature sensor
R02	Cylinder recognition sensor
R02a	Turbocharger actuator
R03	Injector magnetic valve
R04	Engine oil pressure switch
R05	Water temperature sensor (Connects to water temperature gauge and engine ECU)
R06	Water temperature sensor (Connects to engine ECU)
R07	Magnetic clutch
R08	Alternator
R10	Throttle actuator (Building into motor, position sensor)
R11	EGR valve (Building into motor, position sensor)
R12	Boost pressure sensor
R13	Common rail pressure sensor
R14	Glow relay <Except FE83>
R15	Starter relay
R16	Starter
R17	Fuel temperature sensor
R18	MPROP (Rail pressure control valve)
R19	Engine oil level sensor

ECU : Electronic control unit
EGR : Exhaust gas recirculation

L02142

M E M O

S01 to 06 ＜Manual transmission＞

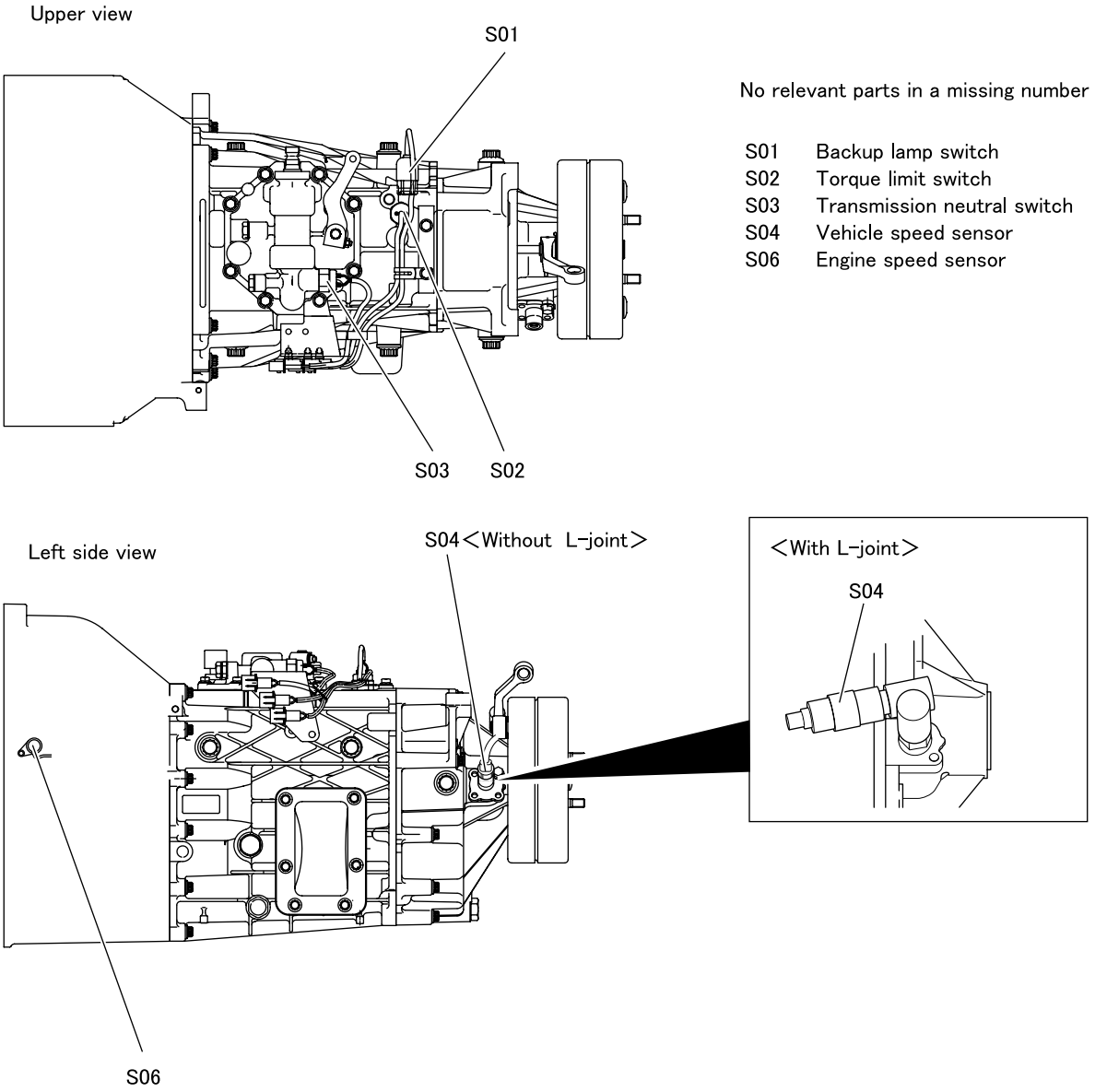

No relevant parts in a missing number

S01	Backup lamp switch
S02	Torque limit switch
S03	Transmission neutral switch
S04	Vehicle speed sensor
S06	Engine speed sensor

L02143

S04 to 10 ＜Automatic transmission＞

Left side view

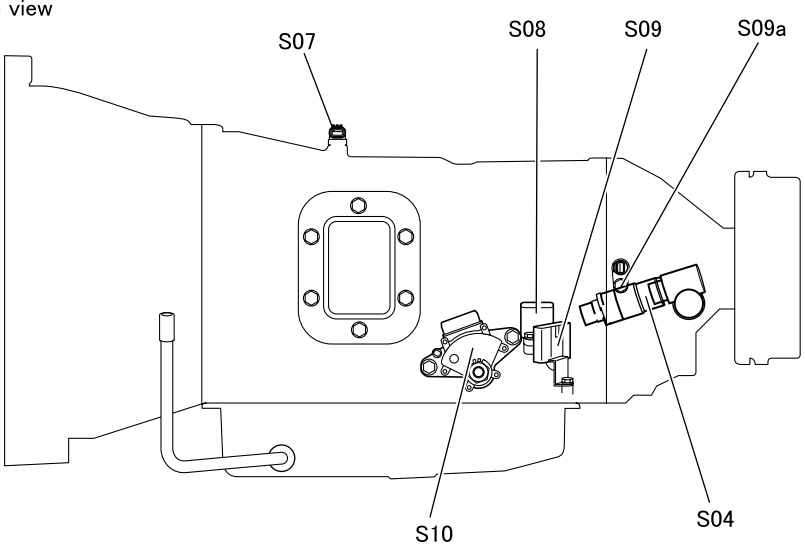

Right side view

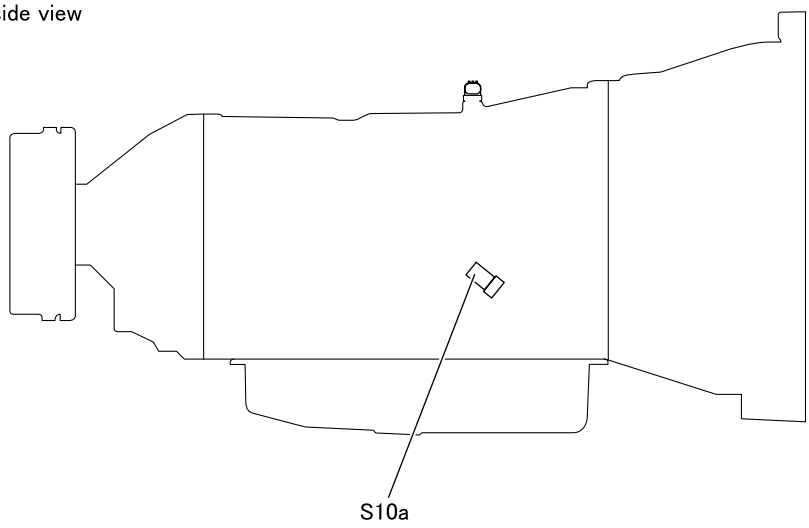

No relevant parts in a missing number

S04 Vehicle speed sensor
S07 Turbine revolution sensor
S08 A/T solenoid connector
S09 A/T solenoid connector
S09a Output speed sensor
S10 Inhibitor switch
S10a A/T fluid temperature sensor

A/T : Automatic transmission

S04 to 12 <Transfer (FG)>

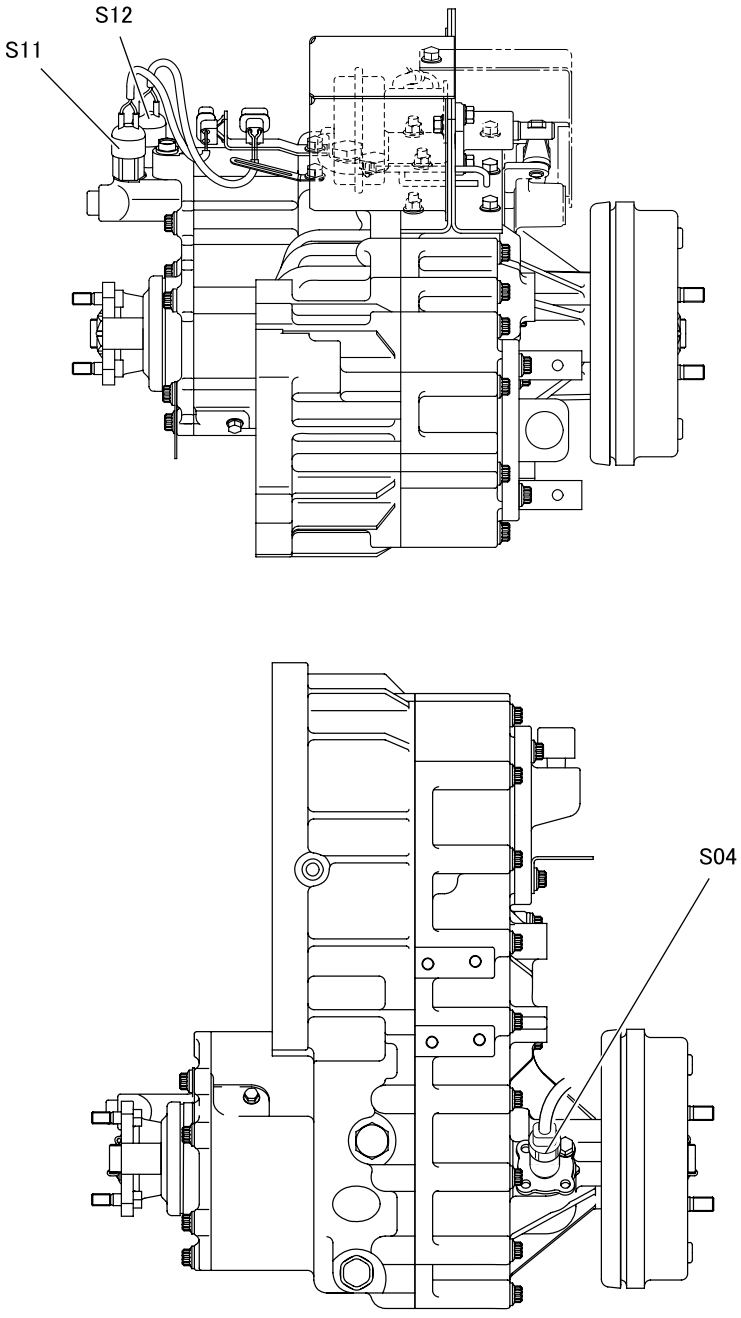

No relevant parts in a missing number

S04 Vehicle speed sensor
S11 Transfer low switch
S12 Transfer four-wheel drive switch

L00169

T01 to 17

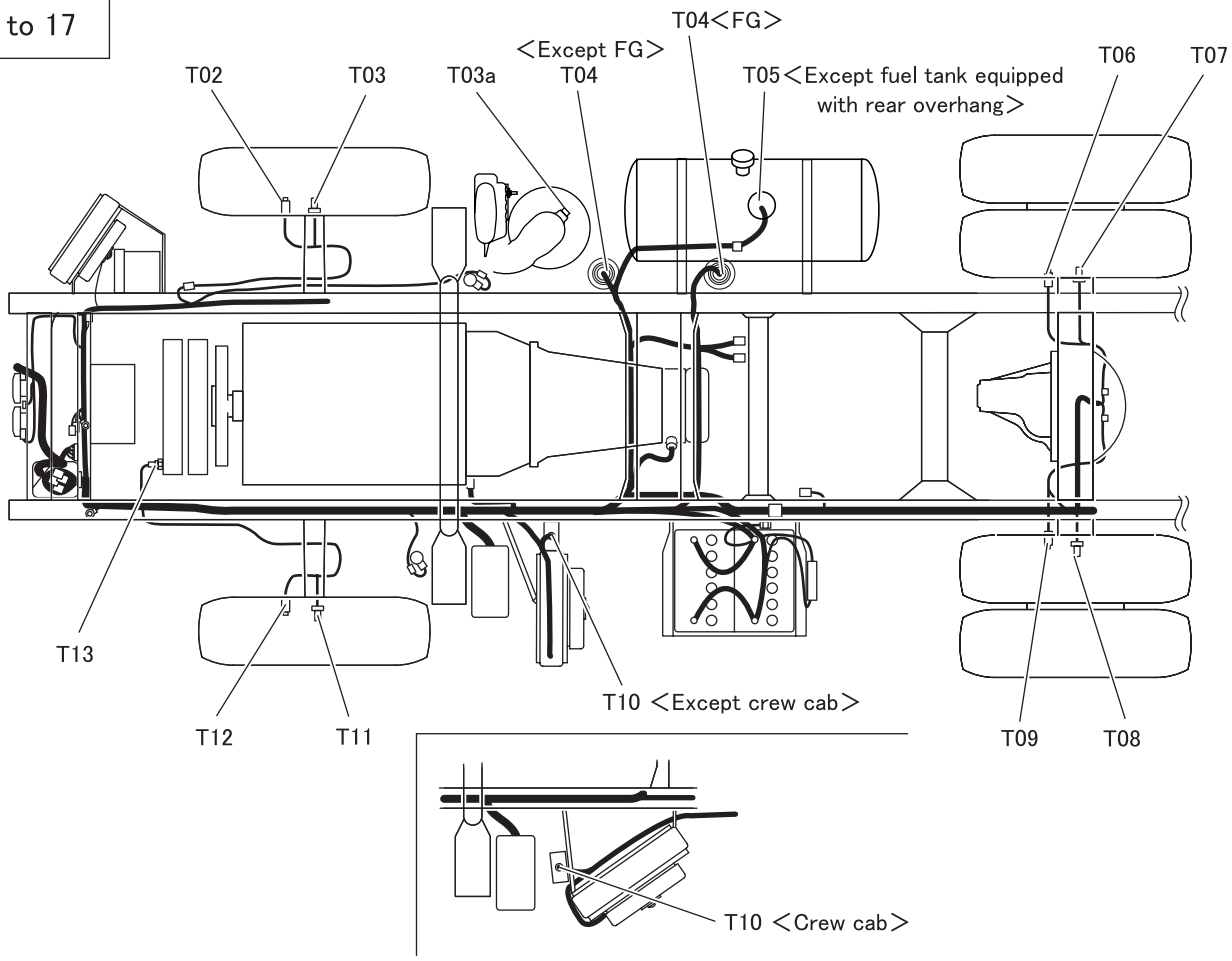

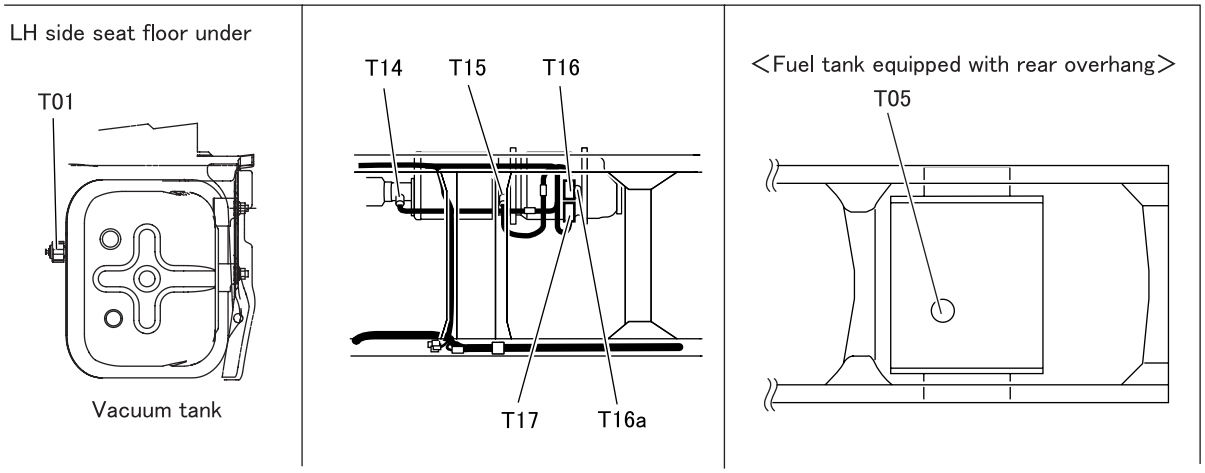

No relevant parts in a missing number

T01	Vacuum switch
T02	Front brake pad wear indicator, RH
T03	Front wheel speed sensor, RH
T03a	Air flow sensor
T04	Water separator sensor
T05	Fuel level sensor
T06	Rear brake pad wear indicator, RH
T07	Rear wheel speed sensor, RH
T08	Rear wheel speed sensor, LH
T09	Rear brake pad wear indicator, LH
T10	Automatic transmission fluid cooler fan thermo switch
T11	Front wheel speed sensor, LH
T12	Front brake pad wear indicator, LH
T13	Intake air temperature sensor
T14	Catalytic temperature sensor
T15	DPF temperature sensor 1
T16	DPF absolute pressure sensor
T16a	DPF temperature sensor 2
T17	DPF differential pressure sensor

DPF : Diesel particulate filter

L03433

U01 to 14

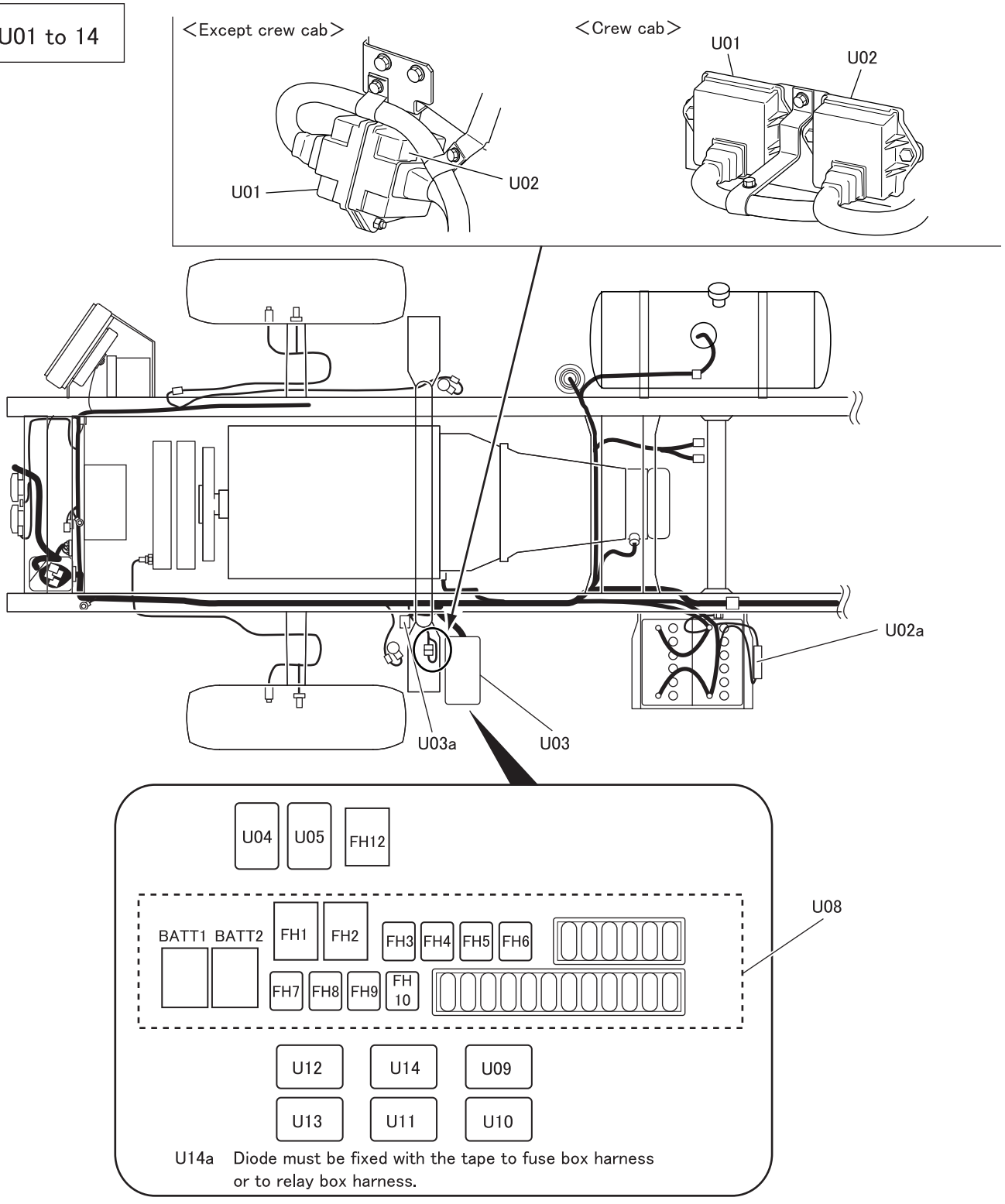

U14a Diode must be fixed with the tape to fuse box harness or to relay box harness.

No relevant parts in a missing number

U01	Throttle EDU
U02	EGR EDU
U02a	High-current fuse
U03	High-current fuse box
U03a	Glow ECU <FE83>
U04	ATF cooler fan motor relay
U05	Backup lamp relay <A/T>
U08	High-current fuse, fuse
U09	Horn relay
U10	Air-conditioner compressor relay
U11	Condenser fan relay
U12	Tail lamp relay
U13	EDU relay
U14	Van body dome light relay
U14a	Diode <In high-current fuse box>

ATF : Automatic transmission fluid
A/T : Automatic transmission
EDU : Electronic drive unit
EGR : Exhaust gas recirculation
ECU : Electronic control unit

L03347

U21 to 30

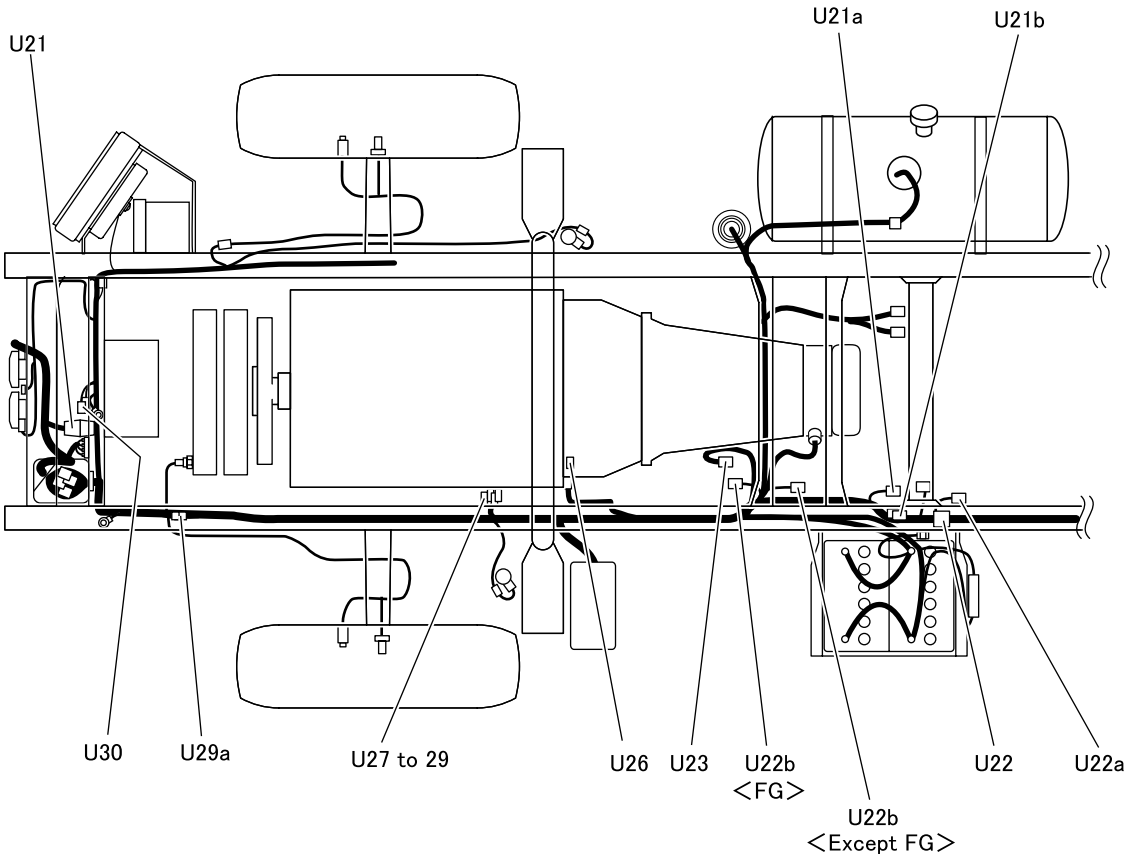

No relevant parts in a missing number

U21	Connection of cab harness and engine harness
U21a	Connection of chassis harness and transfer control harness <FG>
U21b	Diode <FG>
U22	Connection of chassis harness and rear chassis harness
U22a	Optional connector
U22b	Power take-off load sensor connector
U23	Transmission power take-off contorol switch connector
U26	Connection of chassis harness and starter harness
U27	Front van body dome light connector
U28	Front identification lamp connector
U29	Front clearance lamp connector
U29a	Connection of chassis harness and engine harness
U30	Diode

L03348

U31

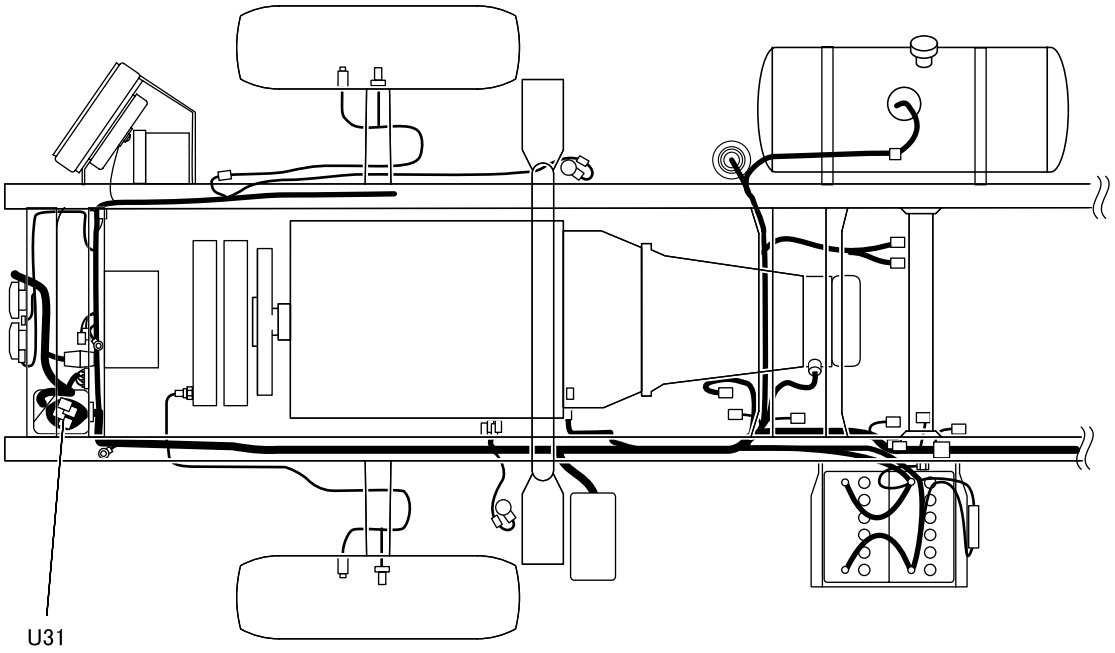

No relevant parts in a missing number

U31 Connection of chassis harness and cab harness <In connector box>

Connector		Main load	Remarks
Type	Color		
AB4A	Black	Four-wheel drive	
AB6A	Black	Automatic transmission	
AB12A	Black	Exhaust brake, air-conditioner, optional connector	
AB12A	Gray	Meter relation (vehicle speed sensor, engine oil pressure switch, alternator, engine oil level sensor, water temperature sensor,water separator sensor, fuel level sensor, front brake pad wear indicator), starter relay	
AB14A	Black	Hydraulic unit, glow ECU, glow relay	
AB14A	Gray	Engine ECU	
AB16A	Natural	Automatic transmission	Cab harness side connector : Male
AB16A	Natural	EDU	Cab harness side connector : Female
AC2A	Black	Battery power supply, blower power supply	
AD1A	Black	Hydraulic booster	
AD2A	Gray	Battery power supply	
DG10A	Gray	Engine ECU (DPF)	Cab harness side connector : Male
DG10A	Gray	Backup lamp switch, inhibitor switch, stop lamp, tail lamp, turn signal lamp, horn, van body dome light	Cab harness side connector : Female
GA12A	Black	Automatic transmission	

ABS : Anti-lock brake system
ECU : Electronic control unit
EDU : Electronic drive unit
DPF : Diesel particulate filter

L03349

V01 to 06

W01 to 07

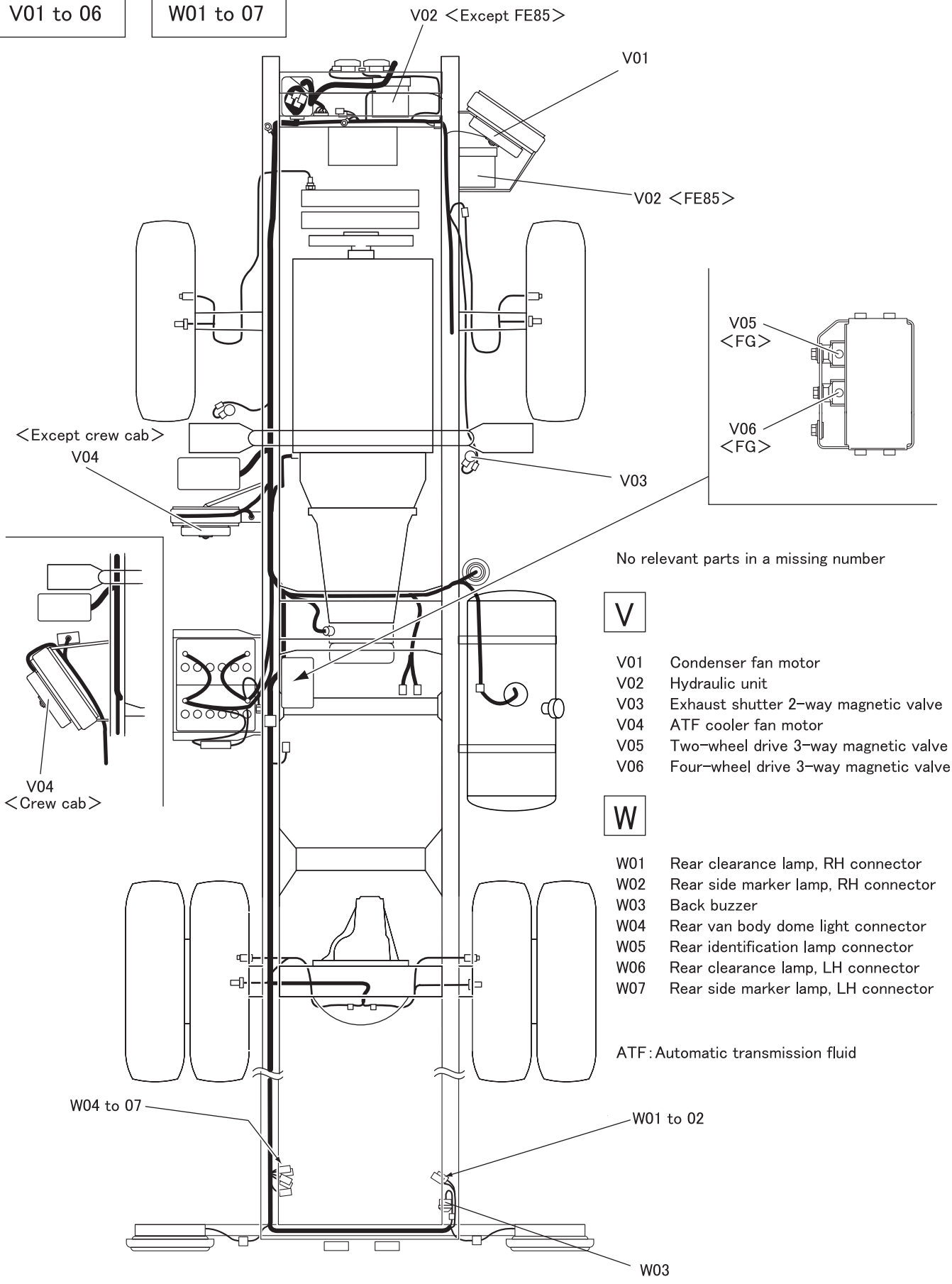

No relevant parts in a missing number

V

V01	Condenser fan motor
V02	Hydraulic unit
V03	Exhaust shutter 2-way magnetic valve
V04	ATF cooler fan motor
V05	Two-wheel drive 3-way magnetic valve
V06	Four-wheel drive 3-way magnetic valve

W

W01	Rear clearance lamp, RH connector
W02	Rear side marker lamp, RH connector
W03	Back buzzer
W04	Rear van body dome light connector
W05	Rear identification lamp connector
W06	Rear clearance lamp, LH connector
W07	Rear side marker lamp, LH connector

ATF : Automatic transmission fluid

L03434

54-11 INSPECTION OF ELECTRICAL EQUIPMENT

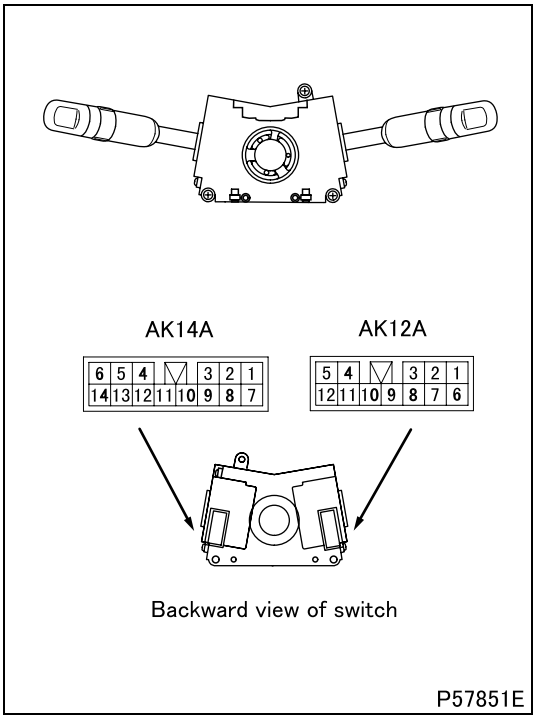

#001 Inspection of combination switch

AK12A connector connection table

Switch position		Continuity terminal
Lighting switch	OFF	–
	I	1–2
	II	1–2–3
Dimmer switch	Main	3–12
	Dimmer	3–9
	Passing	11–12
Turn signal lamp switch	LH	6–8
	N (neutral)	–
	RH	7–8

- Terminal 3 is for internal connection in the combination switch unit.

AK14A connector connection table

Switch position		Continuity terminal
Wiper and washer switch	OFF	–
	INT (interval)	5–7
	LO (low)	3–5
	HI (high)	3–4–5
	WASH (washer)	5–12
Horn switch	OFF	–
	ON	13-body ground
Exhaust brake switch	ON	8–9
	OFF	–

- If any fault is found, replace the switch. (See Gr37.)

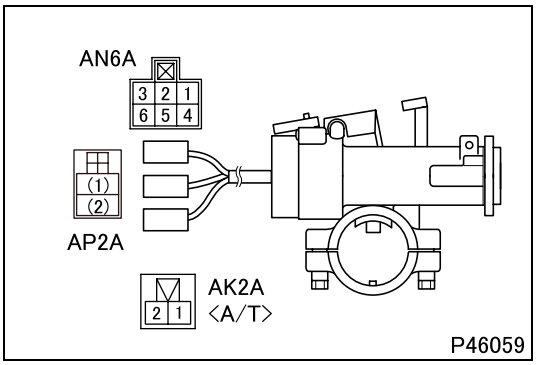

#002 Inspection of starter switch

AP2A, AN6A connector connection table

Switch position	Continuity terminal
LOCK	–
ACC	(2)–3, 5–6
ON	(1)–(2)–3–4, 5–6
START	(1)–(2)–2–3–4, 5–6

- Terminal numbers within parentheses ( ) show terminals of AP2A.

AK2A connector connection table

<Key interlock solenoid (A/T)>

Shift position	Continuity terminal	Remarks
P range: OFF	–	The key must be turned to the lock direction
Without P range: ON	(+) 1–2 (–)	The key must not be turned to the lock direction

A/T: Automatic transmission

- If any fault is found, replace the switch. (See Gr37.)

#011 Inspection of rheostat switch

- The rheostat switch contains a control circuit, because of this it is difficult to inspect the rheostat switch independently, therefore you should inspect the rheostat switch indirectly by inspecting the system harness and the related parts.
- If no fault is found in the related parts but the system is faulty, replace the switch.

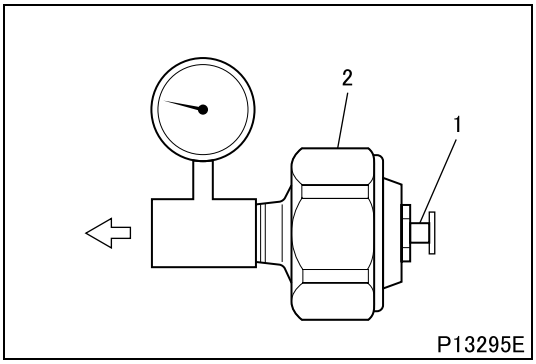

#023 Inspection of vacuum switch

- Perform the following checks, and if any fault is found, replace the switch. (See Gr35A.)

(1) Inspection without applying negative pressure

- Make sure that there is no continuity between terminals 1 and 2 (body).

(2) Inspection by applying negative pressure

- Gradually apply negative pressure to the switch starting from 0 kPa {0 psi, 0 kgf/cm^2}.
- Measure the degree of air pressure at the moment when continuity is detected between terminals 1 and 2 (body), and make sure to confirm if the value meets the standard.

Standard value	$-(47\ ^{+3.3}_{-4.0})$ kPa {$-(13.8\ ^{+0.98}_{-1.18})$ in.Hg, $-(350\ ^{+25}_{-30})$ mmHg}

#026, #027 Inspection of power window switch

- Because it is not easy to check these swtches individually, determine quality of the switches indirectly by checking related parts, such as harnesses, power window motor, etc. in the system.
- If there is nothing abnormal in related parts, but still something wrong with the system, then replace the switches. (See Gr43.)

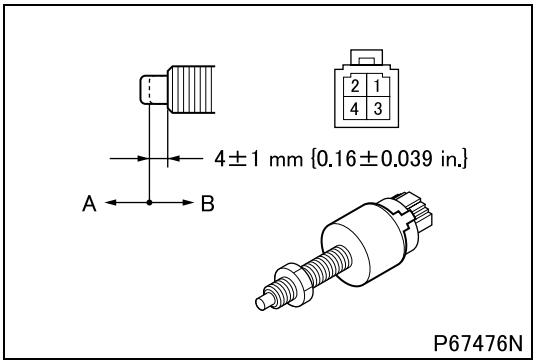

#031 Inspection of clutch switch

Switch position	Continuity terminal
A	1–4
B	2–3

- If any fault is found, replace the switch. (See Gr21.)

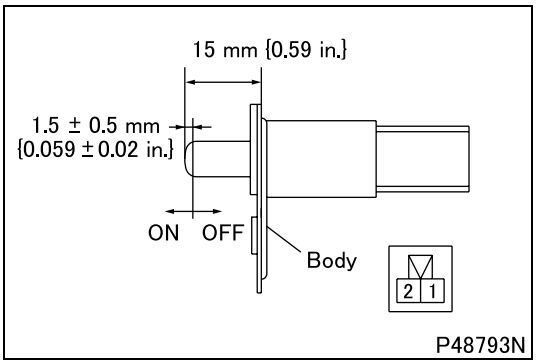

#035 Inspection of door switch

Switch position	Continuity terminal
OFF	–
ON	1-body, 2-body

- If any fault is found, replace the switch. (See Gr43.)

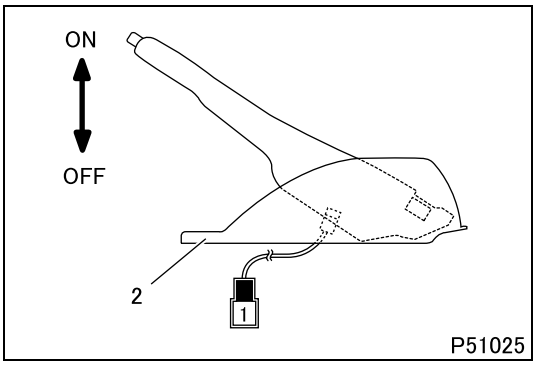

#038 Inspection of parking brake switch

- Measure continuity between terminals 1 and 2 (body) ground.

Pull the parking brake lever	Continuity exists
Release the parking brake lever	Continuity does not exist

- If any fault is found, replace the switch. (See Gr36.)

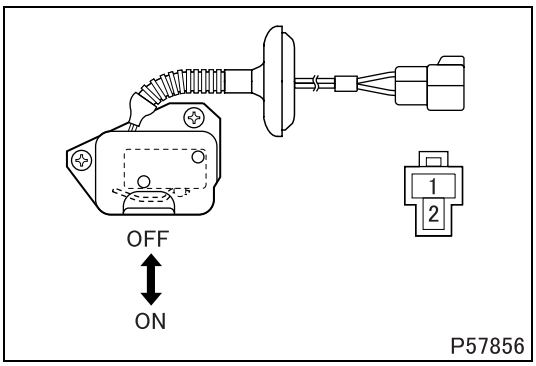

#039 Inspection of cab tilt lock switch

Switch position	Continuity terminal
OFF	–
ON	1–2

- If any fault is found, replace the switch. (See Gr42.)

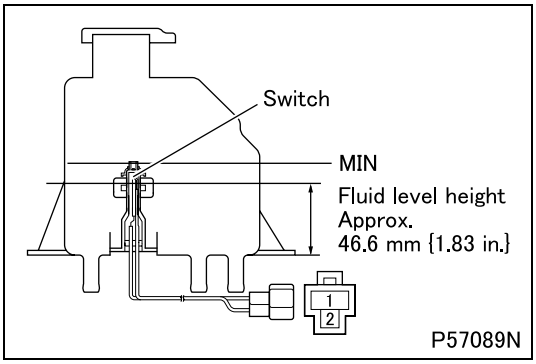

#041 Inspection of brake fluid level switch

- Gradually drain brake fluid from the brake fluid tank.

CAUTION ⚠

- **Brake fluid contains ingredients that dissolve paint on the bodywork of a vehicle. Quickly wipe off brake fluid when it is spilled.**

- Measure height of the switch when continuity is detected between terminals 1 and 2.

Standard value	46.6 mm {1.83 in.}

- If the measured value deviates from the standard value, replace the brake fluid tank. (See Gr52.)

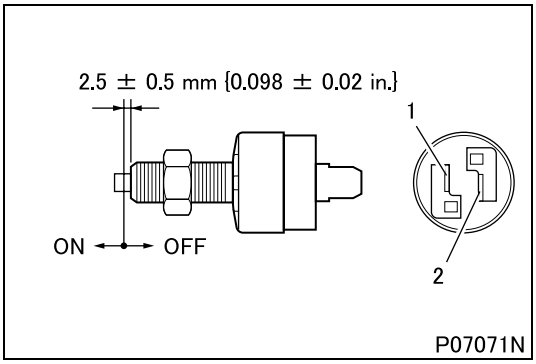

#042 Inspection of stop lamp switch

<Without auto cruise>

Switch position	Continuity terminal
OFF	–
ON	1–2

- If any fault is found, replace the switch. (See Gr35A.)

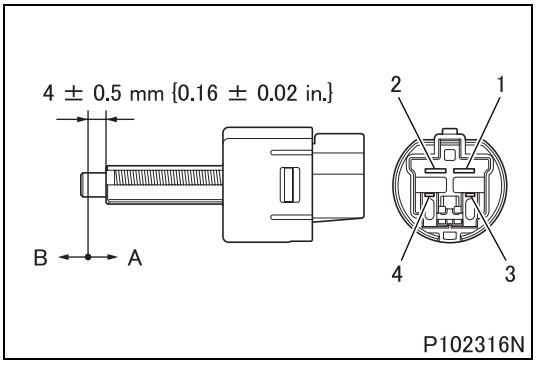

<With auto cruise>

Switch position	Continuity terminal
A	3–4
B	1–2

- If any fault is found, replace the switch. (See Gr35A.)

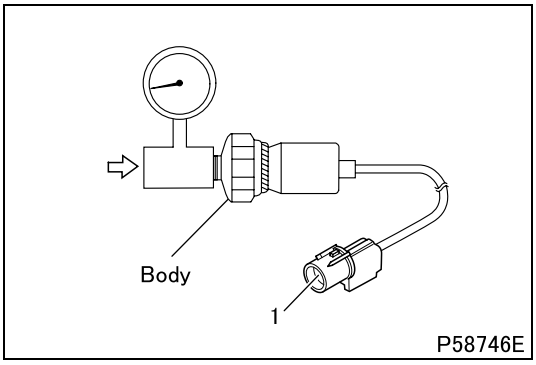

#044 Inspection of engine oil pressure switch

- Perform the following checks, and if any fault is found, replace the switch. (See Gr12.)

(1) Inspection without applying air pressure

- Make sure that there is continuity between terminals 1 and body.

(2) Inspection by applying air pressure

- Gradually apply air pressure to the switch starting from 0 kPa {0 psi, 0 kgf/cm^2}.
- Measure the degree of air pressure at the moment when continuity is not detected between terminals 1 and body, and make sure to confirm if the value meets the standard.

Standard value (operating pressure)	50 ± 10 kPa {7.1 ± 1.4 psi, 0.5 ± 0.1 kgf/cm^2}

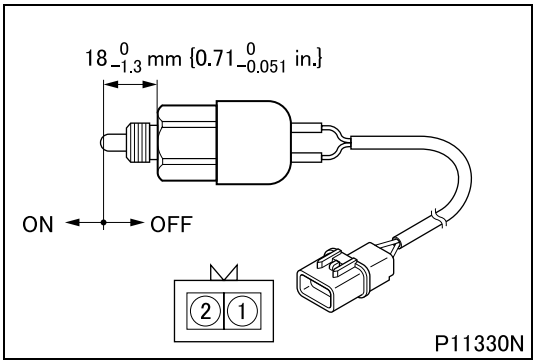

#054 Inspection of switch

- Backup lamp switch. (See Gr22.)
- Transfer four-wheel drive switch. <FG> (See Gr24.)
- Transfer low switch. <FG> (See Gr24.)

Switch position	Continuity terminal
OFF	–
ON	1–2

- If any fault is found, replace the switch.

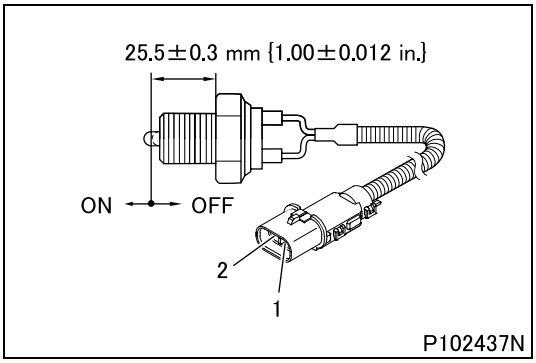

#056 Inspection of transmission neutral switch

Switch position	Continuity terminal
OFF	–
ON	1–2

- If any fault is found, replace the switch. (See Gr22.)

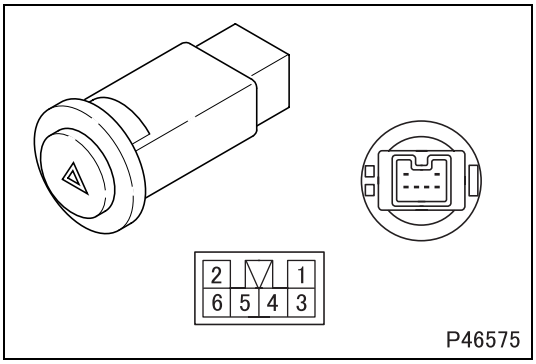

#081 Inspection of hazard switch

Switch position	Continuity terminal	Night illumination
OFF	–	(+) 2-1 (–)
ON	4–5–6	

- If any fault is found, replace the switch. (See Gr52.)

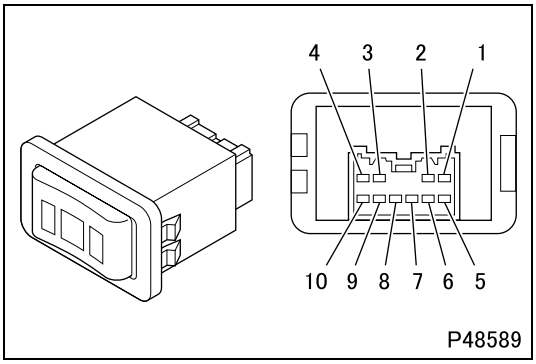

#087 Inspection of van body dome light switch

Switch position	Continuity terminal	Operation illumination	Night illumination
OFF	1–8	–	(+) 2-3 (–)
ON	1–7	(–) 3–9 (+)	

- If any fault is found, replace the switch.

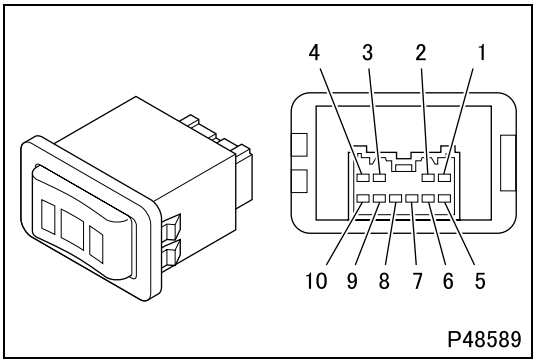

#089 Inspection of switch

- Front drive switch
- Warm-up switch

Switch position	Continuity terminal	Night illumination
OFF	1–8	(+) 2-3 (–)
ON	1–7	

- If any fault is found, replace the switch. (See Gr52.)

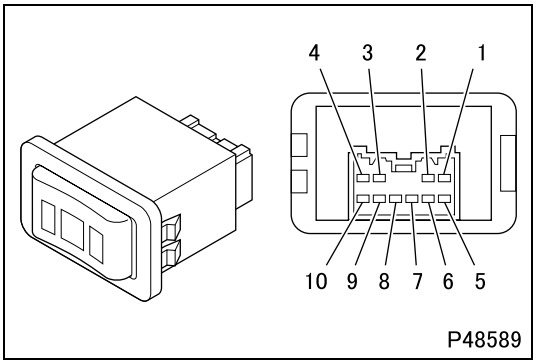

#092 Inspection of engine oil level check switch

Switch position	Continuity terminal
–	–
CHK	1–7, 5–6

- If any fault is found, replace the switch. (See Gr52.)

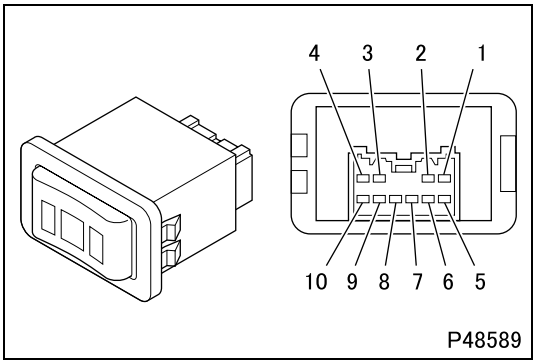

#094 Inspection of door lock switch

Switch position	Continuity terminal	Night illumination
LOCK	1–7	(+) 2–3 (–)
Neutral	–	
UNLK	1–8	

- If any fault is found, replace the switch. (See Gr43.)

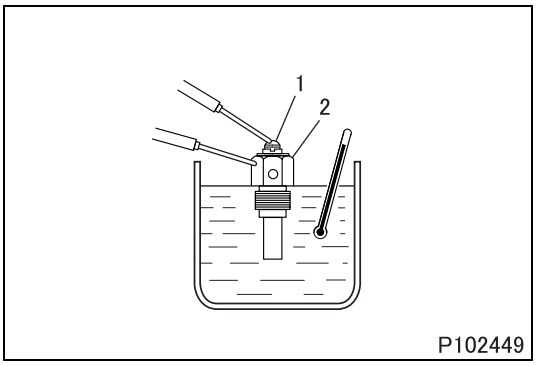

#160 Inspection of overheating switch

- Dip the switch in a container filled with engine oil.
- Raise the oil temperature to the specified values and stir the oil.
- Measure the operating temperature between terminals 1 and 2 (body) respectively.

Standard Value	When temperature increase (OFF→ON)	115 ± 2°C {239 ± 3.6°F}
	When temperature decrease (ON→OFF)	115 ± 4°C {239 ± 7.2°F}

- If the measured value deviates from the standard value, replace the switch. (See Gr14.)

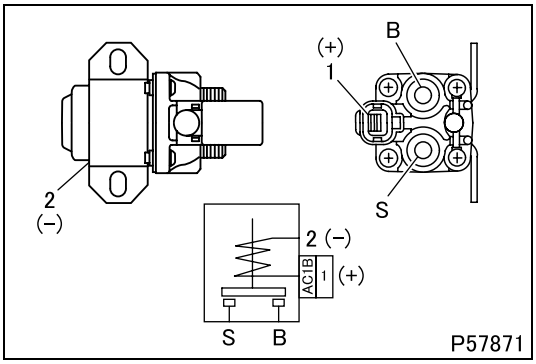

#187 Inspection of starter relay

- Perform continuity check and operation check, and if any fault is found, replace the relay.

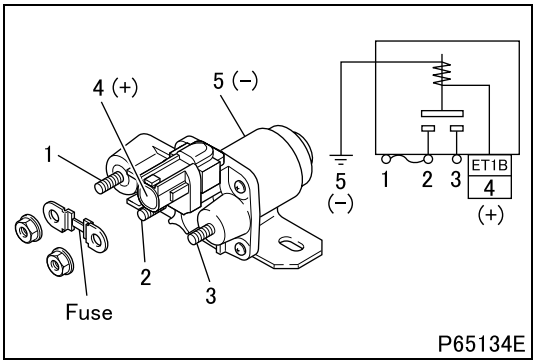

#195 Inspection of glow relay

- Perform continuity check and operation check, and if any fault is found, replace the relay.

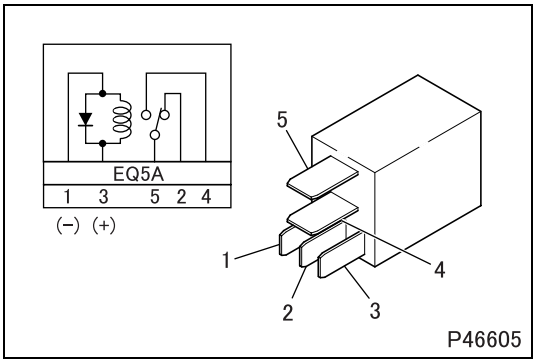

#201 Inspection of relay (normally open type 5 pin)

- Perform continuity check and operation check, and if any fault is found, replace the relay.

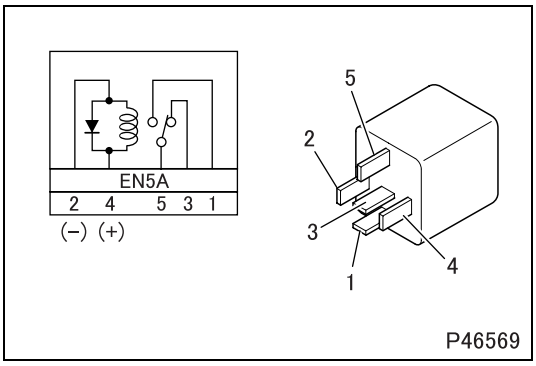

#202 Inspection of relay (normally open type 5 pin)

- Perform continuity check and operation check, and if any fault is found, replace the relay.

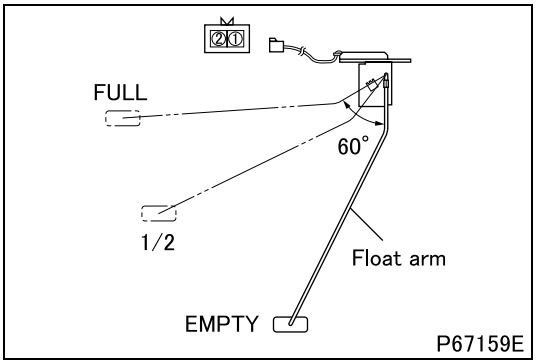

#258 Inspection of fuel level sensor

- Measure resistance values between terminals 1 and 2 when bringing the float arm into contact with stoppers (at EMPTY and FULL positions) and placing it at the midpoint position.

Standard value	at FULL position	0^{+2}_{0} Ω
	at 1/2 position	50 ± 3 Ω
	at EMPTY position	150 ± 10 Ω

- If the measured value deviates from the standard value, replace the sensor. (See Gr13A.)

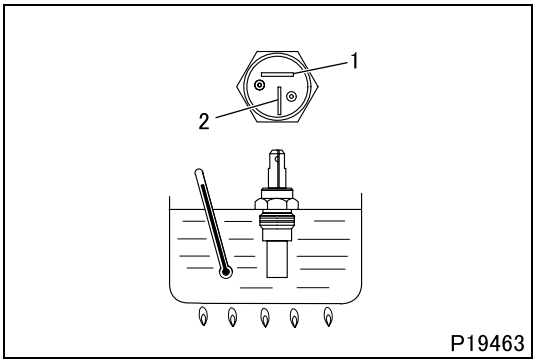

#262 Inspection of water temperature sensor

<For water temperature gauge>

- Dip the sensor in a container filled with engine oil.
- Raise the oil temperature to the specified one while stirring oil.
- Measure resistance values between terminals 1 and 2 and body.
  Terminal 1: water temperature gauge connected side
  Terminal 2: engine ECU connected side

Standard value	1 and body (water temperature gauge connected side)	50°C {122°F}	153.9 Ω (reference value)
		80°C {176°F}	$51.9^{+4.9}_{-4.4}$ Ω
		100°C {212°F}	$27.4^{+1.9}_{-1.2}$ Ω
	2 and body (engine ECU connected side)	–20°C {–68°F}	24.8 ± 2.5 kΩ
		0°C {0°F}	8.62 kΩ (reference value)
		20°C {68°F}	3.25 ± 0.33 kΩ
		60°C {140°F}	620 Ω (reference value)
		80°C {176°F}	300 Ω (reference value)

- If the measured value deviates from the standard value, replace the sensor. (See Gr14.)
  ECU: electronic control unit

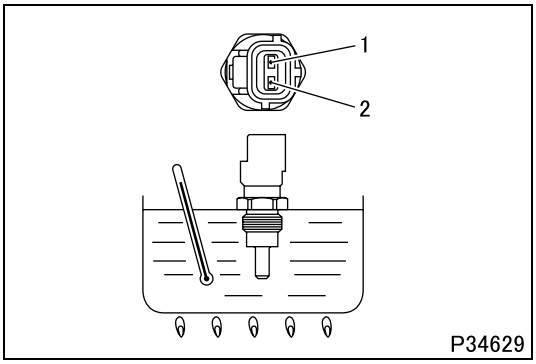

<For engine control>

- Place the sensor in engine oil in a container.
- Raise the oil temperature to the specified values and stir the oil.
- Measure the resistance between terminals 1 and 2.

Standard value	20°C {68°F}	2.45 ± 0.14 kΩ
	80°C {176°F}	0.32 kΩ (reference value)
	110°C {230°F}	147.1 ± 2 Ω

- If the measured value deviates from the standard value, replace the sensor. (See Gr14.)

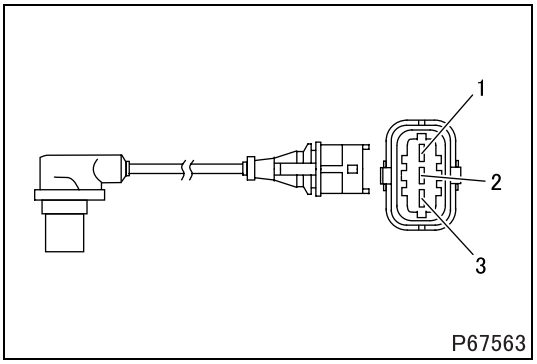

#263 Inspection of engine speed sensor

- Measure the resistance between terminals 1 and 2.

Standard value (at 20°C {68°F})	860 ± 86 Ω

- If the measured value deviates from the standard value, replace the sensor. (See Gr13E.)

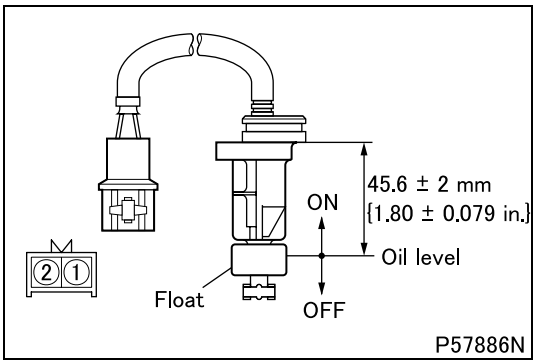

#264 Inspection of engine oil level sensor

Switch position	Continuity terminal
OFF	–
ON	1–2

- If any fault is found, replace the sensor. (See Gr12.)

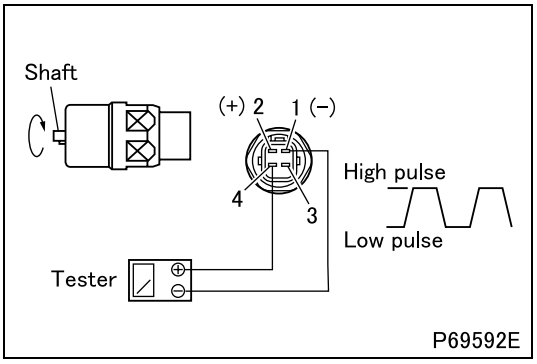

#265 Inspection of vehicle speed sensor

- With the 12 volts DC applied to terminals 1 and 2, slowly turn the shaft of the vehicle speed sensor.
- Measure the maximum value (high pulse voltage) and the minimum value (low pulse voltage) of the voltage generated at each terminal.

Standard value	Between 25 pulse output terminals 1 and 4	Low pulse voltage	0.5 V or less
		High pulse voltage	8 ± 1 V

- If the measurement is not within the range of the standard value, replace the sensor. (See Gr22.)

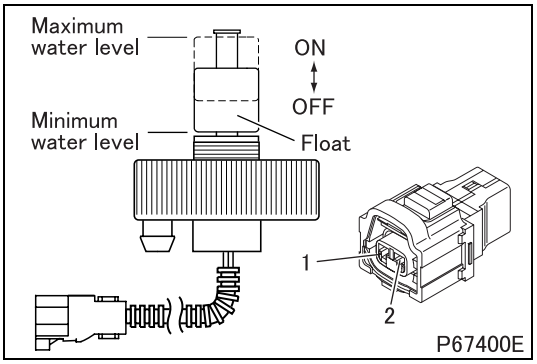

#274 Inspection of water separator sensor

Condition	Continuity terminal
ON (when coolant quantity is approx. 100 cm^3 {6.10 cu.in.})	1–2
OFF	–

- If any fault is found, replace the sensor (See Gr13A.)

#350 Inspection of control unit and other units

- Since the units alone cannot be readily checked in the off-vehicle state, check the harness, switch and other related parts in each system.
- If any fault is not found in the related parts, and the problem still remains in the system, replace the control units or other units.

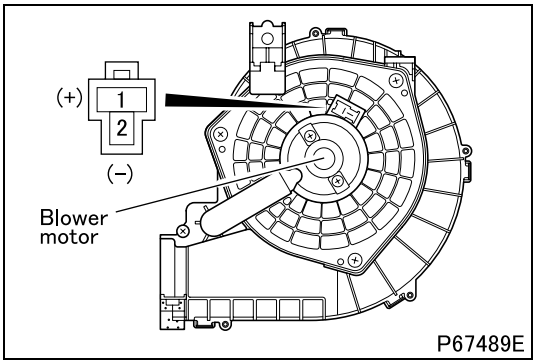

#411 Inspection of blower motor

- Make sure that the motor operates when battery voltage is applied between terminals 1 and 2.
- If any fault is found, replace the motor. (See Gr55.)

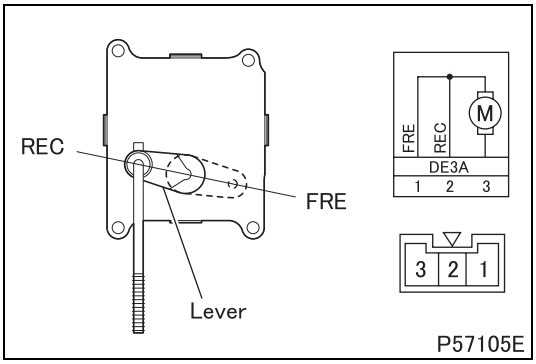

#415 Inspection of fresh/recirculation changeover motor

- Perform the following checks, and if any fault is found, replace the motor. (See Gr55.)
- Make sure that the motor operates when battery voltage is applied between each terminal.

Lever position	Terminal
REC (inside air)	(+) 3–2 (–)
FRE (outside air)	(+) 3–1 (–)

CAUTION ⚠

- **Stop applying battery voltage if the lever stops spontaneously at the REC or FRE position.**

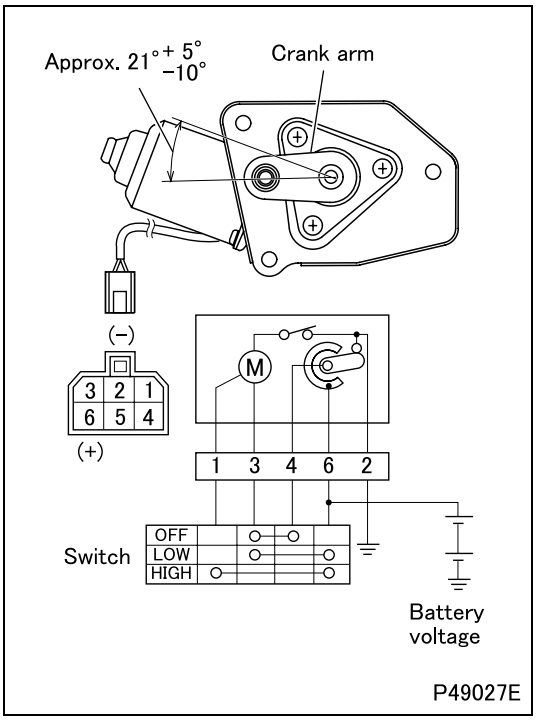

#422 Inspection of wiper motor

- Connect a switch to wiper motor as shown.
- Check the motor for correct operation as follows. If any fault is found, replace the motor. (See Gr51.)

(1) Inspection of motor operation

- Set switch to HIGH position to check that the motor rotates at high speed.
- Set switch to LOW position to check that the motor rotates at low speed.

(2) Inspection of automatic stop position

- Set switch to LOW position to let the motor rotate at low speed.
- When the crank arm is in a position other than automatic stop position (outside the angles shown), set switch to OFF position.
- Check to see that the crank arm stops at the automatic stop position (within the angles range shown).

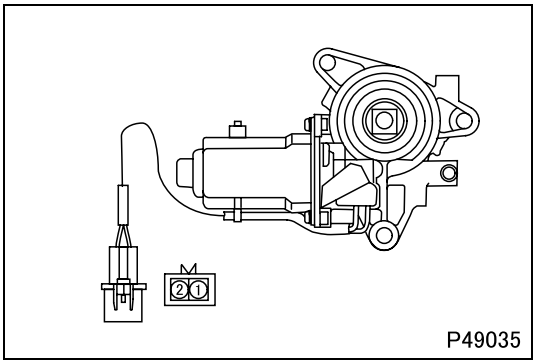

#423 Inspection of power window motor

- Make sure that the motor operates when battery voltage is applied between terminals 1 and 2.

Rotation direction	Terminal
Left	(+) 2–1 (–)
Right	(+) 1–2 (–)

- If any fault is found, replace the motor and the regulator as a set. (See Gr43.)

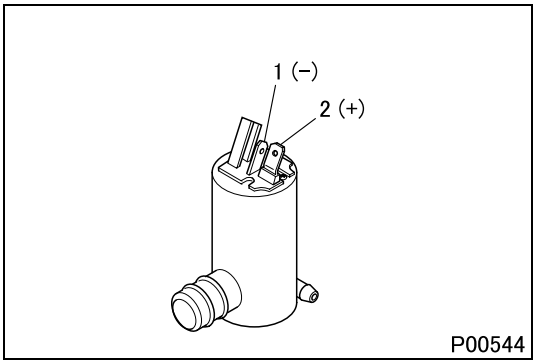

#428 Inspection of windshield washer motor

- Make sure that the motor operates when battery voltage is applied between terminals 1 and 2.
- If any fault is found, replace the motor. (See Gr51.)

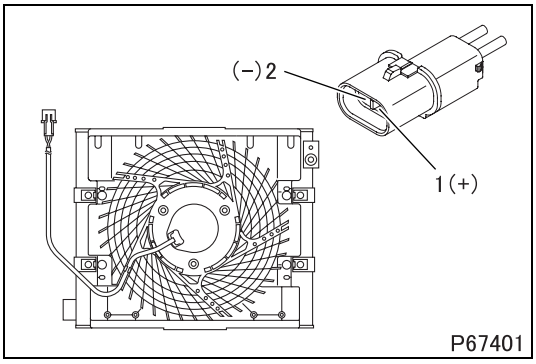

#431 Inspection of condenser fan motor

- Make sure that the motor operates when battery voltage is applied between terminals 1 and 2.
- If any fault is found, replace the motor. (See Gr55.)

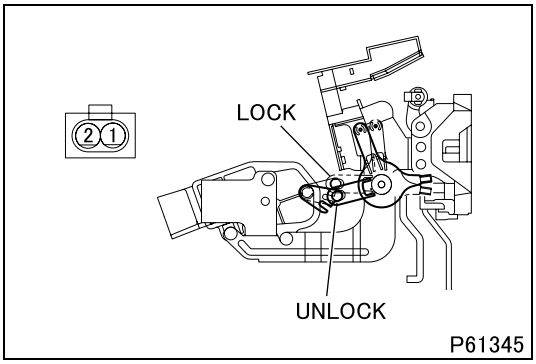

#510 Inspection of door lock actuator (on assistant driver's side)

- Apply battery voltage between each terminals confirm that the actuator operates.

Switch position	Terminal
LOCK	(+) 1–2 (–)
UNLOCK	(+) 2–1 (–)

- If any fault is found, replace the actuator. (See Gr43.)

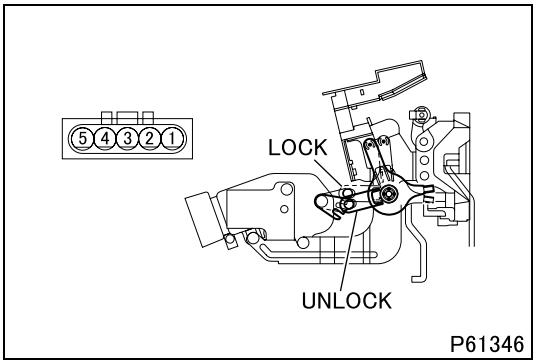

#511 Inspection of door lock actuator (on driver's side)

- Apply battery voltage between each terminals confirm that the actuator operates.

Switch position	Continuity terminal	Terminal
LOCK	1–2	(+) 3–4 (–)
UNLOCK	1–5	(+) 4–3 (–)

- If any fault is found, replace the actuator. (See Gr43.)

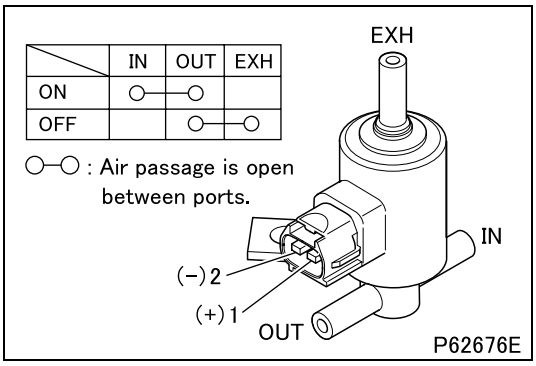

#565 Inspection of magnetic valve

<Type-1>

- Perform the following checks, and if any fault is found, replace the 2-way magnetic valve.

(1) Operation check

- Gradually apply DC current between terminals 1 and 2 starting from 0 V.

Measure the voltage at which the 2-way magnetic valve operates. (Determine ON/OFF of the magnetic valve by operating noises.)

Standard value (minimum operating voltage)	11 V or less

(2) Inspection of continuity and air tightness

Negative pressure when inspected: –100 kPa {–29.5 in.Hg, –750 mmHg}

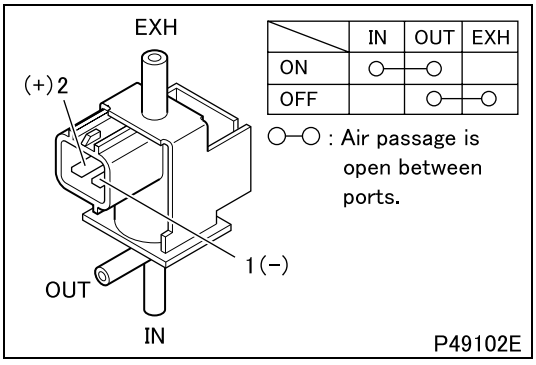

<Type-2>

- Perform the following checks, and if any fault is found, replace the 3-way magnetic valve.

(1) Operation check

- Gradually apply DC current between terminals 1 and 2 starting from 0 V.

Measure the voltage at which the 3-way magnetic valve operates. (Determine ON/OFF of the magnetic valve by operating noises.)

Standard value (minimum operating voltage)	8 V or less

(2) Inspection of continuity and air tightness

- Negative pressure when inspected: –60 kPa {–17.7 in.Hg, –450 mmHg}

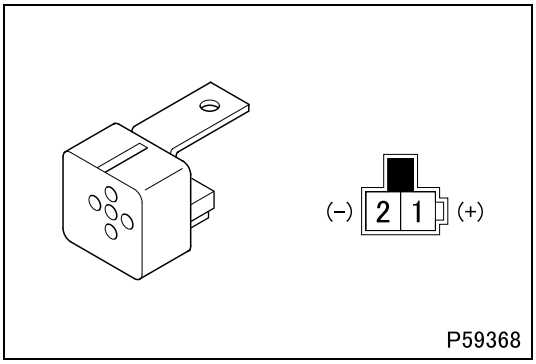

#611 Inspection of warning buzzer

- Make sure that the buzzer sounds when battery voltage is applied between terminals 1 and 2.
- If any fault is found, replace the buzzer.

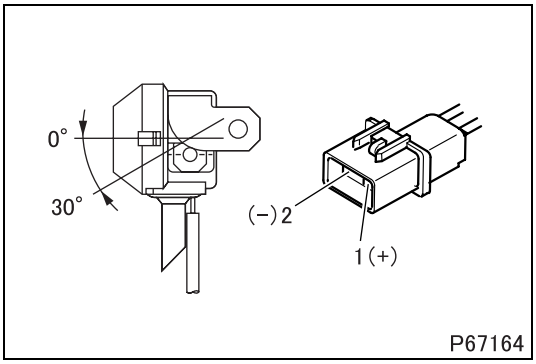

#614 Inspection of back buzzer

[Inspection]

- Make sure to confirm if the buzzer intermittently sounds by applying the battery voltage between terminals 1 and 2.
- If any fault is found, replace the buzzer.

[Installation]

- Install the back buzzer to the frame in the range of angles as illustrated.

CAUTION ⚠

- **Beware that if the installed angle of the buzzer is out of the range as illustrated, water in the buzzer will not be drained normally.**

#615 Inspection of electric horn

CAUTION ⚠

- **Bending the stay changes the sound quality of the horn, degrading the horn performance.**
- **Never bend or damage the stay.**

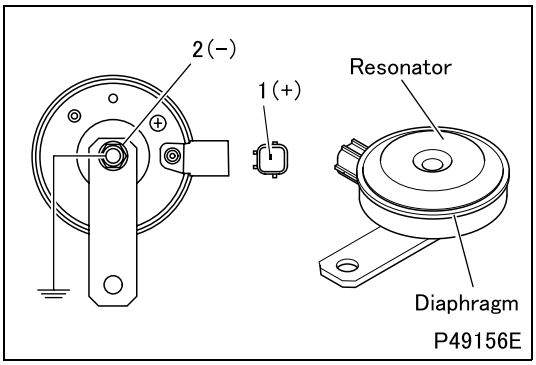

[Inspection]

- Make sure to confirm whether the horn sounds by applying the battery voltage between terminals 1 and 2 (body).
- Remove foreign substances adhered to the resonator and diaphragm.
- If any fault is found, replace the horn.

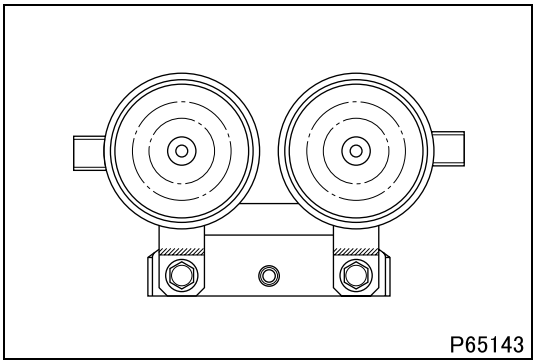

[Installation]

- Install in the direction as illustrated.

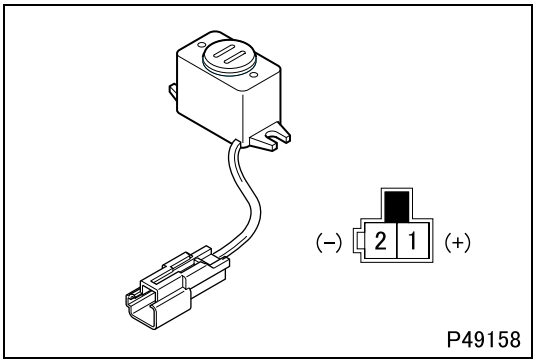

#618 Inspection of cab tilt buzzer

- Make sure that the buzzer sounds when battery voltage is applied between terminals 1 and 2.
- If any fault is found, replace the buzzer.

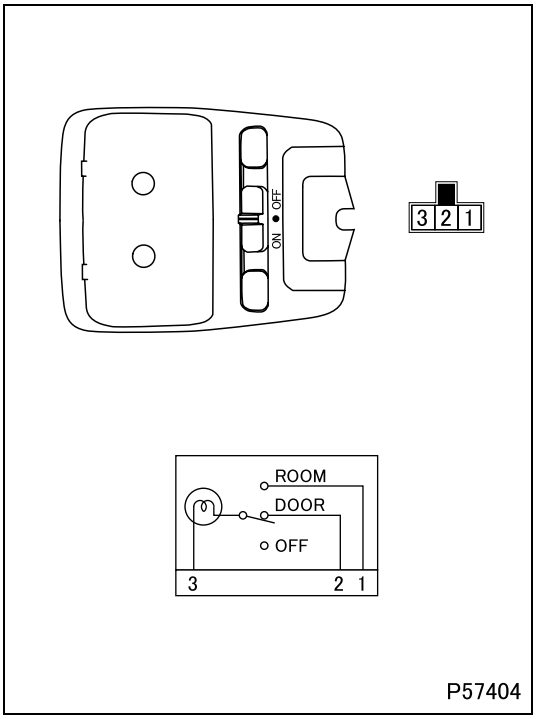

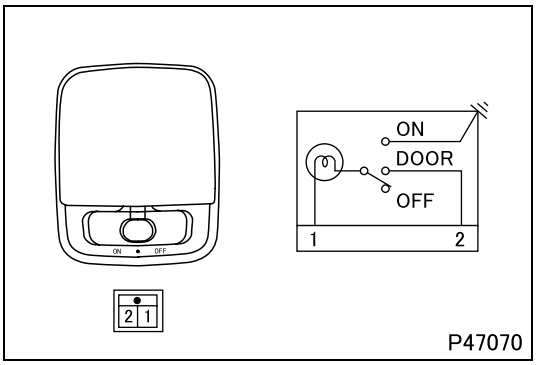

#656 Inspection of cab lamp

- If any fault is found, replace the lamp.

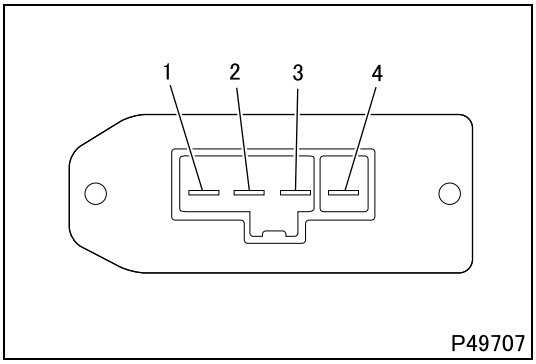

#750 Inspection of blower resistor

- Measure resistance values between each terminals.

Position	Terminal	Standard value
MEDIUM HIGH	1–4	0.24 Ω
MEDIUM LOW	3–4	0.93 Ω
LOW	2–4	1.5 Ω

- If the measured value deviates from the standard value, replace the blower resistor. (See Gr55.)

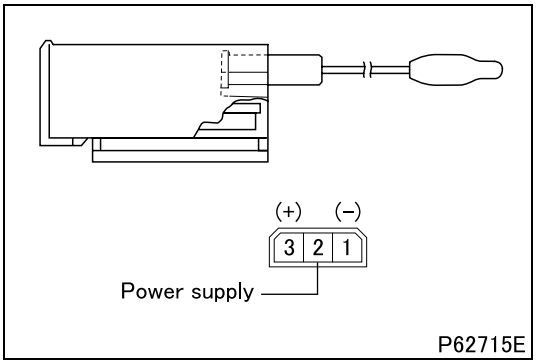

#751 Inspection of thermostat

- Measure resistance values between each terminals 1 and 3 at the specified temperature.

Switch position	Continuity terminal
OFF (4.2°C)	–
ON (5.2°C)	1–3

- If any fault is found, replace the thermostat. (See Gr55.)

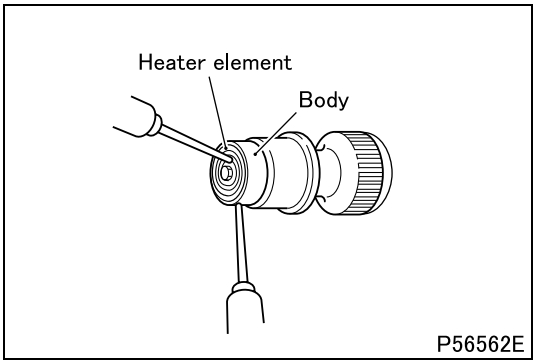

#754 Inspection of cigarette lighter

- Perform the following checks, and if any fault is found, replace the cigarette lighter. (See Gr52.)
- Make sure that there is continuity between heater element and body.

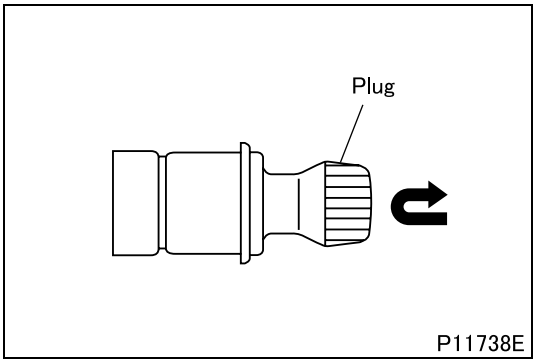

- Make sure that when plug is pushed in by hand, it immediately returns to its original position.
- Place the starter switch at ACC or ON position.
- Push plug into the socket in the cab.
- Measure the time required for plug to automatically return.

Standard value	15 ± 5 seconds

- Check to see that heater element is red-hot.

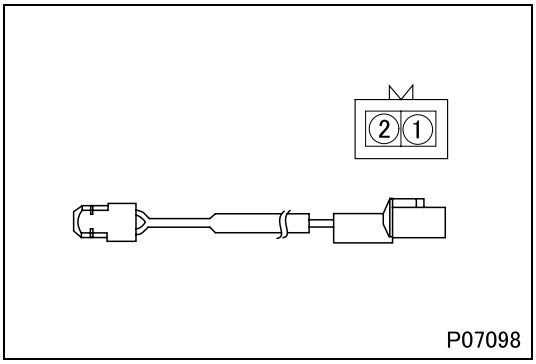

#759 Inspection of brake pad wear indicator

- Make sure that there is continuity between terminals 1 and 2.
- If any fault is found, replace the brake pad wear indicator. (See Gr35A.)

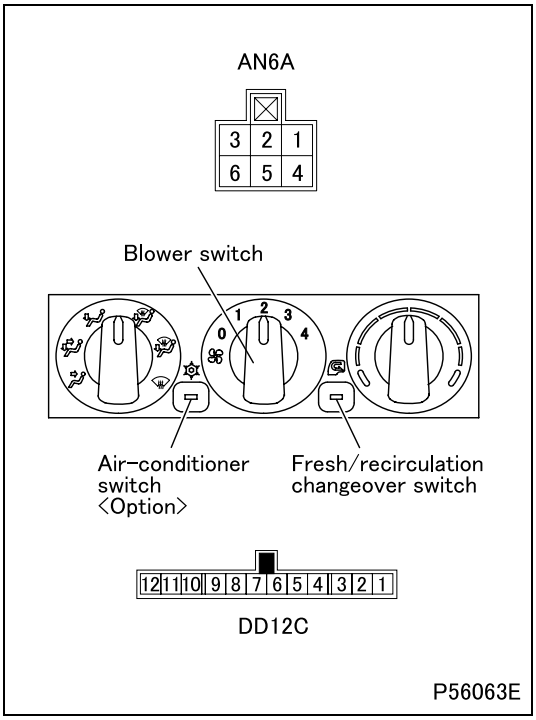

#763 Inspection of heater control panel

- Perform the following checks, and if any fault is found, replace the heater control panel. (See Gr52.)

(1) Blower switch <AN6A connector>

Switch position	Continuity terminal
0 : OFF	–
1 : LO (LOW)	4–5–6
2 : ML (MEDIUM LOW)	1–5–6
3 : MH (MEDIUM HIGH)	2–5–6
4 : HI (HIGH)	3–5–6

(2) Fresh/recirculation changeover switch <DD12C connector>

Switch position	Continuity terminal	Operation illumination	Night illumination
OFF : Fresh air	9–10	–	(+) 7–8 (–)
ON : Recirculation air	10–11	(+) 12–10 (–)	

(3) Air-conditioner switch <DD12C connector>

Switch position	Continuity terminal	Operation illumination	Night illumination
OFF	–	–	(+) 7–8 (–)
ON	3–4–6	(+) 3–6 (–) (+) 4–6 (–)	

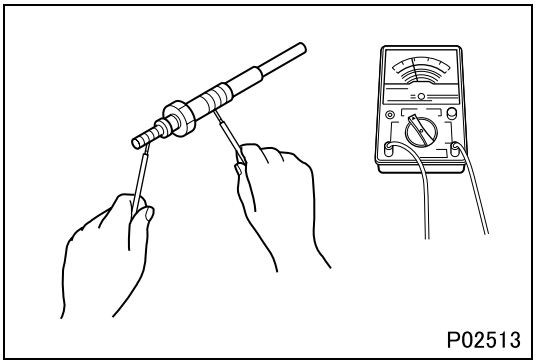

#764 Inspection of glow plug

- Measure resistance value of glow plug as shown.

Standard value (cold resistance of glow plug)	Approx. 1.0 Ω

- If the measured value deviates from the standard value, replace the glow plug. (See Gr11.)

DANGER ⚠

- **Since flammable hydrogen gas is generated by the battery be sure to obey the following warnings:**
  - **Do not short-circuit the (+) and (–) terminals on the battery.**
  - **Keep sparks and lit cigarettes away from the battery.**
  - **Do not wear metal objects on your arms and lean over battery.**
- **Because the battery electrolyte is made of diluted sulfuric acid and is corrosive, when handling battery wear safety glasses and rubber gloves to protect the eyes and hands.**

WARNING ⚠

- **Make sure that you disconnect battery cable (–) first when you disconnect battery cables.**

CAUTION ⚠

- **Make sure that all electrical switches of the vehicle are OFF before connecting battery cables.**
- **Make sure that you connect battery cable (+) before you connect battery cable (–).**
- **To prevent a short-circuit be sure that disconnected battery cables do not accidentally touch the battery terminals.**

Service standards

Location	Maintenance item	Standard value	Limit	Remedy
–	Specific gravity of battery electrolyte (20°C {68°F})	1.280	1.220	Charge or replace

◆Service procedure◆

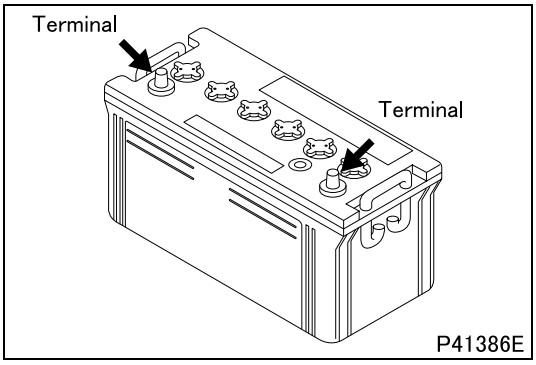

Inspection of battery

(1) Visual inspection

- If terminal is corroded, scrub off the corrosion from it using a wire brush.
- If cracks or defects are found on battery, replace it since the cracks or defects can cause liquid spills.

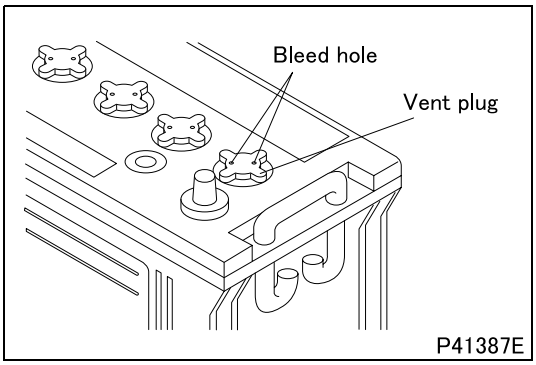

- If bleed hole of vent plug is clogged, clean the hole.

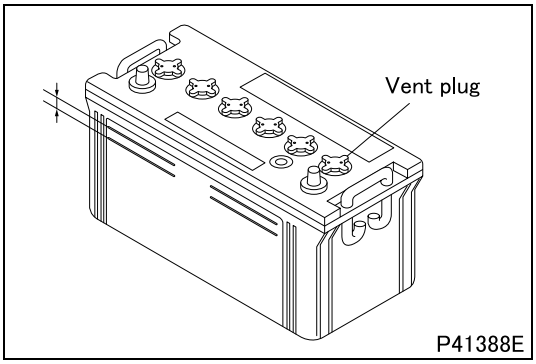

(2) Inspection of fluid level

- Make sure that the battery electrolyte level is between UPPER and LOWER.
- If the level is below LOWER, remove vent plug and fill the battery with distilled water or battery replenisher to UPPER.

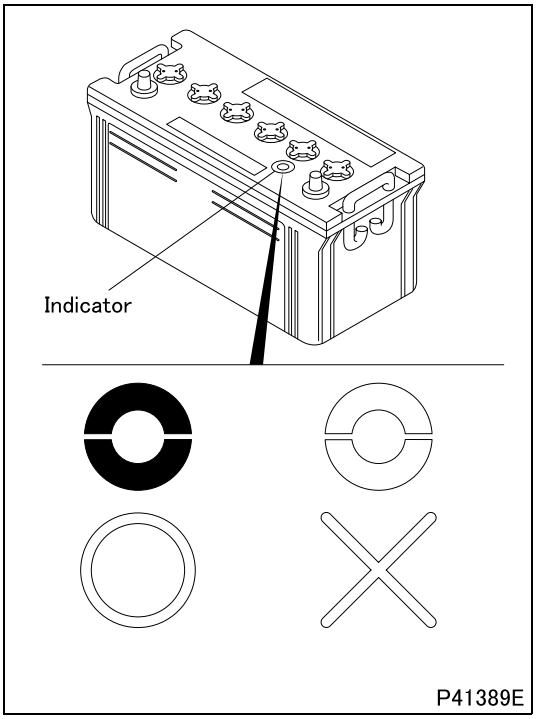

(3) Measurement of specific gravity

You can tell the specific gravity of the battery electrolyte by the color shown in indicator.

Blue : Good
White : Charge or replace

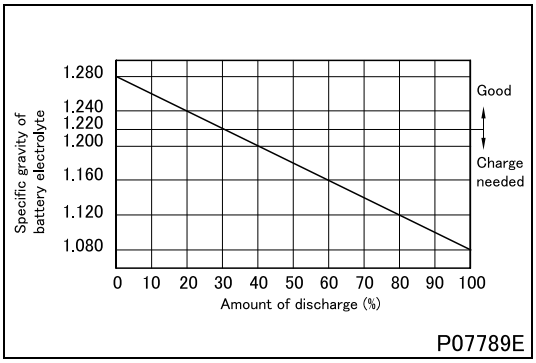

(4) Charging

- Although, as a rule, battery charging should be done with the battery removed from the vehicle, if you have to charge the battery while it is on the vehicle, make sure that you stop the engine and disconnect battery cable (–).
- Remove vent plug before charging the battery.
- For the recommended charge time and current, see the following table to avoid overcharging.

	Charge current (A)	Charge time (H)	Upper limit of fluid temperature (°C {°F})
Normal charge	Value of 5-hour rating capacity / 10	*Amount of discharge (Ah) / Charge current (A) ×1.2 (to 1.5)	45 {113}
Quick charge	Value of 5-hour rating capacity / 1.5	0.5	55 {131}

* Amount of discharge (Ah) =

$$\text{5-hour rating capacity (Ah)} \times \frac{\text{Amount of discharge (\%)}}{100}$$

- Use the graph shown on the left to calculate the amount of discharge (%).
- Use diluted sulfuric acid, made up of sulfuric acid and refined or distilled water, as the battery electrolyte.

DANGER ⚠

- **Keep naked light away from the battery while charging to prevent explosion.**
- **It is dangerous to generate sparks while charging the battery.**
- **Do not charge battery if the electrolyte level is below LOWER LEVEL, since it can cause early deterioration, heating, or explosion. Make sure to add the fluid to the specified level before charging.**

WARNING ⚠

- **Do not let the battery electrolyte level rise and overflow while charging the battery.**
- **After charging the battery, tighten vent plug, wash away sulfuric acid from the battery using water, and dry the surface.**

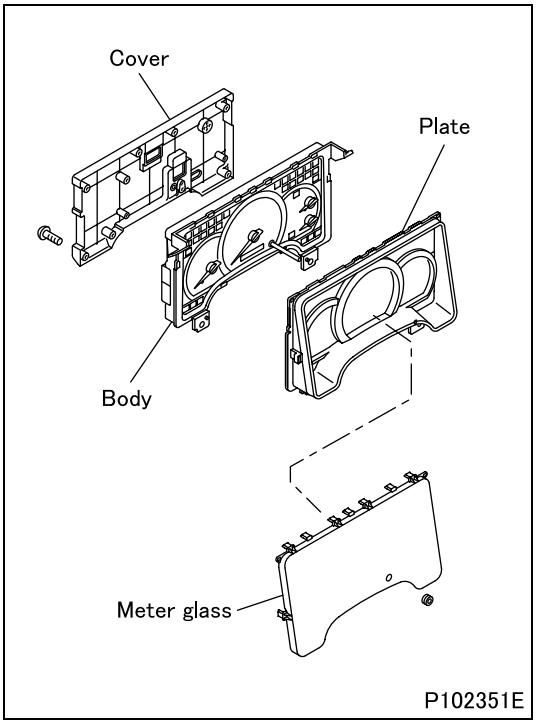

#890 Meter cluster

■Inspection: Meters

- Each sensor signal is converted into digital signal in the meter cluster and then the value is indicated by the corresponding meter on the cluster. Therefore, a single meter inspection cannot be performed.
  Each meter should be checked indirectly by checking its related harnesses and parts.
- If the related harnesses and parts are normal but the meter indication is faulty, replace the meter cluster.

54-12 STARTER AND ALTERNATOR

#930 STARTER

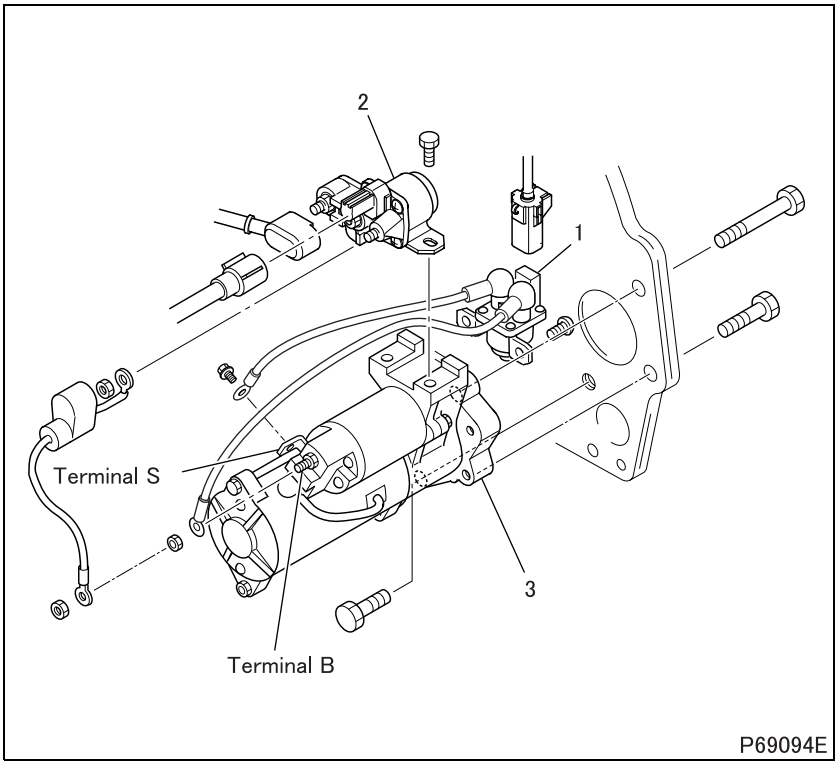

● **Removal sequence**

1 Starter relay
2 Glow relay <Except FE83>
3 Starter

WARNING ⚠

- **Before removing the starter, disconnect the (–) battery cable and insulate the cable and the (–) battery terminal with tape.**
- **It is dangerous to leave the (–) battery cable connected since the battery cable voltage is always present at terminal B.**

● **Installation sequence**

Follow the removal sequence in reverse.

M E M O

#930 STARTER

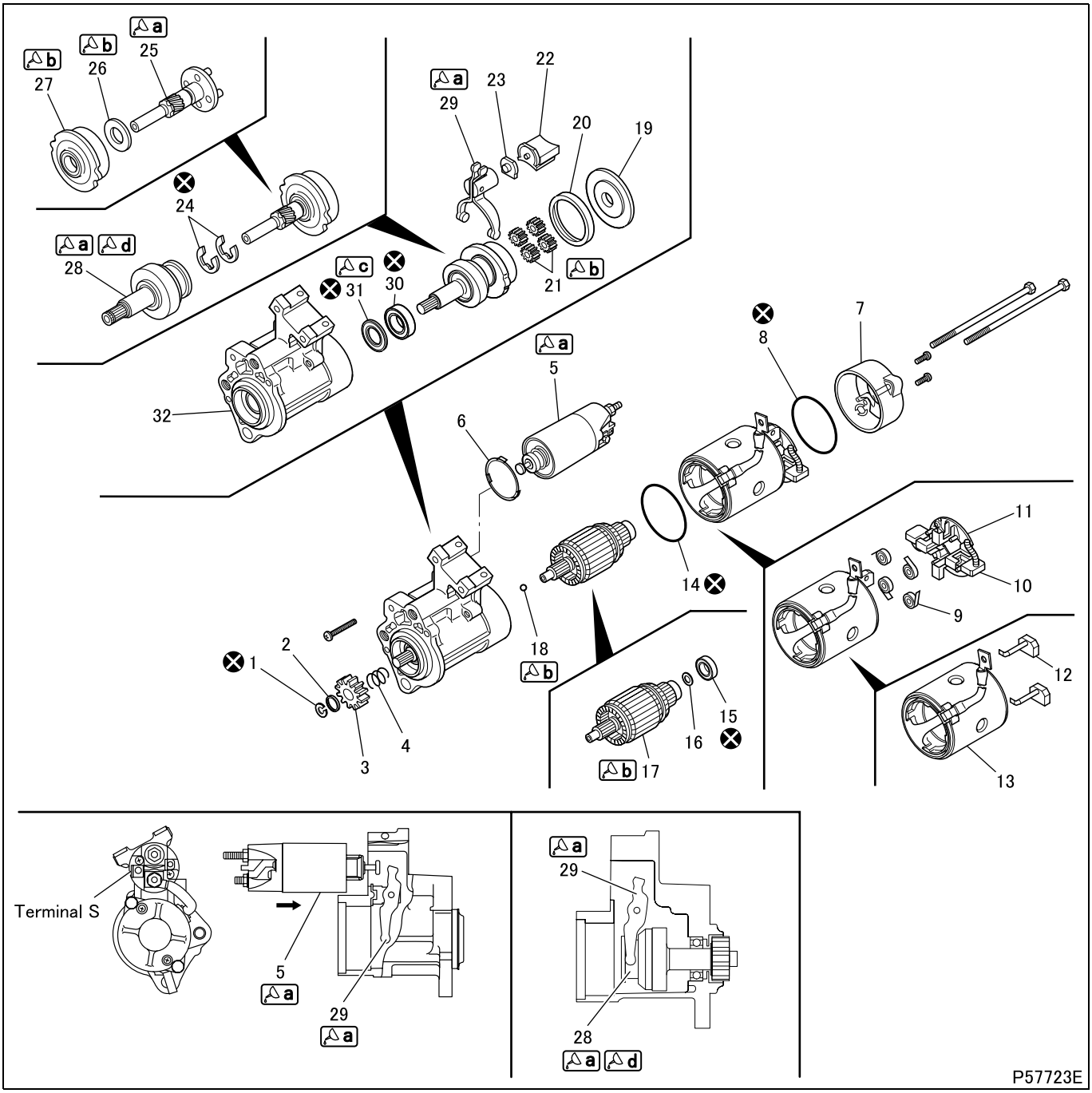

● **Disassembly sequence**

1 Stopper ring
2 Pinion stopper
3 Pinion
4 Spring
5 Magnetic switch
6 Shim
7 Rear bracket
8 Packing
9 Brush spring
10 Brush (–)
11 Brush holder
12 Brush (+)
13 Yoke
14 Packing
15 Rear bearing
16 Washer
17 Armature
18 Ball
19 Cover
20 Rubber packing
21 Planetary gear
22 Rubber packing
23 Plate
24 E-ring
25 Gear shaft
26 Washer
27 Internal gear
28 Overrunning clutch
29 Lever
30 Front bearing
31 Oil seal
32 Front bracket

⊗: Non-reusable parts

CAUTION ⚠

- **When the armature is removed, the ball may come out with it. Take care not to lose the ball.**

- Do not remove the rear bearing unless defects are evident.
- It is not necessary to remove the pinion when only the motor section needs to be disassembled for inspection, like when inspecting brushes and related parts.
- Be sure to remove the pinion before disassembling any other parts.

● Assembly sequence

Follow the disassembly sequence in reverse.

- Whenever the magnetic switch is replaced, the pinion gap must be adjusted.
- The rubber packing is serviceable if any defect is not found.

Service standards (Unit: mm {in.})

Location	Maintenance item			Standard value	Limit	Remedy
–	Pinion gap			0.5 to 2.0 {0.02 to 0.079}	–	Adjust
–	No-load characteristics	With 11 V applied	Current	180 A or less	–	Correct or replace
			Rotation speed	3800 rpm or higher	–	
9	Brush spring pressure			29.2 to 39.4 N {6.6 to 8.9 lbs, 3 to 4 kgf}	13.7 N {3.1 lbs, 1.4 kgf}	Replace
10, 12	Brush length			18 {0.71}	11 {0.43}	Replace
17	Commutator outside diameter			32 {1.26}	31.4 {1.24}	Replace
	Runout of commutator periphery			–	0.1 {0.0039} or higher	
	Mold depth between segments			0.5 to 0.8	0.2 {0.0079} or less	Correct or replace

Lubricant and/or sealant

Mark	Points of application	Specified lubricant and/or sealant	Quantity
a	Lever contact surface of magnetic switch	Multipurpose grease [NLGI No. 2 (Li soap)]	As required
	Sliding surfaces of gear shaft and overrunning clutch		
	Sliding surfaces of lever and overrunning clutch		
b	Sliding surfaces of armature and gear shaft	Molykote AG650	As required
	Ball		
	Teeth of planetary gear and internal gear		
	Washer		
c	Oil seal	Multipurpose grease [NLGI No.2 (Li soap)] or grease attached to oil seal	As required
d	Splines of overrunning clutch	Multemp OA-171 (kyodo Yushi Co., Ltd.)	As required

Special tools

Mark	Tool name and shape	Part No.	Application
ⓒa	Bearing remover and installer A: Bearing remover and installer B: Bearing installer 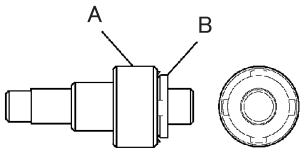 P50804	MH063596 A: MH063614 B: MH063618	Removal and installation of front bearing

◆Work before disassembly◆

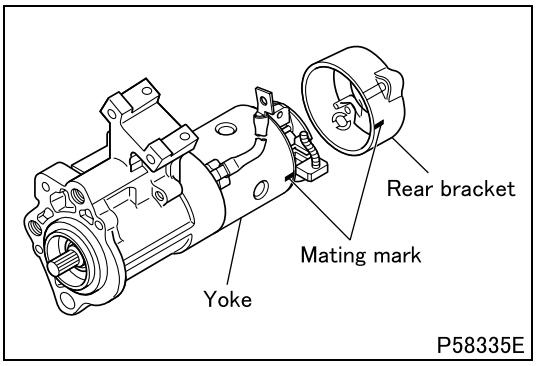

P58335E

■ **Mating mark: Rear bracket and yoke**

◆Disassembly procedure◆

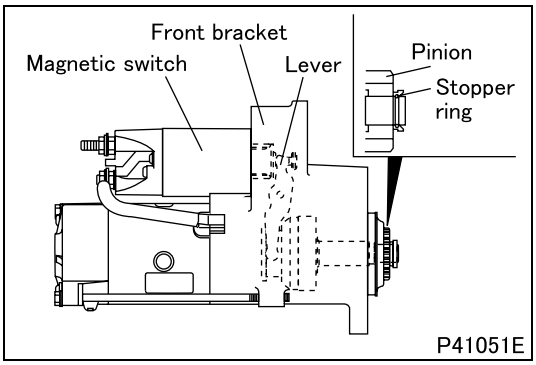

P41051E

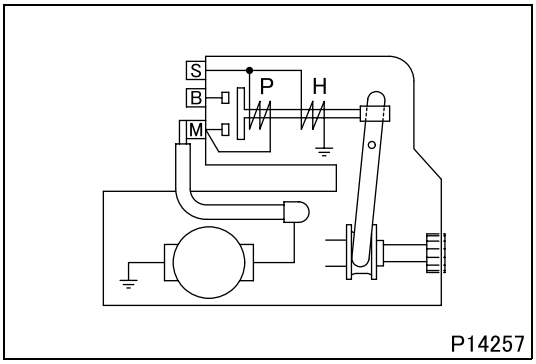

P14257

■ **Disassembly: Pinion**

- For removal of the pinion, current must be supplied to the starter such that the pinion springs out.

WARNING ⚠

- **When the starter is energized, the pinion will spring out and rotate. Be careful not to touch it with your hands.**
- **The magnetic switch may become very hot during inspections. Be careful when touching it.**

CAUTION ⚠

- **Do not energize the pull-in coil P for longer than 10 seconds, and do not energize the holding coil H for longer than 30 seconds. If these periods are exceeded, the coils may overheat and burn out.**
- **To make the pinion spring out, be sure to energize the starter such that its parts are positioned correctly. If the starter is not energized and the lever is pulled to make the pinion come out, the front bracket and/or lever may be damaged by the shock inflicted upon them when the stopper ring is removed.**
- **When current is supplied to the starter, a large current (100 A or higher) will flow. For inspection purposes, use booster cables or similarly thick cables. It is also important to ensure that all connections are secure.**

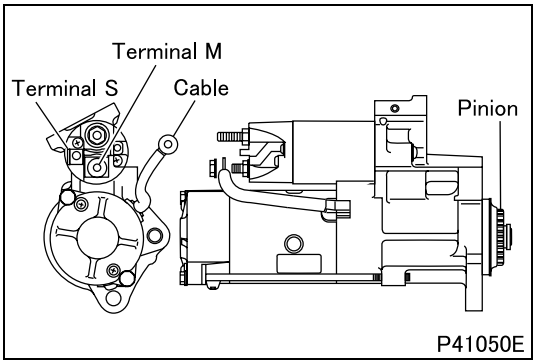

- Connect the starter as illustrated.

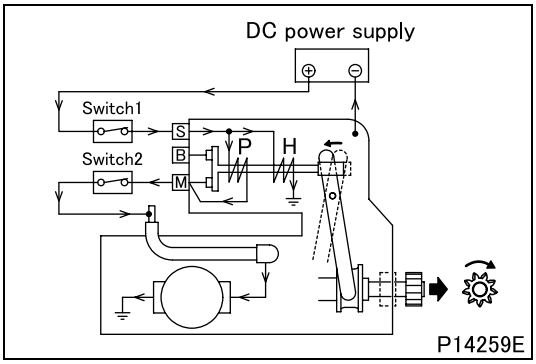

- The following operations are performed with current supplied to the starter. Thus, the entire procedure for removal of the pinion must be completed within 30 seconds.
  - Turn ON switches 1 and 2 to supply current to the starter. The pinion will spring out and rotate.

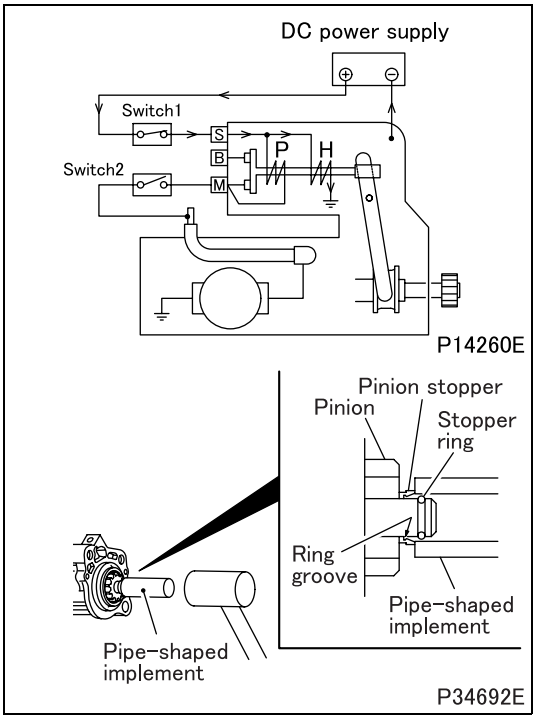

- After the pinion starts to rotate, quickly (within five seconds) turn OFF switch 2 to stop the pinion's rotation.

CAUTION ⚠

- **When switches 1 and 2 are turned ON, the pull-in coil P and holding coil H are both energized. The circuit is connected such that no voltage is applied to starter terminal B, so current flows to the pull-in coil while the pinion rotates. To prevent the pull-in coil from burning out, it is essential to turn OFF switch 2 quickly (within five seconds) after the pinion starts to rotate.**

- Apply a pipe-shaped implement to the pinion stopper.
- Using a hammer, lightly tap the pipe-shaped implement to remove the stopper ring from the ring groove of the pinion stopper.
- Remove the stopper ring and pinion.
- Turn OFF switch 1 to de-energize the starter.

CAUTION ⚠

- **When the starter is de-energized, the mechanism will attempt to pull in the pinion. Thus, the stopper ring may slip back into the ring groove of the pinion stopper. If this happens, energize the starter and go through the pinion removal procedure again.**

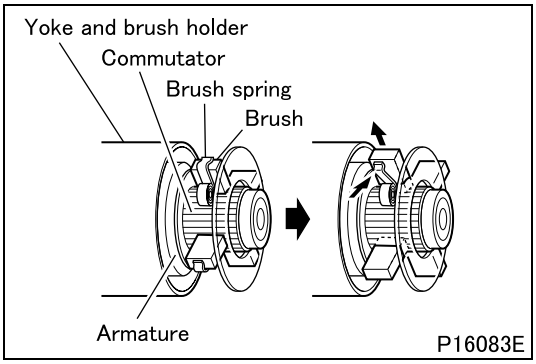

■ **Disassembly: Yoke and brush holder**

- Use the following method to remove the yoke and brush holder in order to prevent the commutator of the armature from being damaged by the brushes.
  - Lift the brushes away from the commutator and hold them lifted by applying the brush springs against the sides of the brush springs.

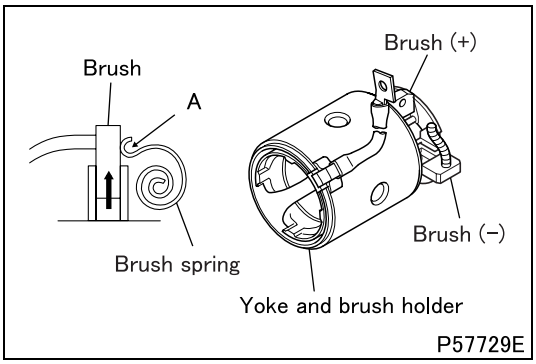

  - Pull part A of each brush spring and pull up the brushes.
  - Hold the brushes in position with the brush springs as illustrated.
  - Remove the yoke and brush holder.

■ **Disassembly: Gear shaft and internal gear**

- Remove the E-rings and then the gear shaft and internal gear from the overrunning clutch.
  Proceed as follows if the gear shaft cannot be removed due to interference of the splined section of gear shaft with internal parts of the overrunning clutch.
  - Press the gear shaft against the overrunning clutch.
  - Turn the gear shaft approx. 1/8 of a turn to change the position of splined section.

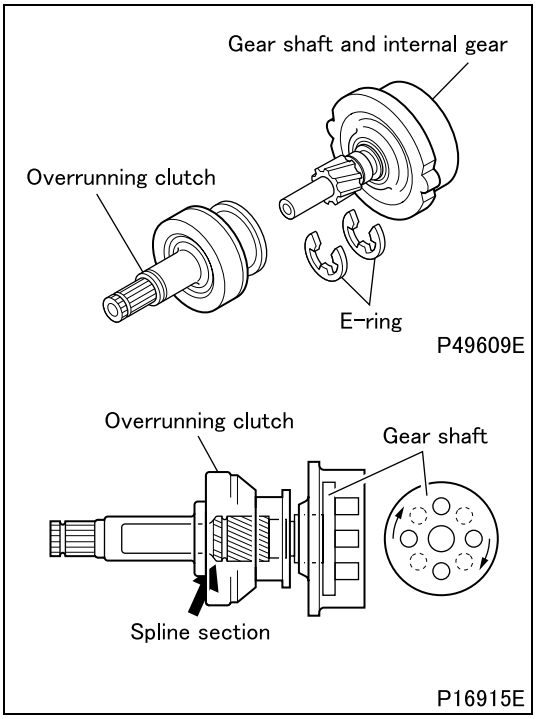

■ **Disassembly: Front bearing**

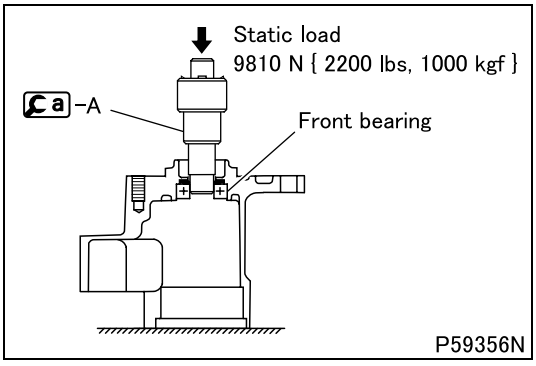

◆Inspection procedure◆

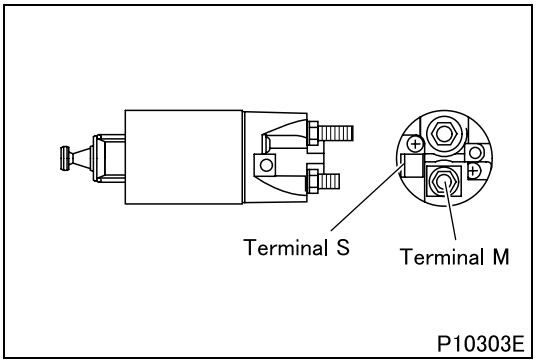

■**Inspection: Magnetic switch**

- Perform the following checks, and if any fault is found, replace the switch.

(1) Test for coil open circuit

- Check that continuity exists between terminals S and M.

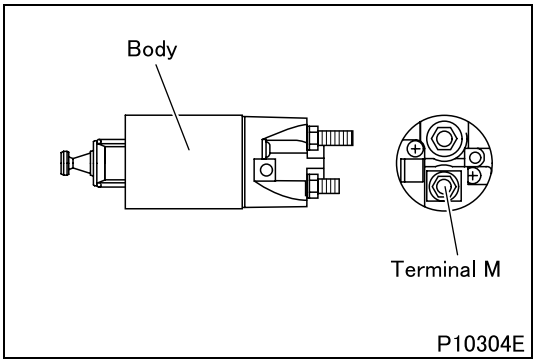

- Check that continuity exists between terminal M and the body.

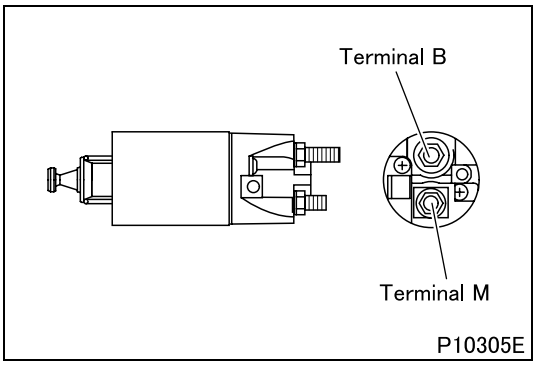

(2) Test for fused-together contacts

- Check that continuity does not exist between terminals B and M.

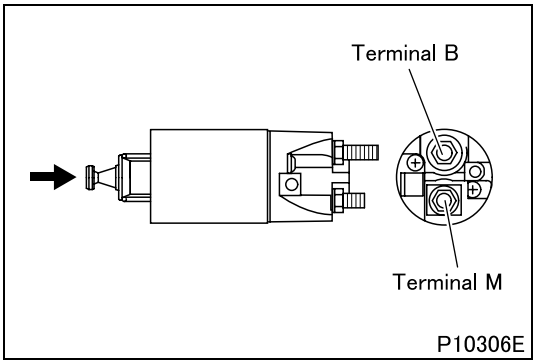

(3) Test for contact-to-contact continuity

- Push in the end of the magnetic switch to close the internal contacts. Then, check that continuity exists between terminals B and M.

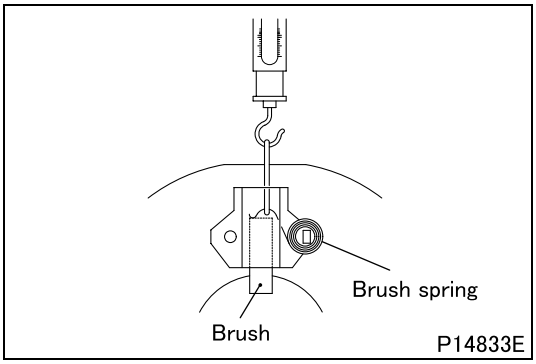

■ **Inspection: Brush spring**

- Using new brushes, measure the load required to separate each brush spring from its brush.
- If either measurement is lower than the specified limit, replace the brush springs.

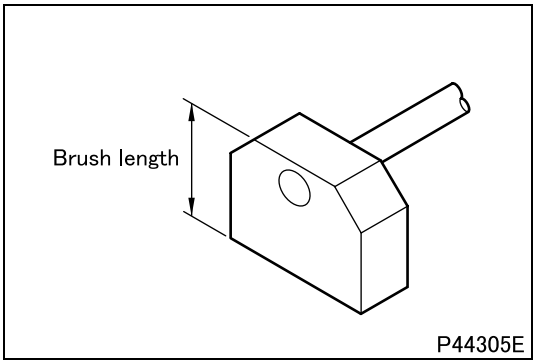

■ **Inspection: Brush (–)**

(1) Brush length

- If either brush (–) is shorter than the limit, it must be replaced.

CAUTION ⚠

- **Brush (–) must be replaced together with the brush holder.**

(2) Armature commutator contact surface of brush

- If the commutator contact surface of either brush is rough or unevenly worn, rectify it with emery paper (#300 to 500).

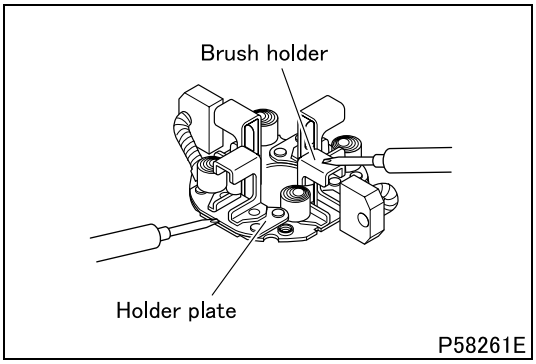

■ **Inspection: Brush holder**

- Thoroughly clean the (+) brush holder and the (–) holder plate, then, check that continuity does not exist between them.
- If continuity exists, there is a short circuit and the brush holder must be replaced.

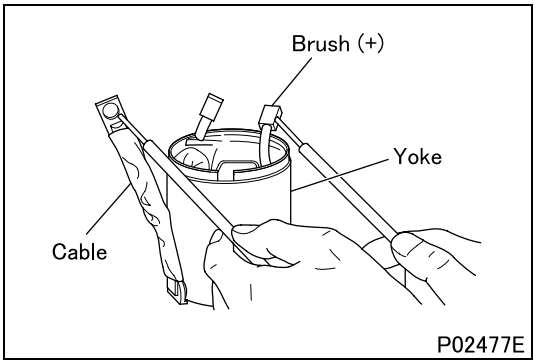

■ **Inspection: Yoke**

(1) Test for coil open circuit

- Check that continuity exists between the cable and the (+) brush.
- If there is no continuity, there is an open circuit and the yoke or (+) brush must be replaced.

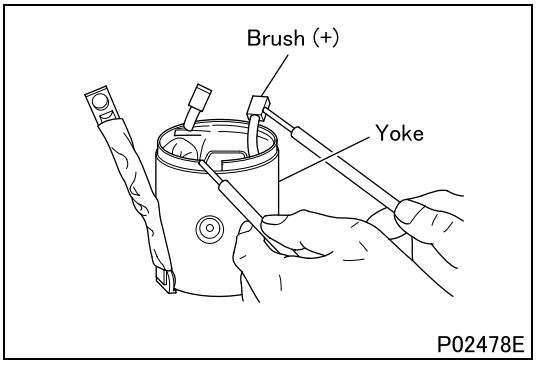

(2) Test for coil grounding

- Check that continuity does not exist between the yoke and the (+) brush.
- If continuity exists, the coil is grounded. Inspect the insulation, and replace the yoke and the (+) brush if the insulation cannot be rectified.

CAUTION ⚠

- **The coil may be grounded to the yoke due to the accumulation of worn-off metal particles from the brushes and/or armature.**

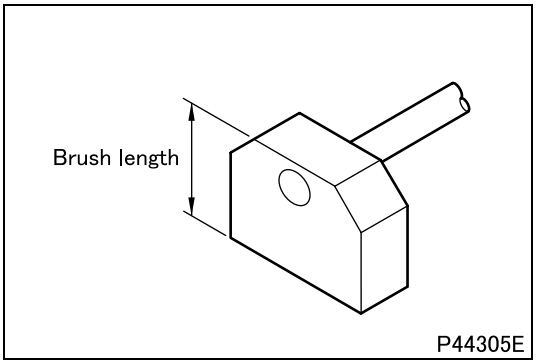

■ **Inspection: Brush (+)**

(1) Brush length

- If either brush (+) is shorter than the limit, it must be replaced.

(2) Armature commutator contact surface of brush

- If the commutator contact surface of either brush is rough or unevenly worn, rectify it with emery paper (#300 to 500).

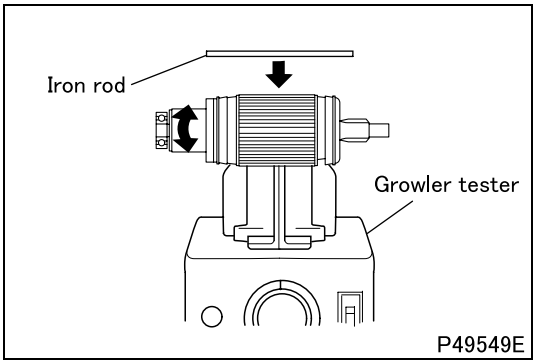

■ **Inspection: Armature**

(1) Test for coil short circuit

- Hold an iron rod parallel with the armature.
- Slowly rotate the armature by hand.
- If the iron rod vibrates or is pulled toward the armature, the coil is short-circuited and the armature must be replaced.

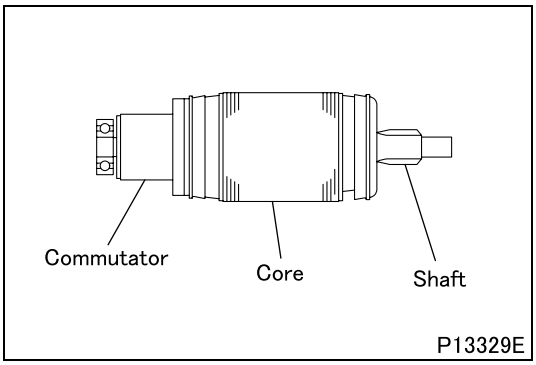

(2) Test for coil grounding

- Check that continuity does not exist between the commutator and the core (or shaft).
- If continuity exists, the coil is grounded and the armature must be replaced.

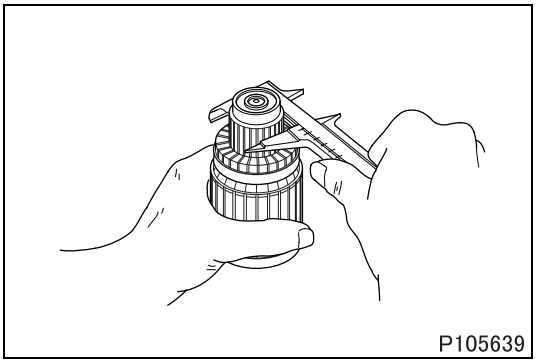

(3) Commutator outside diameter

- If the measurement is out of specification, replace the armature.

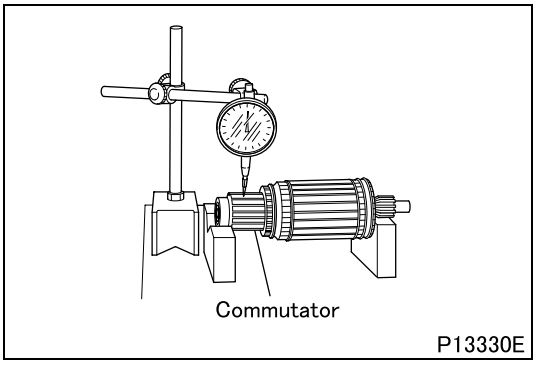

(4) Runout of commutator periphery

- If the reading exceeds the specified limit, rectify the commutator of the armature, making sure the outside diameter stays within specification.

(5) Condition of commutator surface

- If the surface is rough or has stepped wear, rectify it with emery paper (#300 to 500).
- After rectifying the surface, check the extent of commutator runout.

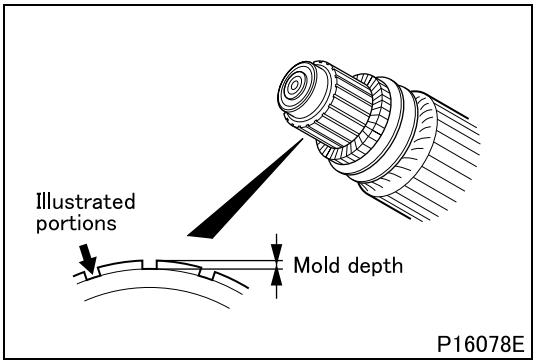

(6) Mold depth between segments

- If the measurement is lower than the specified limit, rectify or replace the armature.
- To rectify the armature, grind the illustrated portions.

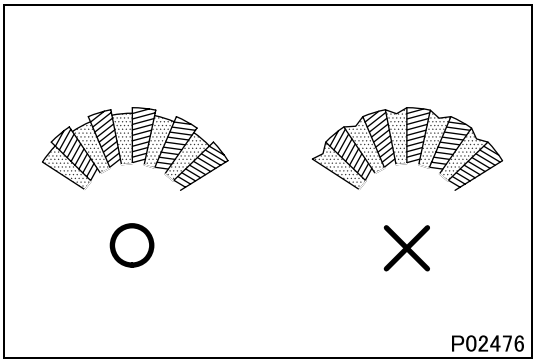

- If the mold is worn as illustrated, rectify or replace the armature.

○: Acceptable
×: Unacceptable

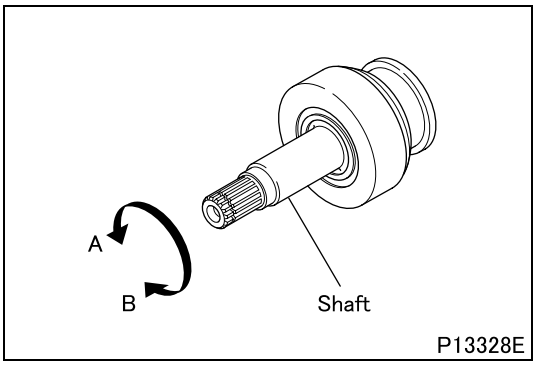

■ Inspection: Overrunning clutch

If the following inspections reveal any abnormality, replace the overrunning clutch.

- Turn the shaft in direction B and check that it rotates smoothly.
- Turn the shaft in direction A and check that it locks.

◆Assembly procedure◆

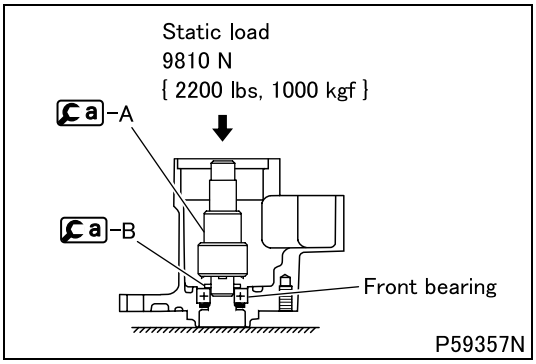

■ Assembly: Front bearing

- Press-fit the front bearing using Ca-A and Ca-B.

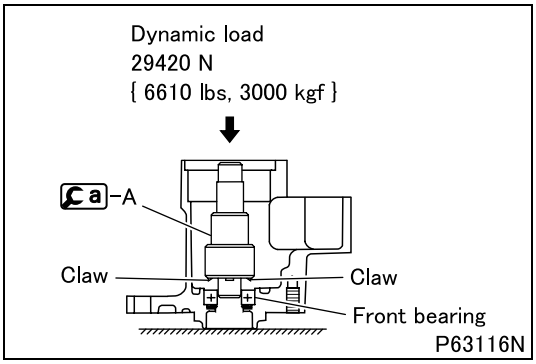

- After the press fitting, caulk the front bearing using the claw on a -A.

CAUTION ⚠

- **Avoid re-caulking previously caulked points.**

■ Assembly: Yoke and brush holder

- To install the yoke and brush holder, follow the removal sequence in reverse.
  (See "**■ Disassembly: Yoke and brush holder**".)

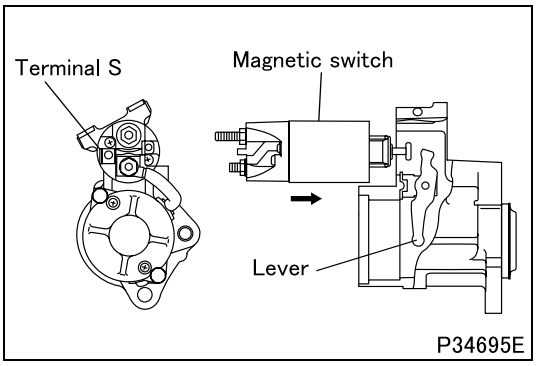

■ Assembly: Magnetic switch

- Fit the magnetic switch onto the lever with terminal S aligned as illustrated.

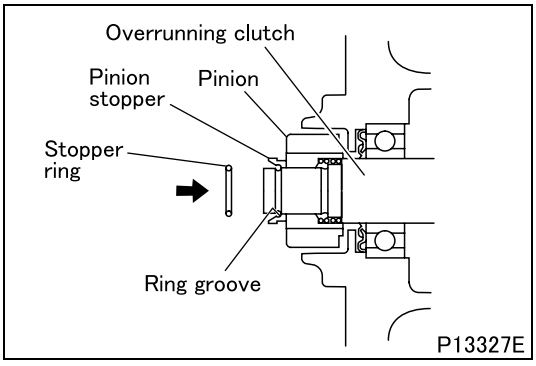

■ Assembly: Pinion

- For installation of the pinion, it is not necessary to supply current to the starter.
  - Fit the pinion stopper and pinion onto the overrunning clutch, making sure they are oriented as illustrated.
  - Fit the stopper ring into the ring groove of the overrunning clutch.

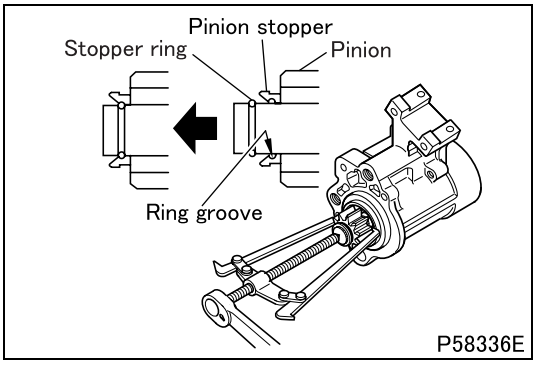

- Pull the pinion hard and securely fit the stopper ring into the ring groove of the pinion stopper.

◆Inspection after assembly◆

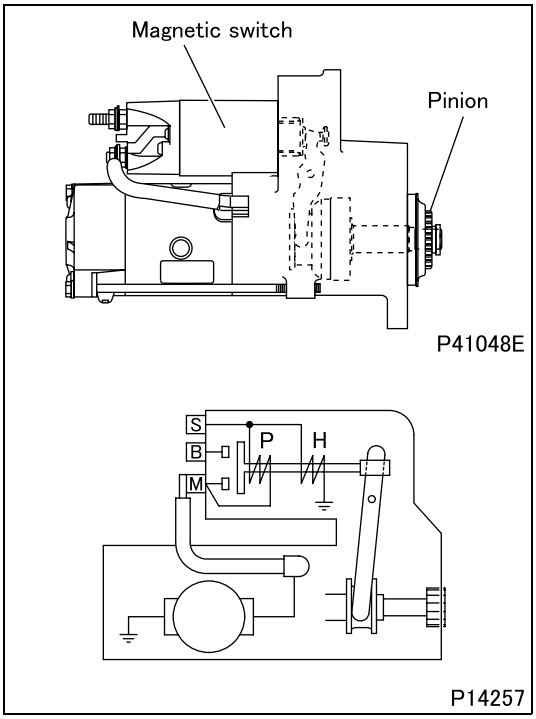

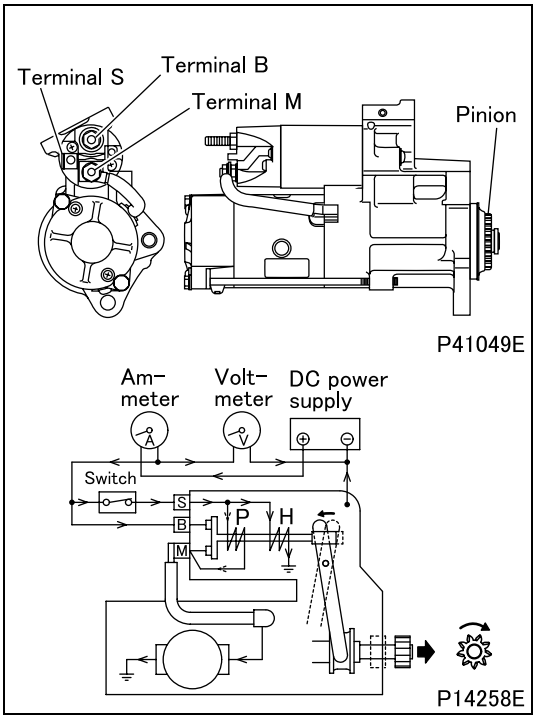

■ **Inspection: Performance and pinion gap**

- After assembling the starter, perform inspections with current supplied to it.

WARNING ⚠

- **When the starter is energized, the pinion will spring out and rotate. Be careful not to touch it with your hands.**
- **The magnetic switch may become very hot during inspections. Be careful when touching it.**

CAUTION ⚠

- **Do not energize the pull-in coil P for longer than 10 seconds, and do not energize the holding coil H for longer than 30 seconds. If these periods are exceeded, the coils may overheat and burn out.**
- **When current is supplied to the starter, a large current (100 A or higher) will flow. For inspection purposes, booster cables or similarly thick cables must therefore be used. It is also important to ensure that all connections are secure.**

(1) Performance test

- Connect the starter as illustrated.
- Set the voltage to 11 volts DC.

CAUTION ⚠

- **The voltage applied must not exceed 12 V.**

- The following operations are performed with current supplied to the starter. Thus, the entire test (consisting of measurement of the current flowing through the starter and measurement of the starter's rotational speed) must be completed within 30 seconds.
  - Turn ON the switch to supply current to the starter. The pinion will spring out and rotate.

CAUTION ⚠

- **When the switch is turned ON, the pull-in coil P and holding coil H are both energized. When the large current from the DC power supply flows from terminal B to terminal M, the supply of current to the pull-in coil P is cut; only the holding coil H remains energized. To prevent the holding coil from burning out, it is essential to complete all operations within 30 seconds.**

  - Measure the current and the starter's rotational speed. To measure the rotational speed, shine a stroboscope on the pinion.
  - Turn OFF the switch to de-energize the starter.
- If either measurement is out of specification, disassemble and inspect the starter again.

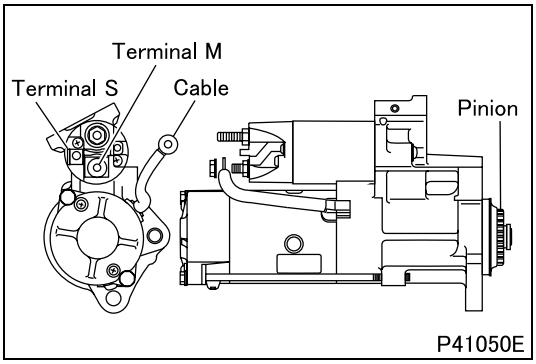

(2) Pinion gap

- Connect the starter as illustrated.

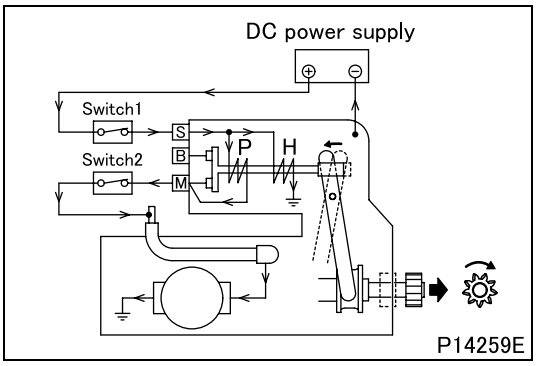

- The following operations are performed with current supplied to the starter. Thus, the entire procedure for measurement of the pinion gap must be completed within 30 seconds.
  - Turn ON switches 1 and 2 to supply current to the starter. The pinion will spring out and rotate.

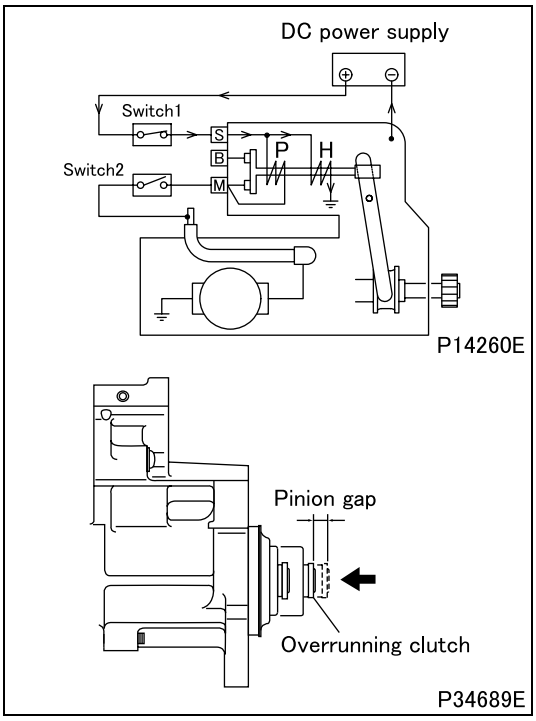

  - After the pinion starts to rotate, quickly (within five seconds) turn OFF switch 2 to stop the pinion's rotation.

CAUTION ⚠

- **When switches 1 and 2 are turned ON, the pull-in coil P and holding coil H are both energized. The circuit is connected such that no voltage is applied to starter terminal B, so current flows to the pull-in coil while the pinion rotates. To prevent the pull-in coil from burning out, it is essential to turn OFF switch 2 quickly (within five seconds) after the pinion starts to rotate.**

  - Pull out the end of the overrunning clutch and then lightly push in the end of the overrunning clutch and measure the amount of movement in the axial direction, i.e., the pinion gap.
  - Turn OFF switch 1 to de-energize the starter.
- If the measurement is out of specification, replace the lever.

#940 ALTERNATOR

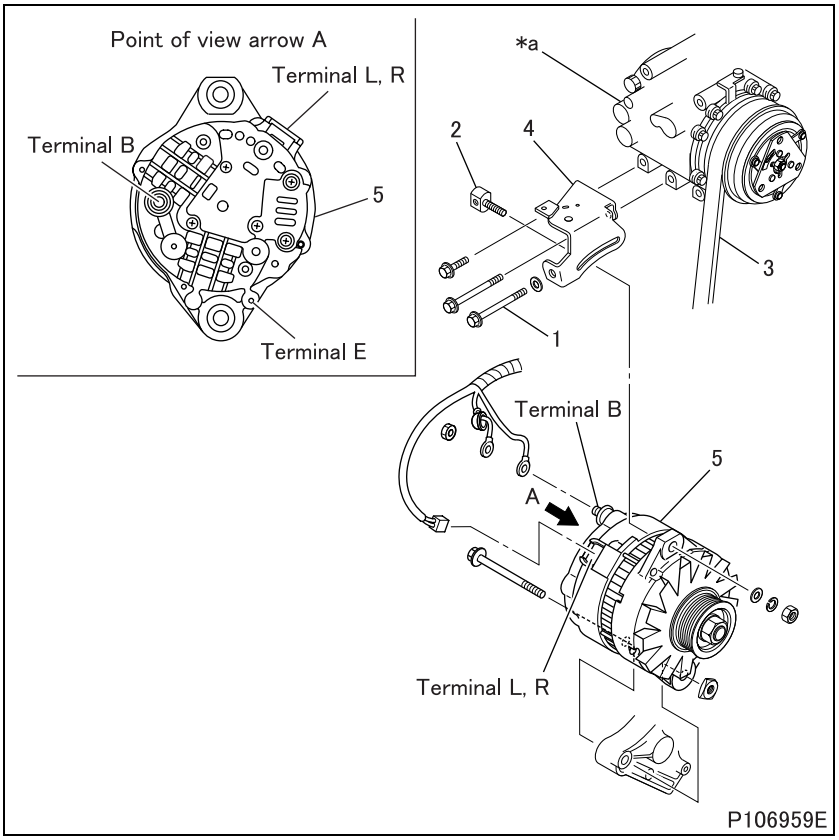

● **Removal sequence**

1 Adjusting bolt
2 Adjusting shaft
3 Belt
4 Adjusting plate
5 Alternator

***a**: Air-conditioner compressor

WARNING ⚠

- **Before removing the alternator, disconnect the (–) battery cable and insulate the cable and the (–) battery terminal with tape.**
- **It is dangerous to leave the (–) battery cable connected since the battery cable voltage is always present at terminal B.**

● **Installation sequence**

Follow the removal sequence in reverse.

After installing the alternator, adjust the belt tension. (See Gr14.)

Service standards

Location	Maintenance item		Standard value	Limit	Remedy
5	Alternator output current (*when alternator is hot and producing 13.5 V)	At 1500 rpm	51.5 A or more	–	Correct or replace
		At 2500 rpm	82.5 A or more	–	
		At 5000 rpm	104 A or more	–	
	Adjustment voltage of regulator (at 5000 rpm, 5 A is loaded)		14.7 ± 0.3 V	–	Replace

* The hot condition is that which occurs after the alternator has been running at normal ambient temperature at 5000 rpm and maximum output for 30 minutes.

◆Inspection procedure◆

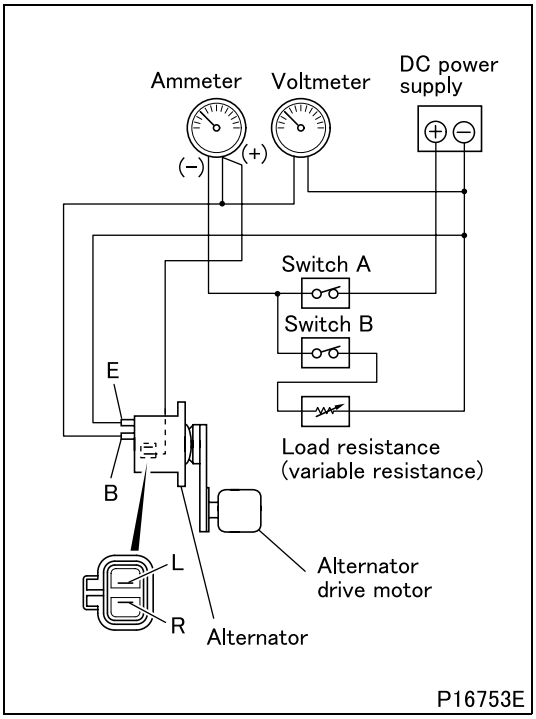

■ Inspection: Alternator

(1) Alternator output current (bench test)

- Connect the alternator as illustrated.

CAUTION ⚠

- **Wires with sufficient thickness should be used for wiring and each connection should be securely fastened.**

B: Terminal B
E: Terminal E
L: Terminal L
R: Terminal R

- Increase load resistance to the maximum (condition under which the load current hardly flows).
- Turn switch A and B ON.
- Run alternator at 5000 rpm for 30 minutes by adjusting load resistance so that electric current can conform to the following standard.

  Alternator nominal current

Current
Approx. 104 A

- Measure the current at each specified revolution of alternator.
- If the measured value is lower than the standard value, disassemble and check alternator.

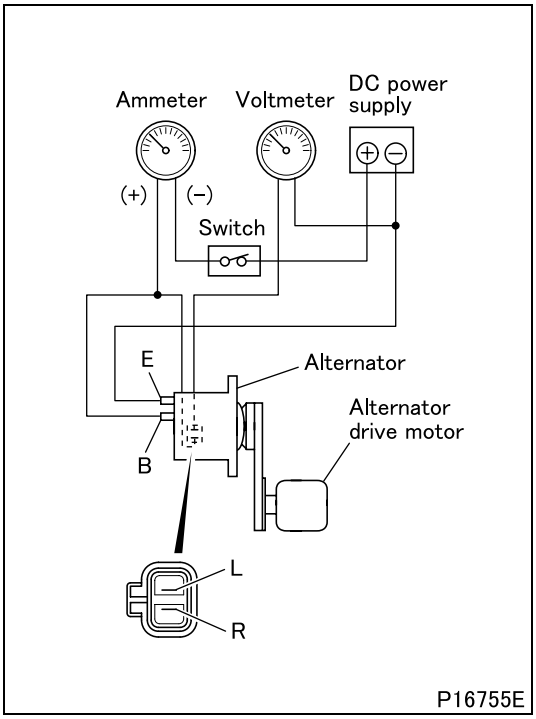

(2) Adjustment voltage of regulator (bench test)

- Connect the alternator as illustrated.

B: Terminal B
E: Terminal E
L: Terminal L
R: Terminal R

- Turn switch ON.
- Run alternator at low speeds.
- Increase the speed of alternator to 5000 rpm and measure the voltage (adjustment voltage) at this speed. At the same time, make sure that the current is 10 amperes or less at 5000 rpm.
- If the measured value deviates from the standard value, do as follows:
  - If higher than the standard value: Replace the regulator.
  - If lower than the standard value: Inspect the alternator related parts before replacing the regulator.

M E M O

#940 ALTERNATOR

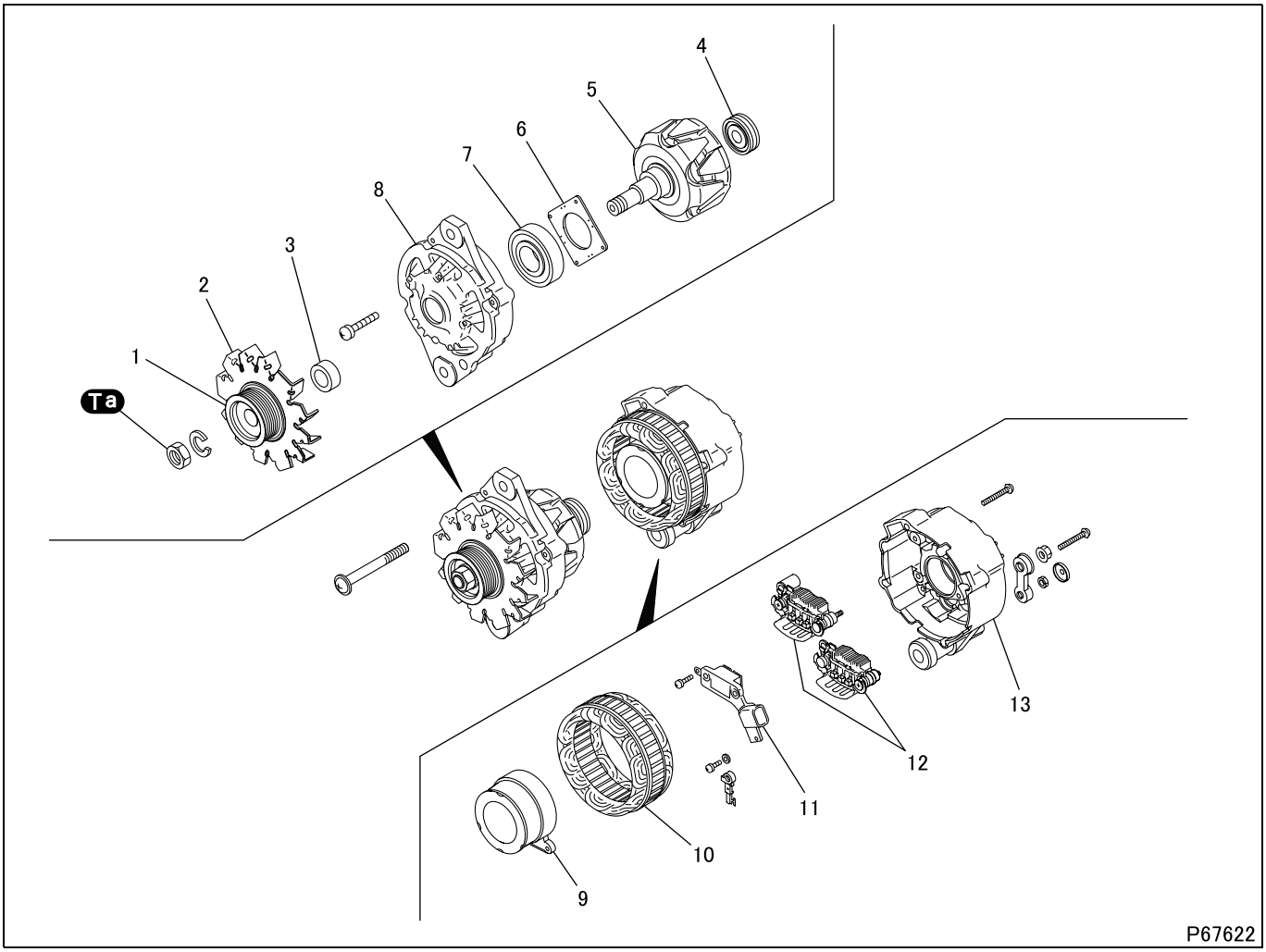

● **Disassembly sequence**

1 Pulley
2 Fan
3 Spacer
4 Rear bearing
5 Rotor
6 Cover
7 Front bearing
8 Front bracket
9 Field coil
10 Stator
11 Regulator
12 Rectifier
13 Rear bracket

- Do not remove the rear and front bearing, stator unless faulty.

● **Assembly sequence**

Follow the disassembly sequence in reverse.

Service standards

Location	Maintenance item	Standard value	Limit	Remedy
9	Field coil resistance (at 20°C {68°F})	1.9 to 2.3 Ω	–	Replace

Tightening torque (Unit: N·m {ft. lbs, kgf·m})

Mark	Parts to be tightened	Tightening torque	Remarks
Ta	Nut (pulley mounting)	132 to 162 {97 to 120, 13 to 17}	–

◆Disassembly procedure◆

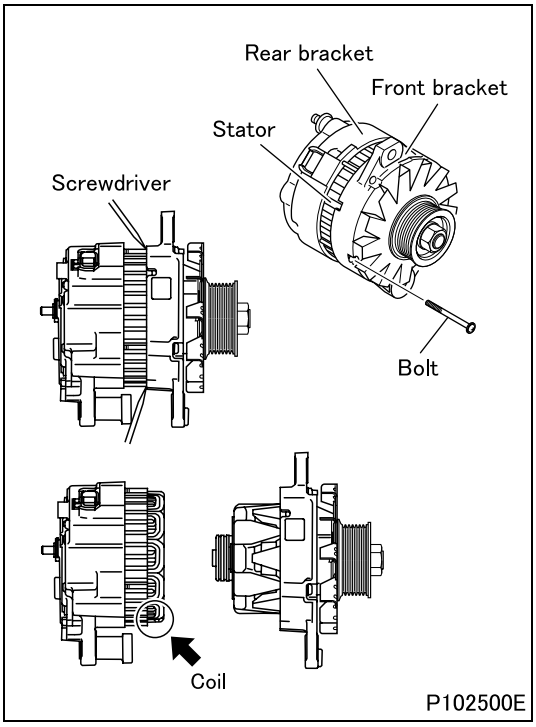

■ **Disassembly: Rotor and front bracket**

- Loosen the bolts retaining the front bracket and the rear bracket in position.
- Insert a screwdriver between front bracket and stator.
- Use the screwdriver to pry rotor and front bracket away from stator and rear bracket.

CAUTION ⚠

- **Be careful not to insert the screwdriver too deep or it will damage coil of stator and might cause a short-circuit.**

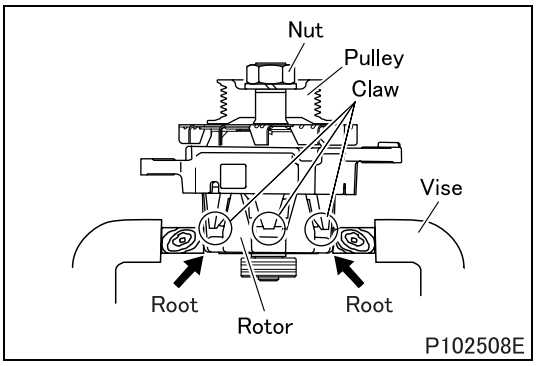

■ **Disassembly: Pulley**

- Hold the rotor in a vise and loosen the nuts to remove the pulley.

CAUTION ⚠

- **Make sure to grip the root of the core claws when you hold the rotor in a vice. Gripping claws can damage them.**

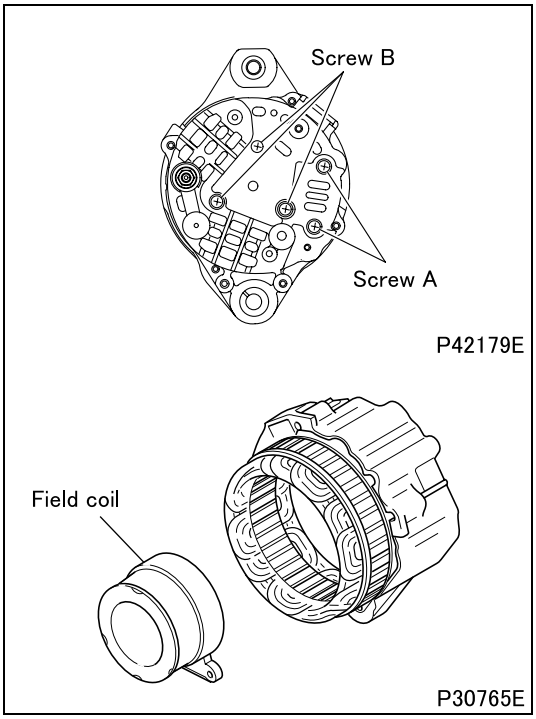

■ **Disassembly: Field coil**

- Remove screw A (2 places).

CAUTION ⚠

- **If screw B are removed first, the weight of field coil may be placed on the joining portion with regulator which is fixed with screw A, causing break of the joining portion. To avoid this, remove screw A first.**

- Remove screw B (3 places).

CAUTION ⚠

- **If screw B are removed, the field coil will fall under its own weight. Keep the field coil supported by your hand.**

- Remove field coil.

CAUTION ⚠

- **Do not remove the field coil forcibly. Otherwise the portion that joins with the regulator may be caught by the stator coil.**

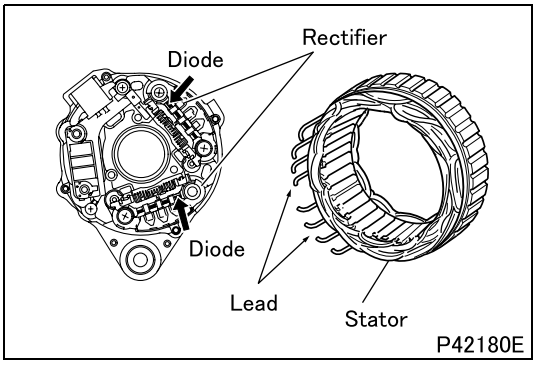

■ **Disassembly: Stator**

- Disconnect lead of stator from rectifier. The lead is soldered to diode of the rectifier at 8 places. (Each of the 2 rectifiers has 4 soldered sections.)

CAUTION ⚠

- **Unsolder within as short a time period as possible (within 5 seconds), otherwise diode can be easily damaged by heat.**

◆Inspection procedure◆

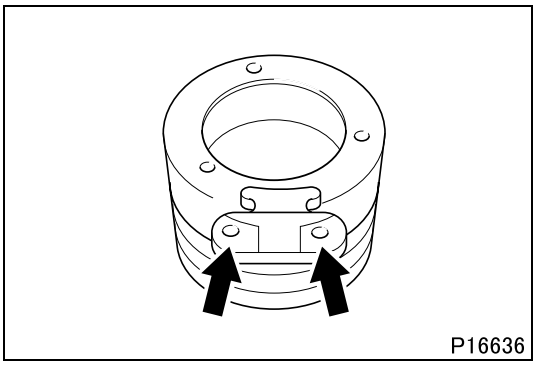

■ **Inspection: Field coil**

- Measure the resistance between the terminals of field coil.
- If the measured value deviates from the standard value, replace field coil.

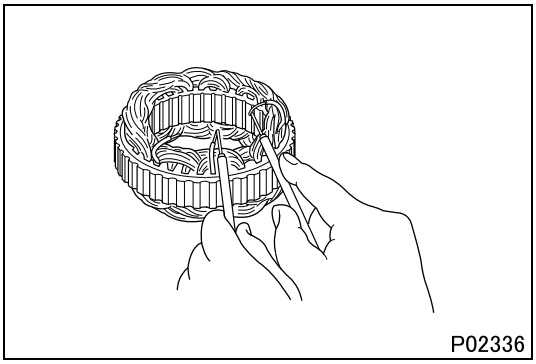

■ **Inspection: Stator**

- Perform the following checks, and if any fault is found, replace the stator.

(1) Continuity between each lead wire

- Check that there is continuity between each stator lead.
- If there is no continuity, the lead has broken.

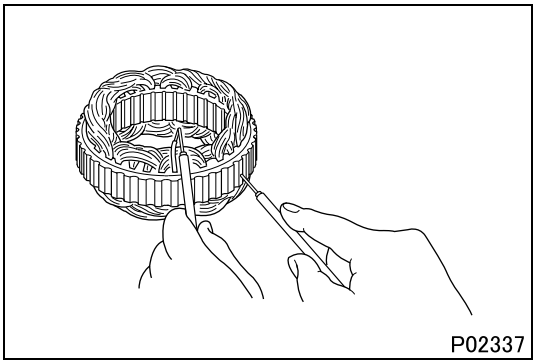

(2) Continuity between each lead wires and the core

- Check that there is no continuity between lead wires and the core.
- If there is continuity, the lead wire has short-circuited.

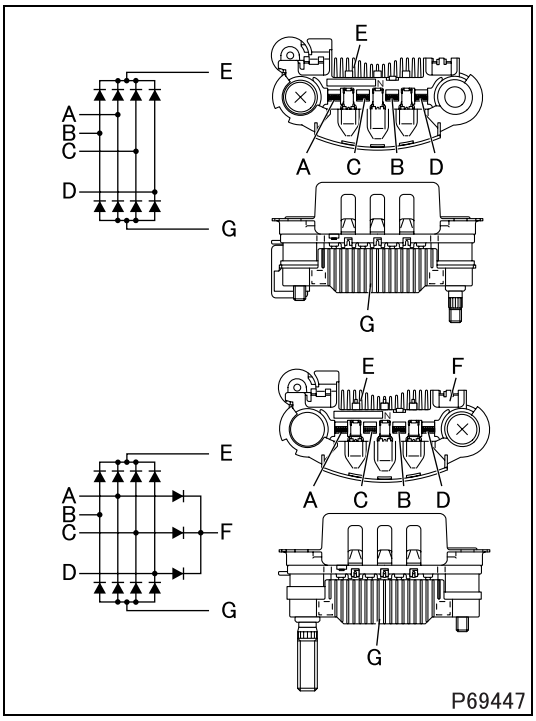

■ **Inspection: Rectifier**

- Check the function of diodes within rectifier properly. If any fault is found, replace the rectifier.

  If resistance is infinite in both cases, the diode is open.
  If resistance is close to 0 Ω in both cases, the diode has shorted.

  A, B, C, D: Lead connecting area of stator coil
  E, G: Heat sink area
  F: Regulator connecting area

- Inspection should be conducted twice, changing over the positive probe and the negative probe of the tester.
- When inspecting using a tester, the current flowing through the rectifier is smaller than usual. Therefore, an incorrect resistance value may be indicated on the tester.
  Additionally, incorrect indications become larger as the range of the tester gets smaller. Set the tester to a largest possible scale.

◆Assembly procedure◆

■ **Assembly: Stator**

- To install the stator, follow the disassembly sequence in reverse. (See "■ **Disassembly: Stator**".)

54-13 ON-VEHICLE INSPECTION AND ADJUSTMENT

#950 INSPECTION OF ALTERNATOR

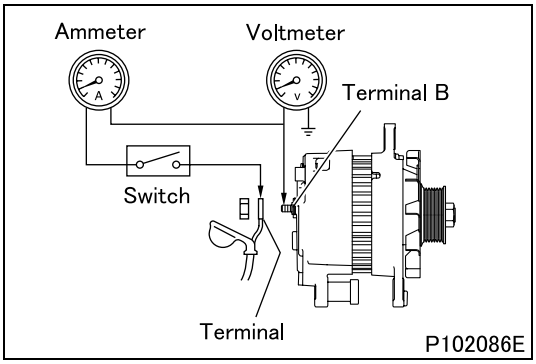

Performance test

- The on-vehicle inspection is only a simplified check. Use a test bench for accurate checking.
- Connect the meters to the alternator as shown.

WARNING ⚠

- **To prevent possible injury, be sure to disconnect the negative battery cable and insulate the cable and the negative battery terminal with tape before working on the wiring. With the negative (–) battery cable connected, battery voltage is always applied to terminal B.**
- **To connect to switch, use a lead wire with the same or larger diameter than that of the chassis harness connected to terminal B.**

- Turn on switch and make sure that voltmeter indicates battery voltage.
- Start the engine.
- Immediately turn on the switches for all lamps on the vehicle.
- Immediately accelerate the engine to the speed indicated below and measure the alternator's output current.
  Approx. 2400 rpm
- The alternator is considered to be good if the measured value is 70% or more of the nominal output current.
  Alternator nominal output

Voltage	Output current
12 V	100 A

Service standards

Location	Maintenance item	Standard value	Limit	Remedy
–	Adjusting voltage	14.7 ± 0.3 V	–	Replace

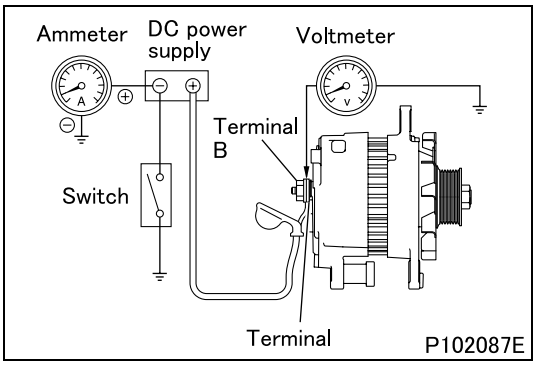

- Connect the meters to the alternator as shown.

WARNING ⚠

- **To prevent possible injury, be sure to disconnect the negative battery cable and insulate the cable and the negative battery terminal with tape before working on the wiring. With the negative (–) battery cable connected, battery voltage is always applied to terminal B.**
- **To connect to switch, use a lead wire with the same or larger diameter than that of the chassis harness connected to terminal B.**

- Turn off the switches for lamps, heater, etc. so that electric loads may not be applied during the inspection.
- Turn on switch and then start the engine.
- If the output current is 5 amperes or less when the engine speed is raised to the appropriate speed indicated below, then measure the voltage at terminal B.
  Approx. 2400 rpm
- If the output current is not less than 5 amperes, the measured value (regulated voltage) will be slightly lower.
- If the output current is 5 amperes or more, do one of the following:
  - Run the engine for a while to charge the battery.
  - Replace the battery with a fully-charged one.
- If the measured value deviates from the standard value, conduct checking again on the test bench.

#955 INSPECTION OF PREHEATING SYSTEM

1. Preparation for inspection

Service standards

Location	Maintenance item			Standard value	Limit	Remedy
–	Coolant temperature	Pre-glow time	60°C {140°F} or higher	No pre-glow operation	–	Inspect
			0 to 60°C {32 to 140°F}	About 12 seconds	–	
			0°C {32°F} or below	About 12 seconds	–	
		After-glow time	60°C {140°F} or higher	No after-glow operation	–	
			0 to 60°C {32 to 140°F}	No after-glow operation	–	
			0°C {32°F} or below	About 20 seconds	–	
		Indicator lamp ON time	60°C {140°F} or higher	No illumination	–	
			0 to 60°C {32 to 140°F}	No illumination	–	
			0°C {32°F} or below	About 8 seconds	–	

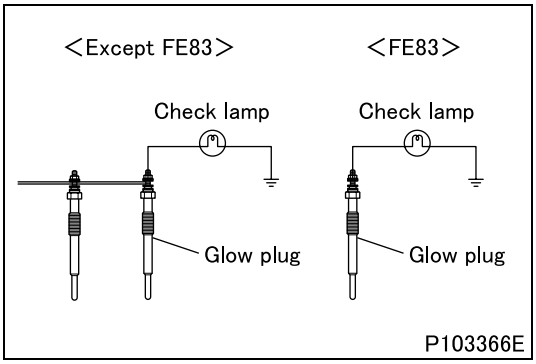

- Turn the starter switch to OFF.
- Connect a check lamp to the glow plug.
- In model FE83, the glow plugs are not connected to the connection plate. Check the glow plug by connecting the lamp to the glow plug one by one.

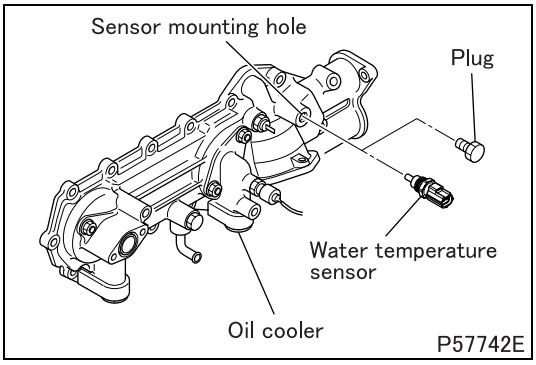

- Remove the water temperature sensor from the engine, and close the sensor mounting hole with the plug (M16 × 1.5 mm).

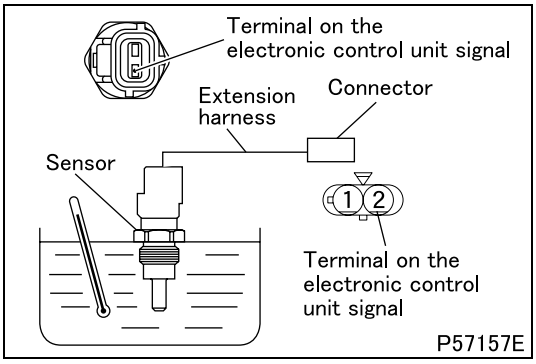

- Connect the extension harness between the water temperature sensor and connector.
- Place the water temperature sensor in a container of water.
- Conduct the following test while changing the temperature of water in the container. If anything abnormal is found, check relevant components.

(1) Pre-glow time and indicator lamp ON time checking

- Turn the starter switch to ON (without starting the engine), and confirm that the pre-glow time and indicator lamp ON time at each water temperature conform with standard values.
- Measure the illuminating time of the check lamp to measure the pre-glow time.
- Measure the meter cluster glow lamp illuminating time to measure the indicator lamp ON time.

(2) After-glow time checking

- Start the engine, and measure how long the illumination of check lamp lasts after the glow lamp on the meter cluster goes out to ensure that the after-glow time conforms with the standard value.

#960 HEADLAMP AIMING

1. Preparation before Adjustment

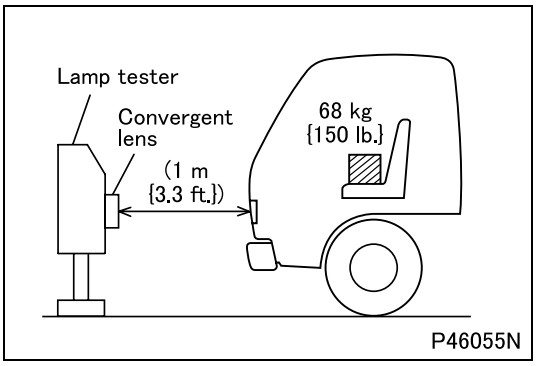

- Park the vehicle on a level place.

WARNING ⚠

- **Be sure to put tire chocks securely in place.**

- Unload the vehicle and make sure no one is in it.
- Inflate the tires to the specified pressure. (See Gr31.)
- Seat one person of an equivalent mass (68 kg {150 lb.}) in the vehicle.
- Start the engine and check that the battery is being charged.
- Place convergent lamp tester and the vehicle facing each other as shown in the drawing.

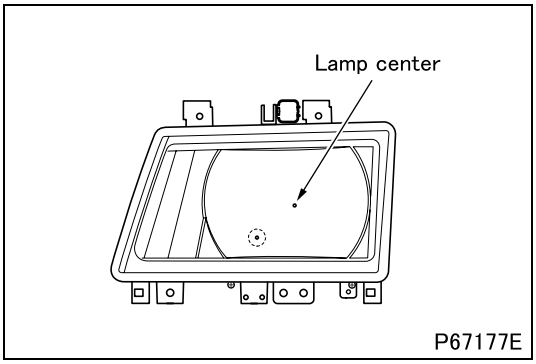

- Turn on headlamp. Align the center of headlamp bulb and the center of convergent lens of convergent lamp tester. (The drawing shows the left-hand headlamp.)

WARNING ⚠

- **Do not mask a lit headlamp for more than 10 minutes or the heat generated might cause a fire.**

2. Adjustment

2.1 Adjustment of Lower Beam

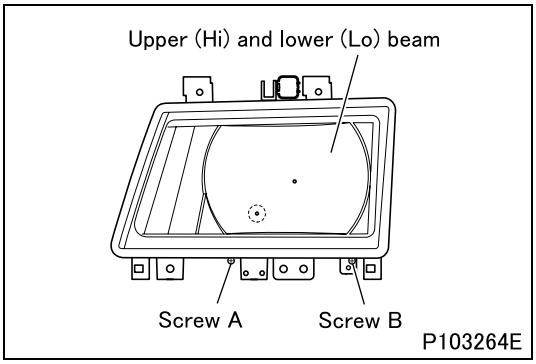

- Turn on lower beam.
- Make adjustment by the following procedure so that the elbow point of lower beam cut-off line is in the illustrated position.
- Vertical adjustment: Turn screw A.
- Horizontal adjustment: Turn screw B.

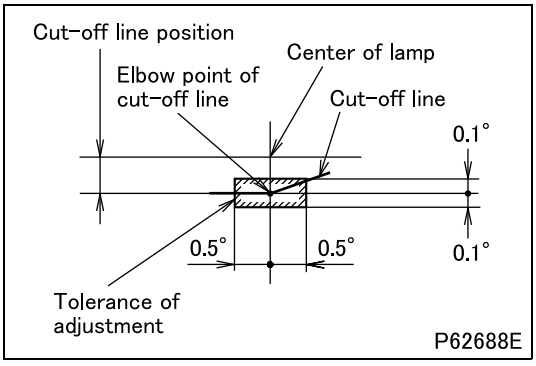

- Adjust the optical axes of the lower beams so that the cut-off line position can conform to the standard value.

Cut-off line position	Standard value
	0.7°

Adjusting direction for optical axis

<Left-hand headlamp>

	Upward	Downward	Leftward	Rightward
Screw A	Counter-clockwise	Clockwise	–	–
Screw B	–	–	Clockwise	Counter-clockwise

<Right-hand headlamp>

	Upward	Downward	Leftward	Rightward
Screw A	Counter-clockwise	Clockwise	–	–
Screw B	–	–	Counter-clockwise	Clockwise

54-14 CONNECTOR CONFIGURATION CHART

CONNECTOR CONFIGURATION CHART

AA type

Number shows number of pins	Female connector	Male connector
AA1A		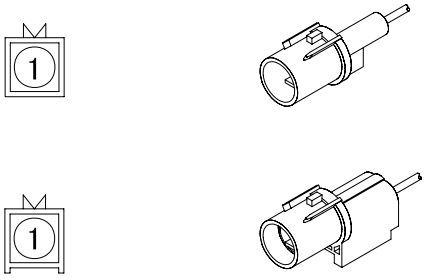
AA2A	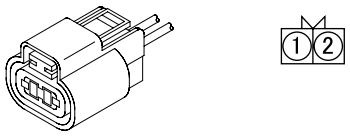	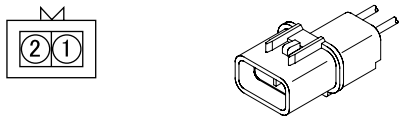
AA2B	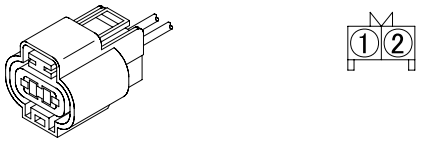	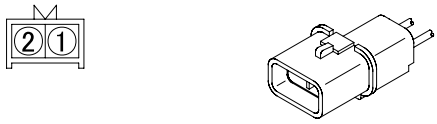
AA3A		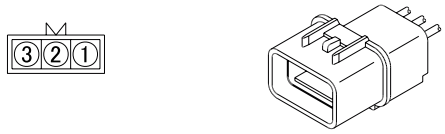
AA3B	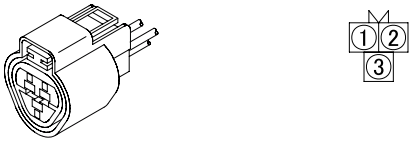	
AA4A	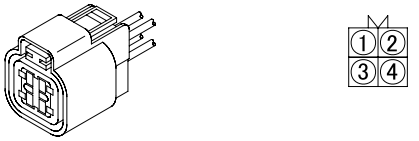	
AA4B	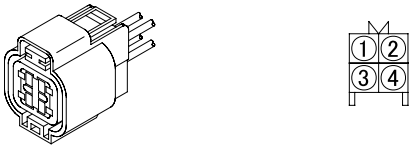	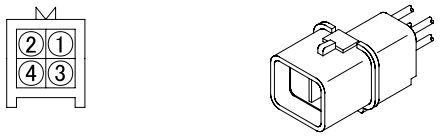
AA6A	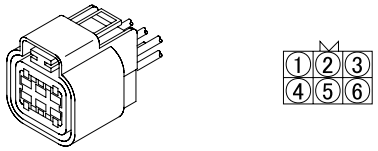	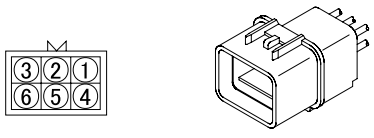

Number shows number of pins	Female connector	Male connector
AA6B	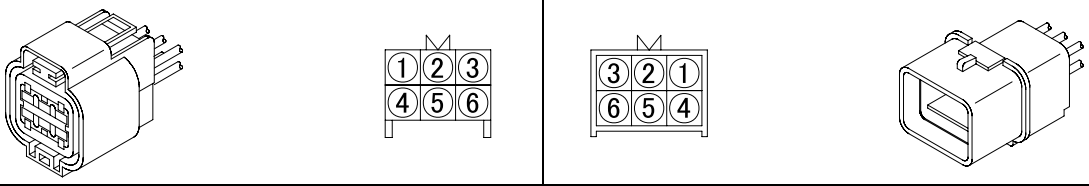	
AA8A	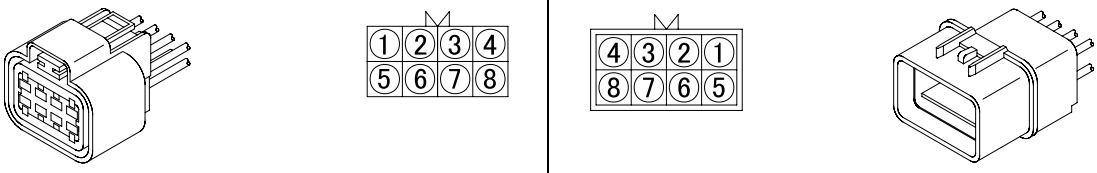	
AA10A	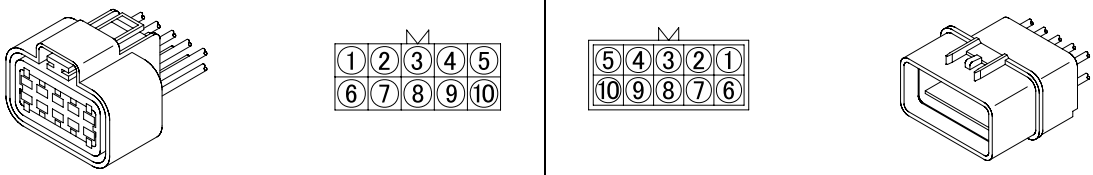	
AA12A	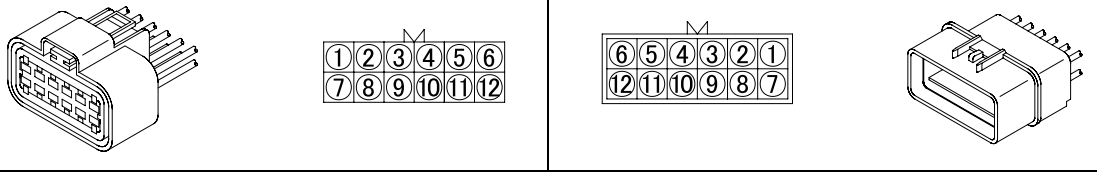	

AB type

Number shows number of pins	Female connector	Male connector
AB1A	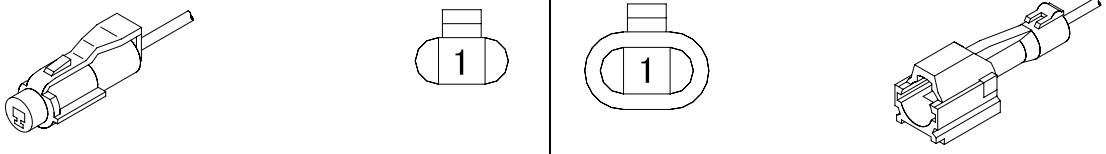	
AB2A	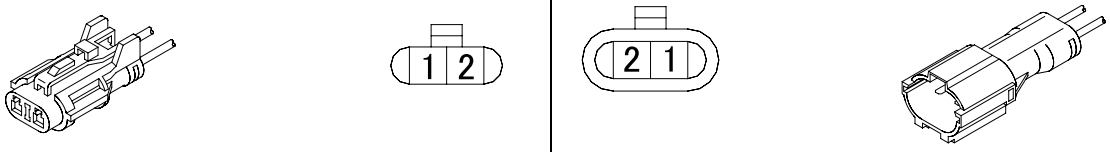	
AB2B	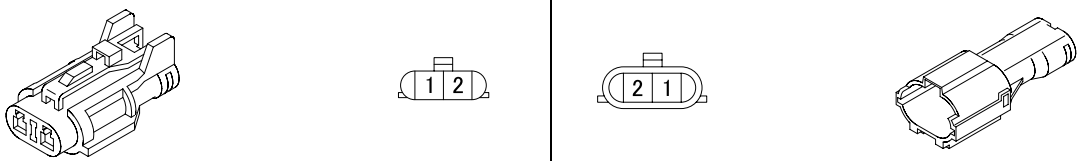	
AB2C	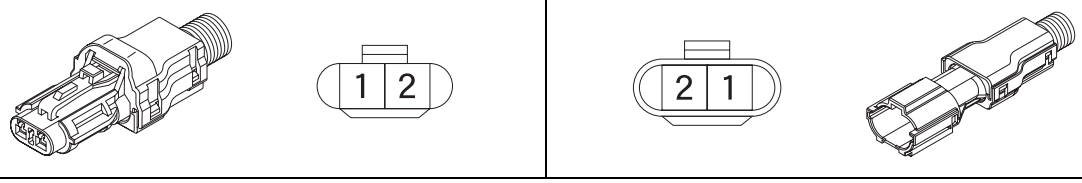	

CONNECTOR CONFIGURATION CHART

Number shows number of pins	Female connector	Male connector
AB3A	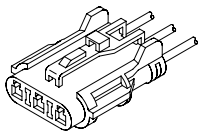 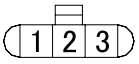	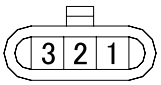 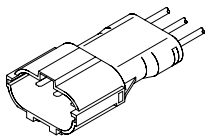
AB3B	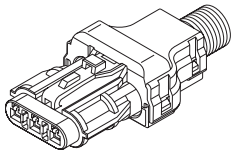 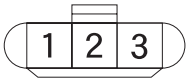	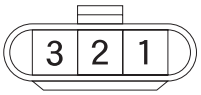 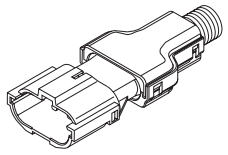
AB4A	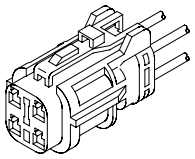 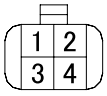	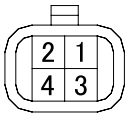 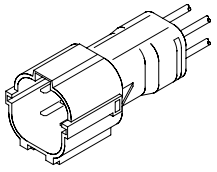
AB6A	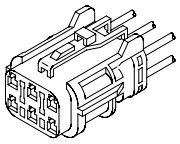 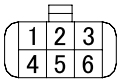	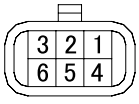 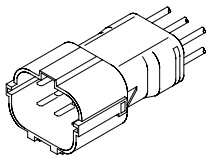
AB6B	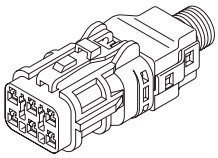 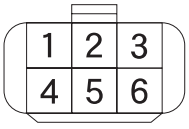	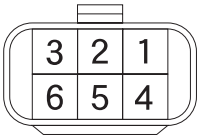 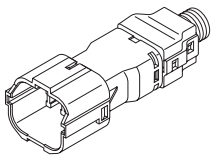
AB8A	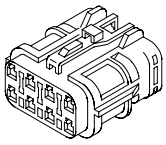 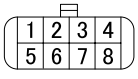	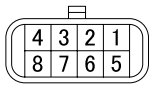 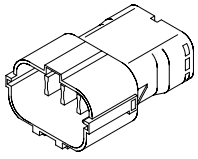
AB8B	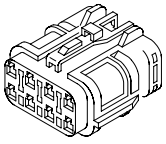 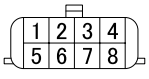	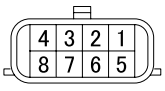 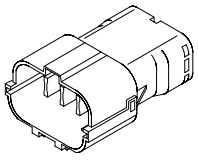
AB12A	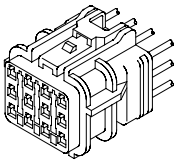 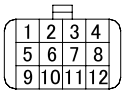	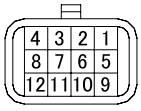 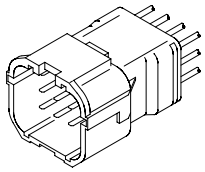 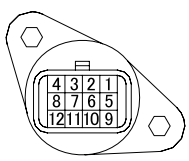 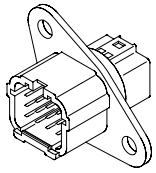

Number shows number of pins	Female connector	Male connector
AB12B	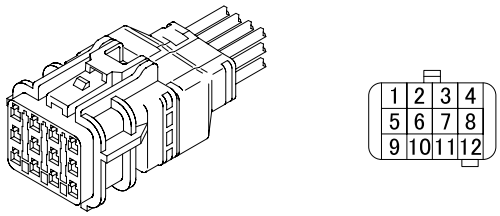	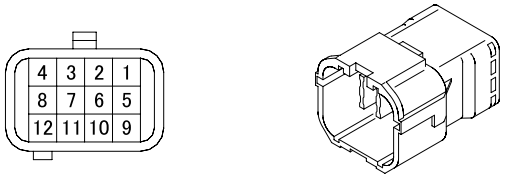
AB14A	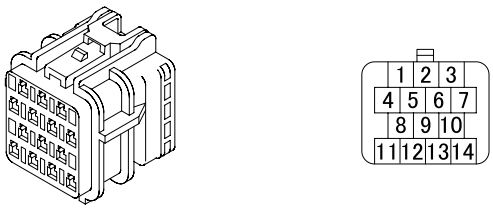	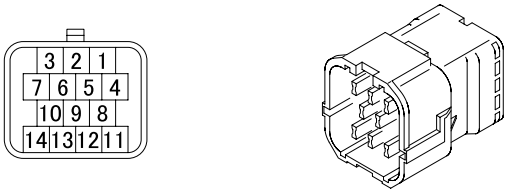
AB14B	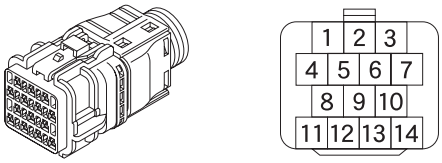	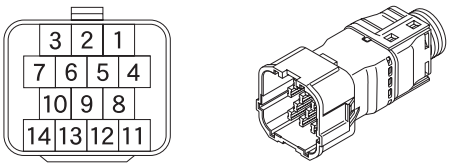
AB16A		
AB16B		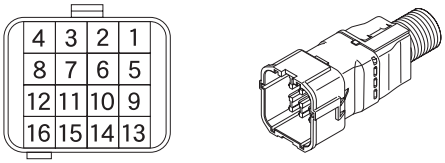
AB52A	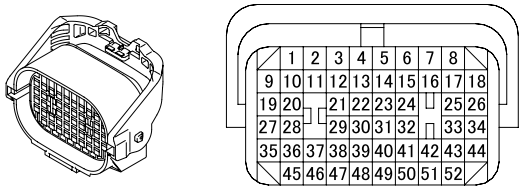	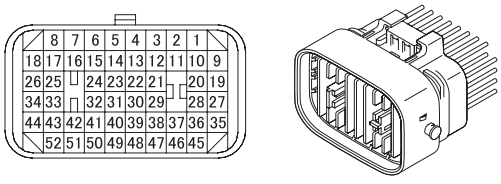
AB52B	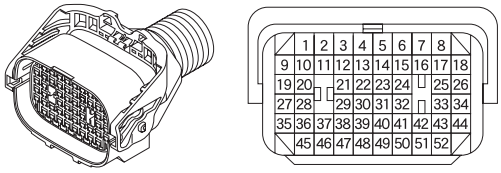	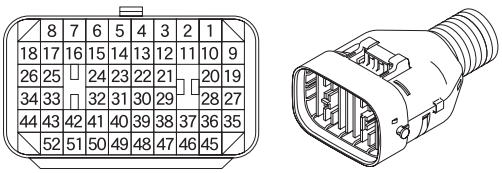

CONNECTOR CONFIGURATION CHART

AC type

Number shows number of pins	Female connector	Male connector
AC1A	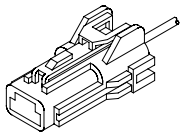	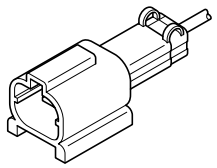
AC1B	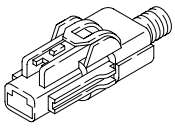	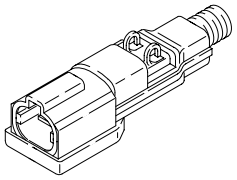
AC2A	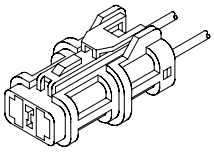	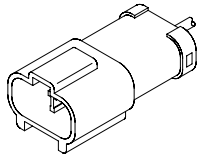
AC2B	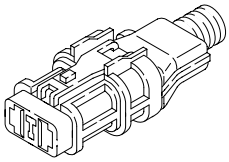	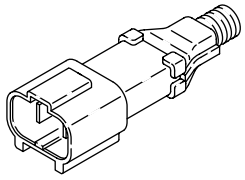
AC2C	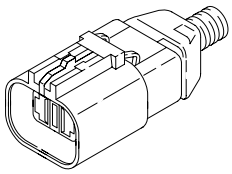	
AC2D	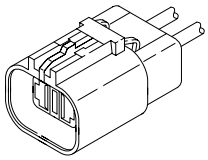	
AC3A	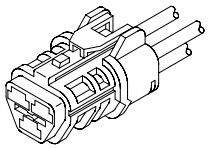	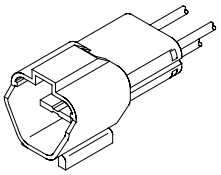
AC4A	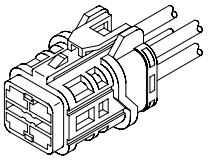 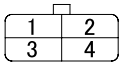	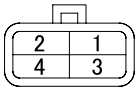 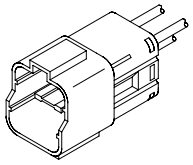
AC4B	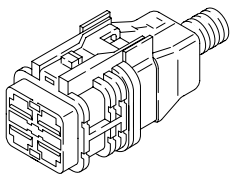	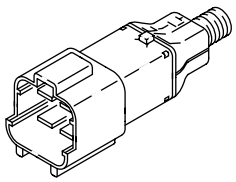

AD type

Number shows number of pins	Female connector	Male connector
AD1A	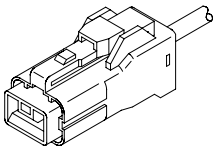	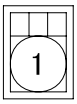 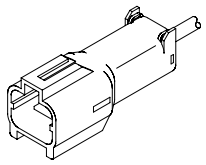
AD2A	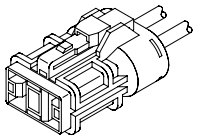 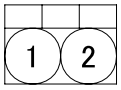	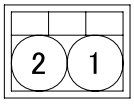 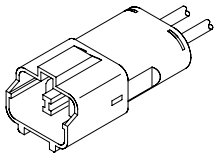
AD2B	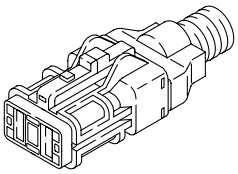	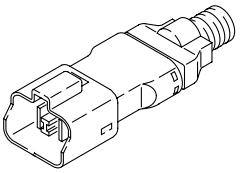

AE type

Number shows number of pins	Female connector	Male connector
AE2A	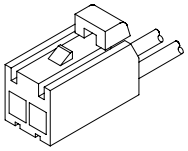	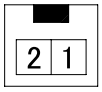 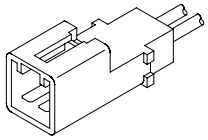
AE3A	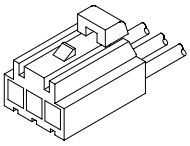 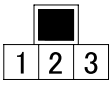	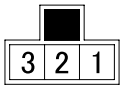 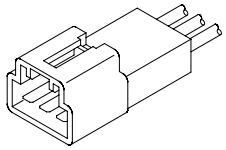
AE5A	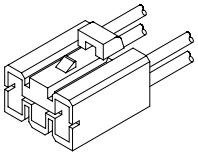 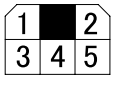	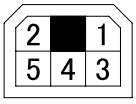 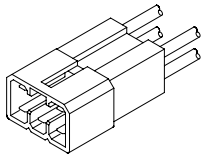
AE7A	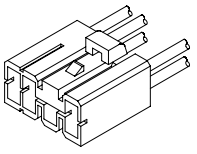 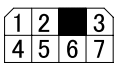	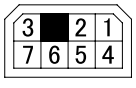 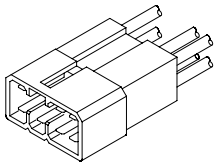
AE9A	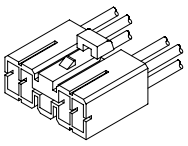 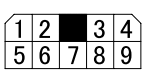	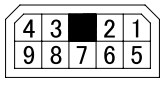 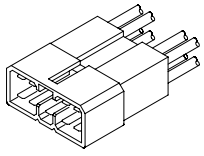

CONNECTOR CONFIGURATION CHART

Number shows number of pins	Female connector	Male connector
AE11A	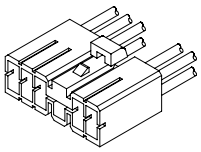 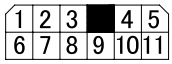	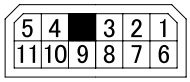 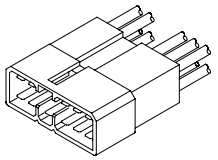
AE13A	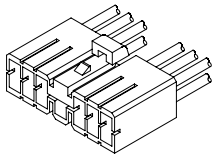 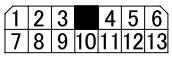	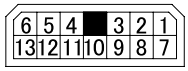 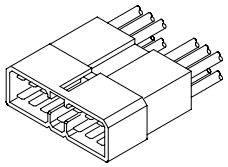
AE15A	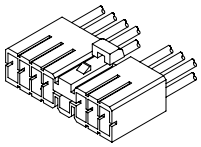 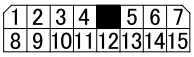	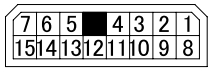 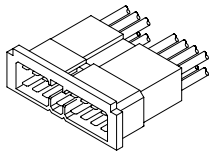
AE16A	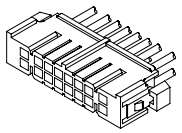 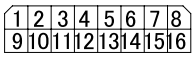	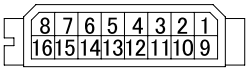 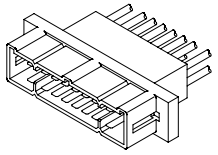
AE16B	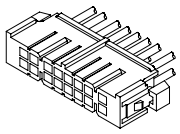 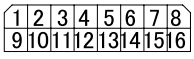	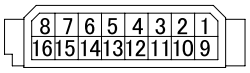 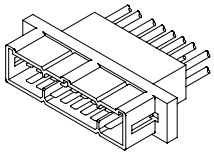
AE16C	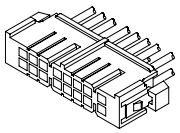 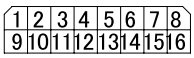	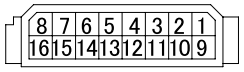 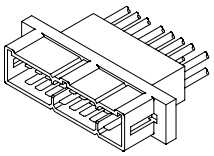
AE17A	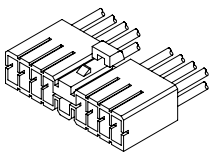 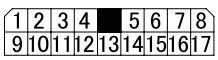	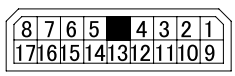 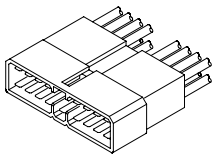

AG type

Number shows number of pins	Female connector	Male connector
AG16A	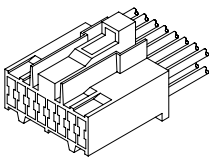 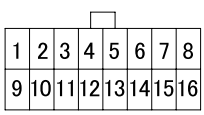	

Number shows number of pins	Female connector	Male connector
AG20A	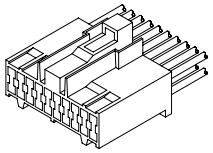 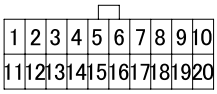	

AH type

Number shows number of pins	Female connector	Male connector
AH10A	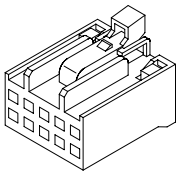 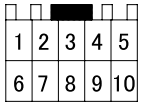	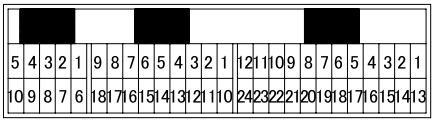 AH10A （AH18A） （AH24A） 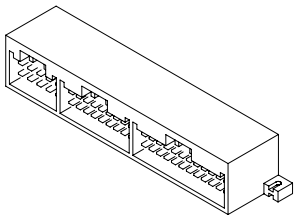
AH12A	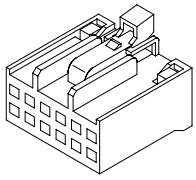 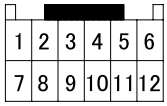	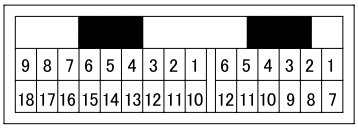 （AH18B） AH12A 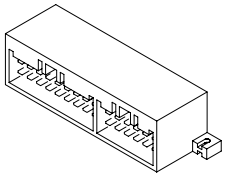
AH12B	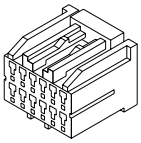 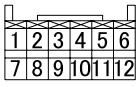	
AH16A	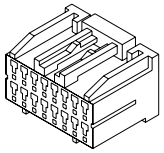 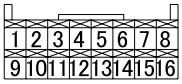	

CONNECTOR CONFIGURATION CHART

Number shows number of pins	Female connector	Male connector
AH18A	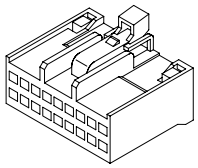 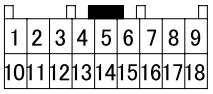 1 2 3 4 5 6 7 8 9 10 11 12 13 14 15 16 17 18	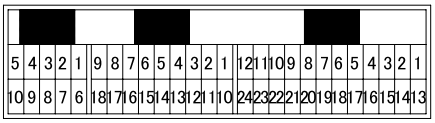 5 4 3 2 1 9 8 7 6 5 4 3 2 1 12 11 10 9 8 7 6 5 4 3 2 1 10 9 8 7 6 18 17 16 15 14 13 12 11 10 24 23 22 21 20 19 18 17 16 15 14 13 (AH10A) AH18A (AH24A) 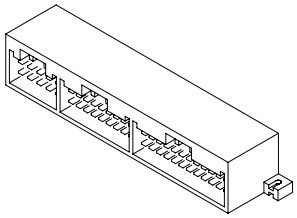
AH18B	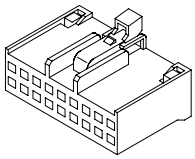 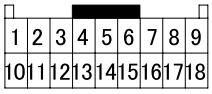 1 2 3 4 5 6 7 8 9 10 11 12 13 14 15 16 17 18	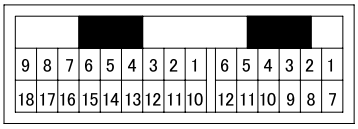 9 8 7 6 5 4 3 2 1 6 5 4 3 2 1 18 17 16 15 14 13 12 11 10 12 11 10 9 8 7 AH18B (AH12A) 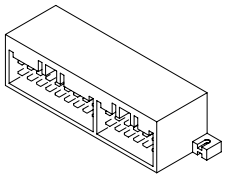
AH22A	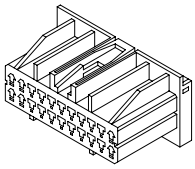 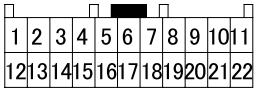 1 2 3 4 5 6 7 8 9 10 11 12 13 14 15 16 17 18 19 20 21 22	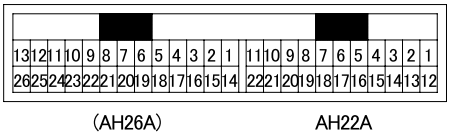 13 12 11 10 9 8 7 6 5 4 3 2 1 11 10 9 8 7 6 5 4 3 2 1 26 25 24 23 22 21 20 19 18 17 16 15 14 22 21 20 19 18 17 16 15 14 13 12 (AH26A) AH22A 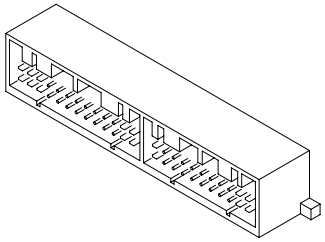
AH24A	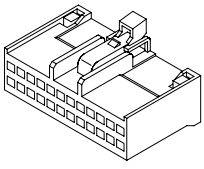 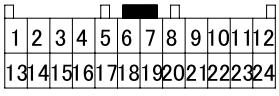 1 2 3 4 5 6 7 8 9 10 11 12 13 14 15 16 17 18 19 20 21 22 23 24	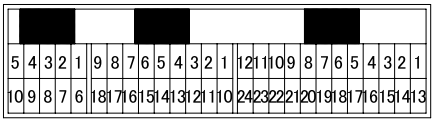 5 4 3 2 1 9 8 7 6 5 4 3 2 1 12 11 10 9 8 7 6 5 4 3 2 1 10 9 8 7 6 18 17 16 15 14 13 12 11 10 24 23 22 21 20 19 18 17 16 15 14 13 (AH10A) (AH18A) AH24A 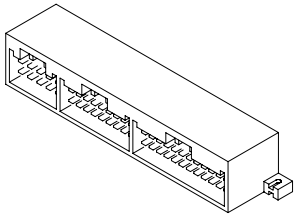

Number shows number of pins	Female connector	Male connector
AH26A	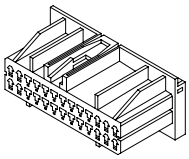 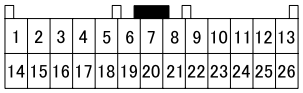 1 2 3 4 5 6 7 8 9 10 11 12 13 14 15 16 17 18 19 20 21 22 23 24 25 26	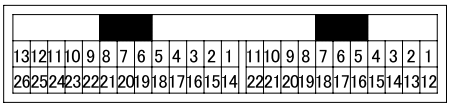 13 12 11 10 9 8 7 6 5 4 3 2 1 11 10 9 8 7 6 5 4 3 2 1 26 25 24 23 22 21 20 19 18 17 16 15 14 22 21 20 19 18 17 16 15 14 13 12 AH26A (AH22A) 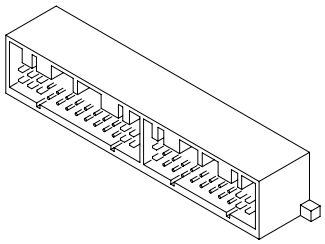

AJ type

Number shows number of pins	Female connector	Male connector
AJ2A	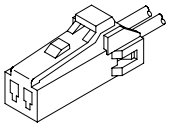 1 2	 2 1 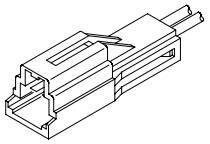
AJ4A	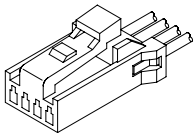 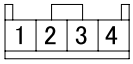 1 2 3 4	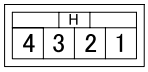 H 4 3 2 1 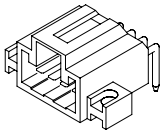
AJ8A	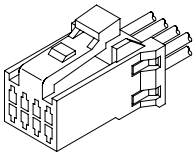 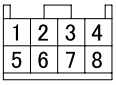 1 2 3 4 5 6 7 8	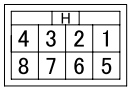 H 4 3 2 1 8 7 6 5 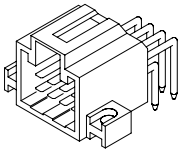
AJ10A	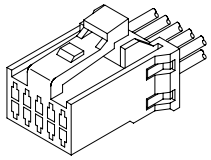 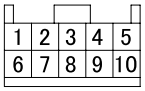 1 2 3 4 5 6 7 8 9 10	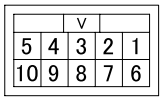 V 5 4 3 2 1 10 9 8 7 6 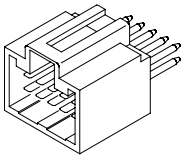 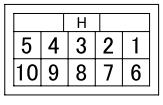 H 5 4 3 2 1 10 9 8 7 6 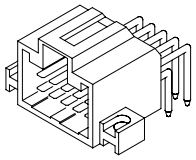

CONNECTOR CONFIGURATION CHART

Number shows number of pins	Female connector	Male connector
AJ12A	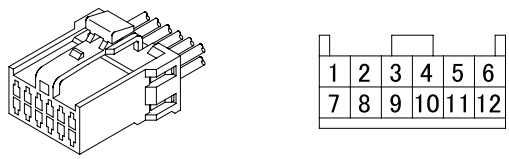	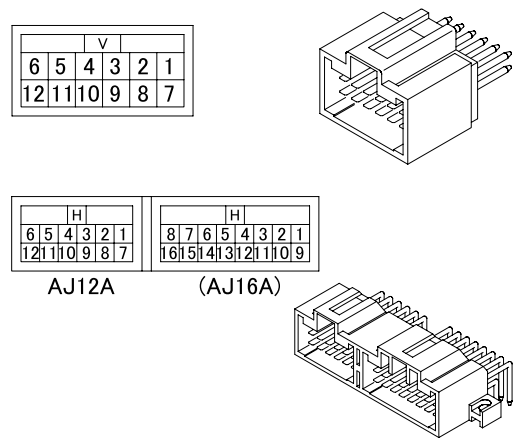
AJ16A	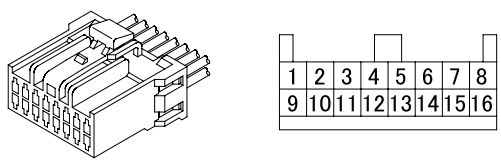	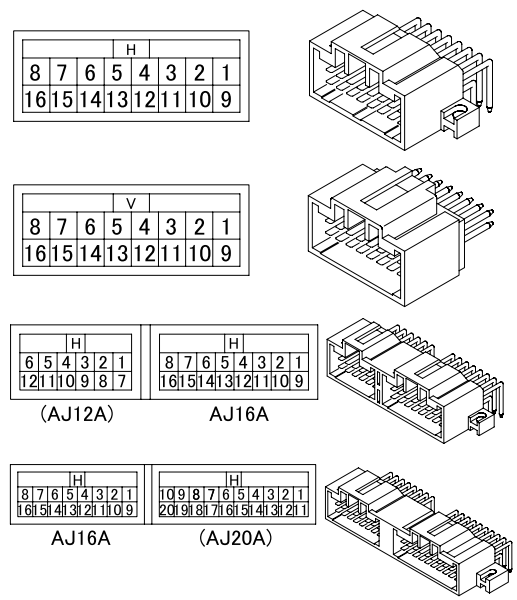
AJ20A	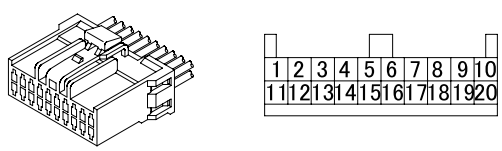	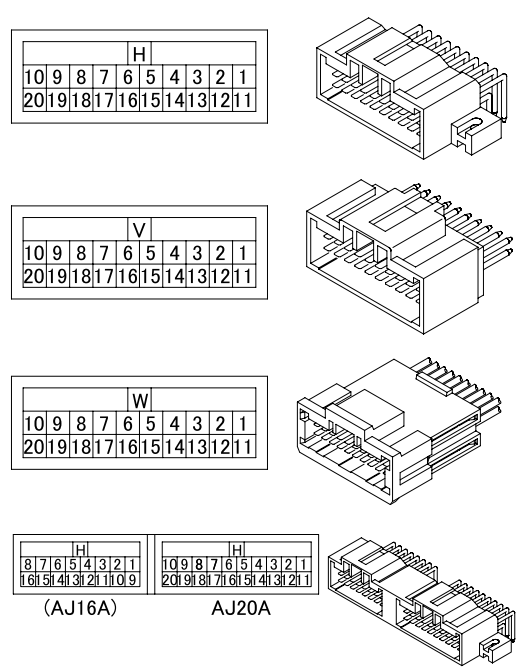

AK type

Number shows number of pins	Female connector	Male connector
AK2A	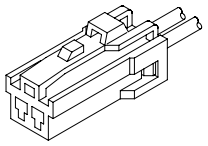	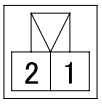 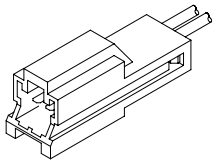
AK3A	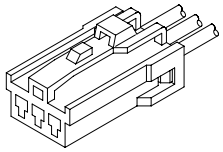 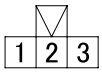	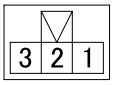 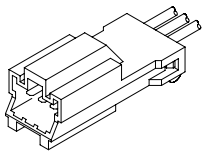
AK4A	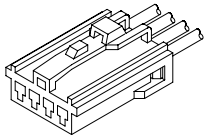 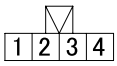	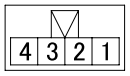 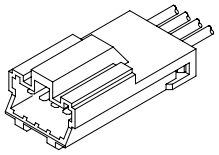
AK6A	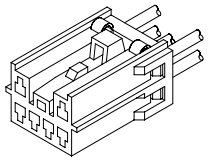 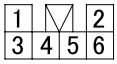	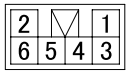 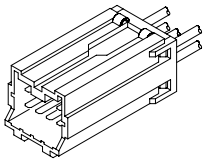
AK8A	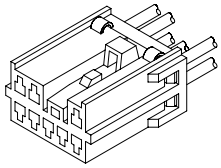 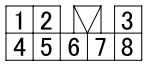	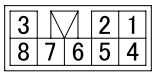 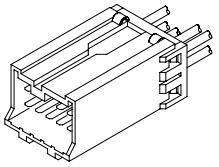
AK10A	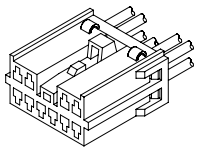 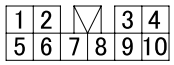	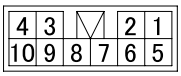 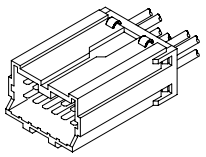 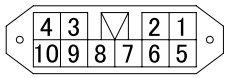 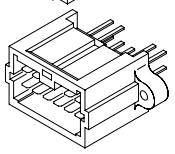
AK12A	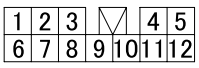	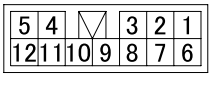

CONNECTOR CONFIGURATION CHART

Number shows number of pins	Female connector	Male connector
AK14A	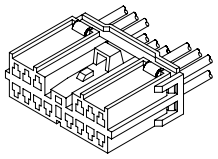 1 2 3 ▽ 4 5 6 7 8 9 10 11 12 13 14	6 5 4 ▽ 3 2 1 14 13 12 11 10 9 8 7 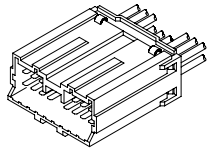 6 5 4 ▽ 3 2 1 14 13 12 11 10 9 8 7 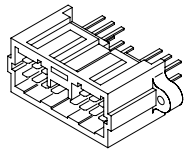
AK18A	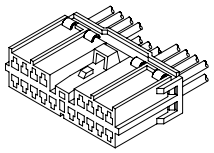 1 2 3 4 ▽ 5 6 7 8 9 10 11 12 13 14 15 16 17 18	8 7 6 5 ▽ 4 3 2 1 18 17 16 15 14 13 12 11 10 9 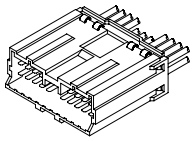 8 7 6 5 ▽ 4 3 2 1 18 17 16 15 14 13 12 11 10 9 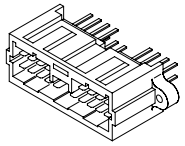
AK20A	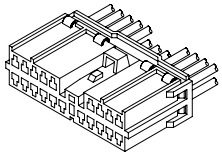 1 2 3 4 5 ▽ 6 7 8 9 10 11 12 13 14 15 16 17 18 19 20	9 8 7 6 ▽ 5 4 3 2 1 20 19 18 17 16 15 14 13 12 11 10 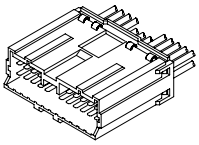 9 8 7 6 ▽ 5 4 3 2 1 20 19 18 17 16 15 14 13 12 11 10 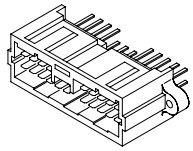
AK20B	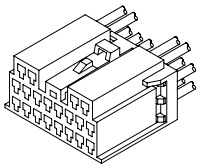 1 2 ▽ 3 4 5 6 7 8 9 10 11 12 13 14 15 16 17 18 19 20	4 3 ▽ 2 1 12 11 10 9 8 7 6 5 20 19 18 17 16 15 14 13 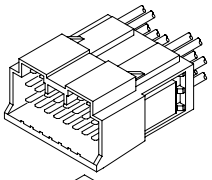 4 3 ▽ 2 1 12 11 10 9 8 7 6 5 20 19 18 17 16 15 14 13 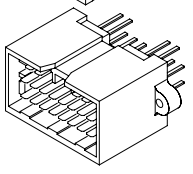
AK22A	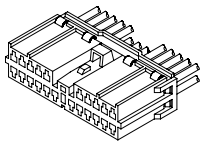 1 2 3 4 5 ▽ 6 7 8 9 10 11 12 13 14 15 16 17 18 19 20 21 22	10 9 8 7 6 ▽ 5 4 3 2 1 22 21 20 19 18 17 16 15 14 13 12 11 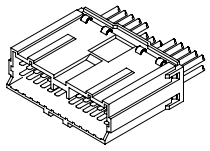 10 9 8 7 6 ▽ 5 4 3 2 1 22 21 20 19 18 17 16 15 14 13 12 11 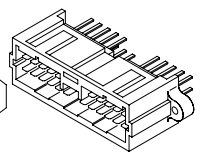

Number shows number of pins	Female connector	Male connector
AK22B	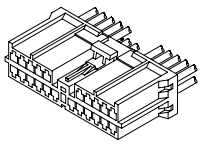 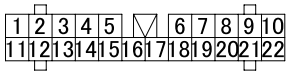	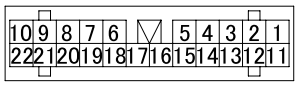 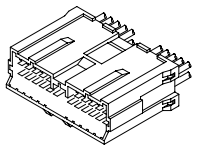

AL type

Number shows number of pins	Female connector	Male connector
AL1A	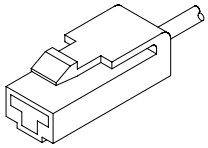 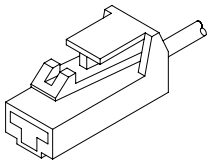	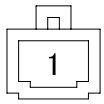 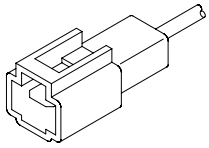 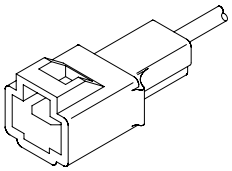
AL2A	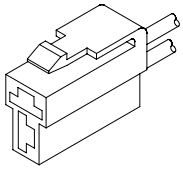 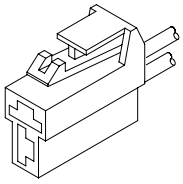	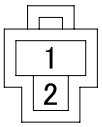 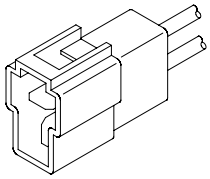 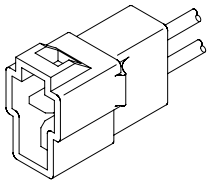
AL2B	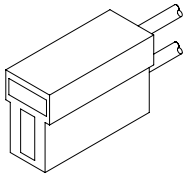	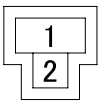 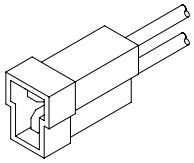
AL3A	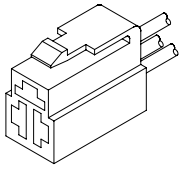 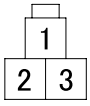 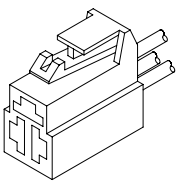	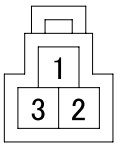 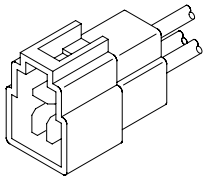 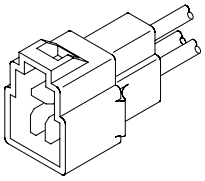

CONNECTOR CONFIGURATION CHART

Number shows number of pins	Female connector	Male connector
AL3B	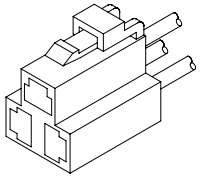	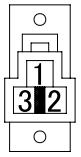 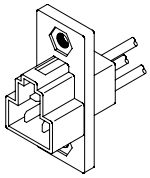
AL3C	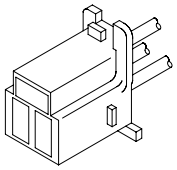	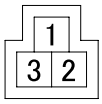 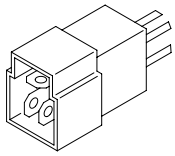
AL3D	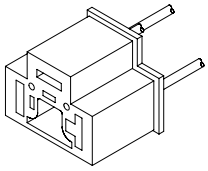 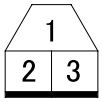 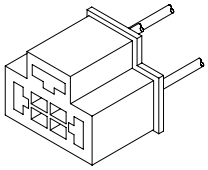	
AL3E	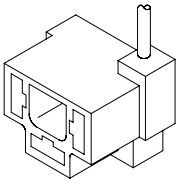 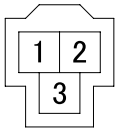 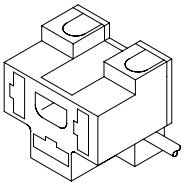	
AL4A	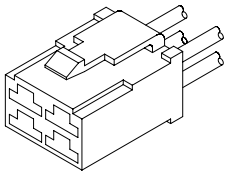 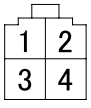 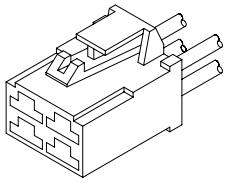	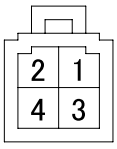 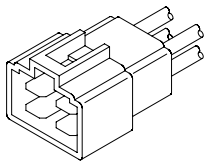 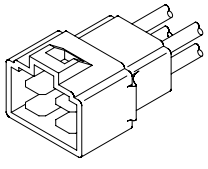

Number shows number of pins	Female connector	Male connector
AL4B	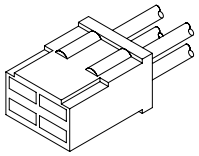	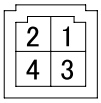 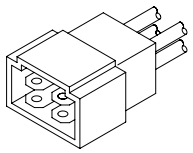
AL6A	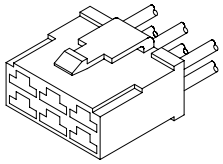 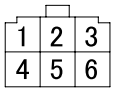 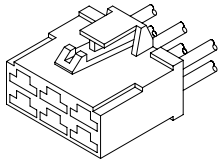	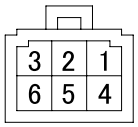 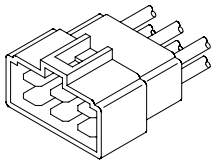 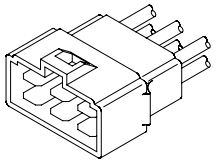
AL6B	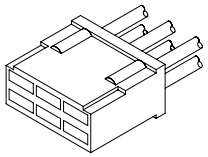 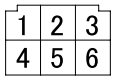	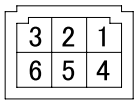 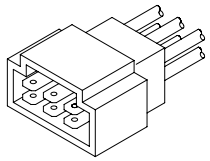
AL8A	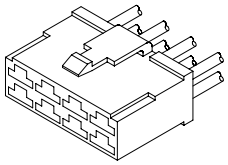 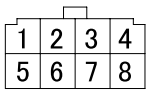 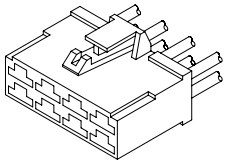	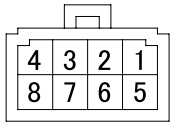 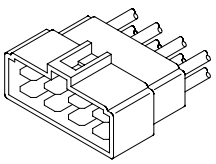 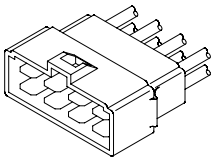
AL8B	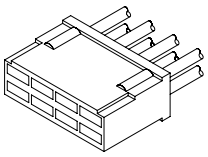 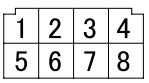	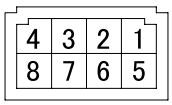 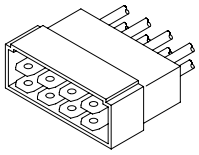

CONNECTOR CONFIGURATION CHART

AM type

Number shows number of pins	Female connector	Male connector
AM1A	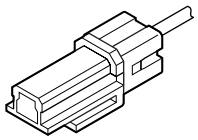	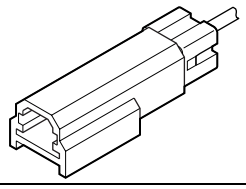
AM1B	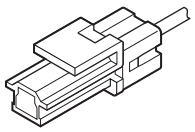	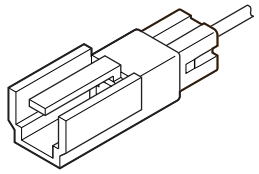
AM2A	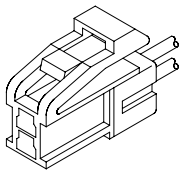 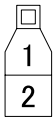	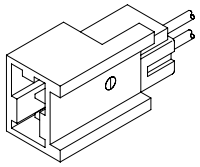
AM2B	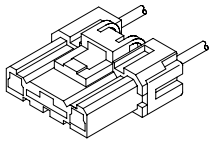	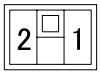 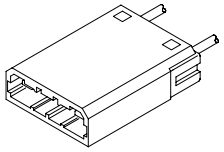
AM2C	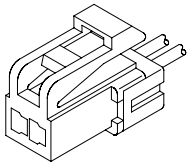	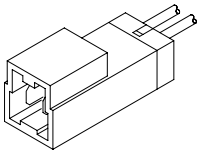
AM4A	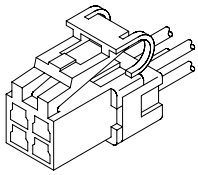 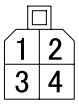	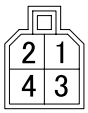 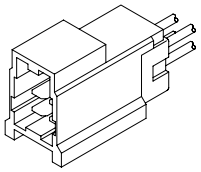
AM4B	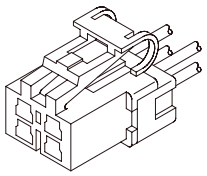 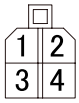	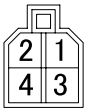 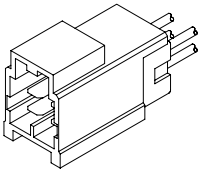
AM6A	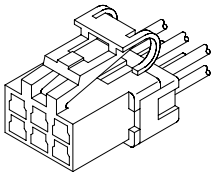 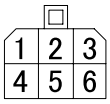	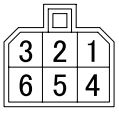 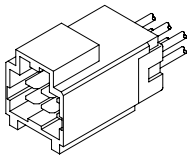
AM6B	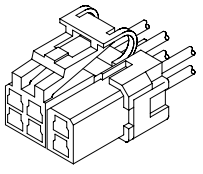 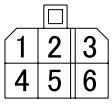	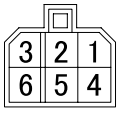 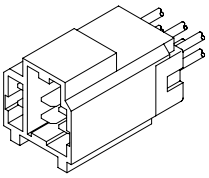

Number shows number of pins	Female connector	Male connector
AM8A	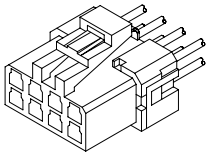 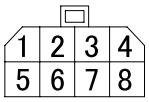	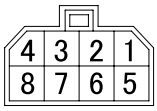 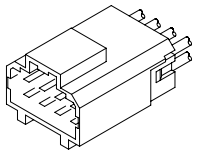
AM8B	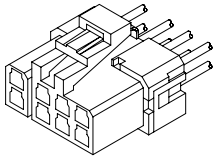 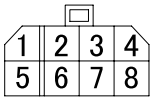	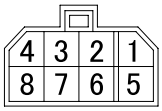 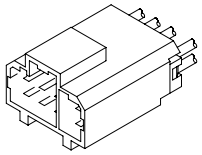
AM10A	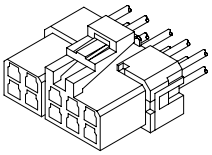 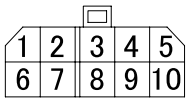	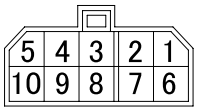 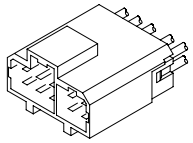
AM10B	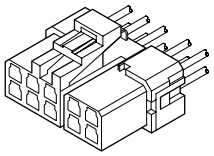 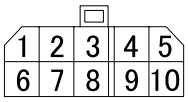	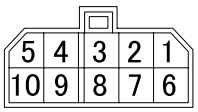 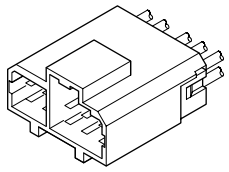

AN type

Number shows number of pins	Female connector	Male connector
AN1A	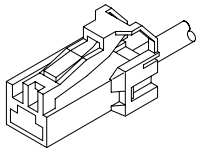	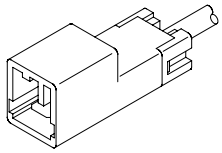
AN2A	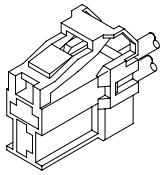	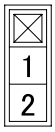 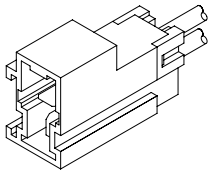
AN2B	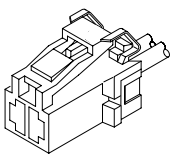	
AN3A	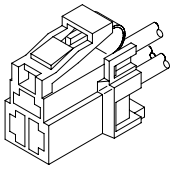 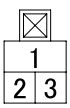	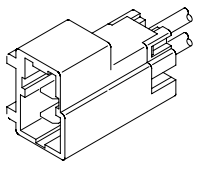

CONNECTOR CONFIGURATION CHART

Number shows number of pins	Female connector	Male connector
AN4A	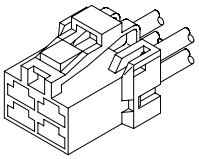 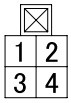	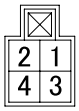 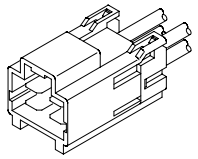
AN4B	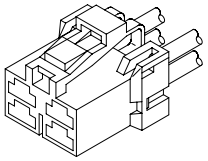 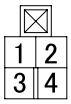	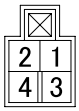 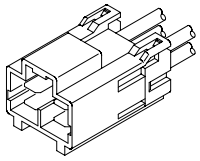
AN6A	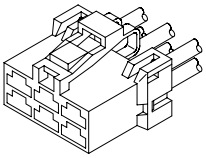 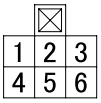	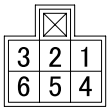 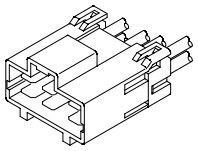
AN6B	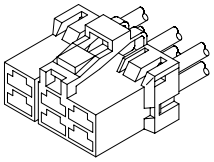 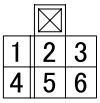	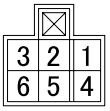 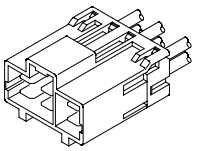
AN8A	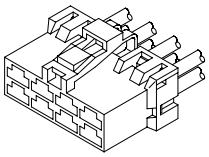 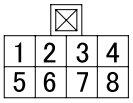	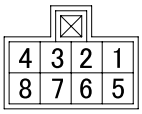 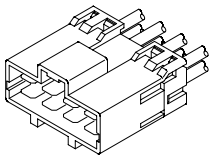
AN8B	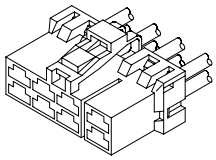 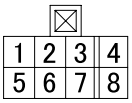	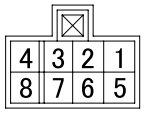 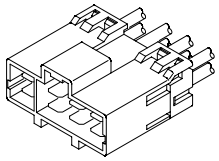

AP type

Number shows number of pins	Female connector	Male connector
AP1A	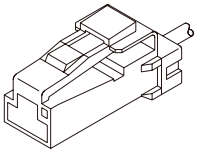 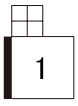	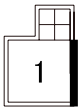 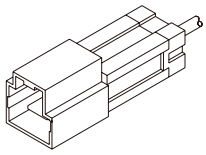
AP1B	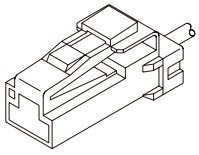 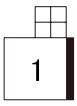	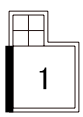 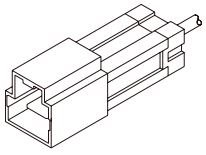

Number shows number of pins	Female connector	Male connector
AP2A	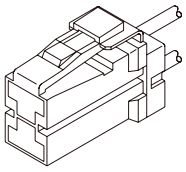	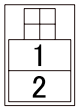 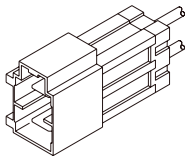
AP2B	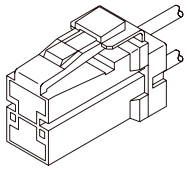 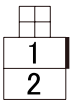	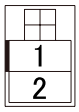 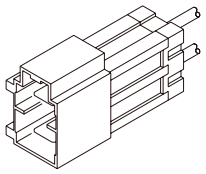
AP2C	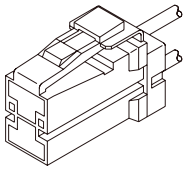 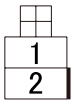	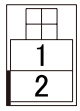 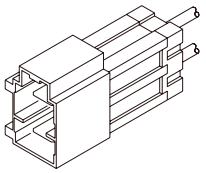

AQ type

Number shows number of pins	Female connector	Male connector
AQ1A		
AQ3A	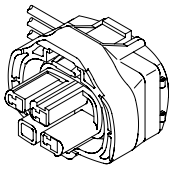 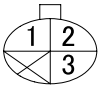	
AQ3B	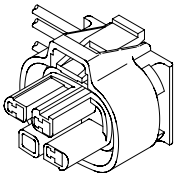 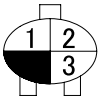	
AQ5A	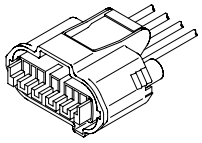 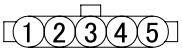	
AQ6A	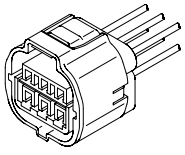 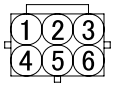	

CONNECTOR CONFIGURATION CHART

Number shows number of pins	Female connector	Male connector
AQ8A	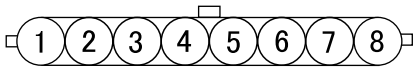	
AQ12A	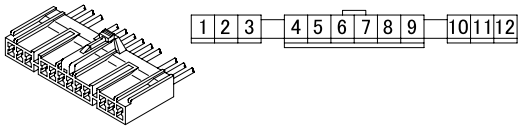	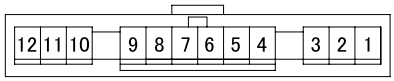

AR type

Number shows number of pins	Female connector	Male connector
AR2A		
AR2B	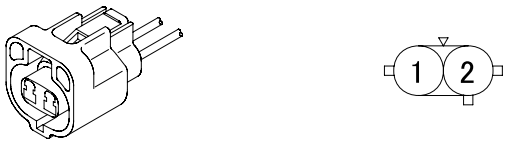	
AR2C	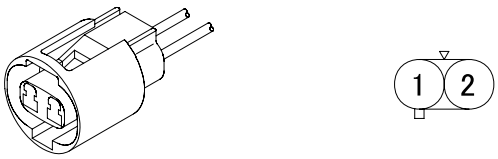	
AR2D	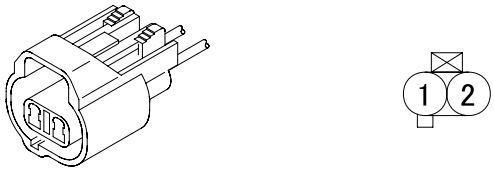	
AR2E	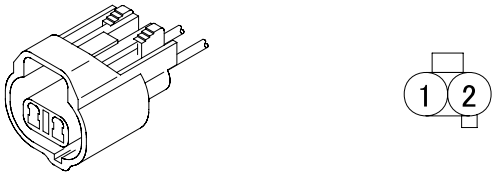	
AR2F	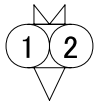	

Number shows number of pins	Female connector	Male connector
AR2G	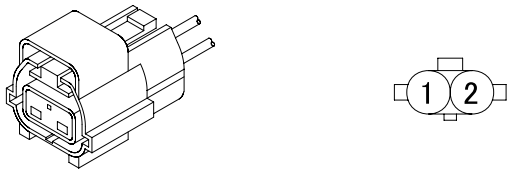	
AR2H	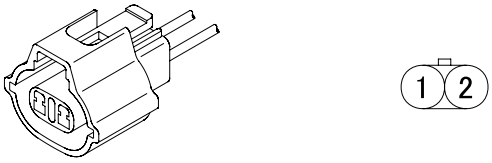	
AR3A	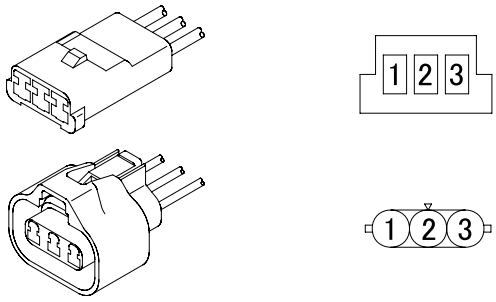	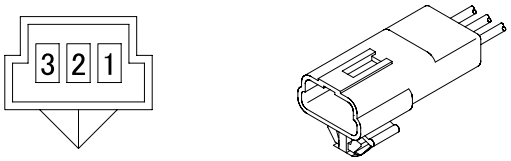

AS type

Number shows number of pins	Female connector	Male connector
AS1A	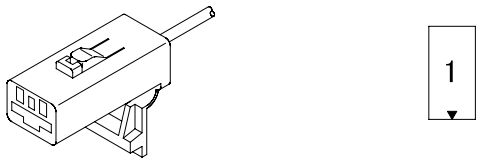	
AS2A	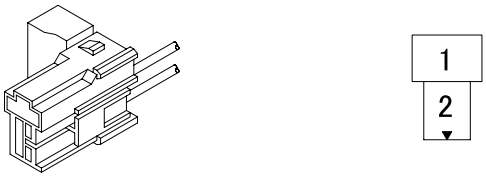	
AS2B	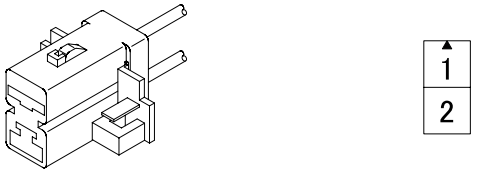	

AT type

Number shows number of pins	Female connector	Male connector
AT4A	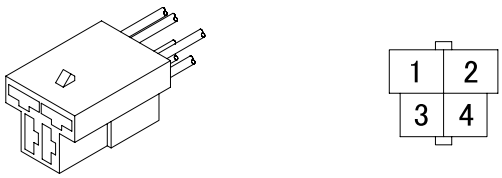	

CONNECTOR CONFIGURATION CHART

AU type

Number shows number of pins	Female connector	Male connector
AU2A		
AU6A	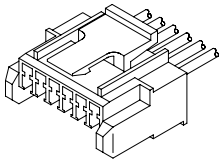 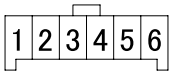	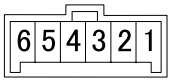
AU8A	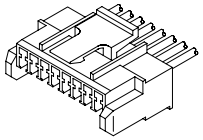 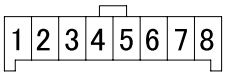	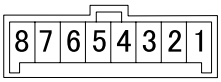
AU10A	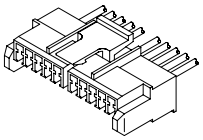 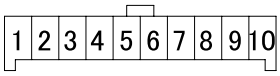	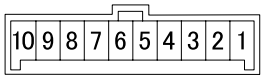
AU12A	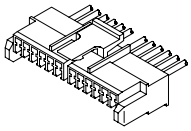 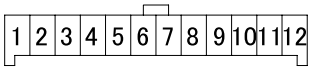	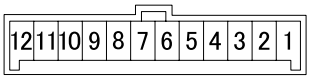
AU13A	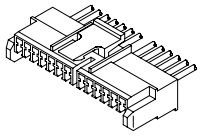 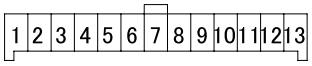	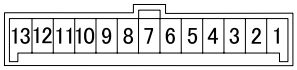
AU16A	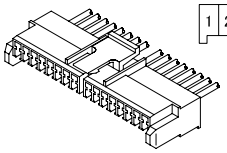 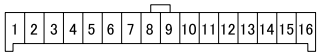	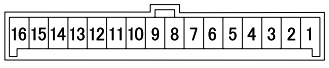
AU16B	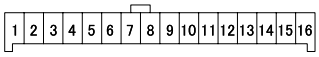	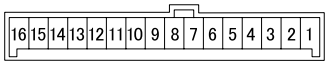
AU16C	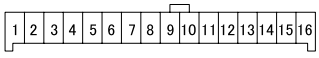	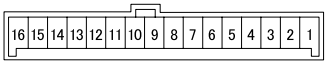

AV type

Number shows number of pins	Female connector	Male connector
AV1A	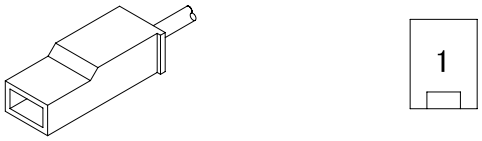	
AV2A		

AW type

Number shows number of pins	Female connector	Male connector
AW1A	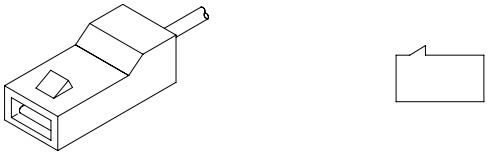	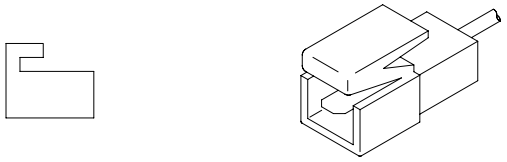
AW1B	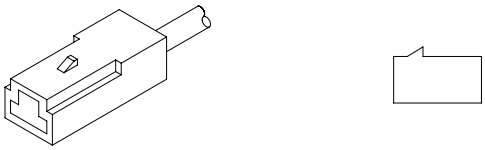	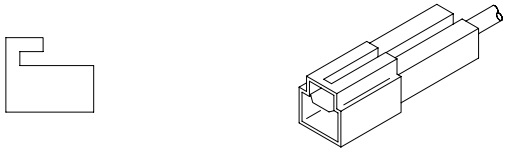
AW1C	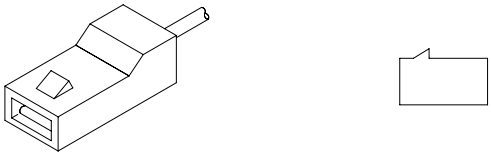	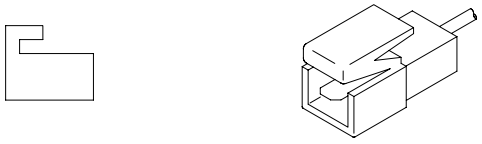
AW2A	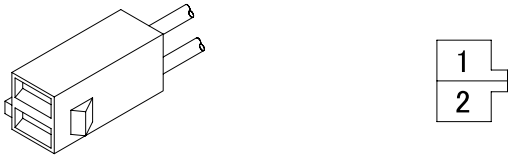	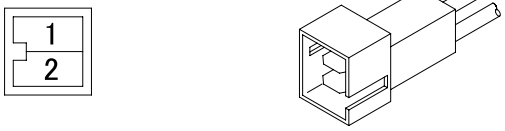

AX type

Number shows number of pins	Female connector	Male connector
AX2A	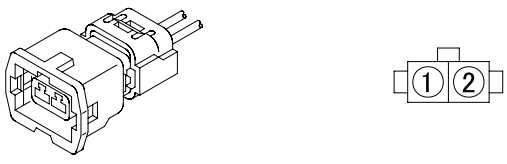	

CONNECTOR CONFIGURATION CHART

Number shows number of pins	Female connector	Male connector
AX3A	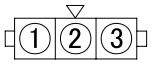	
AX4A	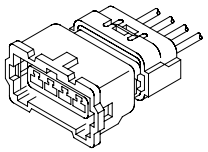 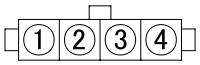	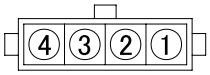 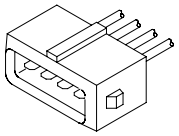

AY type

Number shows number of pins	Female connector	Male connector
AY2A	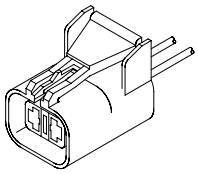 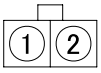	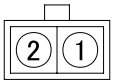 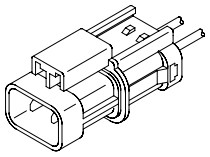

AZ type

Number shows number of pins	Female connector	Male connector
AZ2A	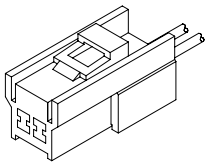 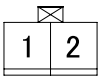	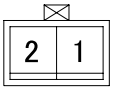 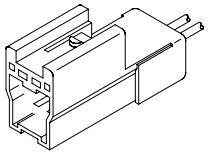

BA type

Number shows number of pins	Female connector	Male connector
BA3A	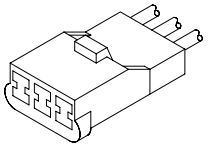 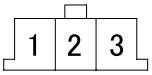	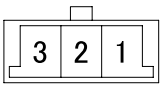 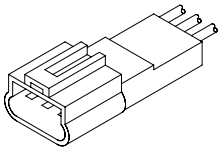

BB type

Number shows number of pins	Female connector	Male connector
BB2A	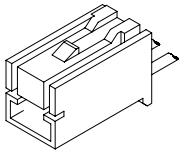	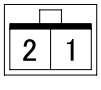

Number shows number of pins	Female connector	Male connector
BB3A	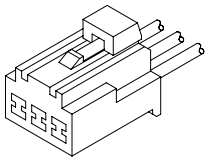 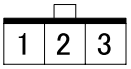	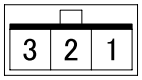 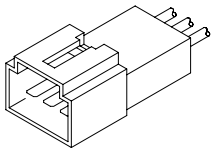

BC type

Number shows number of pins	Female connector	Male connector
BC3A	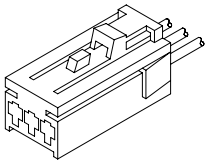 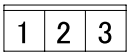	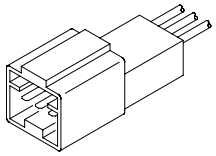

BD type

Number shows number of pins	Female connector	Male connector
BD6A	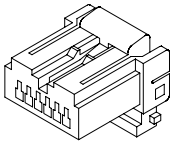	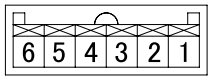 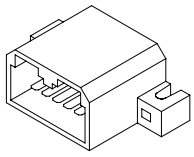
BD8A	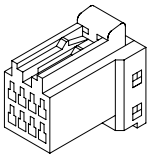 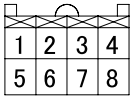	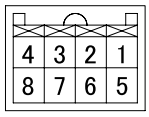 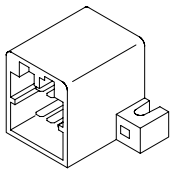
BD12A	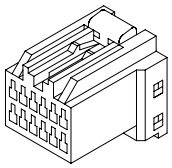 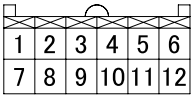	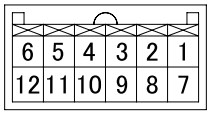 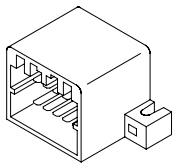
BD16A	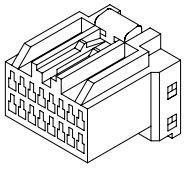 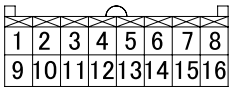	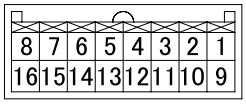 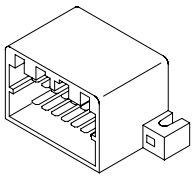
BD20A	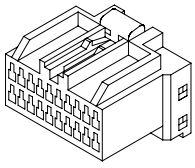 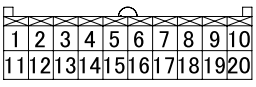	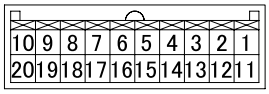 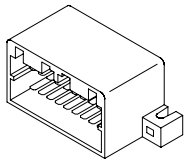

CONNECTOR CONFIGURATION CHART

BE type

Number shows number of pins	Female connector	Male connector
BE6A	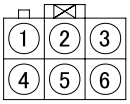	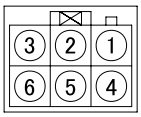

BF type

Number shows number of pins	Female connector	Male connector
BF6A	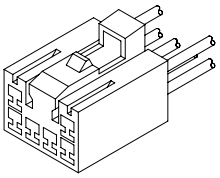 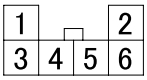	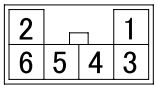 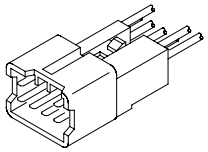
BF8A	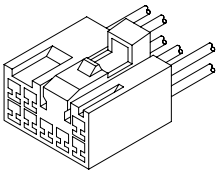 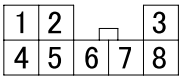	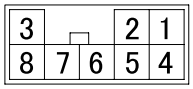 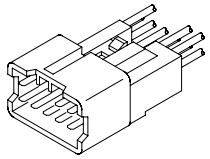
BF10A	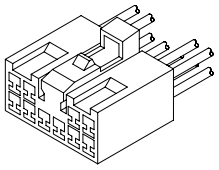 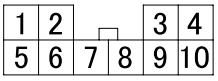	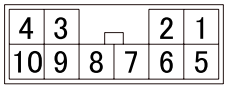 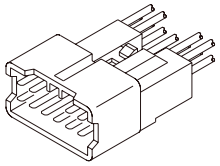
BF12A	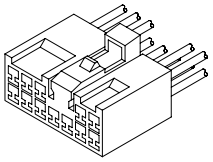 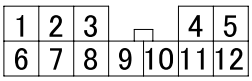	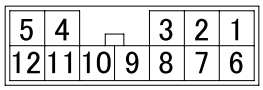 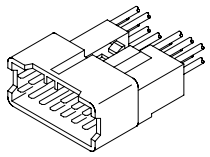

BG type

Number shows number of pins	Female connector	Male connector
BG10A	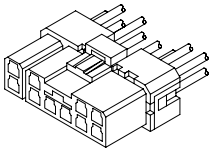 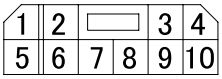	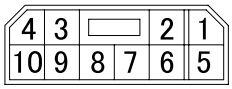 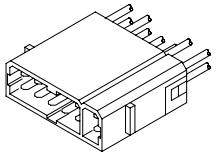
BG12A	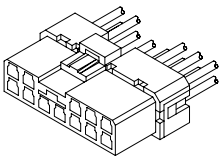 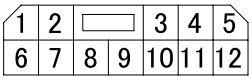	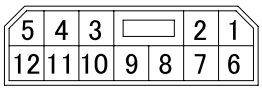 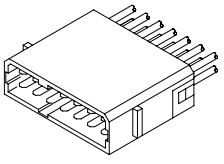

Number shows number of pins	Female connector	Male connector
BG16A	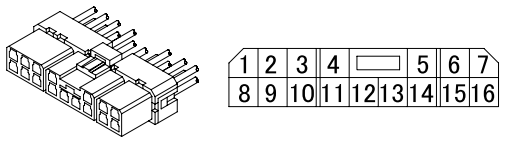	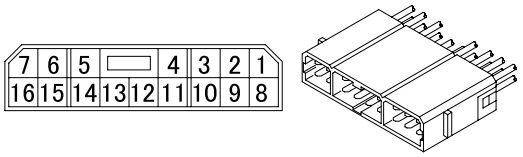

BJ type

Number shows number of pins	Female connector	Male connector
BJ5A	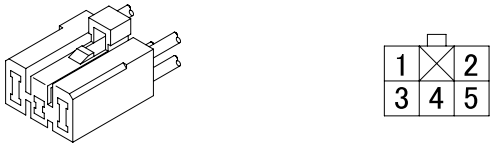	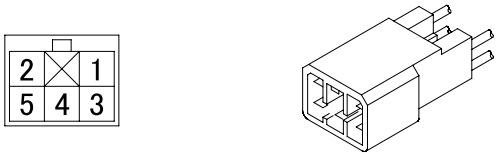
BJ7A	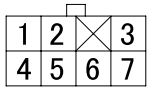	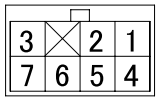
BJ9A	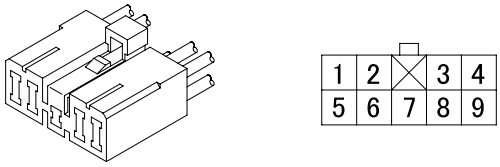	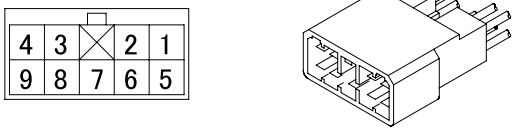

BM type

Number shows number of pins	Female connector	Male connector
BM2A	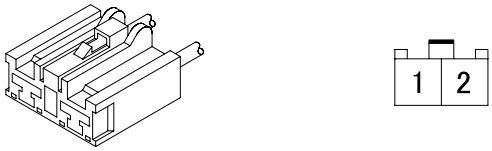	
BM2B	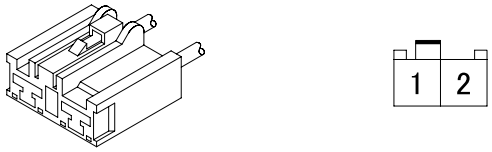	
BM2C	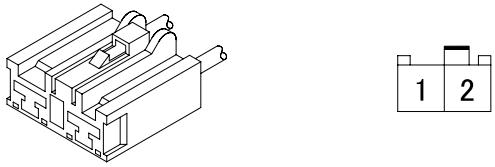	

CONNECTOR CONFIGURATION CHART

Number shows number of pins	Female connector	Male connector
BM3A	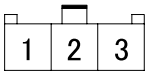	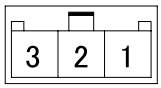
BM4A	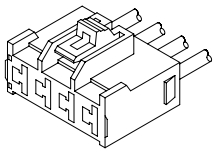 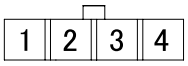	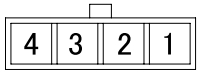 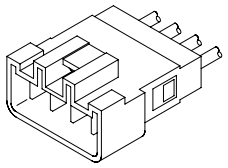

BN type

Number shows number of pins	Female connector	Male connector
BN1A	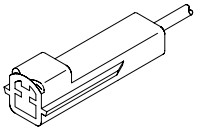	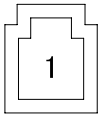 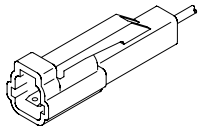

BQ type

Number shows number of pins	Female connector	Male connector
BQ1A	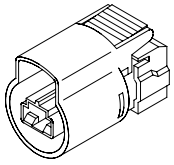	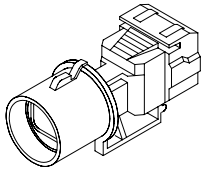
BQ2A	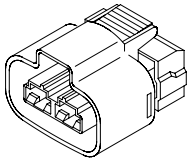 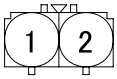	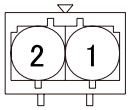 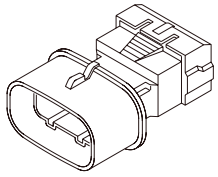
BQ3A	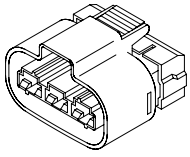 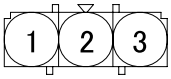	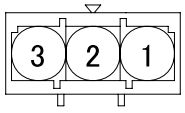 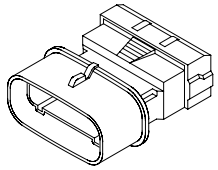
BQ3B	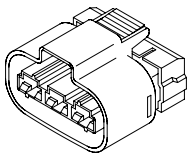 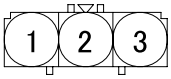	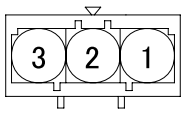 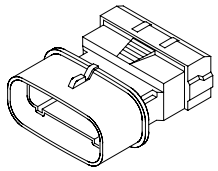

BR type

Number shows number of pins	Female connector	Male connector
BR1A	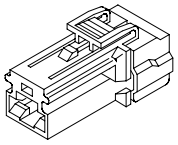	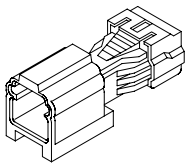
BR2A	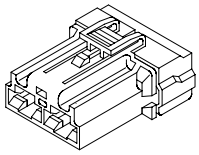 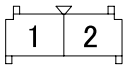	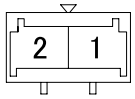 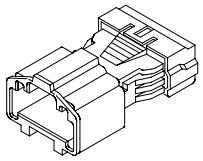
BR4A	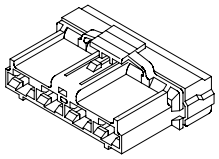 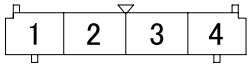	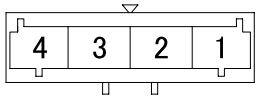 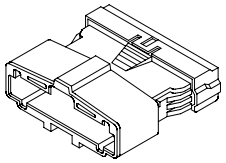
BR4B	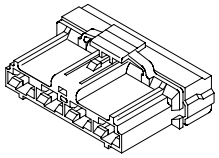 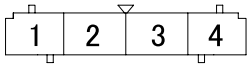	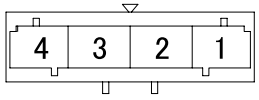 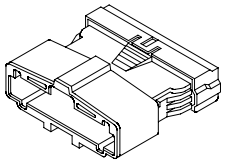

BS type

Number shows number of pins	Female connector	Male connector
BS1A	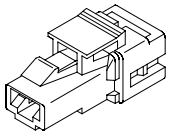	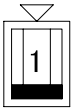 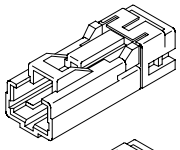 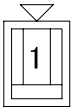 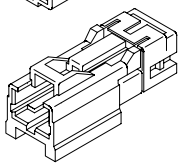
BS2A	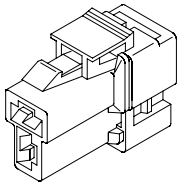 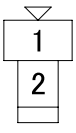	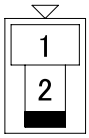 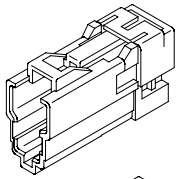 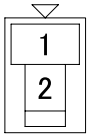 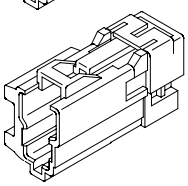

CONNECTOR CONFIGURATION CHART

Number shows number of pins	Female connector	Male connector
BS3A	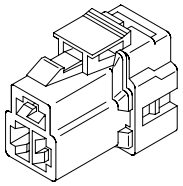 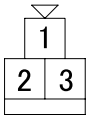	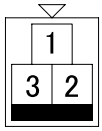 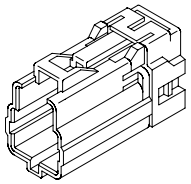 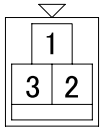 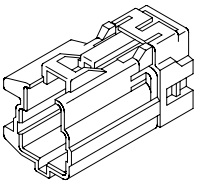
BS4A	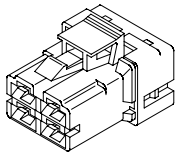 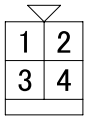	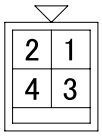 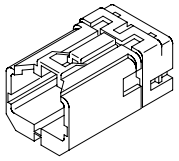
BS6A	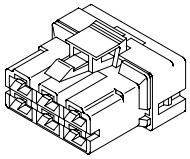 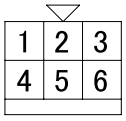	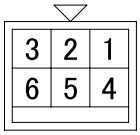 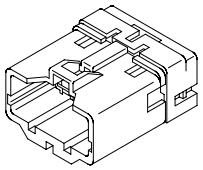
BS8A	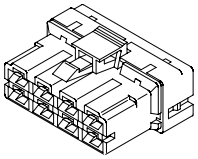 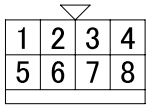	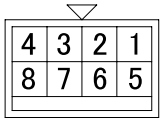 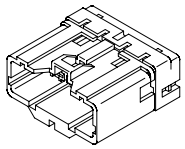

BT type

Number shows number of pins	Female connector	Male connector
BT2A	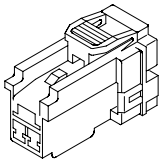	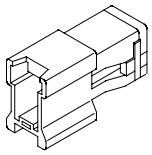
BT3A	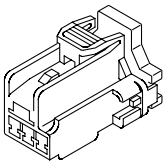 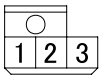	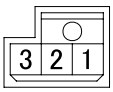 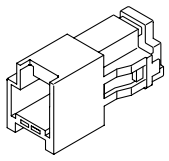
BT4A	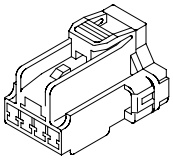 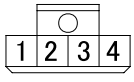	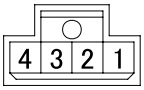 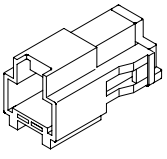

Number shows number of pins	Female connector	Male connector
BT6A	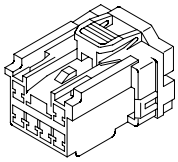 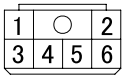	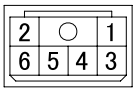 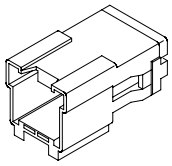
BT8A	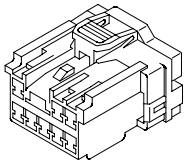 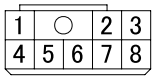	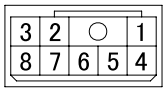 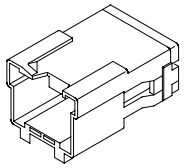
BT10A	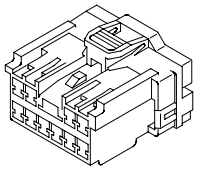 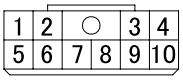	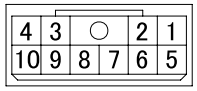 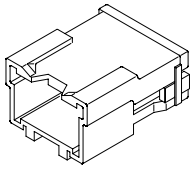
BT12A	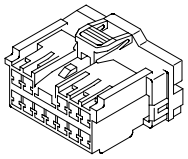 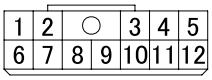	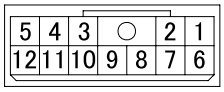 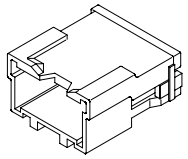
BT16A	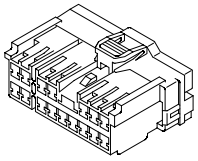 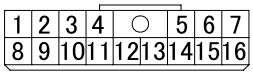	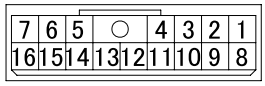 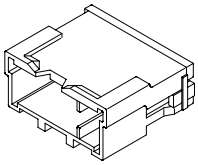
BT16B	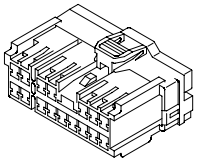 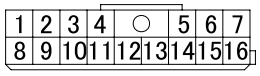	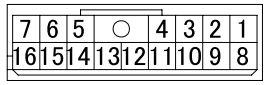 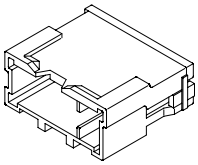
BT16C	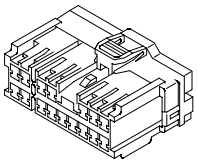 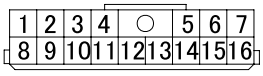	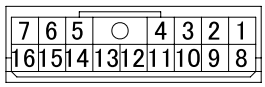 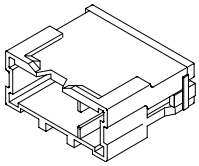
BT20A	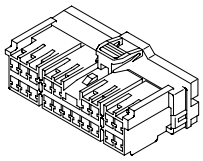 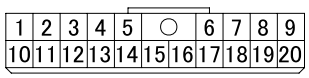	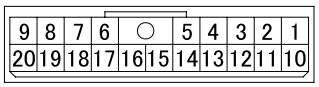 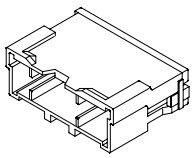
BT20B	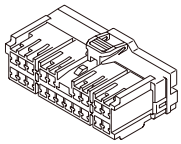 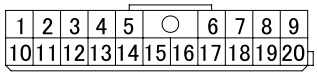	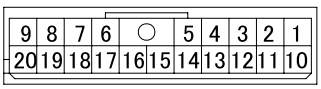 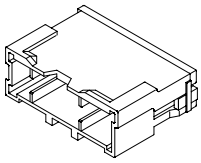

CONNECTOR CONFIGURATION CHART

Number shows number of pins	Female connector	Male connector
BT20C	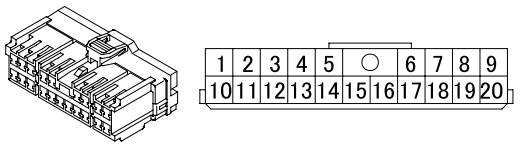	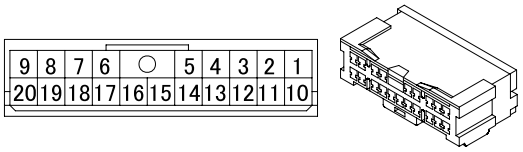

BU type

Number shows number of pins	Female connector	Male connector
BU4A		
BU6A		

BW type

Number shows number of pins	Female connector	Male connector
BW2A	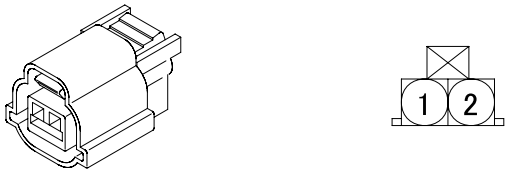	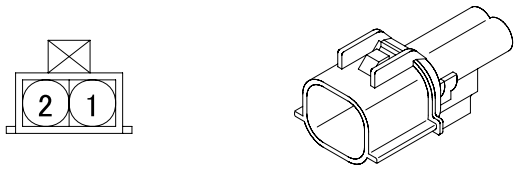
BW2B	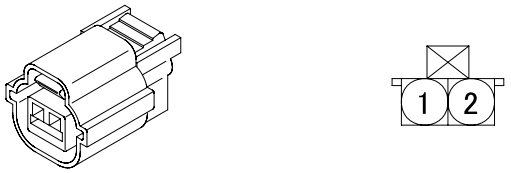	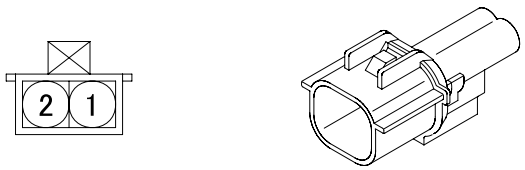
BW3A	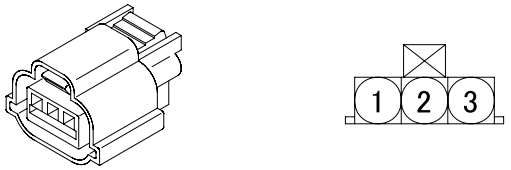	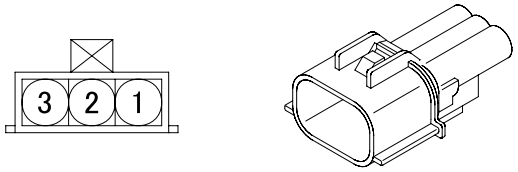
BW3B	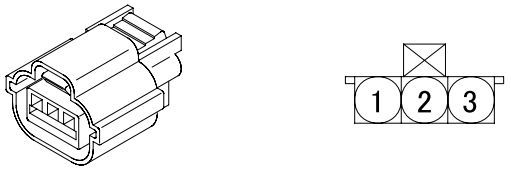	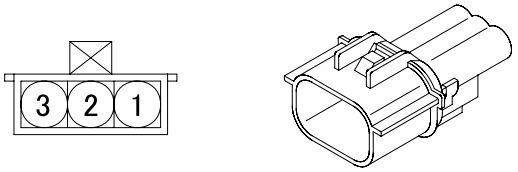

Number shows number of pins	Female connector	Male connector
BW4A	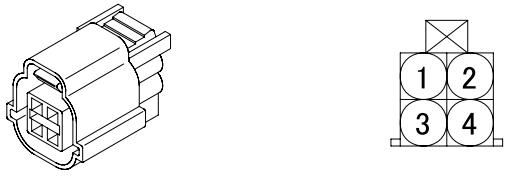	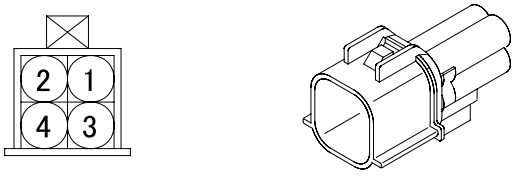
BW4B	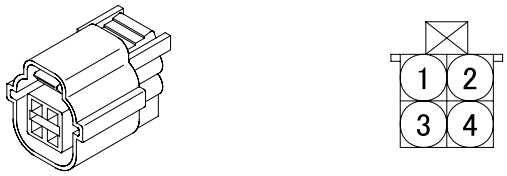	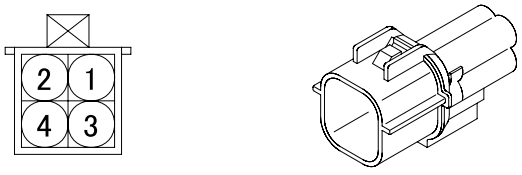
BW6A	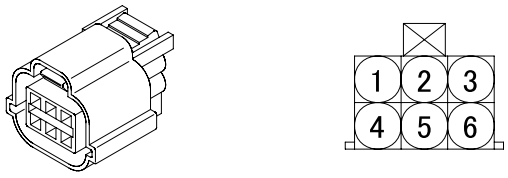	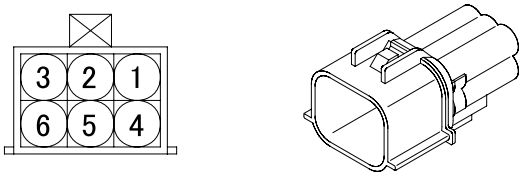
BW6B	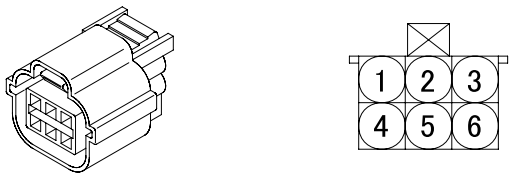	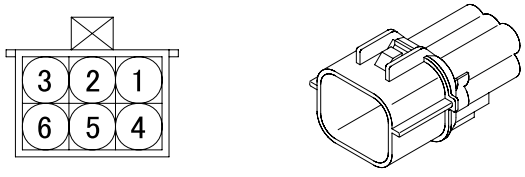
BW8A	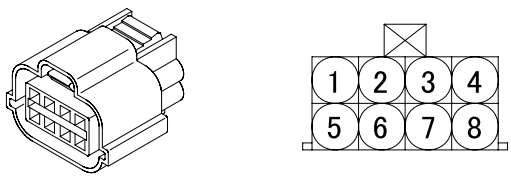	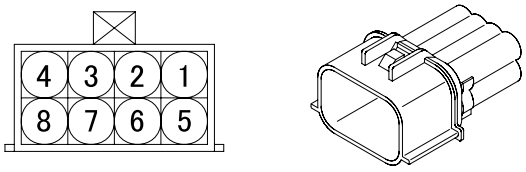
BW10A	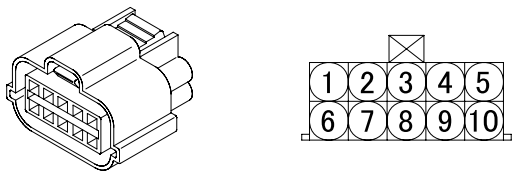	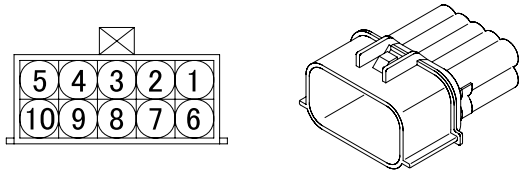

BX type

Number shows number of pins	Female connector	Male connector
BX2A	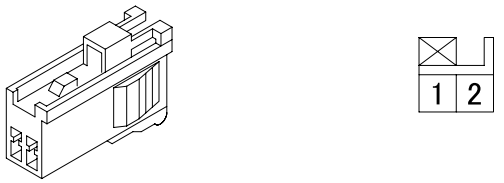	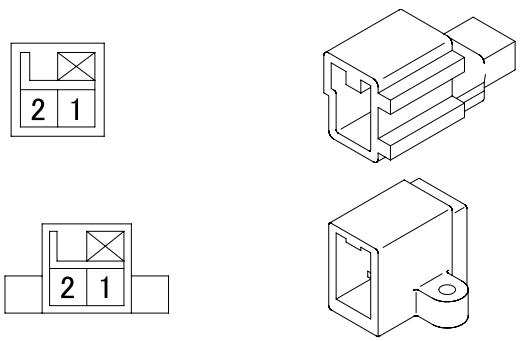

CONNECTOR CONFIGURATION CHART

Number shows number of pins	Female connector	Male connector
BX3A	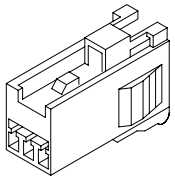 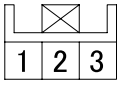	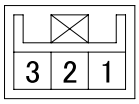 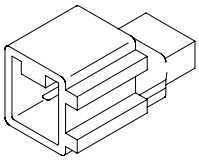 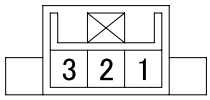 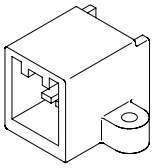
BX5A	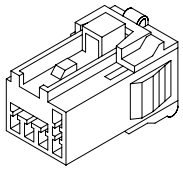 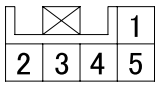	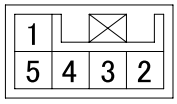 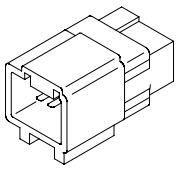 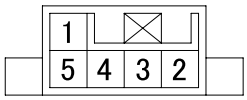 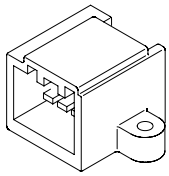
BX7A	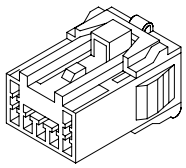 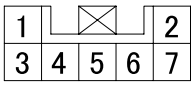	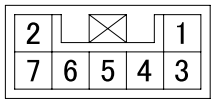 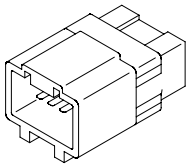 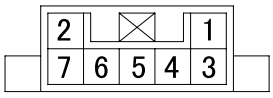 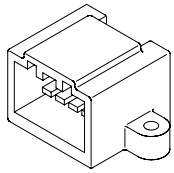
BX9A	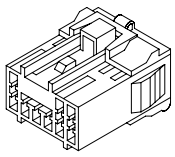 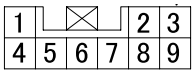	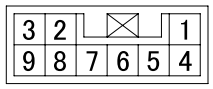 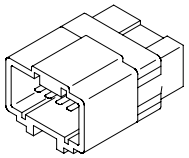 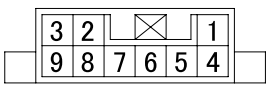 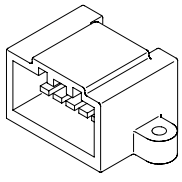

Number shows number of pins	Female connector	Male connector
BX11A	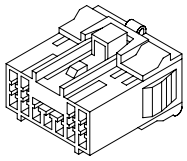 1 2 3 4 5 6 7 8 9 10 11	4 3 2 1 11 10 9 8 7 6 5 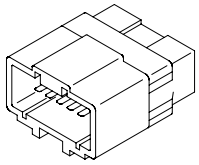 4 3 2 1 11 10 9 8 7 6 5 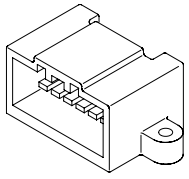
BX13A	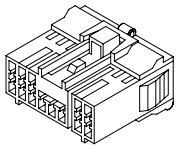 1 2 3 4 5 6 7 8 9 10 11 12 13	5 4 3 2 1 13 12 11 10 9 8 7 6 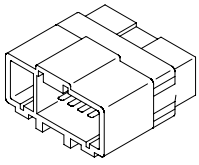 5 4 3 2 1 13 12 11 10 9 8 7 6 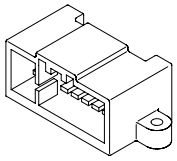
BX15A	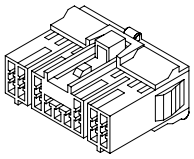 1 2 3 4 5 6 7 8 9 10 11 12 13 14 15	6 5 4 3 2 1 15 14 13 12 11 10 9 8 7 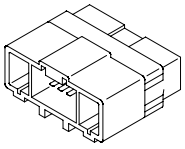 6 5 4 3 2 1 15 14 13 12 11 10 9 8 7 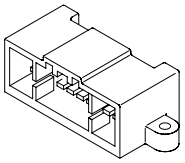
BX17A	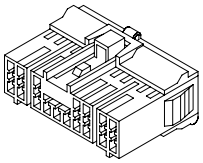 1 2 3 4 5 6 7 8 9 10 11 12 13 14 15 16 17	7 6 5 4 3 2 1 17 16 15 14 13 12 11 10 9 8 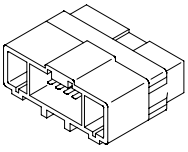 7 6 5 4 3 2 1 17 16 15 14 13 12 11 10 9 8 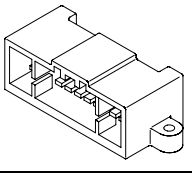

CONNECTOR CONFIGURATION CHART

Number shows number of pins	Female connector	Male connector
BX19A	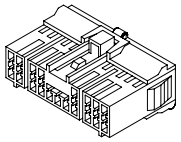 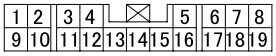	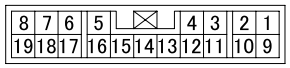 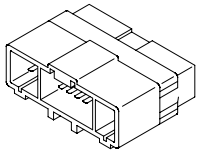 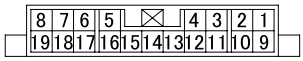 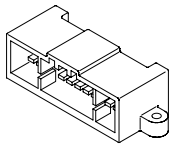

BY type

Number shows number of pins	Female connector	Male connector
BY4A	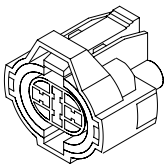 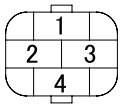	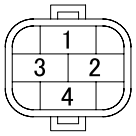

BZ type

Number shows number of pins	Female connector	Male connector
BZ12A	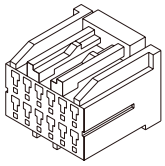 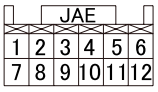	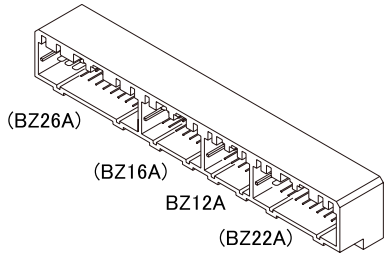
BZ16A	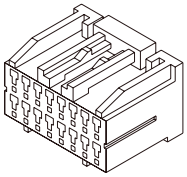 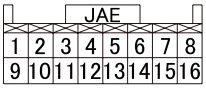	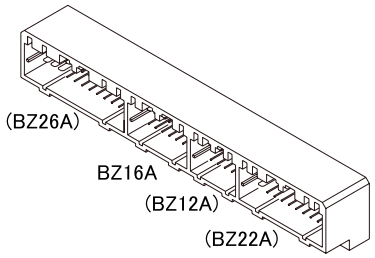
BZ22A	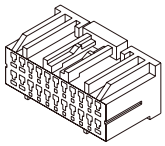 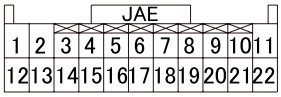	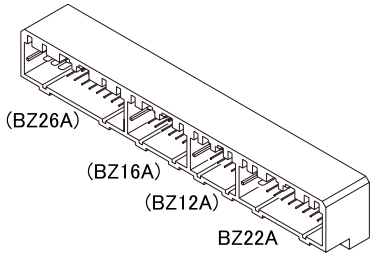

Number shows number of pins	Female connector	Male connector
BZ26A	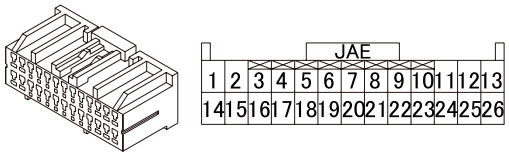	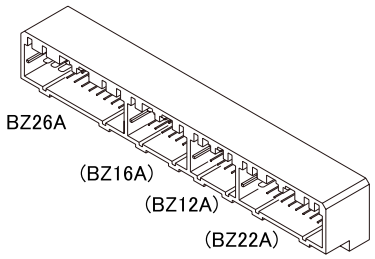

CA type

Number shows number of pins	Female connector	Male connector
CA2A		

CB type

Number shows number of pins	Female connector	Male connector
CB16A	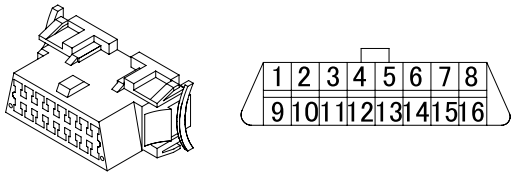	

CD type

Number shows number of pins	Female connector	Male connector
CD35A	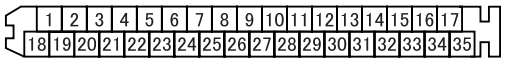	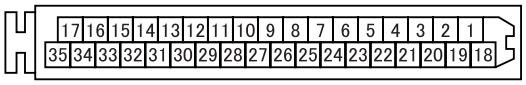
CD55A	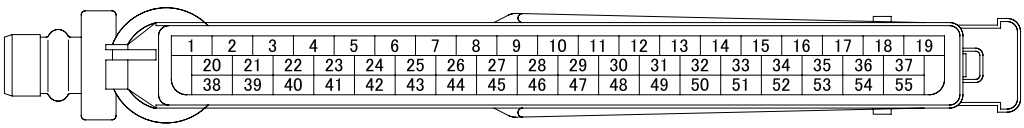	

CONNECTOR CONFIGURATION CHART

CE type

Number shows number of pins	Female connector	Male connector
CE2A		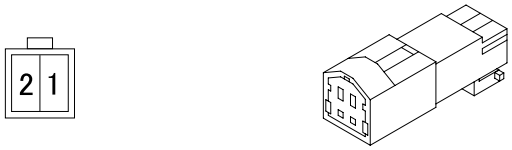
CE4A	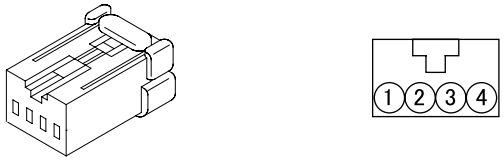	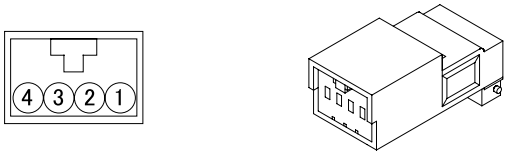
CE12A	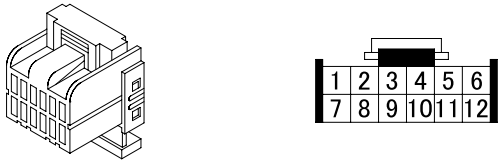	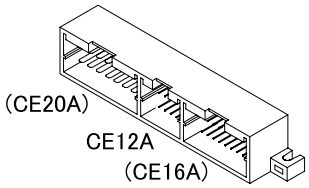
CE16A	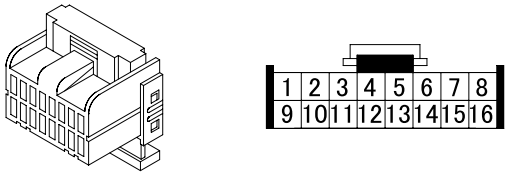	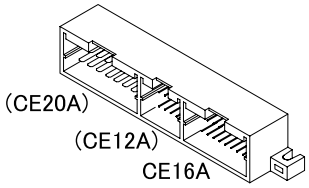
CE20A	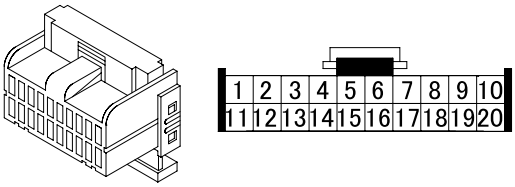	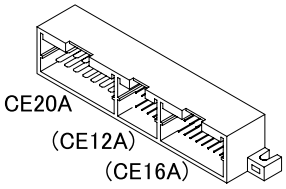

CF type

Number shows number of pins	Female connector	Male connector
CF21A	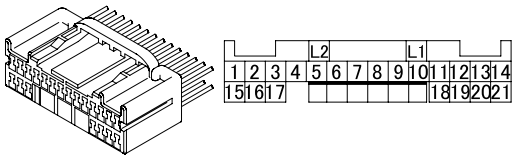	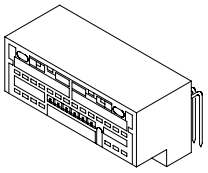

CH type

Number shows number of pins	Female connector	Male connector
CH2A	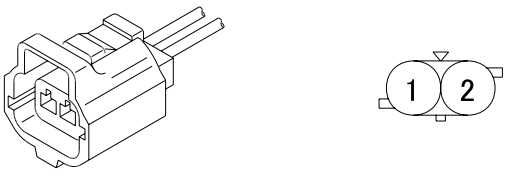	

Number shows number of pins	Female connector	Male connector
CH2B	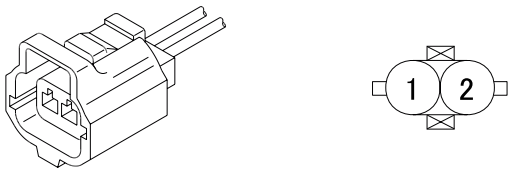	
CH3A	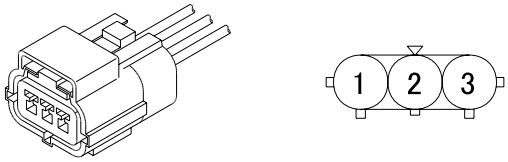	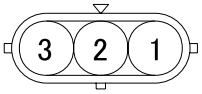

CK type

Number shows number of pins	Female connector	Male connector
CK3A		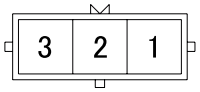

CL type

Number shows number of pins	Female connector	Male connector
CL14A	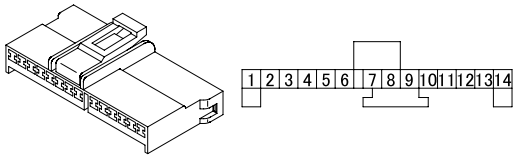	

CM type

Number shows number of pins	Female connector	Male connector
CM28A	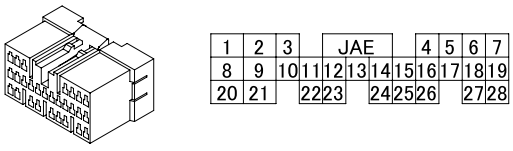	
CM30A	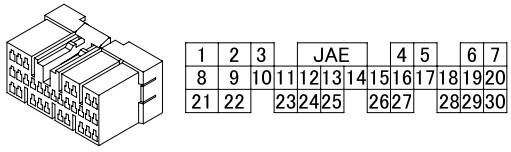	

CONNECTOR CONFIGURATION CHART

Number shows number of pins	Female connector	Male connector
CM35A	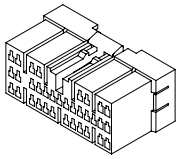 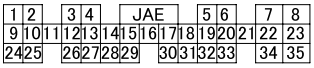	

CN type

Number shows number of pins	Female connector	Male connector
CN2A	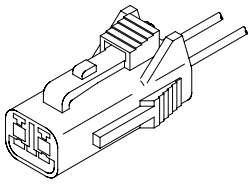	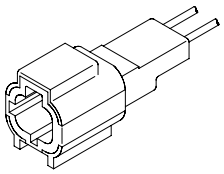
CN12A	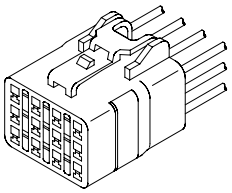 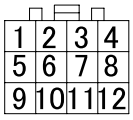	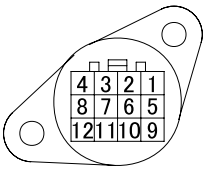 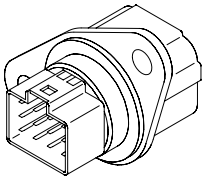
CN16A	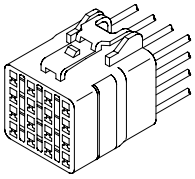 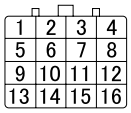	

CP type

Number shows number of pins	Female connector	Male connector
CP40A	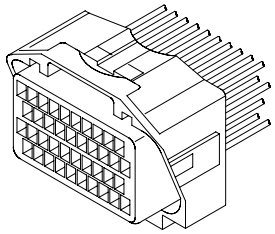 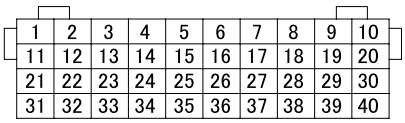	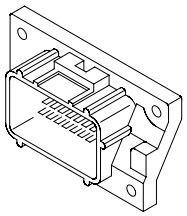 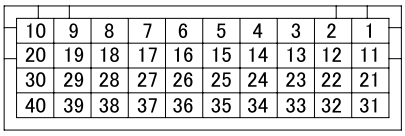

Number shows number of pins	Female connector	Male connector
CP40B	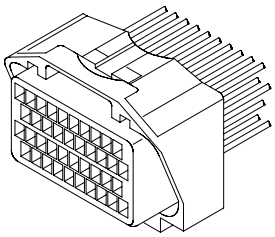 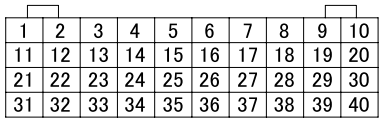 1 2 3 4 5 6 7 8 9 10 11 12 13 14 15 16 17 18 19 20 21 22 23 24 25 26 27 28 29 30 31 32 33 34 35 36 37 38 39 40	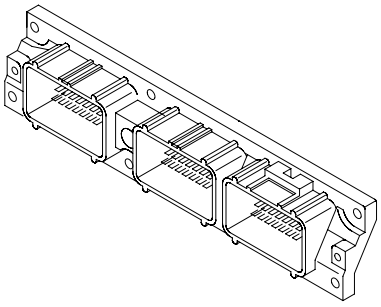 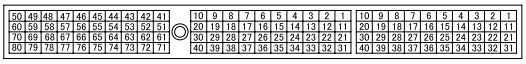 (CP80A) CP40B
CP80A	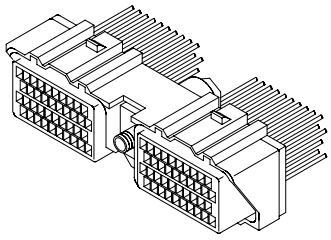 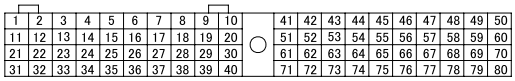 1 2 3 4 5 6 7 8 9 10 / 41 42 43 44 45 46 47 48 49 50 11 12 13 14 15 16 17 18 19 20 / 51 52 53 54 55 56 57 58 59 60 21 22 23 24 25 26 27 28 29 30 / 61 62 63 64 65 66 67 68 69 70 31 32 33 34 35 36 37 38 39 40 / 71 72 73 74 75 76 77 78 79 80	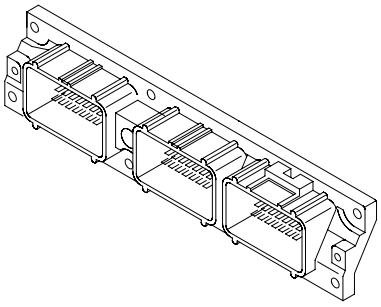 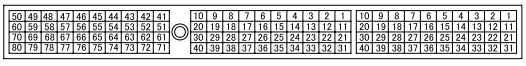 CP80A (CP40B)

CQ type

Number shows number of pins	Female connector	Male connector
CQ2B	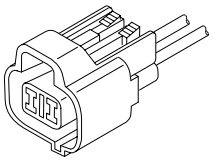 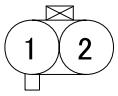 1 2	
CQ3A	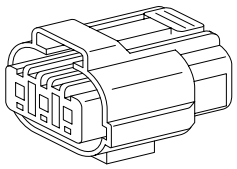	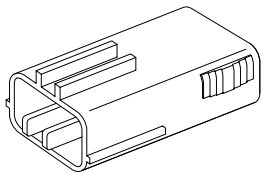
CQ8A	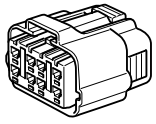 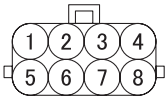 1 2 3 4 5 6 7 8	

CONNECTOR CONFIGURATION CHART

CR type

Number shows number of pins	Female connector	Male connector
CR16A		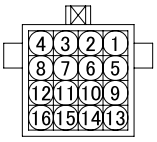

CS type

Number shows number of pins	Female connector	Male connector
CS2A	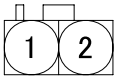	

CT type

Number shows number of pins	Female connector	Male connector
CT3A	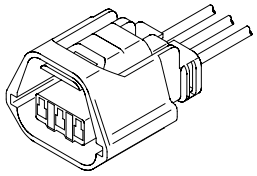 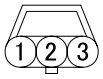	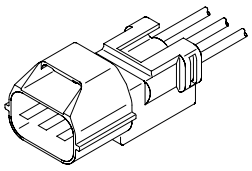
CT3B	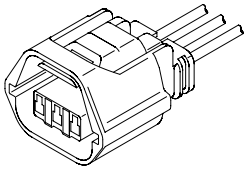 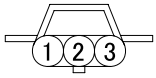	
CT10A	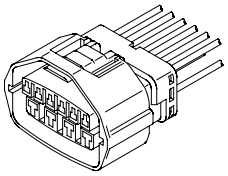 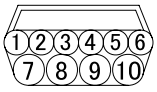	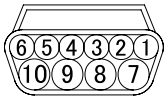 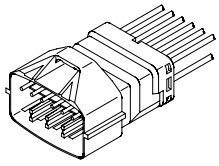

CU type

Number shows number of pins	Female connector	Male connector
CU6A	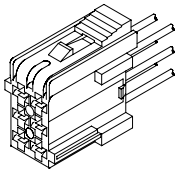 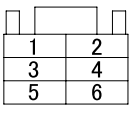	

Number shows number of pins	Female connector	Male connector
CU9A	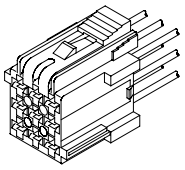 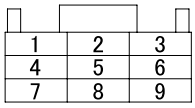	
CU12A	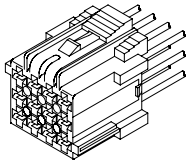 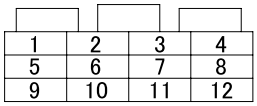	
CU15A	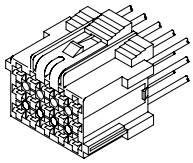 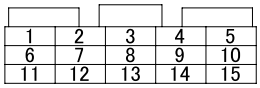	
CU17A	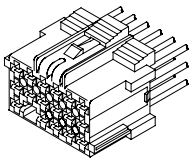 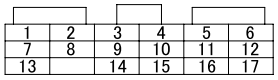	
CU18A	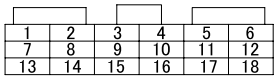	

CV type

Number shows number of pins	Female connector	Male connector
CV8A	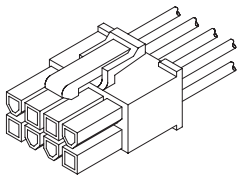 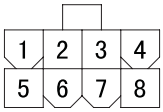	

CW type

Number shows number of pins	Female connector	Male connector
CW16A	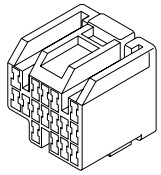 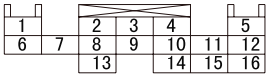	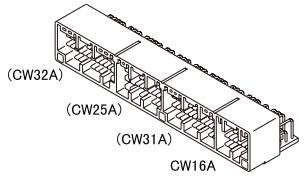

CONNECTOR CONFIGURATION CHART

Number shows number of pins	Female connector	Male connector
CW25A	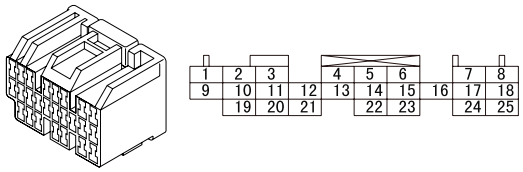	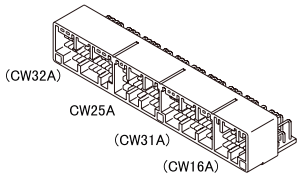
CW31A	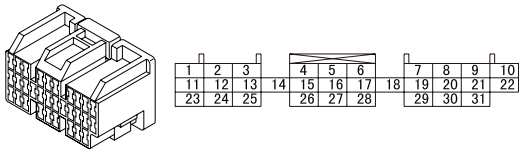	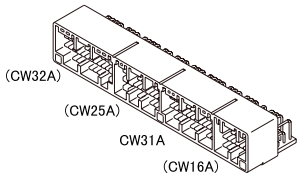
CW32A	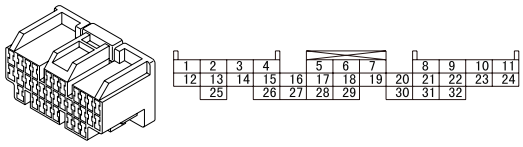	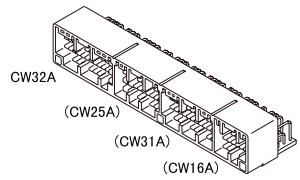

CX type

Number shows number of pins	Female connector	Male connector
CX30A	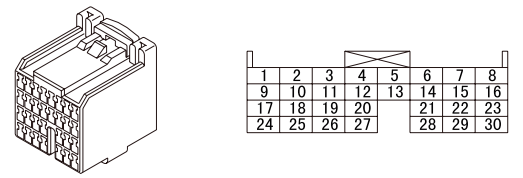	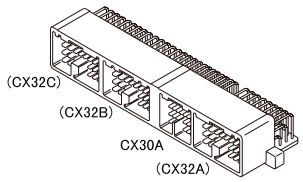
CX32A	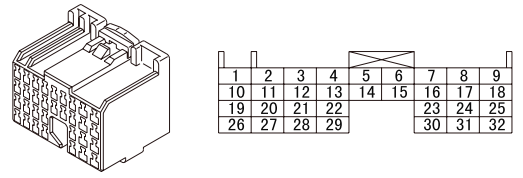	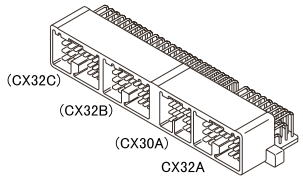
CX32B	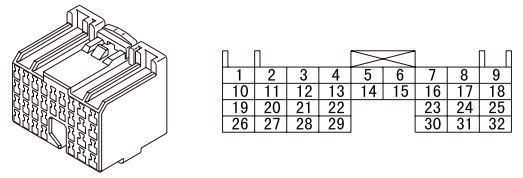	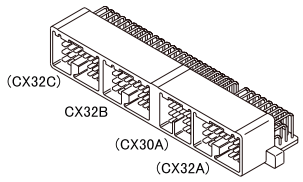
CX32C	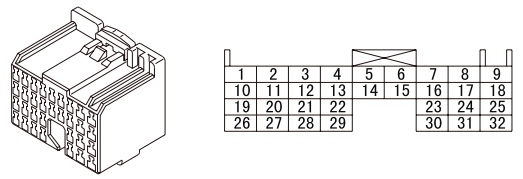	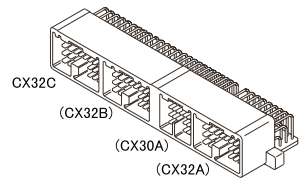

CY type

Number shows number of pins	Female connector	Male connector
CY17A	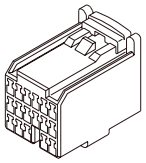 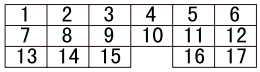	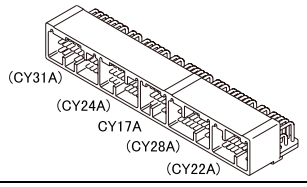
CY22A	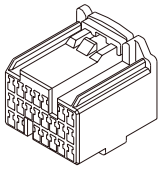	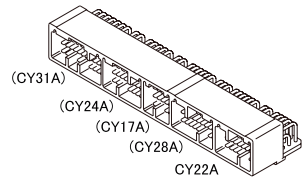
CY24A	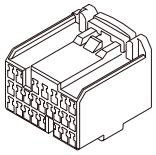 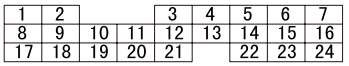	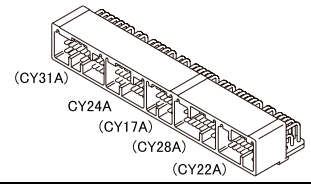
CY28A	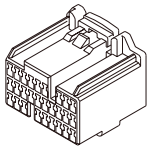 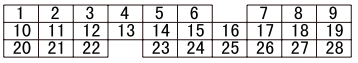	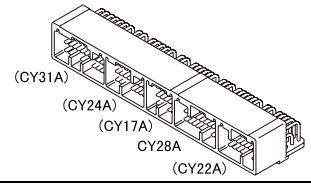
CY31A	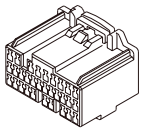 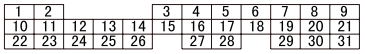	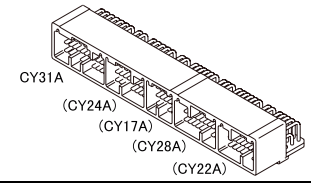

DA type

Number shows number of pins	Female connector	Male connector
DA20A	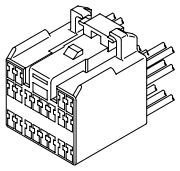 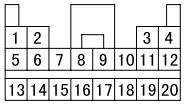	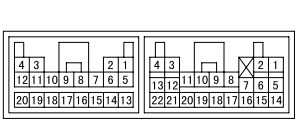 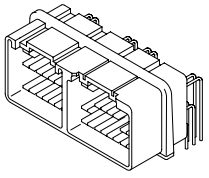
DA22A	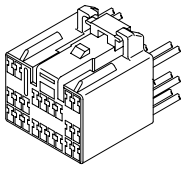 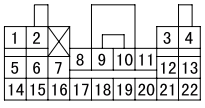	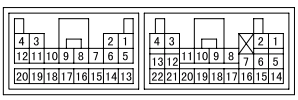 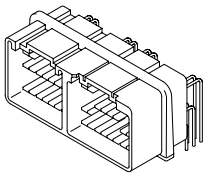
DA25A		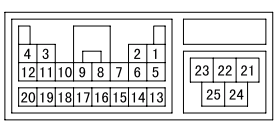 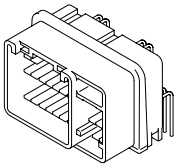

CONNECTOR CONFIGURATION CHART

DB type

Number shows number of pins	Female connector	Male connector
DB2A	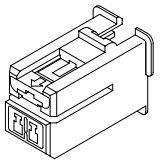	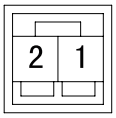 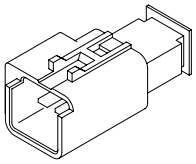

DC type

Number shows number of pins	Female connector	Male connector
DC3A	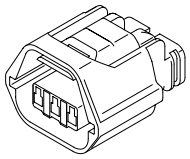	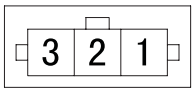 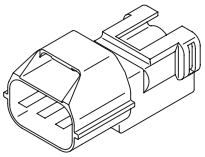

DD type

Number shows number of pins	Female connector	Male connector
DD1A	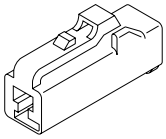	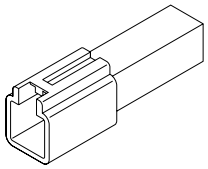
DD2A	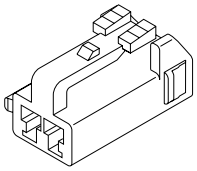	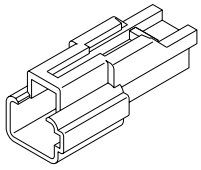
DD2B	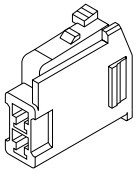	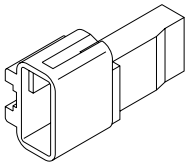
DD2C	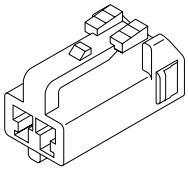	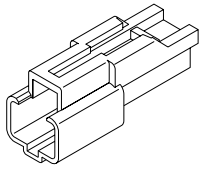
DD2E	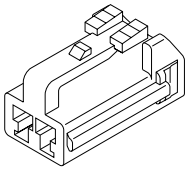	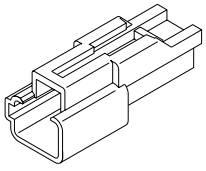

Number shows number of pins	Female connector	Male connector
DD2F	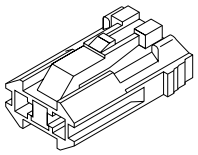	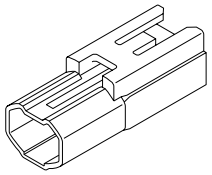
DD3A	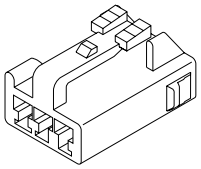	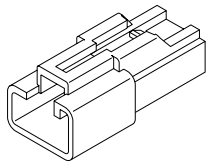
DD4A	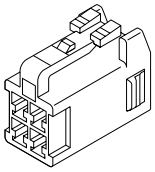	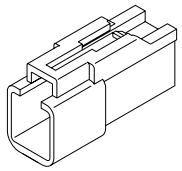
DD4C	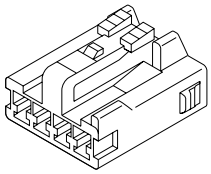 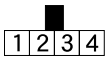	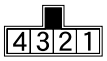 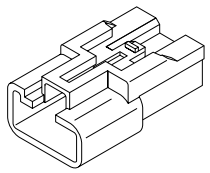
DD5A	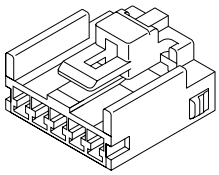 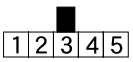	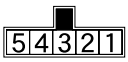 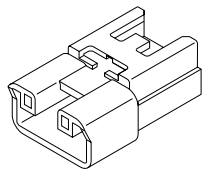
DD6A	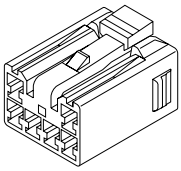 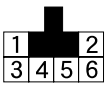	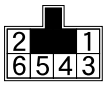 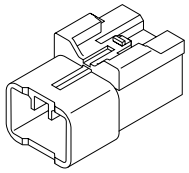
DD6B	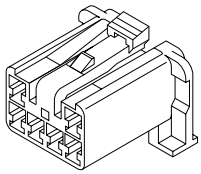 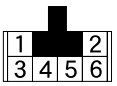	
DD6C	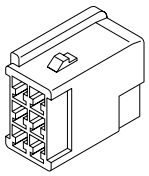 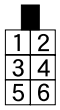	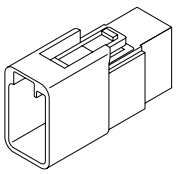
DD6E	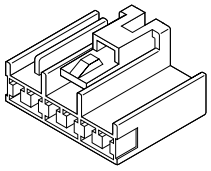 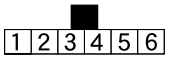	

CONNECTOR CONFIGURATION CHART

Number shows number of pins	Female connector	Male connector
DD7A	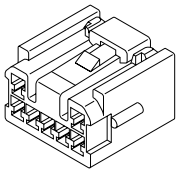 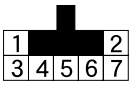	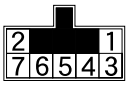 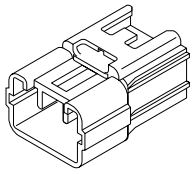
DD8A	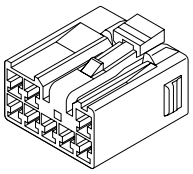 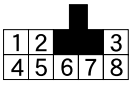	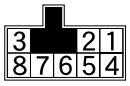 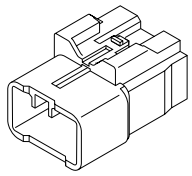
DD9A	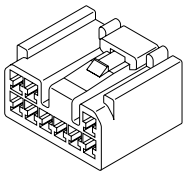 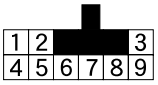	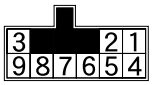 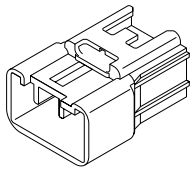
DD10A	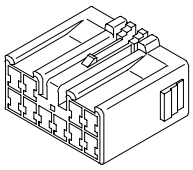 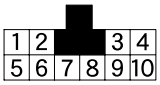	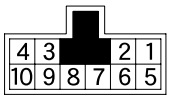 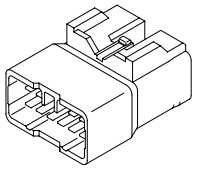
DD10B	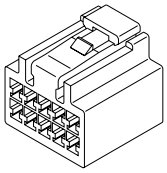 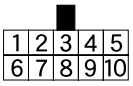	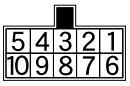 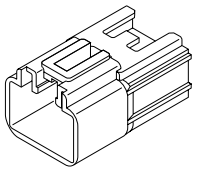
DD11A	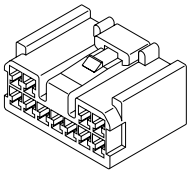 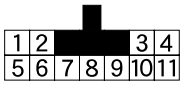	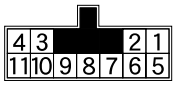 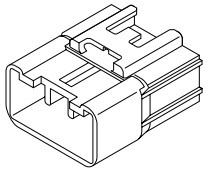
DD12A	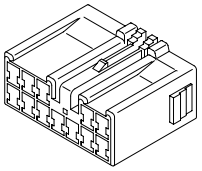 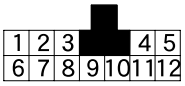	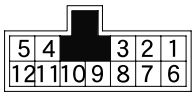 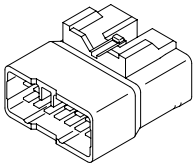
DD12B	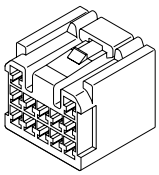 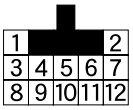	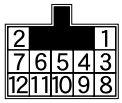 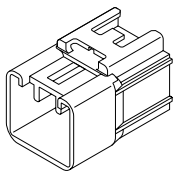
DD12C	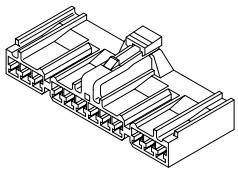 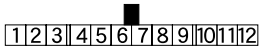	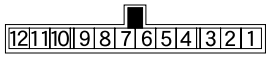

Number shows number of pins	Female connector	Male connector
DD13A	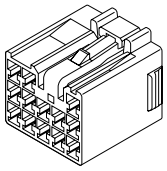 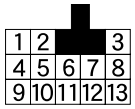	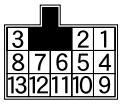 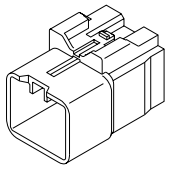
DD13B	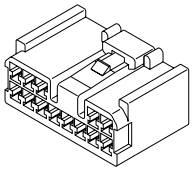 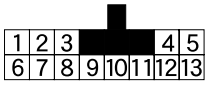	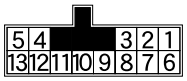 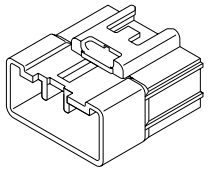
DD14A	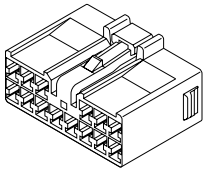 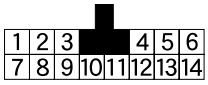	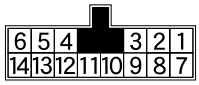 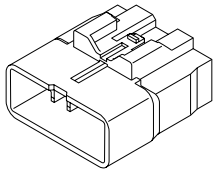
DD14B	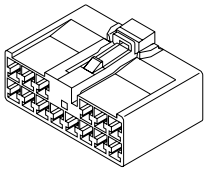 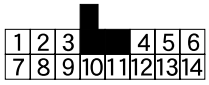	
DD15A	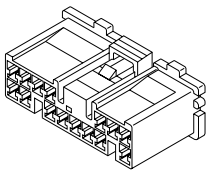 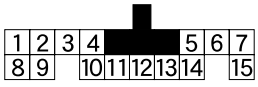	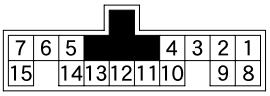 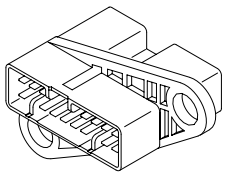
DD15B	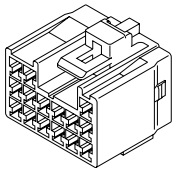 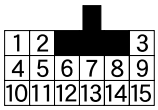	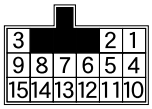 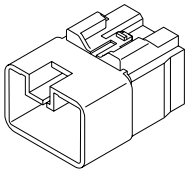
DD16A	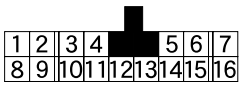	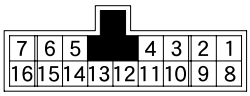
DD16B	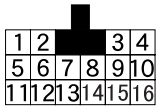	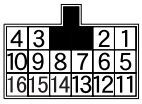
DD18A	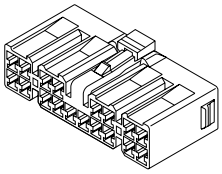 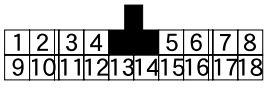	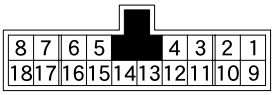 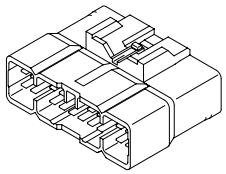

CONNECTOR CONFIGURATION CHART

Number shows number of pins	Female connector	Male connector
DD20A	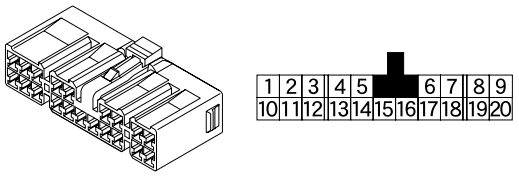	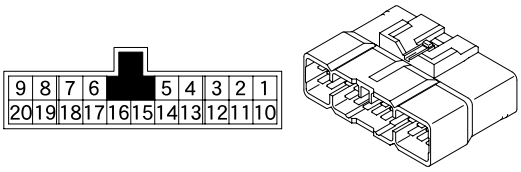
DD22A	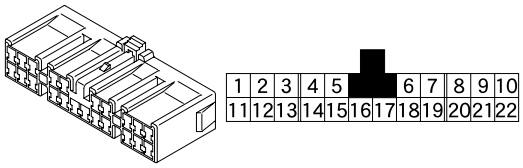	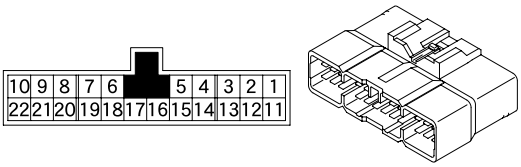

DE type

Number shows number of pins	Female connector	Male connector
DE3A		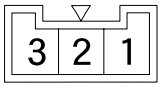
DE7A		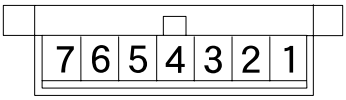

DF type

Number shows number of pins	Female connector	Male connector
DF3A		

DG type

Number shows number of pins	Female connector	Male connector
DG1A	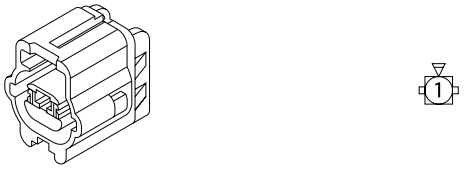	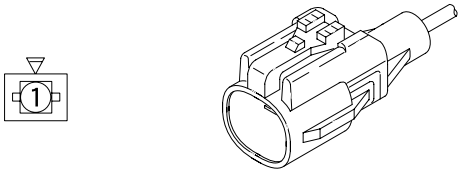

Number shows number of pins	Female connector	Male connector
DG1B	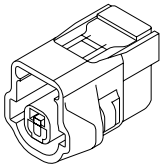	
DG1C	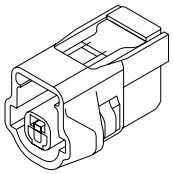	
DG1D	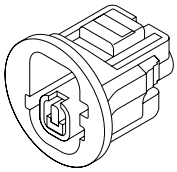	
DG2A	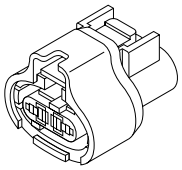	
DG2B	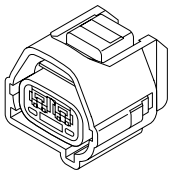	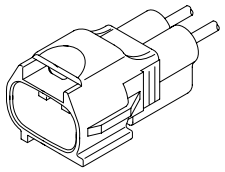
DG2C	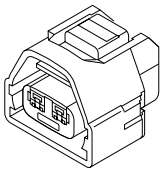	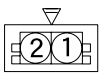 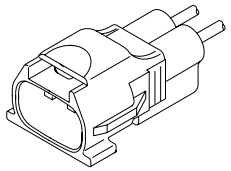
DG2D	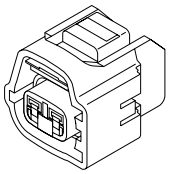	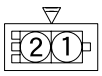 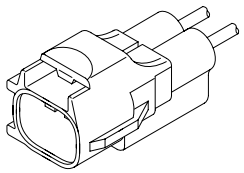
DG2E	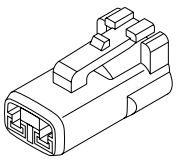	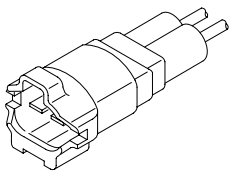
DG2F	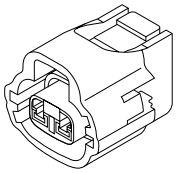	

CONNECTOR CONFIGURATION CHART

Number shows number of pins	Female connector	Male connector
DG2G	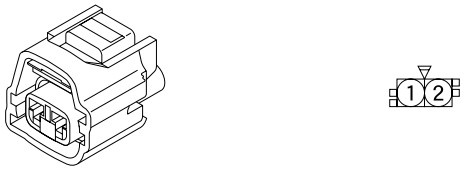	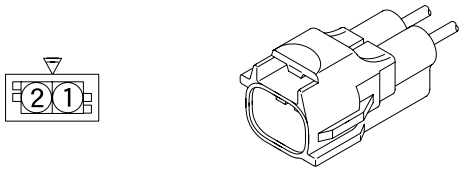
DG2H	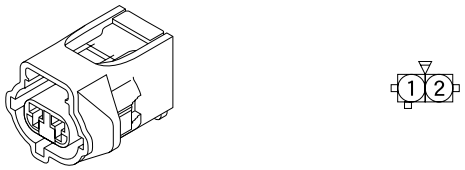	
DG2J		
DG2K		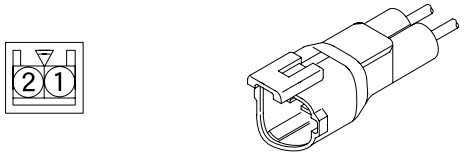
DG2L	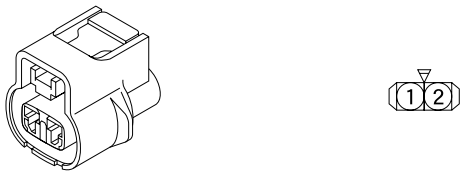	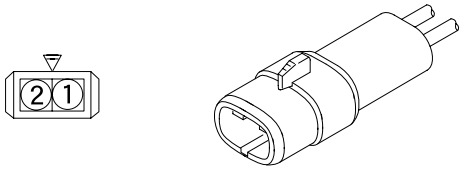
DG2M	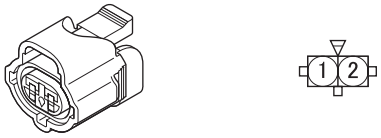	
DG3A	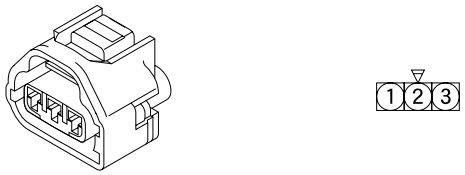	
DG3B		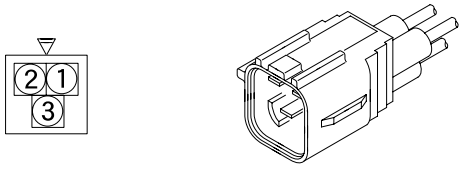
DG4A		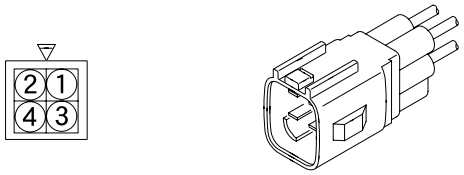

Number shows number of pins	Female connector	Male connector
DG4B	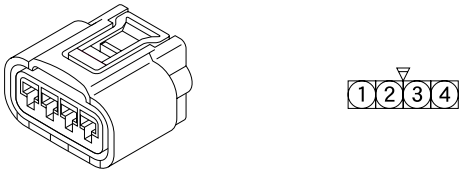	
DG4C		
DG5A	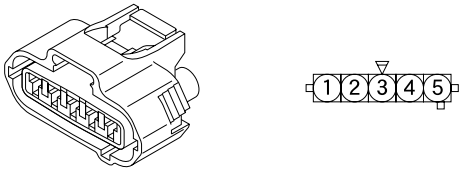	
DG5B	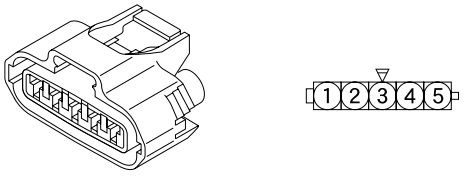	
DG5C	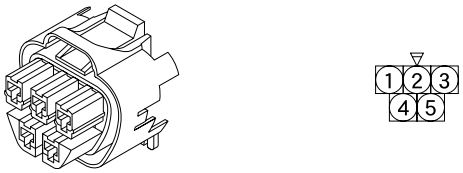	
DG5D	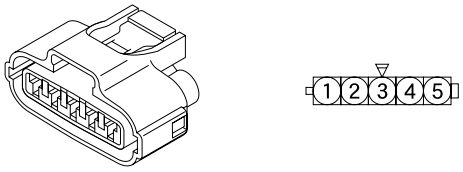	
DG6A	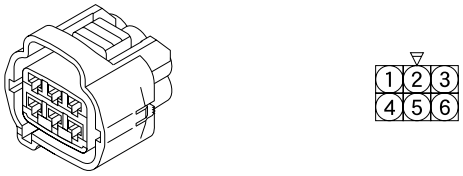	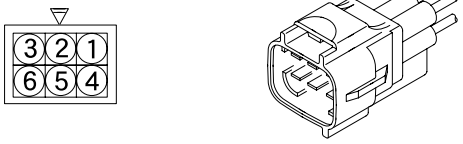
DG6B	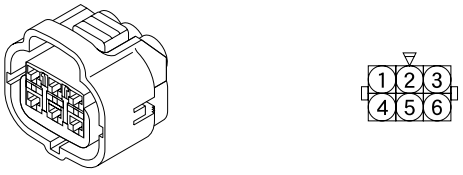	
DG6C	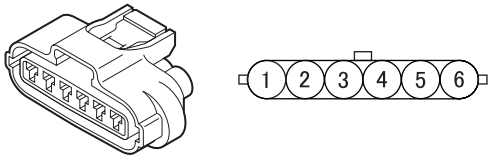	

CONNECTOR CONFIGURATION CHART

Number shows number of pins	Female connector	Male connector
DG8A	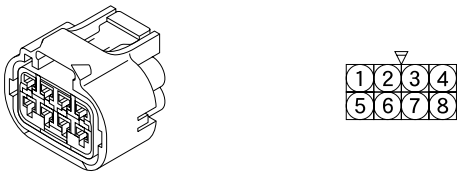	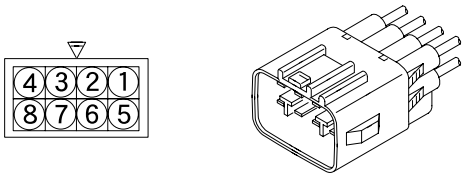
DG8B	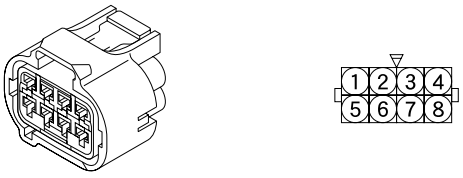	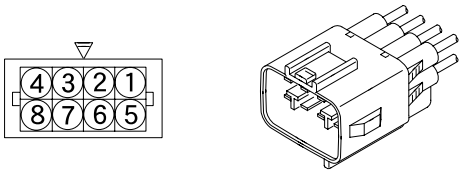
DG10A	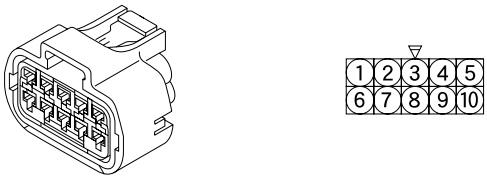	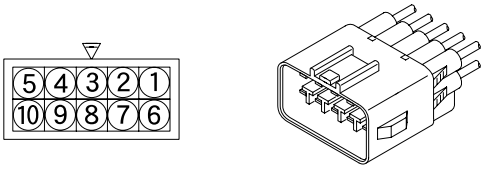
DG12A	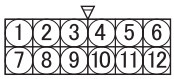	

DH type

Number shows number of pins	Female connector	Male connector
DH2A		
DH5A	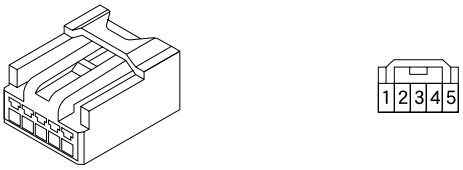	
DH10A	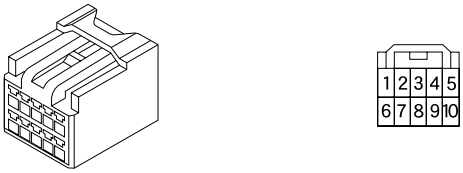	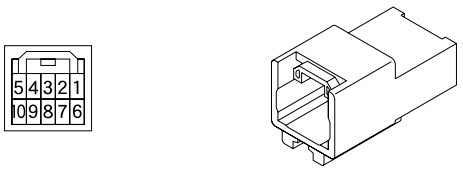
DH14A	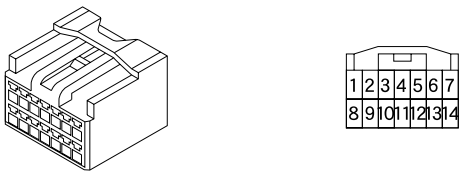	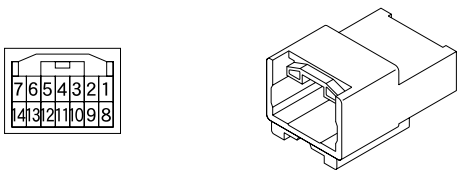

Number shows number of pins	Female connector	Male connector
DH18A	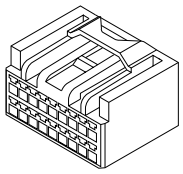 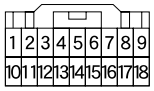	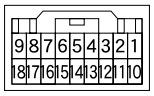 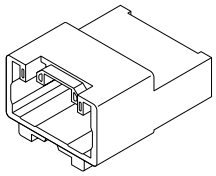
DH20A	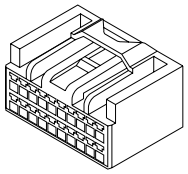 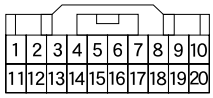	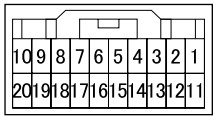 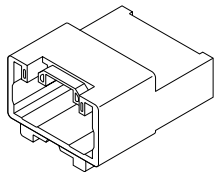
DH22A	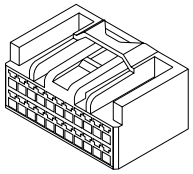 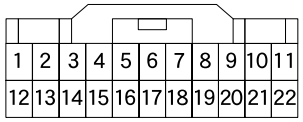	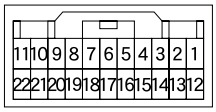 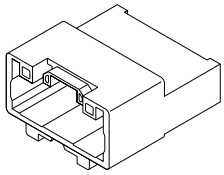

DJ type

Number shows number of pins	Female connector	Male connector
DJ10A	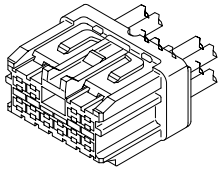 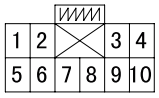	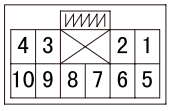 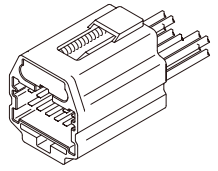
DJ10B	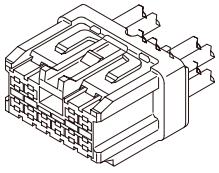 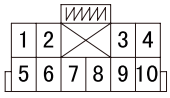	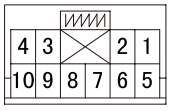 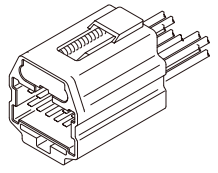

DK type

Number shows number of pins	Female connector	Male connector
DK2A	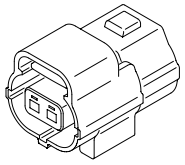	
DK2B	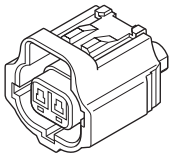	

CONNECTOR CONFIGURATION CHART

Number shows number of pins	Female connector	Male connector
DK3A	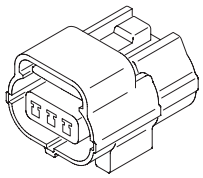 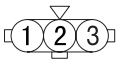	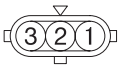 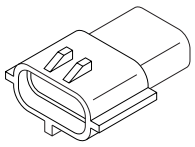
DK4A	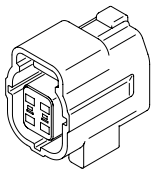 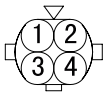	

DL type

Number shows number of pins	Female connector	Male connector
DL4A	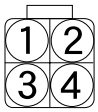	

DM type

Number shows number of pins	Female connector	Male connector
DM3A	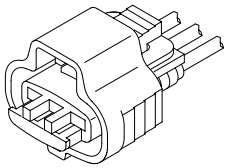 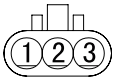	
DM4A	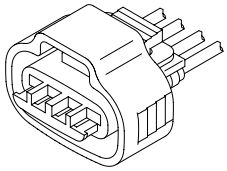 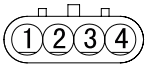	

DN type

Number shows number of pins	Female connector	Male connector
DN4A	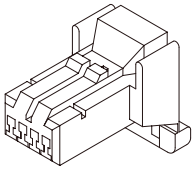 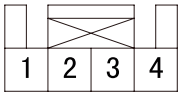	

DP type

Number shows number of pins	Female connector	Male connector
DP5A	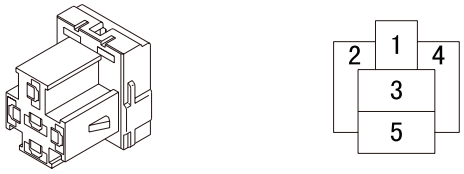	

DQ type

Number shows number of pins	Female connector	Male connector
DQ2A	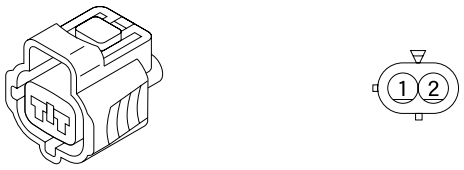	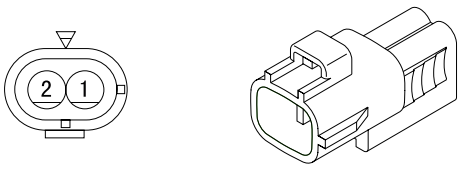
DQ2B	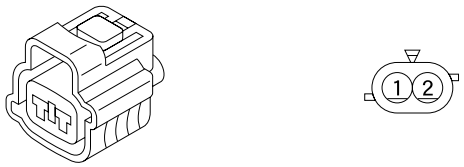	
DQ2C	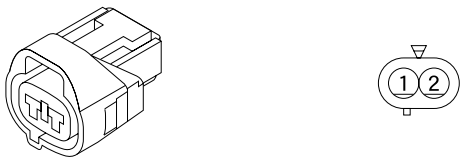	
DQ2D		
DQ2E	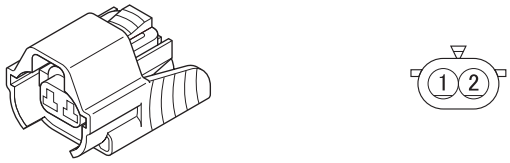	
DQ2F	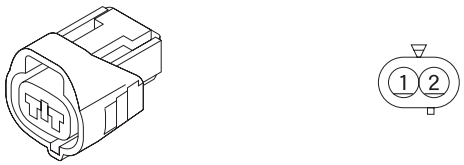	
DQ3A	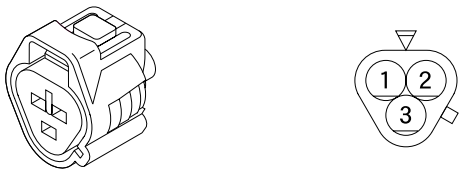	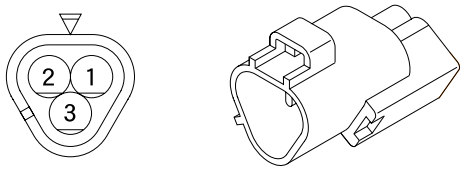

CONNECTOR CONFIGURATION CHART

Number shows number of pins	Female connector	Male connector
DQ3B	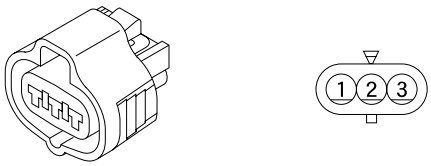	
DQ4A	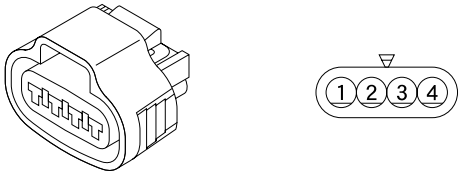	
DQ4B		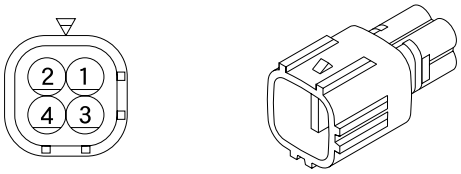
DQ8A	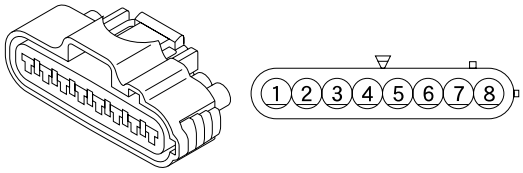	

DS type

Number shows number of pins	Female connector	Male connector
DS2A	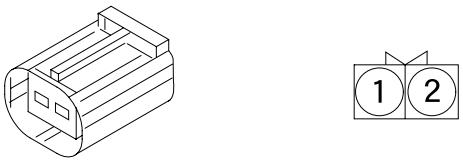	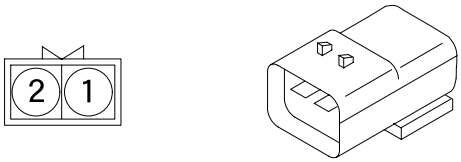
DS6A	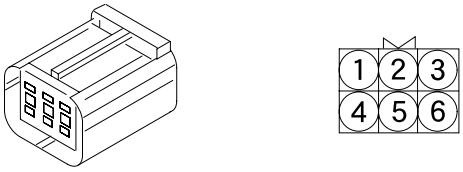	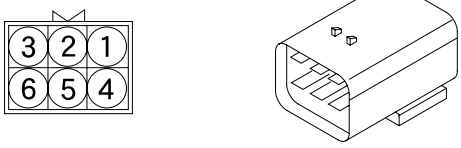

DT type

Number shows number of pins	Female connector	Male connector
DT1A	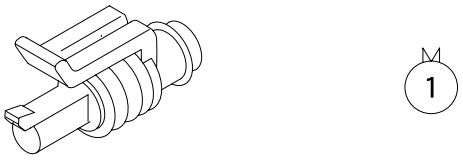	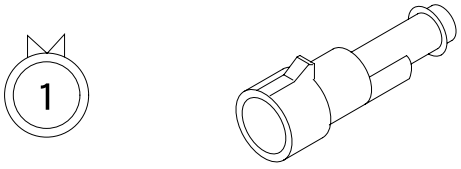

Number shows number of pins	Female connector	Male connector
DT2A		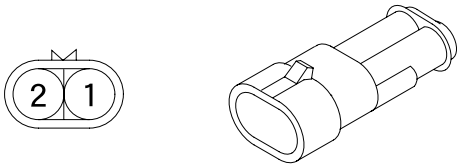
DT3A	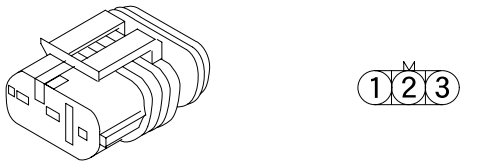	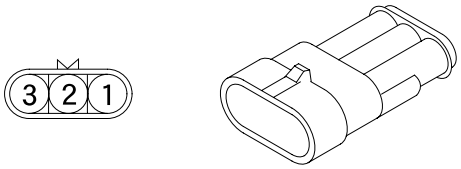
DT4A	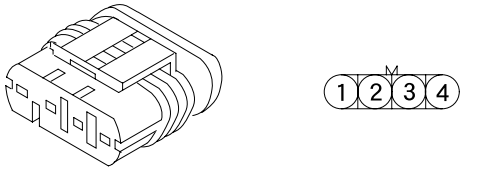	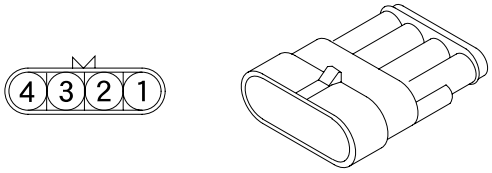

DU type

Number shows number of pins	Female connector	Male connector
DU2A	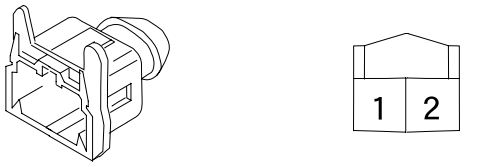	

DV type

Number shows number of pins	Female connector	Male connector
DV4A	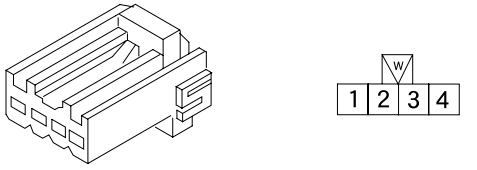	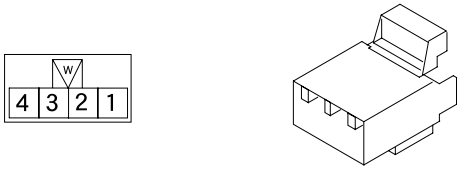

DW type

Number shows number of pins	Female connector	Male connector
DW2A		

CONNECTOR CONFIGURATION CHART

DX type

Number shows number of pins	Female connector	Male connector
DX2A		

DY type

Number shows number of pins	Female connector	Male connector
DY1A	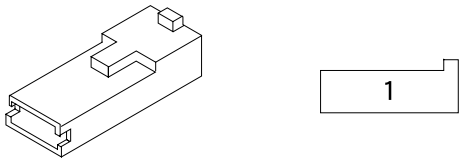	
DY1B	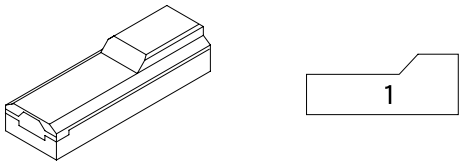	

DZ type

Number shows number of pins	Female connector	Male connector
DZ1A	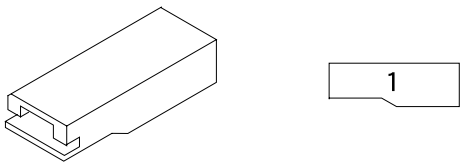	

EA type

Number shows number of pins	Female connector	Male connector
EA8A		
EA8B		

EB type

Number shows number of pins	Female connector	Male connector
EB8A	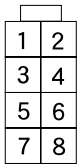	

EC type

Number shows number of pins	Female connector	Male connector
EC2A	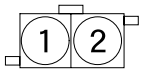	

ED type

Number shows number of pins	Female connector	Male connector
ED2A	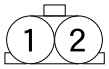	

EE type

Number shows number of pins	Female connector	Male connector
EE2A	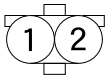	

EF type

Number shows number of pins	Female connector	Male connector
EF2A	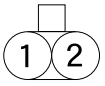	

CONNECTOR CONFIGURATION CHART

EG type

Number shows number of pins	Female connector	Male connector
EG4A	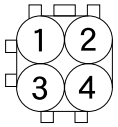	

EH type

Number shows number of pins	Female connector	Male connector
EH2A	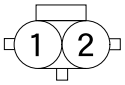	

EJ type

Number shows number of pins	Female connector	Male connector
EJ9A	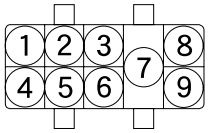	

EK type

Number shows number of pins	Female connector	Male connector
EK2A	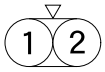	

EL type

Number shows number of pins	Female connector	Male connector
EL2A	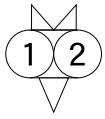	

EM type

Number shows number of pins	Female connector	Male connector
EM40A	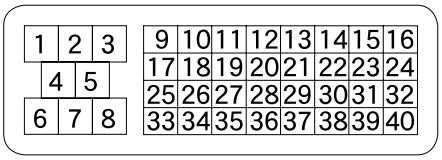	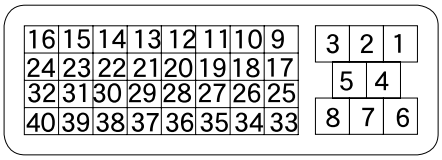
EM81A	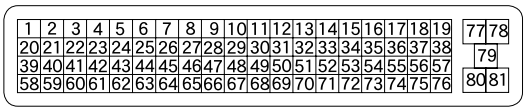	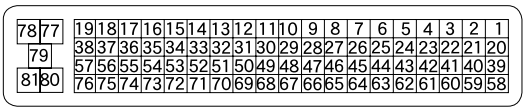

EN type

Number shows number of pins	Female connector	Male connector
EN4A	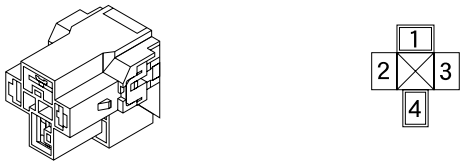	
EN5A		

EP type

Number shows number of pins	Female connector	Male connector
EP34A	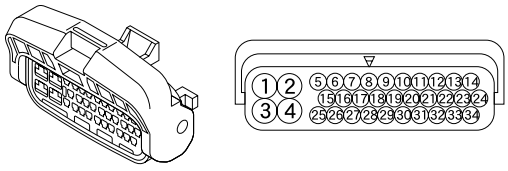	

EQ type

Number shows number of pins	Female connector	Male connector
EQ4A		

CONNECTOR CONFIGURATION CHART

Number shows number of pins	Female connector	Male connector
EQ4B	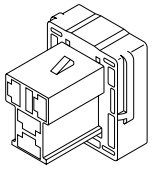 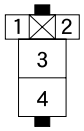	
EQ5A	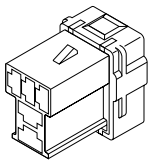 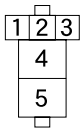 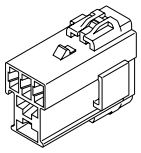 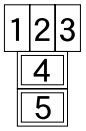	
EQ5B	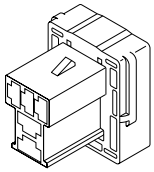 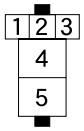	

ER type

Number shows number of pins	Female connector	Male connector
ER2A	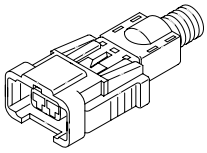	
ER6A	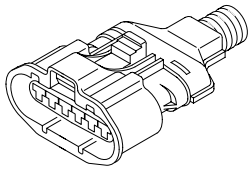 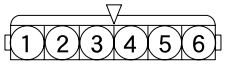	
ER8A	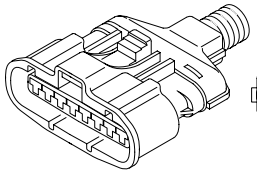 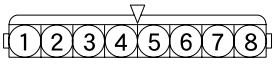	

ES type

Number shows number of pins	Female connector	Male connector
ES2A	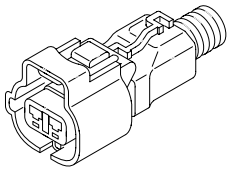	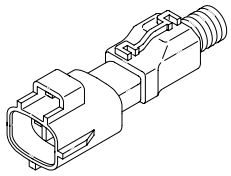
ES2B	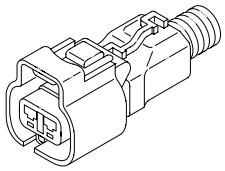	
ES2C	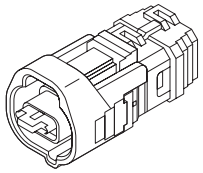	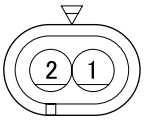
ES3A	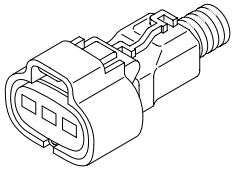	
ES3B	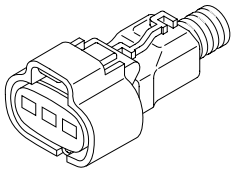 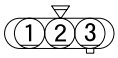	
ES4A	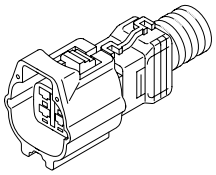	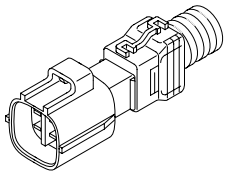

ET type

Number shows number of pins	Female connector	Male connector
ET1A	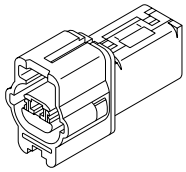	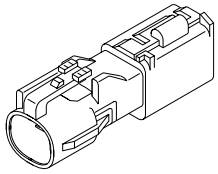
ET1B	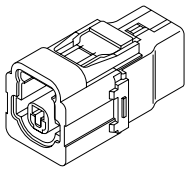	

CONNECTOR CONFIGURATION CHART

Number shows number of pins	Female connector	Male connector
ET2A	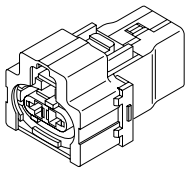	
ET2B	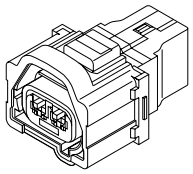	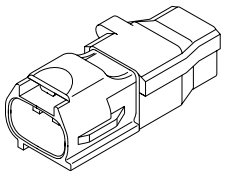
ET2C	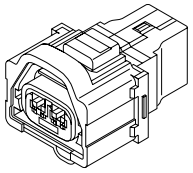	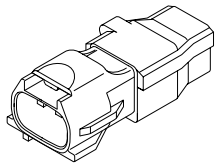
ET2D	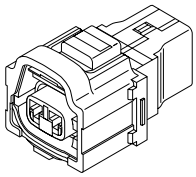	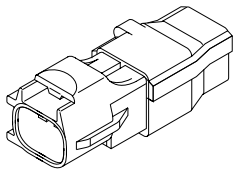
ET2F	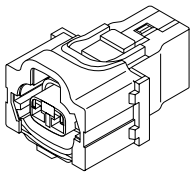	
ET2G	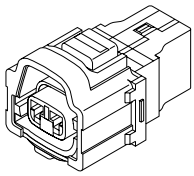	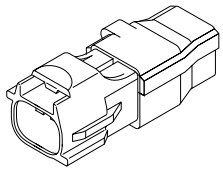
ET2L	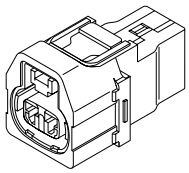	
ET3A	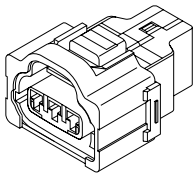	
ET3B	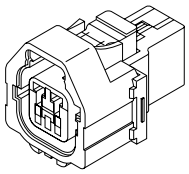	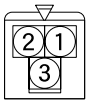 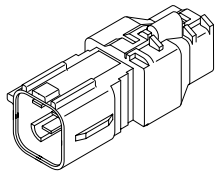

Number shows number of pins	Female connector	Male connector
ET3C	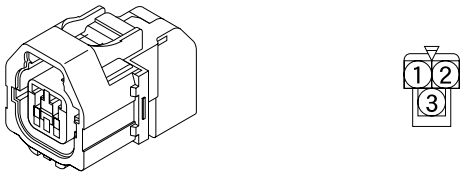	
ET4A	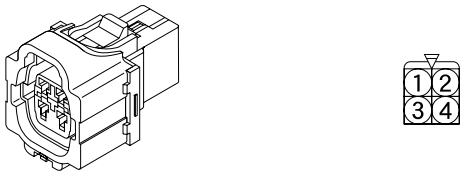	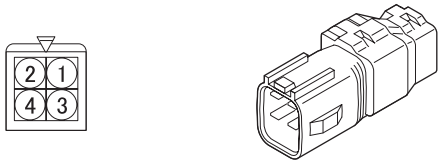
ET4B	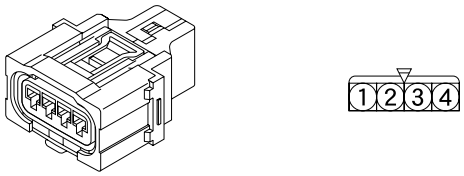	
ET5A	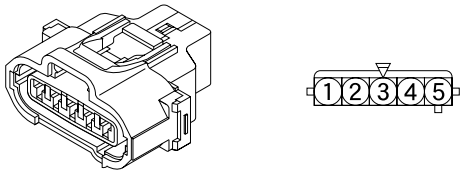	
ET5B	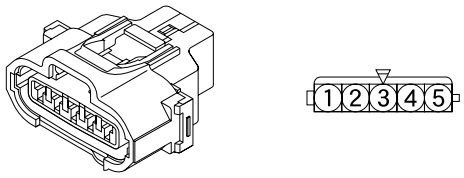	
ET5D	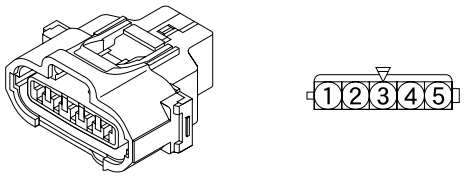	
ET6A	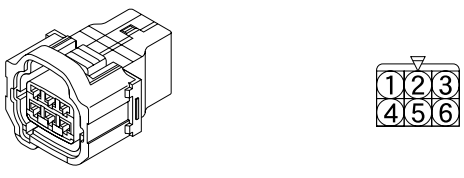	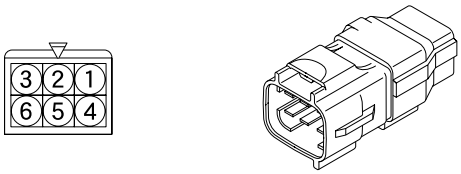
ET6B	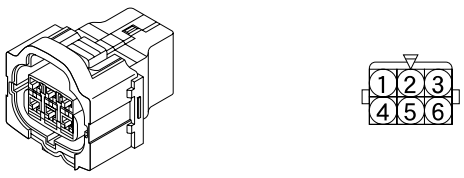	
ET6C	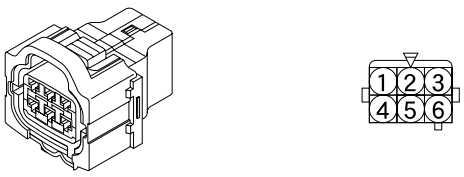	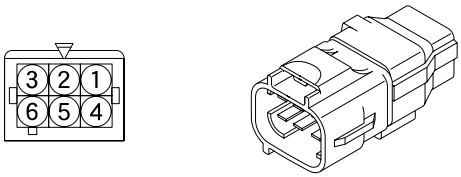

CONNECTOR CONFIGURATION CHART

Number shows number of pins	Female connector	Male connector
ET8A	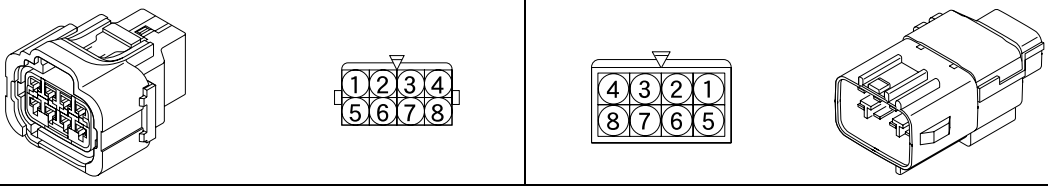	
ET8B	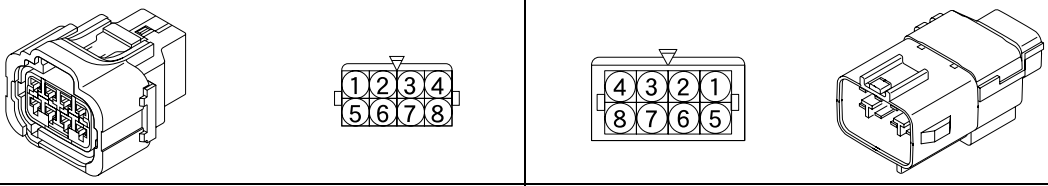	
ET10A	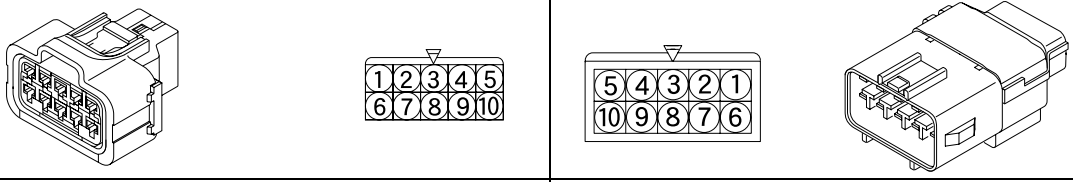	
ET32A	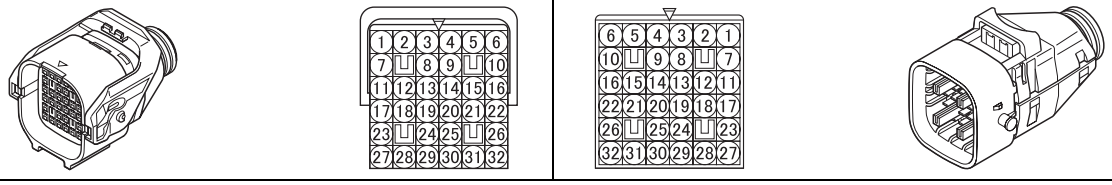	

EU type

Number shows number of pins	Female connector	Male connector
EU1A	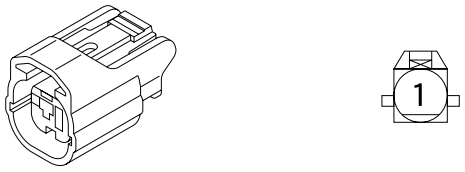	

EV type

Number shows number of pins	Female connector	Male connector
EV2A	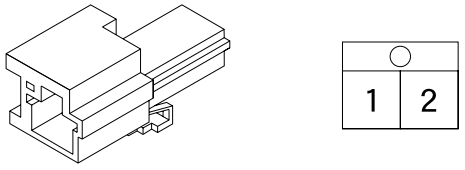	

EW type

Number shows number of pins	Female connector	Male connector
EW12A	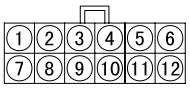	

EX type

Number shows number of pins	Female connector	Male connector
EX5A	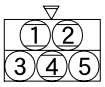	

EY type

Number shows number of pins	Female connector	Male connector
EY3A	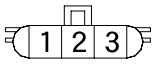	

EZ type

Number shows number of pins	Female connector	Male connector
EZ3A	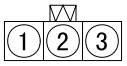	

FA type

Number shows number of pins	Female connector	Male connector
FA2B	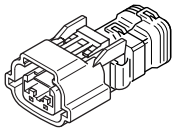 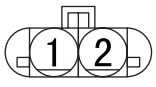	

CONNECTOR CONFIGURATION CHART

Number shows number of pins	Female connector	Male connector
FA5A	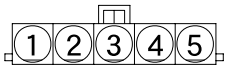	

FB type

Number shows number of pins	Female connector	Male connector
FB55A	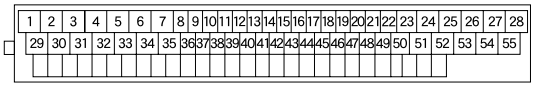	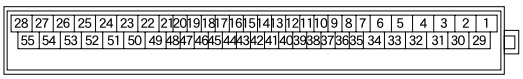

GA type

Number shows number of pins	Female connector	Male connector
GA1A	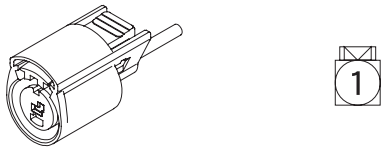	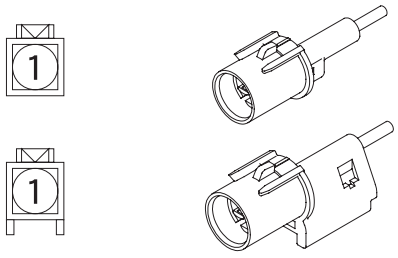
GA2A	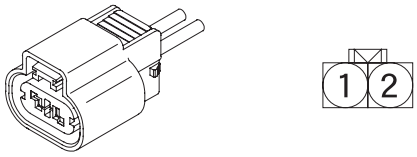	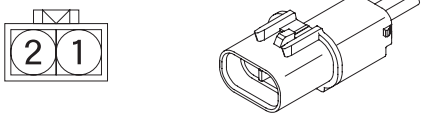
GA2B	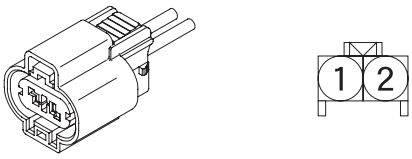	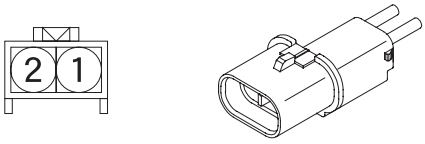
GA3A	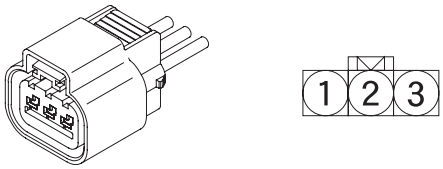	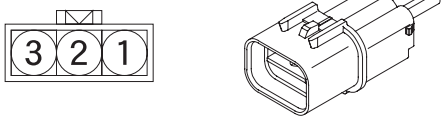
GA3B	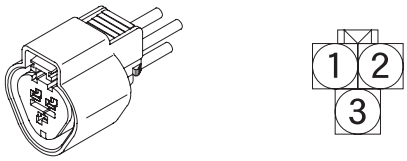	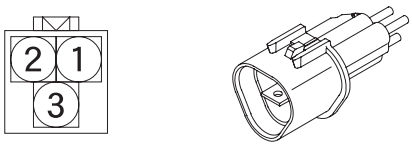

Number shows number of pins	Female connector	Male connector
GA4A	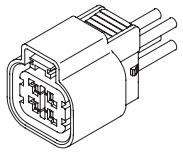 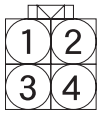	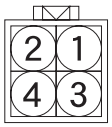 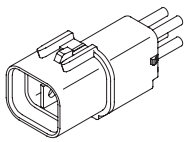
GA4B	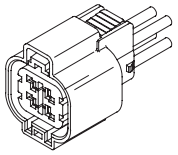 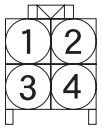	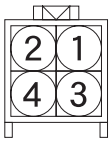 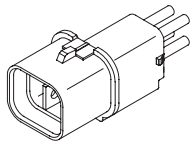
GA6A	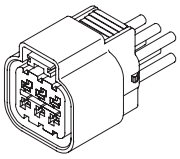 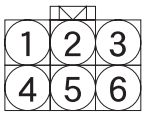	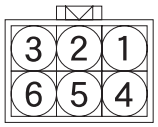 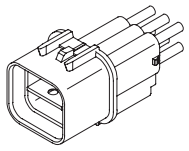
GA6B	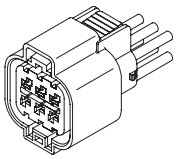 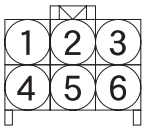	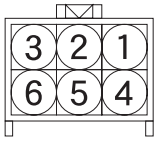 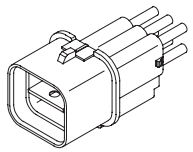
GA8A	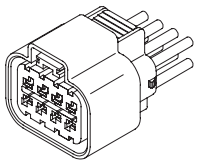 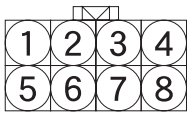	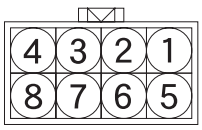 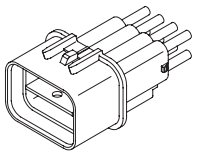
GA10A	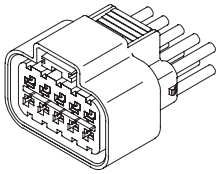 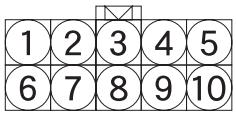	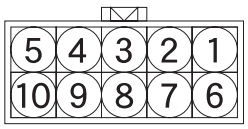 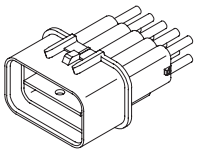
GA12A	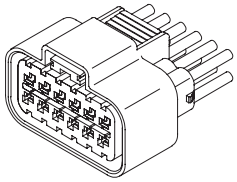 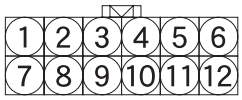	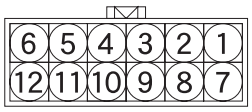 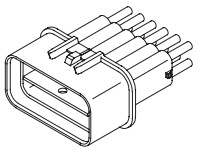

GB type

Number shows number of pins	Female connector	Male connector
GB1A	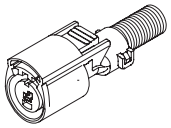	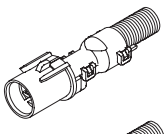 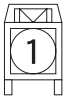 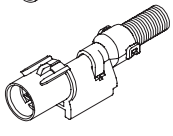

CONNECTOR CONFIGURATION CHART

Number shows number of pins	Female connector	Male connector
GB2A	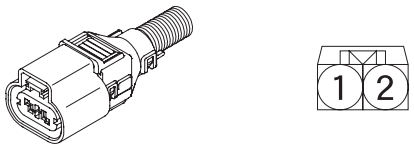	
GB2B	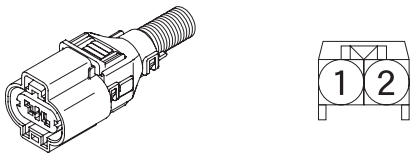	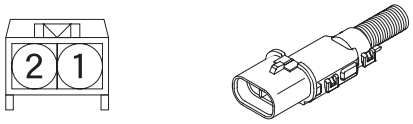
GB3A	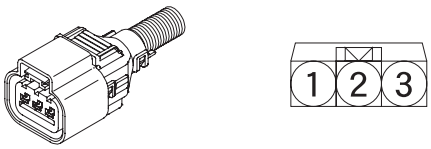	
GB3B	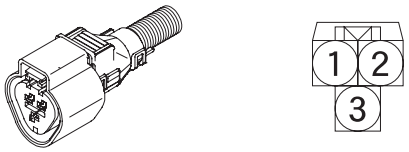	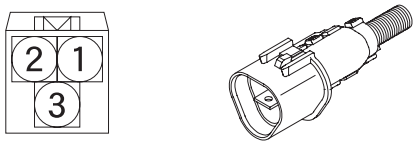
GB4A	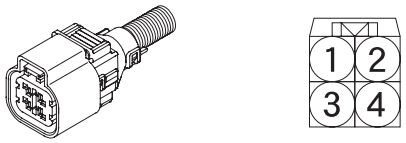	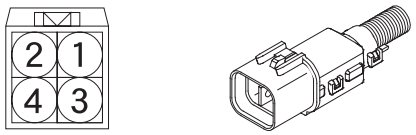
GB4B	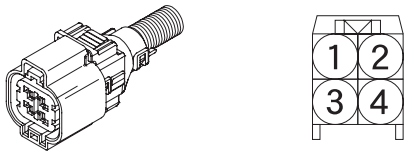	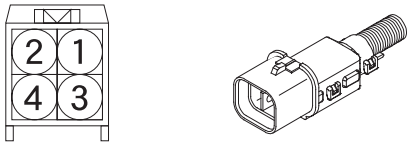
GB6A	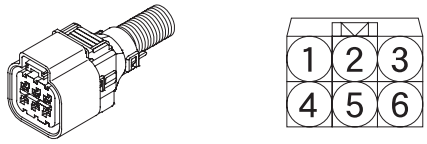	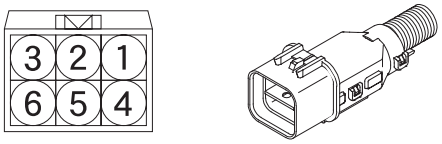
GB6B	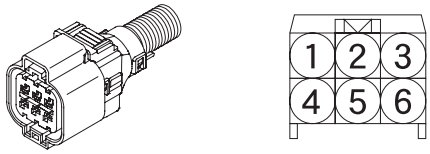	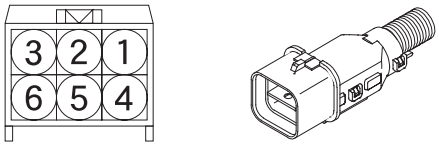
GB8A	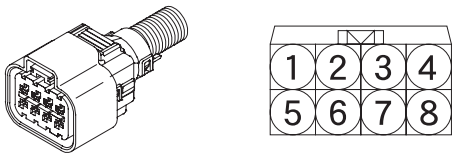	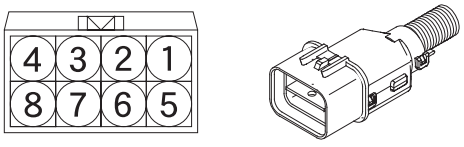

Number shows number of pins	Female connector	Male connector
GB10A	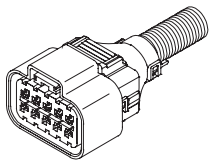 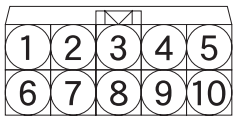	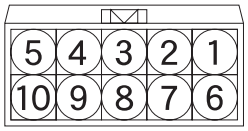 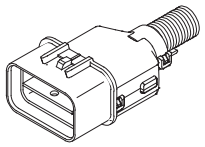
GB12A	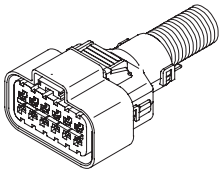 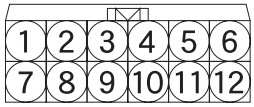	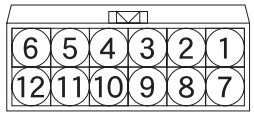 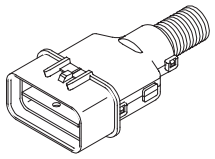

GC type

Number shows number of pins	Female connector	Male connector
GC32A	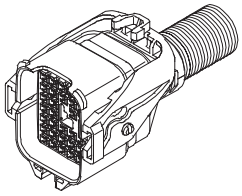 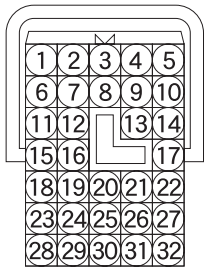	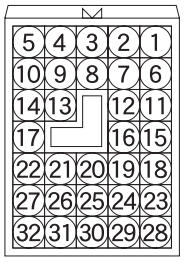 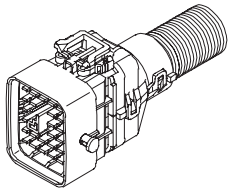

GD type

Number shows number of pins	Female connector	Male connector
GD1A	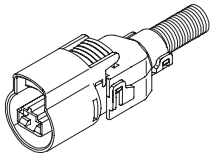	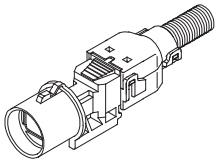
GD2A	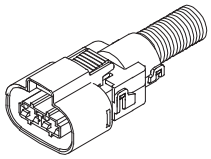	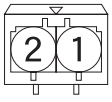 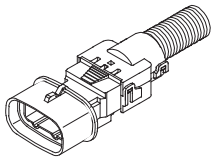
GD3A	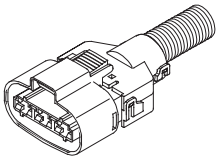 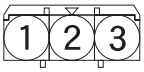	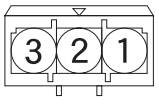 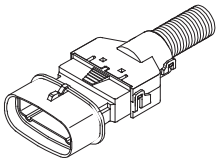
GD3B	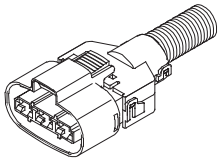 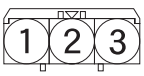	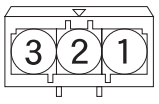 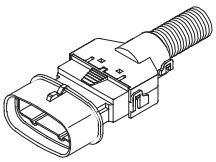

CONNECTOR CONFIGURATION CHART

GE type

Number shows number of pins	Female connector
GE58A	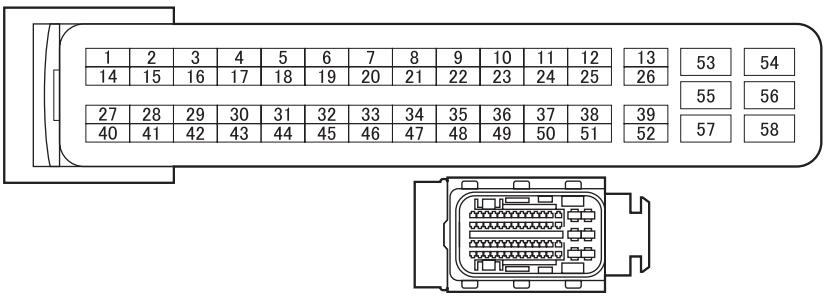
GE96A	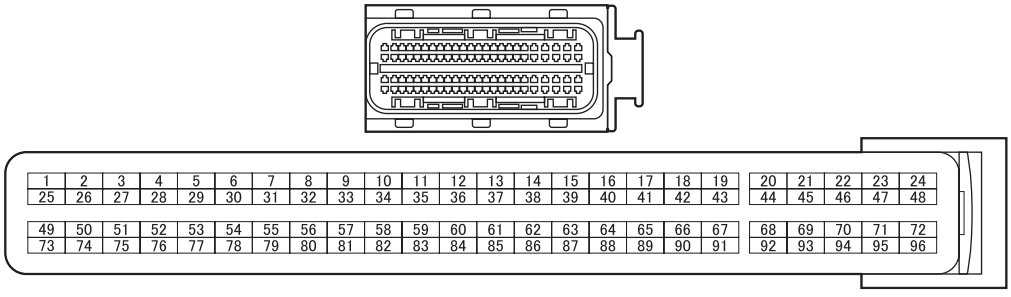

GF type

Number shows number of pins	Female connector	Male connector
GF31A	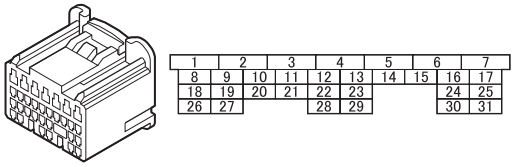	
GF32A	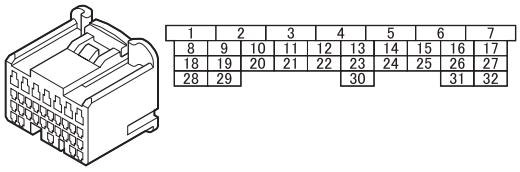	
GF34A	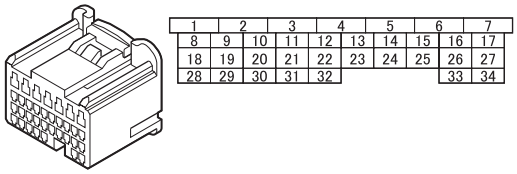	
GF35A	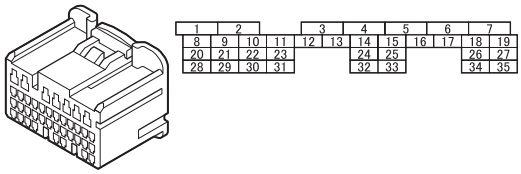	

Number shows number of pins	Female connector	Male connector
GF35B	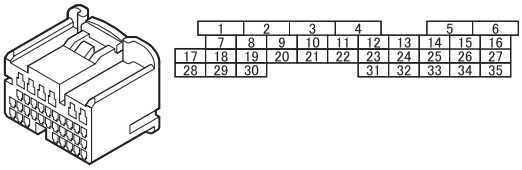	

GG type

Number shows number of pins	Female connector	Male connector
GG12A		
GG16A	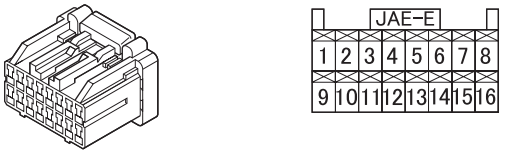	
GG22A	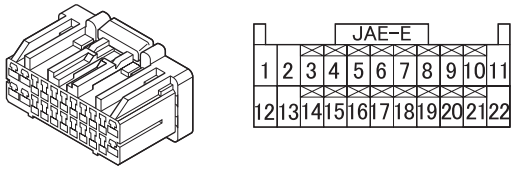	
GG26A	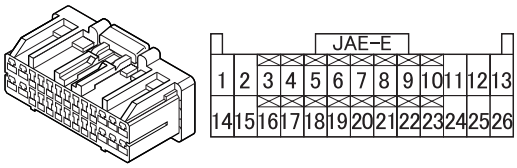	

GH type

Number shows number of pins	Female connector	Male connector
GH3A	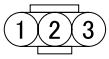	

CONNECTOR CONFIGURATION CHART

GJ type

Number shows number of pins	Female connector	Male connector
GJ2A		
GJ2B	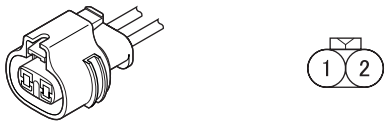	

GK type

Number shows number of pins	Female connector	Male connector
GK7A	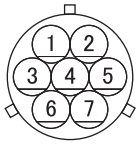	

GL type

Number shows number of pins	Female connector	Male connector
GL2A	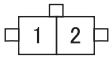	

GM type

Number shows number of pins	Female connector	Male connector
GM2A	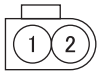	

GN type

Number shows number of pins	Female connector	Male connector
GN2A		

GP type

Number shows number of pins	Female connector	Male connector
GP8A	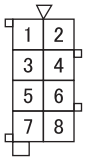	
GP8B	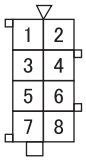	

GQ type

Number shows number of pins	Female connector	Male connector
GQ9A	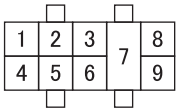	

GR type

Number shows number of pins	Female connector	Male connector
GR13A	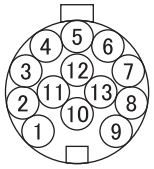	
GR15A	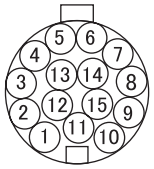	

CONNECTOR CONFIGURATION CHART

GS type

Number shows number of pins	Female connector	Male connector
GS2A	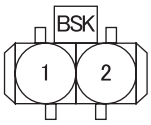	
GS2B	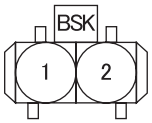	
GS3A	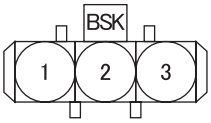	

GT type

Number shows number of pins	Female connector	Male connector
GT24A	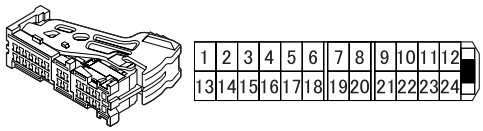	
GT28A	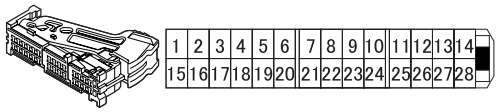	
GT32A	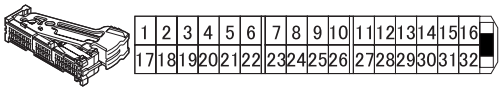	

GV type

Number shows number of pins	Female connector	Male connector
GV12A	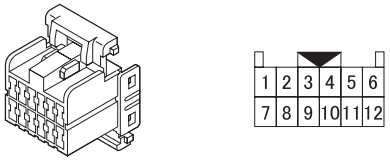	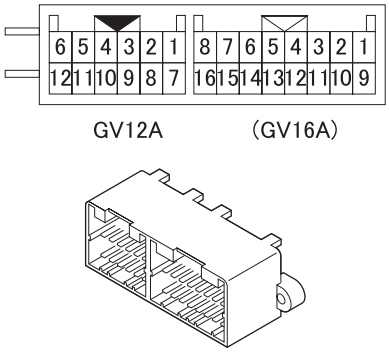
GV16A	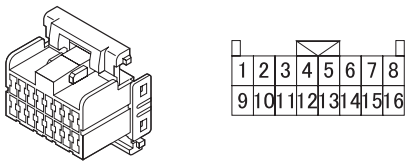	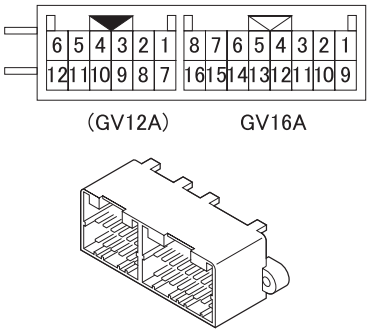
GV20A	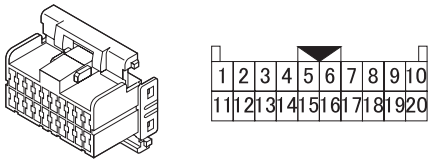	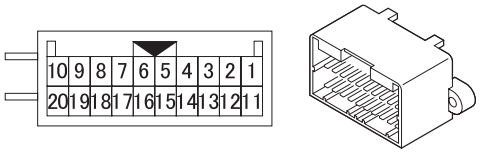

GW type

Number shows number of pins	Female connector	Male connector
GW3A	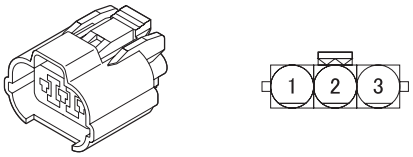	
GW4A	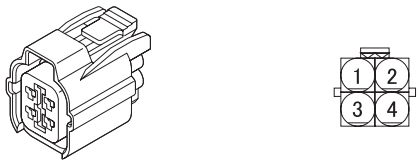	

CONNECTOR CONFIGURATION CHART

GX type

Number shows number of pins	Female connector	Male connector
GX1A	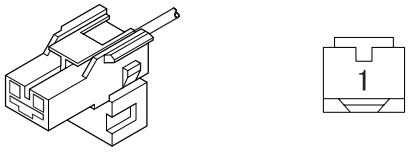	

HB type

Number shows number of pins	Female connector	Male connector
HB4A	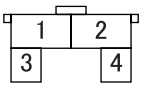	

HC type

Number shows number of pins	Female connector	Male connector
HC11A	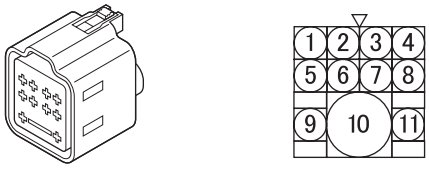	

PC type

Number shows number of pins	Female connector	Male connector
PC4A	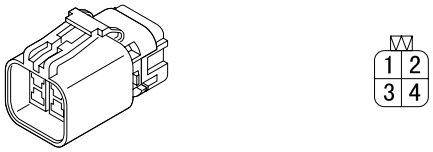	

PE type

Number shows number of pins	Female connector	Male connector
PE12A	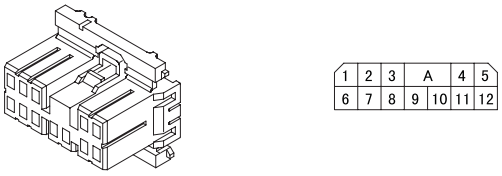	

Number shows number of pins	Female connector	Male connector
PE14A	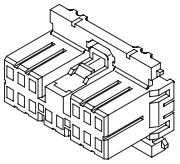 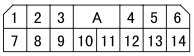	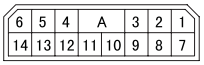 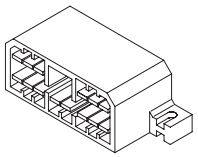 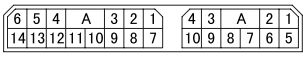 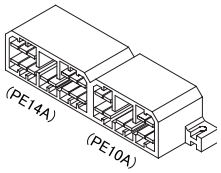

Group 55

Heater, Air-conditioner And Ventilation

Table of Contents

Back

Home

MITSUBISHI FUSO TRUCK OF AMERICA, Inc.

Pub.No.TWSE0713-55

GROUP 55 HEATER, AIR-CONDITIONER AND VENTILATION

SPECIFICATIONS 55-2

STRUCTURE AND OPERATION
1. Heater 55-4
2. Air Conditioner 55-5
3. Air Duct 55-6
4. Heater Control 55-7

TROUBLESHOOTING 55-10

ON-VEHICLE INSPECTION AND ADJUSTMENT
1. Recovery of Refrigerant 55-12
2. Recharging the System with Refrigerant 55-13
3. Checking Refrigerant Charge Level 55-15
4. Adding Refrigerant 55-16

CONNECTING AIR CONDITIONER PIPING 55-17

COMPRESSOR 55-18

CONDENSER, RECEIVER 55-20

HEATER CONTROL 55-22

AIR DUCT 55-26

HEATER AND COOLING UNIT, BLOWER 55-28

SPECIFICATIONS

<Without Air Conditioner>

Item			Specifications
System	Damper change-over system	Mode selection	Manual cable type
		Air mixing	Manual cable type
		Fresh/recirculation changeover	Servomotor
	Servomotor rated voltage V		12
Heater unit	Manufacturer		MITSUBISHI HEAVY INDUSTRIES, LTD.
	Heating capacity W {kcal/h}		4370 ± 437 {3758 ± 376}
	Temperature control system		Air mixing type
Blower	Manufacturer		MITSUBISHI HEAVY INDUSTRIES, LTD.
	Blower motor voltage V		12

<Air Conditioner>

Item			Specifications
System	Type		Manual type air conditioner
	Refrigerant	Type	HFC134a
		Charged quantity g {oz}	650 {22.9}
	Damper change-over system	Mode selection	Manual cable type
		Air mixing	Manual cable type
		Fresh/recirculation changeover	Servomotor
	Servomotor rated voltage V		12
Heater and cooling unit	Manufacturer		MITSUBISHI HEAVY INDUSTRIES, LTD.
	Heating capacity W {kcal/h}		4370 ± 437 {3758 ± 376}
	Cooling capacity W {kcal/h}		4340 ± 434 {3732 ± 373}
	Temperature control system		Air mixing type
Blower	Manufacturer		MITSUBISHI HEAVY INDUSTRIES, LTD.
	Blower motor voltage V		12
Compressor	Manufacturer		MITSUBISHI HEAVY INDUSTRIES, LTD.
	Model		MSC90TA
	Discharge cm^3 {mL}/1 rotation		90 {90}
	Lubricant	Type	SUN PAG56
		Quantity cm^3 {cu.in.}	$120\ ^{+20}_{0}$ {$7.32\ ^{+1.22}_{0}$}
Condenser	Manufacturer		MITSUBISHI HEAVY INDUSTRIES, LTD.
	Rated current A		$9.5\ ^{+1.8}_{-2.0}$
Receiver	Manufacturer		MITSUBISHI HEAVY INDUSTRIES, LTD.
	Capacity cm^3 {cu.in.}		350 {21.4}

1. Heater

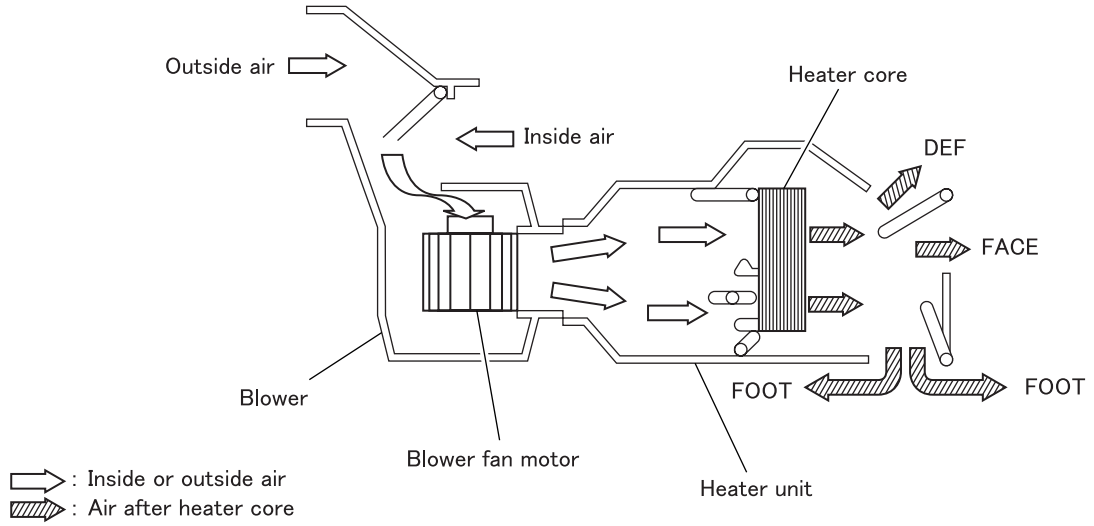

P56487E

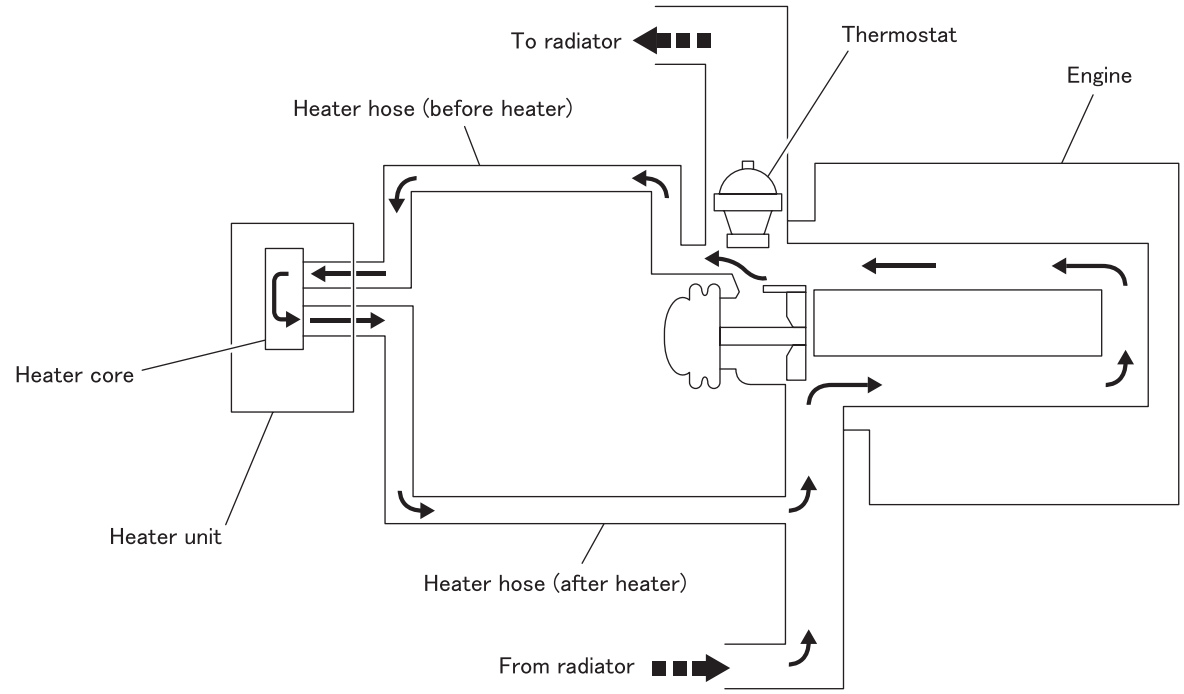

P11955E

- The blower sends air to the heater unit, where the air is heated by the heater core (heat exchanger). The warmed-up air is then sent through the ducts into the cab.
- Water (engine coolant) warmed up by the heat from the engine circulates permanently through the heater core, irrespective of whether the thermostat is open or closed.

2. Air Conditioner

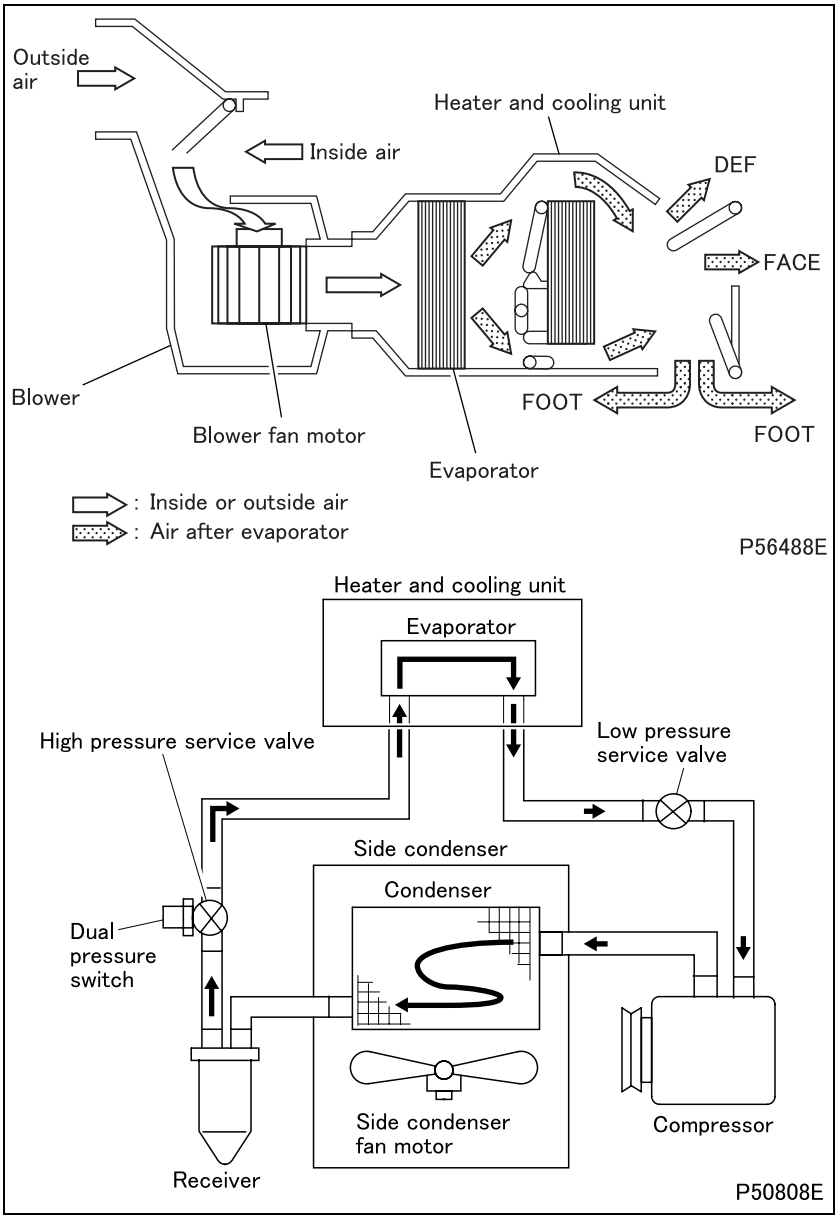

- The blower sends air to the heater and cooling unit, where the air is cooled by the evaporator. The cooled air is then sent through the ducts into the cab.
- Refrigerant in gas form is compressed by the compressor. The compressed gas is then sent to the side condenser, where it is cooled by outside air and condenses into liquid form.
- The liquid refrigerant is sprayed into the evaporator, where it quickly evaporates into gas form while at the same time absorbing heat from the surrounding air.
- The refrigerant in gas form is again sent to the compressor and is compressed there.
- When the refrigerant pressure in the high pressure line reaches the specified limit, the dual pressure switch senses this and turns itself OFF. At the same time, the magnet clutch is turned OFF.

3. Air Duct

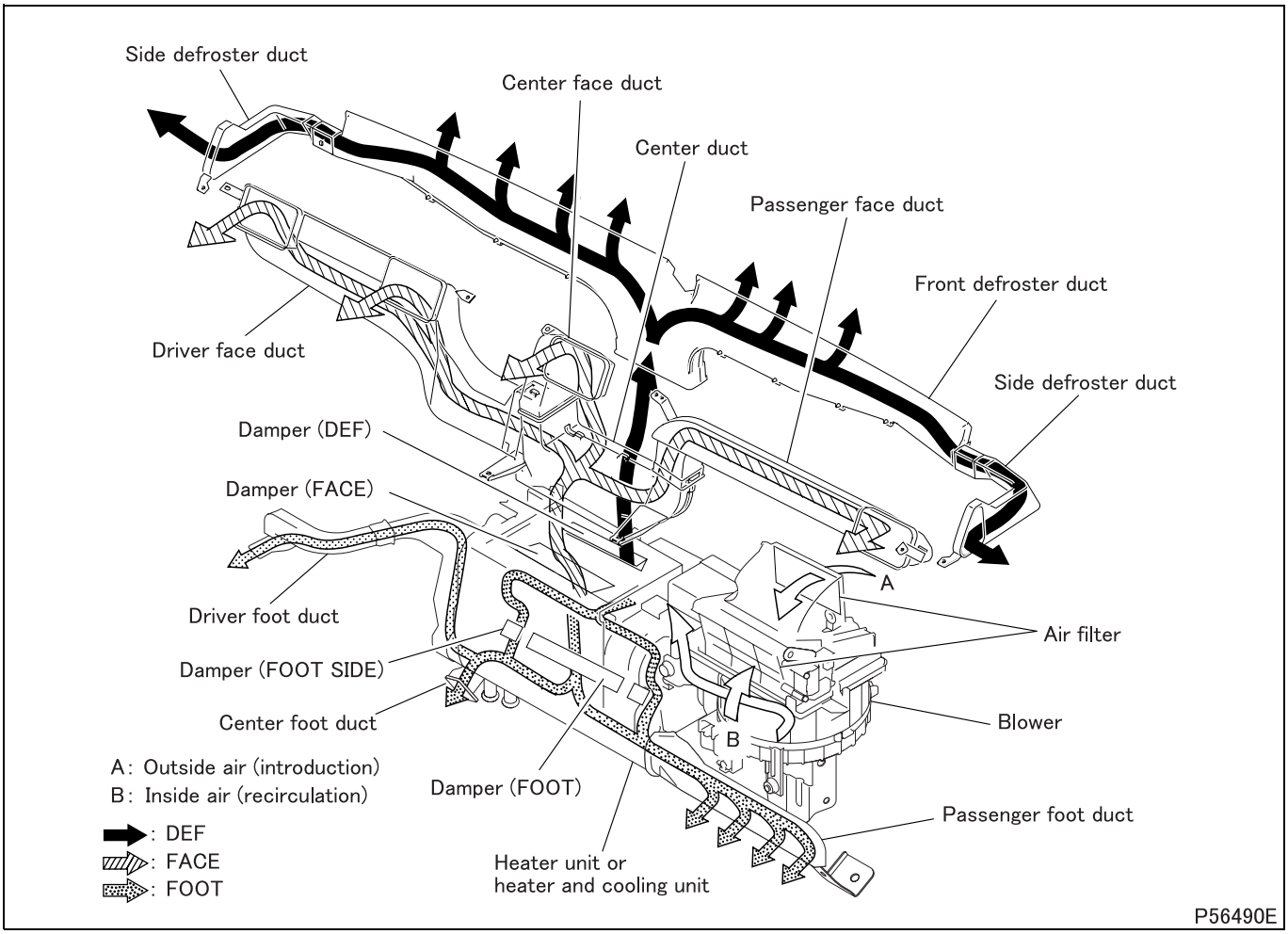

- The blower sends outside air A or inside air B through the heater unit or heater and cooling unit to the ducts. The flow of air is dependent on the open/closed positions of the various dampers.

4. Heater Control

4.1 Mode selection

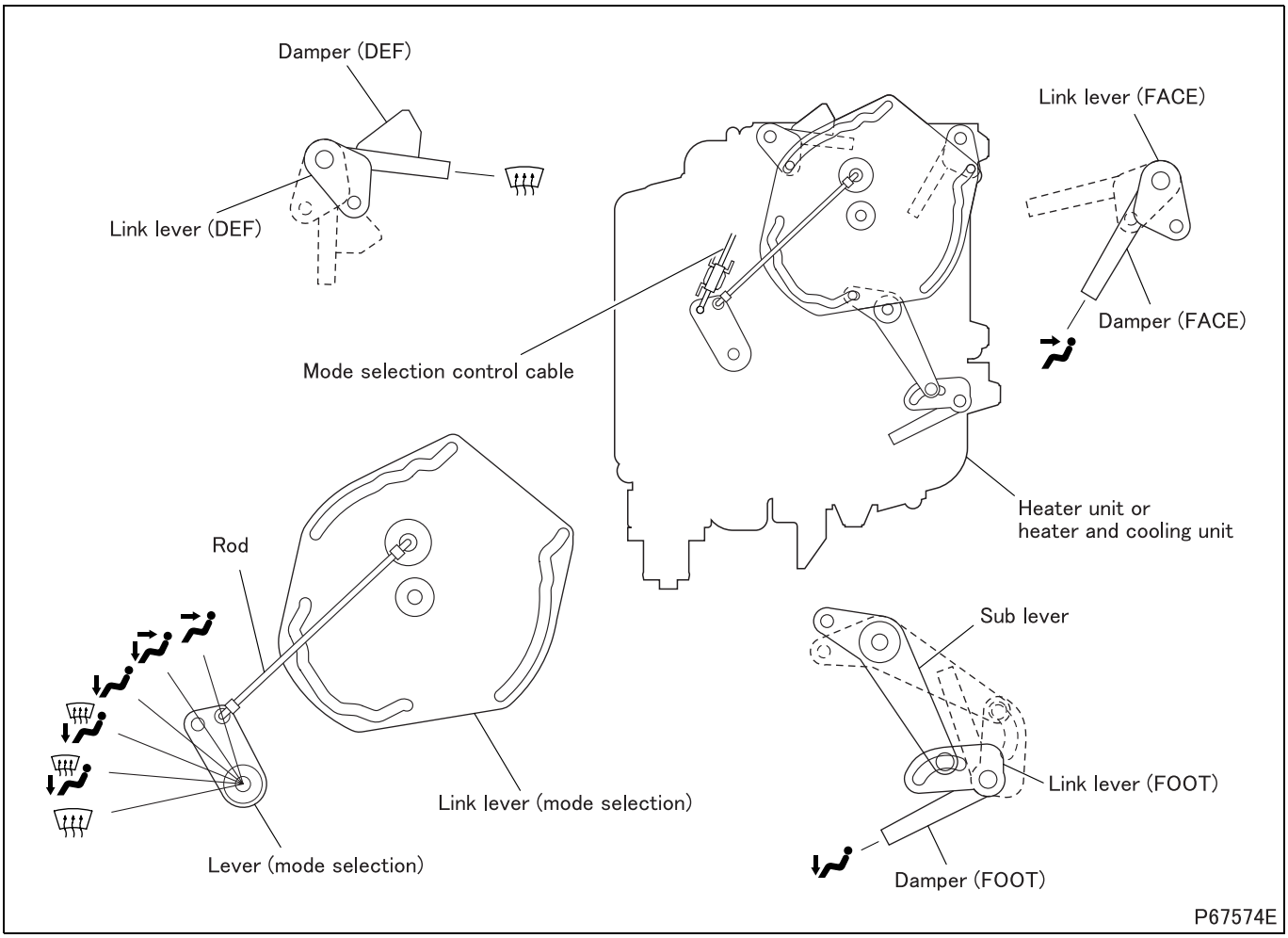

- Mode selection (opening/closing the dampers) is achieved by the operation of the mode selection control cables and the resultant movement of the related parts linked to the cables.

4.2 Air mix selection

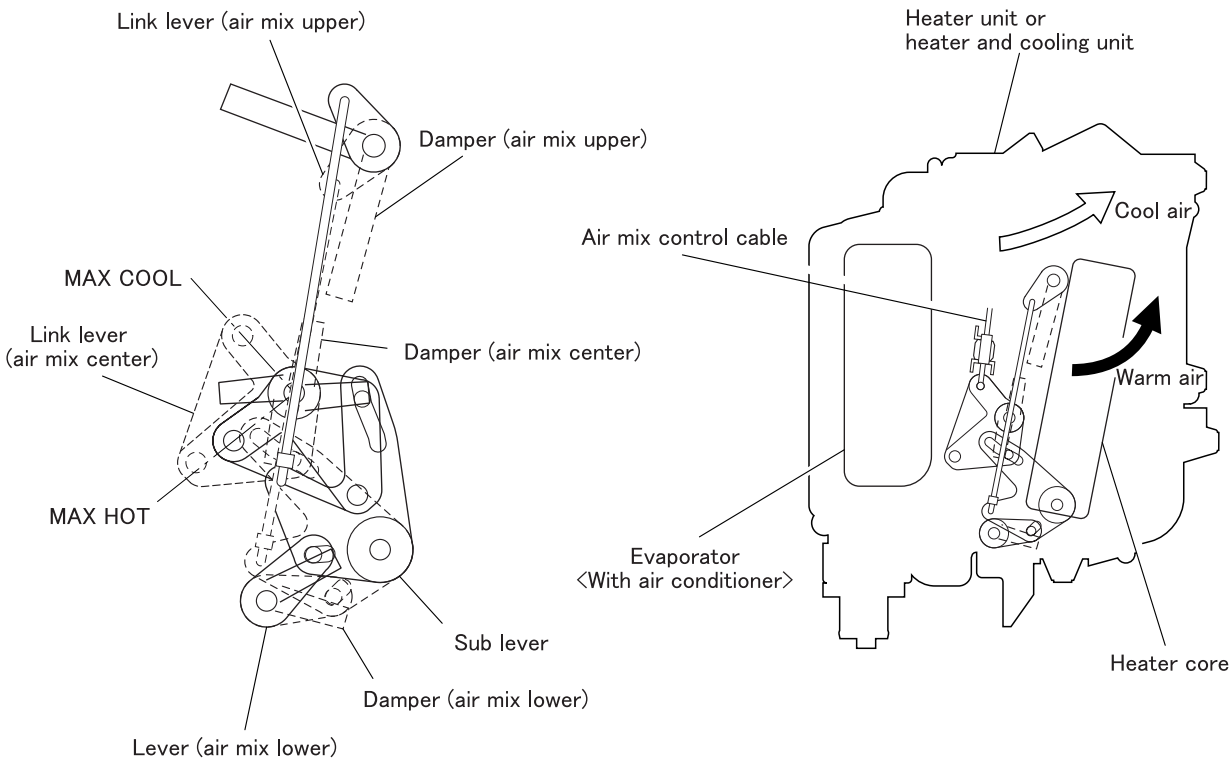

- Air mix selection is achieved by controlling the positions of the dampers, thereby proportioning the volumes of warm and cool air that is and is not sent through the heater core.

4.3 Fresh/recirculation changeover

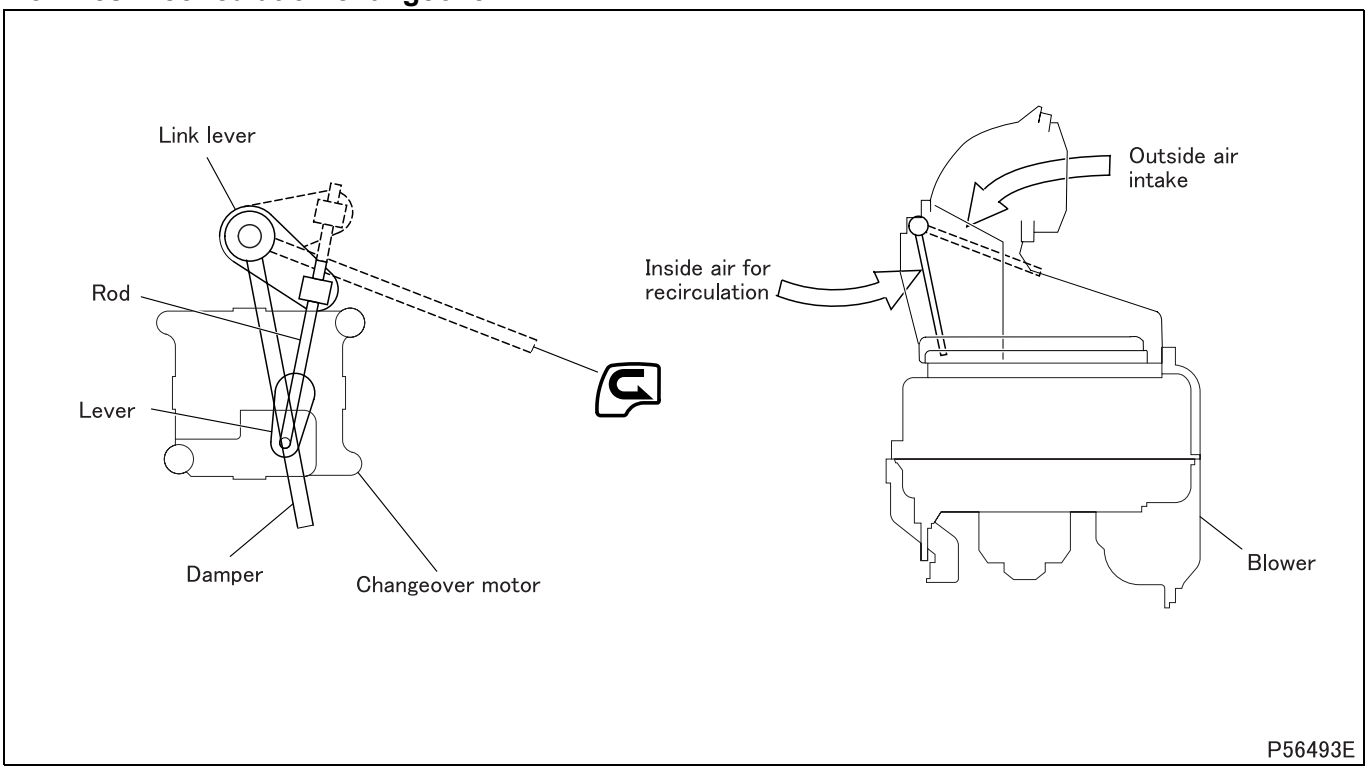

- The fresh/recirculation changeover damper is operated by means of motor.

Heater, Front Air Conditioner

Symptoms / Possible causes	No air from vents	Poor cooling	Poor heating	No mode selection	Draft from vents	No temperature setting	No fresh/recirculation selection	Air volume from vents unstable	Controls require too much effort	Reference Gr
Blower motor coil open, shorted	O									Gr54
Blower motor relay contacts stuck closed, coil open, shorted	O									
Blower resistor malfunction								O		
Compressor seized, malfunction <A/C>		O								
Refrigerant charge low <A/C>		O					O			
Air conditioner relay contacts stuck closed, coil open, shorted <A/C>		O								
Mode damper malfunction, not fully closed				O	O				O	
Air mix damper malfunction, not fully closed					O	O			O	
Fresh/recirculation selection motor coil open, shorted							O			Gr54
Fresh/recirculation selection damper malfunction, not fully closed					O		O		O	
Condenser fan motor coil open, shorted <A/C>		O								Gr54
Condenser relay contacts stuck closed, coil open, shorted <A/C>		O								
Dual pressure switch coil open, shorted <A/C>		O								
Heater control malfunction	O	O	O	O	O	O	O			
Thermostat stays open			O							Gr14
Coolant level low			O							
Connector poor contact, harness open, faulty earth	O	O		O	O	O	O			Gr54
Fuse blown	O	O								
Air conditioner piping clogged, loose, incorrectly connected <A/C>		O								
Heater piping clogged, loose, incorrectly connected			O							
Duct incorrectly connected					O					
Heater and cooling unit clogged			O							
Condenser clogged <A/C>		O								
Condenser core restricted, accumulation of foreign matter <A/C>		O								
Receiver clogged, inefficient desiccant <A/C>		O								
Evaporator clogged <A/C>		O								
Control wire jammed, incorrectly installed				O	O		O		O	
Lever bent				O	O		O		O	
Lever sliding section worn, out of grease				O	O		O		O	

<A/C>: Air conditioner

M E M O

1. Recovery of Refrigerant

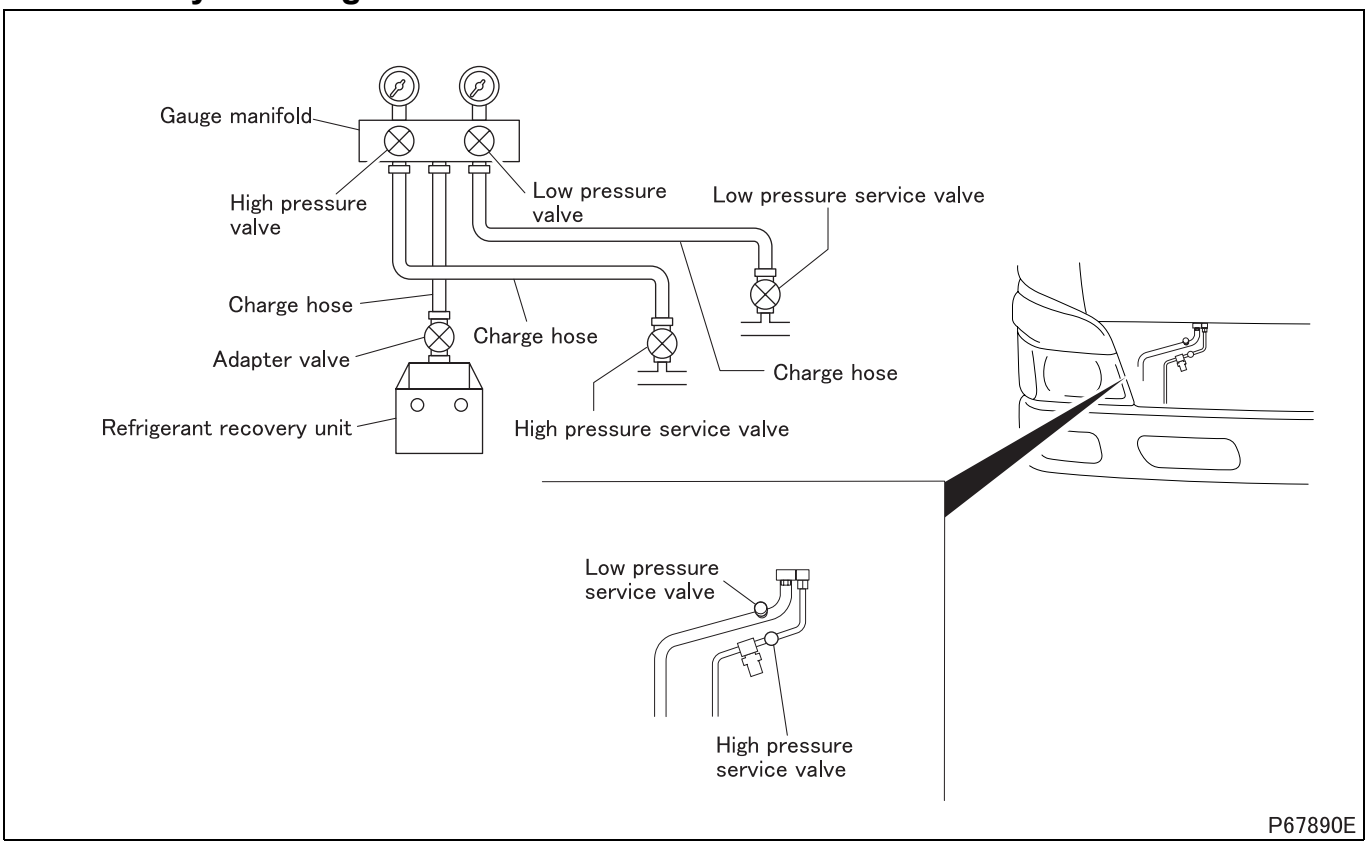

- Recover refrigerant from the air conditioning system in accordance with the following flow chart.
  - Installation of the refrigerant recovery unit

↓

Close both the low pressure and high pressure valves.

↓

Connect the charge hose to the low pressure service valve.

↓

Connect the charge hose to the high pressure service valve.

↓

Connect the charge hose to the adapter valve.

↓

Open both the low pressure and high pressure valves.

↓

Open the adapter valve.

↓

Run the recovery unit to collect the refrigerant.

2. Recharging the System with Refrigerant

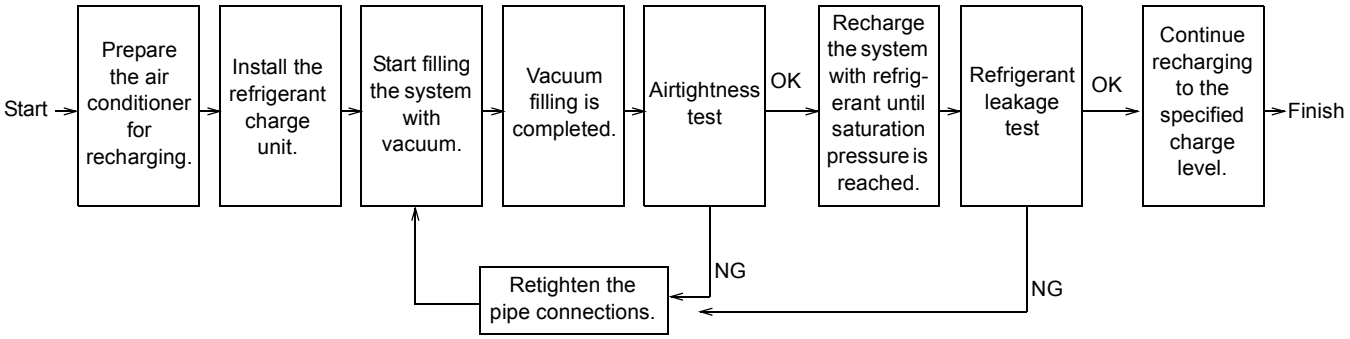

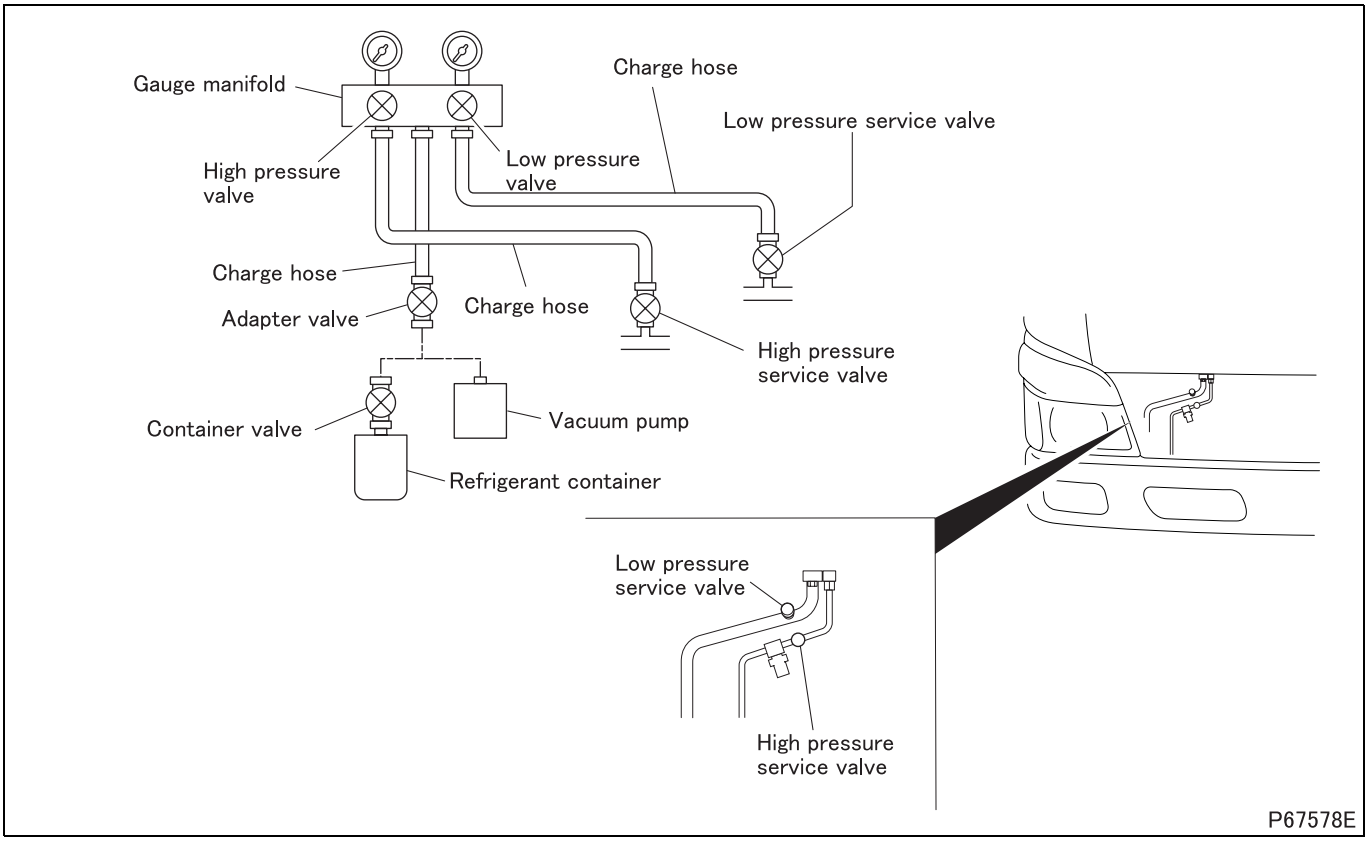

- Recharge the system with refrigerant in accordance with the following flow chart.
  - Installation of the refrigerant charge unit

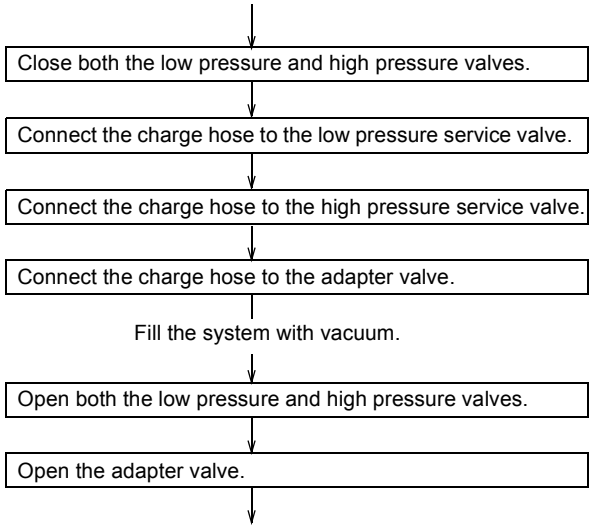

Run the vacuum pump.

Continue to run the pump for a minimum of 10 to 15 minutes. Close the adapter valve.

Stop the vacuum pump.

CAUTION ⚠

- **Make sure that the adapter valve is closed before stopping the vacuum pump.**

Close both the low pressure and high pressure valves.

Wait for 5 minutes. During this interval, the readings on the gauges installed on the gauge manifold should stay where they are and should not move towards zero.

Vacuum filling is now completed.

Recharging the system with refrigerant

With the adapter valve still closed, remove it from the vacuum pump. Connect the valve to the refrigerant container via the container valve.

Open the container valve and then the adapter valve.

Open the low pressure valve to fill refrigerant in gas form.

CAUTION ⚠

- **Filling refrigerant into the system in liquid form may damage the compressor. To prevent this, keep the refrigerant container in the upright position so that refrigerant is filled in gas form.**

When the refrigerant container is empty, close the adapter valve and install a new container. Continue filling the system.

When the air conditioning system is saturated, start the engine. Turn on the air conditioner to run the compressor, and continue recharging until the specified charge level is reached.

3. Checking Refrigerant Charge Level

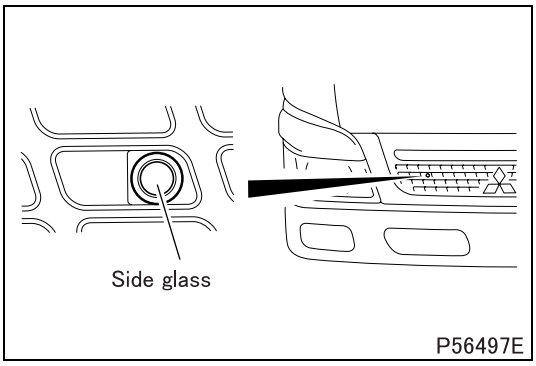

- To check the refrigerant charge level, observe the flow of refrigerant through the sight glass. If the visual inspection indicates a low charge level, add refrigerant.
- The visual check should be performed under the following conditions.
  - Engine speed: 1400 rpm
  - Air conditioner switch: ON
  - Fan speed control dial: 4 (MAX)
  - Temperature control dial: MAX COOL
  - Ventilation/recirculation changeover switch: Indicator lamp in the switch (OFF: Ventilation)
  - Doors: Fully open

CAUTION ⚠

- **Never run the air conditioner with no or low level of refrigerant. Failure to observe this will damage the compressor.**

	Normal level	Low level	No refrigerant
Sight glass	P06554 With a careful look, something like mist can be seen flowing.	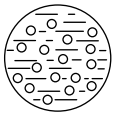 P06553 Air bubbles are seen flowing at all times. The refrigerant may be transparent or whitish.	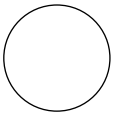 P06552 The refrigerant is almost transparent. Air bubbles may be seen flowing, but they disappear when the engine is revved up and down.
High/low pressure piping	The high pressure piping is hot while the low pressure piping is cold.	The high pressure piping is warm while the low pressure piping is slightly cold.	There is almost no difference in temperature between the high and low pressure piping.

4. Adding Refrigerant

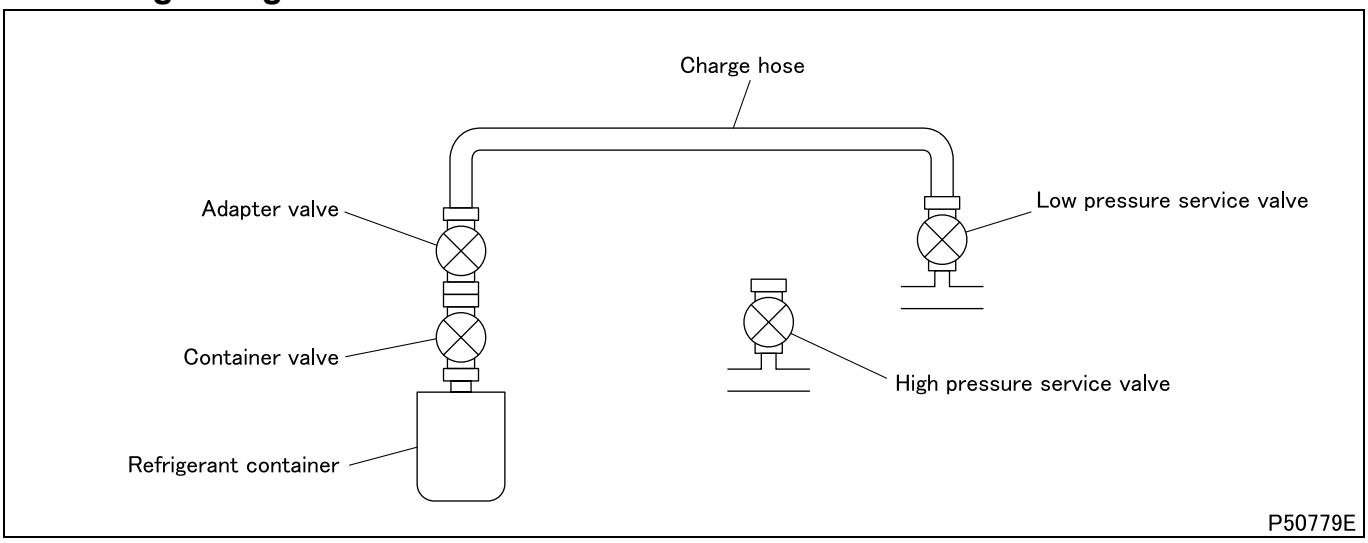

- Add refrigerant in accordance with the following flow chart.

With the adapter valve closed, connect the charge hose to the low pressure service valve.

CAUTION ⚠

- **If the charge hose is connected to the high pressure service valve, refrigerant may flow back, possibly damaging the refrigerant container and charge hose.**

Open and close the adapter valve to bleed air of the charge hose.
After air bleeding is completed, close the adapter valve.

Take the refrigerant container and valve assembly. With the container valve closed, connect the assembly to the adapter valve.

CAUTION ⚠

- **Filling refrigerant into the system in liquid form may damage the compressor. To prevent this, keep the refrigerant container in the upright position so that refrigerant is filled in gas form.**

Open the container valve and then the adapter valve.

Start the engine.

Set the temperature control to MAX COOL. Turn on the air conditioner to run the compressor.

Continue adding refrigerant while observing the sight glass for charge level.

When “normal level” is confirmed through the sight glass, add refrigerant further 50 g {1.76 oz}.

When charging is completed, close the adapter and container valves. Remove the charge hose and the refrigerant container from the low pressure service valve.

If there is still some refrigerant in the container, keep it for the next opportunity. Be sure to keep the container valve closed.

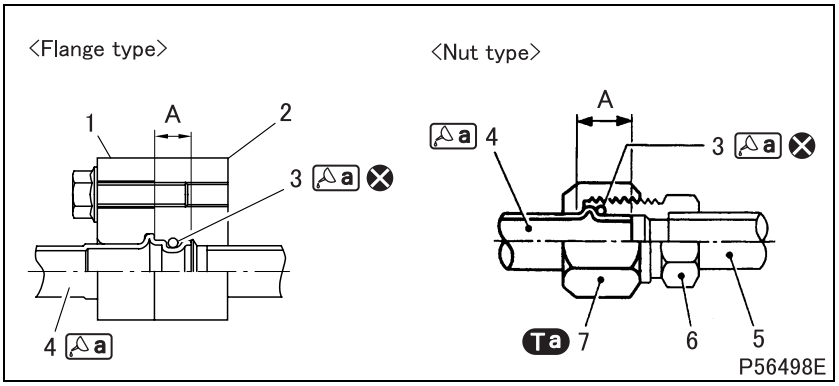

1 Flange (pipe end) <Flange type>
2 Flange (mating end) <Flange type>
3 O-ring
4 Pipe
5 Pipe <Nut type>
6 Union <Nut type>
7 Nut <Nut type>

A: Refrigerating machine oil application area
⊗: Non-reusable parts

Tightening torque (Unit: N·m {kgf·m})

Mark	Parts to be tightened	Tightening torque	Remarks
Ta	Nut	11.8 to 14.7 {1.2 to 1.5}	–

Lubricant and/or sealant

Mark	Points of application	Specified lubricant and/or sealant	Quantity
a	O-ring	Refrigerating machine oil SUN PAG56	As required
	Outer periphery of pipe end (area A)		

- There are 2 types of air conditioner pipe/hose connections: flange type and nut type. When connecting/tightening the connections, observe the following precautions.

CAUTION ⚠

- **The connected parts are sealed by the O-ring. Be careful not to damage the O-ring, such as by twisting.**
- **The O-rings are exclusively designed for HFC-134a refrigerant and are not reusable. The O-rings are available at the MITSUBISHI HEAVY INDUSTRIES, LTD. service stations.**
- **Never tighten the nut-type connection by rotating the union. This will deform the piping, allowing refrigerant to leak out. Tighten by rotating the nut while holding the union in position.**

COMPRESSOR

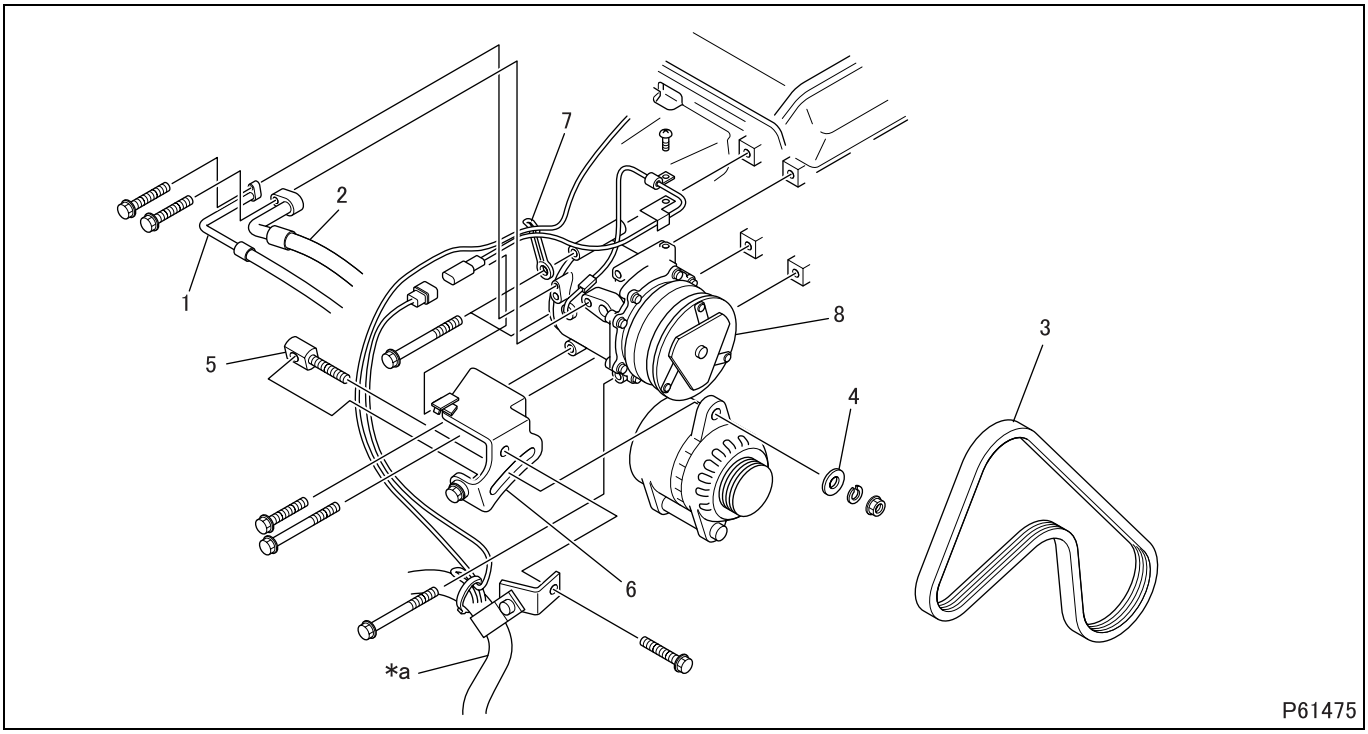

● **Removal sequence**

1 Discharge hose (high pressure side)
2 Suction hose (low pressure side)
3 Belt
4 Spacer
5 Shaft
6 Adjusting plate
7 Clamp
8 Compressor

***a**: Vehicle harness

● **Installation sequence**

Follow the removal sequence in reverse.

- After installation, tension the belt to specification. (See Gr14.)
- See the CONNECTING AIR CONDITIONER PIPING section for the installation of hose.

◆Inspection procedure◆

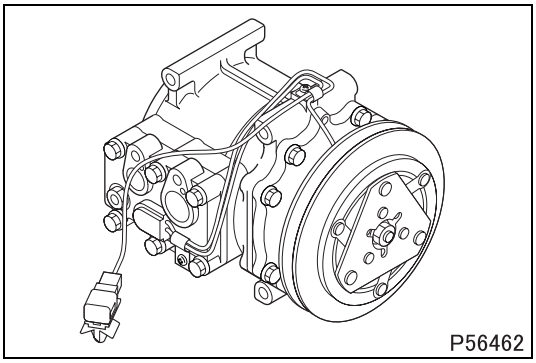

■ Inspection: Compressor

- Check the compressor proper for malfunction and oil leakage.
- If there is anything wrong with the compressor, replace it or have it overhauled at a nearest MITSUBISHI HEAVY INDUSTRIES, LTD. service station.

CONDENSER, RECEIVER

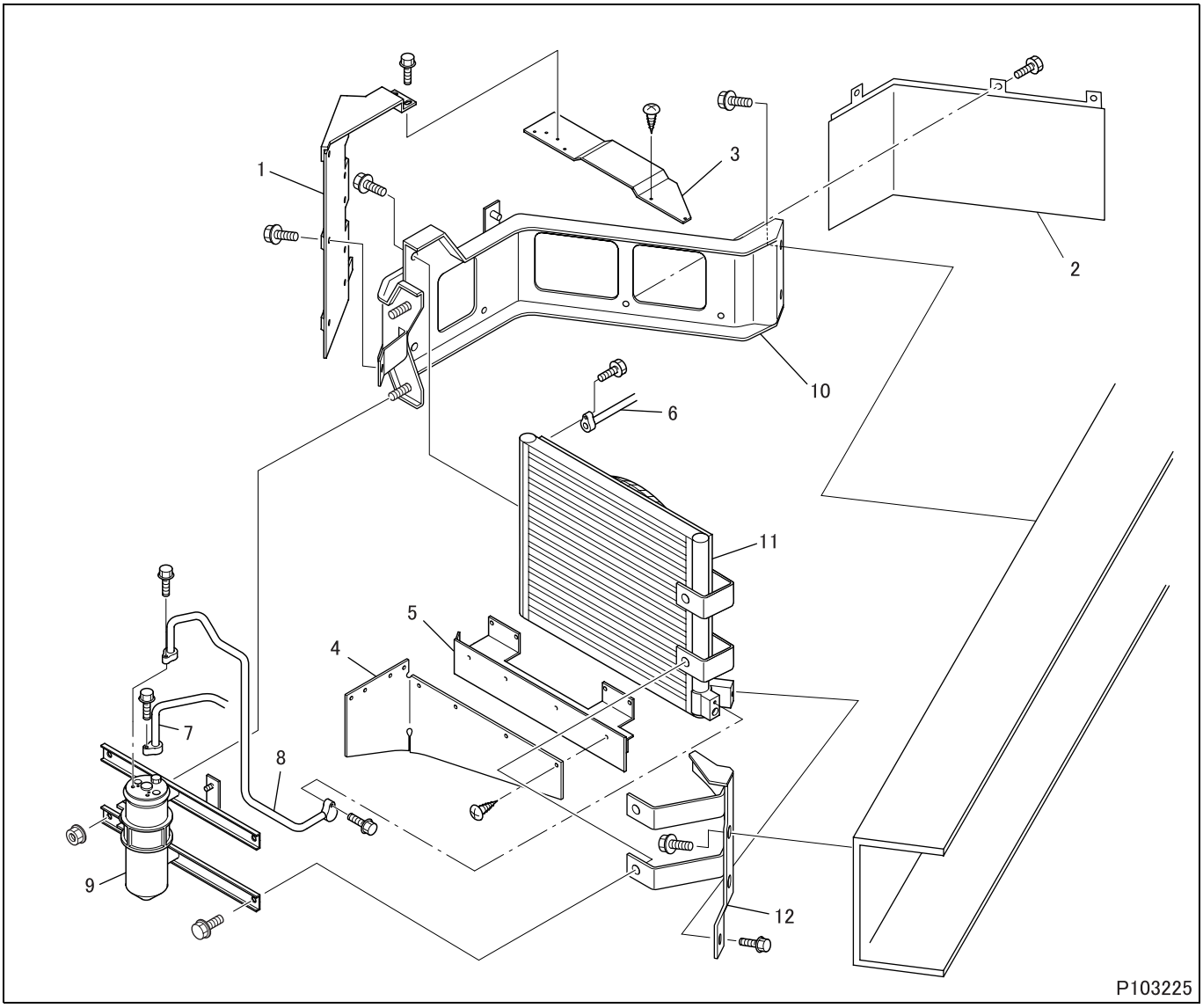

● **Removal sequence**

1 Baffle plate
2 Intercept plate
3 Baffle plate (upper)
4 Eva plate
5 Baffle plate (lower)
6 Discharge hose (compressor end)
7 Liquid hose (heater and cooling unit end)
8 Liquid pipe
9 Receiver
10 Condenser rear bracket
11 Condenser
12 Condenser front bracket

● **Installation sequence**

Follow the removal sequence in reverse.

- See the CONNECTING AIR CONDITIONER PIPING section for the installation of hose and pipe.

◆Inspection procedure◆

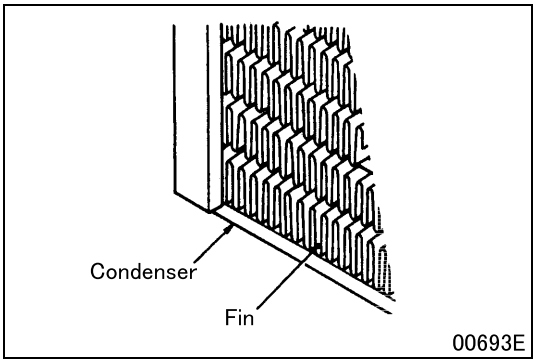

■ Inspection: Condenser

- If the condenser fins are clogged with dirt, dust or other foreign matter, wash it out. Any deformed fins should be straightened using a spatula or the like.

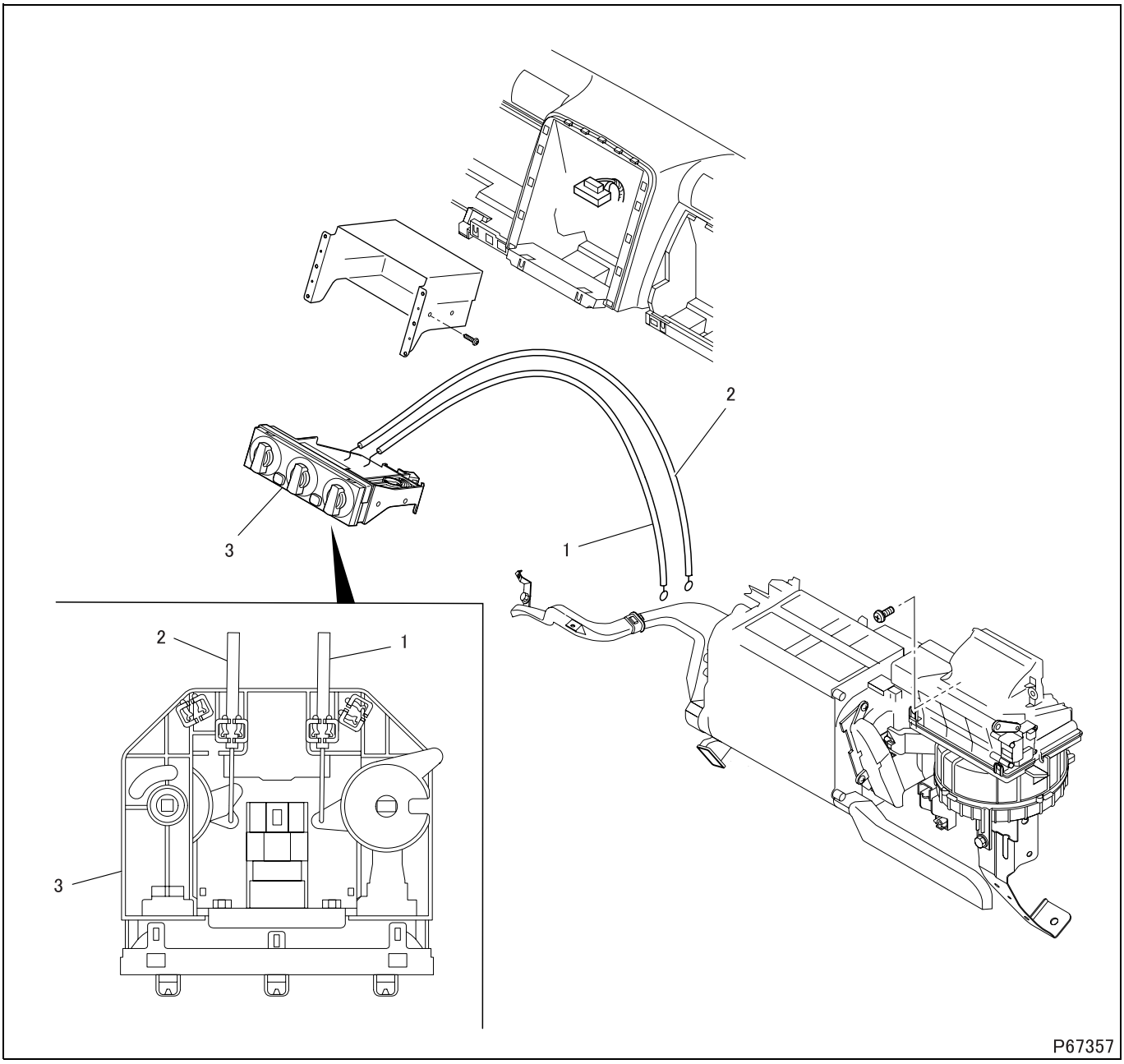

● **Removal sequence**

1 Air mix control cable (BLACK)
2 Mode selection control cable (NATURAL)
3 Heater controls

CAUTION ⚠

- **Never remove the cable(s) from the heater controls except when the control cable(s) needs to be replaced. Failure to observe this may damage the claws of the cable clip.**

● **Installation sequence**

Follow the removal sequence in reverse.

◆Work before removal◆

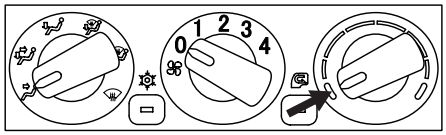

P65915

■ **Adjustment: Temperature control knob**

- Before disconnecting the control cables, turn the temperature control knob of the heater controls to the MAX-COOL position.

◆Removal procedure◆

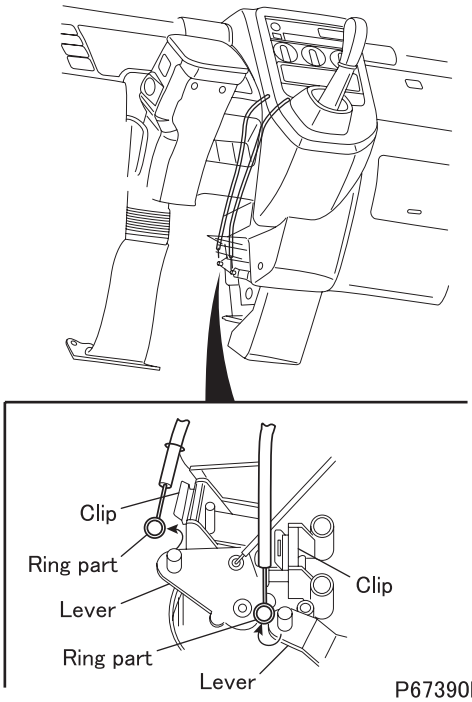

P67390E

■ **Removal: Control cables**

- Before disconnecting the cables from the levers, put pairing marks on each cable and its lever.
- Disconnect the control cables from the heater unit.

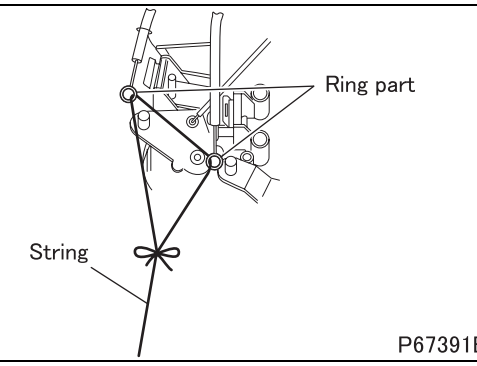

P67391E

- In order that the control cables can be pulled back at the time of installation, attach string to the ring parts of the cables as shown in the illustration.

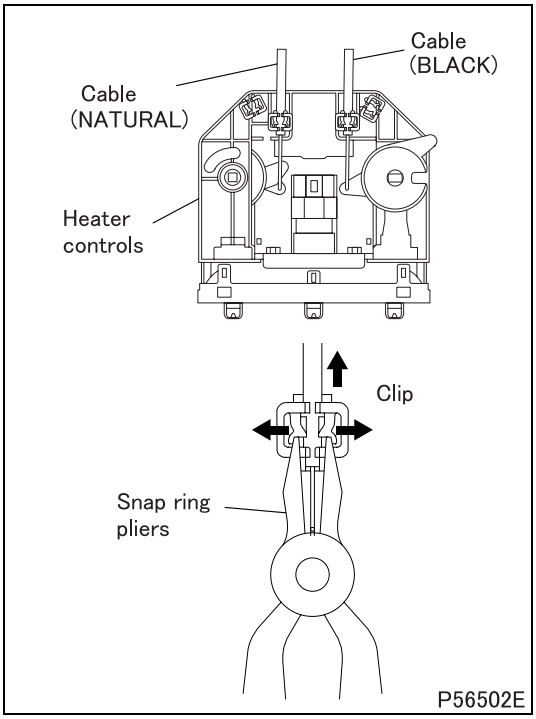

- Remove the heater controls from the instrument panel.
- Use snap ring pliers to disconnect the cable(s) from the heater controls.

◆Work before installation◆

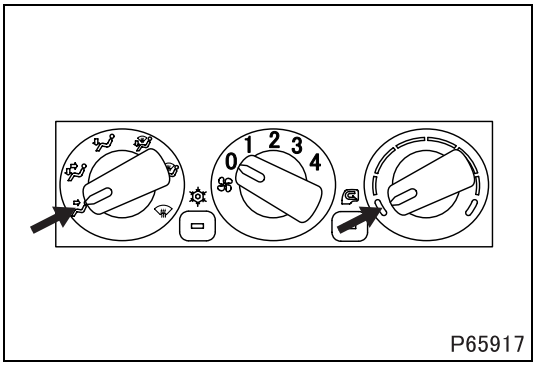

■Adjustment: Heater controls knobs

- At the heater controls, turn the temperature control knob to the MAX-COOL position and turn the mode selector knob to the face position before reconnecting the control cables.

◆Installation procedure◆

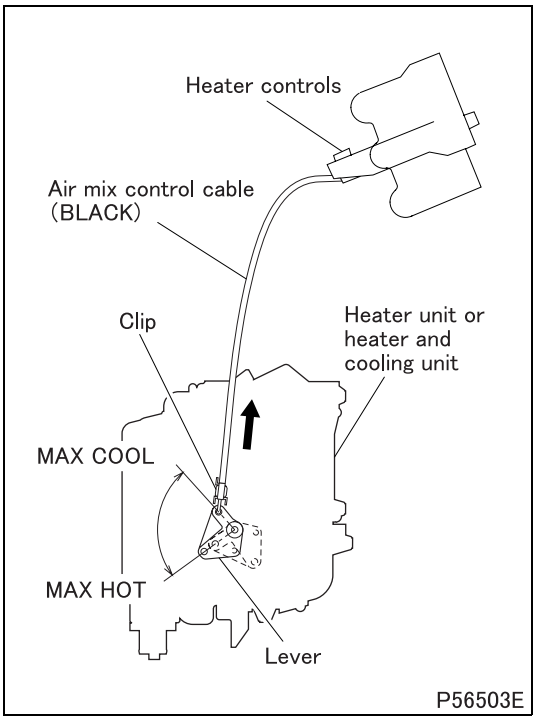

■ Installation: Air mix control cable

- Install one end of the air mix control cable to the heater control unit.
- Set the unit's temperature control dial to MAX COOL.
- Pull back the control cable using the string attached at the removal procedure.
- Install the other end of the air mix control cable to the lever on the heater unit or heater and cooling unit.
- With the air mix control cable connected to the lever, pull the cable in the direction of the arrow to move the lever to MAX COOL (upper) position. Clip the cable into the position.
- Move the temperature control knob to MAX COOL and MAX HOT. Make sure that the lever moves to the corresponding MAX COOL and MAX HOT positions. If not, repeat the above sequence to correctly install the cable. Also, make sure that the cable being installed is in the correct color.

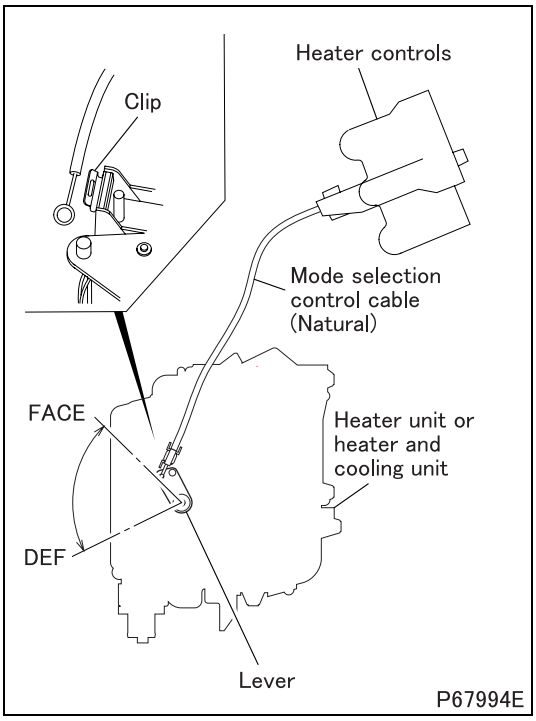

■ Installation: Mode selection control cable

- Install one end of the mode selection control cable to the heater controls.
- Set the controls' mode control dial to FACE.
- Pull back the control cable using the string attached at the removal procedure.
- Install the other end of the mode selection control cable to the lever on the heater unit or heater and cooling unit.
- With the mode selection control cable connected to the lever, and push the cable into the clip.
- Move the mode control knob to FACE and DEF. Make sure that the lever moves to the corresponding FACE and DEF positions. If not, repeat the above sequence to correctly install the cable. Also, make sure that the cable being installed is in the correct color.

AIR DUCT

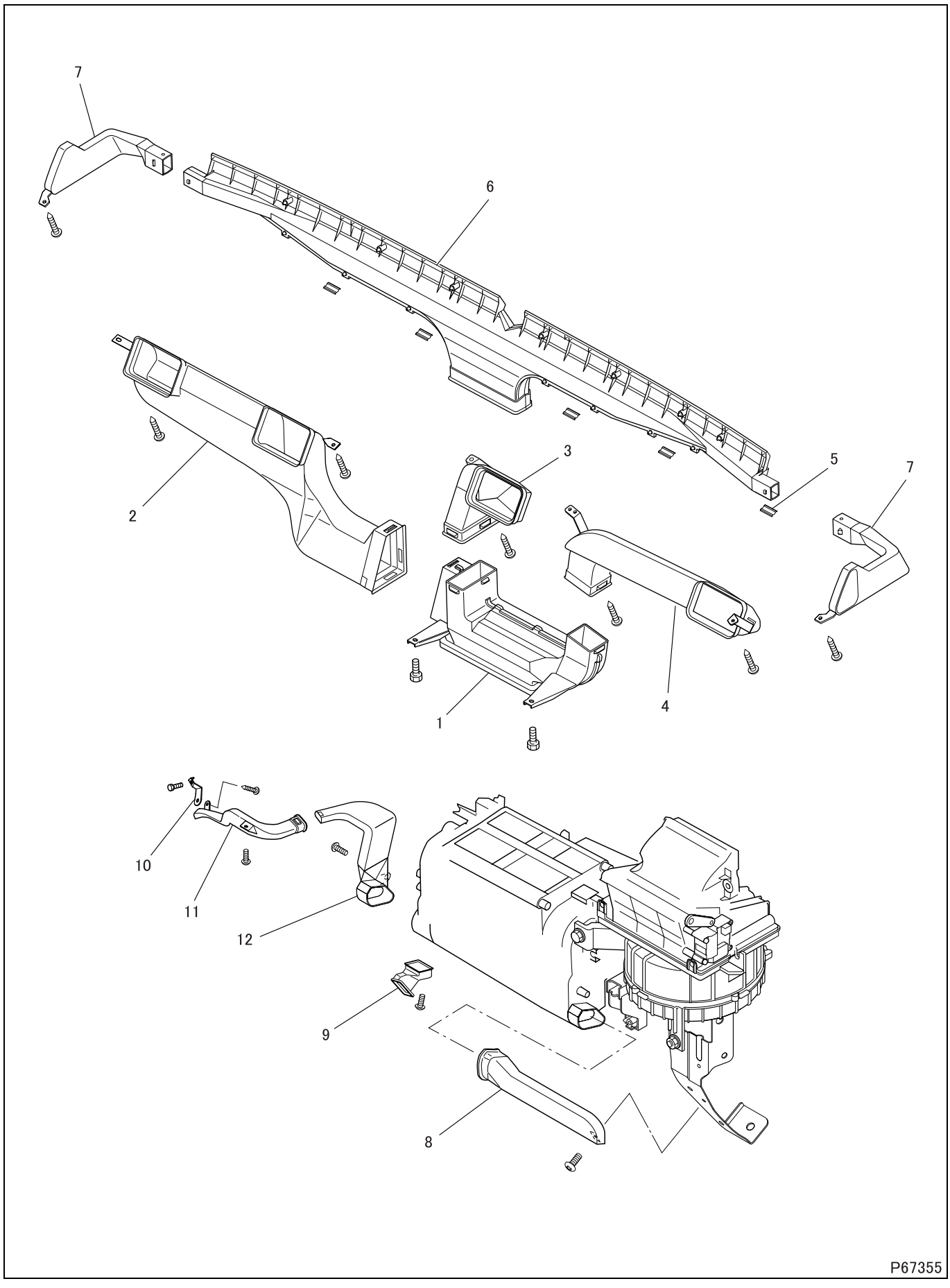

● Removal sequence

1 Center duct
2 Driver face duct
3 Center face duct
4 Passenger face duct
5 Clip (× 7)
6 Front defroster duct
7 Side defroster duct
8 Passenger foot duct
9 Center foot duct
10 Foot duct bracket
11 Driver foot duct B
12 Driver foot duct A

● Installation sequence

Follow the removal sequence in reverse.

◆Installation procedure◆

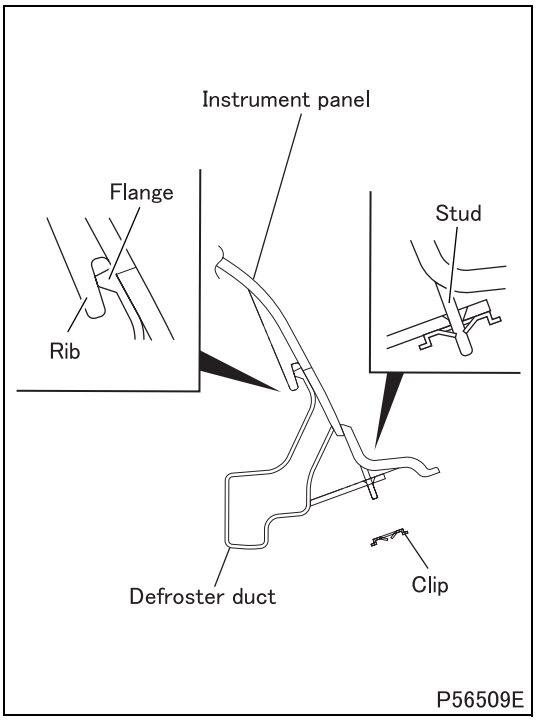

■ **Installation: Front defroster duct**

- Insert the front defroster duct flanges into the instrument panel ribs.
- Insert the instrument panel studs into the front defroster duct holes and clip them together.

HEATER AND COOLING UNIT, BLOWER

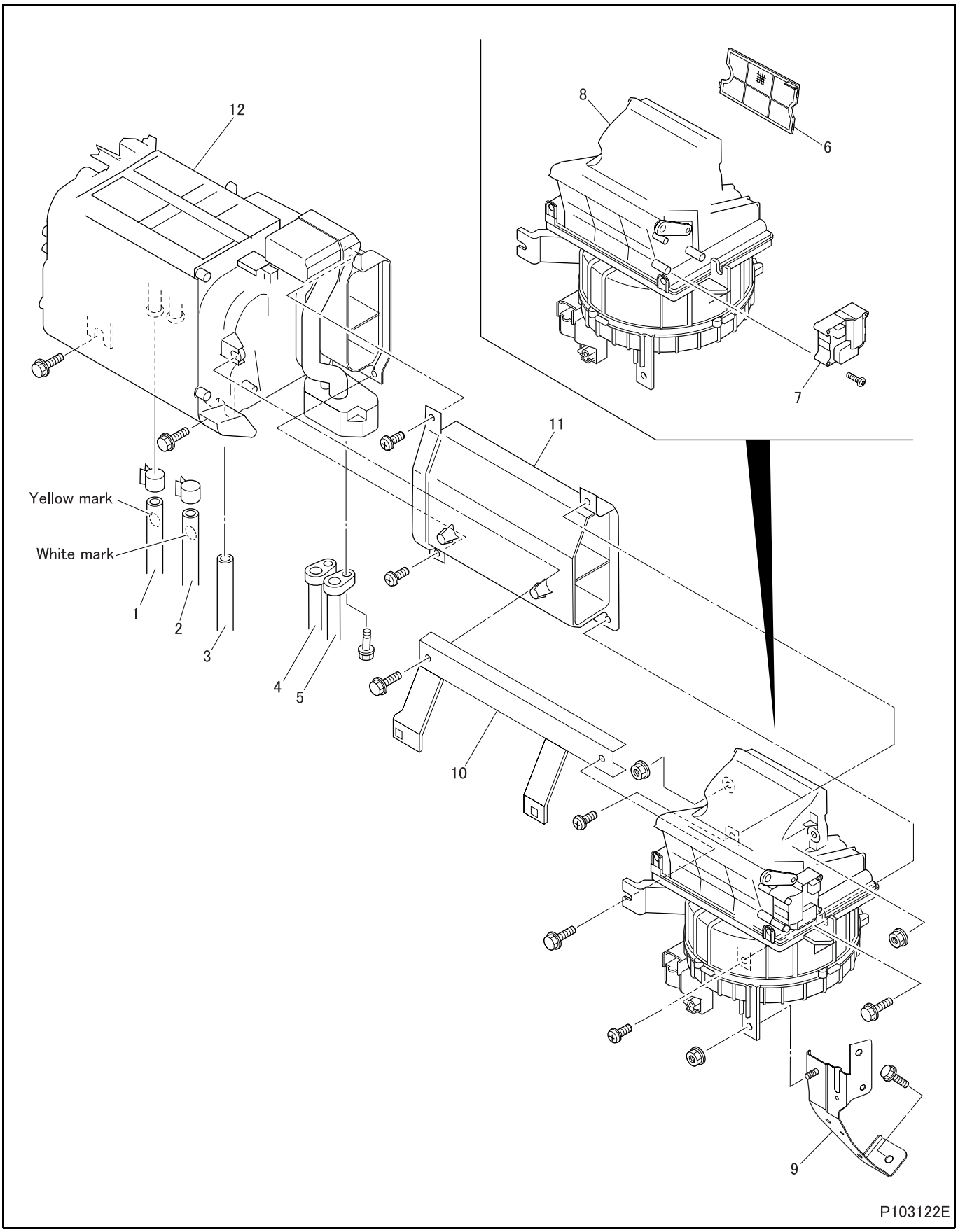

● Removal sequence

1 Heater hose (outlet)
2 Heater hose (return)
3 Drain hose
4 Discharge hose (high pressure)
5 Suction hose (low pressure)
6 Air filter
7 Fresh/recirculation changeover motor
8 Blower
9 Bracket
10 Bracket
11 Joint duct
12 Heater and cooling unit (See later sections.)

- Remove the front grill before removing hoses. (See Gr51.)
- Drain coolant out of the radiator when removing the heater hoses. (See Gr14.)

● Installation sequence

Follow the removal sequence in reverse.

- See the CONNECTING AIR CONDITIONER PIPING section for the installation of hose and pipe.

◆Installation procedure◆

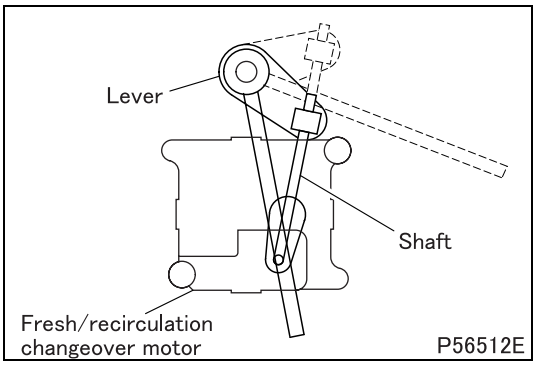

■ Installation: Fresh/recirculation changeover motor

- With the lever set to the “Ventilation” position, install the motor shaft through the lever.

HEATER AND COOLING UNIT, BLOWER

Heater Unit or Heater and Cooling Unit

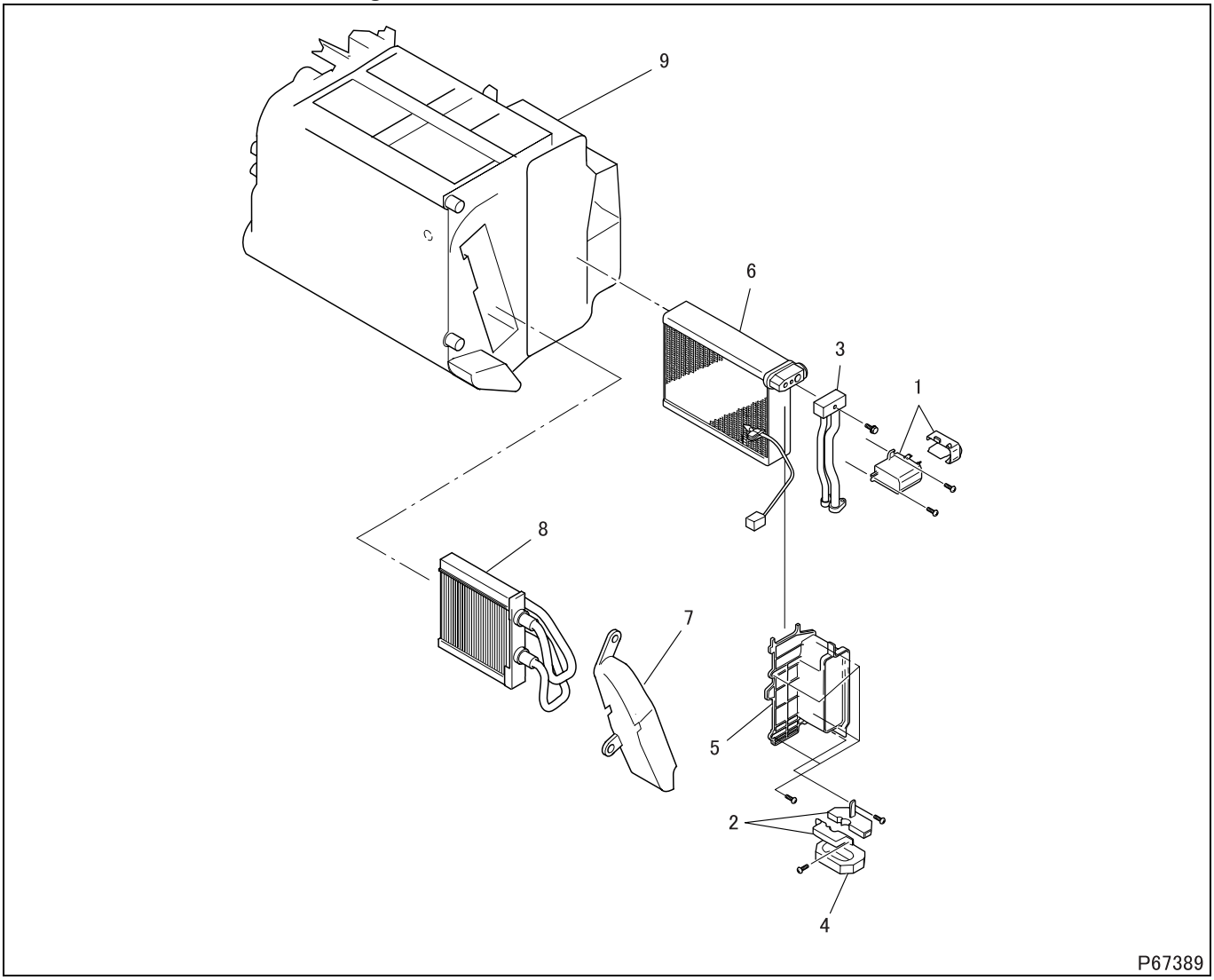

● Disassembly sequence

1 Cover <A/C>
2 Baffle cover <A/C>
3 Pipe assembly <A/C>
4 Rubber insulation <A/C>
5 Case cover
6 Evaporator assembly <A/C>
7 Cover
8 Heater core
9 Heater and cooling unit case

<A/C>: With air conditioner

● Assembly sequence

Follow the disassembly sequence in reverse.

FK.FM

SERVICE MANUAL
2008 Model
FOREWORD

This Service Manual contains maintenance and repair methods for the Mitsubishi Fuso Truck FK. FM Series. Read this manual carefully as an aid in providing correct, efficient maintenance. Please note that the information and specifications contained within this manual may change without notice. This is due to product modifications and continued vehicle improvements that are made throughout the model years. Should you encounter any discrepancy in the information provided, please do not hesitate to contact your nearest Mitsubishi Fuso Dealer or Mitsubishi Fuso Truck of America, Inc.

JULY 2007

HOME

GROUP INDEX

GENERAL 00
MAINTENANCE SCHEDULE 01
ENGINE 11
LUBRICATION 12
FUEL AND ENGINE CONTROL 13A
COMMON RAIL SYSTEM 13EA
AUTO CRUISE AND VEHICLE SPEED LIMITATION SYSTEM 13EB
COOLING 14
INTAKE AND EXHAUST 15
EMISSION CONTROL 17
CLUTCH 21
MANUAL TRANSMISSION
<M060S6, M070S6> 22A
AUTOMATIC TRANSMISSION
<M065A5 (Allison 1000RDS, 2200RDS)> .. 23A
<M100A6 (Allison 3000RDS)> 23B
PROPELLER SHAFT 25
FRONT AXLE
<FK61> 26A
<FK62, FK65, FM> 26B
REAR AXLE 27
WHEEL AND TIRE 31
FRONT SUSPENSION 33
REAR SUSPENSION
<LEAF> 34A
<AIR> 34B
BRAKE
<AIR-OVER HYDRAULIC BRAKE> 35A
<FULL AIR BRAKE> 35B
ANTI-LOCK BRAKE SYSTEM (ABS) 35E
PARKING BRAKE
<CENTER PARKING BRAKE> 36A
<WHEEL PARKING BRAKE> 36B
STEERING 37
BUMPER AND FRAME 41
CAB 42
DOOR 43
EXTERIOR 51
INTERIOR 52
ELECTRICAL 54
HEATER, AIR-CONDITIONER AND VENTILATION 55

Group 00

General

Table of Contents

Back

Home

MITSUBISHI FUSO TRUCK OF AMERICA, Inc.

Pub.No.PWME0806-00

INDEX

EQUIPMENT TYPE CODES LIST 00-2

POWER TRAINS TABLE 00-4

HOW TO READ THIS MANUAL 00-6

CHASSIS NUMBER, ENGINE NUMBER,
POWER TRAIN LABEL 00-10

VEHICLE IDENTIFICATION NUMBER 00-11

PRECAUTIONS FOR MAINTENANCE OPERATION 00-12

JACKING UP THE VEHICLE 00-24

DIAGNOSIS CODES
1. Diagnosis Codes 00-26
2. Reading and Erasing the Diagnosis Code 00-27

TABLE OF STANDARD TIGHTENING TORQUES 00-34

EQUIPMENT TYPE CODES LIST

Component	Name plate marking	Code description
Engine		
6M60T1	6 M 6 0 T 1	Classification of turbocharger With turbocharger Order of development within same series Order of development among different series Diesel engine No. of cylinders (6: six cylinders)
Clutch		
C7M38	C 7 M 38	Disc OD Facing material (M: Cera-metallic) Load carrying capacity of truck class (tonnage) on which the clutch is primarily used Initial letter of the clutch
Transmission		
M060S6	M 060 S 6	Forward speeds Type of mesh (S: Synchromesh, A: Automatic) Load carrying capacity of truck class (tonnage) on which the clutch is primarily used Initial letter of the transmission
Propeller shaft		
P8	P 8	Load carrying capacity of truck class (tonnage) on which the clutch is primarily used Initial letter of the propeller shaft
Front axle		
F060T	F 06 0 T	Vehicle type (T: Truck) Order of development within same series Load carrying capacity of truck class (tonnage) on which the clutch is primarily used Initial letter of the front axle
Rear axle		
R060T	R 06 0 T	Vehicle type (T: Truck) Order of development within same series Load carrying capacity of truck class (tonnage) on which the clutch is primarily used Initial letter of the rear axle
Reduction and differential		
D050H	D 05 0 H	Tooth profile (H: Hypoid gear) Order of development within same series Load carrying capacity of truck class (tonnage) on which the clutch is primarily used Initial letter of the reduction & differential

M E M O

POWER TRAINS TABLE

Vehicle model	Engine	Clutch	Transmission	Propeller shaft	Rear axle	Reduction & differential
FK61FJ1LSUH	6M60T1	Torque converter	M065A5 [1000RDS]	P8	R050T	D050H
FK61FK1LSUH	6M60T1	Torque converter	M065A5 [1000RDS]	P8	R050T	D050H
FK61FM1LSUH	6M60T1	Torque converter	M065A5 [1000RDS]	P8	R050T	D050H
FK62FFZ1LSUG	6M60T1	C7M38	M060S6	P8	R052T	D052H
FK62FJZ1LSUG	6M60T1	C7M38	M060S6	P8	R052T	D052H
FK62FLZ1LSUG	6M60T1	C7M38	M060S6	P8	R052T	D052H
FK62FMZ1LSUG	6M60T1	C7M38	M060S6	P8	R052T	D052H
FK62FSZ1LSUG	6M60T1	C7M38	M060S6	P8	R052T	D052H
FK65FMZ1LSUG	6M60T1	C7M38	M060S6	P8	R052T	D052H
FK65FSZ1LSUG	6M60T1	C7M38	M060S6	P8	R052T	D052H
FK62FJZ1LSUH	6M60T1	Torque converter	M065A5 [2200RDS]	P8	R052T	D052H
FK62FLZ1LSUH	6M60T1	Torque converter	M065A5 [2200RDS]	P8	R052T	D052H
FK62FMZ1LSUH	6M60T1	Torque converter	M065A5 [2200RDS]	P8	R052T	D052H
FK62FSZ1LSUH	6M60T1	Torque converter	M065A5 [2200RDS]	P8	R052T	D052H
FK65FMZ1LSUH	6M60T1	Torque converter	M065A5 [2200RDS]	P8	R052T	D052H
FK65FSZ1LSUH	6M60T1	Torque converter	M065A5 [2200RDS]	P8	R052T	D052H
FM65FJ1LSUG	6M60T1	C7M38	M070S6D	P10	R060T	D8H
FM65FL1LSUG	6M60T1	C7M38	M070S6D	P10	R060T	D8H
FM65FM1LSUG	6M60T1	C7M38	M070S6D	P10	R060T	D8H
FM65FP1LSUG	6M60T1	C7M38	M070S6D	P10	R060T	D8H
FM65FJ1LSUH	6M60T1	Torque converter	M100A6 [3000RDS]	P10	R060T	D8H
FM65FL1LSUH	6M60T1	Torque converter	M100A6 [3000RDS]	P10	R060T	D8H
FM65FM1LSUH	6M60T1	Torque converter	M100A6 [3000RDS]	P10	R060T	D8H
FM65FP1LSUH	6M60T1	Torque converter	M100A6 [3000RDS]	P10	R060T	D8H

M E M O

HOW TO READ THIS MANUAL

This manual consists of the following parts:
- Specifications
- Structure and Operation
- Troubleshooting
- On-vehicle Inspection and Adjustment
- Service procedures

On-vehicle Inspection and Adjustment

- Procedures for inspection and adjustment of individual parts and assemblies as mounted on the vehicle are described including specific items to check and adjust. Specified or otherwise, inspection should be performed for looseness, play, backlash, crack, damage, etc.

Service procedure

- Procedures for servicing components and parts off the vehicle are described centering on key points in their removal, installation, disassembly, reassembly, inspection, etc.

Inspection

- Check items subject to acceptance or otherwise on the basis of service standards are all given.
- Some routine visual checks and cleaning of some reused parts are not described but must be always included in actual service work.

Caution

- This service manual contains important cautionary instructions and supplementary information under the following four headings which identify the nature of the instructions and information:

DANGER ⚠	Precautions that should be taken in handing potentially dangerous substances such as battery fluid and coolant additives.
WARNING ⚠	Precautionary instructions, which, if not observed, could result in serious injury or death.
CAUTION ⚠	Precautionary instructions, which, if not observed, could result in damage to or destruction of equipment or parts.
NOTE	Suggestions or supplementary information for more efficient use of equipment or a better understandings.

Terms and Units

● Front and rear

The forward running direction of the vehicle is the front and the reversing direction is the rear.

● Left and right

Left hand side and right hand side, when facing the forward running direction of the vehicle, are respectively left and right.

● Standard value

Standard value dimensions in designs indicating: the design dimensions of individual parts, the standard clearance between two parts when assembled, and the standard value for an assembly part, as the case may be.

● Limit

When the value of a part exceeds this, it is no longer serviceable in respect of performance and strength and must be replaced or repaired.

● Tightening torque

- Values are directly specified for out-of-standard tightening torques for bolts and nuts.
- Where there is no specified figure for tightening torque, follow the table covering standard tightening torques. (Values for standard tightening torques are based on thread size and material.)
- When the item is to be tightened in a wet state, “wet” is indicated. Where there is no indication, read it as dry.

● Units

Tightening torques and other parameters are given in SI* units with imperial unit and metric units added in brackets { }.
*SI: Le Système International d’Unités

Example: 390 N·m {290 ft.lbs, 40 kgf·m}

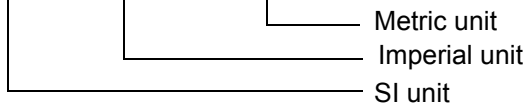

Unit		SI unit {imperial unit, metric unit}	Conversion factor
Force		N {lbs, kgf}	9.80665 N {2.2046 lbs, 1 kgf}
Moment of force		N·m {ft.lbs, kgf·m}	9.80665 N·m {7.2329 ft.lbs, 1 kgf·m}
Pressure	Positive pressure	kPa {psi, kgf/cm^2}	98.0665 kPa {14.22 psi, 1 kgf/cm^2}
	Vacuum pressure	kPa {in.Hg, mmHg}	0.133322 kPa {0.03937 in.Hg, 1 mmHg}
Volume		J {BTU, kcal}	4186.05 J {3.96825BTU, 1 kcal}
Heat quantity		W {BTU/h, kcal/h}	1.16279W {3.96825BTU/h, 1 kcal/h}

Example: 30 mm {1.18 in.}

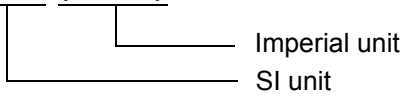

Unit	SI unit {imperial unit}	Conversion factor
Length	mm {in.}	1 mm {0.03937 in.}
	m {ft.}	1 m {3.2808 ft.}
	km {mile}	1 km {0.6214 mile}
Mass	kg {lb}	1 kg {2.2046 lb}
	g {oz}	1 g {0.035274 oz}
Temperature (in degree Celsius)	°C {°F}	1°C {(1°C × 1.8 + 32) °F}
Velocity	km/h {mph}	1 km/h {0.6214 mph}
	m/s {ft/s}	1 m/s {3.281 ft/s}
Volume	L {qts}, L {gal}	1 L {1.05336 qts}, 1 L {0.2642 gal}
	cm^3 {cu.in.}	1 cm^3 {0.061023 cu.in.}
Area	m^2 {in^2}, m^2 {ft^2}	1 m^2 {1.550 × 10^3 in^2}, 1 m^2 {1.076 × 10 ft^2}

Symbol	Denotation	Application	Remarks
Ta	Tightening torque	Parts not tightened to standard torques (standard torques specified where necessary for servicing)	Specified values shown in table See Table of Standard Tightening Torques for parts for which no tightening torques are specified.
P	Locating pin	Parts to be positioned for installation	
⊗	Non-reusable parts	Parts not to be reused	
a	Lubricant and/or sealant	Parts to be coated with lubricant or sealant for assembly or installation	Necessary lubricant and/or sealant, quantity required, etc. are specified in table.
a	Special tool	Parts for which special tools are required for service operation	Tool name/shape and part number are shown in table.
*a	Associated part	Parts associated with those removed/disassembled for servicing	

Denotes that tightening torque is specified.

WHEEL HUB AND BRAKE DRUM

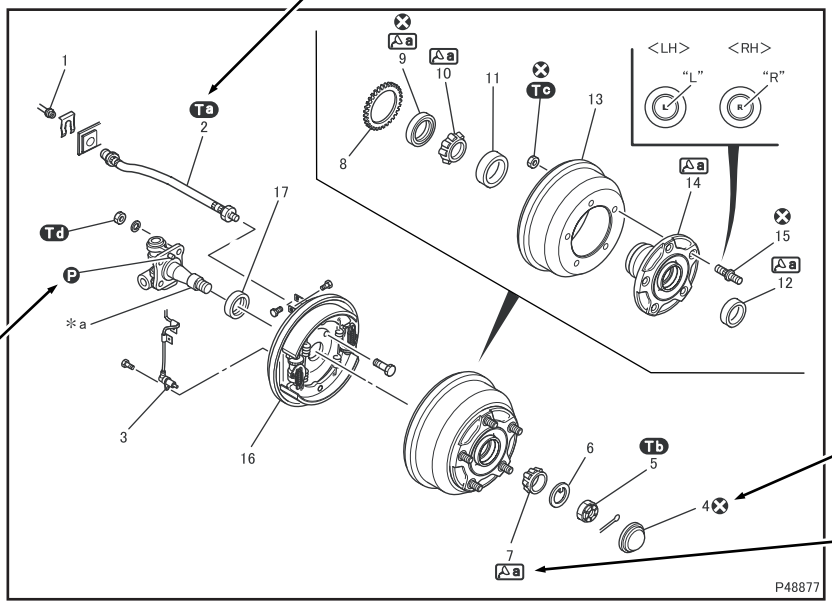

Indicates position of locating pin.

Identifies non-reusable parts.

Denotes that coating with lubricant or sealant is required.

● Disassembly sequence

1 Brake pipe
2 Brake hose
3 Wheel speed sensor
4 Hub cap
5 Lock nut
6 Lock washer
7 Outer bearing inner race
8 Anti-lock brake system rotor
9 Oil seal
10 Inner bearing inner race
11 Inner bearing outer race
12 Outer bearing outer race
13 Brake drum
14 Wheel hub
15 Hub bolt
16 Front drum brake (See Gr.35A)
17 Spacer

*a: Knuckle
P: Locating pin
⊗: Non-reusable parts

● Assembly sequence

Follow the disassembly sequence in reverse.

Service standards (unit: mm {in.})

Location	Maintenance item		Standard value	Limit	Remedy
7, 10, 11, 12	Starting torque of wheel hub bearing (Tangential force at hub bolt position with oil seal fitted in)		1 to 3.5 N·m {0.7 to 2.6 ft.lbs, 0.10 to 0.35 kgf·m} (Tangential force:8.8 to 28.4 N {2.0 to 6.4 lbs, 0.9 to 2.9 kgf})	–	Adjust or replace
14	Brake drum	Inside diameter	320 {12.6}	322 {12.7}	Repair or replace
		Cylindricality	0.05 {0.0020}	0.05 {0.0079}	

These location numbers correspond with disassembly sequence numbers.

P58289N

"Wet" is indicated when part is to be tightened with oil or grease applied to its threaded part.

Tightening torque (unit: N·m {ft.lbs, kgf·m})

Mark	Part to be tightened	Tightening torque	Remarks
Ta	Brake force tightening	13 to 17 {9.6 to 13, 1.3 to 1.7}	–
Tb	Lock nut	113 ± 15 {83 ± 11, 11.5 ± 1.5}	Wet
Tc	Nut (brake drum and wheel hub mounting)	343 ± 39 {250 ± 29, 35 ± 4}	–
Td	Nut (front drum brake mounting)	118 ± 20 {87 ± 15, 12 ± 2}	–

Lubricant and/or sealant

Mark	Point of application	Specified lubricant and/or sealant	Quantity
Sa	Between rolls of outer bearing inner race and inner bearing inner race	Mitsubishi wheel bearing grease	As required
	Inside wheel hub		395 ± 40 g {13.9 ± 1.41 oz}

Special tools (unit: mm {in.})

Mark	Tool name and shape	Part No.	Application
Ca	Hub Cap Wrench A: 0.5°, B: 78° 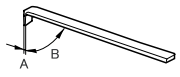 P49261	MB999108	Removal of hub cap
Cb	Oil Seal Installer A: ϕ84 {3.31}, B: ϕ70 {2.76} 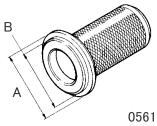 05619	MB999097	Installation of oil seal

Identification marks for special tools are the same as used in the text.

◆ Removal procedure

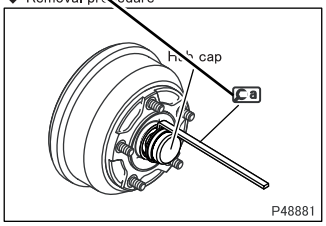

P48881

■Removal: Hub cap

◆Installation procedure◆

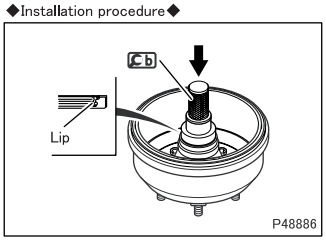

P48886

■Installation: Oil seal

Apply grease to the lip of the oil seal, then fit the oil seal onto the wheel huh in the illustrated direction.

P58290N

CHASSIS NUMBER, ENGINE NUMBER, POWER TRAIN LABEL

- Chassis and engine numbers are allocated to each vehicle and engine respectively in the order of production. These numbers are required at vehicle inspection for registration.

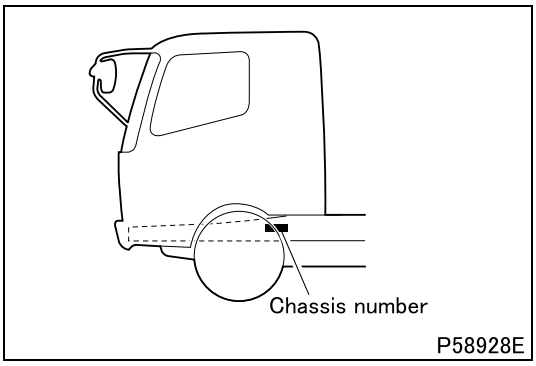

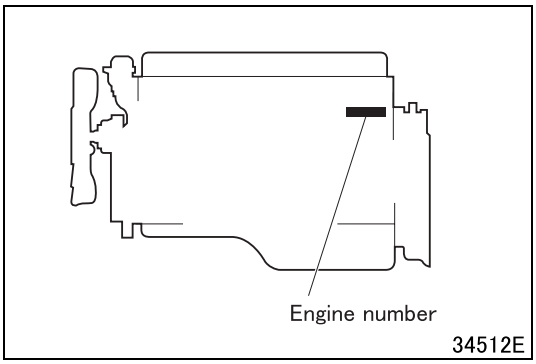

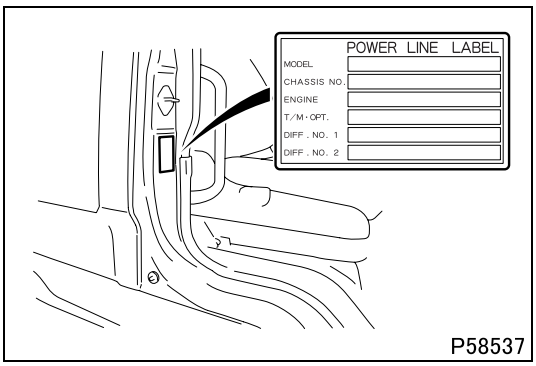

- Power train label located in the position illustrated indicates the vehicle model, chassis number and information relevant to the vehicle's power train components.

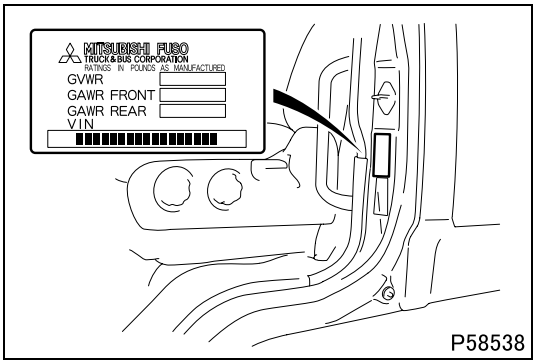

- The vehicle identification number is punch-marked on the plate, which is attached in the position as illustrated.
  The vehicle identification number consists of a 17-digit set of alphanumeric characters. Each digit represents the following specifications.

J L 6 D F F 1 E ■ 9 K ■■■■■■

(1) (2) (3) (4) (5) (6) (7) (8) (9) (10) (11) (12)

(1)	Country	J: Japan
(2)	Make	L: Mitsubishi Fuso
(3)	Type	6: Incomplete vehicle
(4)	Gross vehicle weight / Brake system	
		D: 19,501 to 26,000 lbs. / Air over hydraulic
		F: 26,001 to 33,000 lbs. / Full air
		H: 19,501 to 26,000 lbs. / Full air
(5)	Line	F: FK61F
		J: FM65F
		K: FK62F
		L: FK65F
(6)	Series (Wheel base)	F: 3.5 to 3.79 m (11.48 to 12.43 ft.)
		J: 4.4 to 4.69 m (14.43 to 15.38 ft.)
		K: 4.7 to 4.99 m (15.41 to 16.37 ft.)
		L: 5.0 to 5.29 m (16.40 to 17.35 ft.)
		M: 5.3 to 5.59 m (17.38 to 18.33 ft.)
		P: 5.9 to 6.19 m (19.35 to 20.30 ft.)
		S: 6.2 to 6.59 m (20.34 to 21.62 ft.)
(7)	Cab chassis type	1: Chassis cab
(8)	Engine	E: 7.545 L Diesel turbo charged and charge air cooled
(9)	Check digit	
(10)	Model year	9: 2009
(11)	Plant	K: Kawasaki
(12)	Plant sequential No.	

PRECAUTIONS FOR MAINTENANCE OPERATION

DANGER ⚠

- **This product contains or emits chemicals known to the State of California to cause cancer and birth defects or other reproductive harm.**

- Before performing service operations, inquire into the customer's complaints and ascertain the condition by checking the total distance traveled, the conditions under which the vehicle is operated, and other relevant factors on the vehicle. And note the necessary information. This information will help you to service the vehicle efficiently.
- Check the location of the fault, and identify its cause. Based on your findings, determine whether parts must be removed or disassembled. Then, follow the service procedure given in this manual.

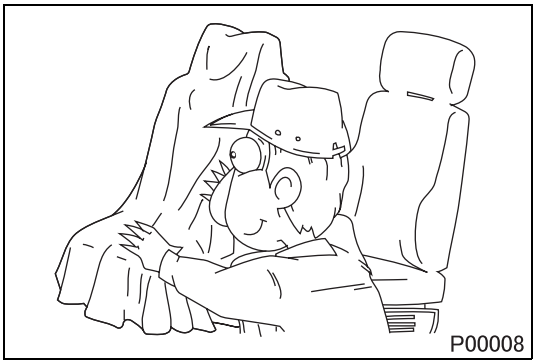
P00008

- Perform service operations on a level surface. Before starting, take the following preparatory steps:
  - To prevent soiling and damage, place covers over the seats, trim and floor in the cab and over the paintwork of the body.

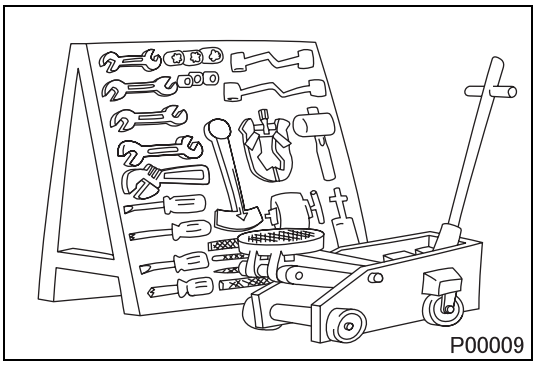
P00009

- Prepare all the general and special tools necessary for the job.

WARNING ⚠

- **Special tools must be used wherever specified in this manual. Do not attempt to use other tools since they could cause injuries and/or vehicle damage.**

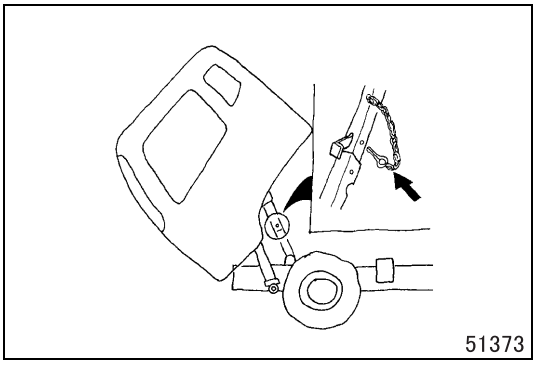
51373

- After manually tilting the cab, be sure to fit the safety pin into the hole to secure the cab stay in a rigid state.

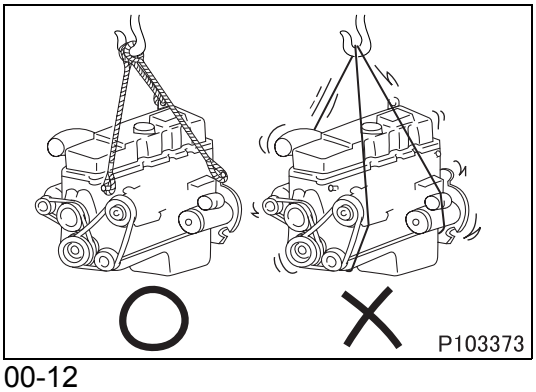
P103373

- Take extreme care when removing/installing heavy items such as engine, transmission and axle. When lifting heavy items using a cable etc., observe the following precautions.
  - Identify the mass of the item being lifted. Use the cable that is strong enough to support the mass.

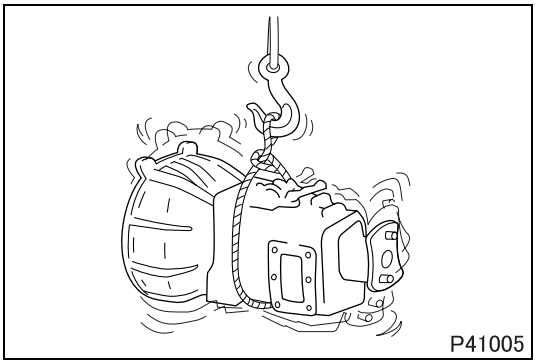

- If lifting eyes are not provided on the item being lifted, tie a cable around the item taking into account the item's center of gravity.

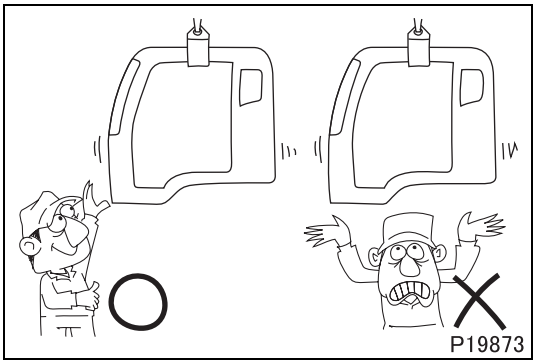

- Do not allow anyone to pass or stay under a lifted item which may possibly fall.

- Never work in shoes that have oily soles.
  When working with a partner or in a group, use pre-arranged signals and pay constant attention to safety. Be careful not to touch switches and levers unintentionally.

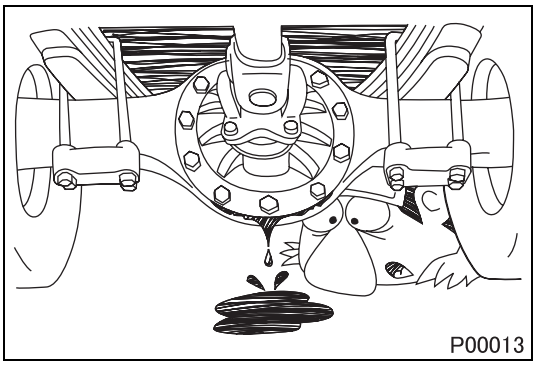

- Inspect for oil leakage etc. before washing the vehicle. If the order is reversed, any oil leakage or fault that may exist could go unnoticed during inspection.

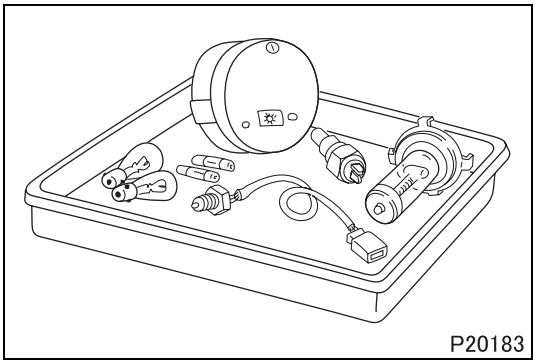
P20183

- Prepare replacement parts ready for installation.

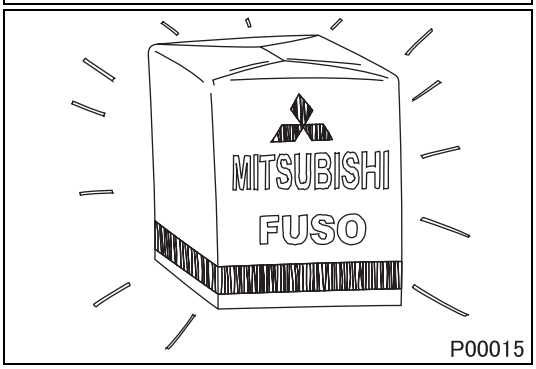

P00015

- Oil seals, packings, O-rings and other rubber parts, gaskets, and split pins must be replaced with new ones after removal. Use only genuine MITSUBISHI replacement parts.

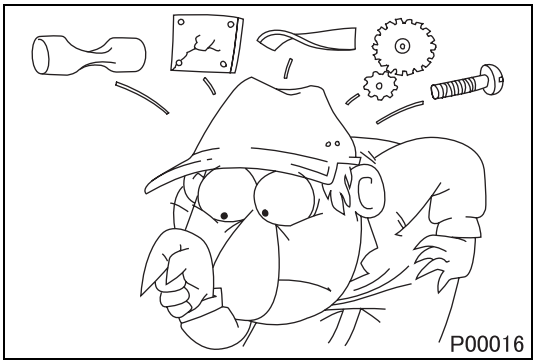
P00016

- When disassembling parts, visually check them for wear, cracks, damage, deformation, deterioration, rust, corrosion, defective rotation, fatigue, clogging and any other possible defect.

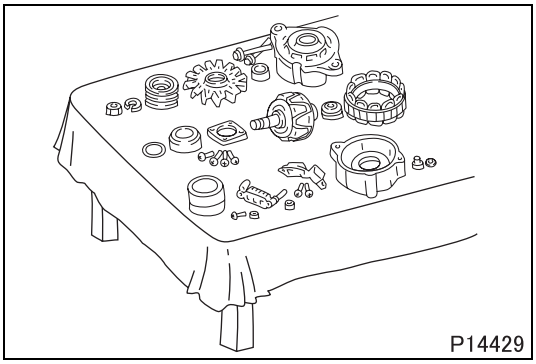
P14429

- To facilitate correct reassembly of parts, make alignment marks on them before disassembly and arrange disassembled parts neatly. Make punch marks and other alignment marks where they will not detract from parts' functionality and appearance.
- After removing parts from the vehicle, cover the area to keep it free of dust.

CAUTION ⚠

- **Be careful not to mix up identical parts, similar parts and parts that have left/right alignments.**
- **Keep new replacement parts and original (removed) parts separately.**

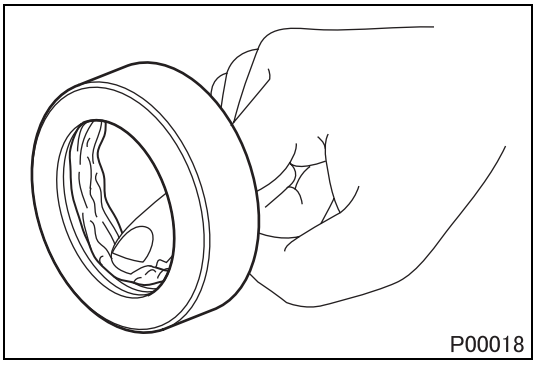
P00018

- Apply the specified oil or grease to U-seals, oil seals, dust seals and bearings before reassembly.
- Always use the specified oils and greases when performing inspection or replacement. Immediately wipe away any excess oil or grease with a rag.

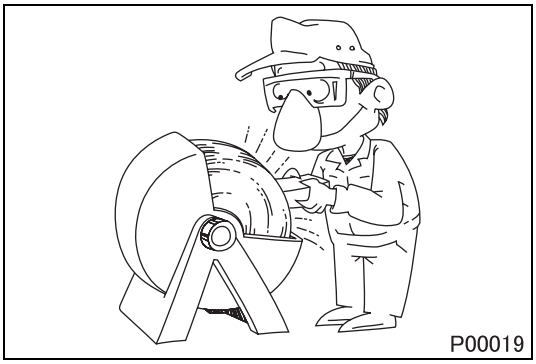
P00019

- Wear safety goggles when using a grinder or welder. Wear gloves when necessary, and watch out for sharp edges and other items that might wound your hands.

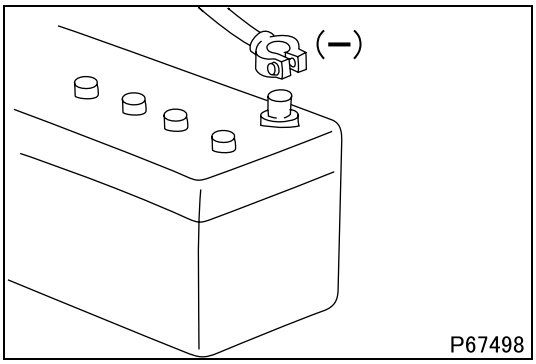

P67498

- Before working on the electrical system, disconnect the battery (–) terminal to prevent short circuits.

CAUTION ⚠

- **Make sure the starter switch and lighting switches are OFF before disconnecting or connecting battery cable. Semiconductor components may otherwise be damaged.**

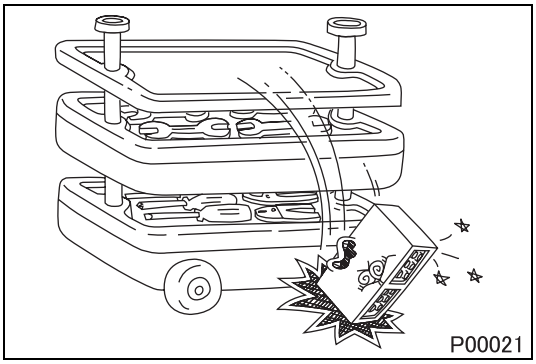
P00021

- Carefully handle sensors relays, and other items that are sensitive to shock and heat. Do not remove or paint the cover of any control unit.

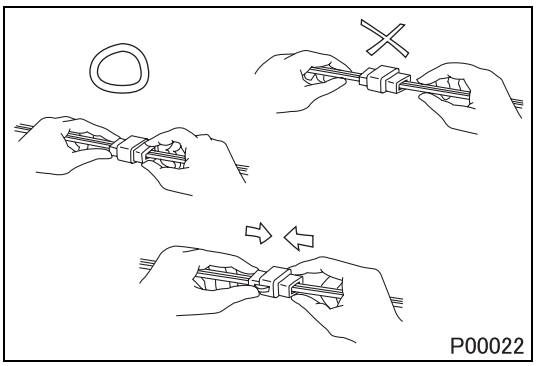
P00022

- When separating connectors, grasp the connectors themselves rather than the harnesses.
- To separate locking connectors, first push them in the direction of the arrows. To reconnect locking connectors, push them together until they click.

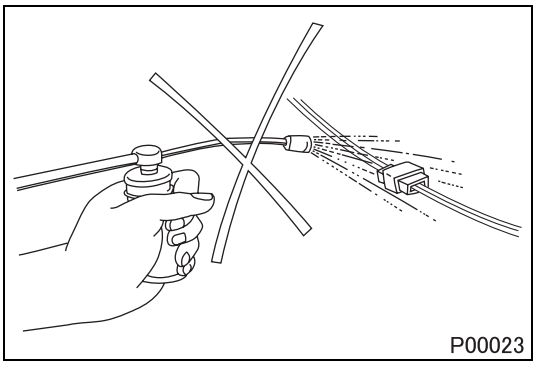
P00023

- Before washing the vehicle, cover electrical parts to keep them dry. (Use plastic sheets or the like.) Keep water away from harness connectors and sensors and immediately wipe off any water that gets on them.

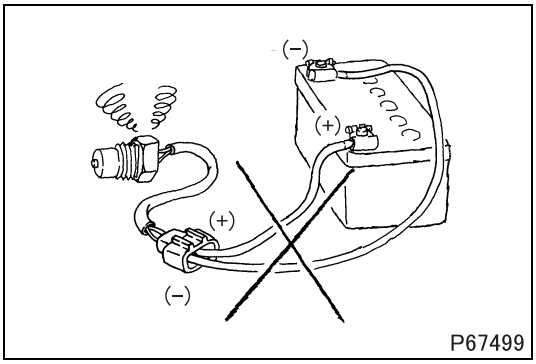

- When applying a voltage to a part for inspection purposes, check that the (+) and (–) cables are connected properly then gradually increase the voltage from zero. Do not exceed the specified voltage.
  Remember that control units and sensors do not necessarily operate on the battery voltage.

1. Handling Precautions for Electric Circuits

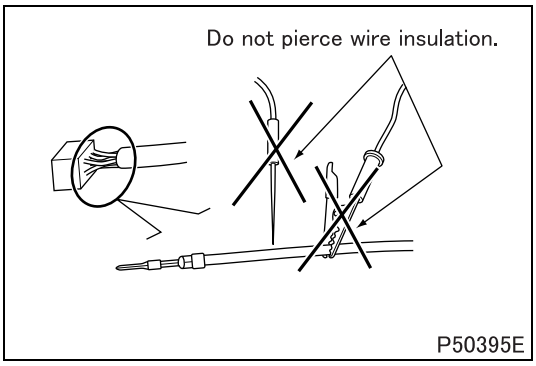

CAUTION ⚠

- **Do not pierce wire insulation with test probes or alligator clips when performing electrical inspections. Doing so can, particularly with the chassis harness, hasten corrosion.**

1.1 Inspection of harnesses

(1) Inspections with connectors fitted together

(1.1) Waterproof connectors

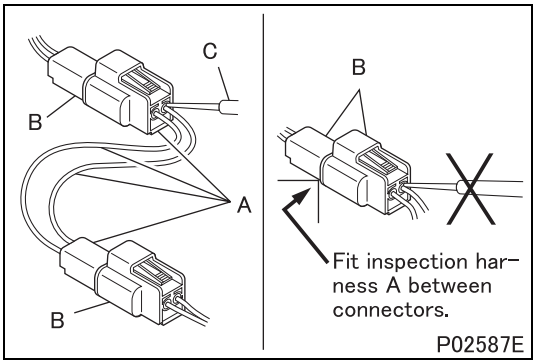

- Connect an inspection harness and connector A between the connectors B of the circuit to be inspected. Perform the inspection by applying a test probe C to the connectors of the inspection harness. Do not insert the test probe C into the wire-entry sides of the waterproof connectors since this would damage their waterproof seals and lead to rust.

(1.2) Non-waterproof connectors

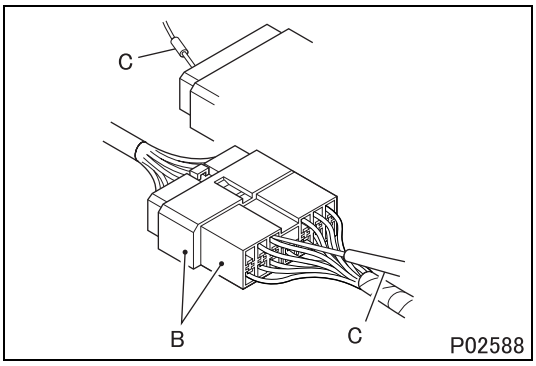

- Perform the inspection by inserting a test probe C into the wire-entry sides of the connectors. An extra-narrow probe is required for control unit connectors, which are smaller than other types of connector. Do not force a regular-size probe into control unit connectors since this would cause damage.

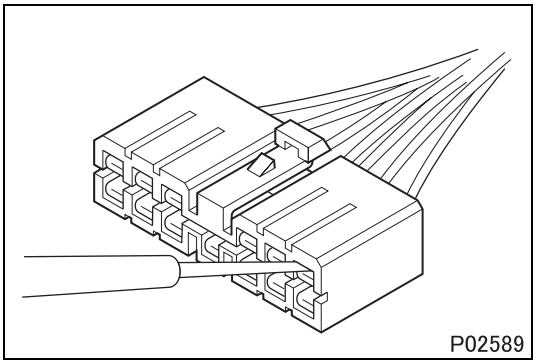
P02589

(2) Inspections with connectors separated

(2.1) Inspections on female terminals

- Perform the inspection by carefully inserting a test probe into the terminals. Do not force the test probe into the terminals since this could deform them and cause poor connections.

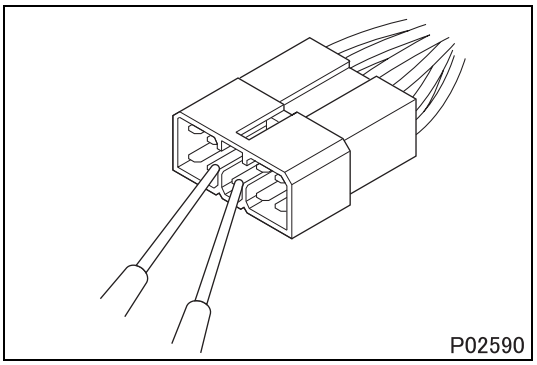
P02590

(2.2) Inspections on male terminals

- Perform the inspection by applying test probes directly to the pins.

CAUTION ⚠

- **Be careful not to short-circuit pins together with the test probes. With control unit connectors, short-circuiting of pins can cause damage to the control unit's internal circuitry.**

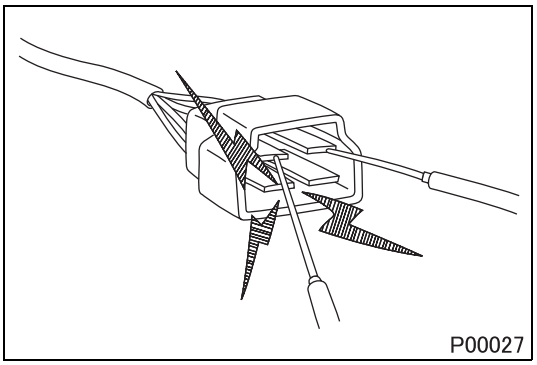
P00027

- When using a multimeter to check continuity, do not allow the test probes to touch the wrong terminals.

1.2 Inspection of connectors

(1) Visual inspection

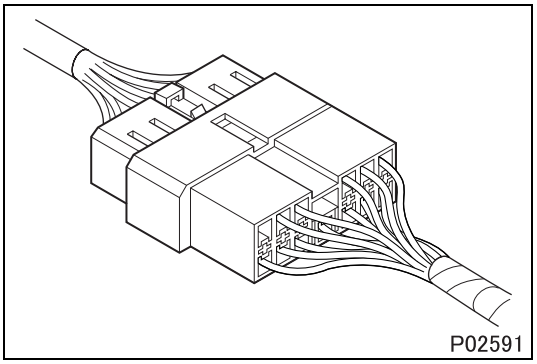
P02591

- Check that the connectors are fitted together securely.

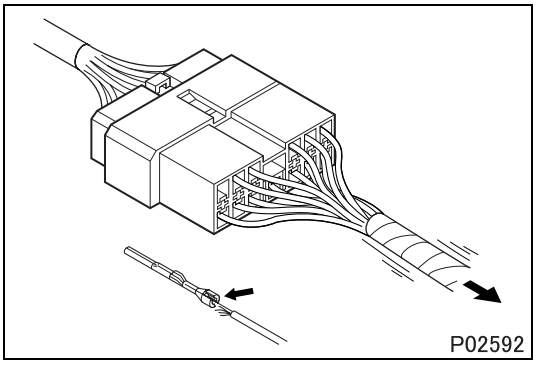
P02592

- Check whether wires have been separated from their terminals due to pulling of the harness.

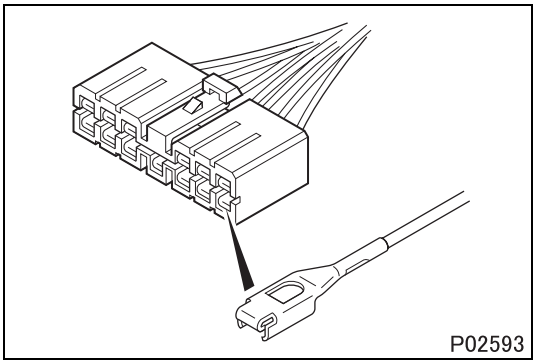
P02593

- Check that male and female terminals fit together tightly.

- Check for defective connections caused by loose terminals, by rust on terminals, or by contamination of terminals by foreign substances.

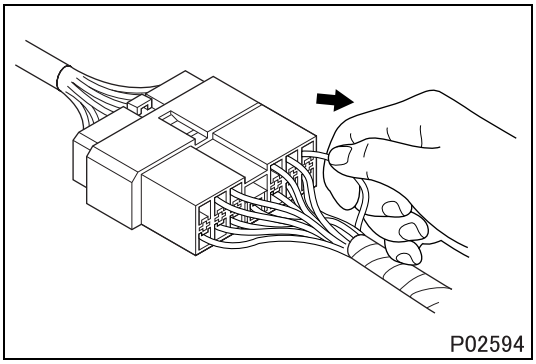
P02594

(2) Checking for loose terminals

- If connector terminal retainers become damaged, male and female terminals may not mate with each other when the connector bodies are fitted together. To check for such terminals, gently pull each wire and see whether any terminals slip out of their connector housings.

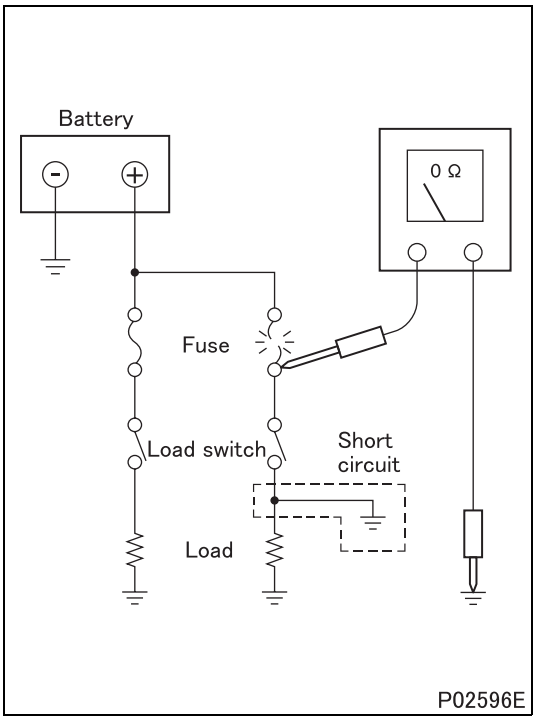

P02596E

1.3 Inspections when a fuse blows

- Remove the fuse, then measure the resistance between ground and the fuse's load side.
  Next, close the switch of each circuit connected to the fuse. If the resistance measurement between any switch and ground is zero, there is a short circuit between the switch and the load. If the resistance measurement is not zero, the circuit is not currently short-circuited; the fuse probably blew due to a momentary short circuit.

- The main causes of short circuits are as follows:
  - Harnesses trapped between chassis parts
  - Harness insulation damage due to friction or heat
  - Moisture in connectors or circuitry
  - Human error (accidental short-circuiting of components)

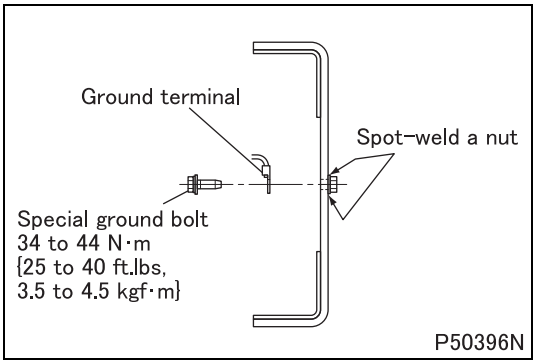

1.4 Inspection of chassis ground

- A special ground bolt is used to tighten a ground terminal. When servicing the ground point, be sure to follow the procedures described below:
  - When reinstalling the ground bolt
    Tighten the ground bolt to the specified torque.
  - When relocating the ground point
    A special ground bolt must be used. Spot-weld a nut to a frame and tighten the ground bolt to the specified torque. Be sure to apply touch-up paint to the welded point.

2. Service Precautions for Alternators

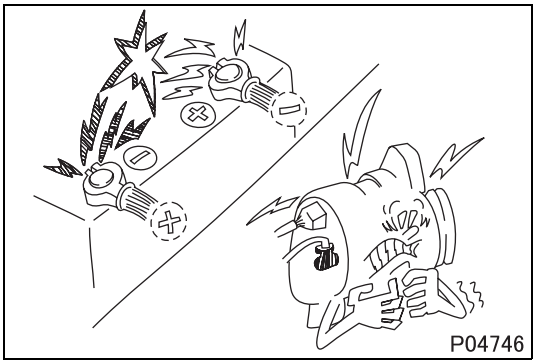

- When servicing alternators, observe the following precautions:
  - Never reverse the polarity of battery connections.
    If the polarity of the battery connections were to be reversed, a large current would flow from the battery to the alternator, damaging the diodes and regulator.

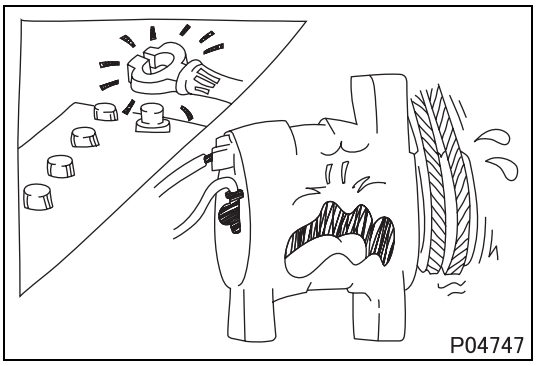

- Never disconnect the battery cables with the engine running.
  Disconnection of the battery cables during engine operation would cause a surge voltage, leading to deterioration of the diodes and regulator.

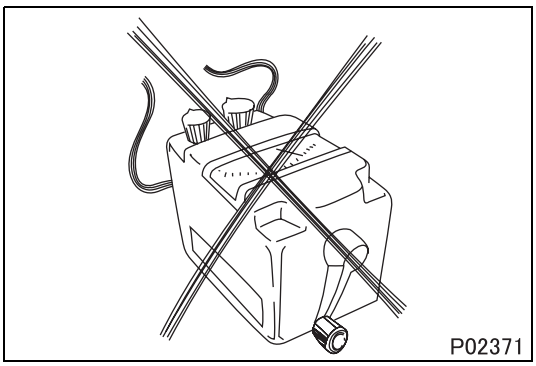

- Never perform inspections using a high-voltage multimeter.
  The use of a high-voltage multimeter could damage the diodes and regulator.

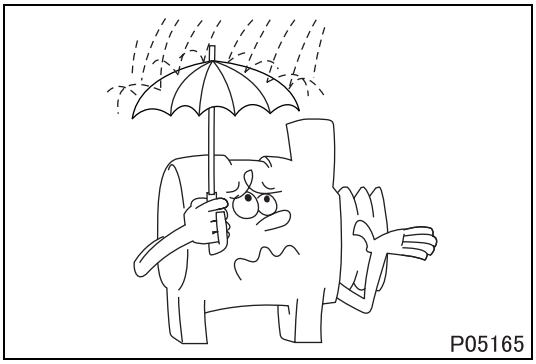

- Keep alternators dry.
  Water on alternators can cause internal short circuits and damage.

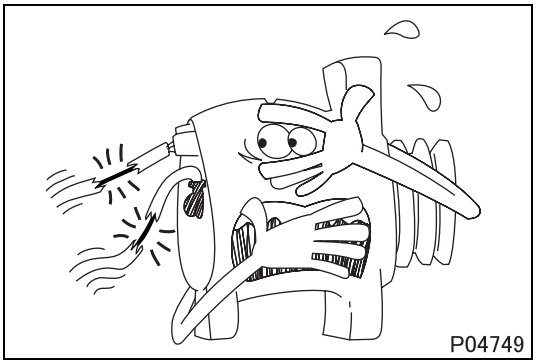

- Never operate an alternator with the B and L terminals short-circuited. Operation with the B and L terminals connected together would damage the diode trio.

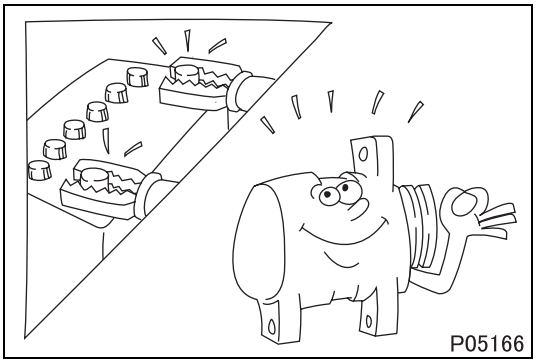

- Disconnect the battery cables before quick-charging the battery with a quick charger.
  Unless the battery cables are disconnected, quick-charging can damage the diodes and regulator.

3. Intermittent Faults

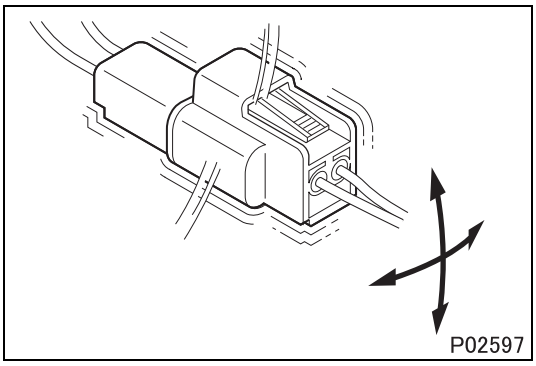

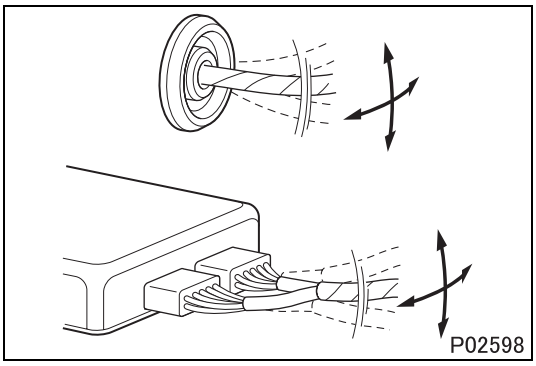

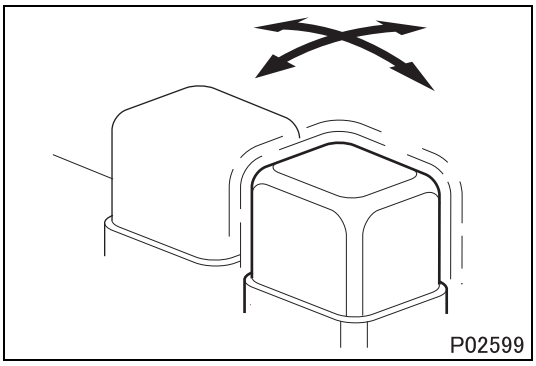

- An intermittent fault typically occurs only under certain operating conditions. Once these conditions have been identified, the cause of the intermittent fault can be ascertained easily. First, ask the customer about the vehicle operating conditions and weather conditions under which the fault occurs. Also ask about the frequency with which the fault occurs and about the fault symptoms. Then, reproduce the fault based on this information.
  In accordance with the conditions under which the fault occurs, determine whether the fault is caused by vibration, heat or other factors. if vibration is a possible factor, see if the fault can be reproduced by performing the following checks on individual connectors and other parts:
  - Gently move connectors up and down and to left and right.
  - Gently move wiring harnesses up and down and to left and right.
  - Gently wiggle sensors and other devices by hand.
  - Gently wiggle wiring harnesses on suspension systems and other moving parts.

- Connectors and other parts to be checked are those included or given as likely fault locations in inspection procedures corresponding to diagnosis codes and/or fault symptoms.

4. Precautions for Arc Welding

- When arc welding is performed, current from the welder flows to ground via the vehicle's metal parts. Unless appropriate steps are taken, this current can damage control units, other electrical devices and wiring harnesses. And any electrical device near the point on the vehicle to which the (–) cable of the welder is connected, might be largely damaged.

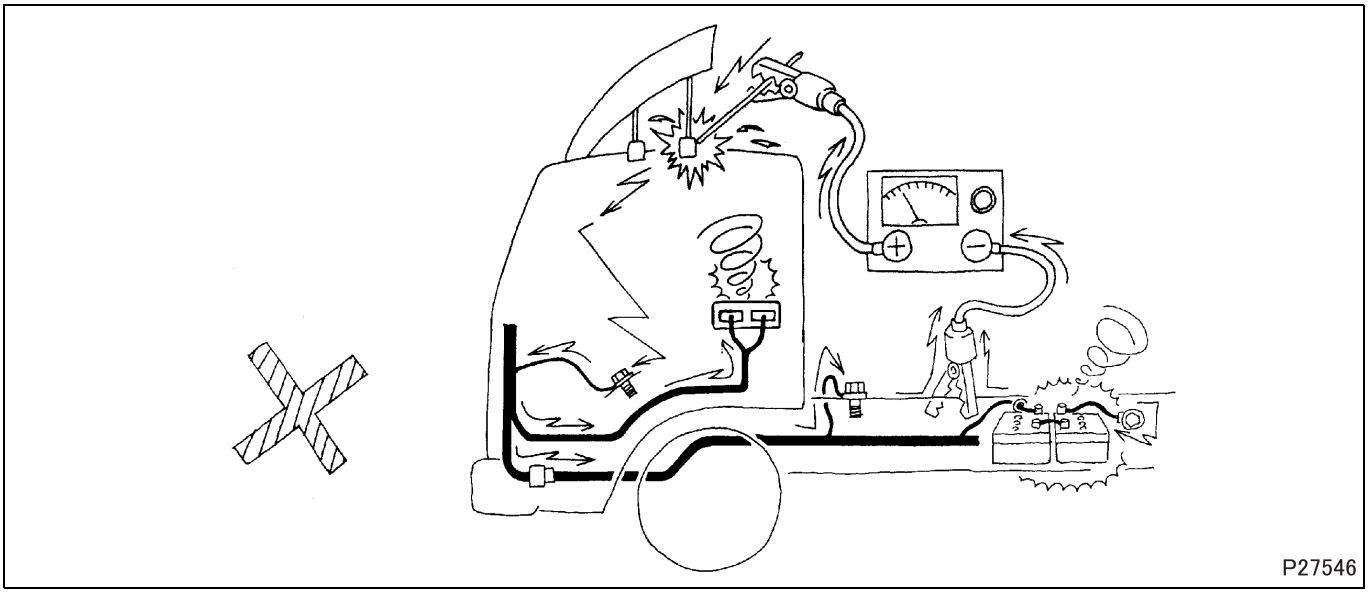

- Current flows backward as shown below.

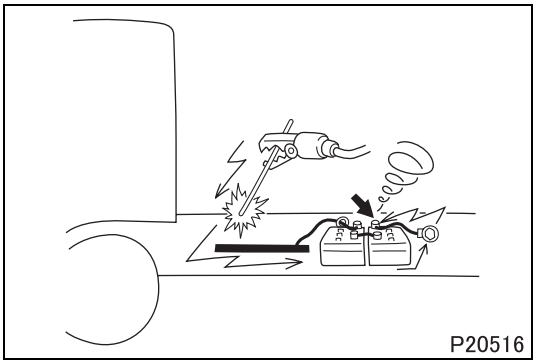

4.1 From battery (–) terminal

To prevent damage to the battery and to electrical devices that are connected directly to the battery, it is essential to disconnect the battery's (–) cable.

4.2 Procedure

- Turn the starter switch to the LOCK position.
- Disconnect the battery's (–) cable.
- Cover all parts of the vehicle that may be damaged by welding sparks.
- Connect the welder's (–) cable to the vehicle as close as possible to the area being welded. Do not connect the welder's (–) cable to the cab if the frame is being welded, and vice versa.
- Set the welding current in accordance with the part being welded.

M E M O

JACKING UP THE VEHICLE

<Front of vehicle>

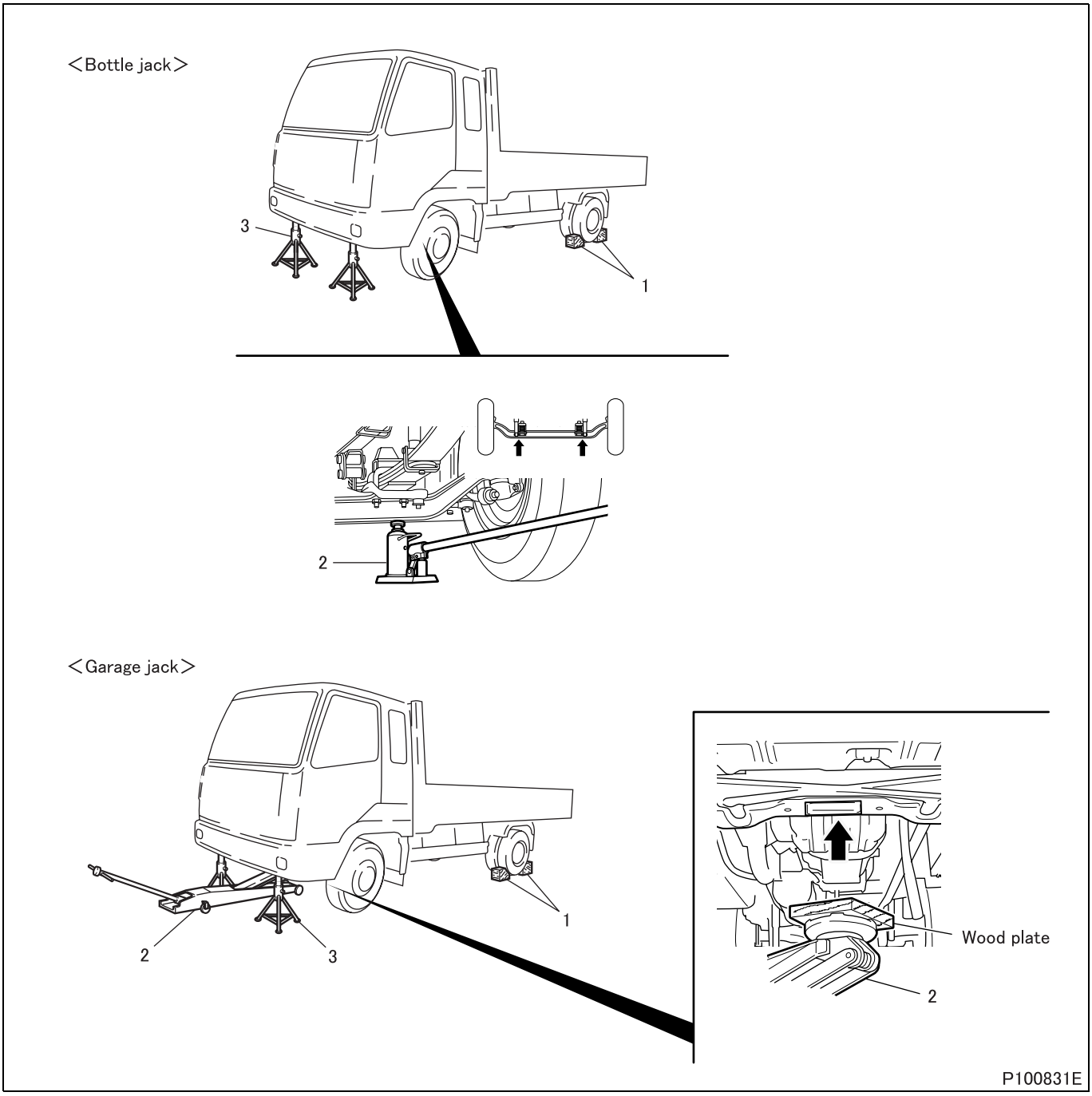

Jacking up procedure

1 Place chocks against the rear wheels.
2 Set a bottle jack or garage jack and jack up the front of the vehicle.
3 Support the front of the vehicle frame on jack stands.

WARNING ⚠

- **Chock the wheels firmly to prevent the vehicle from rolling away.**
- **Do not attempt to remove the chocks until the operation is completed.**
- **It is extremely dangerous to support the vehicle with only bottle jack or garage jack. Be sure to additionally support the front of the vehicle frame on rigid racks.**
- **Never attempt to remove any of the bottle jack, garage jack, or jack stands until the operation is completed.**

<Rear of Vehicle>

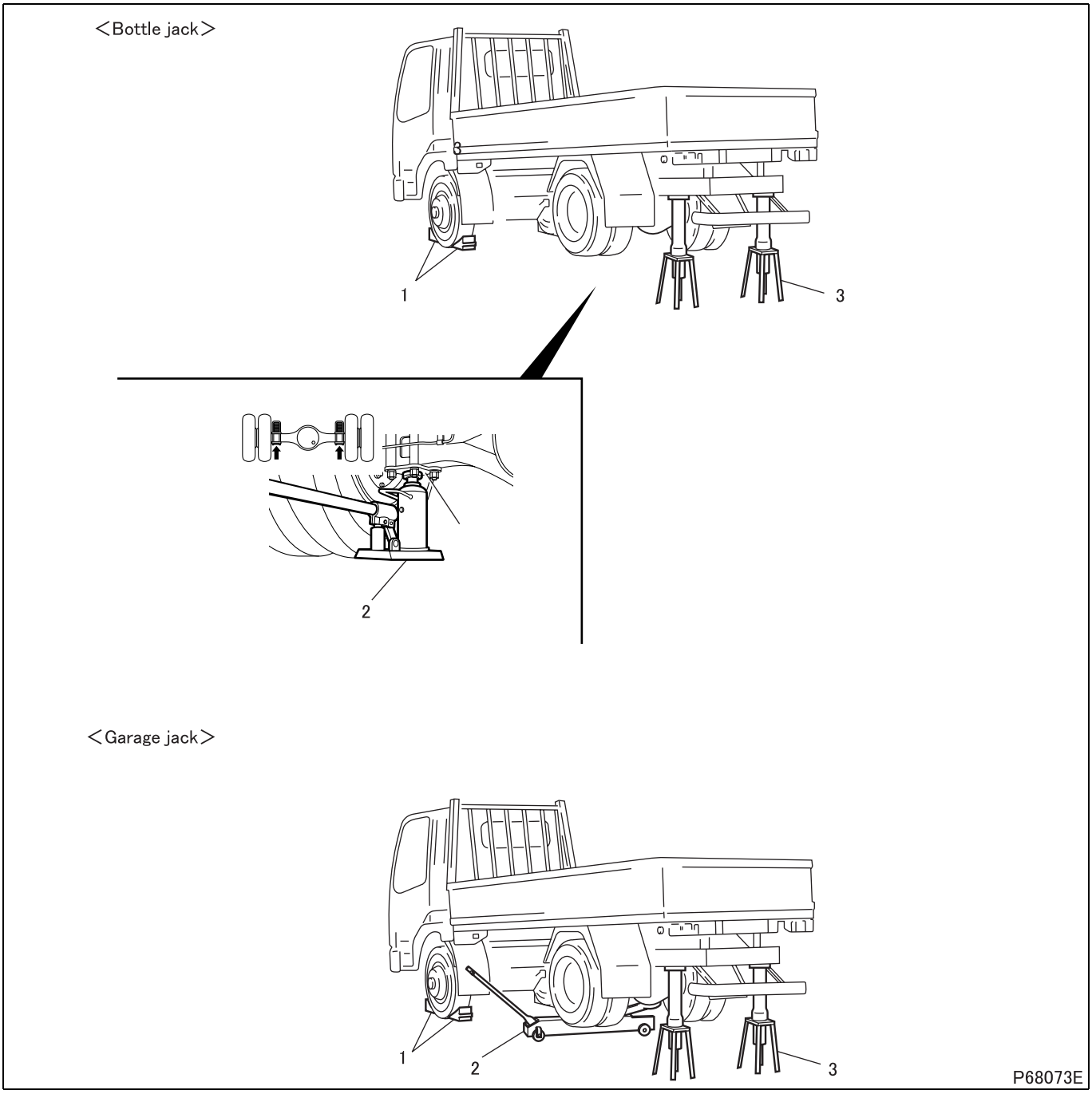

Jacking up procedure

1 Place chocks against the front wheels.
2 Set a bottle jack or garage jack and jack up the rear of the vehicle.
3 Support the vehicle frame on jack stands on both sides.

WARNING ⚠

- **Chock the wheels firmly to prevent the vehicle from rolling away.**
- **Do not attempt to remove the chocks until the operation is completed.**
- **It is extremely dangerous to support the vehicle with only bottle jack or garage jack. Be sure to additionally support the vehicle frame on jack stands on both sides.**
- **Never attempt to remove any of the bottle jack, garage jack, or jack stands until the operation is completed.**

DIAGNOSIS CODES

1. Diagnosis Codes

- Diagnosis codes indicate the faulty sections of the vehicle.
- A fault can be repaired by reading out the diagnosis code(s) stored in the control unit and performing the remedy for that code(s).
- Diagnosis codes can be displayed in the following two methods. Select either of them according to the system to be diagnosed.
  - Using a scanning tool (General Scanning Tool or Multi-Use Tester)
  - Using flashing of a warning lamp on meter cluster
- The table below indicates the systems for which diagnosis codes can be displayed and the methods usable for individual systems.

1.1 Systems and diagnosis code displaying methods

Warning lamp	System		Diagnosis codes displaying methods		Reference Gr
			Scanning tool	Flashing of warning lamp	
CHECK ENGINE or	Common rail		O	O	13EA
	Turbocharger				15
	Diesel particulate filter				
	Exhaust gas recirculation				17
	Starter continuous energizing preventing function, Preheating system				54
MVCU	Vehicle speed limitation (SLD)		O	O	13EB
	Auto cruise				
	Automatic transmission	1000RDS, 2200RDS	△	–	23A
		3000RDS	△	Displayed on the range selector (See Gr23B.)	23B
ABS or ABS	Anti-lock brake system		O	O	35E

△: Can be displayed by the Allison exclusive diagnosis tool.

1.2 Types of diagnosis codes <Engine control>

- The diagnosis codes has no distinction of present and past.
- If a fault occurs and an electronic control unit detects the fault, the electronic control unit will store a diagnosis code in memory after a diagnosing time predetermined for each fault content and turn on the warning lamp.
- When the fault has solved, the warning lamp goes off, but the diagnosis code still remains in the memory.
- The diagnosis codes can be erased by using the scanning tool (General Scanning Tool or Multi-Use Tester) or they will be erased automatically after a specified period.

1.3 Types of diagnosis codes <Except engine control>

(1) System for which present and past codes are discriminately displayed

(1.1) Present diagnosis code

- Fault developed in the vehicle after the starter switch is set to ON is indicated by corresponding diagnosis code.
- The fault warning lamp is lit at the same time.

(1.2) Past diagnosis code

- Past fault developed in the vehicle is indicated by corresponding diagnosis code stored in the memory of the electronic control unit.
- With the vehicle restored to its normal condition or the starter switch turned from OFF to ON after inspection or repair against present diagnosis codes, the present diagnosis code is stored as past diagnosis codes in the memory of the electronic control unit.
- The warning lamp is not lit because the indicated fault is not present one.

2. Reading and Erasing the Diagnosis Code

2.1 Using a Multi-Use Tester

(1) Connecting a Multi-Use Tester

Special tools

Mark	Tool name and shape	Part No.	Application
a	PC 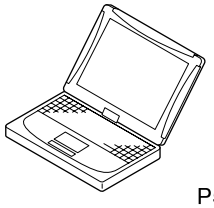 P57295	FMS-E08-1 (Multi-Use Tester-III version)	Data transmission to/from V.C.I.
b	V.C.I. 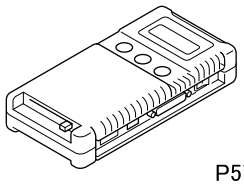 P57296	MH062927	Data transmission between electronic control unit and PC
c	Multi-Use Tester test Harness E A: Harness for inspection and drive recorder B: Harness for drive recorder C: Drive recorder harness D: Cigarette lighter plug harness 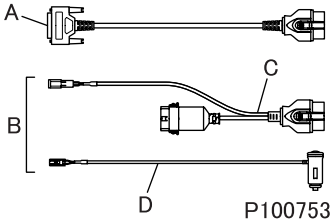 P100753	MH063659 A: MH063661 B: MH063663 C: MH063665 D: MH063666	Power supply to V.C.I. and communication with electronic control unit
d	Multi-Use Tester test harness D (used for extension) 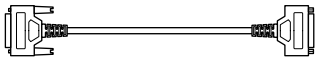 P57299	MH062951	Multi-Use Tester test harness B extension
e	USB cable P57300	MH063668	Communication between V.C.I. and PC

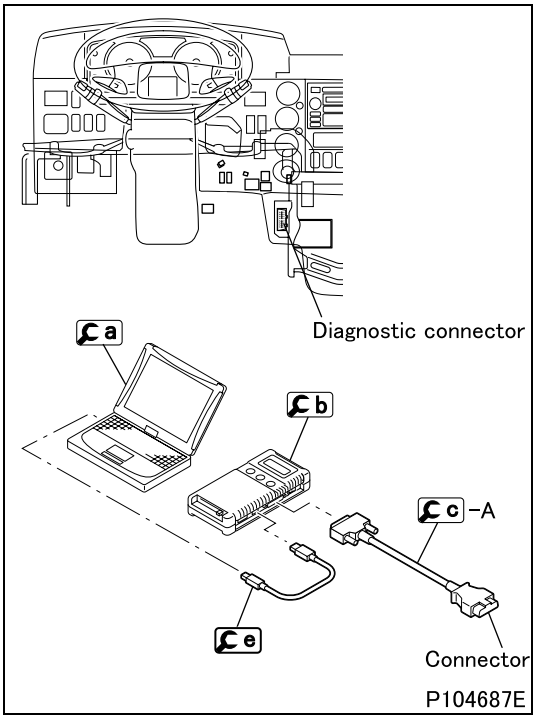

(1.1) To perform system inspection

- Move the starter switch to the LOCK position.
- Connect a, b, c-A and e as shown.
- Connect c-A connector to the diagnostic connector on the vehicle.

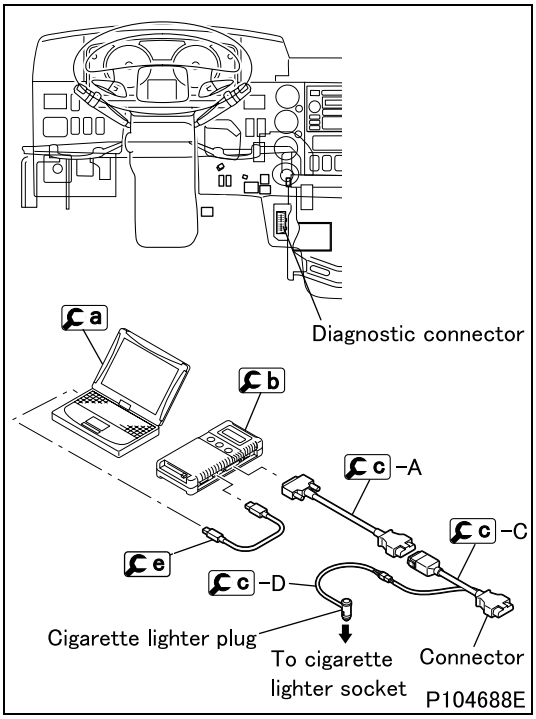

(1.2) To use drive recorder function

- Move the starter switch to the LOCK position.
- Connect a, b, c-A, c-C, c-D and e as shown.
- Connect c-C connector to the diagnostic connector on the vehicle.
- Connect the cigarette lighter plug of c-D to the cigarette lighter socket on the vehicle.

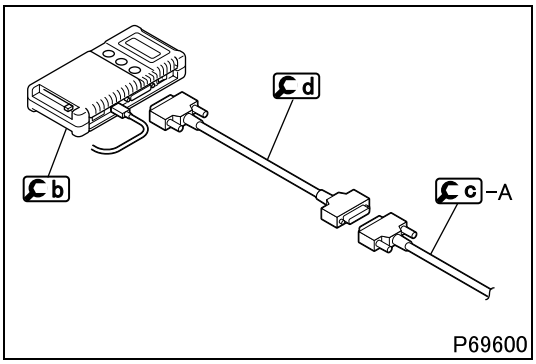

(1.3) To extend the Multi-Use Tester test harness

- Connect d to c-A to extend the test harness to use the Multi-Use Tester outside the vehicle.

(2) Access of diagnosis code

- Set the starter switch to ON.
- Operate the Multi-Use Tester for a display of necessary diagnosis code stored in the memory of the electronic control unit and identify the location of the fault.

(3) Clearing of diagnosis code

- Set the starter switch to ON (the engine not to be started).
- Operate the Multi-Use Tester to delete all the diagnosis codes stored in the memory of the electronic control unit.
- After the diagnosis codes of anti-lock brake system are cleared by the Multi-Use Tester, the anti-lock brake system warning lamp continues illuminating until the starter switch is turned to OFF or until the communication with the Multi-Use Tester ends.

2.2 Using a General Scanning Tool

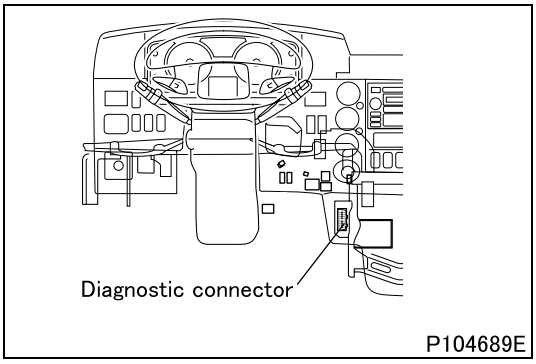

- For the usage of a General Scanning Tool, refer to the instruction manual for that tool.

2.3 Using flashing of a warning lamp on meter cluster

(1) Engine control, auto cruise, vehicle speed limitation

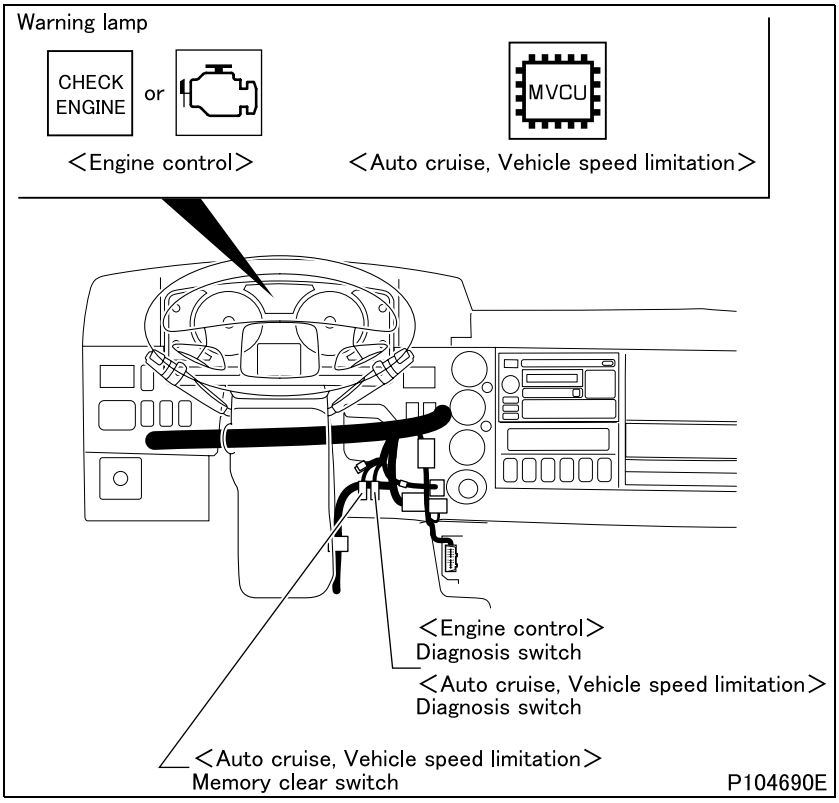

- Using the diagnosis and memory clear switches, display diagnosis codes.

CAUTION ⚠

- **Opening the memory clear switch followed by its reconnection will erase the stored diagnosis codes from the memory. To avoid inadvertently erasing necessary codes, be sure to read well the procedure described below before handling diagnosis codes. <Except engine control>**

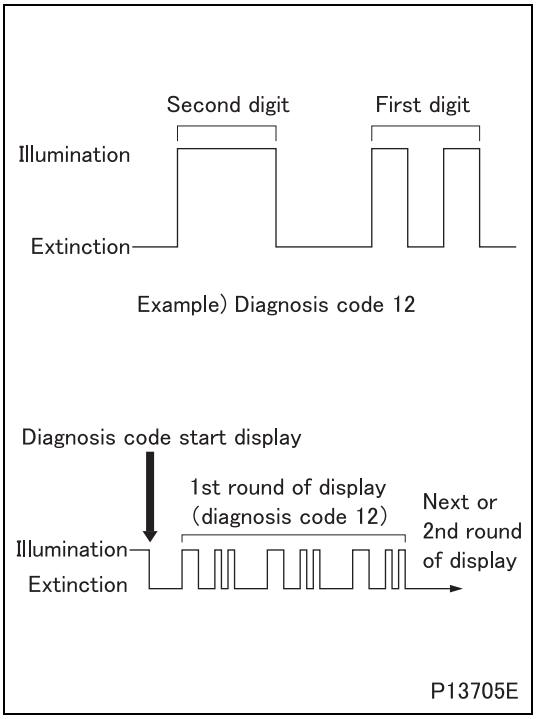

(1.1) Reading diagnosis codes by flashing of warning lamp

- To read a diagnosis code, observe how may times the warning lamp flashes and how long each illumination lasts.
- The duration of illumination differs between the first and second digits.
  - Second digit: 1.2 sec.
  - First digit: 0.4 sec.
- A diagnosis code consists of the flashing of second digit and the flashing of first digit in that order. If a diagnosis code has “0” in the second digit, only the first digit will be displayed.
- The diagnosis code 01 will be displayed if the system is normal.
- The same diagnosis code will be displayed 3 times in a row before moving to the display of the next code.
- After the last diagnosis code is displayed, the first code will be displayed again 3 times in a row and then the subsequent codes. This will be repeated.

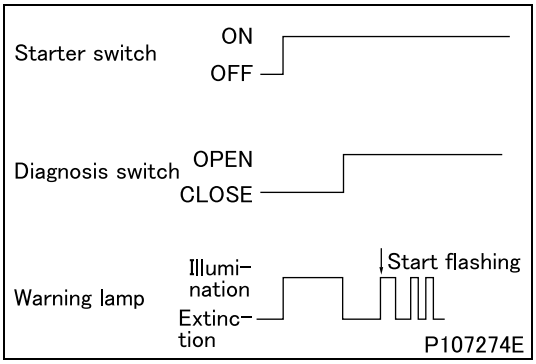

(1.2) Reading and erasing diagnosis codes <Engine control>

● Reading diagnosis codes

- Turn the starter switch ON.
- Remove the diagnosis switch.
- Diagnosis codes will be displayed by flashing of the warning lamp.
- When the diagnosis switch is connected, electronic control unit will stop (terminate) displaying diagnosis codes.

● Erasing diagnosis codes

- Erase diagnosis codes with a scanning tool (general scanning tool or Multi-Use Tester).

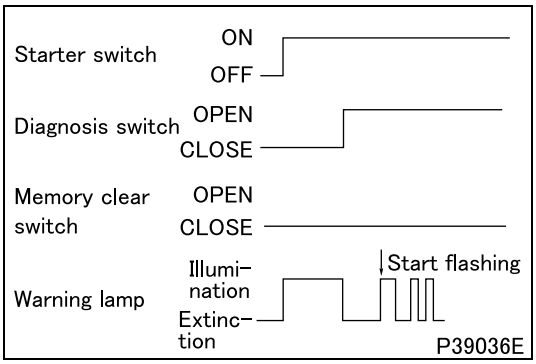

(1.3) Reading and erasing diagnosis codes <Except engine control>

● Present diagnosis codes

- Turn the starter switch ON.
- Remove the diagnosis switch.
- Present diagnosis codes will be displayed by flashing of the warning lamp.
- When the diagnosis switch is connected, electronic control unit will stop (terminate) displaying diagnosis codes.

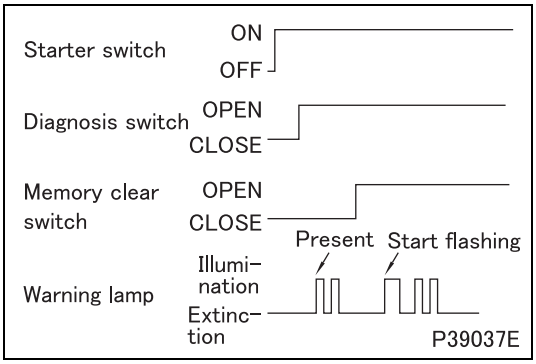

● Present and past diagnosis codes

- Turn the starter switch to the ON position.
- Open the diagnosis switch.
- Present diagnosis codes will be displayed by flashing of the warning lamp.
- Open the memory clear switch.
- Present and past diagnosis codes will be displayed by flashing of the warning lamp.
- Turn the starter switch to the OFF position and connect the memory clear switch and diagnosis switch to terminate the diagnosis code displaying mode.

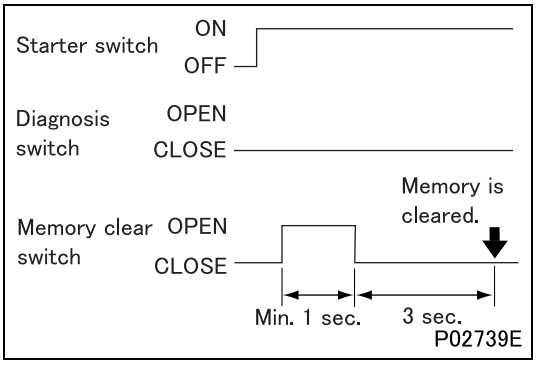

● Erasing diagnosis codes

- Turn the starter switch to the ON position (do not start the engine).
- Open the memory clear switch and reconnect it; all diagnosis codes stored in electronic control unit memory will be erased.
  To cancel diagnosis code erasure after opening the memory clear switch, turn the starter switch to the OFF position and then reconnect the memory clear switch.

(2) Anti-lock brake system

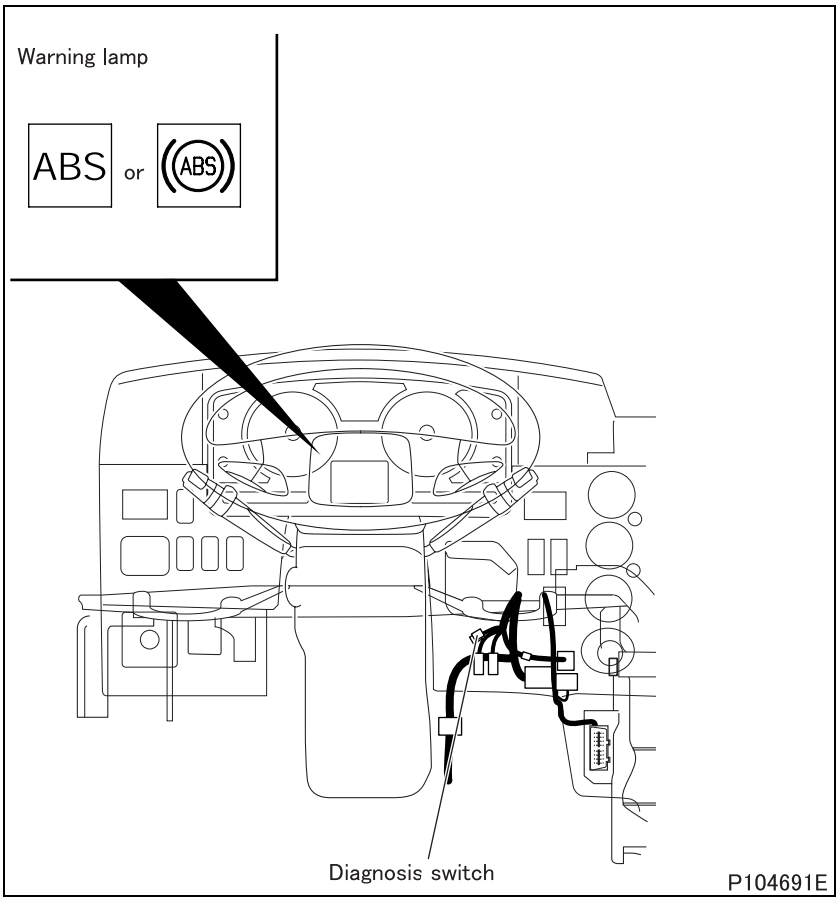

- Use the diagnosis switch to have diagnosis codes shown.

CAUTION ⚠

- **Diagnosis codes are cleared by diagnosis switch operation for connection and release. Be sure to familiarize with the sequence before operation.**

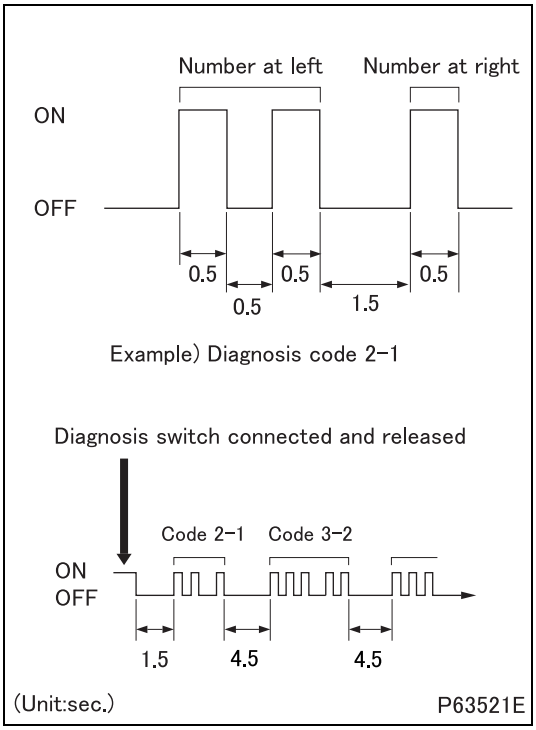

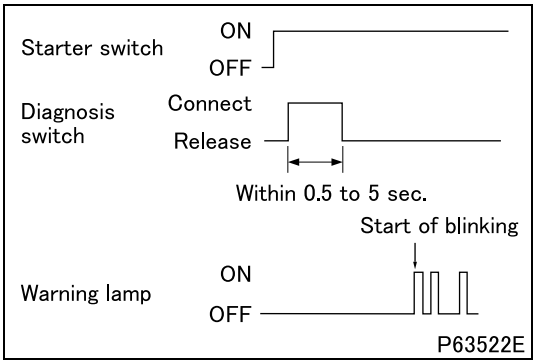

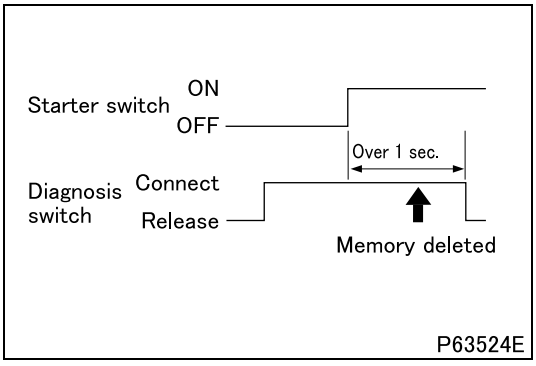

(2.1) Observation of diagnosis code

- Observe diagnosis codes according to the number and time interval of blinks of the warning lamp.
- Diagnosis codes are indicated in the order of the numbers of blinks at left and right.
- Diagnosis codes are given, one at a time.

(2.2) Indication of diagnosis code

- Set the starter switch to ON.
- Connect the diagnosis switch, then release.
- Diagnosis codes are indicated according to the number of blinks of the warning lamp.
- With the starter switch turned back to OFF or all diagnosis codes displayed, the electronic control unit stops (finishes) the code indication.

(2.3) Clearing of diagnosis code

- Connect the diagnosis switch with the starter switch in the OFF position, then set the starter switch to ON. This deletes all the diagnosis codes stored in the memory of the electronic control unit. To abort the clearing of diagnosis codes after the diagnosis switch is connected, release the diagnosis switch with the starter switch left in the OFF position.
- After the clearing of diagnosis codes, do not forget to release the diagnosis switch.

CAUTION ⚠

- **If the diagnosis switch is not released, the contents of the memory are deleted each time the starter switch is set to ON.**

M E M O

TABLE OF STANDARD TIGHTENING TORQUES

- Use specified bolts and nuts, tightening them to the torques specified in this section unless otherwise stated.
- Threaded portions and bearing surfaces should be dry.
- Where the property class differs between the nut and bolt (or stud bolt), use the tightening torque specified in the table for the bolt.

Hexagon Headed Bolt, Stud Bolt (Unit: N·m {ft.lbs, kgf·m})

Strength	4T		7T		8T	
Identification symbol / Nominal diameter	(Stud)		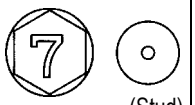 (Stud)		(Stud)	
M5	2 to 3 {1.5 to 2.2, 0.2 to 0.3}	–	4 to 6 {3.0 to 4.4, 0.4 to 0.6}	–	5 to 7 {3.7 to 5.2, 0.5 to 0.7}	–
M6	4 to 6 {3.0 to 4.4, 0.4 to 0.6}	–	7 to 10 {5.2 to 7.4, 0.7 to 1.0}	–	8 to 12 {5.9 to 8.9, 0.8 to 1.2}	–
M8	9 to 13 {6.6 to 9.6, 0.9 to 1.3}	–	16 to 24 {12 to 18, 1.7 to 2.5}	–	19 to 28 {14 to 21, 2.0 to 2.9}	–
M10	18 to 27 {13 to 20, 1.8 to 2.7}	17 to 25 {13 to 18, 1.8 to 2.6}	34 to 50 {25 to 37, 3.5 to 5.1}	32 to 48 {24 to 35, 3.3 to 4.9}	45 to 60 {33 to 44, 4.5 to 6.0}	37 to 55 {27 to 41, 3.8 to 5.7}
M12	34 to 50 {25 to 37, 3.4 to 5.1}	31 to 45 {23 to 33, 3.1 to 4.6}	70 to 90 {52 to 66, 7.0 to 9.5}	65 to 85 {48 to 63, 6.5 to 8.5}	80 to 105 {59 to 77, 8.5 to 11}	75 to 95 {55 to 70, 7.5 to 10}
M14	60 to 80 {44 to 59, 6.0 to 8.0}	55 to 75 {41 to 55, 5.5 to 7.5}	110 to 150 {81 to 110, 11 to 15}	100 to 140 {74 to 105, 11 to 14}	130 to 170 {96 to 125, 13 to 17}	120 to 160 {89 to 120, 12 to 16}
M16	90 to 120 {66 to 89, 9 to 12}	90 to 110 {66 to 81, 9 to 11}	170 to 220 {125 to 160, 17 to 23}	160 to 210 {120 to 155, 16 to 21}	200 to 260 {145 to 190, 20 to 27}	190 to 240 {140 to 175, 19 to 25}
M18	130 to 170 {96 to 125, 14 to 18}	120 to 150 {89 to 110, 12 to 16}	250 to 330 {185 to 245, 25 to 33}	220 to 290 {160 to 215, 23 to 30}	290 to 380 {215 to 280, 30 to 39}	250 to 340 {185 to 250, 26 to 35}
M20	180 to 240 {130 to 175, 19 to 25}	170 to 220 {125 to 160, 17 to 22}	340 to 460 {250 to 340, 35 to 47}	310 to 410 {230 to 300, 32 to 42}	400 to 530 {295 to 390, 41 to 55}	360 to 480 {265 to 355, 37 to 49}
M22	250 to 330 {185 to 245, 25 to 33}	230 to 300 {170 to 220, 23 to 30}	460 to 620 {340 to 455, 47 to 63}	420 to 560 {310 to 415, 43 to 57}	540 to 720 {400 to 530, 55 to 73}	490 to 650 {360 to 480, 50 to 67}
M24	320 to 430 {235 to 315, 33 to 44}	290 to 380 {215 to 280, 29 to 39}	600 to 810 {440 to 595, 62 to 83}	540 to 720 {400 to 530, 55 to 73}	700 to 940 {515 to 695, 72 to 96}	620 to 830 {455 to 610, 63 to 85}

Hexagon Headed Flange Bolt (Unit: N·m {ft.lbs, kgf·m})

Strength	4T		7T		8T	
Identification symbol / Nominal diameter		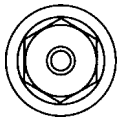		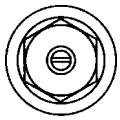		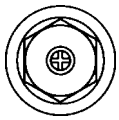
M6	4 to 6 {3.0 to 4.4, 0.4 to 0.6}	–	8 to 12 {5.9 to 8.9, 0.8 to 1.2}	–	10 to 14 {7.4 to 10, 1.0 to 1.4}	–
M8	10 to 15 {7.4 to 11, 1.0 to 1.5}	–	19 to 28 {14 to 21, 2.0 to 2.9}	–	22 to 33 {16 to 24, 2.3 to 3.3}	–
M10	21 to 31 {15 to 23, 2.1 to 3.1}	20 to 29 {15 to 21, 2.0 to 3.0}	45 to 55 {33 to 41, 4.5 to 5.5}	37 to 54 {27 to 40, 3.8 to 5.6}	50 to 65 {37 to 48, 5.0 to 6.5}	50 to 60 {37 to 44, 5.0 to 6.5}
M12	38 to 56 {28 to 41, 3.8 to 5.5}	35 to 51 {26 to 38, 3.5 to 5.2}	80 to 105 {59 to 77, 8.0 to 10.5}	70 to 95 {52 to 95, 7.5 to 9.5}	90 to 120 {66 to 89, 9 to 12}	85 to 110 {63 to 81, 8.5 to 11}

Hexagon Nuts (Unit: N·m {ft.lbs, kgf·m})

Strength	4T		6T	
Identification symbol			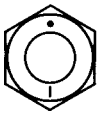 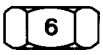	
Nominal diameter	Standard screw thread	Coarse screw thread	Standard screw thread	Coarse screw thread
M5	2 to 3 {1.5 to 2.2, 0.2 to 0.3}	–	4 to 6 {3.0 to 4.4, 0.4 to 0.6}	–
M6	4 to 6 {3.0 to 4.4, 0.4 to 0.6}	–	7 to 10 {5.2 to 7.4, 0.7 to 1.0}	–
M8	9 to 13 {6.6 to 9.6, 0.9 to 1.3}	–	16 to 24 {12 to 18, 1.7 to 2.5}	–
M10	18 to 27 {13 to 20, 1.8 to 2.7}	17 to 25 {13 to 18, 1.8 to 2.6}	34 to 50 {25 to 37, 3.5 to 5.1}	32 to 48 {24 to 35, 3.3 to 4.9}
M12	34 to 50 {25 to 37, 3.4 to 5.1}	31 to 45 {23 to 33, 3.1 to 4.6}	70 to 90 {52 to 66, 7.0 to 9.5}	65 to 85 {48 to 63, 6.5 to 8.5}
M14	60 to 80 {44 to 59, 6.0 to 8.0}	55 to 75 {41 to 55, 5.5 to 7.5}	110 to 150 {81 to 110, 11 to 15}	100 to 140 {74 to 105, 11 to 14}
M16	90 to 120 {66 to 89, 9 to 12}	90 to 110 {66 to 81, 9 to 11}	170 to 220 {125 to 160, 17 to 23}	160 to 210 {120 to 155, 16 to 21}
M18	130 to 170 {96 to 125, 14 to 18}	120 to 150 {89 to 110, 12 to 16}	250 to 330 {185 to 245, 25 to 33}	220 to 290 {160 to 215, 23 to 30}
M20	180 to 240 {130 to 175, 19 to 25}	170 to 220 {125 to 160, 17 to 22}	340 to 460 {250 to 340, 35 to 47}	310 to 410 {230 to 300, 32 to 42}
M22	250 to 330 {185 to 245, 25 to 33}	230 to 300 {170 to 220, 23 to 30}	460 to 620 {340 to 455, 47 to 63}	420 to 560 {310 to 415, 43 to 57}
M24	320 to 430 {235 to 315, 33 to 44}	290 to 380 {215 to 280, 29 to 39}	600 to 810 {440 to 595, 62 to 83}	540 to 720 {400 to 530, 55 to 73}

Hexagon Flange Nuts (Unit: N·m {ft.lbs, kgf·m})

Strength	4T	
Identification symbol	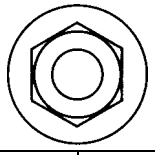	
Nominal diameter	Standard screw thread	Coarse screw thread
M6	4 to 6 {3.0 to 4.4, 0.4 to 0.6}	–
M8	10 to 15 {7.4 to 11, 1.0 to 1.5}	–
M10	21 to 31 {15 to 23, 2.1 to 3.1}	20 to 29 {15 to 21, 2.0 to 3.0}
M12	38 to 56 {28 to 41, 3.8 to 5.6}	35 to 51 {26 to 38, 3.5 to 5.2}

TABLE OF STANDARD TIGHTENING TORQUES

Tightening Torque for General-Purpose Flare Nut (Unit: N·m {ft.lbs, kgf·m})

Pipe diameter	ϕ4.76 mm {0.19 in.}	ϕ6.35 mm {0.25 in.}	ϕ8 mm {0.31 in.}	ϕ10 mm {0.39 in.}	ϕ12 mm {0.47 in.}	ϕ15 mm {0.59 in.}
Tightening torque	17 {13, 1.7}	25 {18, 2.6}	39 {29, 4.0}	59 {44, 6.0}	88 {65, 9.0}	98 {72, 10}

Tightening Torque for General-Purpose Air Piping Nylon Tube (DIN Type) (Unit: N·m {ft.lbs, kgf·m})

Nominal diameter × wall thickness	6 × 1 mm {0.24 × 0.039 in.}	10 × 1.25 mm {0.39 × 0.049 in.}	12 × 1.5 mm {0.47 × 0.059 in.}	15 × 1.5 mm {0.59 × 0.059 in.}
Tightening torque	20^{+6}_{0} {$15^{+4.4}_{0}$ $2.0^{+0.6}_{0}$}	34^{+10}_{0} {$25^{+7.4}_{0}$ $3.5^{+1.0}_{0}$}	49^{+10}_{0} {$36^{+7.4}_{0}$ $5.0^{+1.0}_{0}$}	54^{+5}_{0} {$40^{+3.7}_{0}$ $5.5^{+0.5}_{0}$}

Tightening Torque for General-Purpose Air Piping Nylon Tube (SAE Type) (Unit: N·m {ft.lbs, kgf·m})

Nominal diameter	1/4 in.	3/8 in.	1/2 in.	5/8 in.
Tightening torque	13^{+4}_{0} {$9.6^{+3.0}_{0}$ $1.3^{+0.4}_{0}$}	29^{+5}_{0} {$21^{+3.7}_{0}$ $3.0^{+0.5}_{0}$}	49^{+5}_{0} {$36^{+3.7}_{0}$ $5.0^{+0.5}_{0}$}	64^{+5}_{0} {$47^{+3.7}_{0}$ $6.5^{+0.5}_{0}$}

Group 01

Maintenance Schedule

Table of Contents

Back

Home

MITSUBISHI FUSO TRUCK OF AMERICA, Inc.

Pub.No.TWME0709-01

INDEX

HOW TO READ THE MAINTENANCE SCHEDULE TABLES 01-2

MAINTENANCE SCHEDULE TABLES 01-4

MAINTENANCE OPERATIONS 01-12

LUBRICATION TABLES 01-18

LUBRICATION 01-20

HOW TO READ THE MAINTENANCE SCHEDULE TABLES

Example Table:

*1: 30,000 km/18,000 miles or 6 months, whichever occurs first
*2: 60,000 km/36,000 miles or 12 months, whichever occurs first
*3: FK61
*4: FK62, FK65, FM
*5: FK65
*6: FK
Ⓔ: Exhaust emission items
Ⓝ: Noise control items

Item (1)	Time of inspection and maintenance (2)					Working procedures (3)	Reference Gr (4)
	Pre-operational checks	New vehicle at 4,000 km/ 2,500 miles	Inspection interval: Every 10,000 km/ 6,000 miles	Inspection interval: Every 30,000 km/ 18,000 miles *1	Inspection interval: Every 60,000 km/ 36,000 miles *2		
ENGINE							
Air, fuel, oil or coolant leaks from engine	×		×			Check engine for air, fuel, oil and coolant leaks.	Gr11, 12, 13A, 14
ⒺⓃ Engine starting performance, speed, noise and exhaust gas conditions			×			Check for engine starting performance, idling speed, abnormal engine noise, black smoke or other abnormal exhaust gas during idling and acceleration. Check engine speed on tachometer.	Gr11, 13A, 15
Retightening, inlet and exhaust manifold bolts					×	Retighten. Checking of the tightening torque is unnecessary.	Gr15
Ⓔ Valve cle…					×	Check valve clearance with thic…	Gr11

(1) This column contains the maintenance and inspection items.

(2) The periods between inspection and service are based on the assumption that the vehicle will be driven approximately 60,000 kilometers (36,000 miles) per year.
Inspections which must be made are indicated by an "×" or by the appropriate period between servicing.

(3) This column provides a simplified explanation of the operational procedures involved for each inspection or maintenance item.

(4) The Gr. No. refers to the "group number" in this Service Manual. For visual checks and simple inspections, see the sections labelled "Working Procedures".

M E M O

MAINTENANCE SCHEDULE TABLES

*1: 30,000 km/18,000 miles or 6 months, whichever occurs first
*2: 60,000 km/36,000 miles or 12 months, whichever occurs first
*3: FK61
*4: FK62, FK65, FM
*5: FK65
*6: FK
Ⓔ: Exhaust emission items
Ⓝ: Noise control items

Item	Time of inspection and maintenance					Working procedures	Reference Gr
	Pre-operational checks	New vehicle at 4,000 km/ 2,500 miles	Inspection interval: Every 10,000 km/ 6,000 miles	Inspection interval: Every 30,000 km/ 18,000 miles *1	Inspection interval: Every 60,000 km/ 36,000 miles *2		
ENGINE							
Air, fuel, oil or coolant leaks from engine	×		×			Check engine for air, fuel, oil and coolant leaks.	Gr11, 12, 13A, 14
ⒺⓃ Engine starting performance, speed, noise and exhaust gas conditions			×			Check for engine starting performance, idling speed, abnormal engine noise, black smoke or other abnormal exhaust gas during idling and acceleration. Check engine speed on tachometer.	Gr11, 13A, 15
Retightening, inlet and exhaust manifold bolts					×	Retighten. Checking of the tightening torque is unnecessary.	Gr15
Ⓔ Valve clearance					×	Check valve clearance with feeler gauge.	Gr11
Ⓔ Oil filter replacement			Every 20,000 km/ 12,000 miles On new vehicle, also replace at the first 10,000 km/ 6,000 miles.			Replace element.	Gr12
Ⓔ Fuel filter replacement				×		Replace element.	Gr13A
Ⓔ Draining water and sediment in fuel tank			Every 24 months			Remove fuel tank drain plug and remove water and sediment.	Gr13A
Retightening the fuel tank bracket bolts			×			Check the bolts for looseness and retighten to a torque of 69 to 93 Nm (51 to 68 lb.ft, 7.0 to 9.5 kgm).	Gr13A
Ⓔ Check fuel line outside the engine compartment			Every 24 months			Check fuel line outside the engine compartment. Replace if necessary.	Gr13A
ⒺⓃ Belt tension and damage	×		×			Press midpoint of belt firmly with finger to measure deflection and check for belt damage.	Gr14
Coolant level and leaks from cooling system	×					Check coolant level and if level is low, check for coolant leaks.	Gr14
Coolant replacement			Every 24 months			Replace with new coolant.	Gr14
Radiator cap condition			×			Check radiator cap for sealing and mounting condition.	Gr14
Ⓔ Cooling system hose clamp position and clamping condition.			×			Check clamp position and clamping condition of cooling system hose.	Gr14

Item	Time of inspection and maintenance					Working procedures	Reference Gr
	Pre-operational checks	New vehicle at 4,000 km/ 2,500 miles	Inspection interval				
			Every 10,000 km/ 6,000 miles	Every 30,000 km/ 18,000 miles *1	Every 60,000 km/ 36,000 miles *2		
Ⓔ Turbocharger rotor play			Every 250,000 km/ 150,000 miles			Check rotor for excessive end play by using a dial indicator.	Gr15
ⒺⓃ Cleaning the air cleaner element	×		×			Clean the air cleaner element. The element must be cleaned when the red dust indicator signal appears, irrespective of the cleaning interval.	Gr15
ⒺⓃ Air cleaner element replacement			Every 80,000 km/ 48,000 miles or 12 months			Replace element.	Gr15
ⒺⓃ Damage of air intake system, looseness of clamp and loss of parts			×			Check air intake system for damage and inspect all parts for installation.	Gr15
ⒺⓃ Exhaust system			×			Check the exhaust system for damage, corrosion and loose connection causing leakage.	Gr15
Ⓔ PCV (Positive Crankcase Ventilation) valve element replacement			×			Replace element.	Gr17
Ⓔ DPF pressure sensor hose replacement			Every 24 months			Replace DPF pressure sensor hose.	Gr15
Starter function					×	Operate starter switch and check the switch for proper function.	Gr54
Alternator function					×	Check for function with a circuit tester.	Gr54
Ⓔ DPF			Every 10,000 km/ 6,000 miles or 12 months			Check DPF for blocking.	Gr15
			First 320,000 km/200,000 miles Every 240,000 km/150,000 miles thereafter			DPF Ash Cleaning	
POWER TRAIN							
Air or oil leaks from power train			×			Check power train for air and oil leaks.	Gr21, 22, 23, 25
Clutch pedal play			×			Press clutch pedal lightly and check that its play is adequate.	Gr21
Clutch function			×			• Press the clutch pedal to check for unusual noise or stiffness. Also check if gear engages quietly. • Check that clutch does not slip and engages smoothly.	Gr21

MAINTENANCE SCHEDULE TABLES

Item	Time of inspection and maintenance					Working procedures	Reference Gr
	Pre-operational checks	New vehicle at 4,000 km/ 2,500 miles	Inspection interval				
			Every 10,000 km/ 6,000 miles	Every 30,000 km/ 18,000 miles *1	Every 60,000 km/ 36,000 miles *2		
Manual transmission gearshift control looseness				×		In NEUTRAL position, check gearshift lever for looseness. With gearshift lever in each gear position, check all gears engage smoothly without excessive looseness. Also check that control cable is not damaged.	Gr22
Automatic transmission range selector linkage condition *6				×		Shifting to each position must be correct and secure.	Gr23A
Propeller shaft couplings and bearings looseness		×	×			Check flange yoke bolts and center bearing bolts for looseness.	Gr25
			×			• Turn propeller shaft manually to check for loose spline coupling. • Check for looseness between spider and needle roller bearing.	
FRONT AND REAR AXLES							
Axle shaft torsion and cracks					×	Remove axle shaft and check for torsion, bend, and cracks.	Gr27
Front wheel hub bearing looseness				×		With front axle jacked up, move wheel up and down by holding tire's top and bottom to check for bearing looseness.	Gr26
Rear wheel hub bearing damage					×	Disassemble rear wheel and check for hub bearing wear and damage.	Gr27
Retightening wheel nuts		×	×			Check wheel nuts for looseness.	P01-10
Disc wheel damage			×			Check disc wheel for corrosion, deformation and cracks.	Gr31
Tire inflation pressure, cracking, tread groove depth, abnormal wear, etc.	×		×			• Measure inflation pressure with a tire pressure gauge, and check that tire tread groove is deep enough. • Check tire tread and side walls for cracks, damage, uneven, ridgy, and other abnormal wear.	P01-10
Tire rotation			×			Rotate all tires.	P01-10
SUSPENSION SYSTEM							
Looseness, play and damage of suspension system				×		Check suspension system for looseness, play and damage.	Gr33, 34
Damage and looseness of leaf springs	×			×		Check leaf springs for damage and looseness.	Gr33, 34
Retightening U-bolts		×		×		Check U-bolts for looseness.	Gr33, 34
Air leak and damage of air spring *5			×			Check air spring for air leak and damage of diaphragm. Check the air spring height.	Gr34B
Air spring diaphragm replacement *5			Every 36 months			Check diaphragm and replace if necessary.	Gr34B
Oil leaks and damage of shock absorbers				×		Check for oil leaks from and damage of cylinders and other parts.	Gr33, 34

Item	Time of inspection and maintenance					Working procedures	Reference Gr
	Pre-operational checks	New vehicle at 4,000 km/ 2,500 miles	Inspection interval				
			Every 10,000 km/ 6,000 miles	Every 30,000 km/ 18,000 miles *1	Every 60,000 km/ 36,000 miles *2		
BRAKING SYSTEM							
Air pressure and its charging speed	×					After discharging air from air tank, start and run the engine at idle and measure time taken to charge air to specified pressure in air tank.	Gr35A, B
Air and fluid leaks from braking system			×			Check braking system for air and fluid leaks.	Gr35A, B
Looseness, play and damage of braking system parts			×			Check braking system parts for looseness, play and damage.	Gr35A, B
Condensation in air tank	×					Open drain cock, and check for presence of condensation in air tank.	Gr35A, B
Operation of brake pedal			×			Depress the brake pedal and release it, checking for the sound of air being released from the brake valve and to ensure that the pedal returns normally without catching. Press the brake pedal with a finger to the point where resistance is felt and measure the distance (play) over which the pedal has moved.	Gr35A, B
Foot brake effectiveness	×		×			While driving the vehicle at low speed, check braking effect and check for uneven braking.	Gr35A, B
Operation of exhaust brake	×		×			Check for exhaust brake operation.	Gr35A, B
Exhaust brake control cylinder packing replacement			Every 12 months			Check exhaust brake control cylinder packing, replace if necessary.	Gr35A, B
Operation of air drier			×			Open drain cock of air tank and make sure there is no drainage.	Gr35A, B
Check drain from air drier exhaust port			×			Check to see that oil is not discharged abnormally from exhaust port of air drier.	Gr35A, B
Air drier disassembly and check					×	Disassemble air drier and check every part of it. If more than 1/5 of the drying agent is discolored, replace drying agent.	Gr35A, B
Replacement of drying agent in air drier			Every 60,000 km/ 36,000 miles or 12 months			Disassemble air drier and replace drying agent and rubber parts.	Gr35A, B
Brake shoe clearance				×		Measure clearance with feeler gauge.	Gr35A, B
Brake lining wear				×		Check for lining wear.	Gr35A, B
Brake drum wear					×	Disassemble and check drum for wear, cracks and damage.	Gr35A, B
Parking brake effectiveness			×			On a slope, check that vehicle can be held stationary.	Gr36
Parking brake operation *4	×		×			• Check for operation of parking brake control valve. • Check operation when brake line air pressure is reduced.	Gr36B

Item	Time of inspection and maintenance					Working procedures	Reference Gr
	Pre-operational checks	New vehicle at 4,000 km/ 2,500 miles	Inspection interval				
			Every 10,000 km/ 6,000 miles	Every 30,000 km/ 18,000 miles *1	Every 60,000 km/ 36,000 miles *2		
Parking brake lever stroke *3	×		×			With lever full pulled, check that lever is locked completely and that there is allowance in pulling stroke.	Gr36A
Parking brake drum and lining wear *3					×	Disassemble and check drum for wear, cracks and damage and lining for wear.	Gr36A
Damage on boot of brake chamber expander *4					×	Check boot at expander for damage.	Gr35B
Replacement of piston cup and boot of front and rear brake wheel cylinder *3			Every 12 months			Check piston cup and boot of front and rear brake wheel cylinder; replace if necessary.	Gr35A
Replacement of cup packing and rubber parts of brake booster *3			Every 12 months			Check cup packing and rubber parts of brake booster; replace if necessary.	Gr35A
Replacement of brake hose			Every 12 months			Check brake hose; replace if necessary.	Gr35A, B
Replacement of packing and rubber parts of brake valve			Every 12 months			Check packing and rubber parts of brake valve; replace if necessary.	Gr35A, B
Replacement of hoses connecting air compressor to air dryer			Every 12 months			Replace hoses connecting air compressor to air dryer.	Gr35A, B
Replacement of check valve			Every 24 months			Replace check valve.	Gr35A, B
Replacement of cup packing and rubber parts of brake booster *3			Every 24 months			Replace cup packing and rubber parts of brake booster.	Gr35A
Replacement of tube of brake fluid reservoir tank *3			Every 24 months			Check and replace tube of brake fluid reservoir tank.	Gr35A
Replacement of packing and rubber parts of front and rear brake chamber *4			Every 24 months			Replace packing and rubber parts of front and rear brake chamber.	Gr35B
Replacement of rubber parts of front and rear brake expander *4			Every 36 months			Replace rubber parts of front and rear brake expander.	Gr35B
Replacement of piggy back of rear brake chamber *4			Every 36 months			Replace piggy back of rear brake chamber.	Gr35B
STEERING SYSTEM							
Fluid leaks from steering system			×			Check steering system for fluid leaks.	Gr37
Steering wheel play	×		×			Turn steering wheel right and left to measure play at steering wheel rim. Measure while engine is running.	Gr37
Steering operating condition	×		×			Check steering wheel to see if it vibrates, pulls to one side or requires unusual steering effort.	Gr37
Looseness and play of steering system (including hoses and pipes)			×			• Check steering system for looseness and play. • Check power steering hoses and pipes for looseness.	Gr37

Item	Time of inspection and maintenance					Working procedures	Reference Gr
	Pre-operational checks	New vehicle at 4,000 km/ 2,500 miles	Inspection interval				
			Every 10,000 km/ 6,000 miles	Every 30,000 km/ 18,000 miles *1	Every 60,000 km/ 36,000 miles *2		
Wheel alignment					×	Measure toe-in, camber, caster and kingpin inclination angles.	Gr26
Right and left turning angles and power steering function					×	• Check that stopper bolt is sufficiently tight without damage and that steering linkage operates smoothly until blocked by stopper bolt. • Check that steering wheel does not contact other parts.	Gr26
Power steering booster and oil pump internal rubber parts replacement			Every 48 month			Replace internal rubber parts.	Gr37
Power steering hose replacement			Every 48 month			Replace power steering hose.	Gr37
Drag link ball joint dust cover				×		Check the dust cover for wear, cracks and other damage.	Gr37
CAB AND FRAME							
Looseness and damage of chassis and body			×			• Check frame, crossmembers and other parts for cracks and damage and check for loose rivets. • Also, check for body damage and loose mounting bolts.	Gr41, 42
Heater and defroster operation			×			Check operation and installation of defroster.	Gr55
Condition of rearview mirrors and reflectors	×					Check reflecting condition, stains and damage.	Gr51
Door lock function			×			Check door lock mechanism for proper functioning.	Gr43
Seat belt mounting condition			×			Check seat belt for damage, buckle and retracting function and mounting condition.	Gr52
ELECTRICAL SYSTEM							
Looseness and damage of electrical wiring and connections			×			Check wiring, connectors and battery terminals for looseness and corrosion.	Gr54
Battery electrolyte level and specific gravity			Every 20,000 km/ 12,000 miles			• Check electrolyte level. • Measure electrolyte specific gravity with hydrometer.	Gr54
Operation and damage of lighting system and turn signal lamps	×		×			Check operation, damage and installation of an lighting units. Also check turn signal lamps operated by turn signal switch.	Gr54
Operation of horn	×		×			Check operation, damage and mounting condition.	Gr54
Operation and fluid level of windshield wiper and washer	×		×			Check operation, damage and mounting condition. Check fluid level in washer tank.	Gr51
Gauge and warning/indicator lamp function	×		×			Check function of gauges and warning/indicator lamps.	Gr54
Switch function					×	Check operation, damage and installation of every switch.	Gr54

MAINTENANCE SCHEDULE TABLES

Item	Time of inspection and maintenance					Working procedures	Reference Gr
	Pre-operational checks	New vehicle at 4,000 km/ 2,500 miles	Inspection interval				
			Every 10,000 km/ 6,000 miles	Every 30,000 km/ 18,000 miles *1	Every 60,000 km/ 36,000 miles *2		
Battery	×					Check the battery fluid level.	Gr54
OTHERS							
Road test of vehicle			×			Drive the vehicle to check for vehicle general operating condition.	–

M E M O

Tire

Service standards (Unit: mm {in.})

Location	Maintenance item		Standard value	Limit	Remedy
–	Depth of tire tread grooves	Normal roads	–	1.6 {0.063}	Replace
		Freeways		3.2 {0.13}	

Tightening torque (Unit: N·m {ft.lbs, kgf·m})

Mark	Parts to be tightened		Tightening torque	Remarks
–	Wheel nut	8-stud	540 to 590 {400 to 435, 55 to 60}	–
		6-stud	370 to 410 {275 to 305, 38 to 42}	

Lubricant and/or sealant

Mark	Points of application	Lubricant and/or sealant	Quantity
–	Wheel nut spherical area	Chassis grease [NLGI No. 1 (Li soap)] or Wheel bearing grease [NLGI No. 2 (Li soap)]	As required
–	Wheel nut (inner) at thread area and spherical area		
–	Thread area of hub bolt		

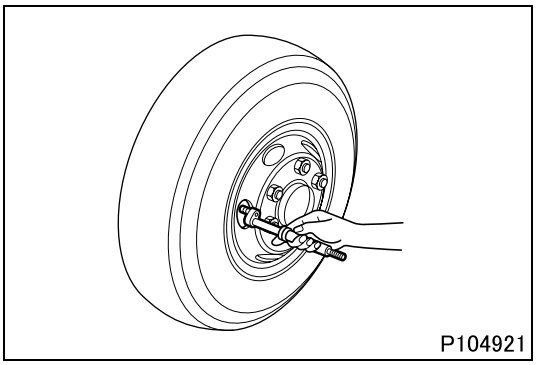

P104921

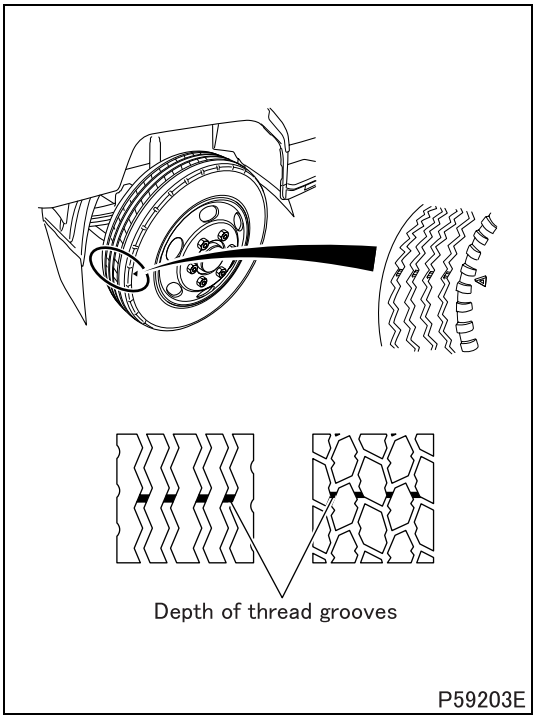

P59203E

Air pressure

Tire air pressure should be checked before the vehicle is driven, while the tires are still cool.

Item / Vehicle model	Tire size	Air pressure kPa {psi, kgf/cm^2}
FK61	225/70R19.5	660 {95, 6.60}
FK62, FK65	10R22.5-14PR	790 {115, 8.06}
FM	11R22.5-14PR	720 {105, 7.20}

CAUTION ⚠

- **Make certain that there is no difference in the air pressure between the inner and outer rear tires.**
- **Make certain you use valve caps on the air valves.**
- **It is not necessary to increase the air pressure for high-speed driving.**

Checking tread depth

- Check all around the tire treads to make sure that the depth of the tread grooves is above the wear limit.
- If the tread grooves are not deep enough, slip sign appears at the position of the ⧋ mark, where the tread groove has worn away.

WARNING ⚠

- **If the depth of the tread grooves is not adequate, the tires will slip on wet roads and present a hazard. Such tires are also extremely dangerous because they are more susceptible to hydroplaning when the vehicle is running at high speeds in the rain. Such tires must be replaced with new ones as soon as possible.**

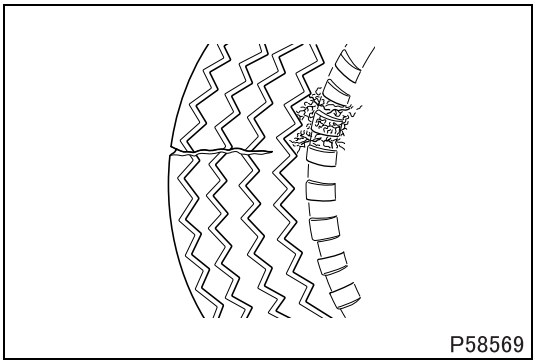
P58569

Checking for cracks, damage, and objects embedded in the treads

- Check the tire treads and walls for cracks and damage.
- Check tire treads for uneven wear or other abnormal wear.
- Check if metal objects or nails have penetrated the tires.
- Check for stones embedded between double tires.

WARNING ⚠

- **Badly damaged or worn tires are extremely dangerous, because they can be punctured more easily when the vehicle is running, they must be replaced with new ones as soon as possible.**

Removing tires

- Jacking up point.
  - For front wheels: Below the front axle
  - For rear wheels <leaf suspension>: Below the rear axle housing
  - For rear wheels <air suspension>: Below the rear leaf springs

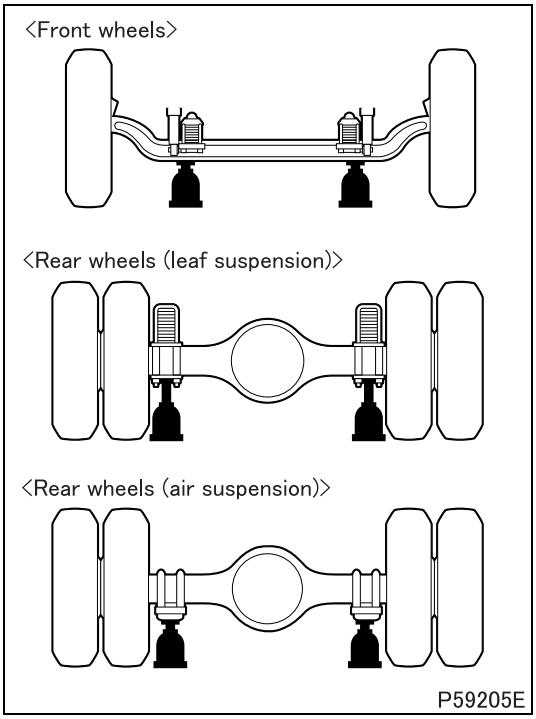

P59205E

WARNING ⚠

- **The jack should be placed on flat, solid ground, and should not be used to raise the vehicle higher than necessary.**
- **Do not use the jack at vehicle locations other than those illustrated.**
- **Keep in mind the danger of slipping jack. Never crawl under the vehicle while the jack is in use or rock the vehicle. Also, do not start the engine while the vehicle is jacked up.**
- **To increase safety, use supports tor the vehicle when it is necessary to leave it jacked up for long periods.**
- **Chock both the tire to be removed and tire diagonally opposite to it so that they will not rotate when you are removing the tire.**

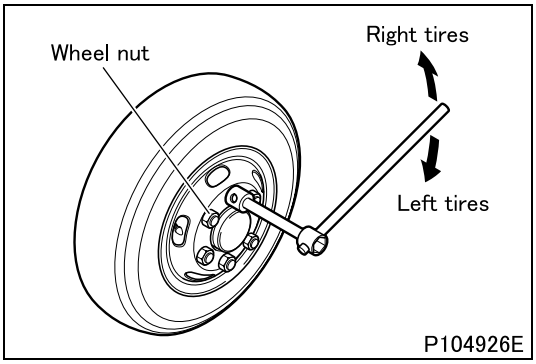

- Loosen wheel nuts slightly. The wheel nuts for right tires have right-hand threads “R”, and the wheel nuts for left tires have left-hand threads “L”.

WARNING ⚠

- **Make certain that wheel nut wrench is fully engaged, all the way to the back of nuts. If it is not, it could slip.**

CAUTION ⚠

- **Only loosen wheel nuts slightly. Do not remove them.**

- Jack up the vehicle carefully, until the tire is slightly off the ground.
  Remove wheel nuts, then remove the tire.
- When working on the double tires at the rear of the vehicle, first remove the outside tire, then lower the vehicle and loosen the nuts on the inside tire. After doing this, jack the vehicle back up and remove the tire.

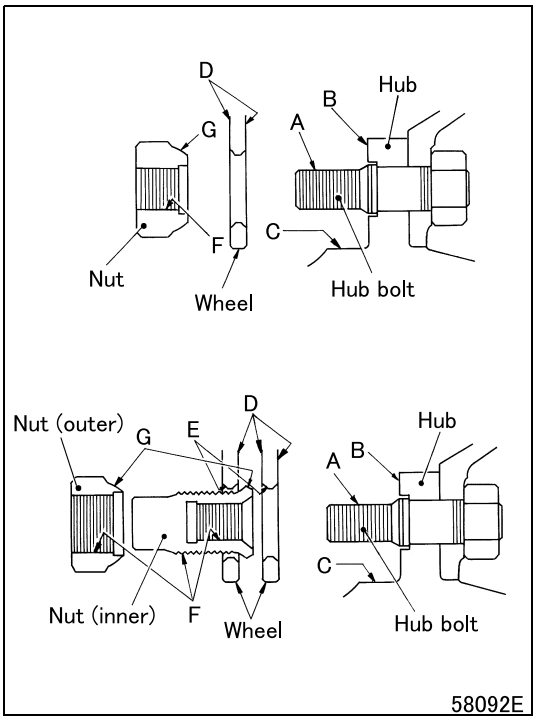

Mounting tires

To prevent wheel nuts and hub bolt from becoming loose and to prevent mounted parts (tire assemblies and hub) from being damaged, remove rust, dust, additional coatings of paint, and foreign particles from the following areas:

A: Hub bolt thread area
B: Wheel mounting surface of hub
C: Wheel alignment area of hub
D: Disc wheel mating surface
E: Disc wheel nut mounting surface
F: Wheel nut thread area
G: Wheel nut spherical area

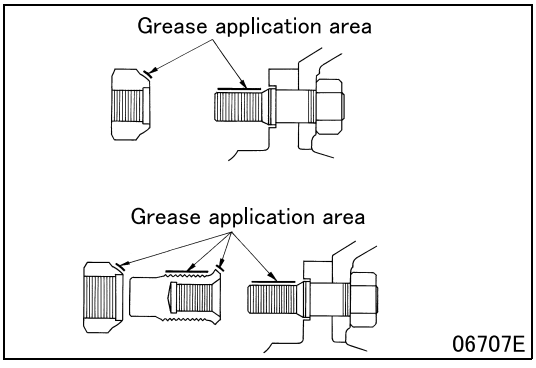

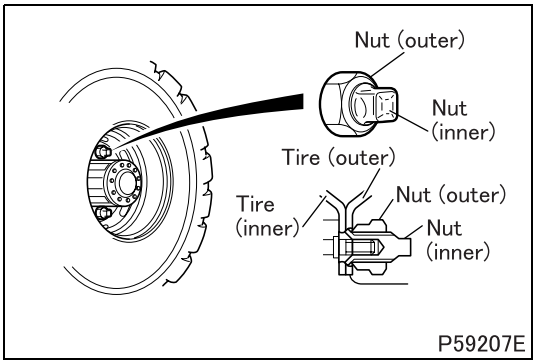

- Install the dual rear tires as follows:
  - After mounting inner tire and fully tightening inner wheel nuts, jack the vehicle up and mount on outer tire, then tighten outer wheel nuts.
  - Even if only outside tire is to be changed, do not mount it until inner wheel nuts have been fastened at the specified torque.
  - Slide the air valves on the inside and outside tires down when mounting the tires.

WARNING ⚠

- **If the threads are scored, or the disc wheel is deformed or cracked, change bolts, nuts and disc. Driving the truck before correcting such problems can cause the tire in question to come loose, which could be the source of major accidents.**

CAUTION ⚠

- **Check hub bolt threads carefully for damage before putting the tire on.**

- Place the tapered end of wheel nuts towards the disc wheel and fasten temporarily. Center so that there is no eccentricity between bolts and the disc wheel bolt holes.
- Lower the vehicle.

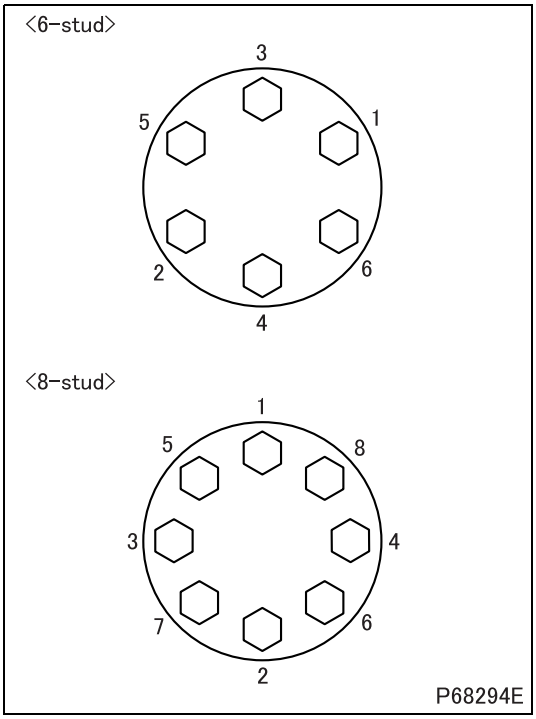

- Tighten the nuts in the order as illustrated, tightening each nut two or three times. To finish, tighten each nut at the specified torque.

WARNING ⚠

- **Always use the specified torque when tightening the wheel nuts. If the wheel nuts are not tightened properly, the wheels could come loose while the vehicle is being driven, which could result in life threatening accidents or the truck being disabled.**

CAUTION ⚠

- **Over-tightening the wheel nuts can damage them.**

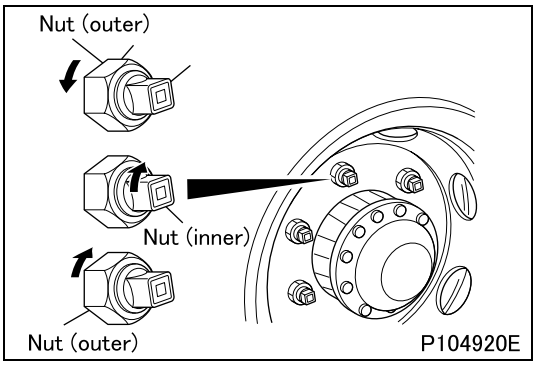

Checking the wheel nuts for looseness

The wheel nuts should be checked for looseness every 10,000 km (6,000 miles). All nuts should be tightened at the specified torque.

- Check the double rear tires for looseness as follows:

(1) Loosen outer wheel nuts.
(2) Tighten inner wheel nuts at specified torque.
(3) Tighten outer wheel nuts at specified torque.

CAUTION ⚠

If outer wheel nuts are tightened without first being loosened, it might not be possible to tighten them at the specified torque.

Tire rotation

Tires wear differently, according to the location where they are mounted. To make this wear uniform and prolong the life of your tires, they should be rotated every 10,000 km (6,000 miles) in the rotation order shown below:

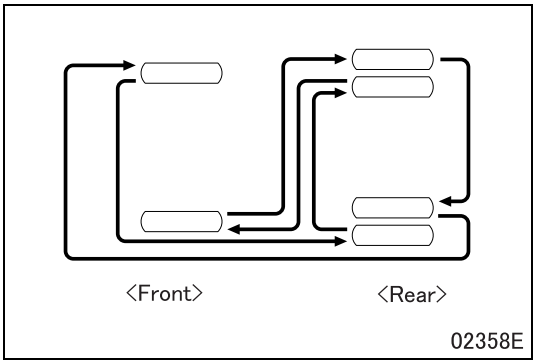

- When the tread patterns for all tires are identical:

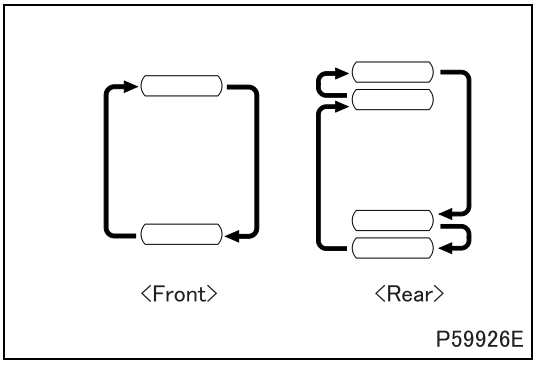

- When the tread patterns are different for the front and rear tires:

CAUTION ⚠

- **Always adjust air pressure after running-in new tires.**
- **When using tires of different tread patterns, use rib-type patterns for the front tires and traction type patterns for the rear tires.**
- **Avoid using both radial and biased tires on the same vehicle.**

M E M O

LUBRICATION TABLES

*1: 30,000 km/18,000 miles or 6 months, whichever occurs first
*2: 60,000 km/36,000 miles or 12 months, whichever occurs first
*3: FK61F
Ⓔ: Exhaust emission items

Items	Time of inspection and maintenance					Lubrication procedures	Reference Gr
			Inspection interval				
	Pre-operational checks	New vehicle at 4,000 km/ 2,500 miles	Every 10,000 km/ 6,000 miles	Every 30,000 km/ 18,000 miles *1	Every 60,000 km/ 36,000 miles *2		
Ⓔ Engine oil contamination and oil level	×					Engine oil API classification CJ-4 Over 30°C {86°F}.....SAE 40 Over –15°C {5°F}..... SAE 15W-40 Below 0°C {32°F}..... SAE 10W-30	Gr12
Ⓔ Engine oil replacement		×	×				
Clutch fluid tank fluid level	×		×			Brake fluid (SAE J1703f or FMVSS No. 116 DOT3)	Gr21
Clutch fluid tank fluid replacement					×		
Lubrication of clutch fork shaft				×		Wheel bearing grease [NLGI No. 2 (Li soap)] (Recommendation: Esso TEMPREX N3)	P01-18
Manual transmission oil level			×			Gear oil, API classification GL-3 SAE 80 (General) GL-3 SAE 90 (Warm region) GL-4 SAE 90 (Tropical region) Engine oil Long period of high-speed driving API classification CC or CC/SF SAE 30 or SAE 40	Gr22
Manual transmission oil replacement		×	Every 50,000 km/ 30,000 miles				
Automatic transmission fluid level			×			Automatic transmission fluid (DEXRON III)	Gr23
Automatic transmission fluid and filter replacement			All models except FM65F: Every 80,000 km/48,000 miles FM65F: Every 40,000 km/24,000 miles				
		Replace only filter (not lubrication filter but main filter for FM65F) at first 8,000 km/ 5,000 miles					
Axle housing gear oil level			×			Gear oil API classification GL-5 Below 40°C {104°F}.....SAE 90 Over 40°C {104°F}.... SAE 140 or SAE 85W-140 Use SAE 140 or SAE 85W-140 when operating vehicle under high load such as driving on continuous uphill roads and when the outside temperature is 10°C {50°F} or more	Gr27
Axle housing gear oil replacement		×			×		
Hub bearing grease and oil replacement					×	Wheel bearing grease [NLGI No. 2 (Li soap)]	Gr26, 27
Brake fluid tank fluid level *3	×		×			Brake fluid (SAE J1703 or FMVSS No. 116 DOT 3)	Gr35A
Brake fluid tank fluid replacement *3					×		
Power steering fluid level			×			Automatic transmission fluid (DEXRON II or DEXRON III type)	Gr37
Power steering fluid replacement					×		
Lubrication of propeller shaft (universal joint, slip joint, center bearing)			×			Wheel bearing grease [NLGI No. 2 (Li soap)]	P01-18
Lubrication of kingpins			×			Wheel bearing grease [NLGI No. 2 (Li soap)]	P01-18
Lubrication of all chassis parts			×			Chassis grease [NLGI No. 1 (Li soap)]	P01-18
Lubrication of cab rear mount cushion				×		Chassis grease [NLGI No. 1 (Li soap)]	Gr42

M E M O

Greasing Various Areas of Chassis

Carefully clean away all dust and dirt from the grease nipples, and use the specified type of grease. The areas to be greased are shown in the following illustration.

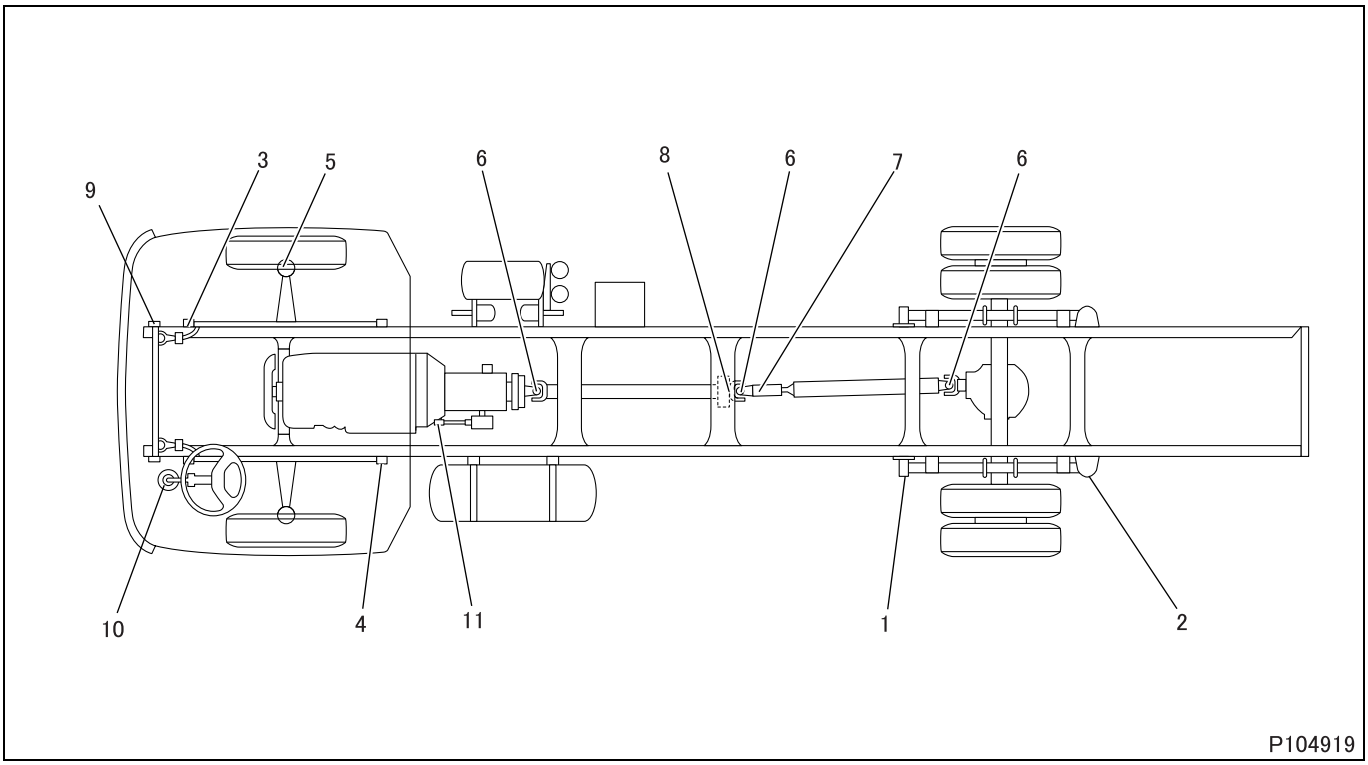

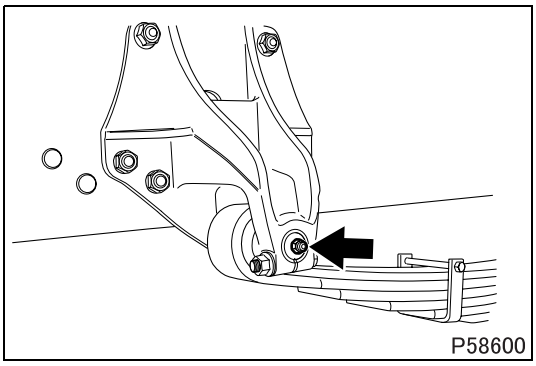

1. Rear spring pin front (left and right, 2 points)
   <Except air suspension>

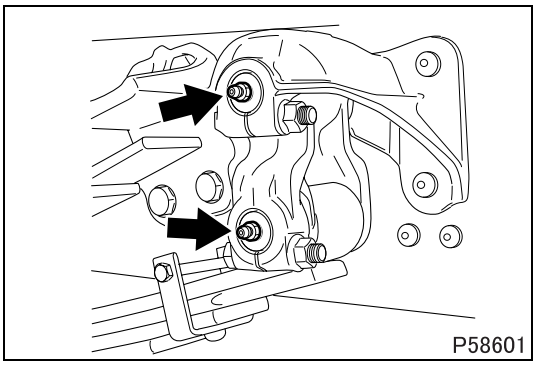

2. Rear spring pin rear (left and right, 4 points)
   <Except air suspension>

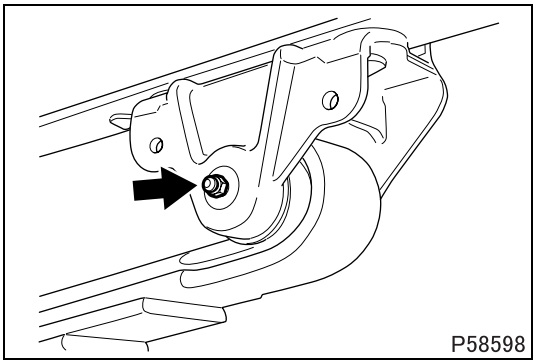

3. Front spring pin front (left and right, 2 points)

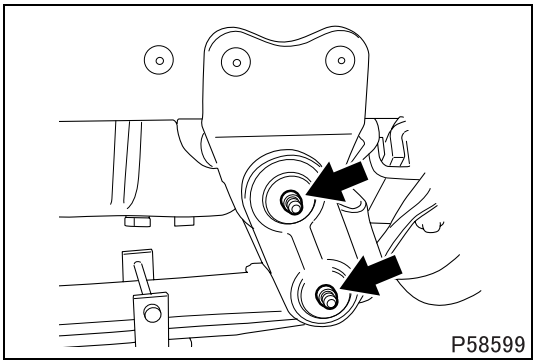

4. Front spring pin rear (left and right, 4 points)

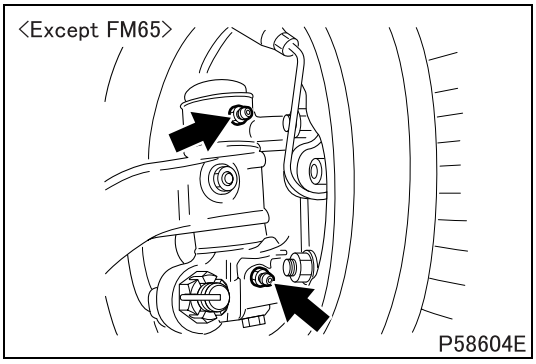

5. Kingpin bearing (left and right, 4 points <Except FM65>, 2 points <FM65>)

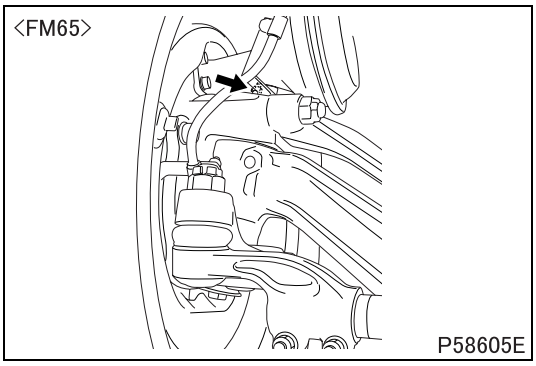

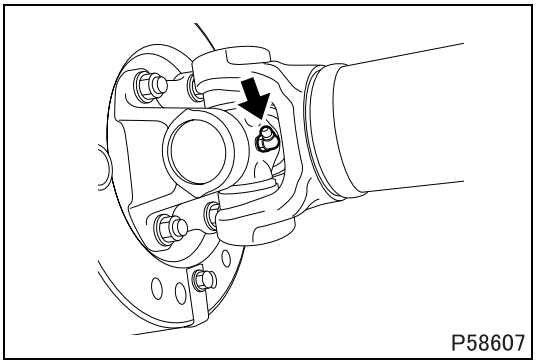

6. Propeller shaft universal joint

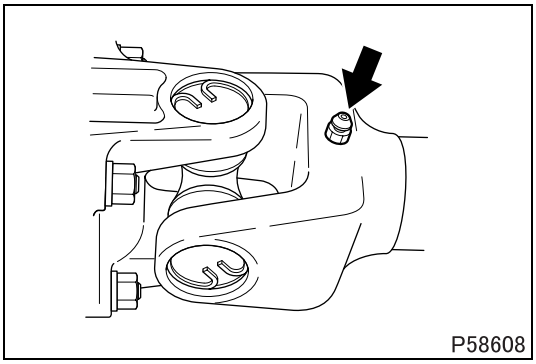

7. Propeller shaft slip joint

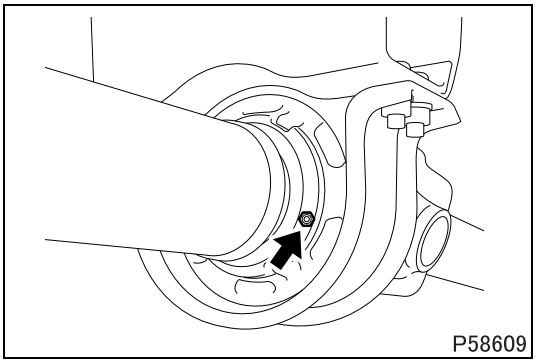

8. Propeller shaft center bearing

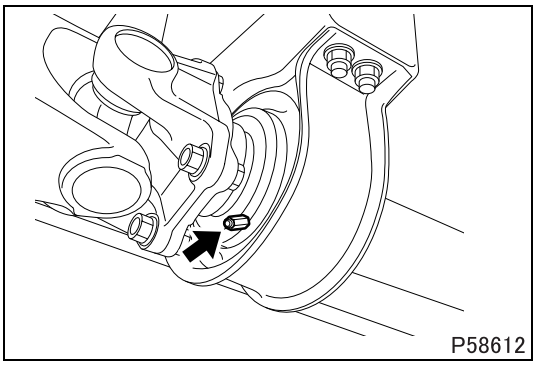

Supply grease to the center bearing until grease overflows from the relief valve at the back of the grease nipple.

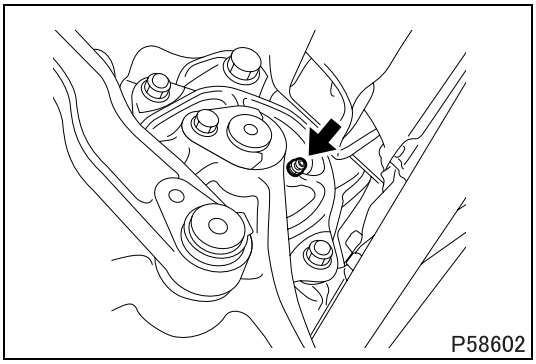

9. Cab hinge (left and right, 2 points)

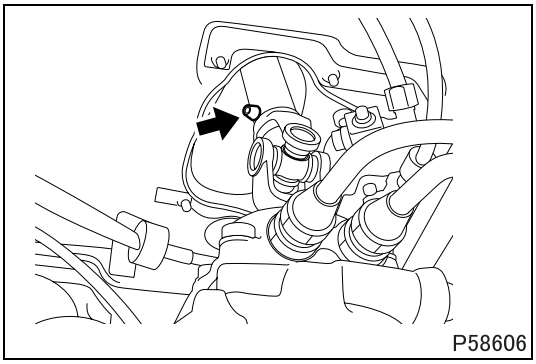

10. Steering shaft

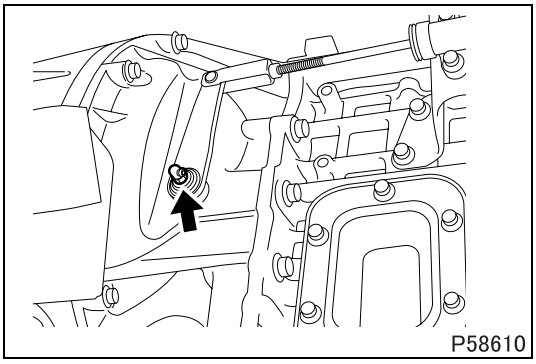

11. Clutch fork shaft (left and right, 2 points)

Group 11

Engine

Table of Contents

Back

Home

MITSUBISHI FUSO TRUCK OF AMERICA, Inc.

Pub.No.TWME0806-11

INDEX

SPECIFICATIONS 11-2

STRUCTURE AND OPERATION
1. Engine Proper 11-3
2. Rocker and Bracket Assembly, Camshaft, Rocker Case and Cylinder Head Gasket 11-4
3. Valve Mechanism 11-5
4. Connecting Rod 11-5
5. Piston 11-6
6. Timing Gears 11-6
7. Flywheel 11-8

TROUBLESHOOTING 11-9

ON-VEHICLE INSPECTION AND ADJUSTMENT
1. Measuring Compression Pressure 11-10
2. Inspection and Adjustment of Valve Clearances 11-14

ENGINE REMOVAL AND INSTALLATION 11-18

ROCKER COVER, ROCKER AND BRACKET, CAMSHAFT 11-20

CYLINDER HEAD AND VALVE MECHANISM 11-30

PISTON AND CONNECTING ROD, CYLINDER LINER 11-50

FLYWHEEL
<MANUAL TRANSMISSION> 11-64
<AUTOMATIC TRANSMISSION> 11-72

TIMING GEARS 11-76

CRANKSHAFT AND CRANKCASE 11-82

SPECIFICATIONS

Item		Specifications
Engine mode		6M60T1
Type		6-cylinder, in-line, water-cooled, 4-cycle diesel engine
Combustion chamber		Direct injection type
Valve mechanism		Overhead camshaft (OHC) system
Maximum output	HP/rpm	243/2600
Maximum torque	ft.lbs/rpm	516/1400
Bore × stroke	mm {in.}	ϕ118 × 115 {ϕ4.65 × 4.53}
Total displacement	cm^3 {cu.in.}	7545 {460}
Compression ratio		17.5

1. Engine Proper

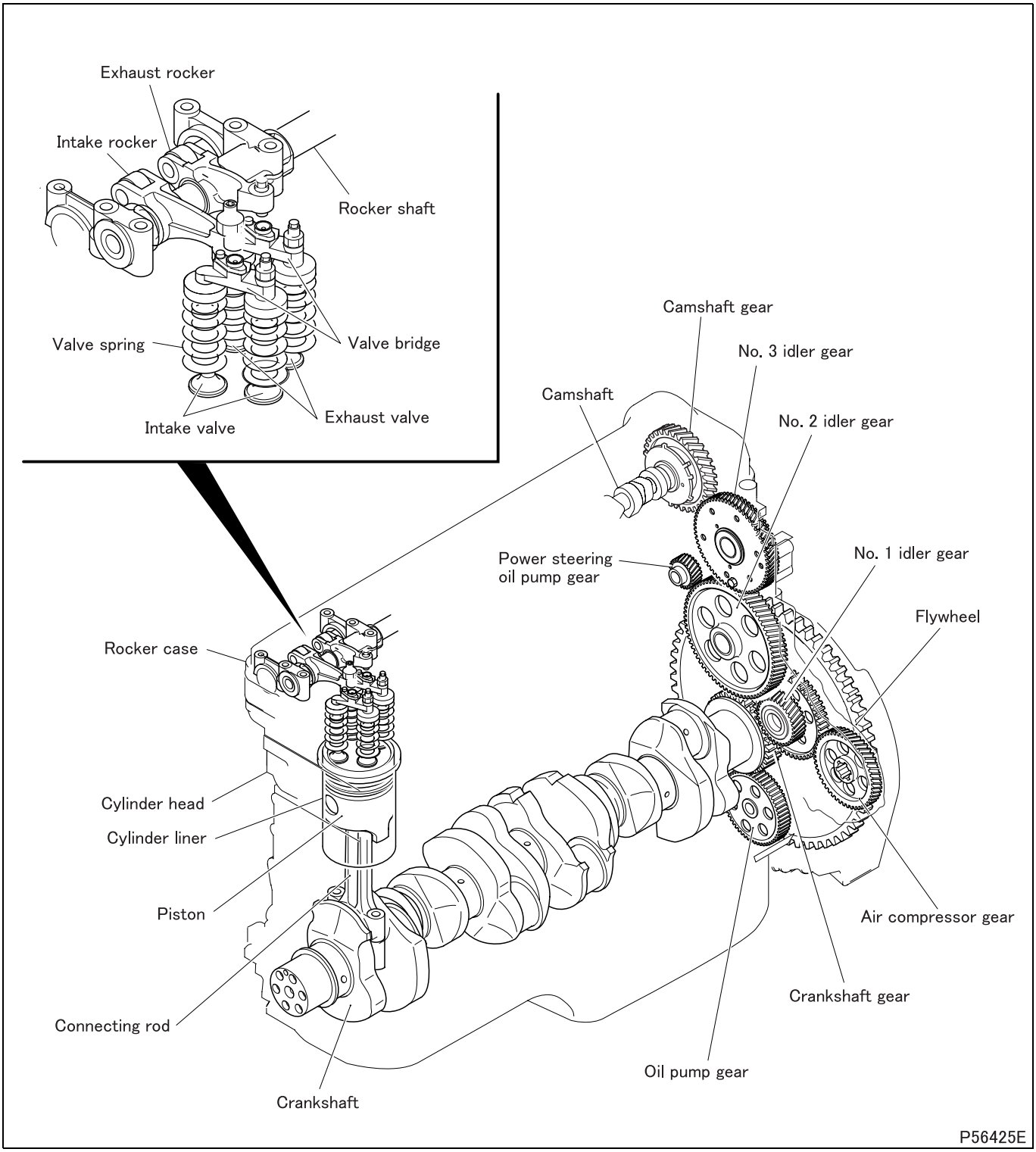

- The 6M6 engine employs an overhead camshaft (OHC) system, with the valve mechanism and the timing gears arranged as shown above.

2. Rocker and Bracket Assembly, Camshaft, Rocker Case and Cylinder Head Gasket

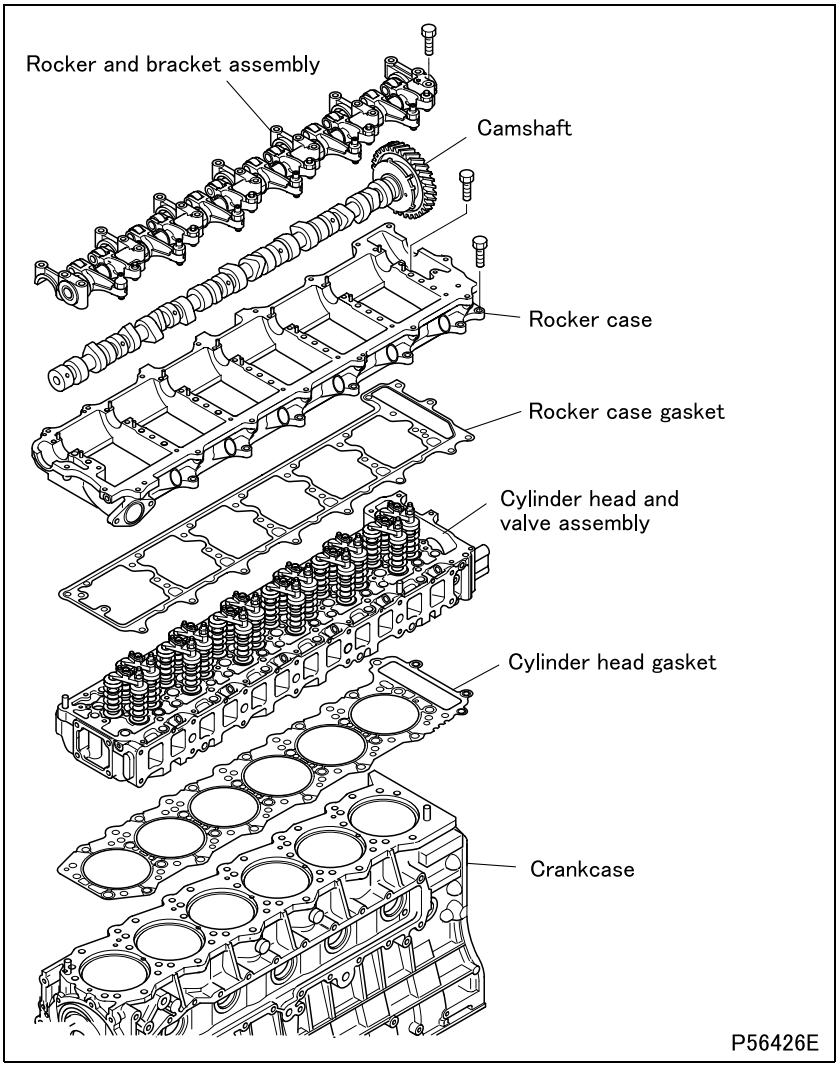

- The camshaft is directly supported at its journals by the rocker case, and is held in place from above by the rocker and bracket assembly.
- The camshaft journals are directly supported by the rocker case and the rocker and bracket assembly, without using any camshaft bearings. The rocker case and brackets have been machined together, meaning that they all need to be replaced for a new set when one of them becomes defective.

3. Valve Mechanism

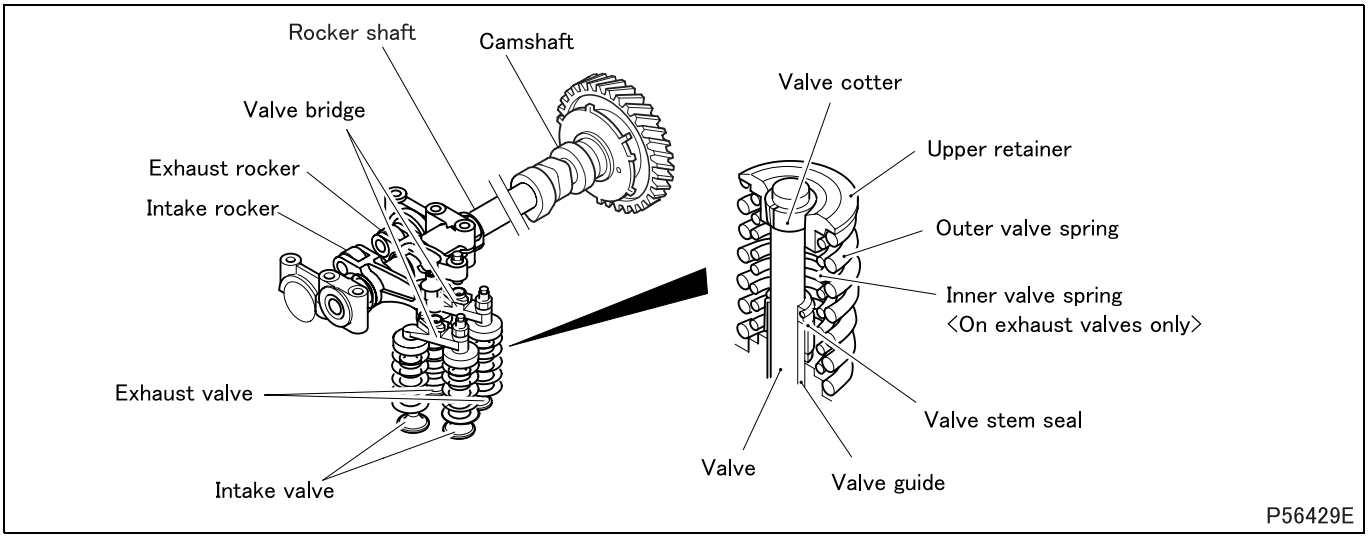

- Each valve has a valve stem seal, which regulates the flow of lubricating oil to the contact surface between the valve and the valve guide.
- The valve springs have a variable pitch to prevent abnormal vibration at high engine speed. The exhaust valves use a double spring, with the inner and outer springs coiled in different directions to prevent them from jamming each other.

4. Connecting Rod

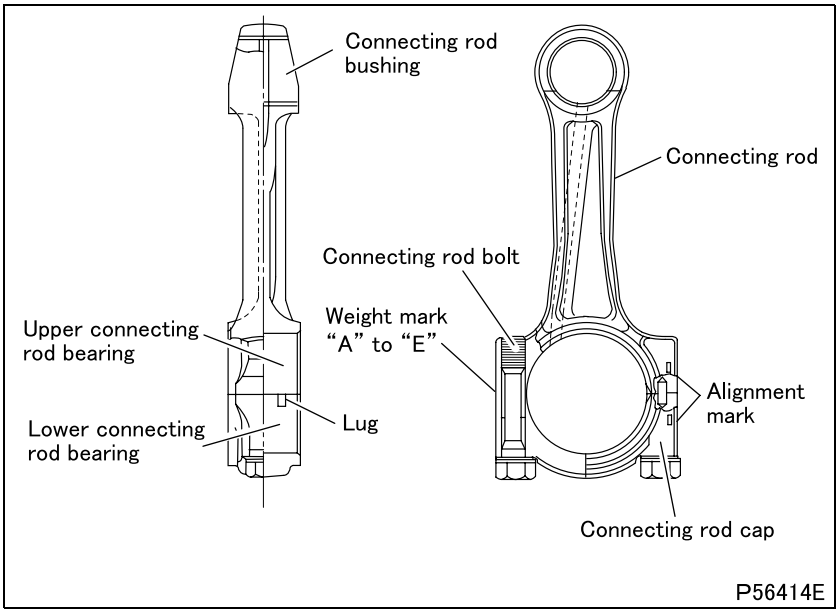

- Weight mark: "A" to "E"
- "E" indicates the greatest connecting rod mass.

5. Piston

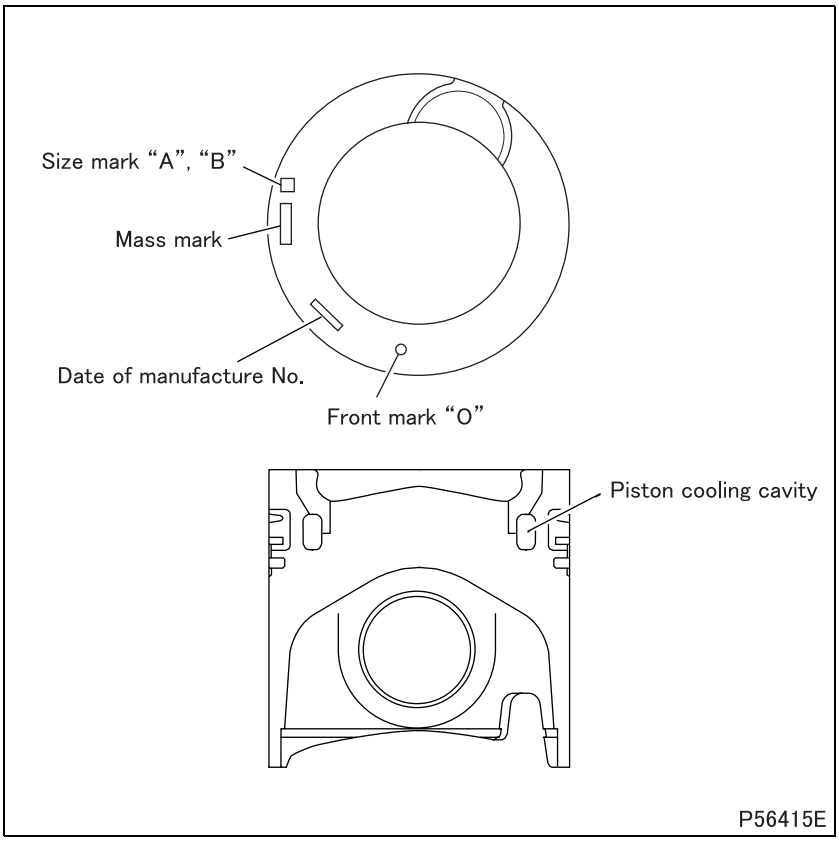

- The piston, the cylinder liner and the crankcase bore all must have the same size marks to ensure a good fit between them.
- The pistons are made of special aluminum alloy, and are provided with a recess on each end of the piston pin boss to reduce weight.

6. Timing Gears

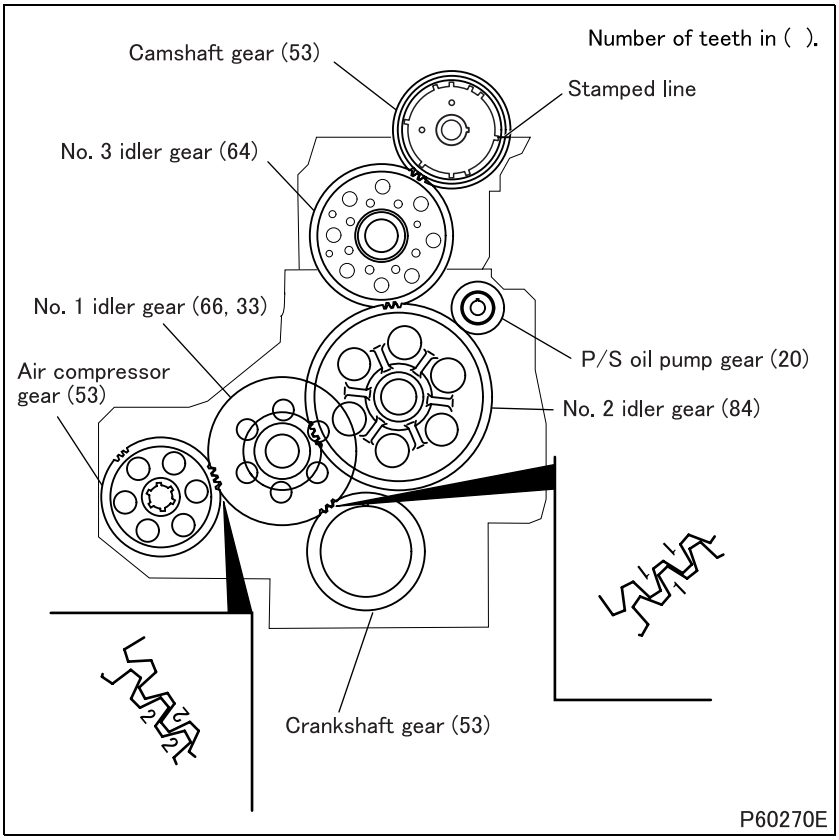

- The timing gears are provided with timing marks to help ensure correct assembly.
- Timing marks are provided on the following gears.
  - Camshaft gear: stamped line
  - Crankshaft gear: "1"
  - Air compressor gear: "2"
  - No. 1 idler gear: "1", "2"

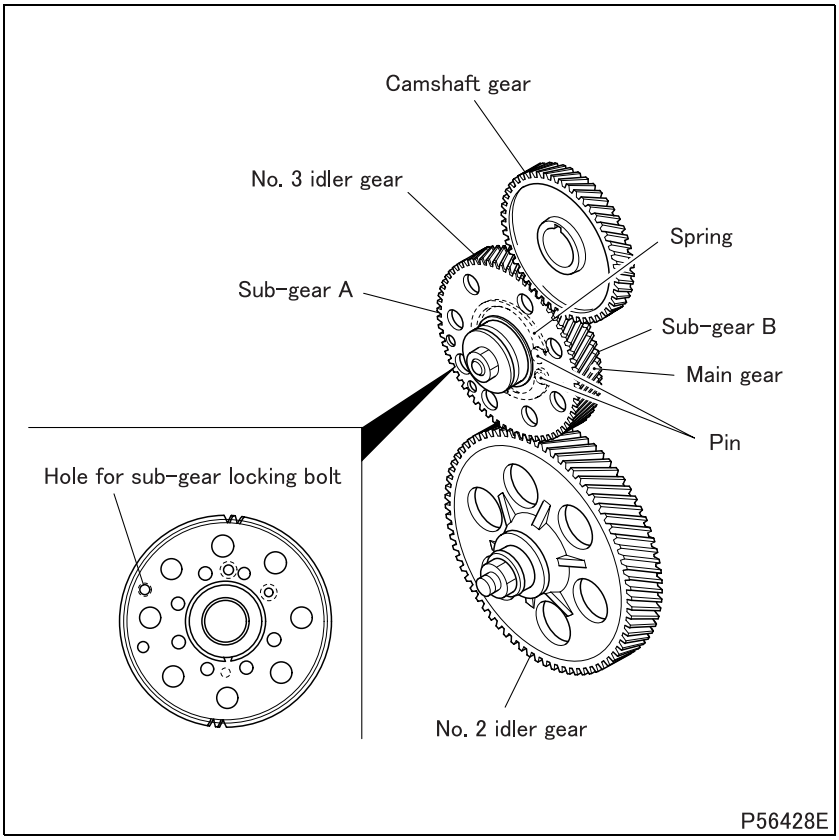

6.1 No. 3 idler gear

- The No. 3 idler gear consists of the sub-gear A, the sub-gear B and the main gear.
- A spring is installed between the sub-gear A and the main gear, as well as between the sub-gear B and the main gear. The springs are locked in place with pins.
- The sub-gears are installed as follows. The sub-gear A has been turned in such a way as to compress the spring before meshing with the camshaft gear. Likewise, the sub-gear B has been turned to compress the spring before meshing with the No. 2 idler gear.

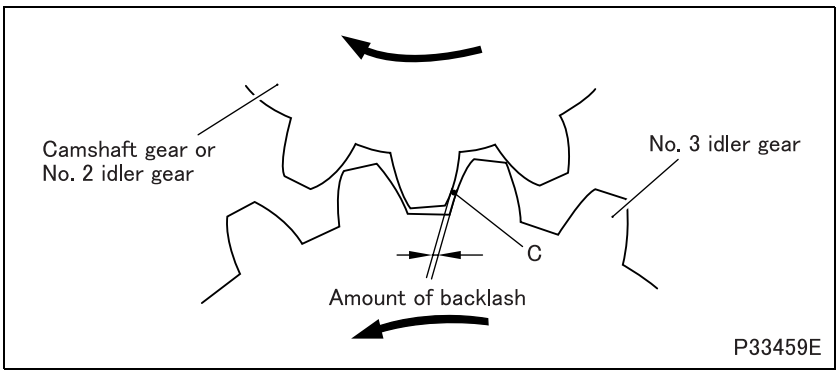

(1) Non-backlash mechanism

- Engine hunting during idling causes fluctuation in the speed of camshaft and No. 2 idler gears.
- Without the non-backlash mechanism, the backlash at C changes between zero and the maximum, generating gear rattle noise.

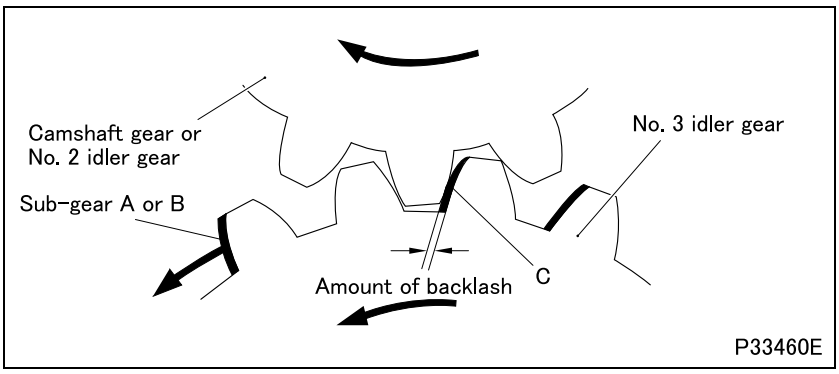

- With the non-backlash mechanism equipped on the engine, the sub-gears A and B maintain the backlash at C to zero even when the engine hunts, eliminating gear rattle during idling.

7. Flywheel

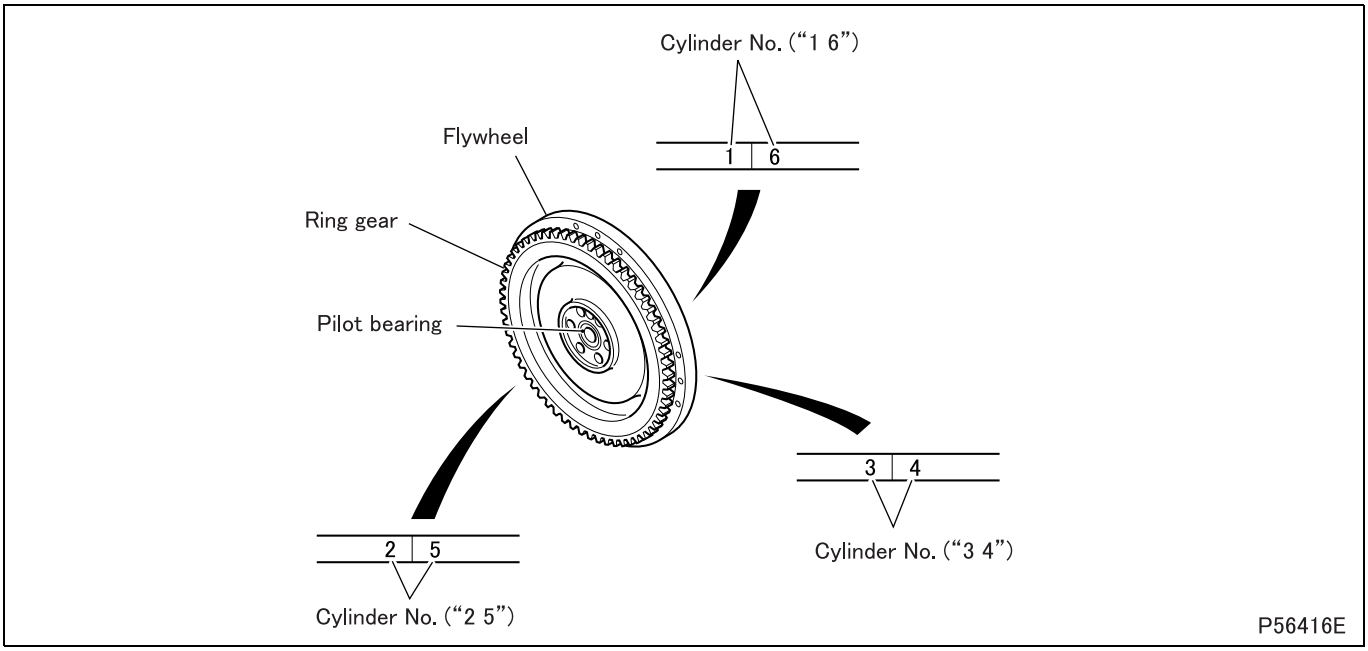

- One side of each flywheel ring gear tooth is chamfered to facilitate the engagement of the starter pinion.

Possible causes \ Symptoms		Low power output	Abnormal engine noise	Reference Gr
Cylinder head and valve mechanism	Incorrect valve clearance	O	O	
	Defective cylinder head gasket	O	O	
	Worn valve and valve seat; carbon deposits	O	O	
	Weakened valve spring	O	O	
	Defective rocker shaft and bracket		O	
	Poor lubrication of rocker shaft bracket		O	
Timing gears	Incorrect backlash in timing gears		O	
	Poor lubrication of timing gears and idler shaft		O	
Camshaft	Excessive end play in camshaft		O	
	Worn camshaft		O	
Pistons and connecting rods	Worn/damaged piston ring groove(s)	O	O	
	Worn/damaged piston ring(s)	O	O	
	Worn piston pin and connecting rod small end		O	
Crankshaft	Excessive end play in crankshaft		O	
	Incorrectly fitted crankshaft pulley		O	
	Worn/damaged crankshaft pins and connecting rod bearings		O	
	Worn/damaged crankshaft journals and main bearings		O	
Fuel system	Supply pump faulty	O	O	Gr13EA
	Defective injector	O	O	
	Air trapped in fuel system	O		Gr13A
Cooling system	Malfunctioning cooling system components	O		Gr14
	Loose/damaged belts		O	
Intake and exhaust system	Clogged air cleaner	O	O	Gr15
	Clogged muffler	O	O	
	Malfunctioning turbochargers	O	O	
Incorrect oil viscosity		O		Gr12
Improper fuel		O		
Incorrectly fitted piping and hoses			O	
Defective/incorrectly fitted alternator and other auxiliaries			O	

ON-VEHICLE INSPECTION AND ADJUSTMENT

1. Measuring Compression Pressure

Service standards

Location	Maintenance item		Standard value	Limit	Remedy
–	Compression pressure	Each cylinder (at 200 rpm)	2,940 kPa {426 psi, 30 kgf/cm^2}	1,960 kPa {284 psi, 20 kgf/cm^2}	Inspect
		Cylinder-to-cylinder pressure difference	–	390 kPa {57 psi, 4 kgf/cm^2} or less	Inspect

Special tools (Unit: mm)

Mark	Tool name and shape	Part No.	Application
a	Compression gauge adapter A: 16 W × 18 threads 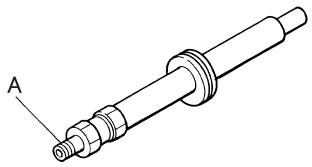 13660	MH063384	Measuring compression pressure
b	Nozzle extractor A: M18 × 1.25 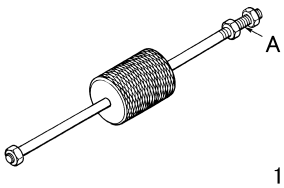 13523	MH061071	Removal of injector
c	Injector extractor adaptor 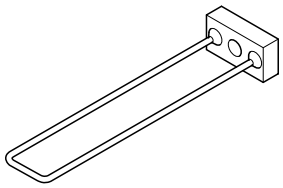 P36242	MH062560	Removal of injector (used with MH061071)

- A drop in compression pressure can be used as a guide to determine when the engine should be overhauled.
- Measure the compression pressure at regular intervals. Keeping track of its transitions can provide a useful tool for troubleshooting. On new vehicles and vehicles with newly replaced parts, the compression pressure will be somewhat higher depending on the break-in condition of piston rings, valve seats, etc., but this will return to normal as the parts wear down.
- Before the compression measurement, confirm that the engine oil, starter, and battery are in normal condition.
- Place the vehicle in the following conditions.
  - Warm up the engine until the coolant temperature reaches approximately 75 to 85°C {167 to 185°F}.
  - Turn off the lights and auxiliaries.
  - Place the transmission in neutral. (Place the automatic transmission in P range.)
  - Place the steering wheel in the straight-ahead position.

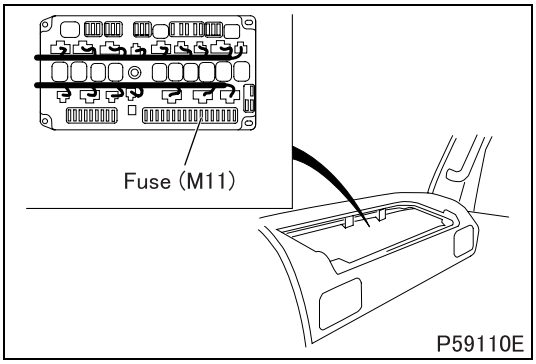

- Remove the fuse (M11) from the relay and fuse box in the cab to prevent fuel from being injected while the engine is cranked using the starter.

CAUTION ⚠

- **When cranking the engine, never shut off the power to the engine electronic control unit by disconnecting the engine electronic control unit connector or the like.**
- **If the engine is cranked while shutting off the power to the engine electronic control unit, the electronic control unit cannot control the supply pump and this may cause failure to the pump.**

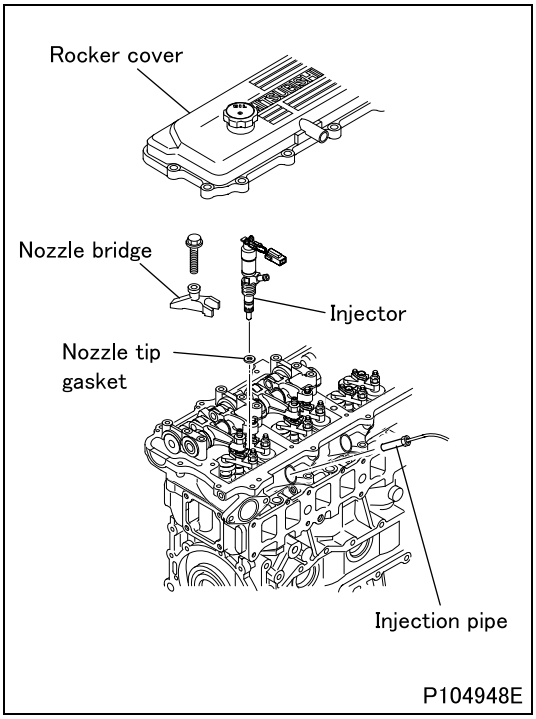

- Remove all the injectors.

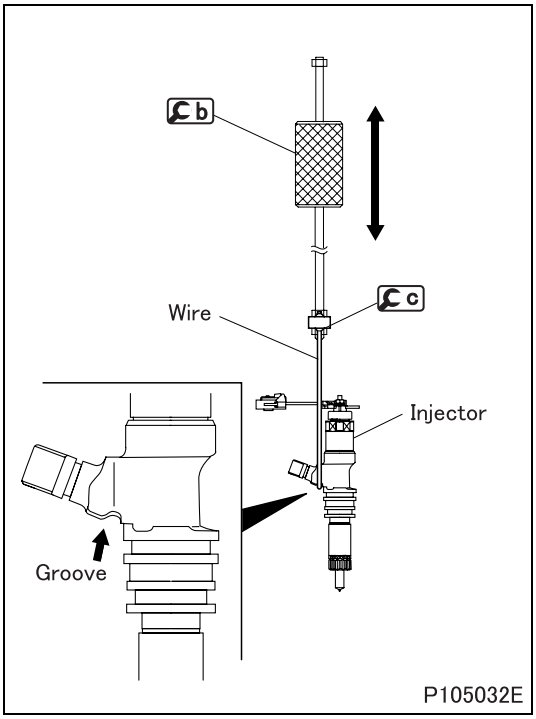

- Remove the injector using b and c, with the wire of c engaged in the groove on the injector.

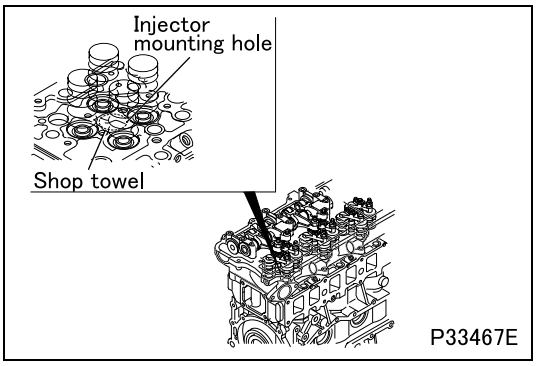

- Cover the injector mounting holes with shop towels or other similar cloth. Crank the engine using the starter. Ensure that no foreign matter is attached on the shop towels.

WARNING ⚠

- **If cracks or any other damage are evident in the cylinders, this means that the coolant, engine oil or fuel, or other substances, has entered the cylinders. If this is the case, it is extremely dangerous to crank the engine as these substances will gush out at high temperature from the injector mounting holes. Stay away from the engine when cranking it.**

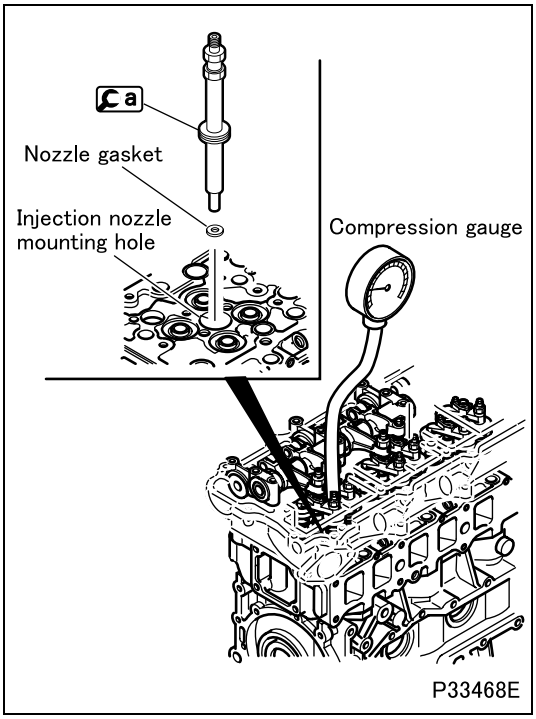

- Attach the nozzle gasket and a to one of the injection nozzle mounting holes. Then, connect a compression gauge to a.
- Crank the engine and measure the compression pressure.
- Measure the compression pressure for all the cylinders one after another. Determine the compression pressure difference between the cylinders.
- If the compression pressure is below the limit or the cylinder-to-cylinder pressure differences is not within the limit, pour a small amount of engine oil into the corresponding injection nozzle mounting hole and remeasure the compression pressure.
  - If the compression pressure increases, the piston rings and cylinder surfaces may be badly worn or otherwise damaged.
  - If the compression pressure remains unchanged, there may be seizure in the valves, the valves may be incorrectly seated or the cylinder head gasket may be defective.

- After the measurement and before installing the rocker cover, reapply sealant to the packing (half-round) between the rocker case upper and rocker case. (See ROCKER COVER, ROCKER AND BRACKET, CAMSHAFT.)

2. Inspection and Adjustment of Valve Clearances

Service standards (Unit: mm {in.})

Location	Maintenance item	Standard value	Limit	Remedy
–	Valve clearance (when cold)	0.6 {0.024}	–	Adjust

Tightening torque (Unit: N·m {ft.lbs, kgf·m})

Mark	Parts to be tightened	Tightening torque	Remarks
–	Lock nut (adjusting screw tightening)	59 {44, 6.0}	–
–	Lock nut (rocker arm adjusting screw tightening)	34 {25, 3.5}	–

Special tools

Mark	Tool name and shape	Part No.	Application
a	Socket wrench 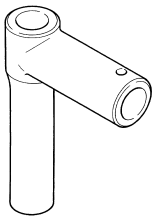 14437	MH063003	Tightening the lock nut

- Valve clearances should be checked and adjusted as follows while the engine is still cold.

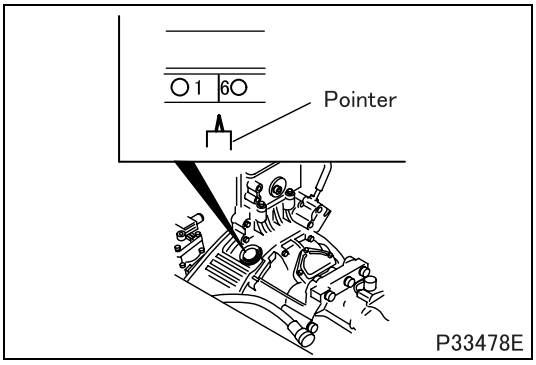

[Inspection]

- Remove the rocker cover.
- Bring the No. 1 or No. 6 cylinder piston to the top dead center (TDC) on the compression stroke according to the following procedure:
  - Rotate the crankshaft until the pointer is aligned with the “1 6” mark on the flywheel.
  - This will place either the No. 1 or No. 6 cylinder piston at TDC on the compression stroke. The cylinder in which the rocker arms for both the intake and exhaust valves can be pushed down by hand by the valve clearance amounts has its piston at TDC. Rotate the engine by one full turn to switch the TDCs of the No. 1 and No. 6 cylinder pistons.

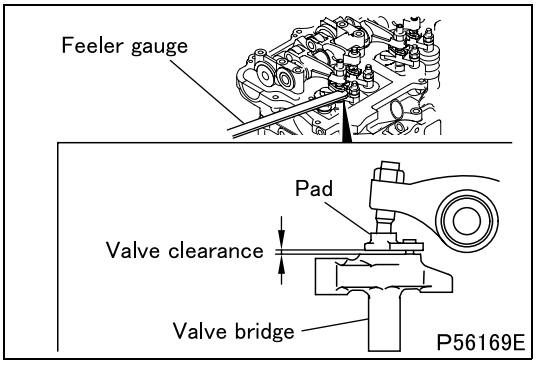

- With the No. 1 or No. 6 cylinder piston at TDC, measure the clearance of the valves (clearance between valve bridge and pad) marked with a circle in the table below.

Cylinder No.	1		2		3		4		5		6	
Valve	IN	EX	IN	EX	IN	EX	IN	EX	IN	EX	IN	EX
No. 1 cylinder piston at TDC on compression stroke	O	O	O	–	–	O	O	–	–	O	–	–
No. 6 cylinder piston at TDC on compression stroke	–	–	–	O	O	–	–	O	O	–	O	O

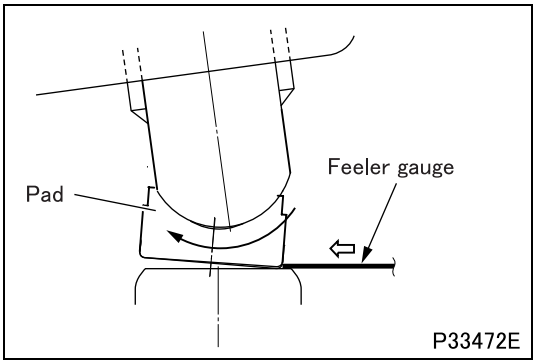

- Any attempt to insert a feeler gauge without first securing sufficient space, as described above, between the pad and the valve bridge will fail, as the pad will tilt as shown in the illustration, thus blocking the entry of a feeler gauge.

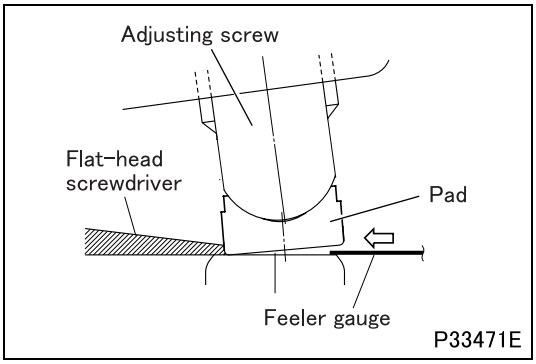

- Before inserting a feeler gauge, push the adjusting screw pad on the side opposite from where a feeler gauge is to be inserted, as shown in the illustration, using a flat-head screwdriver or other similar tool. This will create space necessary for the gauge to be inserted.
- The measurement is correct when the feeler gauge feels slightly resisted as it is inserted.
- The measurement is not yet correct if the feeler gauge can still be inserted smoothly.
- If the measurement deviates from the standard value, adjust as follows.

[Adjustment]

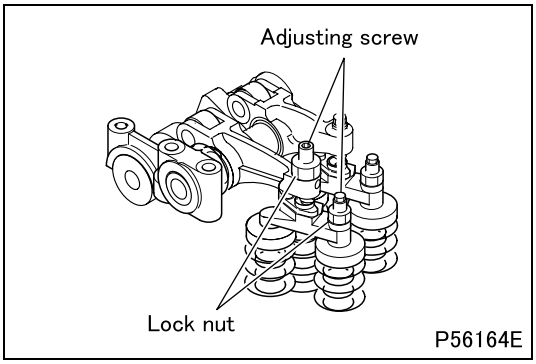

- Loosen the lock nuts and adjusting screws on the valve bridge and rocker arm.

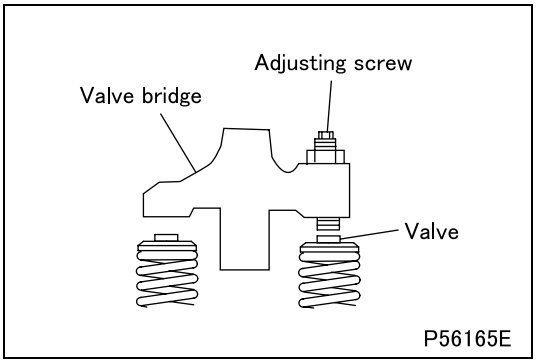

- While holding the valve bridge by hand, screw in the adjusting screw until it lightly contacts the valve stem end.
- Then, further screw in the adjusting screw by 45°.

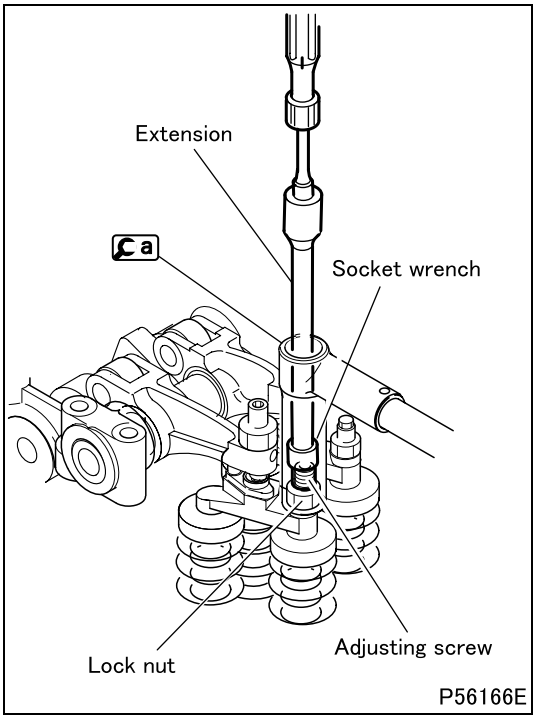

- While holding the adjusting screw in this position with a socket wrench and extension, tighten the lock nut to the specified torque using a.

CAUTION ⚠

- **After adjusting the adjusting screw, be sure to tighten the lock nut to the specified torque. Insufficient torquing will compromise the parallelism of the valve bridge, damaging the valve mechanism.**

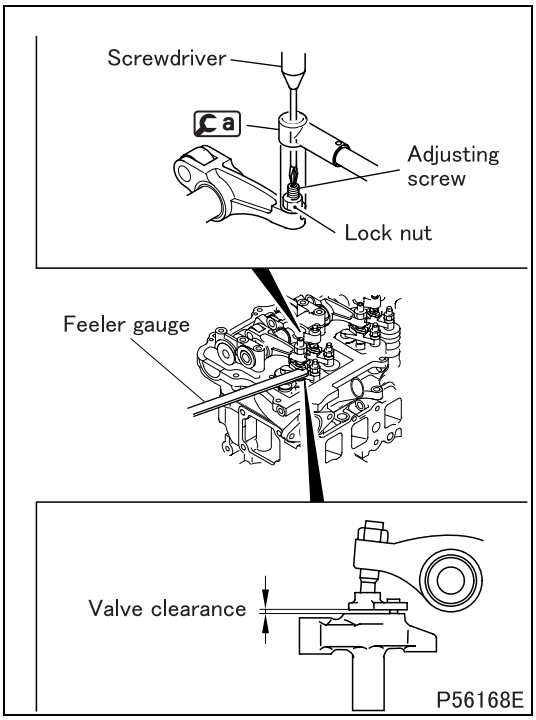

- Screw in or out the adjusting screw on the rocker arm until the correct feeler gauge can be inserted with a slight resistance.
- While holding the adjusting screw in this position with a screwdriver, tighten the lock nut to the specified torque using a.
- Recheck the valve clearance using the correct feeler gauge.

[Installation]

- Before installing the rocker cover, reapply sealant to the packing (half-round) between the rocker case upper and rocker case. (See ROCKER COVER, ROCKER AND BRACKET, CAMSHAFT.)

M E M O

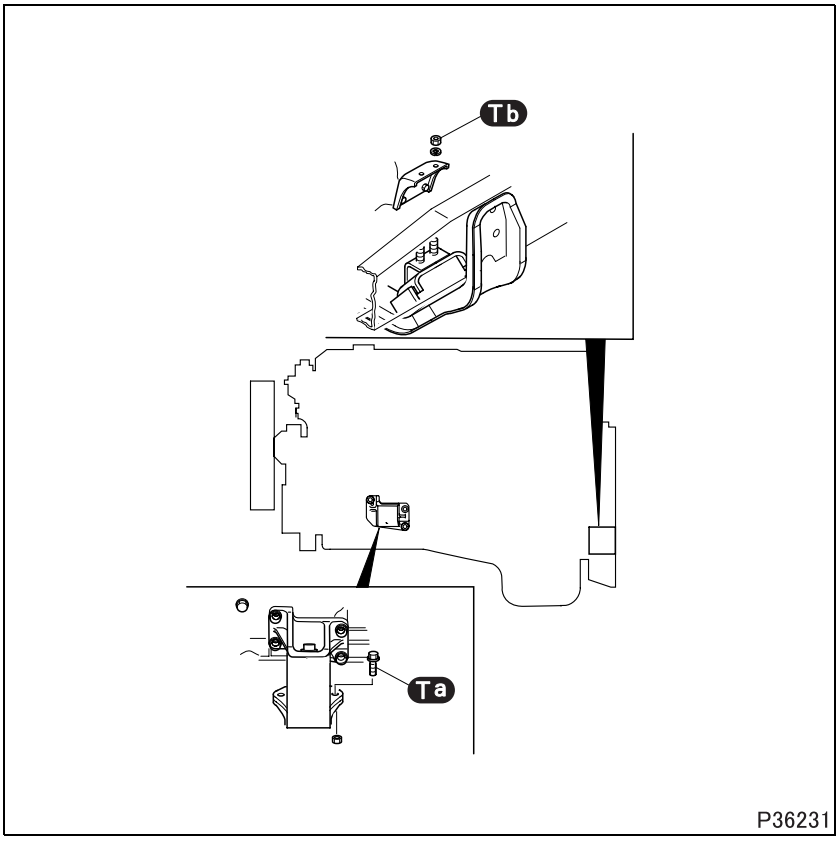

Tightening torque (Unit: N·m {ft.lbs, kgf·m})

Mark	Parts to be tightened	Tightening torque	Remarks
Ta	Bolt (front engine mounting installation)	50 to 65 {37 to 48, 5.0 to 6.5}	–
Tb	Nut (rear engine mounting installation)	60 to 85 {44 to 63, 6.0 to 8.5}	–

Special tools

Mark	Tool name and shape	Part No.	Application
Ca	Front hanger 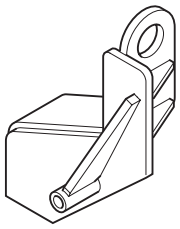 P59850	ME303276	Removal and installation of engine
Cb	Rear hanger 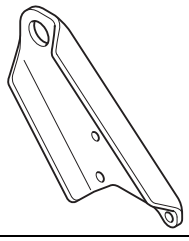 P59851	ME303283	Removal and installation of engine

◆Work before removal◆

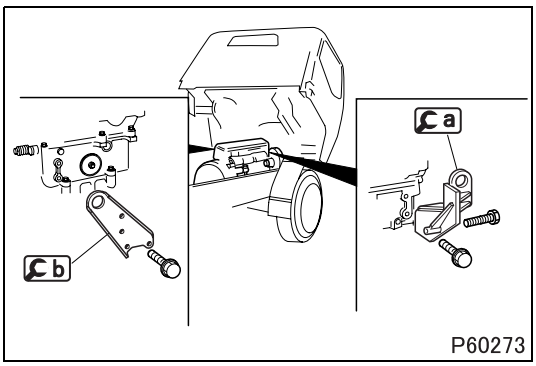

■ **Preparation: Installation of engine hangers**

- Install a onto the cylinder head and exhaust manifold using three flange bolts (2 × 22 mm-long M10 × 1.5 mm bolts and 1 × 76 mm-long M10 × 1.5 mm bolt). Tighten the bolts to a torque of 76 N·m {55 ft.lbs, 7.7 kgf·m}.
- Install b onto the cylinder head and flywheel housing using four flange bolts (22 mm-long M10 × 1.5 mm). Tighten the bolts to a torque of 76 N·m {55 ft.lbs, 7.7 kgf·m}.

◆Removal procedure◆

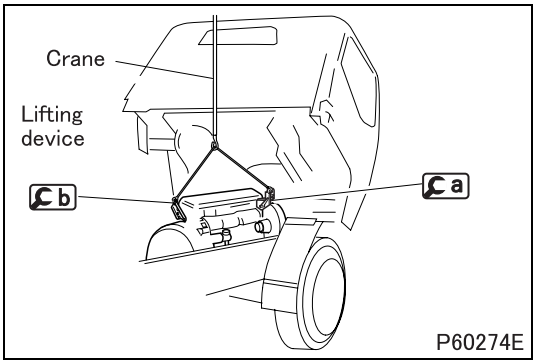

■ **Removal: Engine and transmission**

- Hook a lifting device onto a and b, and lift the device with a crane until it is taut.

WARNING ⚠

- Use a lifting device that can comfortably withstand the mass of the engine (approx. 700 kg {1540 lb.}).

- Ensure that the harnesses, piping and other relevant parts have been disconnected.

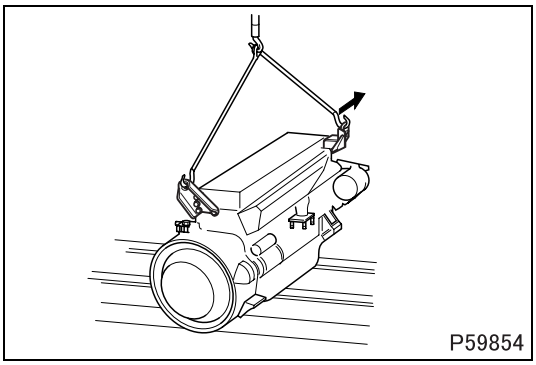

- Remove the bolts and nuts from the engine mounts. Slowly lift the engine, taking care not to hit the engine against the frame or cab.
- Once the bottom of the engine is out of the frame, turn the engine by 90° and remove it out of the vehicle.

◆Installation procedure◆

■ **Installation: Engine and transmission**

- Follow the removal sequence in reverse.
  (See "■ **Removal: Engine and transmission**".)

ROCKER COVER, ROCKER AND BRACKET, CAMSHAFT

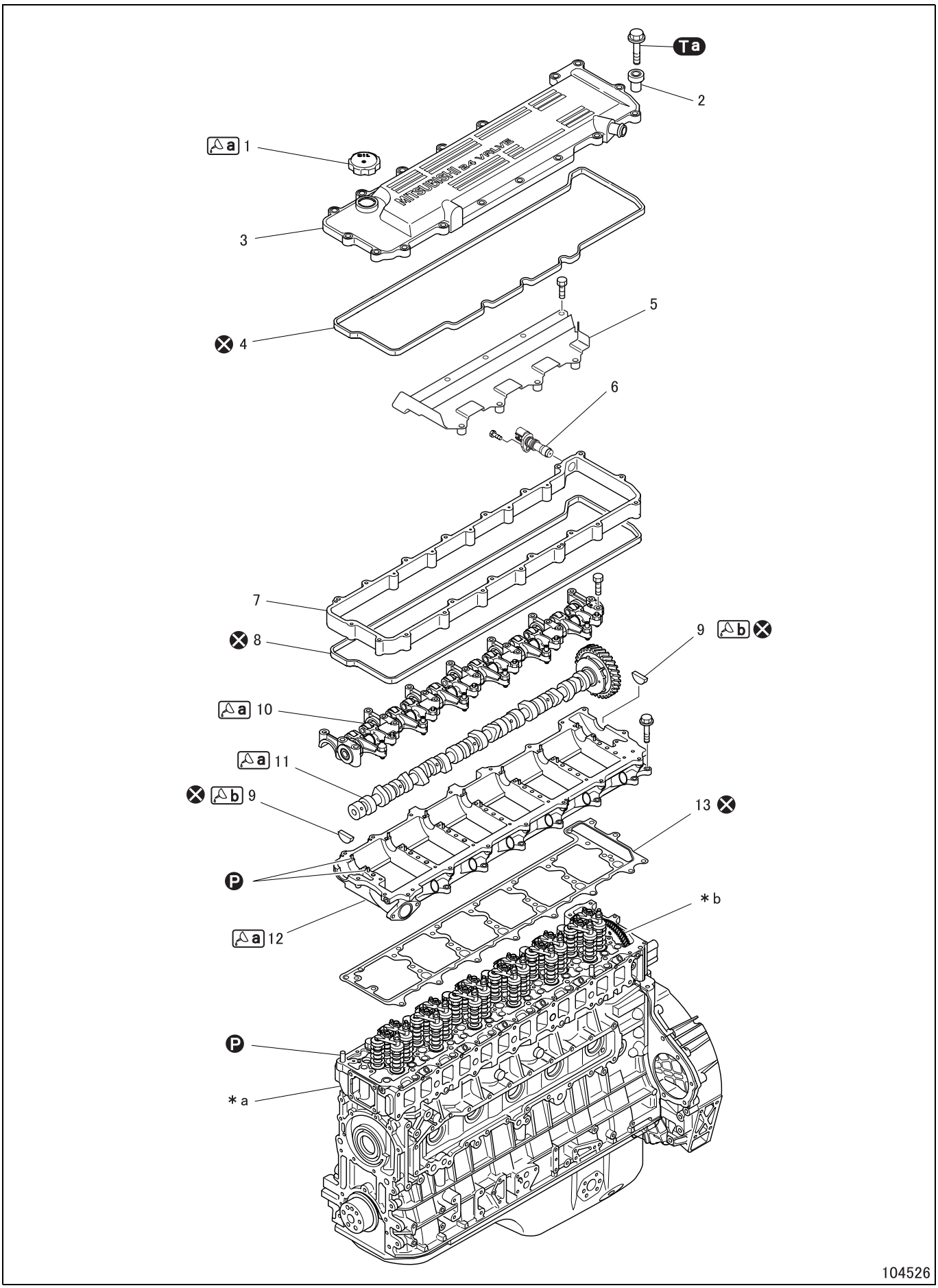

● **Disassembly sequence**

1 Oil filler cap
2 Rubber
3 Rocker cover
4 Rocker cover gasket
5 Baffle plate
6 Cylinder recognition sensor
7 Rocker case upper
8 Rocker case upper gasket
9 Packing
10 Rocker and bracket assembly (See later section.)
11 Camshaft (See later section.)
12 Rocker case
13 Rocker case gasket

Ⓟ: Locating pin
⊗: Non-reusable parts
***a**: Cylinder head
***b**: No. 3 idler gear

CAUTION ⚠

- **The rocker case and the brackets of the rocker and bracket assembly have been machined together, which means that they all must be replaced together. Never swap the locations of the brackets, either.**

● **Assembly sequence**

Follow the disassembly sequence in reverse.

NOTE

- **Tighten the rocker case mounting bolts diagonally from the center towards the ends.**

Service standards (Unit: mm {in.})

Location	Maintenance item	Standard value	Limit	Remedy
–	Camshaft end play	0.05 to 0.20 {0.0020 to 0.0079}	0.4 {0.016}	Inspect
11, *b	Backlash between camshaft gear and No. 3 idler gear	0.18 to 0.26 {0.0071 to 0.010}	0.35 {0.014}	Replace

Tightening torque (Unit: N·m {ft.lbs, kgf·m})

Mark	Parts to be tightened	Tightening torque	Remarks
Ta	Bolt (rocker cover mounting)	9 {6.5, 0.9}	–

Lubricant and/or sealant

Mark	Points of application	Specified lubricant and/or sealant	Quantity
a	Rubber portion of oil filler cap	Engine oil	As required
	Camshaft journal supports on rocker and bracket assembly		
	Camshaft journals and cams		
	Camshaft journal supports on rocker case		
b	Periphery and top surface of packing	ThreeBond 1217H	As required

◆**Work before removal**◆

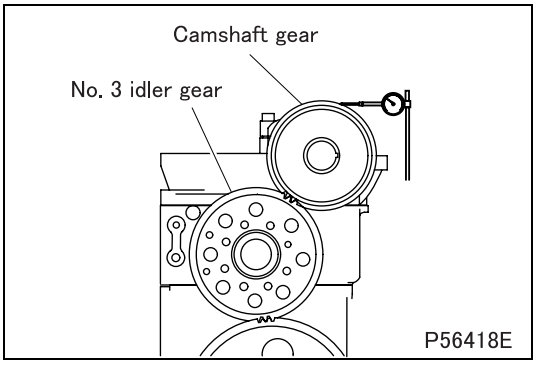

■ **Inspection: Backlash between camshaft gear and No. 3 idler gear**

- Measure the backlash at least at three different locations. If the measurement exceeds the limit, replace the defective part(s).

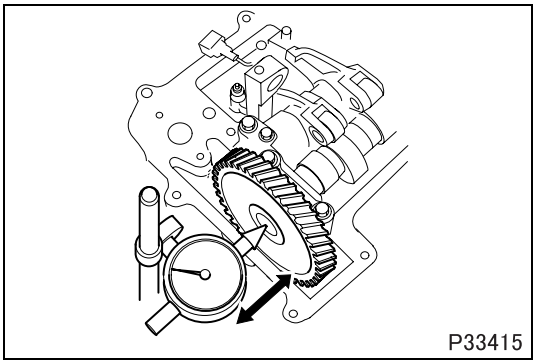

■ **Inspection: Camshaft end play**

- If the measurement exceeds the limit, replace the defective part(s).

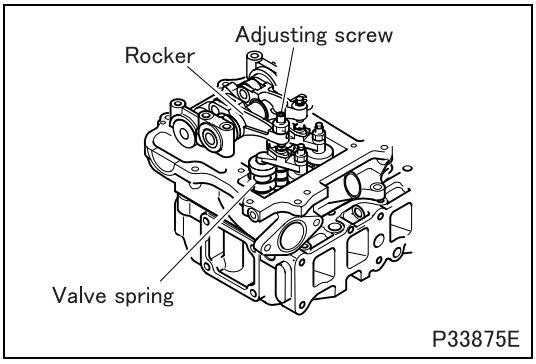

■ **Releasing valve spring force**

- Before loosening the rocker and bracket assembly mounting bolts, check whether the valve springs are compressed by the rockers. If so, loosen the adjusting screws on the rockers to relieve the spring force. This will eliminate the possibility of compressed springs damaging parts when they are released.

◆Removal procedure◆

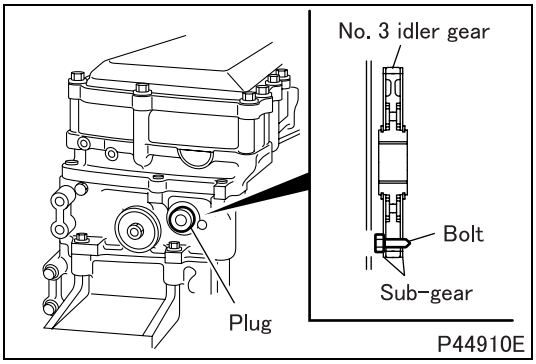

■ **Removal: Camshaft**

- Remove the plug at the rear end of the cylinder head.
- Insert a sub-gear locking bolt (M8 × 1.25 mm) into the dedicated hole in the No. 3 idler gear to lock the sub-gears. Remove the camshaft.

◆Installation procedure◆

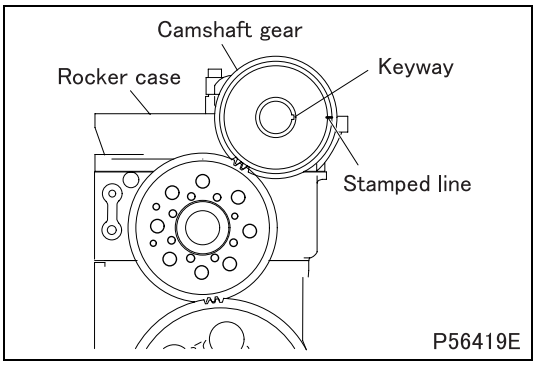

■ **Installation: Camshaft**

- Position the No. 1 cylinder at the top dead center in the compression stroke.
- Install the camshaft such that the stamped line on the camshaft gear is level with the top surface of the rocker case.

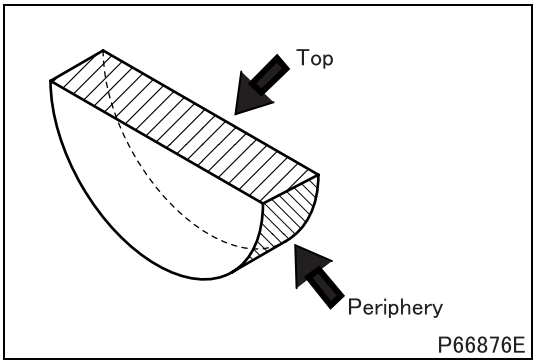

■ **Installation: Packing**

- Apply sealant to the periphery of the packing.
- Install the packing to the rocker case immediately after the sealant application.
- Apply sealant to the top of the packing after installing the rocker case.
- Install the rocker case upper and rocker cover immediately after the sealant application.

CAUTION ⚠

- **Be sure to use the specified sealant. Use of other sealant may cause an oil leak.**
- **Do not start the engine for at least an hour after the rocker case and rocker cover are installed.**
- **If the rocker cover is removed after installed, be sure to re-apply the sealant to the packing.**

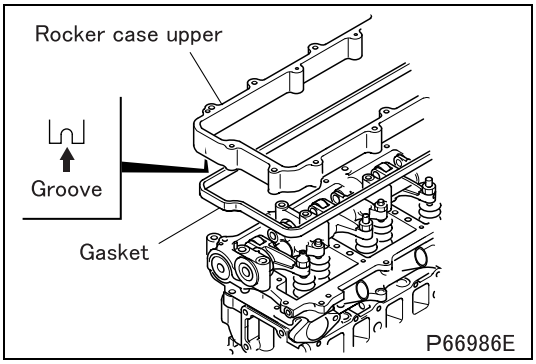

■ **Installation: Rocker case upper gasket**

- Clean the gasket mounting groove in the rocker case if grease and dirt are in it.
- Before installing the gasket, make sure that it is free of grease or any foreign matter that can cause an oil leak.

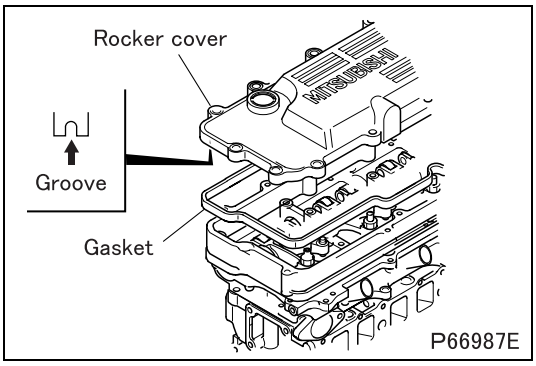

■ **Installation: Rocker cover gasket**

- Clean the gasket mounting groove in the rocker cover if grease and dirt are in it.
- Before installing the gasket, make sure that it is free of grease and any foreign matter that can case an oil leak.

Rocker and Bracket Assembly

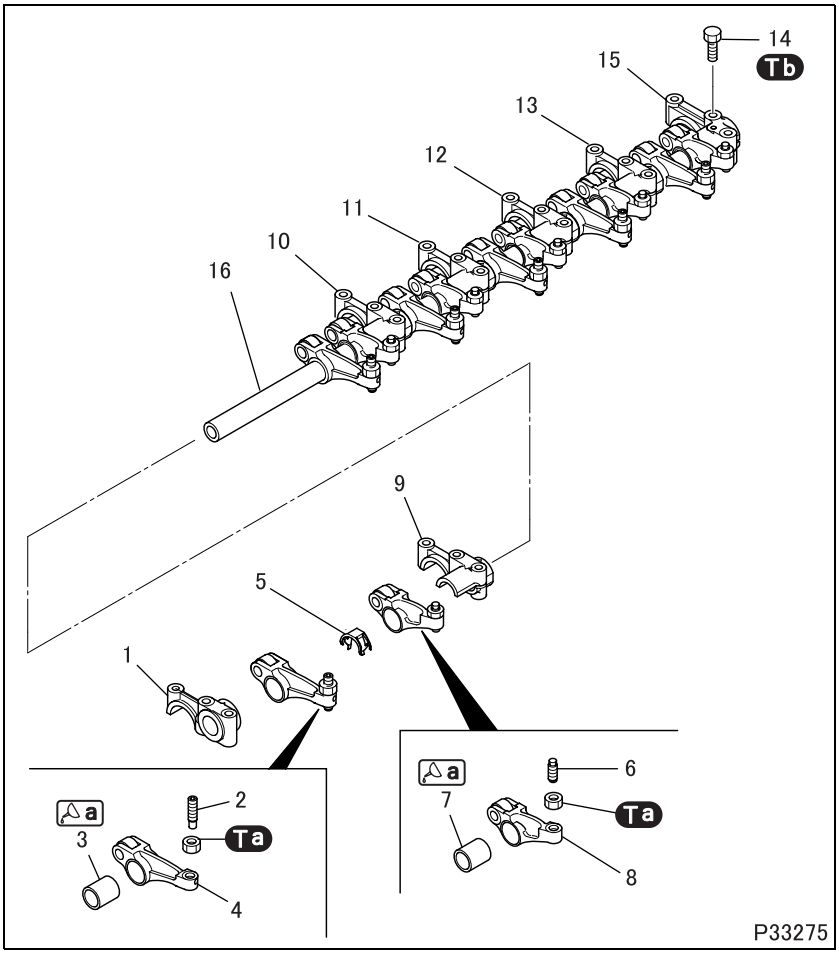

● **Disassembly sequence**

1 Front bracket
2 Adjusting screw
3 Rocker bushing
4 Intake rocker
5 Rocker shaft spring
6 Adjusting screw
7 Rocker bushing
8 Exhaust rocker
9 No. 1 center bracket
10 No. 2 center bracket
11 No. 3 center bracket
12 No. 4 center bracket
13 No. 5 center bracket
14 Set screw
15 Rear bracket
16 Rocker shaft

● **Assembly sequence**

Follow the disassembly sequence in reverse.

Service standards (Unit: mm {in.})

Location	Maintenance item	Standard value	Limit	Remedy
3, 7, 16	Clearance between rocker shaft and bushing	0.006 to 0.076 {0.00024 to 0.0030}	0.114 {0.0045}	Replace
4, 8	Radial clearance of rocker (roller)	0.022 to 0.039 {0.00087 to 0.0015}	–	Replace

Tightening torque (Unit: N·m {ft.lbs, kgf·m})

Mark	Parts to be tightened	Tightening torque	Remarks
Ta	Lock nut (adjusting screw tightening)	34 {25, 3.5}	–
Tb	Set screw (rocker shaft tightening)	3.9 {2.9, 0.4}	–

Lubricant and/or sealant

Mark	Points of application	Specified lubricant and/or sealant	Quantity
a	Inside surface of rocker bushing	Engine oil	As required

Special tools (Unit: mm {in.})

Mark	Tool name and shape	Part No.	Application
a	Rocker bushing puller A: φ 25 {0.98} B: φ 27.5 {1.08} 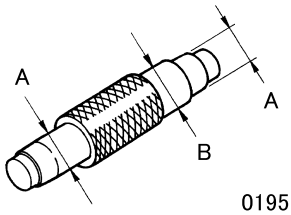 01951	MH062727	Removal and installation of rocker bushing

◆Inspection procedure◆

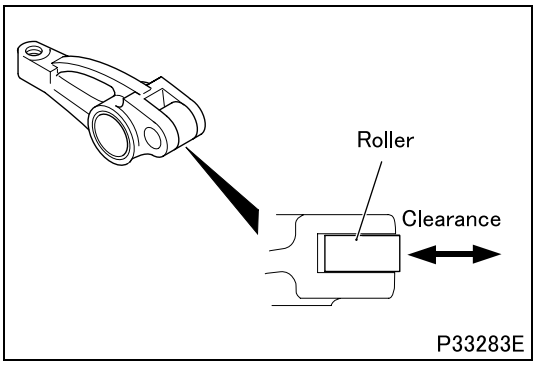

P33283E

■ **Inspection: Radial clearance of rocker (roller)**

- If the measurement deviates from the standard value, replace the defective part(s).

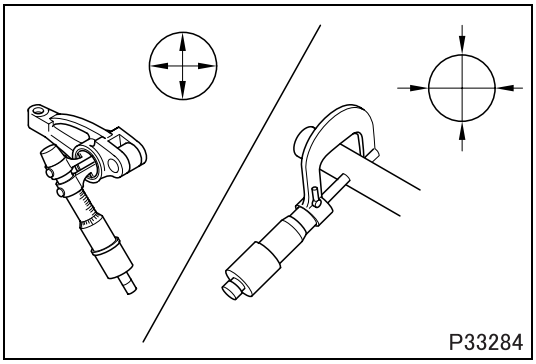
P33284

■ **Inspection: Clearance between rocker shaft and bushing**

- If the measurement exceeds the limit, replace the bushing.

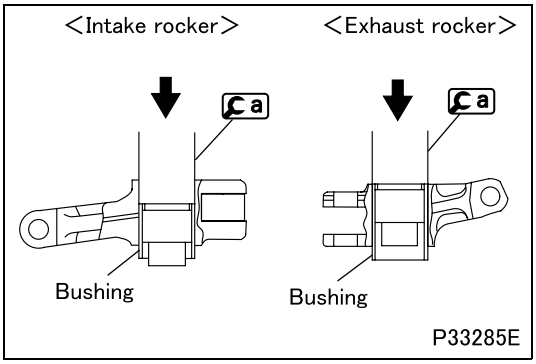

P33285E

Replace of rocker bushing
[Removal]

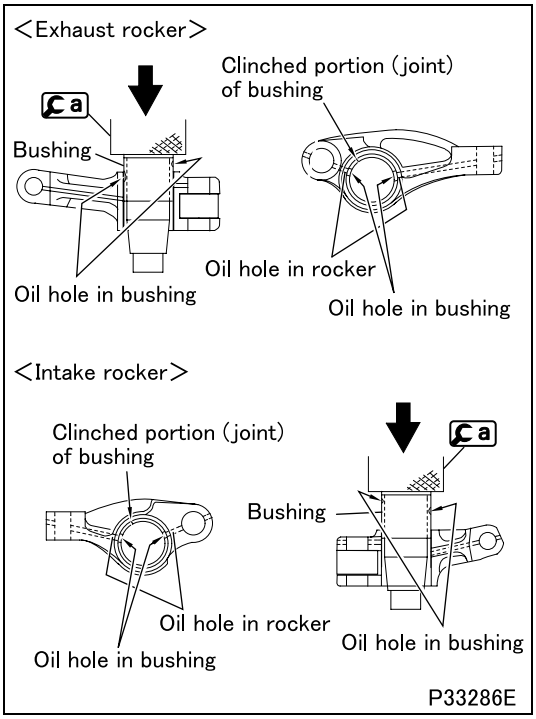

[Installation]

- Assemble the bushing onto the rocker such that the oil holes are aligned as shown in the illustration.
- After assembly, recheck the clearance.
- If the measurement is less than the standard value, ream the bushing.

Camshaft

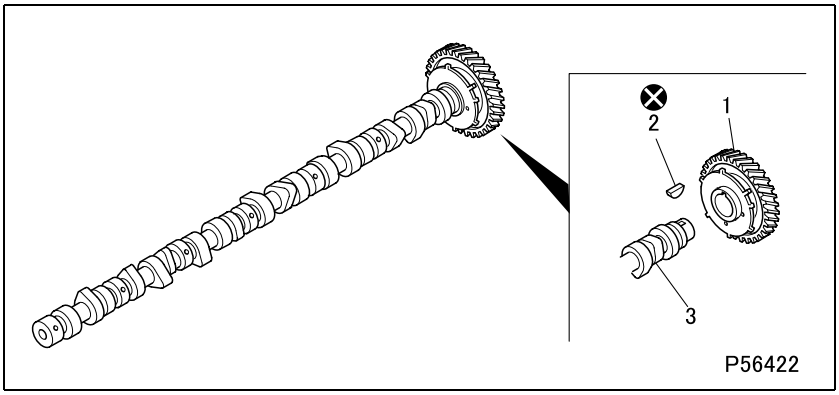

● Disassembly sequence

1 Camshaft gear
2 Key
3 Camshaft

⊗: Non-reusable parts

● Assembly sequence

Follow the disassembly sequence in reverse.

Service standards (Unit: mm {in.})

Location	Maintenance item				Standard value	Limit	Remedy
1, 3	Interference between camshaft gear and camshaft				0.017 to 0.062 {0.00067 to 0.0024}	–	Replace
3	Camshaft	Cam lift	Intake	Lobe diameter : 45.110 {1.775} Base circle diameter : 40.087 {1.578}	5.023 {0.197}	4.973 {0.195}	Replace
			Exhaust	Lobe diameter : 47.370 {1.864} Base circle diameter : 40.286 {1.586}	7.084 {0.278}	7.034 {0.276}	
		Bend			0.02 {0.00079}	0.04 {0.0016}	Replace
		Oil clearance at journal			0.075 to 0.12 {0.0030 to 0.0047}	0.25 {0.0098}	Replace

◆Removal procedure◆

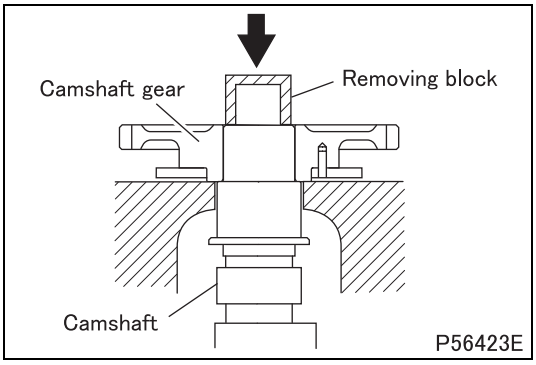

■ Removal: Camshaft gear

- Remove the camshaft gear by pushing on the end of the camshaft with a press or other similar tool.

CAUTION ⚠

- **Do not attempt to remove the camshaft gear with a hammer as damage will result. Use a press or other similar tool.**

◆Inspection procedure◆

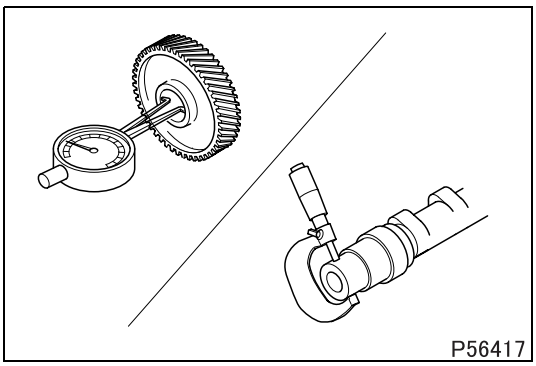
P56417

■ **Inspection: Interference between camshaft gear and camshaft**

- If the measurement deviates from the standard value, replace the defective part(s).

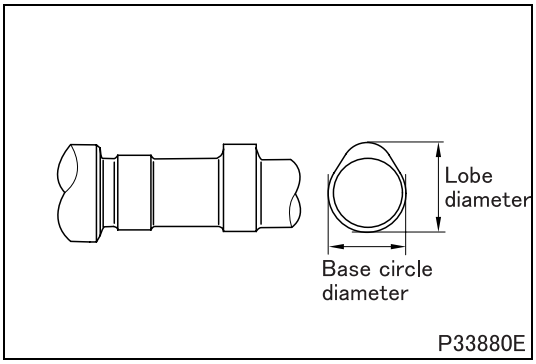

P33880E

■ **Inspection: Camshaft**

(1) Cam lift

- If the measurement (difference between lobe diameter and base circle diameter) is less than the limit, replace the camshaft.

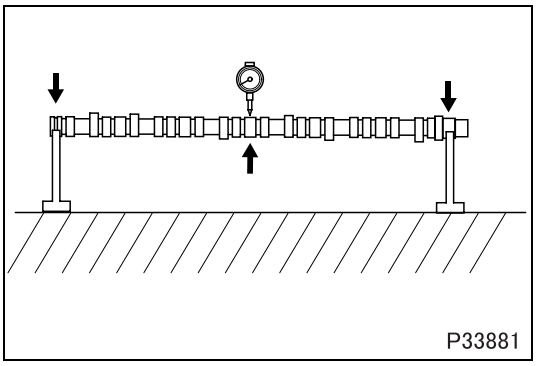
P33881

(2) Bend

- Place supports under the journals at the ends of the camshaft and measure the bend of the camshaft at the central journal. The amount of camshaft bend is obtained by giving the camshaft one turn and dividing the dial gauge reading by two.
- If the measurement exceeds the specified limit, replace the camshaft.

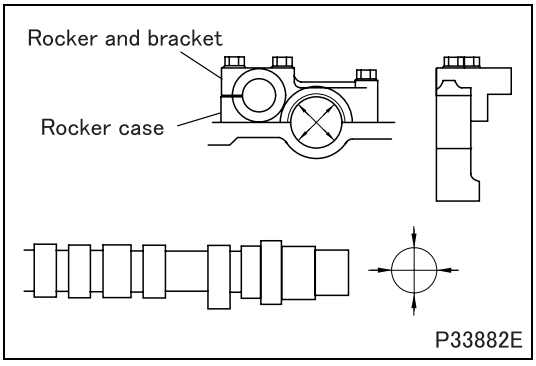

P33882E

(3) Oil clearance at journal

- If the measurement exceeds the limit, replace the defective part(s).

CAUTION ⚠

- **The rocker case and the brackets of the rocker and bracket assembly have been machined together, which means that they all must be replaced together.**

◆Installation procedure◆

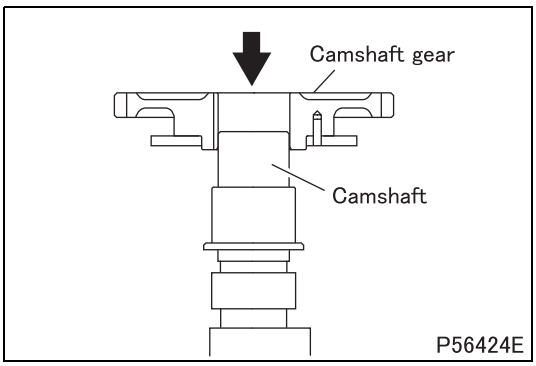

■ **Installation: Camshaft gear**

- Heat the camshaft gear to approximately 150°C {300°F} using a gas burner.

WARNING ⚠

- **The camshaft is extremely hot. Be careful not to touch it.**

- While facing the camshaft gear as shown in the illustration, press it onto the camshaft until it seats snugly on the camshaft.

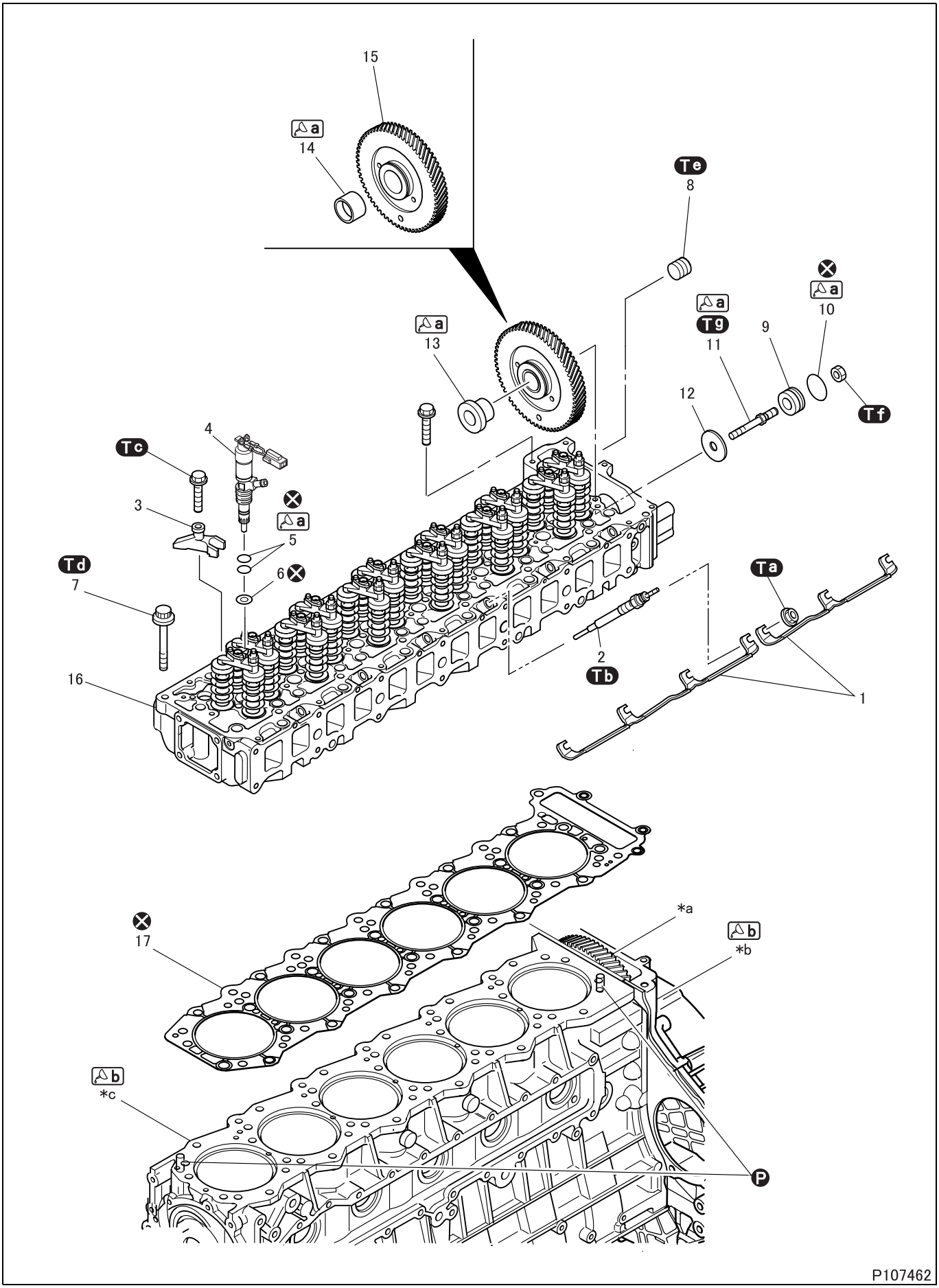
15
a
14
Te
8
a
13
a
Tg
11
9
a
10
12
Tf
4
Tc
3
a
5
Td
7
6
Ta
2
Tb
1
16
17
*a
b
*b
b
*c
P
P107462

● **Disassembly sequence**

1 Connecting plate
2 Glow plug
3 Nozzle bridge
4 Injector (See Gr13A.)
5 O-ring
6 Nozzle tip gasket
7 Cylinder head bolt
8 Plug
9 Collar
10 O-ring
11 No. 3 idler bolt
12 Thrust plate
13 No. 3 idler shaft
14 No. 3 idler gear bushing
15 No. 3 idler gear
16 Cylinder head (See later section.)
17 Cylinder head gasket

***a**: No. 2 idler gear
***b**: Flywheel housing
***c**: Crankcase

Ⓟ: Locating pin
⊗: Non-reusable parts

● **Assembly sequence**

Follow the disassembly sequence in reverse.

Service standards (Unit: mm {in.})

Location	Maintenance item	Standard value	Limit	Remedy
–	Backlash between No. 3 and No. 2 idler gears	0.17 to 0.25 {0.0067 to 0.0098}	0.35 {0.014}	Replace
	No. 3 idler gear end play	0.05 to 0.15 {0.0020 to 0.0059}	0.3 {0.012}	Replace
13, 14	Clearance between No. 3 idler shaft and No. 3 idler gear bushing	0.01 to 0.05 {0.00039 to 0.0020}	0.2 {0.0079}	Replace

Tightening torque (Unit: N·m {ft.lbs, kgf·m})

Mark	Parts to be tightened	Tightening torque	Remarks
Ta	Nut (connecting plate mounting)	1.0 to 1.47 {0.7 to 1.1, 0.1 to 0.15}	–
Tb	Glow plug	15 to 24.5 {11 to 18, 1.5 to 2.5}	–
Tc	Bolt (nozzle bridge mounting)	33 to 38 {24 to 28, 3.4 to 3.9}	–
Td	Cylinder head bolt	78 {58, 8} + $90^{\circ}\ ^{+5^{\circ}}_{0}$ + $90^{\circ}\ ^{+5^{\circ}}_{0}$	• Wet • Reusable up to 3 times
Te	Plug	15 {11, 1.5}	–
Tf	Nut (collar mounting)	50 {37, 5.1}	–
Tg	No. 3 idler bolt	70 {52, 7.1}	–

Lubricant and/or sealant

Mark	Points of application	Specified lubricant and/or sealant	Quantity
a	O-ring	Engine oil	As required
	Threaded portion of No. 3 idler bolt		
	Periphery of No. 3 idler shaft		
	Inside surface of No. 3 idler gear bushing		
b	Top mating surfaces of flywheel housing and crankcase	ThreeBond 1217H	As required

Special tools (Unit: mm {in.})

<table>
<tr><th>Mark</th><th>Tool name and shape</th><th>Part No.</th><th>Application</th></tr>
<tr><td>ca</td><td>Socket wrench
 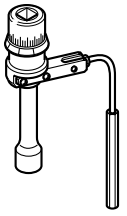
P01984</td><td>MH063388</td><td>Installation of cylinder head</td></tr>
<tr><td>cb</td><td>Idler gear push-puller
<table><tr><th>A</th><th>B</th><th>C</th></tr><tr><td>ϕ 32
{1.26}</td><td>ϕ 35
{1.38}</td><td>ϕ 32
{1.26}</td></tr></table> 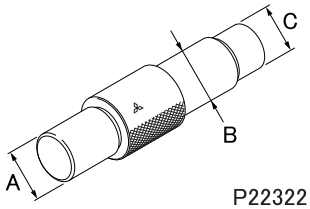
P22322</td><td>MH061779</td><td>Removal and installation of No. 3 idler gear bushing</td></tr>
</table>

◆Work before removal◆

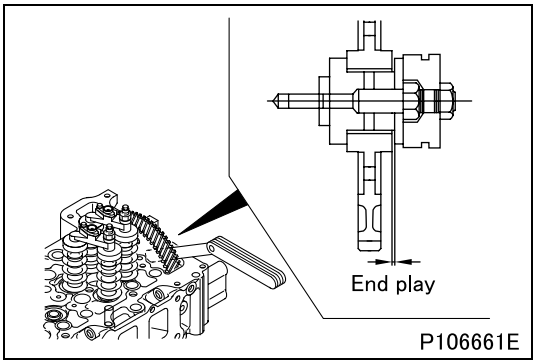

P106661E

■ **Inspection: End play of No. 3 idler gear**

- If the measurement exceeds the limit, replace the defective part(s).

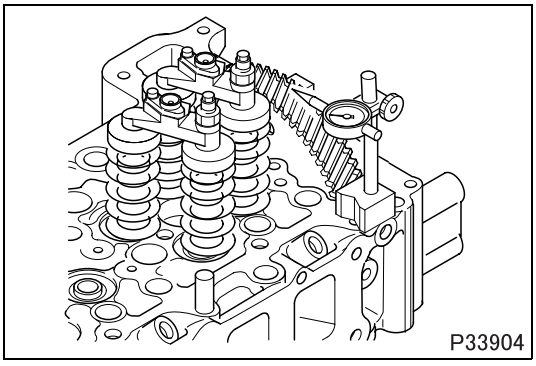
P33904

■ **Inspection: Backlash between No. 2 and No. 3 idler gears**

- If the measurement exceeds the limit, replace the defective part(s).

◆Removal procedure◆

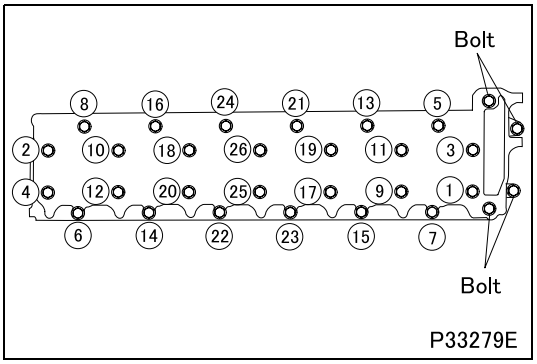

■ Removal: Cylinder head

- Remove the bolts (× 4).
- Progressively loosen the cylinder head bolts in the order shown in the illustration, going over them several times, before eventually removing them.

■ Removal: Cylinder head gasket

CAUTION ⚠

- **Be careful not to scratch the cylinder head, crankcase and flywheel housing when removing the cylinder head gasket.**

◆Inspection procedure◆

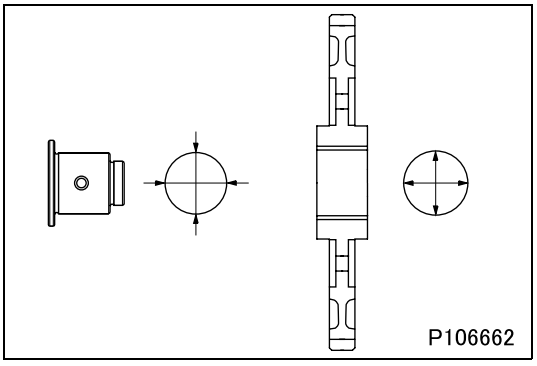

■ Inspection: Clearance between No. 3 idler shaft and No. 3 idler gear bushing

- If the measurement exceeds the limit, replace the bushing.

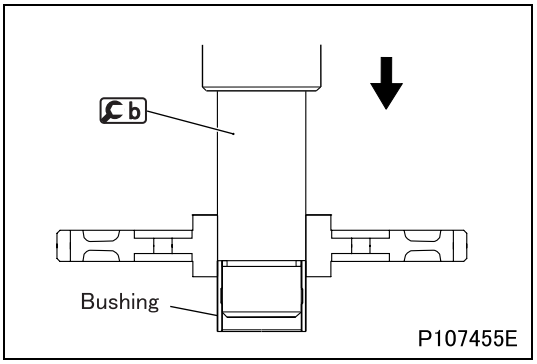

Replacement of No. 3 idler gear bushing
[Removal]

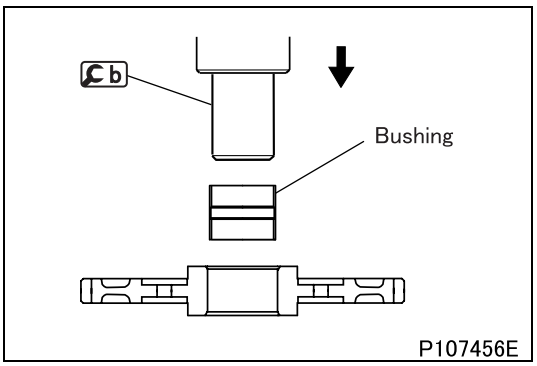

[Installation]

- Using b, press in the bushing until b contacts the No. 3 idler gear.
- After installation, measure the clearance again.
- If the measurement is less than the standard valve, ream the bushing.

◆Installation procedure◆

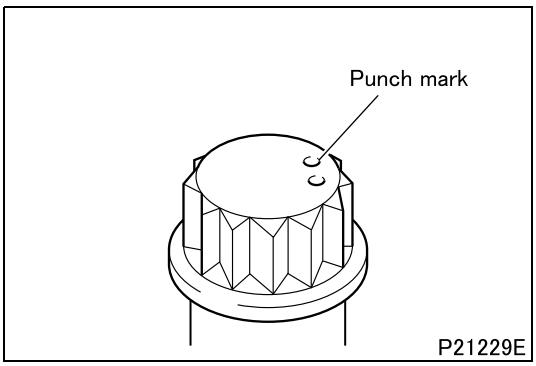

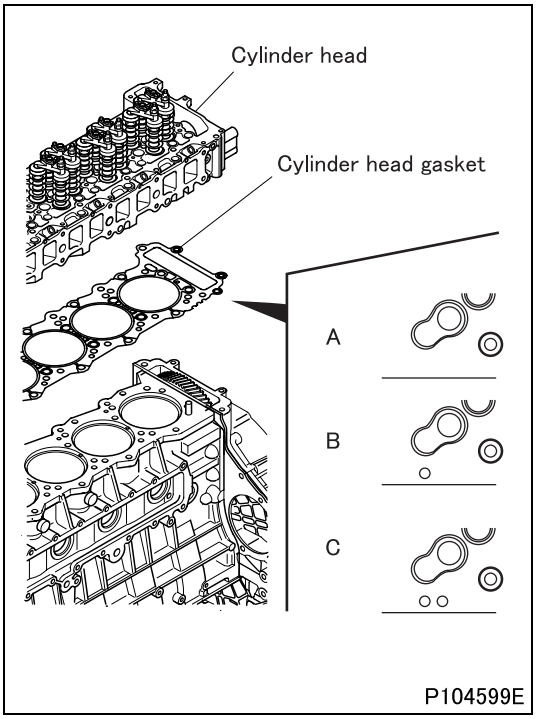

■ **Installation: Cylinder head**

CAUTION ⚠

- **Before fitting the cylinder head bolts, check the punch marks on each bolt's head. Do not use the bolt if there are three punch marks.**
  The punch marks indicate the number of times each bolt has been tightened using the torque-turn tightening method. Any bolt that already has three punch marks must be replaced.

- The cylinder head gasket comes in three sizes. Choose the gasket appropriate for the cylinder head by the following procedure.
  - Measure the amount of piston projection for every cylinder. (See the PISTONS, CONNECTING RODS AND CYLINDER LINERS section.)
  - Select a cylinder head gasket with the appropriate thickness for the average of the piston projection measurements from the table below.
  - If any of the piston projection measurements is more than 0.05 mm {0.0020 in.} larger than the average value, than use the gasket one class higher than that class (A→B, B→C).

Unit: mm {in.}

Piston projection	Cylinder head gasket	
	Size	Thickness when tightened
0.804 to 0.872 {0.032 to 0.034}	"A"	1.70 ± 0.05 {0.067 ± 0.0020}
0.873 to 0.941 {0.035 to 0.037}	"B"	1.75 ± 0.05 {0.069 ± 0.0020}
0.942 to 1.011 {0.038 to 0.040}	"C"	1.80 ± 0.05 {0.071 ± 0.0020}

- The size class of the cylinder head gasket can be determined from the size mark or the shape of the notches cut on the gasket edge.

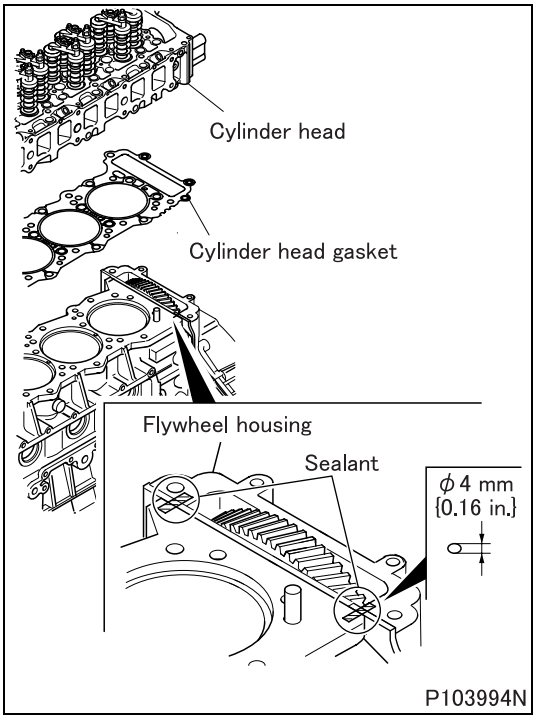

- Apply sealant onto the areas (shown in the illustration) on the top surfaces of the flywheel housing and crankcase.
- Within three minutes following the application, install the cylinder head onto the crankcase using the cylinder head bolts and a cylinder head gasket.
  Ensure that the gasket is faced as shown in the illustration.

CAUTION ⚠

- **Remove oil or any other contamination from the surfaces where sealant is to be applied.**
- **Take care not to spread the sealant beyond the application areas during installation.**
- **Do not start the engine for at least an hour after installation.**
- **Whenever the cylinder head bolts are subsequently loosened or removed, the cylinder head gasket must be replaced and sealant reapplied upon reassembly.**
- **The gasket being used must have a thickness appropriate for the protrusion of the pistons. If pistons, connecting rods or other relevant parts are replaced, check the pistons for any change in protrusion and select the correct gasket.**

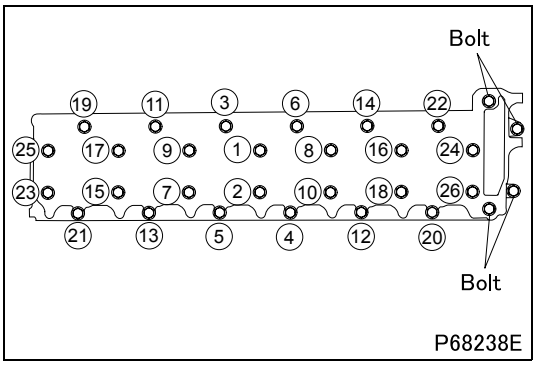

- Tighten the cylinder head bolts to a torque of 78 N·m {58 ft.lbs, 8 kgf·m} in the order shown in the illustration.
- Install the four bolts.
- Further tighten the bolts, in the order shown and as follows.

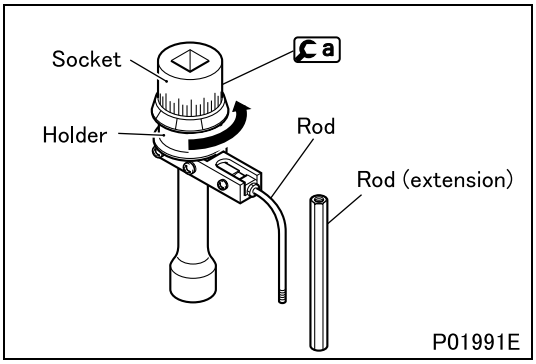

- Turn the holder of a counterclockwise to pretension the internal spring.

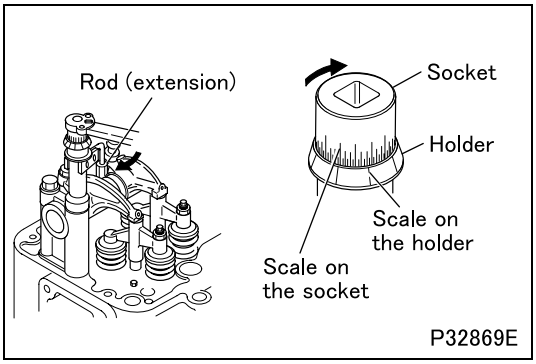

- Set [Ca] such that the rod (extension) is pressed against the rocker shaft bracket by the force of the spring.
- Align any line on the holder scale with any line on the socket scale. (This will be used as the reference point = 0°.)
- From the reference point, turn the socket by $90° \, {}^{+5°}_{0}$ in the direction shown. Each division on the holder scale represents 5°.
- Further turn the socket by $90° \, {}^{+5°}_{0}$.
- After tightening the cylinder head bolts within the plastic region, punch a mark on the bolt heads to record the number of times that they have been tightened.

CAUTION ⚠

- **Cylinder head bolts that have been tightened using the torque-turn method must never be additionally tightened after the final angular tightening.**

M E M O

CYLINDER HEAD AND VALVE MECHANISM

Cylinder Head

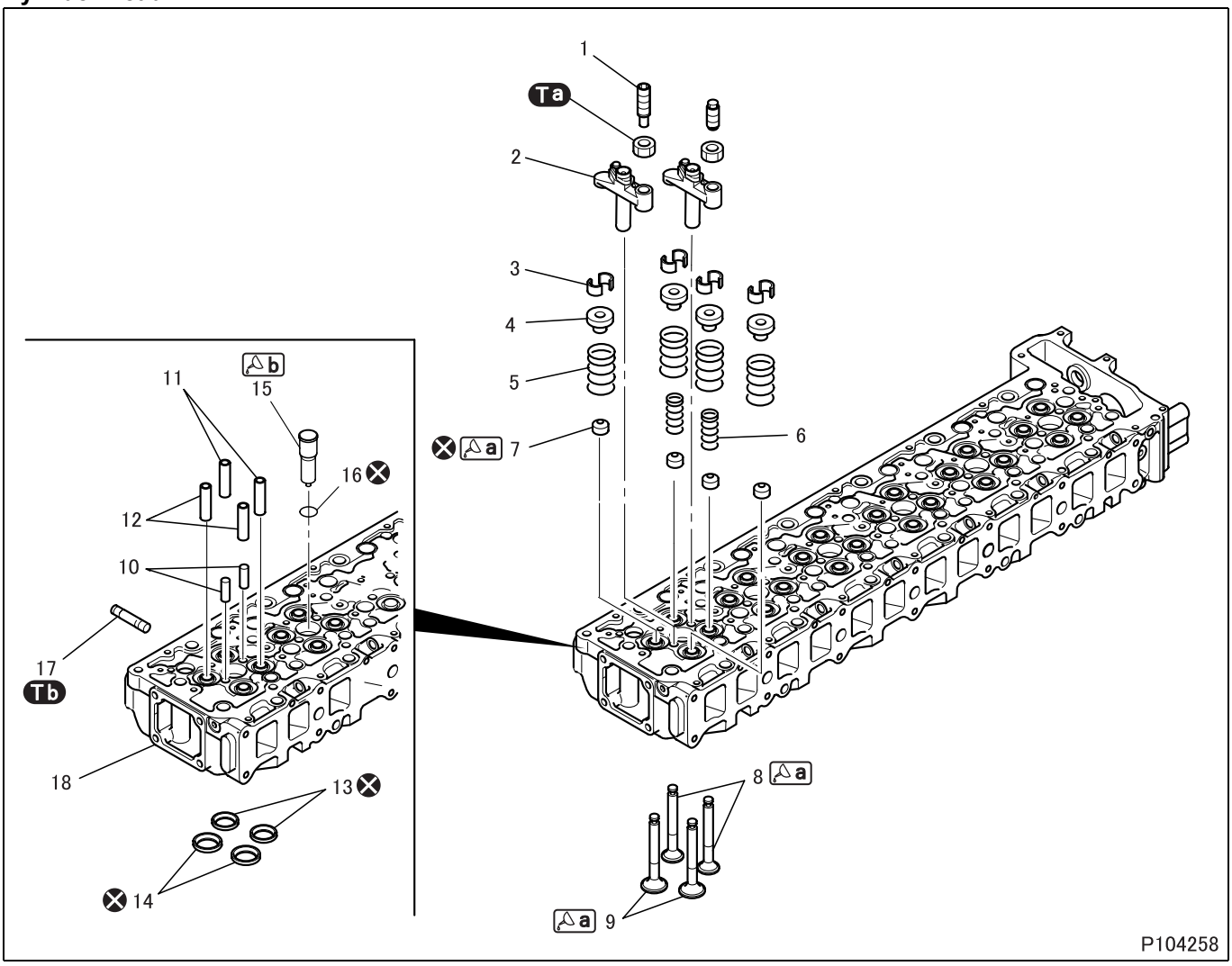

● **Disassembly sequence**

1 Adjusting screw
2 Valve bridge
3 Valve cotter
4 Upper retainer
5 Outer valve spring
6 Inner valve spring
<Only exhaust valve>
7 Valve stem seal
8 Exhaust valve
9 Intake valve
10 Valve bridge guide
11 Exhaust valve guide
12 Intake valve guide
13 Exhaust valve seat
14 Intake valve seat
15 Nozzle tube
16 O-ring
17 Stud bolt
18 Cylinder head

⊗: Non-reusable parts

● **Assembly sequence**

Follow the disassembly sequence in reverse.

CAUTION ⚠

- **When an exhaust valve or intake valve has been removed, make sure to replace the valve stem seal.**

Service standards (Unit: mm {in.})

Location	Maintenance item			Standard value	Limit	Remedy
2, 10	Valve bridge-to-valve bridge guide clearance			0.01 to 0.04 {0.00039 to 0.0016}	0.1 {0.0039}	Replace
5	Outer valve spring	Intake side	Free length	71.7 {2.82}	68.1 {2.68}	Replace
			Installed load (46.5 {1.83} in installed length)	407 N {91 lbs, 41.5 kgf}	367 N {83 lbs, 37.4 kgf}	Replace
			Squareness	–	2° or less	Replace
		Exhaust side	Free length	66.47 {2.62}	63.1 {2.48}	Replace
			Installed load (46.5 {1.83} in installed length)	280 N {63 lbs, 28.6 kgf}	252 N {37 lbs, 25.7 kgf}	Replace
			Squareness	–	2° or less	Replace
6	Inner valve spring	Free length		60.61 {2.39}	57.6 {2.27}	Replace
		Installed load (41.8 in installed length)		127 ± 6.3 N {29 ± 1.4 lbs, 13 ± 0.6 kgf}	121 N {27 lbs, 12.3 kgf}	Replace
		Squareness		–	2° or less	Replace
8	Exhaust valve	Stem outside diameter		$\phi 8\ ^{-0.060}_{-0.075}$ {$0.31\ ^{-0.0024}_{-0.0030}$}	ϕ7.85 {0.31}	Replace
		Sinkage from cylinder head bottom surface		1.3 ± 0.2 {0.051 ± 0.0079}	1.55 {0.061}	Inspect
		Valve margin		1.5 {0.059}	1.2 {0.047}	Replace
		Seat angle		45° ± 15’	–	Correct
8, 11	Exhaust valve stem-to-valve guide clearance			0.07 to 0.10 {0.0028 to 0.0039}	0.2 {0.0079}	Replace
9	Intake valve	Stem outside diameter		$\phi 8\ ^{-0.025}_{-0.040}$ {$0.31\ ^{-0.00098}_{-0.0016}$}	ϕ7.85 {0.31}	Replace
		Sinkage from cylinder head bottom surface		1.3 ± 0.2 {0.051 ± 0.0079}	1.55 {0.061}	Inspect
		Valve margin		1.5 {0.059}	1.2 {0.047}	Replace
		Seat angle		45° ± 15’	–	Correct
9, 12	Intake valve stem-to-valve guide clearance			0.06 to 0.09 {0.0024 to 0.0035}	0.2 {0.0079}	Replace
10	Valve bridge guide in outside diameter			9.989 to 10 {0.393 to 0.394}	9.94 {0.391}	Replace
13	Exhaust valve seat width			2.3 to 2.7 {0.091 to 0.11}	3.3 {0.13}	Correct or replace
14	Intake valve seat width			1.8 to 2.2 {0.071 to 0.087}	2.8 {0.11}	Correct or replace
18	Cylinder head	Bottom surface distortion		0.08 {0.0031} or less	0.2 {0.0079}	Correct or replace
		Height from top surface to bottom surface		94.9 to 95.1 {3.736 to 3.744}	94.5 {3.72}	Replace
		Valve seat hole diameters	Intake side	$\phi 42\ ^{+0.025}_{0}$ {$\phi 1.65\ ^{0.00098}_{0}$}	–	Replace
			Exhaust side	$\phi 38\ ^{+0.025}_{0}$ {$\phi 1.50\ ^{0.00098}_{0}$}	–	

Tightening torque (Unit: N·m {ft.lbs, kgf·m})

Mark	Parts to be tightened	Tightening torque	Remarks
Ta	Lock nut (valve bridge adjusting screw tightening)	60 {44, 6.1}	–
Tb	Stud bolt	29 {21, 3.0}	–

Lubricant and/or sealant

Mark	Points of application	Specified lubricant and/or sealant	Quantity
a	Lip of valve stem seal	Engine oil	As required
	Stem and end of valve		
b	Nozzle tube	ThreeBond 1211	As required

Special tools (Unit: mm {in.})

Mark	Tool name and shape	Part No.	Application
a	Valve lifter	MH061668	Removal and installation of valve cotters
b	Valve lifter hook	MH061679	
c	Valve lifter seat A: ϕ 38 {1.50} 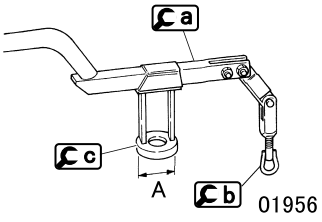 01956	MH061772	
d	Valve stem seal installer A: ϕ 25 {0.98}, B: ϕ 9 {0.35} 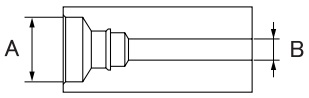 P01957	MH062689	Installation of valve stem seals
e	Valve lapper 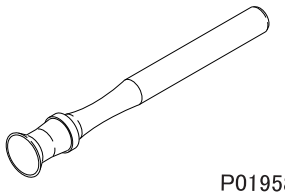 P01958	30091-07500	Lapping valves and valve seats
f	Valve bridge guide installer A: ϕ 10 {0.39}, B: 37.2 {1.46} 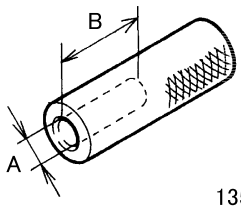 13599	MH062724	Installation of valve bridge guides
g	Valve guide remover A: ϕ 8 {0.31}, B: ϕ 12 {0.47} 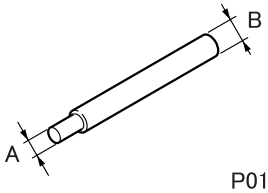 P01959	31391-10500	Removal of valve guides

<table>
<tr><th>Mark</th><th>Tool name and shape</th><th>Part No.</th><th>Application</th></tr>
<tr><td>h</td><td>Valve guide installer
<table><tr><th>A</th><th>B</th><th>C</th></tr><tr><td>ϕ 25.5
{1.00}</td><td>ϕ 13
{0.51}</td><td>17
{0.67}</td></tr></table> 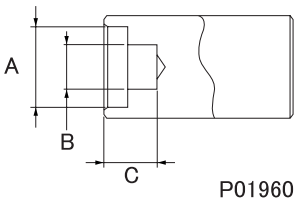
P01960</td><td>MH062726</td><td>Installation of valve guides</td></tr>
<tr><td>i</td><td>Caulking tool body
 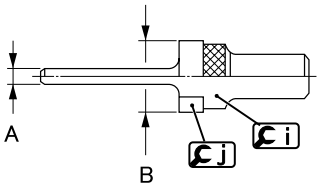
P57612</td><td>31391-13100</td><td rowspan="2">Installation of valve seat</td></tr>
<tr><td>j</td><td>Installer ring
<table><tr><th></th><th>A</th><th>B</th></tr><tr><td>Intake valve</td><td>ϕ 8
{0.31}</td><td>ϕ 42
{1.65}</td></tr><tr><td>Exhaust valve</td><td>ϕ 8
{0.31}</td><td>ϕ 38
{1.50}</td></tr></table></td><td>MH062725
<Intake valve>
MH063605
<Exhaust valve></td></tr>
<tr><td>k</td><td>Nozzle tube remover
<table><tr><th>A</th><th>B</th></tr><tr><td>ϕ 8.7</td><td>ϕ 12.5</td></tr></table> 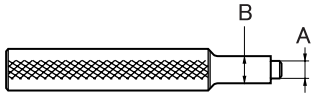
P13597</td><td>MH061232</td><td>Removal of nozzle tube</td></tr>
<tr><td>l</td><td>Nozzle tube installer bolt
<table><tr><th>A</th><th>B</th></tr><tr><td>ϕ 8.5</td><td>M18 × 1.5</td></tr></table> 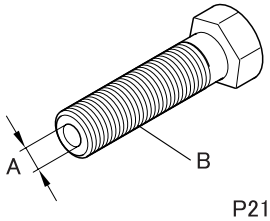
P21244</td><td>MH061231</td><td rowspan="3">Installation of nozzle tube</td></tr>
<tr><td>m</td><td>Nozzle tube installer body
<table><tr><th>A</th></tr><tr><td>M18 × 1.5</td></tr></table> 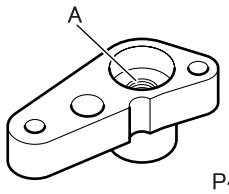
P40697</td><td>MH062976</td></tr>
<tr><td>n</td><td>Nozzle tube stamp
<table><tr><th>A</th></tr><tr><td>ϕ 8</td></tr></table> 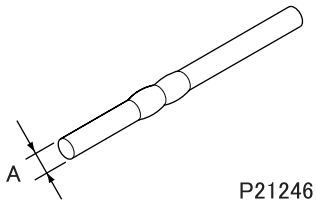
P21246</td><td>MH062977</td></tr>
</table>

◆Removal procedure◆

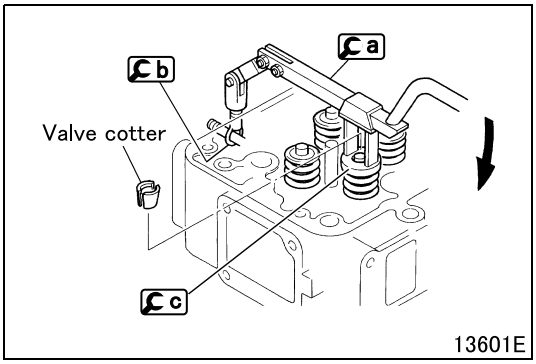

■ **Removal: Valve cotters**

- Using Ca, Cb and Cc, remove the valve cotter while compressing the valve spring(s) evenly.

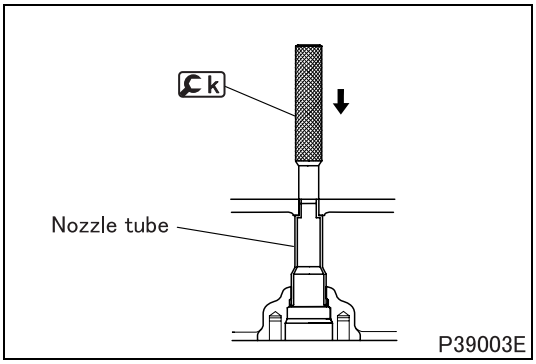

■ **Removal: Nozzle tube**

◆Inspection procedure◆

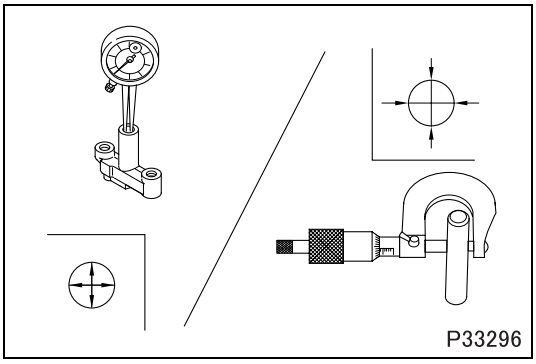

■ **Inspection: Valve bridge and valve bridge guide**

(1) Valve bridge-to-guide clearance

- If the measurement exceeds the limit, replace the defective part(s).

(2) Outside diameter of valve bridge guide

- If the measurement is less than the limit or the valve bridge guide is worn extremely unevenly, replace the valve bridge guide.

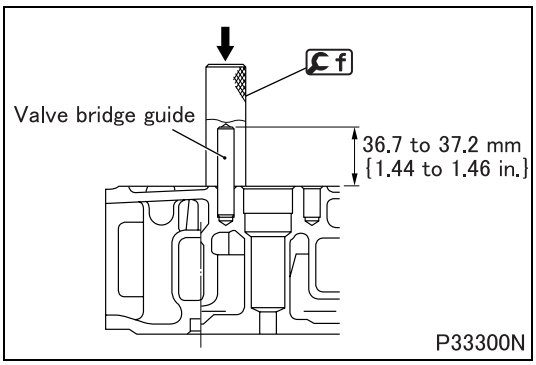

Replacement of valve bridge guide
[Installation]

- Using Cf, install the valve bridge guide until Cf comes into positive contact with the cylinder head.

CAUTION ⚠

- **The valve bridge guide must be installed to the specified depth of the cylinder head. Correct installation can only be possible by using Cf.**
- **Before installation, ensure that no water, oil or other foreign matter is in the installation hole.**

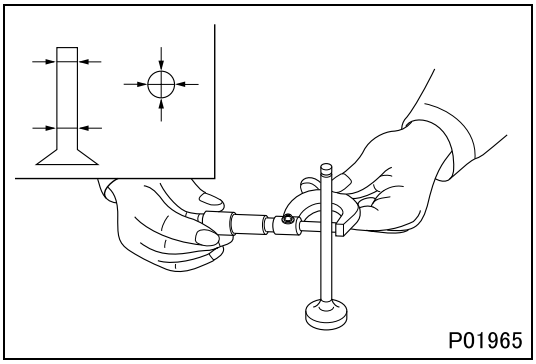

■ **Inspection: Intake and exhaust valve**

- If a valve is corrected or replaced with a new one as a result of the following inspection, make sure to lap the valve and valve seat.

(1) Valve stem outside diameter

- Replace the valve if the stem's outside diameter is below the limit or is severely worn.

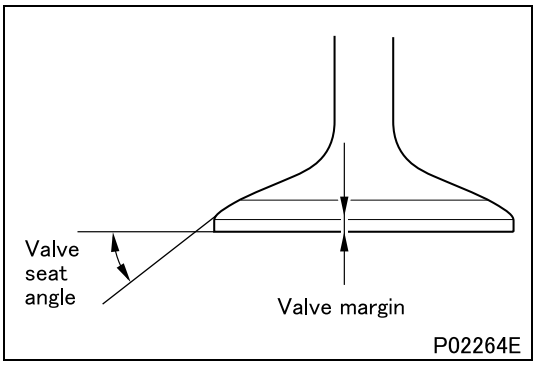

(2) Valve seat angle

- Reface the valve if the measured valve is not within the standard valve range.

(3) Valve margin

- Reface or replace the valve if the measured valve exceeds the specified limit.

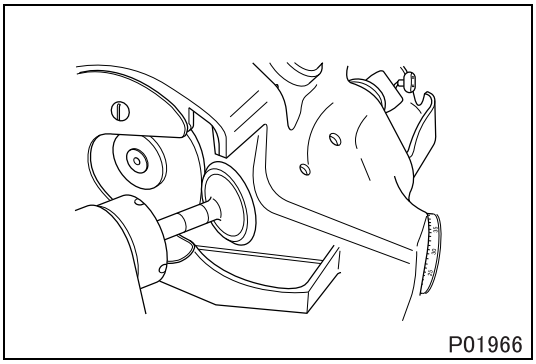

Refacing

- Limit grinding to a necessary minimum.
- If the valve margin is below the limit after grinding, replace the valve.
- After grinding, make sure to lap the valve and valve seat.

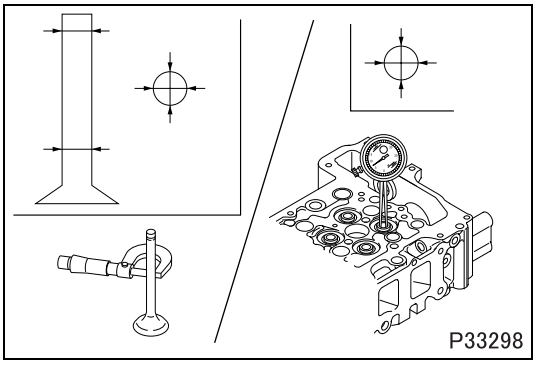

■ **Inspection: Valve-to-valve guide clearance**

- If the clearance exceeds the specified limit, replace the defective part(s).

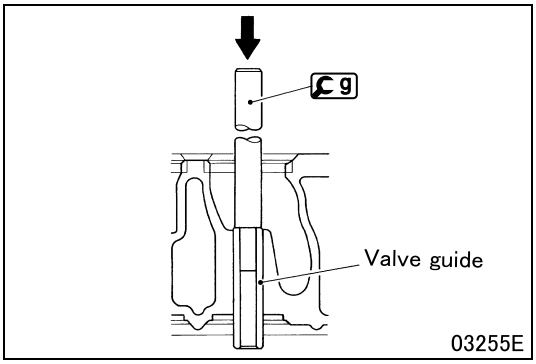

Replacement of valve guides
[Removal]

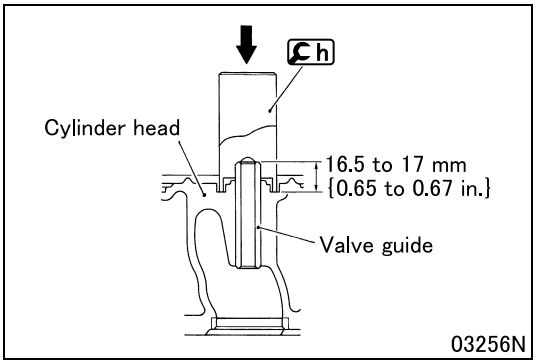

[Installation]

- Install the valve guide until h sits snugly on the cylinder head.

CAUTION ⚠

- **The valve guide must protrude from the cylinder head by the specified amount. Correct installation can only be possible by using h.**
- **The valve guides for the exhaust valves are longer than the valve guides for the inlet valves.**

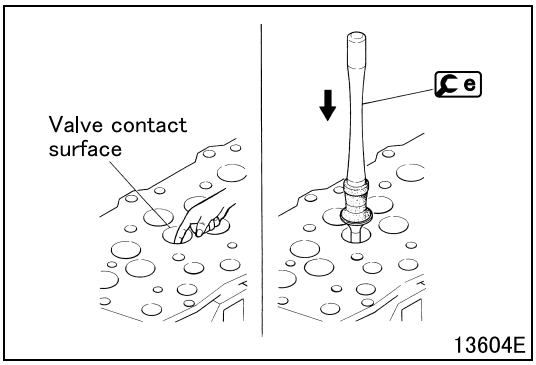

■ Inspection: Contact between valve and valve seat

- Before starting inspection, check that the valve and valve guide are intact.
- Apply an even coat of red lead to the valve contact surface of the valve seat.
- Strike the valve once against the valve seat. Do not rotate the valve during this operation.

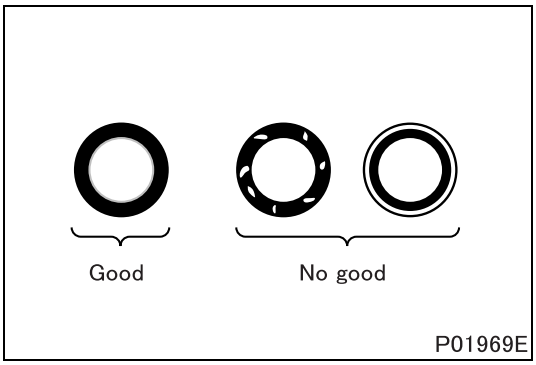

- If the red lead deposited on the valve indicates a poor contact pattern, take either of the following corrective actions.

Contact pattern	Corrective action
Minor defect	Lapping
Serious defect	Reface or replace valve and valve seat

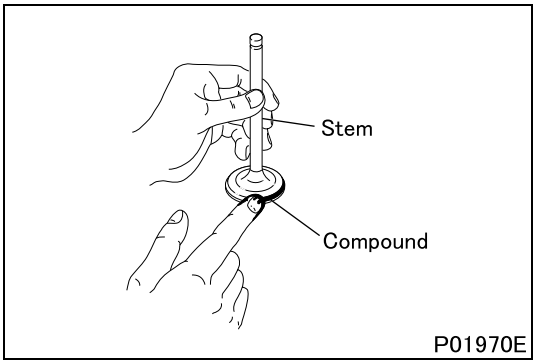

Lapping

- Lap the valve in the following sequence.
- Apply a thin coat of lapping compound to the seat contact surface of the valve.
- Start with an intermediate-grit compound (120 to 150 grit) and finish with a fine-grit compound (200 grit or more).
- Adding a small amount of engine oil to the lapping compound can facilitate even application.

CAUTION ⚠

- **Do not put any compound on the stem.**

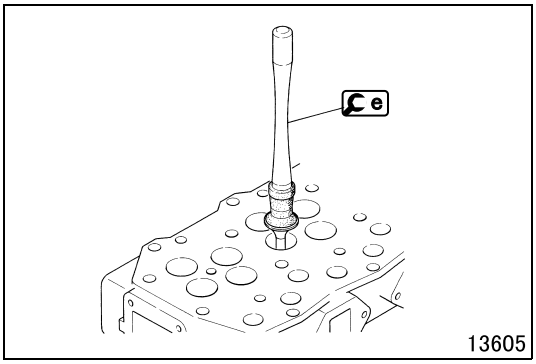

- Strike the valve several times against the valve seat while rotating the valve a little at a time.
- Wash away the compound with diesel fuel.
- Apply engine oil to the valve contact surface of the valve seat and rub in the valve and seat well.
- Inspect the contact pattern of the valve and valve seat again.
- If the contact pattern is still defective, replace the valve seat.

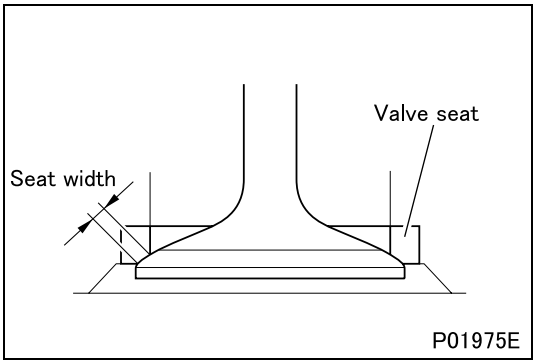

■ Inspection: Valve seats

- If a valve is corrected or replaced with a new one as a result of the following inspection, make sure to lap the valve and valve seat.

(1) Valve seat width

- If the measurement exceeds the limit, reface or replace the valve seat.

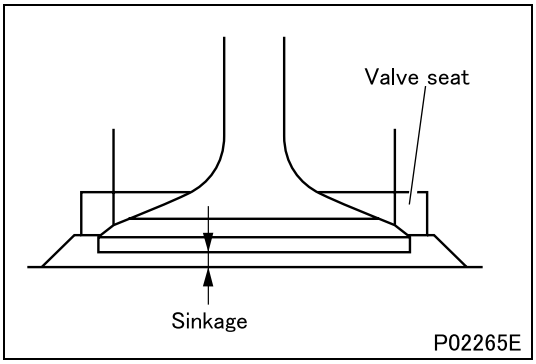

(2) Valve sinkage from cylinder head bottom surface

- Perform measurement keeping the valve in close contact with the valve seat.
- If the measurement exceeds the limit, adjust or replace the defective part(s).

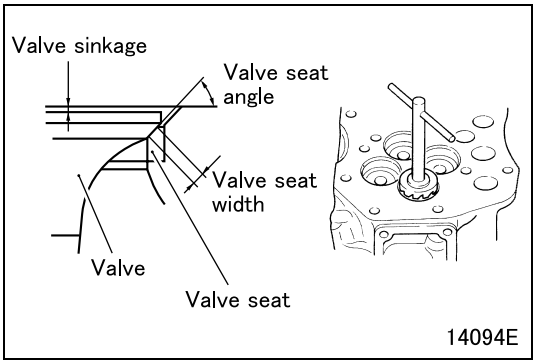

Refacing the valve seat

- Grind the valve seat using a valve seat cutter or valve seat grinder.
- Place a piece of sandpaper of approximately #400 between the cutter and valve seat and grind the valve seat lightly.
- Use a 15° or 75° cutter to cut the valve seat to a width within the standard range.

CAUTION ⚠

- **Make sure that the valve seat refacing does not cause the valve sinkage to exceed the specified limit.**

- After refacing, lap the valve and valve seat.

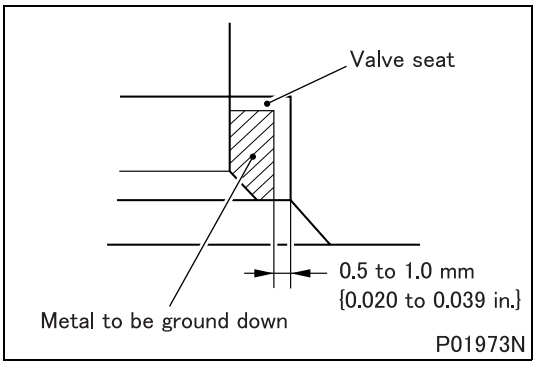

Replacement of valve seat
[Removal]

- The valve seats are installed by expansion fitting. To remove a valve seat, grind inside the metal stock to reduce the wall thickness, then remove the valve seat at room temperature.

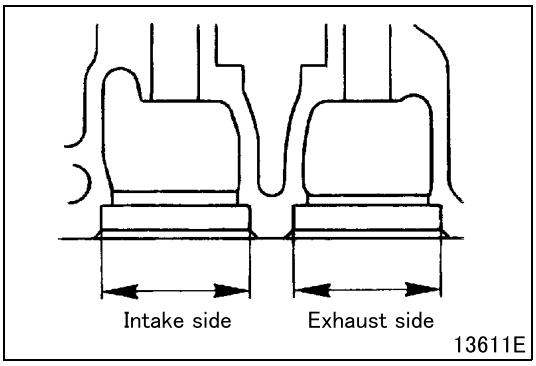

[Installation]

- Measure the diameter of the valve seat hole in the cylinder head.
- If the measurement deviates from the standard valve, replace the cylinder head.

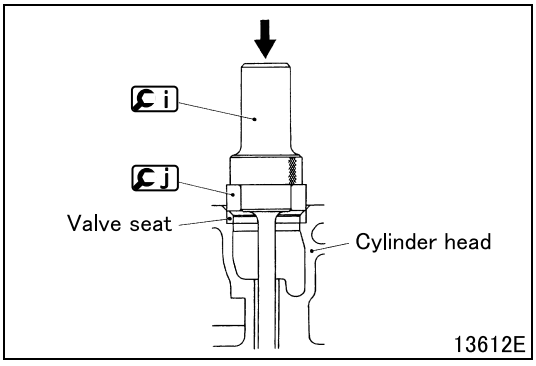

- Chill the valve seat thoroughly by immersing in it in liquid nitrogen.
- Install the valve seat in the cylinder head using i and j.
- Lap the valve seat and valve.

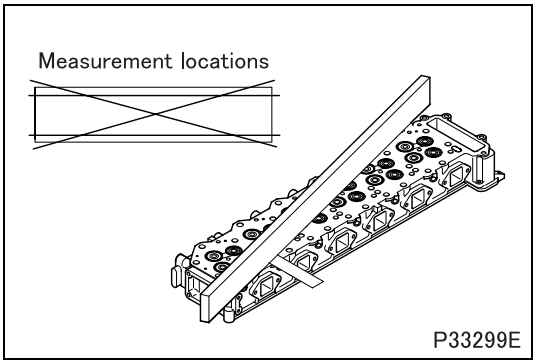

■ **Inspection: Cylinder head bottom surface distortion**

- If the distortion exceeds the specified limit, rectify it using a surface grinder.

CAUTION ⚠

- **Make sure that the height of the cylinder head from the top surface to the bottom surface is not reduced to a value below the specified limit.**

◆Installation procedure◆

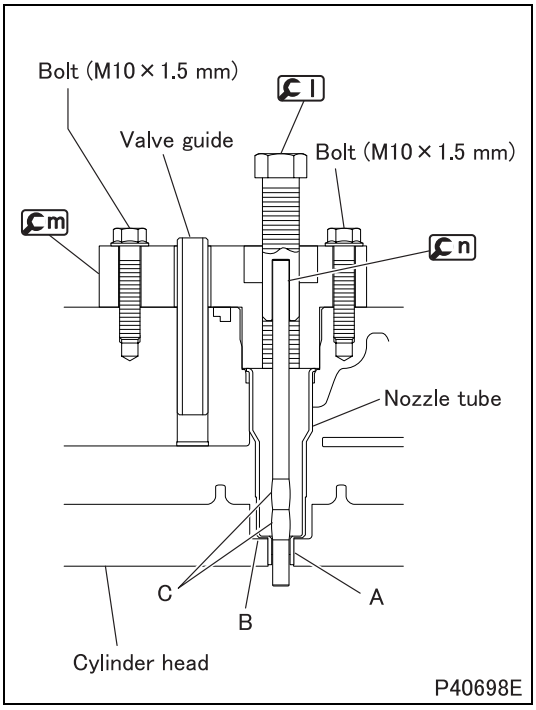

■ **Installation: Nozzle tube**

- Clean the mounting holes of the nozzle tube on the cylinder head.
- Apply a sealant to the perimeter A of the tip of the nozzle tube.
- Push in the nozzle tube by hand until it contacts surface B of the cylinder head.
- Tighten [m] with the bolt and press the nozzle tube onto surface B of the cylinder head.
- Apply engine oil to section C of [n].
- Screw in [l] until [n] can be pulled out from the bottom of the cylinder head.

CAUTION ⚠

- **When installing the nozzle tube, be sure to perform a leak test to check for airtightness.**

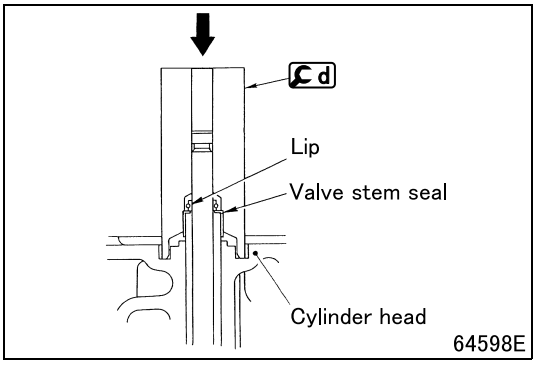

■ **Installation: Valve stem seal**

- Apply engine oil to the lip of the valve stem seal.
- Install the valve stem seal until [d] sits snugly on the cylinder head.

CAUTION ⚠

- **After installing the valve stem seal, check that its spring is not deformed or damaged.**

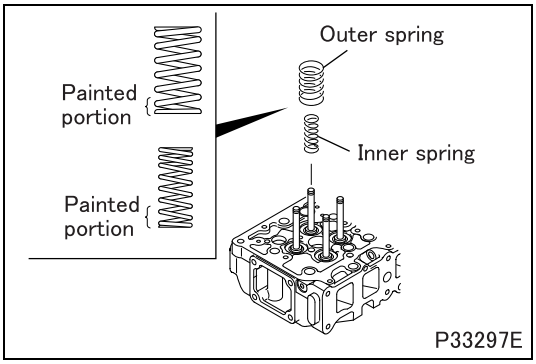

■ **Installation: Valve spring**

- Install the outer and inner valve springs onto the cylinder head while facing them as shown in the illustration.

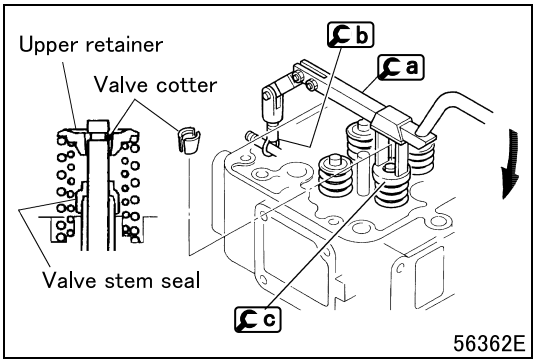

■ **Installation: Valve cotter**

- Using a, b and c, install the valve cotter while compressing the valve spring(s) evenly.

CAUTION ⚠

- **Do not compress the valve spring(s) too much, or the upper retainer will contact the valve stem seal and damage will result.**

M E M O

PISTON AND CONNECTING ROD, CYLINDER LINER

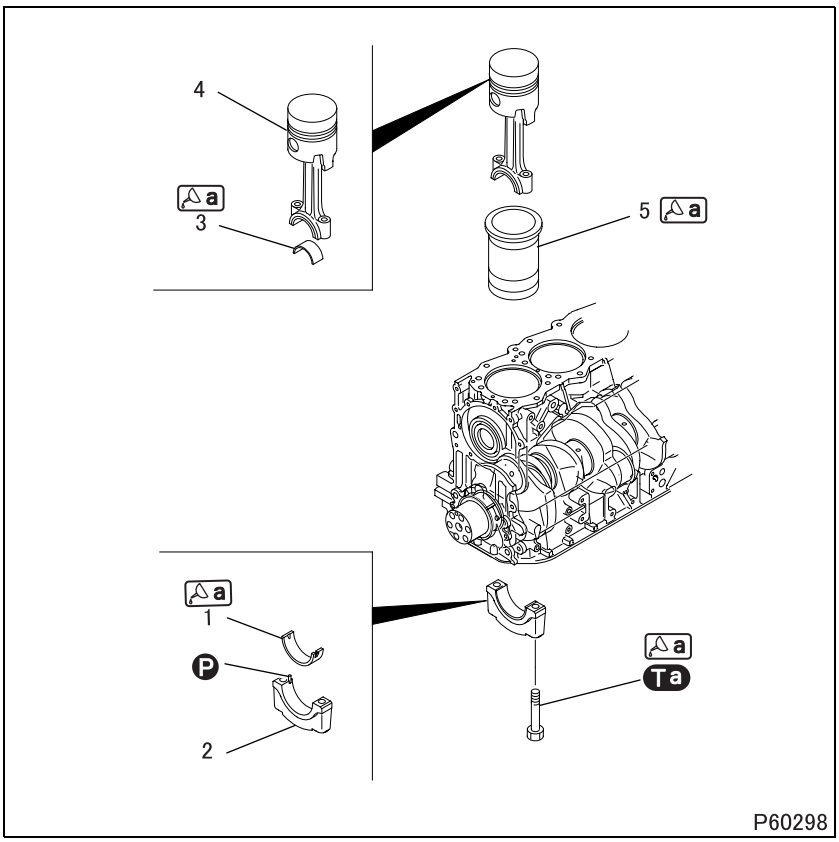

● **Disassembly sequence**

1 Lower connecting rod bearing
2 Connecting rod cap
3 Upper connecting rod bearing
4 Piston and connecting rod (See later sections.)
5 Cylinder liner

Ⓟ: Locating pin

● **Assembly sequence**

Follow the disassembly sequence in reverse.

Service standards (Unit: mm {in.})

Location	Maintenance item		Standard value	Limit	Remedy
–	Piston projection from crankcase top surface		0.75 to 0.96 {0.030 to 0.038}	–	Inspect
–	Connecting rod end play		0.15 to 0.45 {0.0059 to 0.018}	0.6 {0.024}	Inspect
1, 3	Connecting rod bearing	Oil clearance	0.03 to 0.09 {0.0012 to 0.0035}	0.2 {0.0079}	Replace
		Span when free	–	74.5 {2.93}	
4, 5	Piston and connecting rod-to-cylinder liner clearance		0.18 to 0.21 {0.0071 to 0.0083}	–	Replace
5	Cylinder liner	Flange projection	0.03 to 0.10 {0.0012 to 0.0039}	–	Replace
		Bore	ϕ118 to 118.03 {4.646 to 4.647}	ϕ118.25 {4.66}	
		Out of roundness	0.03 {0.0012} or less	–	

Tightening torque (Unit: N·m {ft.lbs, kgf·m})

Mark	Parts to be tightened	Tightening torque	Remarks
Ta	Bolt (connecting rod cap installation)	29 {21, 3.0} + 90° (± 5°)	Wet

Lubricant and/or sealant

Mark	Points of application	Specified lubricant and/or sealant	Quantity
a	Threaded portion of connecting rod bolt	Engine oil	As required
	Inside surface of connecting rod bearing		
	Outside periphery of cylinder liner		

Special tools (Unit: mm {in.})

Mark	Tool name and shape	Part No.	Application
a	Piston guide clamp	MH061760	Installation of piston and connecting rod
b	Piston guide lever 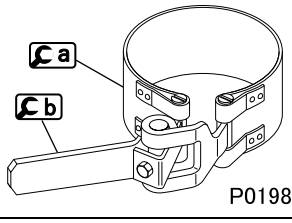 P01981	MH061658	
c	Socket wrench 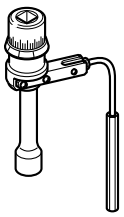 P01984	MH061560	
d	Cylinder liner extractor A: ϕ117.5 {4.63} 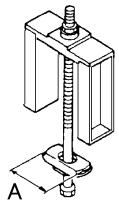 13615	MH061761	Removal of cylinder liner
e	Cylinder liner installer A: ϕ117.5 {4.63} 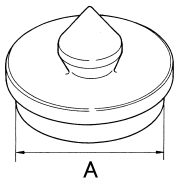 01983	MH061771	Installation of cylinder liner

◆Inspection before removal◆

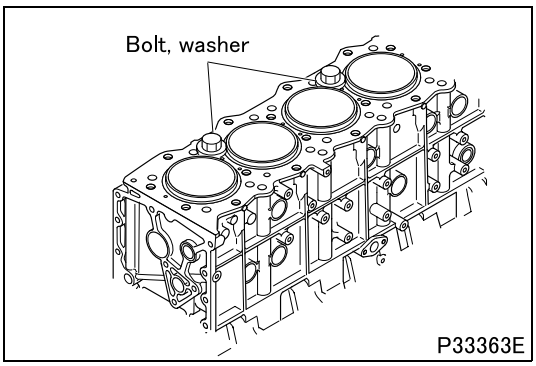

P33363E

■ Retaining cylinder liners

- The cylinder liners may move up when the crankcase is turned over, or the crankshaft is rotated after the pistons are installed. To prevent this, retain the cylinder liners by holding their flanges with bolts and washers.

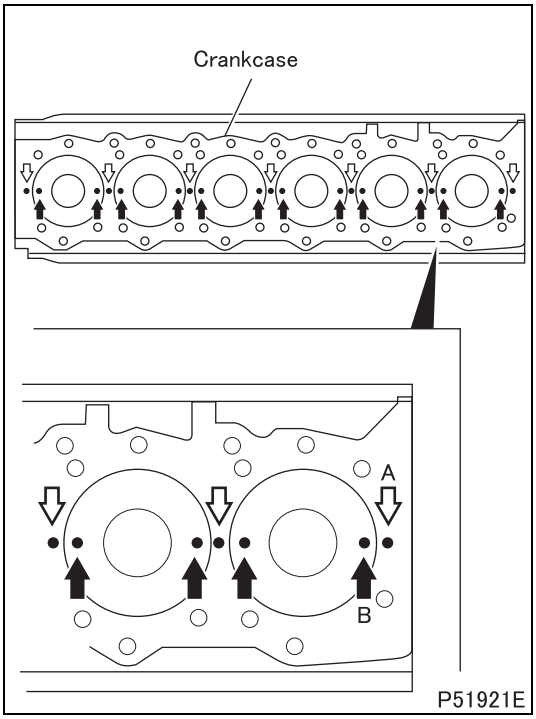

■ **Inspection: Piston projection from crankcase top surface**

CAUTION ⚠

- **The amount of piston projection affects engine performance and must therefore be inspected without fail.**

- Set the piston at the top dead center.
- Mark reference points A (seven points in total) on the top surface of the crankcase as shown in the illustration. Using each of the marks as a zero point, measure the amount of piston projection relative to the zero point (height of measurement point B – height of reference point A).
- Make the measurements at the two measurement points B for each cylinder (twelve points in total) using the reference point A nearest to each measurement point, and calculate the average value of all the measurements.
- If the average value is out of the standard value range, check the clearances between all relevant parts.
- Select and use a cylinder head gasket that can accommodate the average piston projection (average value of the twelve measurements).

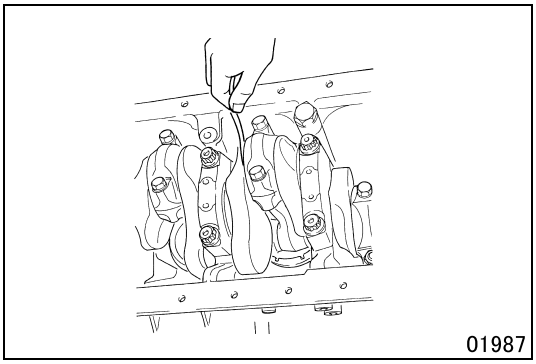

■ **Inspection: Connecting rod end play**

- Measure the end play for every connecting rod.
- If any measurement exceeds the specified limit, replace the defective part(s).

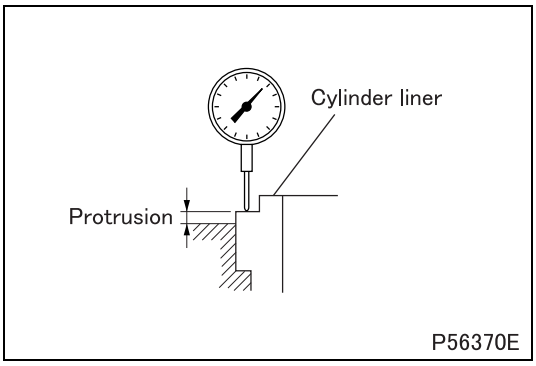

■ **Inspection: Cylinder liner flange projection**

- If the measurement deviates from the standard value, inspect the installation and replace the defective part(s).

CAUTION ⚠

- **If the cylinder liner flange protrusion is less than the specified value, the contact pressure of the cylinder head gasket against the bore of the cylinder will not be high enough to prevent gas leakage.**

◆Inspection procedure◆

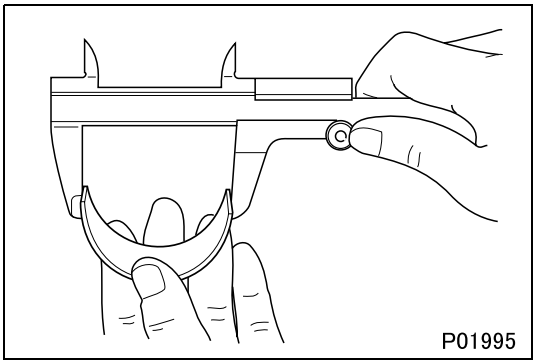

■ **Inspection: Connecting rod bearing span when free**

CAUTION ⚠

- **Do not attempt to manually expand the bearings.**

- If the measurement is less than the limit, replace upper and lower bearings as a set.

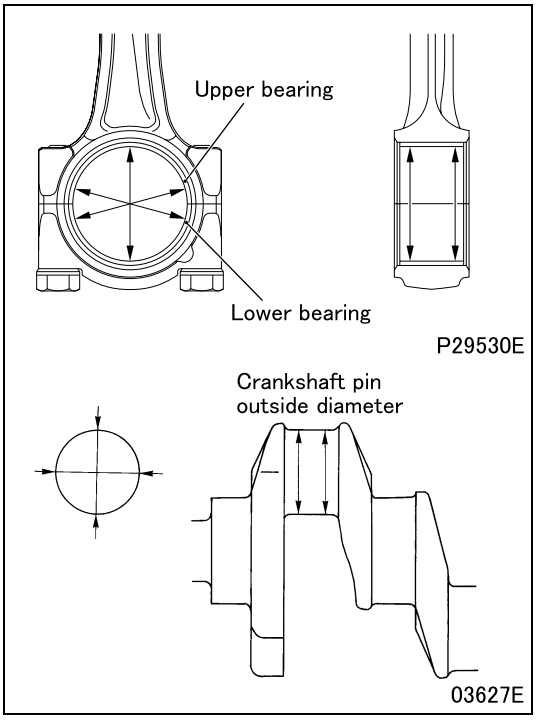

■ **Inspection: Connecting rod bearing-to-crankshaft oil clearance**

- Fit the lower bearing to the connecting rod cap and the upper bearing to the connecting rod, then tighten the nut to a torque of 29 N·m {21 ft.lbs, 3 kgf·m}.
- Measure the inside diameter of the bearing and the outside diameter of the crankshaft pin.
- If the clearance exceeds the limit, replace the defective part(s).
- If a bearing has to be replaced with an undersized one, machine the crankshaft pin to the specified undersize diameter.

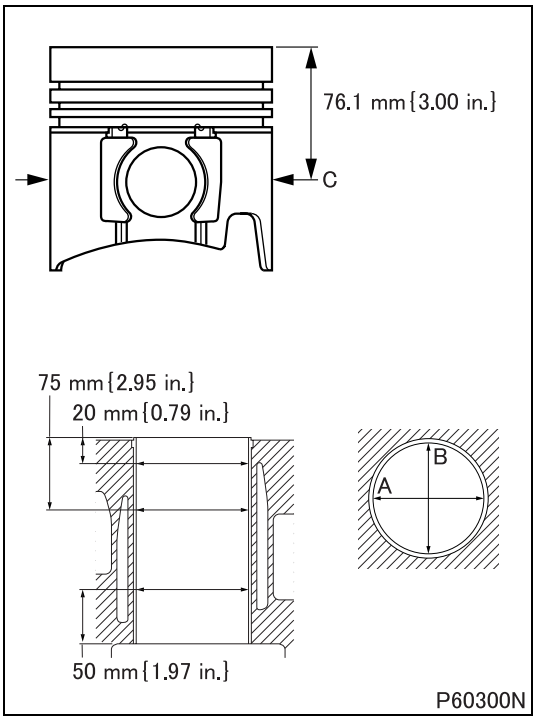

■ **Inspection: Clearance between piston and cylinder sleeve**

- If the measurement deviates from the standard value, replace the defective part(s).
  A: Measuring point on the crankcase (in direction of the crankcase axis).
  B: Measuring point on the crankcase (vertical to the crankcase axis).
  C: Measuring point on the piston outer diameter (vertical to the piston pin hole).

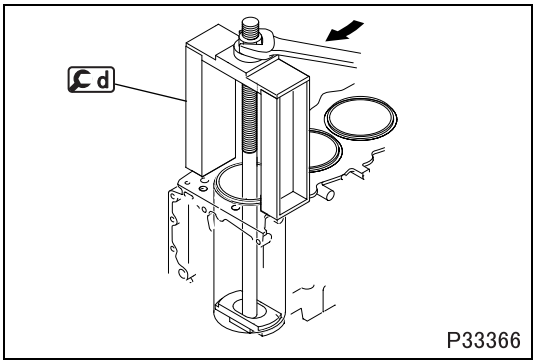

Replacement of cylinder liner

[Removal]

CAUTION ⚠

- **If the cylinder liners will need to be reused for some reason or other, make countermarks to ensure correct reassembly.**

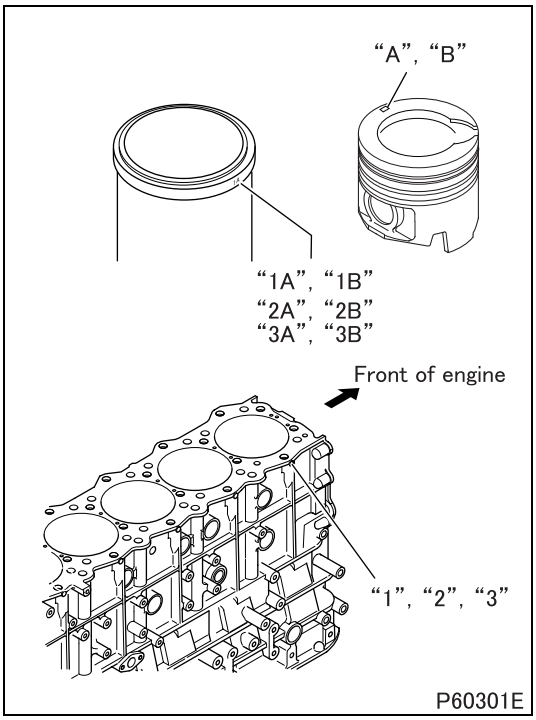

[Installation]

- When replacing cylinder liners, select the cylinder liners which correspond to the size marks on the crankcase and the piston.

Size mark on crankcase	Size mark on cylinder liner	Size mark on piston
"1"	"1A"	"A"
	"1B"	
"2"	"2A"	
	"2B"	"B"
"3"	"3A"	
	"3B"	

CAUTION ⚠

- **Make sure to use pistons and cylinder liners of the same size. Failure to do may result in seizures in the engine.**

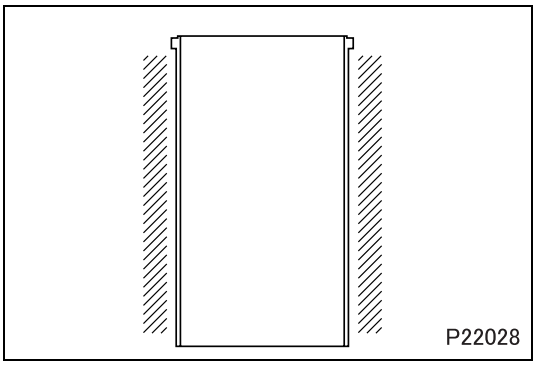

- Apply a thin coat of engine oil onto the outside periphery (hatched area) of the cylinder liner.

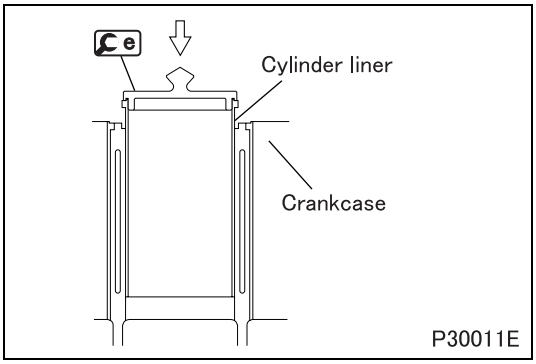

- While pushing the top surface of e evenly with hands, gently insert the cylinder liner into the crankcase.

CAUTION ⚠

- **Cylinder liners are thinly structured. Therefore, they must be handled with extreme care.**

◆Installation procedure◆

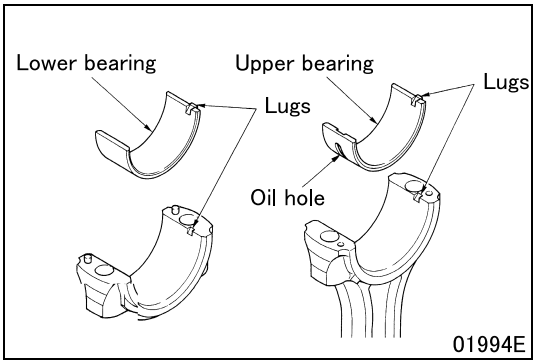

■ Installation: Connecting rod bearings

CAUTION ⚠

- **Do not reverse the positions of the lower bearing and the upper bearing (with oil hole) when installing, as this may cause seizure in the engine.**

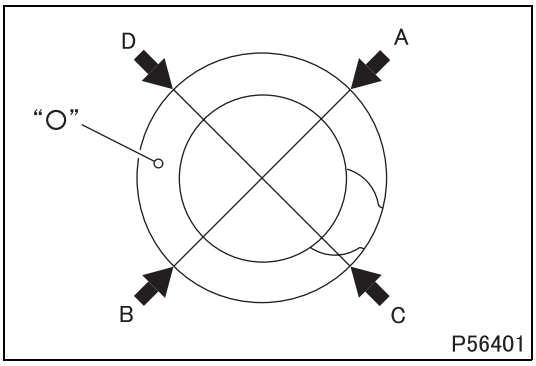

■ Installation: Piston and connecting rod

- Check that the piston ring end gaps are in their correct positions.
  A: 1st compression ring gap
  B: 2nd compression ring gap
  C: Oil ring gap
  D: Oil ring expander spring gap

"O": Front mark on piston

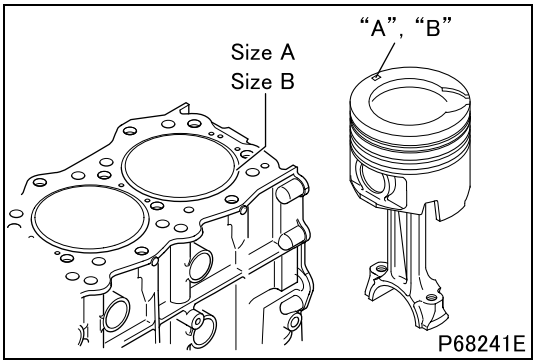

- Ensure that the size mark ("A", "B") on the piston is the same as that on the cylinder liner.
- Install the piston and connecting rod, taking care not to damage the inside surface of the cylinder liner or the crank pin with the connecting rod.

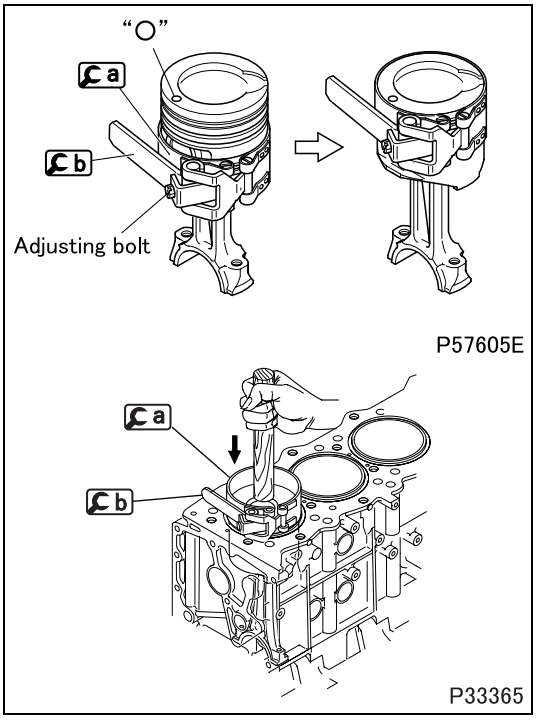

- Face the front mark "○" of the piston toward the front of the engine.
- With a and b installed around the piston skirt, tighten the adjusting bolt of b until the inside diameter of a matches the outside diameter of the piston skirt.
- Remove a and b from the piston. Apply engine oil to the following areas. Then, install a and b over the rings of the piston.
  - Outside surface of piston
  - Inside surface of a
  - Cylinder liner inside surface

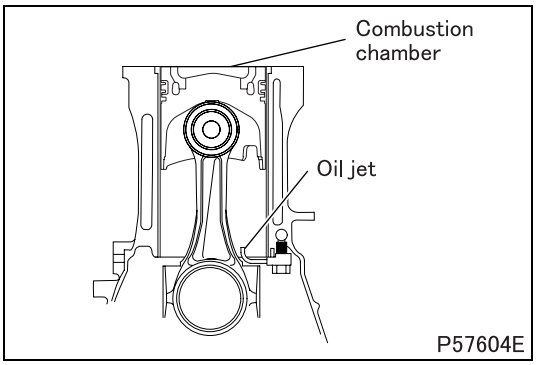

CAUTION ⚠

- **Be careful not to scratch or damage head of the piston (a part of the combustion chamber).**
- **Make sure that the connecting rod does not hit oil jet.**

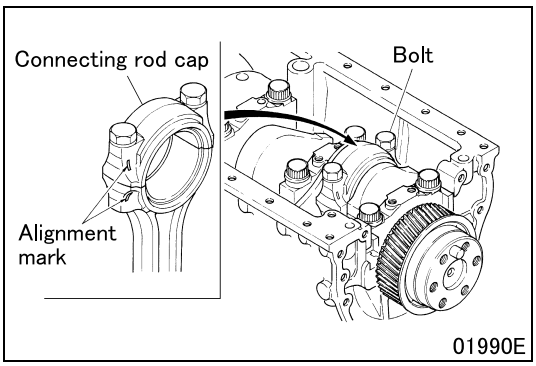

- After the piston and connecting rod have been installed, install the connecting rod cap onto the connecting rod, ensuring that the alignment marks are aligned. Tighten the bolts alternately as follows.
  - Tighten the bolts to a torque of 29 N·m {21 ft.lbs, 3 kgf·m}.
  - Further tighten the bolts in the following sequence.

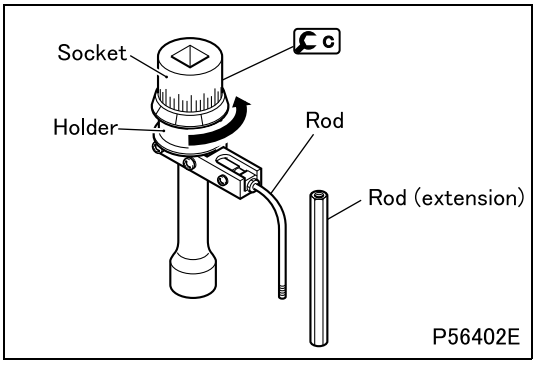

- Turn the holder of c counterclockwise to preload the built-in spring.

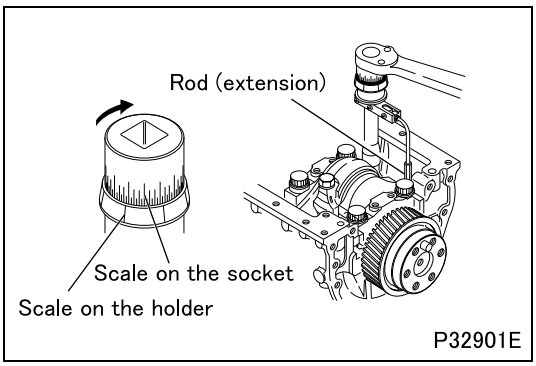

- Set [C] such that the rod (extension) is pressed against the crankshaft by the force of the spring.
- Align any line on the holder scale with any line on the socket scale. (This will be used as the reference point = 0°.)
- From the reference point, turn the socket by 90° ± 5° in the direction shown. Each division on the socket scale represents 5°.
- With the connecting rod cap installed, check the following items.
  - Connecting rod end play
  - Piston protrusion

PISTON AND CONNECTING ROD, CYLINDER LINER

Piston and Connecting Rod

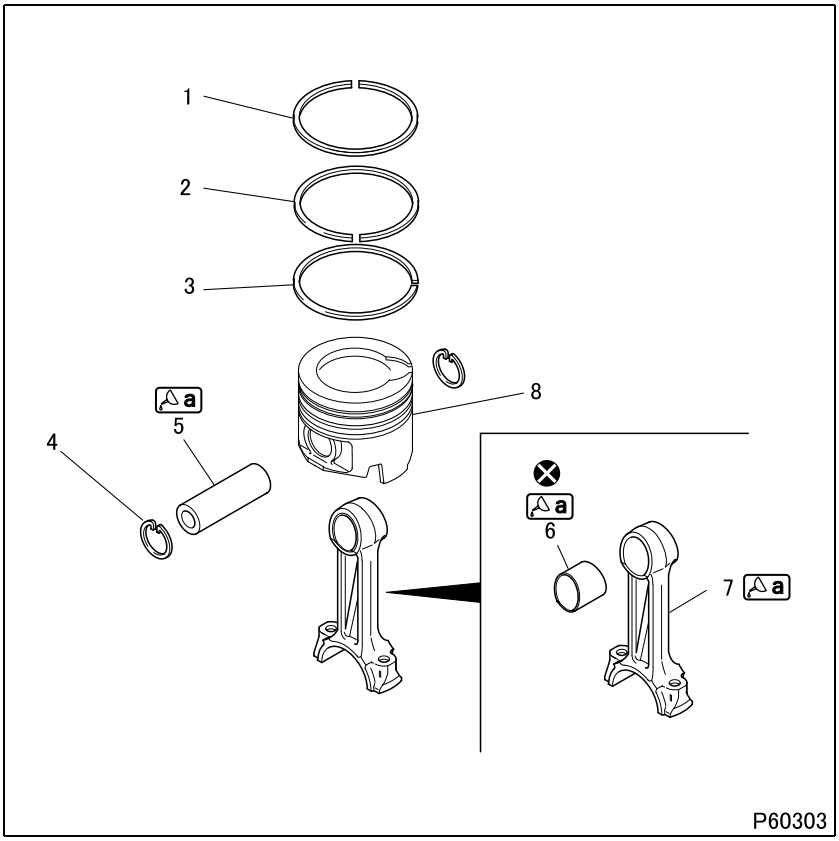

● **Disassembly sequence**

1 1st compression ring
2 2nd compression ring
3 Oil ring
4 Snap ring
5 Piston pin
6 Connecting rod bushing
7 Connecting rod
8 Piston

⊗: Non-reusable parts

● **Assembly sequence**

Follow the disassembly sequence in reverse.

Service standards (Unit: mm {in.})

Location	Maintenance item		Standard value	Limit	Remedy
1 to 3	Piston ring end gap	1st compression ring	$0.45\ ^{+0.05}_{-0.10}$ {$0.018\ ^{+0.0020}_{-0.0039}$}	1.5 {0.059}	Replace
		2nd compression ring			
		Oil ring	0.30 to 0.55 {0.012 to 0.022}		
1 to 3, 8	Piston ring side clearance in piston groove	1st compression ring	0.13 to 0.18 {0.0051 to 0.0071}	0.2 {0.0079}	Replace
		2nd compression ring	0.065 to 0.105 {0.0026 to 0.0041}	0.15 {0.059}	
		Oil ring	0.025 to 0.065 {0.00098 to 0.0026}		
5, 6	Piston pin-to-connecting rod bushing clearance		0.02 to 0.05 {0.00079 to 0.0020}	0.1 {0.0039}	Replace
5, 8	Piston pin-to-piston clearance		0.004 to 0.022 {0.00016 to 0.000079}	0.05 {0.0020}	Replace
7	Connecting rod	Bend	–	0.05 {0.0020}	Replace
		Twist	–	0.1 {0.0039}	

Lubricant and/or sealant

Mark	Points of application	Specified lubricant and/or sealant	Quantity
a	Piston pin outside surface	Engine oil	As required
	Connecting rod bushing outside surface		
	Connecting rod bushing fitting surface of connecting rod		

Special tools

Mark	Tool name and shape	Part No.	Application
a	Piston ring tool 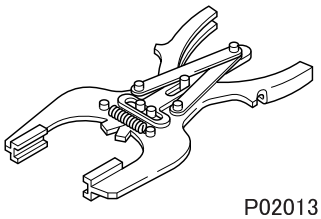 P02013	30091-07100	Removal and installation of piston rings
b	Connecting rod bushing puller kit 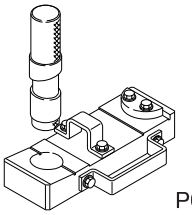 P02015	MH062556	Removal and installation of connecting rod bushings

◆Removal procedure◆

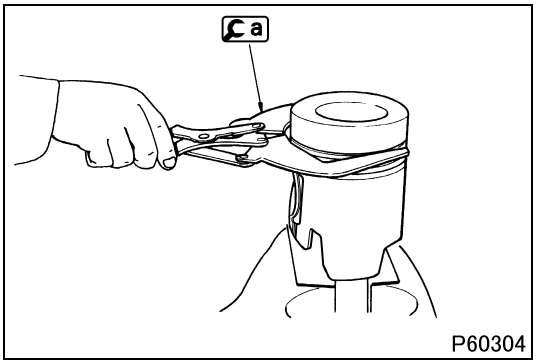

P60304

■ **Removal: Piston ring**

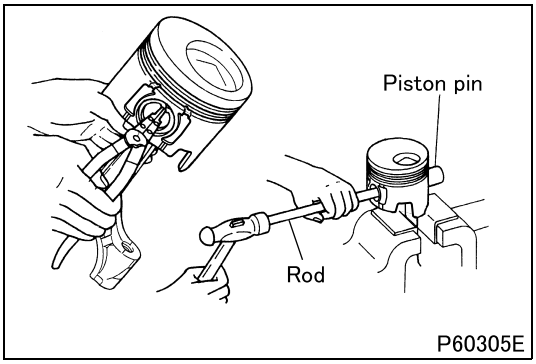

P60305E

■ **Removal: Piston pin**

- Remove the piston pin by striking it with a rod and hammer.
- If the piston pin is difficult to remove, first heat the piston in hot water or with a piston heater.

◆Inspection procedure◆

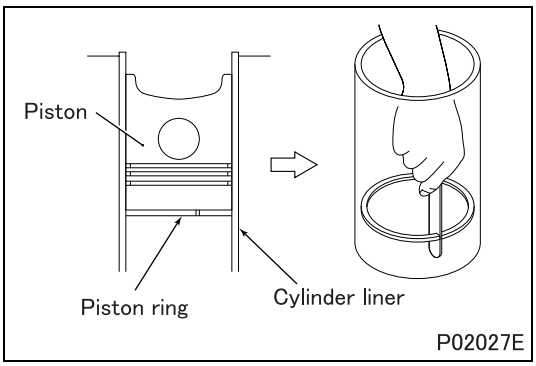

P02027E

■ **Inspection: Piston ring end gap**

- Using the crown of a piston, push the piston ring horizontally into a cylinder in the crankcase until it reaches the lower part of the cylinder liner, where there is relatively small wear.
- Taking care not to move the piston ring, measure the end gap.
- If any of the rings has a gap exceeding the specified limit, replace all the piston rings as a set.

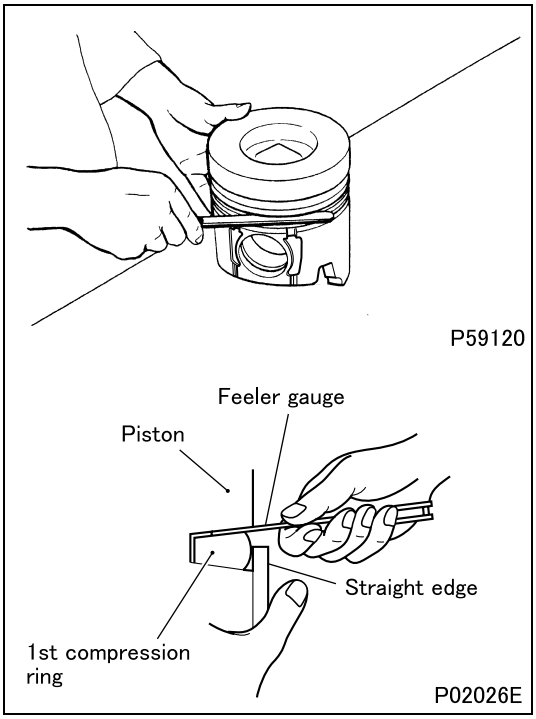

■ **Inspection: Piston ring side clearance in piston groove**

- Remove any carbon deposits from the ring groove in the piston.
- Measure the side clearance of each ring around the piston's entire periphery.
- If any of the measurements exceeds the specified limit, replace the defective part(s). If any of the piston rings is defective, replace all the rings on the piston as a set.
- The side clearance of the 1st compression ring must be measured using a feeler gauge while holding the ring against the piston ring groove with a straight edge.

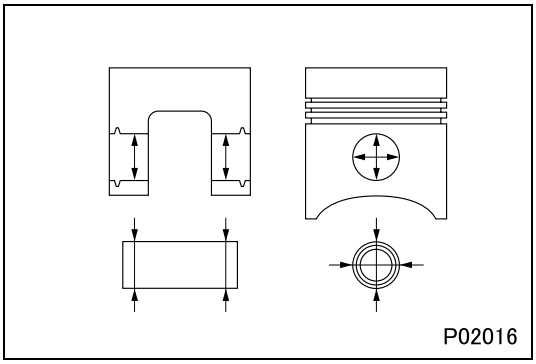

■ **Inspection: Piston pin-to-piston clearance**

- If the measurement exceeds the specified limit, replace the defective part(s).

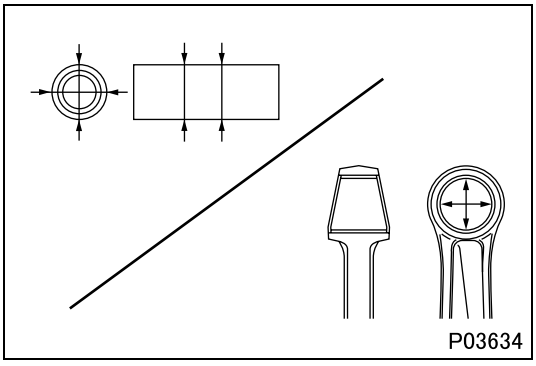

■ **Inspection: Piston pin-to-connecting rod bushing clearance**

- If any of the measurements exceeds the specified limit, replace the bushing.

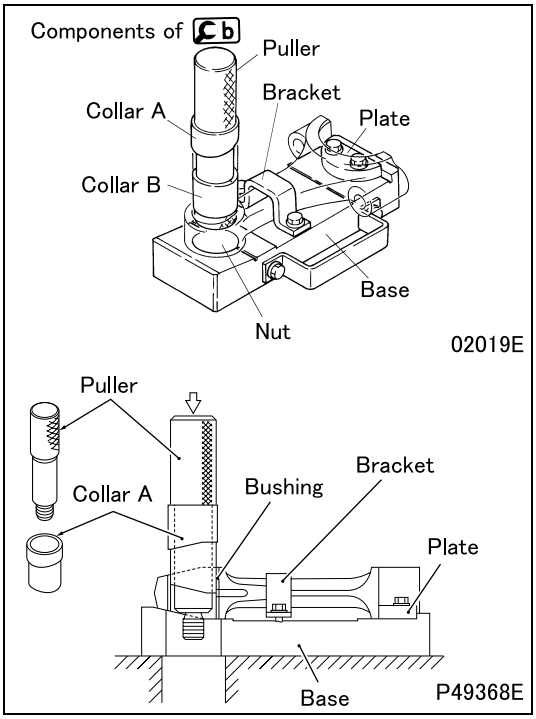

Replacement of connecting rod bushing

- Replace the connecting rod bushing using b.

[Removal]

- Remove the upper bearing (if fitted) from the large end of the connecting rod.
- Mount the connecting rod on the base and lock it in position with the bracket and plate.
- Fit collar A over the puller with its ends facing in the illustrated directions. Then, slowly apply a pressure of approximately 49 kN {11020 lbs, 5,000 kgf} to the puller with a press to force out the connecting rod bushing.

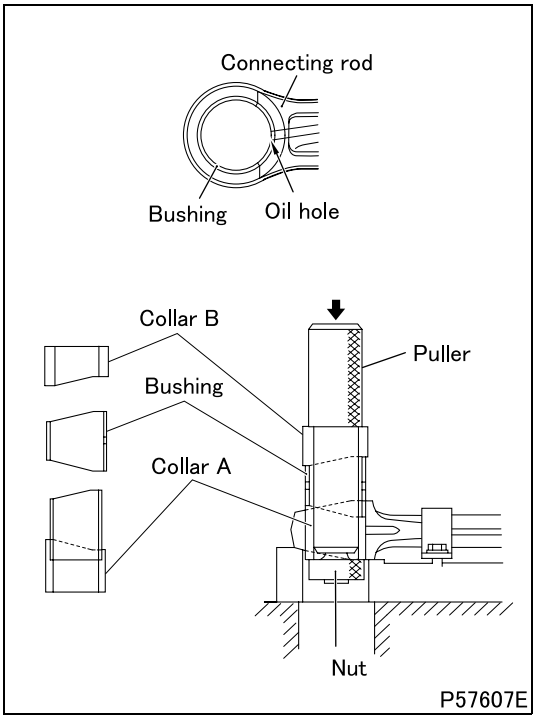

[Installation]

- Apply engine oil to the outside surface of the connecting rod bushing and the bushing fitting surface of the connecting rod.
- Fit collar B, the bushing, and collar A over the puller in the illustrated directions and lock this arrangement together with the nut.
- Align the oil holes in the connecting rod bushing and the connecting rod. Then, use a press to slowly apply a pressure of approximately 49 kN {11020 lbs, 5,000 kgf} to the puller until the bushing is forced into place.
- After press-fitting the connecting rod bushing, measure the clearance between the piston pin and connecting rod bushing.
- If the measurement is less than the standard clearance range, ream the bushing.

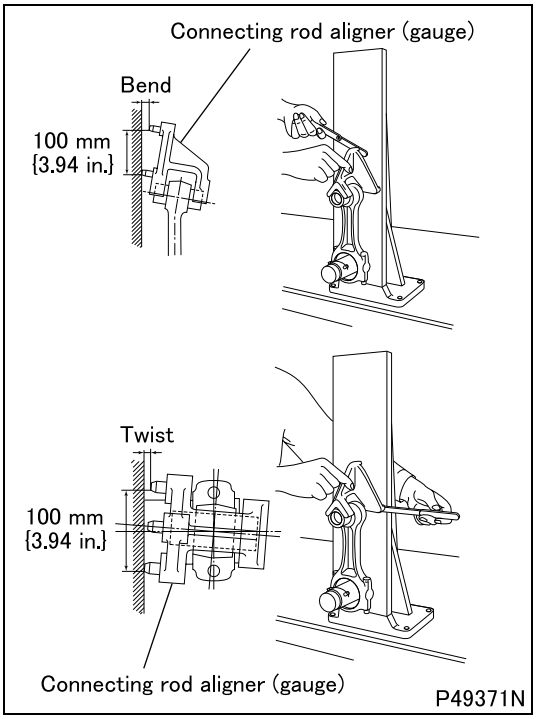

■ **Inspection: Connecting rod bend and twist**

- Mount the connecting rod on the connecting rod aligner. Also mount the connecting rod bearings, piston pin, and connecting rod cap to create the same conditions as are expected when the connecting rod is mounted on a crankshaft. Tighten the nuts of the connecting rod bearing cap to a torque of 29 N·m {21 ft.lbs, 3 kgf·m}.
- Measure the extent of bend and twist in the connecting rod.
- If either measurement exceeds the specified limit, replace the connecting rod.

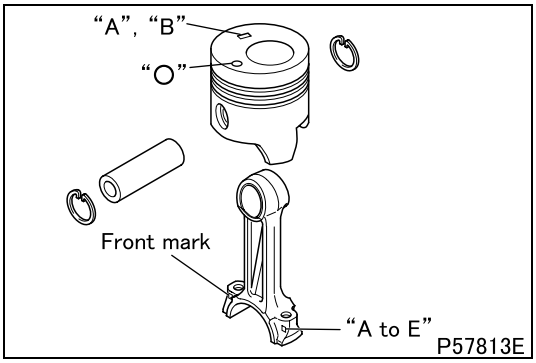

■ **Installation: Piston to connecting rod**

- Install pistons and connecting rods as follows when replacing them.
  - All connecting rods used in the same engine must be of the same weight size mark.
    Weight mark: "A" to "E"
  - Apply engine oil to the piston pin, and assemble the piston and connecting rod with their marks facing in the illustrated directions.

  "O": Front mark
  - If the piston pin is difficult to insert, heat the piston in hot water or with a piston heater.

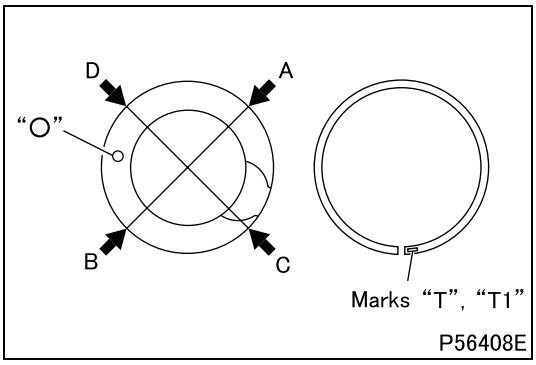

■ **Installation: Piston rings**

- With the manufacturer's marks (found near the piston ring end gaps) facing up, install the piston rings so that the end gap of each ring is positioned as illustrated.
  A: 1st compression ring end gap
  B: 2nd compression ring end gap
  C: Oil ring end gap
  D: Oil ring's expander spring end gap

"O": Front mark on piston
The manufacturer's marks are present only on the 1st ("T") and 2nd ("T1") compression rings.

M E M O

FLYWHEEL <MANUAL TRANSMISSION>

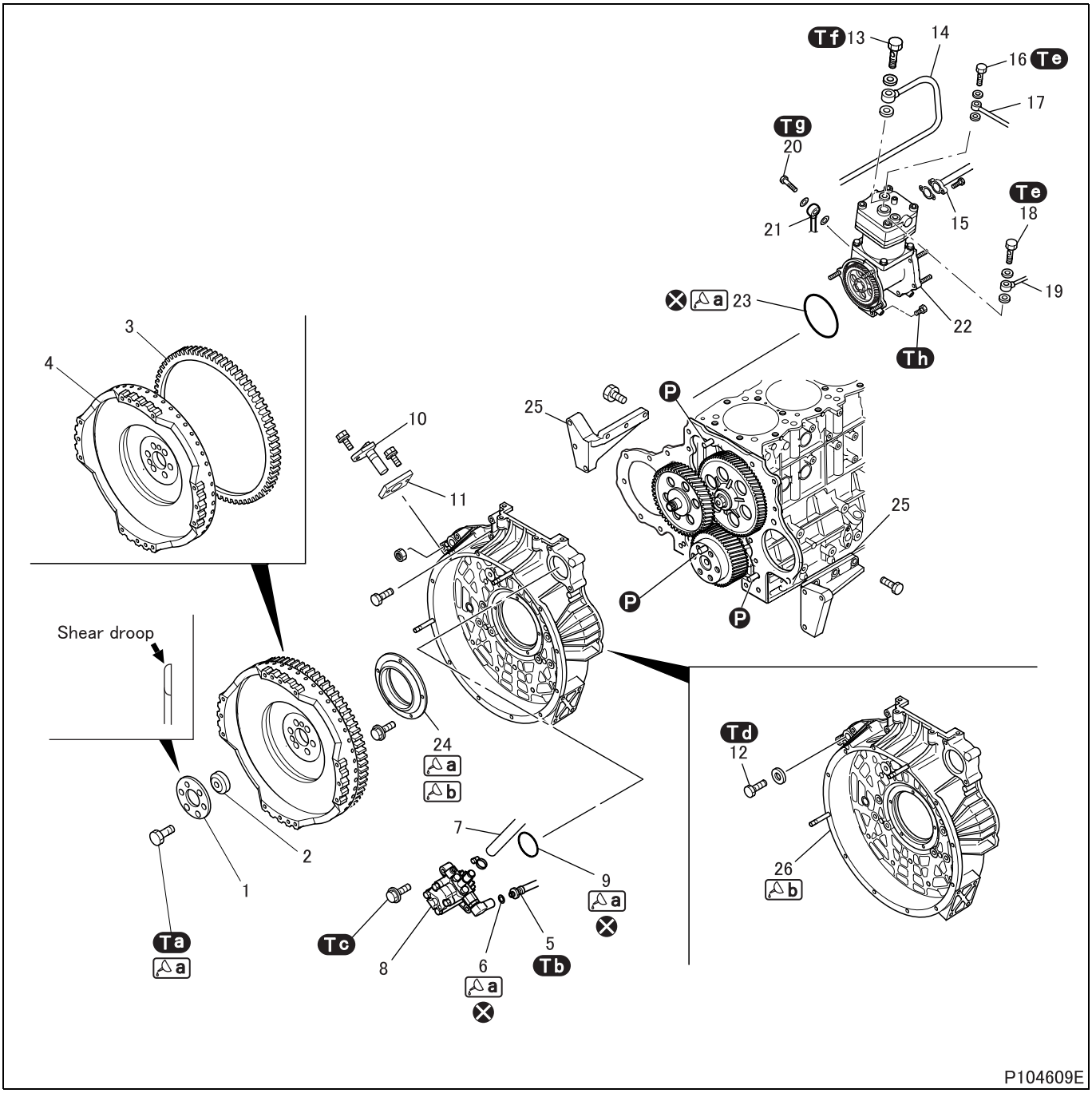

● **Disassembly sequence**

1 Washer plate
2 Pilot bearing
3 Ring gear
4 Flywheel
5 Power steering oil hose
6 O-ring
7 Suction hose
8 Power steering oil pump (See Gr37.)
9 O-ring
10 Engine speed sensor
11 Adapter
12 Plug
13 Eyebolt
14 Air outlet pipe
15 Air suction pipe
16 Eyebolt
17 Water pipe
18 Eyebolt
19 Water pipe
20 Eyebolt
21 Oil pipe
22 Air compressor
23 O-ring
24 Rear oil seal
25 Stiffener <Engine with stiffener>
26 Flywheel housing

Ⓟ: Locating pin
⊗: Non-reusable parts

● **Assembly sequence**

Follow the disassembly sequence in reverse.

Service standards

Location	Maintenance item		Standard value	Limit	Remedy
–	Eccentricity of flywheel housing measured at spigot joint section (when fitted)		–	0.2 {0.0079}	Inspect or replace
4	Flywheel	Friction surface distortion	0.05 {0.0020} or less	0.2 {0.0079}	Correct or replace
		Friction surface height	26.5 {1.04}	25.5 {1.00}	Replace
		Friction surface runout (when fitted)	0.05 {0.0020} or less	0.2 {0.0079}	Correct or replace
		Friction surface parallelism	0.1 {0.0039} or less	–	

Tightening torque (Unit: N·m {ft.lbs, kgf·m})

Mark	Parts to be tightened		Tightening torque	Remarks
Ta	Bolt (flywheel mounting)		100 {74, 10} + 150° $^{+10°}_{0°}$	• Wet • Can be reused up to 3 times
Tb	Power steering oil hose		69 to 82 {51 to 60, 7.0 to 8.4}	–
Tc	Bolt (power steering oil pump mounting)		44 ± 8.8 {32 ± 6.5, 4.5 ± 0.9}	–
Td	Plug		90 {66, 9}	–
Te	Eyebolt (water pipe mounting)		39 {29, 4.0}	–
Tf	Eyebolt (air outlet pipe mounting)		100 {74, 10}	–
Tg	Eyebolt (oil pipe mounting)		21 {15, 2.1}	–
Th	Bolt (air compressor mounting)	M10 × 20	35 to 40 {26 to 30, 3.6 to 4.1}	–
		M10 × 40	50 to 60 {37 to 44, 5.1 to 6.1}	–

Lubricant and/or sealant

Mark	Points of application	Specified lubricant and/or sealant	Quantity
a	Thread of bolts	Engine oil	As required
	O-ring		
	Rear oil seal lip		
b	Rear oil seal surface to be mated with flywheel housing	ThreeBond 1207C	As required
	Engine mounting surface of flywheel housing		

Special tools

Mark	Tool name and shape	Part No.	Application
a	Socket wrench 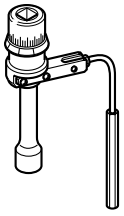 P01984	MH062354	Installation of flywheel
b	Magnet base 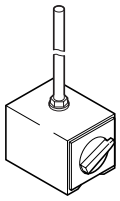 P00471	MH062356	

◆Inspection before removal◆

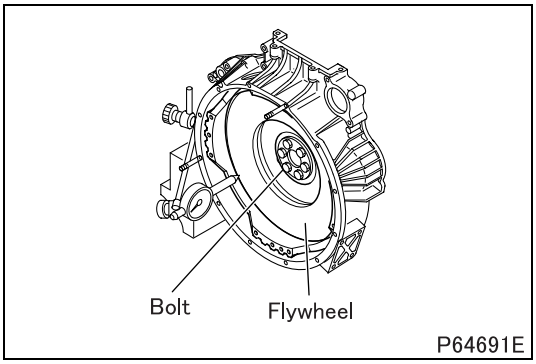

P64691E

■ **Inspection: Flywheel friction surface runout when fitted**

- If the measurement exceeds the limit, check if the bolts are correctly tightened as well as the crankshaft mounting surface. Correct or replace the flywheel as required.

◆Removal procedure◆

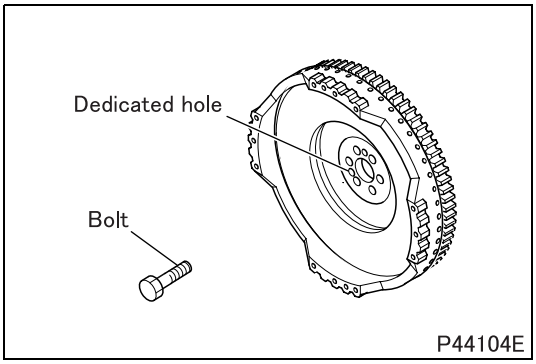

P44104E

■ **Removal: Flywheel**

- To remove the flywheel, use bolts inserted into the dedicated holes in the flywheel.

■ **Removal: Ring gear**

- Heat the ring gear evenly with a gas burner or the like until it reaches approximately 200°C {390°F}, then remove it from the flywheel.

WARNING ⚠

- **You may burn yourself if you touch the heated ring gear.**

◆Inspection procedure◆

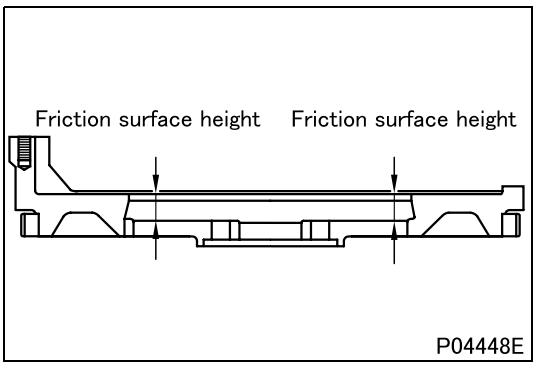

■ **Inspection: Flywheel**

(1) Friction surface height

- If the height is less than the limit, replace the flywheel.

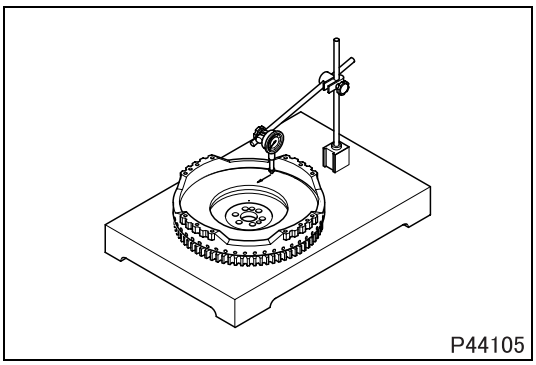

(2) Friction surface distortion

- If the measurement exceeds the limit, rectify or replace the flywheel.

NOTE

- **If the ring gear is evidently defective, replace the ring gear before inspecting the friction surface for distortion.**

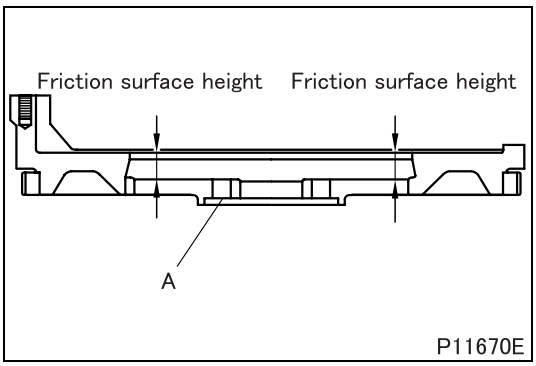

Rectification of friction surface

- Rectify the friction surface so that its height is not below the specified limit, and it is parallel with surface A within specification.

◆Installation procedure◆

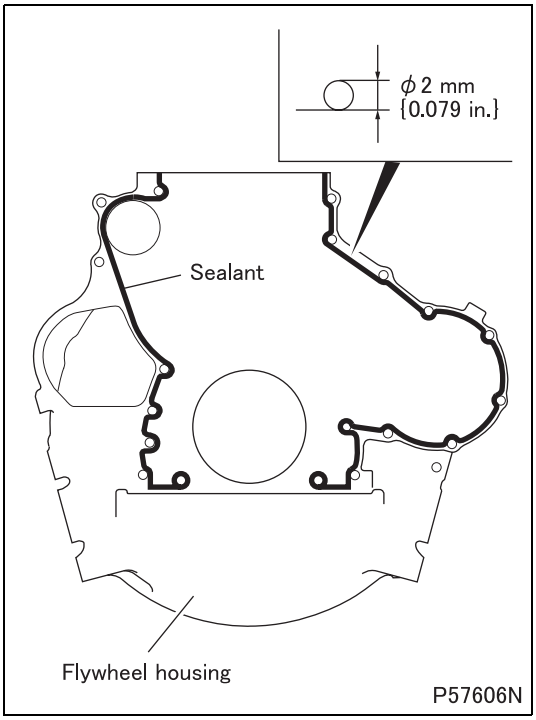

■ **Installation: Flywheel housing**

[Installation]

- Apply an even and continuous bead of sealant onto the flywheel housing surface where the crankcase is to be mounted.
- Install the flywheel housing onto the crankcase within 3 minutes following the application.

CAUTION ⚠

- **Clean the flywheel housing surface where sealant is to be applied.**
- **When installing the flywheel housing, take care not to spread the sealant beyond the application area.**
- **Do not start the engine at least for an hour after the flywheel housing has been installed.**
- **If the flywheel housing mounting bolts are subsequently loosened, be sure to apply sealant again upon reassembly.**

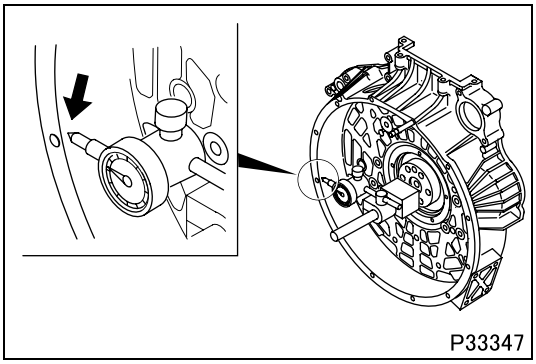

[Inspection]

- While turning the crankshaft, measure the flywheel housing for any eccentricity at the location indicated in the illustration.
- If the eccentricity exceeds the limit, reassemble the flywheel.
- If the eccentricity still exceeds the limit after reassembly, replace the defective part(s).

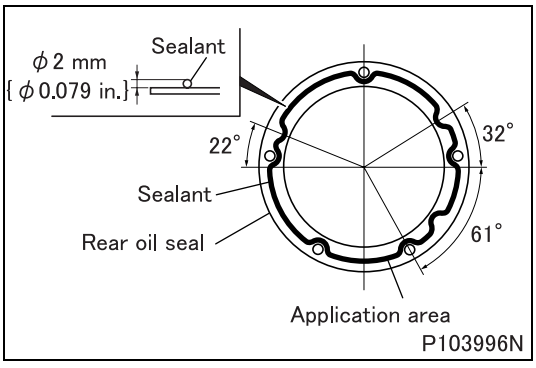

■ **Installation: Rear oil seal**

- Apply an even and continuous bead of sealant on the rear oil seal as shown in the illustration.
- Install the rear oil seal onto the flywheel housing within 3 minutes following the application.

CAUTION ⚠

- **Clean the rear oil seal surface where sealant is to be applied.**
- **When installing the rear oil seal, take care not to spread the sealant beyond the application area.**
- **Do not start the engine at least for an hour after the rear oil seal has been installed.**
- **If the rear oil seal mounting bolts are subsequently loosened, be sure to apply sealant again upon reassembly.**

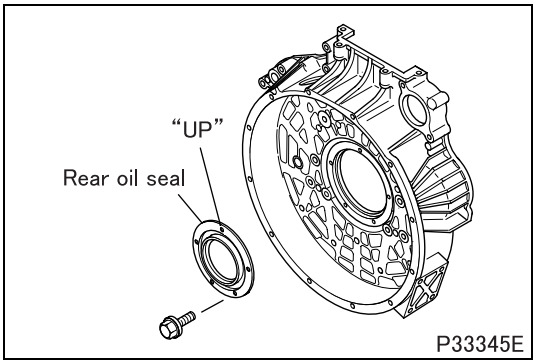

- Apply engine oil to the rear oil seal lip.
- Install the rear oil seal onto the flywheel housing ensuring that the seal is faced in the illustrated direction.

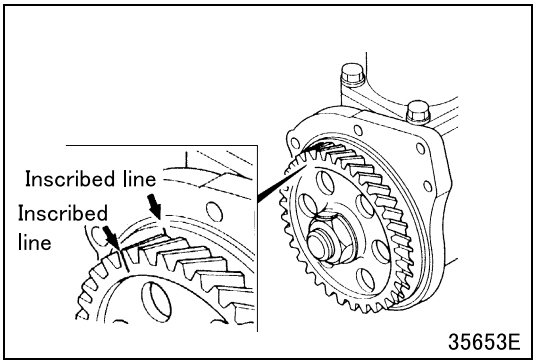

■ Installation: Air compressor

- Bring the No. 1 cylinder of the engine to top dead center of the compression stroke.
- After aligning inscribed lines with each other, install the air compressor to the flywheel housing.

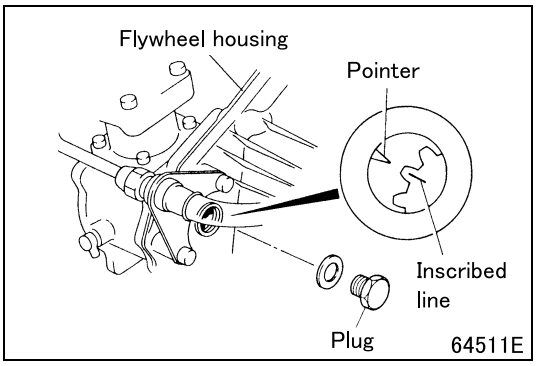

- Remove the inspection plug and check if the inscribed line is aligned with the pointer.
- If not aligned, remove and refit the air compressor.

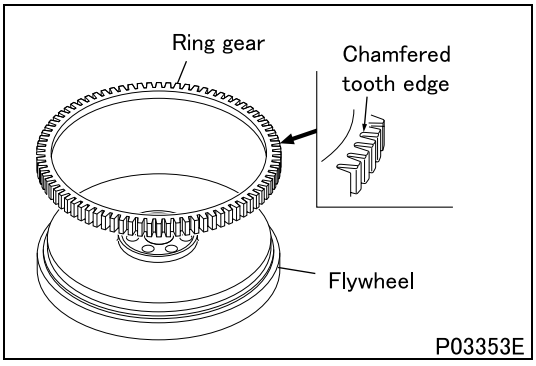

■ Installation: Ring gear

- Heat the ring gear evenly with a gas burner or the like until it reaches approximately 200°C {390°F}.

WARNING ⚠

- **You may burn yourself if you touch the heated ring gear.**

- Fit the ring gear with the side having non-chamfered tooth edges toward the flywheel.

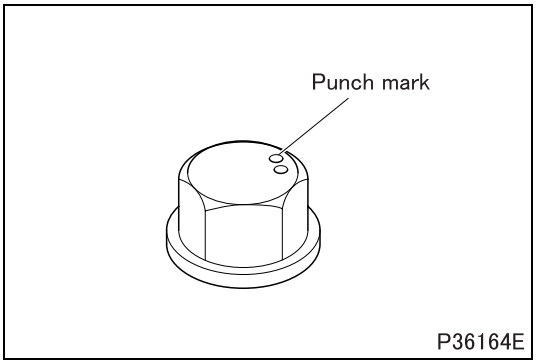

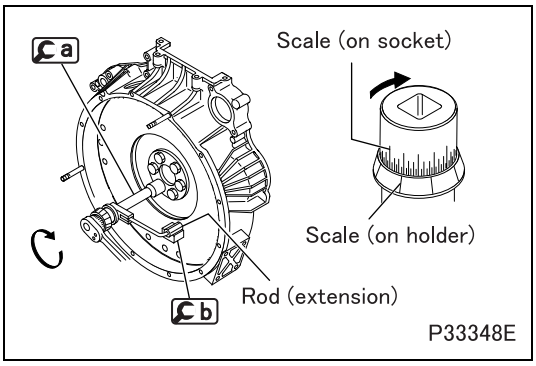

■ **Installation: Flywheel**

CAUTION ⚠

- **Before installing a bolt, check the number of punch marks on the bolt head. (Bolts with up to two punch marks can be reused.)**
  The number of punch marks indicates the number of times the bolt has been tightened in the past within the plastic region. If there are three punch marks (tightened three times in the past), replace the bolt.

- Tighten the flywheel mounting bolts to a torque of 98 N·m {72 ft.lbs, 10 kgf·m}.
- Further tighten the bolts in the following procedure.
  - Turn the holder of [a] counterclockwise to preload the built-in spring.
  - Set [a] such that the rod (extension) is pressed against [b] by the force of the spring.
  - Align any line on the holder scale with any line on the socket scale. (This will be used as the reference point = 0°.)
  - From the reference point, turn the socket by $150^{\circ}\ ^{+10^{\circ}}_{0^{\circ}}$ clockwise. Each division on the socket scale represents 5°.
  - After tightening the bolt within the plastic region, make a punch mark on the bolt head for subsequent identification.

CAUTION ⚠

- **The bolts should be tightened within the plastic region. Never tighten them further than the specified angle.**

M E M O

FLYWHEEL <AUTOMATIC TRANSMISSION>

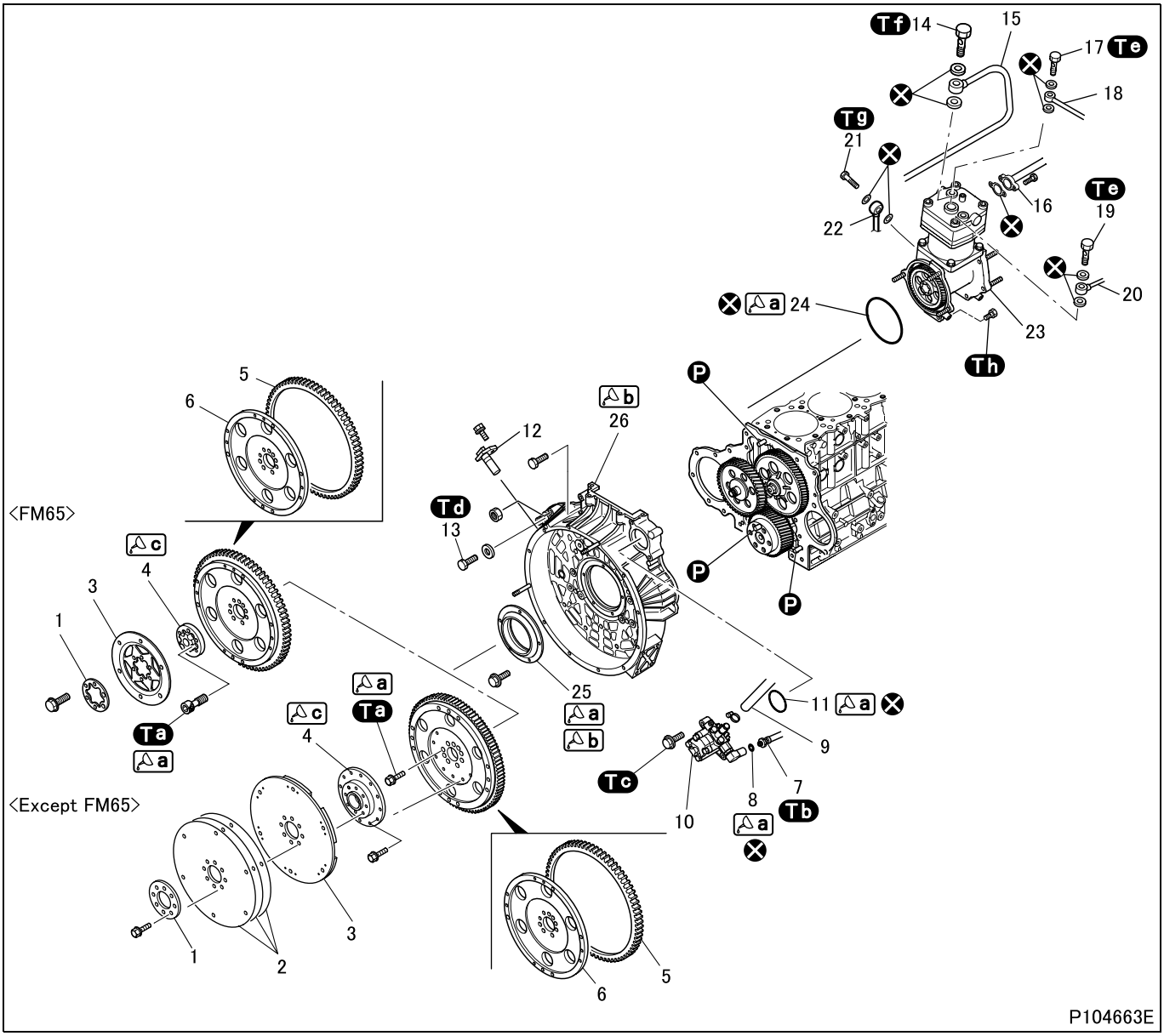

● **Disassembly sequence**

1 Wear plate
2 Drive plate <Except FM65>
3 Flexplate
4 Adapter
5 Ring gear
6 Flywheel
7 Power steering oil hose
8 O-ring
9 Suction hose
10 Power steering oil pump (See Gr37.)
11 O-ring
12 Engine speed sensor
13 Plug
14 Eyebolt
15 Air outlet pipe
16 Air suction pipe
17 Eyebolt
18 Water pipe
19 Eyebolt
20 Water pipe
21 Eyebolt
22 Oil pipe
23 Air compressor (See Gr35A.)
24 O-ring
25 Rear oil seal
26 Flywheel housing

Ⓟ: Locating pin
⊗: Non-reusable parts

● **Assembly sequence**

Follow the disassembly sequence in reverse.

Service standards (Unit: mm {in.})

Location	Maintenance item	Standard value	Limit	Remedy
26	Eccentricity of flywheel housing measured at spigot joint section (when fitted)	–	0.2 {0.0079}	Inspect

Tightening torque (Unit: N·m {ft.lbs, kgf·m})

Mark	Parts to be tightened		Tightening torque	Remarks
Ta	Bolt (flywheel mounting)		255 {188, 26}	Wet
Tb	Power steering oil hose		69 to 82 {51 to 60, 7.0 to 8.4}	–
Tc	Bolt (power steering oil pump mounting)		44 ± 8.8 {32 ± 6.5, 4.5 ± 0.9}	–
Td	Plug		88 {65, 9}	–
Te	Eyebolt (water pipe mounting)		39 {29, 4.0}	–
Tf	Eyebolt (air outlet pipe mounting)		100 {74, 10}	–
Tg	Eyebolt (oil pipe mounting)		21 {15, 2.1}	–
Th	Bolt (air compressor mounting)	M10 × 20	35 to 40 {26 to 30, 3.6 to 4.1}	–
		M10 × 40	50 to 60 {37 to 44, 5.1 to 6.1}	

Lubricant and/or sealant

Mark	Points of application	Specified lubricant and/or sealant	Quantity
a	Thread of bolts	Engine oil	As required
	O-ring		
	Rear oil seal lip		
b	Rear oil seal surface to be mated with flywheel housing	ThreeBond 1207C	As required
	Engine mounting surface of flywheel housing		
c	Torque converter pilot portion of adapter	Molybdenum disulfide grease	As required

◆Removal procedure◆

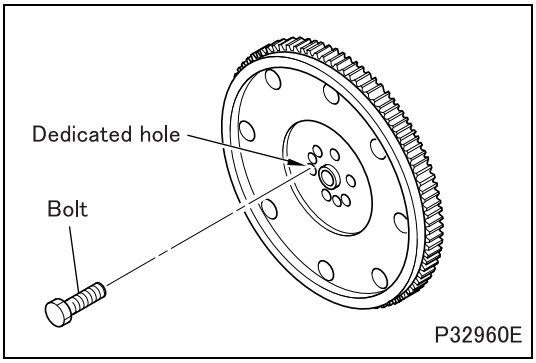

■ Removal: Flywheel

- To remove the flywheel, use bolts inserted into the dedicated holes in the flywheel.

■ Removal: Ring gear

- Heat the ring gear evenly with a gas burner or the like until it reaches approximately 200°C {390°F}, then remove it from the flywheel.

WARNING ⚠

- **You may burn yourself if you touch the heated ring gear.**

◆Installation procedure◆

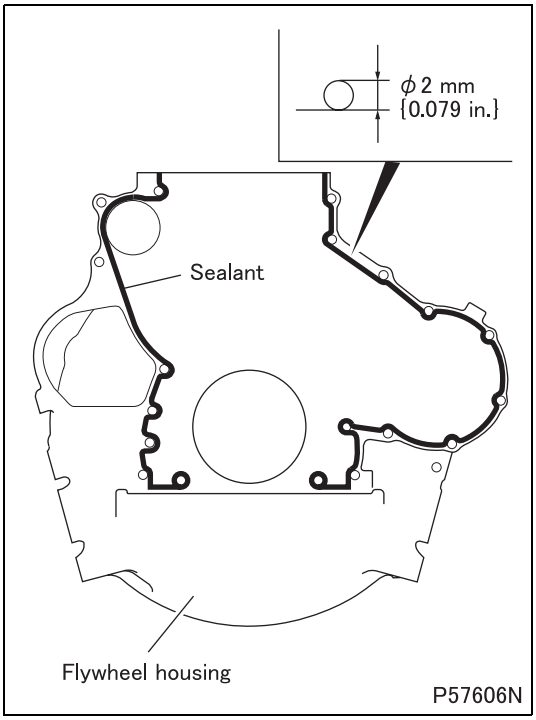

■Installation: Flywheel housing

[Installation]

- Apply an even and continuous bead of sealant onto the flywheel housing surface where the crankcase is to be mounted.
- Install the flywheel housing onto the crankcase within 3 minutes following the application.

CAUTION ⚠

- **Clean the flywheel housing surface where sealant is to be applied.**
- **When installing the flywheel housing, take care not to spread the sealant beyond the application area.**
- **Do not start the engine at least for an hour after the flywheel housing has been installed.**
- **If the flywheel housing mounting bolts are subsequently loosened, be sure to apply sealant again upon reassembly.**

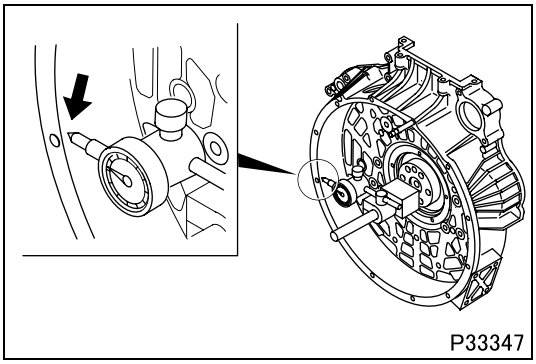

[Inspection]

- While turning the crankshaft, measure the flywheel housing for any eccentricity at the location indicated in the illustration.
- If the eccentricity exceeds the limit, reassemble the flywheel.
- If the eccentricity still exceeds the limit after reassembly, replace the defective part(s).

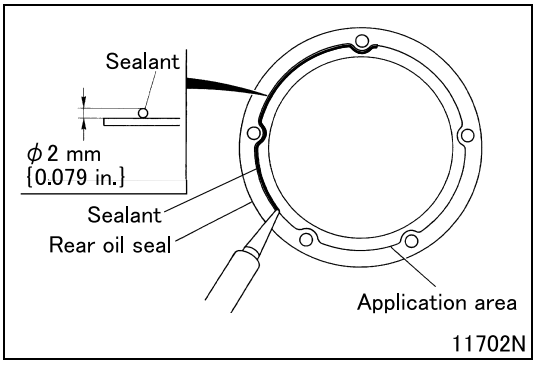

■ Installation: Rear oil seal

- Apply an even and continuous bead of sealant on the rear oil seal as shown in the illustration.
- Install the rear oil seal onto the flywheel housing within 3 minutes following the application.

CAUTION ⚠

- **Clean the rear oil seal surface where sealant is to be applied.**
- **When installing the rear oil seal, take care not to spread the sealant beyond the application area.**
- **Do not start the engine at least for an hour after the rear oil seal has been installed.**
- **If the rear oil seal mounting bolts are subsequently loosened, be sure to apply sealant again upon reassembly.**

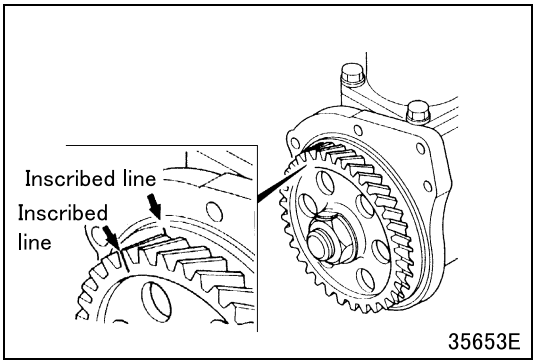

■ **Installation: Air compressor**

- Bring the No. 1 cylinder of the engine to top dead center of the compression stroke.
- After aligning inscribed lines with each other, install the air compressor to the flywheel housing.

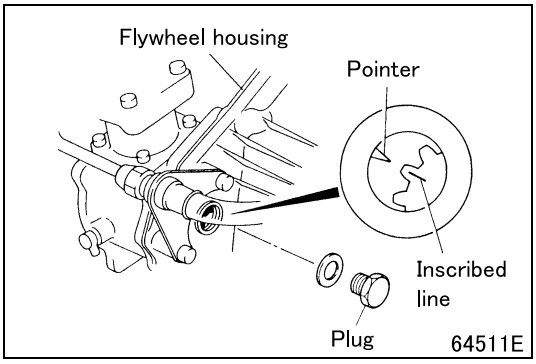

- Remove the inspection plug and check if the inscribed line is aligned with the pointer.
- If not aligned, remove and refit the air compressor.

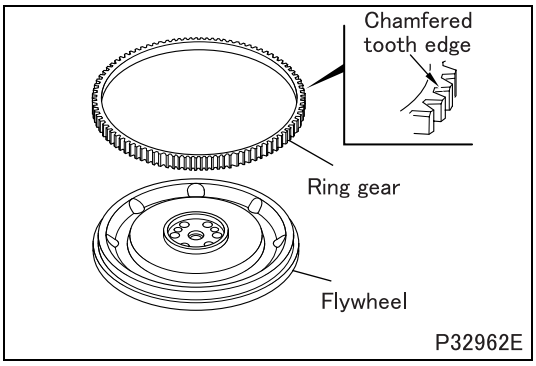

■ **Installation: Ring gear**

- Heat the ring gear evenly with a gas burner or the like until it reaches approximately 200°C {390°F}.

WARNING ⚠

- **You may burn yourself if you touch the heated ring gear.**

- Fit the ring gear with the side having non-chamfered tooth edges toward the flywheel.

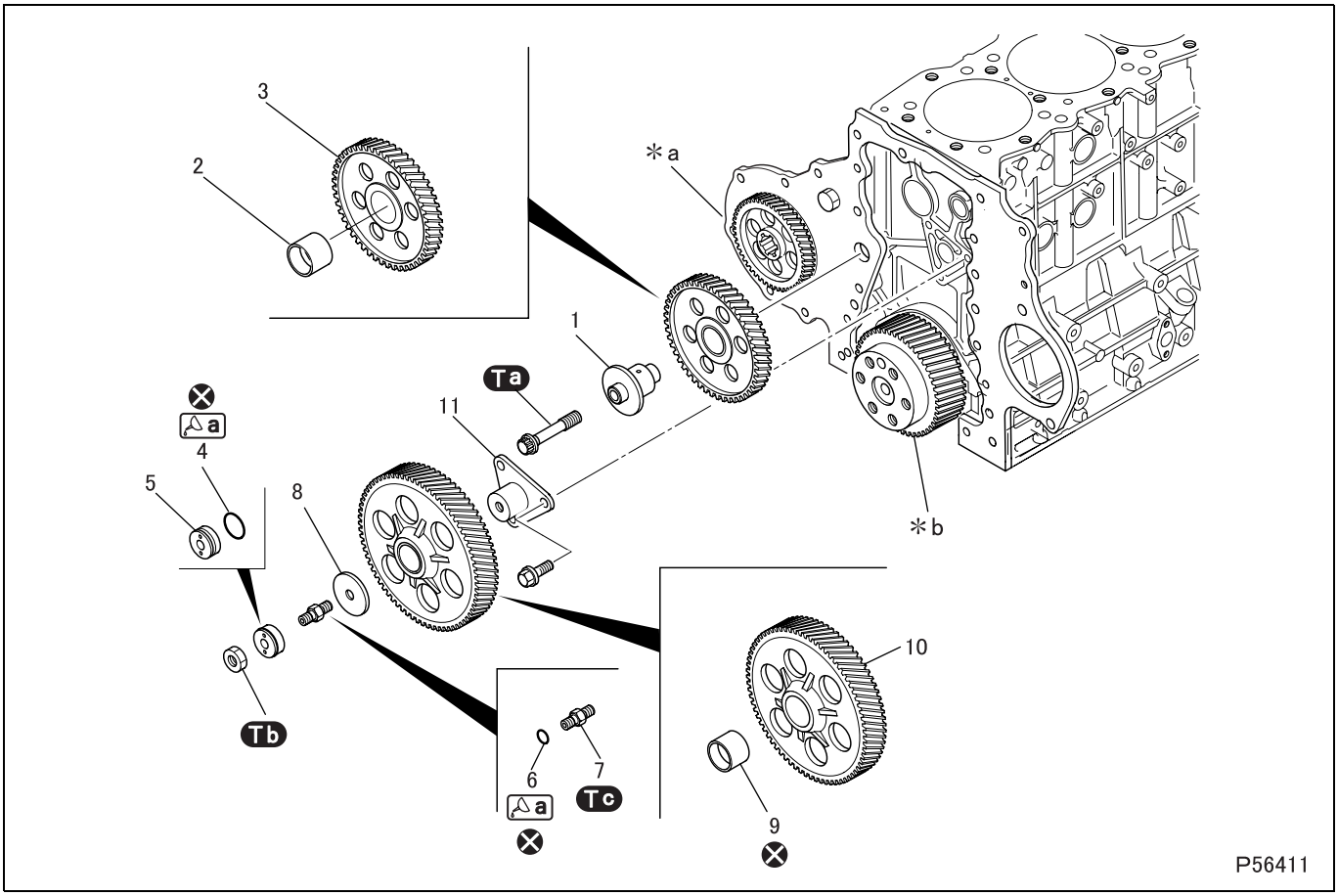

● **Disassembly sequence**

1 No. 1 idler shaft
2 No. 1 idler gear bushing
3 No. 1 idler gear
4 O-ring
5 Collar
6 O-ring
7 No. 2 idler bolt
8 Thrust plate
9 No. 2 idler gear bushing
10 No. 2 idler gear
11 No. 2 idler shaft

***a**: Air compressor gear
***b**: Crankshaft gear

⊗: Non-reusable parts

CAUTION ⚠

- **As the No. 1 idler gear is supported on the No. 1 idler shaft, remove them as an assembly.**

● **Assembly sequence**

Follow the disassembly sequence in reverse.

Service standards (Unit: mm {in.})

Location	Maintenance item		Standard value	Limit	Remedy
–	Backlash between gears	No. 1 idler gear and air compressor gear	0.07 to 0.15 {0.0028 to 0.0059}	0.35 {0.014}	Replace
		No. 1 idler gear and No. 2 idler gear	0.08 to 0.15 {0.0031 to 0.0059}	0.35 {0.014}	Replace
		No. 1 idler gear and crankshaft gear	0.08 to 0.14 {0.0031 to 0.0055}	0.35 {0.014}	Replace
1, 2	Clearance between No. 1 idler shaft and No. 1 idler gear bushing		0.01 to 0.05 {0.00039 to 0.0020}	0.2 {0.0079}	Replace
3, 10	Idler gear end play		0.05 to 0.15 {0.0020 to 0.0059}	0.3 {0.012}	Replace
9, 11	Clearance between No. 2 idler gear bushing and No. 2 idler shaft		0.01 to 0.05 {0.00039 to 0.0020}	0.2 {0.0079}	Replace

Tightening torque (Unit: N·m {ft.lbs, kgf·m})

Mark	Parts to be tightened	Tightening torque	Remarks
Ta	Bolt (No.1 idler gear mounting)	90 {66, 9.1}	–
Tb	Nut (collar mounting)	85 {63, 8.6}	–
Tc	No. 2 idler bolt	95 {70, 9.7}	–

Lubricant and/or sealant

Mark	Points of application	Specified lubricant and/or sealant	Quantity
a	O-ring	Engine oil	As required

Special tools (Unit: mm {in.})

Mark	Tool name and shape	Part No.	Application
a	Gear puller 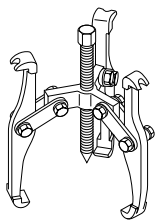 P02065	MH061326	Removal of No. 1 idler shaft and gear
b	Idler gear push-puller A: ϕ 37 {1.46} B: ϕ 40 {1.57} 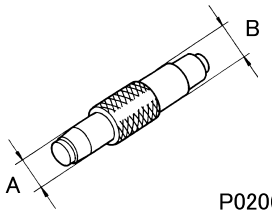 P02066	MH062601	Removal and installation of No. 1 and No. 2 idler gear bushings
c	No. 2 idler shaft puller A: M12 × 1.25 B: M10 × 1.5 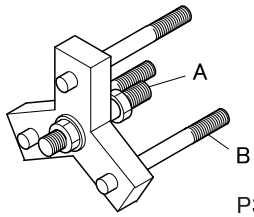 P36309	MH062562	Removal of No. 2 idler gear shaft

◆Inspection before removal◆

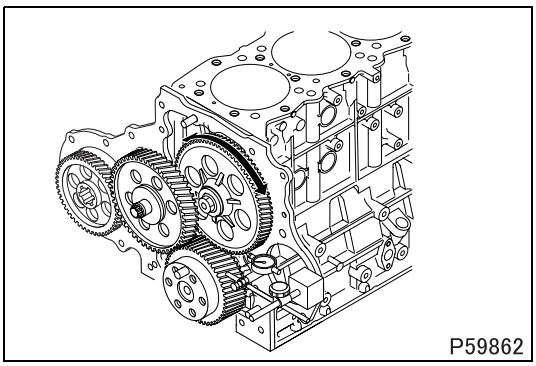

■ **Inspection: Backlash between gears**

- For each pair of gears, measure the backlash at more than three teeth.
- If any of the measurements exceeds the specified limit, replace the defective part(s).

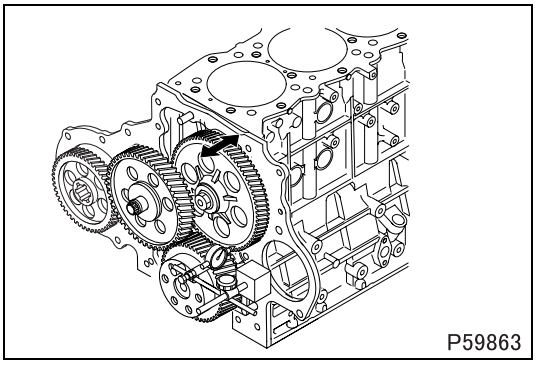

■ **Inspection: Idler gear end play**

- If the measurement exceeds the specified limit, replace the defective part(s).

◆Removal procedure◆

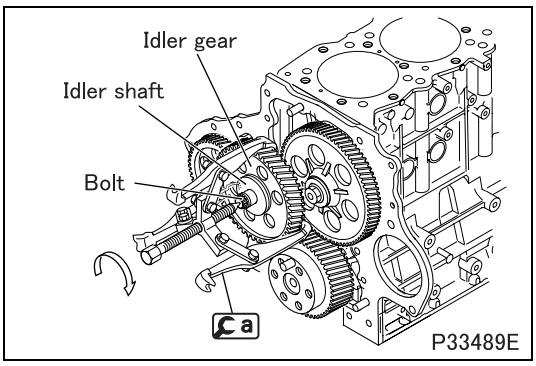

■ **Removal: No. 1 idler shaft and No. 1 idler gear**

- With the bolt loosened by approximately 15 mm {0.59 in.}, pull out the No. 1 idler shaft from the crankcase using a.
- Remove the bolt. Remove the No. 1 idler shaft and No. 1 idler gear.

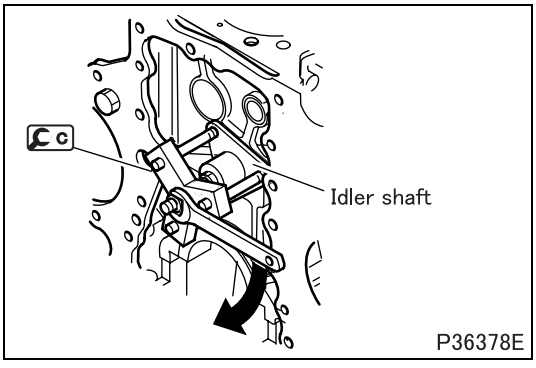

■ **Removal: No. 2 idler shaft**

◆Inspection procedure◆

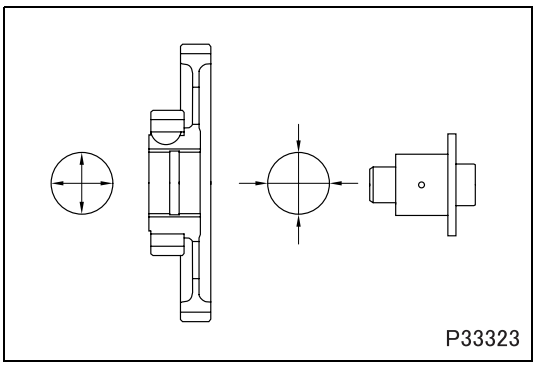

■ **Inspection: Clearance between No. 1 idler shaft and No. 1 idler gear bushing**

[Inspection]

- If the measurement exceeds the limit, replace the bushing.

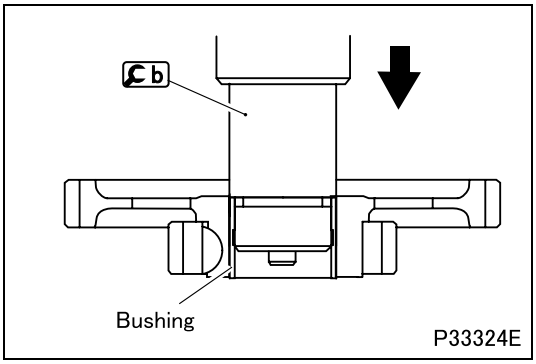

Replacement of No. 1 idler gear bushing

[Removal]

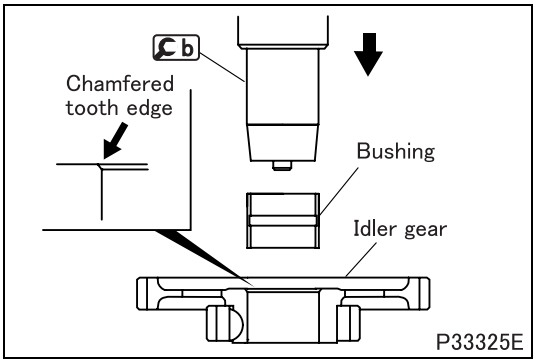

[Installation]

- Place the No. 1 idler gear as shown in the illustration. Using b, insert the bushing until b contacts the chamfered tooth edge of the gear.
- After installation, measure the clearance again.
- If the measurement is less than the standard value, ream the bushing.

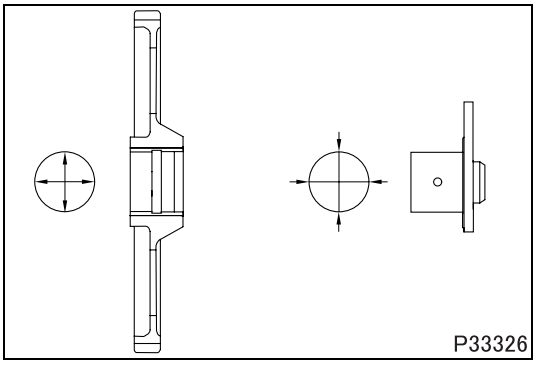

■ **Inspection: Clearance between No. 2 idler gear bushing and No. 2 idler shaft**

[Inspection]

- If the measurement exceeds the limit, replace the bushing.

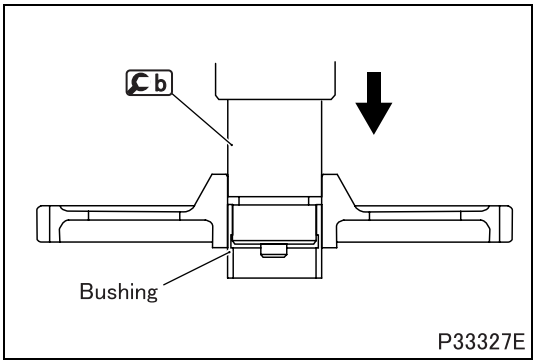

Replacement of No. 2 idler gear bushing
[Removal]

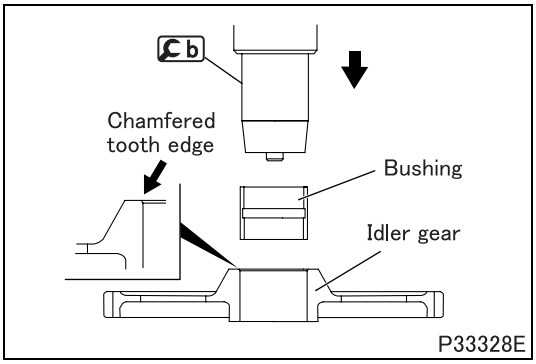

[Installation]

- Place the No. 2 idler gear as shown in the illustration. Using b, insert the bushing until b contacts the chamfered tooth edge of the gear.
- After installation, measure the clearance again.
- If the measurement is less than the standard value, ream the bushing.

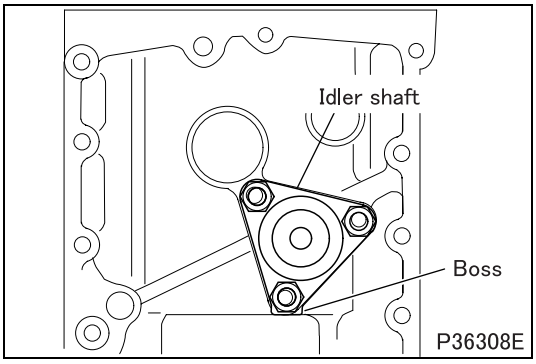

■ Installation: No. 2 idler shaft

- Install the No. 2 idler shaft onto the crankcase ensuring that the boss of the shaft faces down.

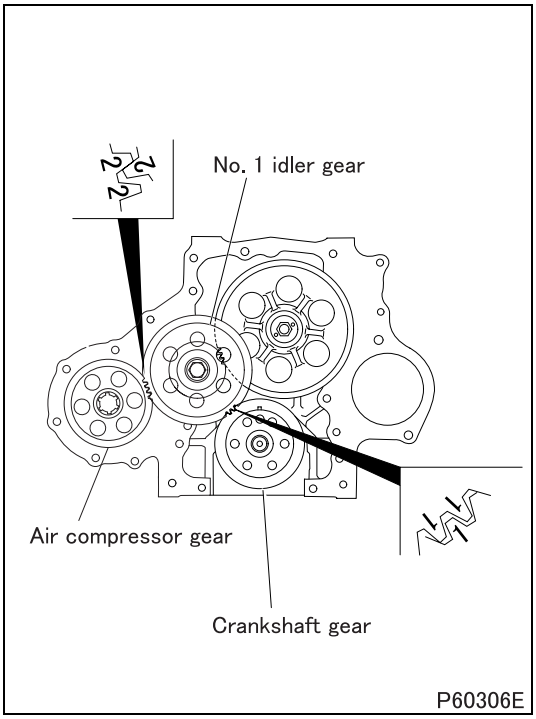

■ Installation: No. 1 idler gear

- Install the No. 1 idler gear such that the alignment mark “2” on the gear is aligned with the alignment mark “2 2” on the air compressor gear.
- When installing the No. 1 idler gear, also ensure that the alignment mark “1 1” on the gear is aligned with the alignment mark “1” on the crankshaft gear.

M E M O

CRANKSHAFT AND CRANKCASE

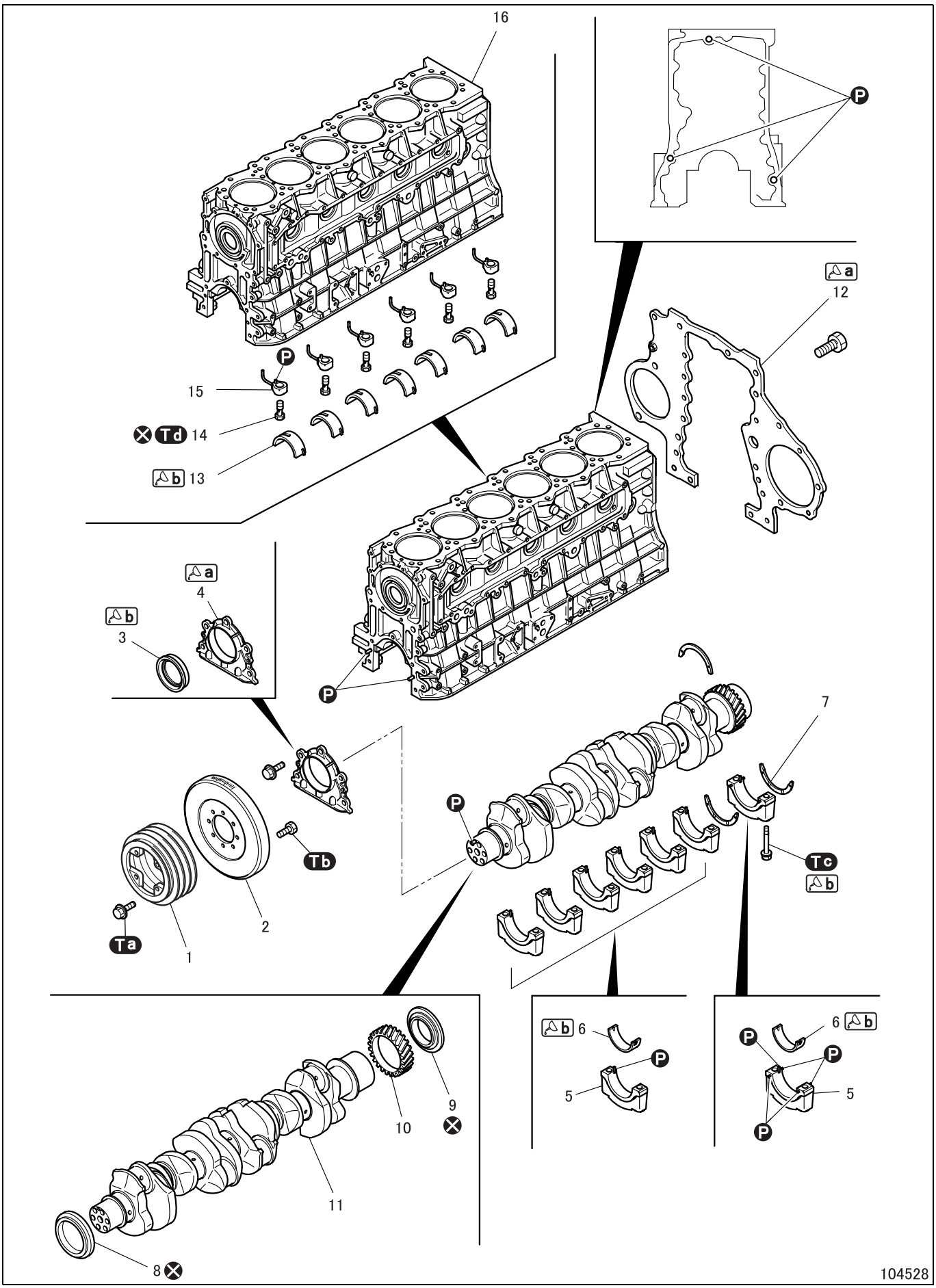

● Disassembly sequence

1 Crankshaft pulley
2 Torsional damper
3 Front oil seal
4 Front cover
5 Main bearing cap
6 Lower main bearing
7 Thrust plate
8 Front oil seal slinger
9 Rear oil seal slinger
10 Crankshaft gear
11 Crankshaft
12 Rear plate
13 Upper main bearing
14 Check valve
15 Oil jet
16 Crankcase

Ⓟ: Locating pin
⊗: Non-reusable parts

CAUTION ⚠

- **The check valve has been tightened using thread-locking compound and so, may deform during removal. Once removed, the check valve must not be reused.**

● Assembly sequence

Follow the disassembly sequence in reverse.

Service standards (Unit: mm {in.})

Location	Maintenance item			Standard value	Limit	Remedy
–	Crankshaft end play			0.10 to 0.25 {0.0016 to 0.0039}	0.4 {0.016}	Replace thrust plate
6, 13	Main bearing	Oil clearance		0.04 to 0.10 {0.0016 to 0.0039}	0.15 {0.0059}	Replace
		Span when free		–	Less than 89.5 {3.52}	Replace
11	Crankshaft	End play		0.10 to 0.25 {0.0039 to 0.0098}	0.4 {0.016}	Replace
		Bend		0.025 {0.0098} or less	0.1 {0.0039}	Rectify or replace
		Pins and journals	Out-of-roundness	0.01 {0.00039} or less	0.03 {0.0012}	Rectify or replace
			Taper	0.006 {0.00024} or less	–	Rectify or replace
		Center-to-center distance top surface		$57.5\ ^{+0.025}_{-0.075}$ $\{2.26\ ^{+0.00098}_{-0.0030}\}$	–	Rectify or replace
		Journal width		$37\ ^{+0.2}_{0}$ $\{1.46\ ^{+0.00079}_{0}\}$	–	
		Pin width		$42\ ^{+0.2}_{0}$ $\{1.65\ ^{+0.00079}_{0}\}$	–	
		Fillet		R4 ± 0.2 {0.16 ± 0.0079}	–	
16	Crankcase	Distortion of crankcase top surface		0.07 {0.0028} or less	0.2 {0.0079}	Rectify or replace
		Cylinder	Out-of-roundness	0.005 or less {0.0002 or less}	–	Replace
			Taper	0.015 or less {0.00059 or less}	–	

Tightening torque (Unit: N·m {ft.lbs, kgf·m})

Mark	Parts to be tightened	Tightening torque	Remarks
Ta	Bolt (crankshaft pulley installation)	190 {140, 19}	–
Tb	Bolt (torsional damper installation)	78 {58, 8}	–
Tc	Bolt (main bearing cap installation)	78 {58, 8.0} + 90° $^{+10°}_{0°}$	• Wet • Reusable up to 3 times
Td	Check valve	34 {25, 3.5}	–

Lubricant and/or sealant

Mark	Points of application	Specified lubricant and/or sealant	Quantity
a	Front cover surface to be mated with crankcase	ThreeBond 1217H	As required
	Rear plate surface to be mated with crankcase		
b	Front oil seal lip	Engine oil	As required
	Thread of bolts		
	Inside surface of main bearing		

Special tools (Unit: mm {in.})

Mark	Tool name and shape	Part No.	Application
a	Main bearing cap extractor A: 32 {1.26}, B: M8 × 1.25 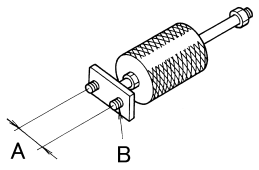 02097	MH061189	Removal of main bearing cap
b	Socket wrench 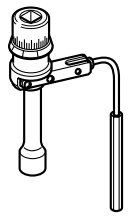 P01984	MH061560	Installation of main bearing cap
c	Front oil seal slinger installer A: ϕ 76 {2.99} 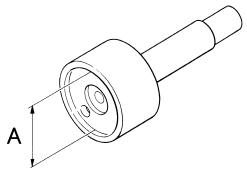 13625	MH062710	Installation of front oil seal slinger
d	Rear oil seal slinger installer A: ϕ 115 {4.53}, B: ϕ 100 {3.94}, C: ϕ 14 {0.55} 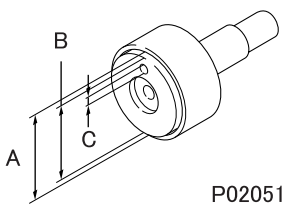 P02051	MH061470	Installation of rear oil seal slinger

Mark	Tool name and shape	Part No.	Application
e	Gear puller 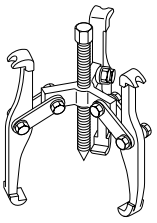 P02065	MH061326	Removal of crankshaft gear

◆Inspection before removal◆

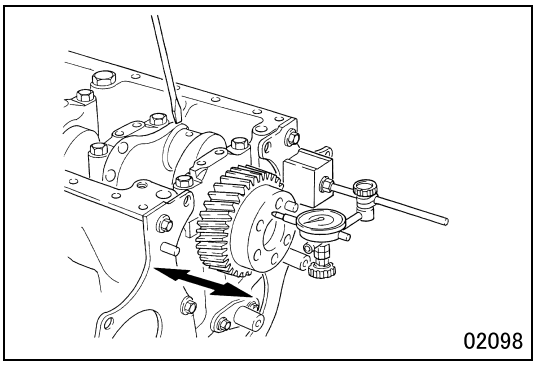
02098

■ **Inspection: Crankshaft end play**

- If the measurement exceeds the specified limit, replace the thrust plates with oversized ones.

◆Removal procedure◆

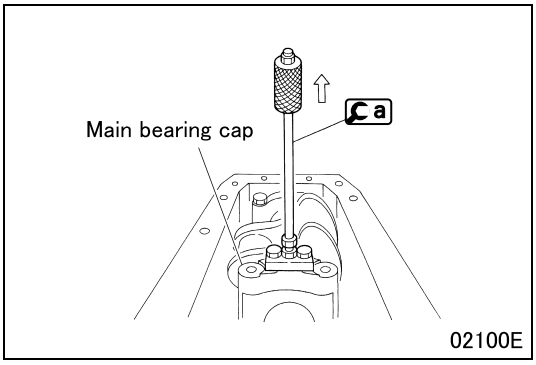

02100E

■ **Removal: Main bearing caps**

■ **Removal: Front oil seal slinger**

- Taking care not to damage the crankshaft, split the rear oil seal slinger using a chisel or a similar tool.

■ **Removal: Rear oil seal slinger**

- Taking care not to damage the crankshaft, split the rear oil seal slinger using a chisel or a similar tool.

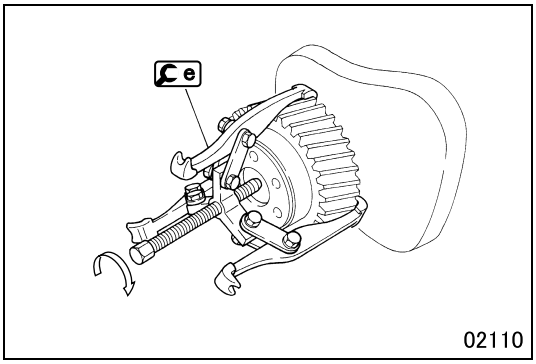

02110

■ **Removal: Crankshaft gear**

CAUTION ⚠

- **Do not tap off the crankshaft gear as this can damage it.**

◆Inspection procedure◆

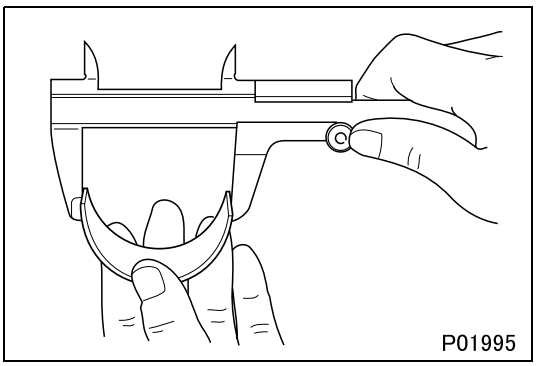

■ **Inspection: Main bearing span when free**

- If the measurement is less than the limit, replace upper and lower bearings as a set.

CAUTION ⚠

- **Do not attempt to manually expand the bearings.**

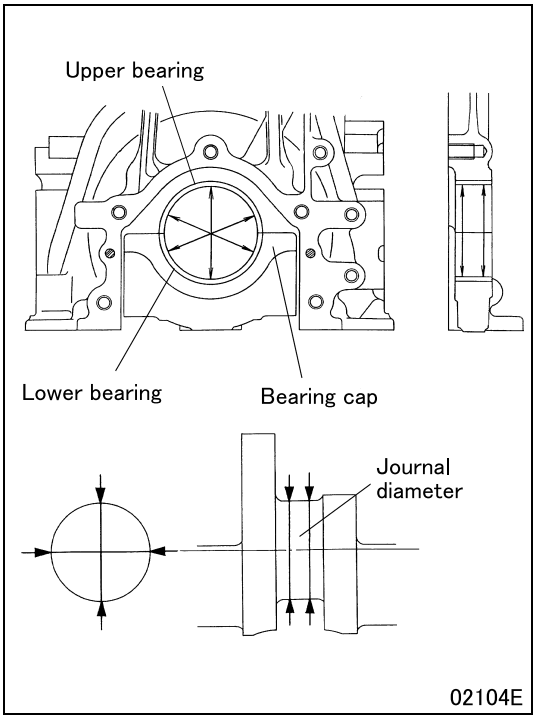

(2) Main bearing-to-crankshaft oil clearance

- Fit the upper main bearing into the crankcase and the lower main bearing into the main bearing cap.
- Tighten the main bearing cap bolts to a torque of 78 N·m {58 ft.lbs, 8 kgf·m}.
- Measure the inside diameter of the main bearing and the diameter of the corresponding crankshaft journal.
- If the difference between the measurements exceeds the specified limit, machine the crankshaft journal to one of the specified undersize dimensions.

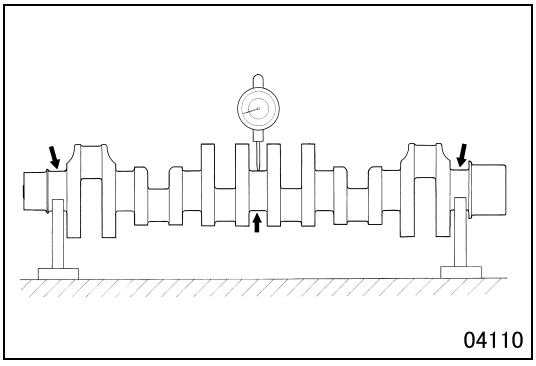

■ **Inspection: Crankshaft**

(1) Bend

- Place supports under the journals at the ends of the crankshaft end measure the bend of the crankshaft at the center journal. The amount of crankshaft bend is obtained by giving the crankshaft one turn and dividing the dial gauge reading by two.
- If the measurement exceeds the specified limit, replace the crankshaft.

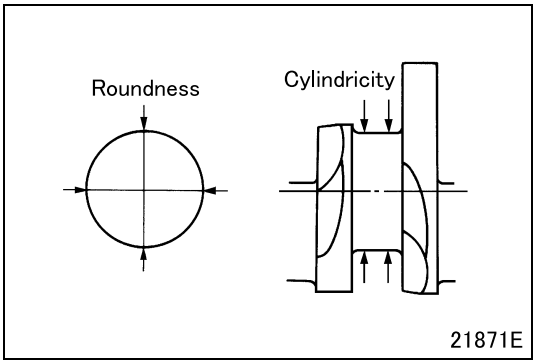

(2) Roundness and cylindricity of crankshaft journals and pins

- If any of the measurements exceeds the specified limits, grind the crankshaft journal(s) and/or pin(s) to undersize(s) or replace the crankshaft.

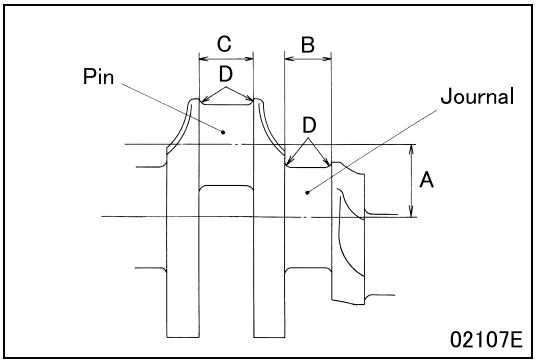

Grinding of crankshaft

CAUTION ⚠

- **If the crankshaft pins and journals are ground to undersizes, be sure to use bearings of corresponding undersizes.**

- Confirm the dimension of each position from the service standards table and rectify the crankshaft while observing the following procedures.
- Do not change the center-to-center distance A between the journal and pin.
- Do not change the journal width B and the pin width C.
- Finish the fillets D smoothly.
- Carry out a magnetic inspection to check for cracks possibly caused by grinding. Also, check that the hardness of the surface has not dropped below Shore hardness number (Hs) 75.
- Replace the crankshaft if defects are evident.

Crankshaft undersize dimensions (Unit: mm {in.})

	Undersizes			
	0.25 {0.0098}	0.50 {0.020}	0.75 {0.030}	1.00 {0.039}
Finished journal outside diameter	83.685 to 83.705 {3.294 to 3.295}	83.435 to 83.455 {3.284 to 3.285}	83.185 to 83.205 {3.274 to 3.275}	82.935 to 82.955 {3.2651 to 3.2659}
Finished pin outside diameter	69.67 to 69.69 {2.742 to 2.743}	69.42 to 69.44 {2.7330 to 2.7338}	69.17 to 69.19 {2.723 to 2.724}	68.92 to 68.94 {2.713 to 2.714}
Out-of-roundness	0.01 {0.00039} or less			
Taper	0.006 {0.00024} or less			

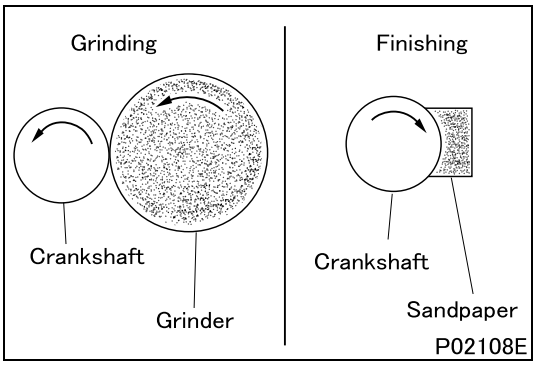

- When grinding, turn both the crankshaft and the grinder counterclockwise as viewed from the crankshaft front end.
- When finishing the crankshaft with westone or sandpaper, rotate the crankshaft clockwise.

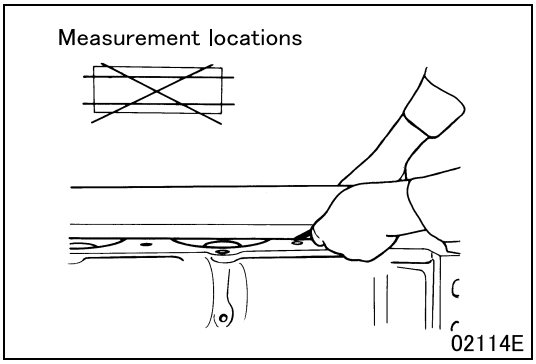

■ **Inspection: Distortion of crankcase top surface**

- If the measurement exceeds the limit, correct the crankcase top surface with a surface grinder.

CAUTION ⚠

- **Do not grind the crankcase top surface so much as to compromise the correct piston projection.**

◆Installation procedure◆

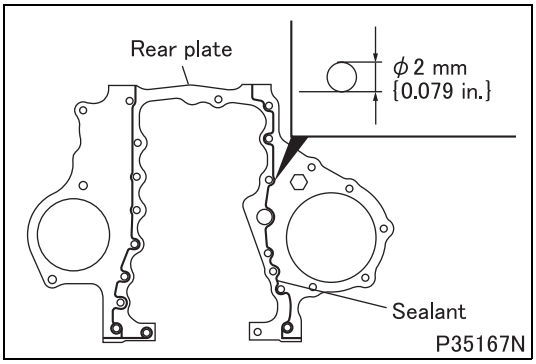

■ **Installation: Rear plate**

- Apply an even and continuous bead of sealant onto the rear plate surface where the crankcase is to be mounted.
- Install the rear plate onto the crankcase within 3 minutes following the application.

CAUTION ⚠

- **Clean the rear plate surface where sealant is to be applied.**
- **When installing the rear plate, take care not to spread the sealant beyond the application area.**
- **Do not start the engine at least for an hour after the rear plate has been installed.**
- **If the rear plate mounting bolts are subsequently loosened, be sure to apply sealant again upon reassembly.**

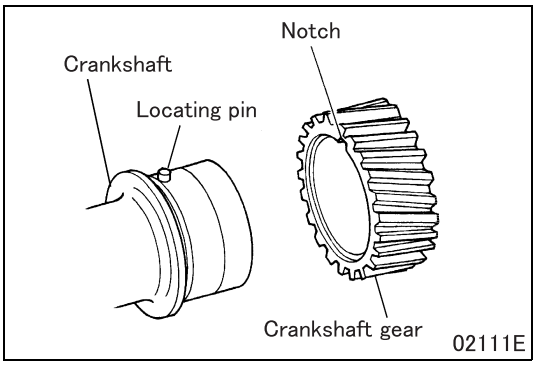

■ **Installation: Crankshaft gear**

- Heat the crankshaft gear to approximately 100°C {212°F} with a burner or the like.

WARNING ⚠

- **Be careful not to get burned.**

- Align the key fitted in the crankshaft with the slot in the crankshaft gear. Drive the gear into position by lightly striking its end face with a plastic hammer.

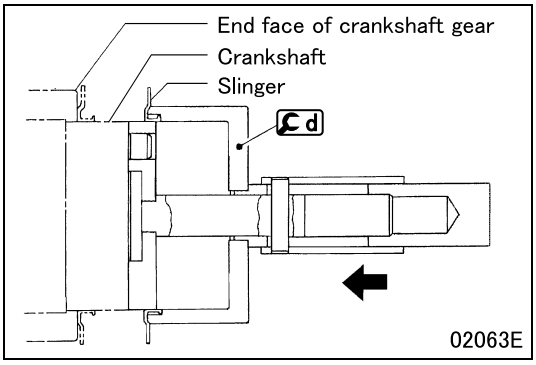

■ **Installation: Rear oil seal slinger**

- Using Cd, install the rear oil seal slinger onto the crankshaft until Cd comes into positive contact with the end face of the crankshaft gear.

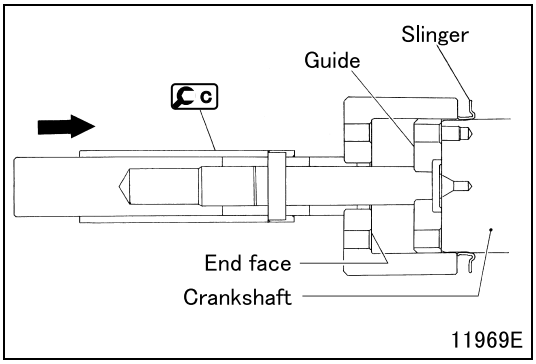

■ **Installation: Front oil seal slinger**

- Using C, install the front oil seal slinger onto the crankshaft until the end face of C comes into positive contact with the guide.

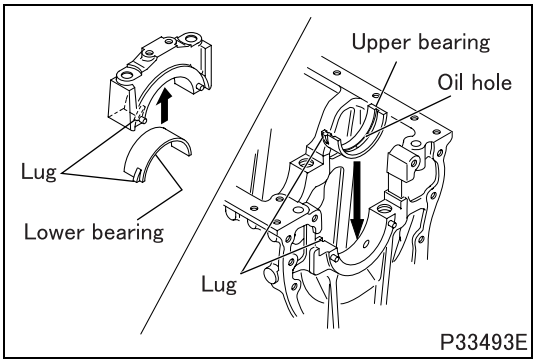

■ **Installation: Main bearing**

- Install the main bearings with their lugs aligned as shown in the illustration. When the crankshaft journals have been ground to an undersize, use undersized main bearings.
  Available main bearing undersizes: 0.25 mm {0.0098 in.}, 0.50 mm {0.020 in.}, 0.75 mm {0.030 in.}, 1.00 mm {0.039 in.}

CAUTION ⚠

- **The upper main bearing has an oil hole. The lower main bearing has no oil hole. Do not confuse the upper and lower bearings, as this can cause seizure in the engine.**

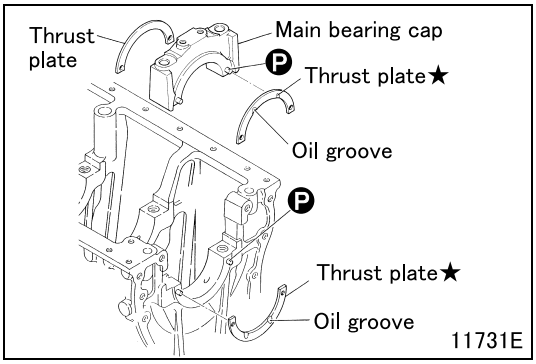

■ **Installation: Thrust plate**

- Install trust plates on both sides of the main bearing cap and the rear end of the crankcase, ensuring that the oil grooves face outside.

P: Locating pin

NOTE

- **If oversized thrust plates are to be used, those with a ★ mark must be the same in size. Oversized thrust plates are available in the following sizes: 2.6 mm {0.102 in.}, 2.75 mm {0.108 in.} and 2.9 mm {0.114 in.}.**

CAUTION ⚠

- **If thrust plates are installed with the oil grooves facing inside, the engine may seize.**

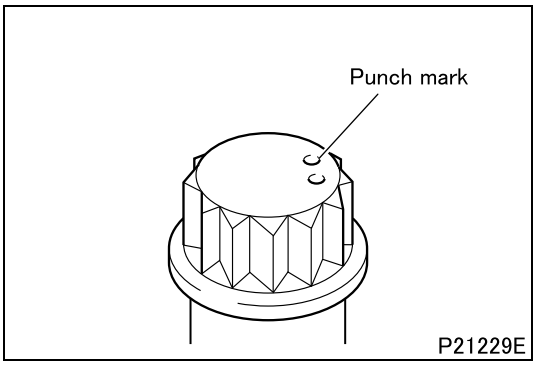

■ **Installation: Main bearing cap**

CAUTION ⚠

- **Before installing the main bearing cap bolts, check the number of punch marks on the head of each bolt. (A bolt with two or less marks is reusable.)**
- **The number of punch marks corresponds with the number of times the main cap bolt has been tightened using the torque-turn tightening method. Any bolt that has three marks (i.e. that has been used three times) must be replaced.**

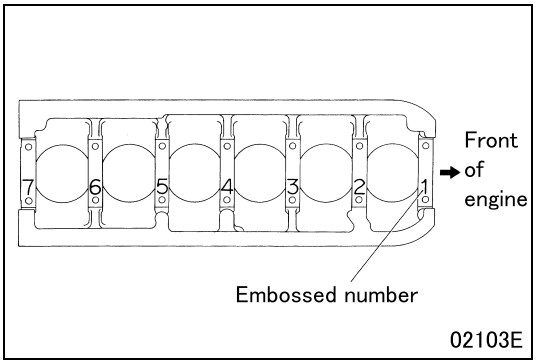

- Starting at the front of the engine, fit the main bearing caps in the order of the embossed numbers facing the illustrated direction.

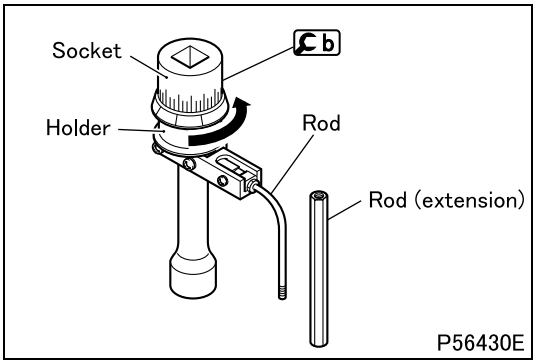

- Tighten all the bolts to 78 N·m {58 ft.lbs, 8 kgf·m}, then additionally tighten them according to the following procedure.
- Turn the holder of b counterclockwise to pretension the internal spring.

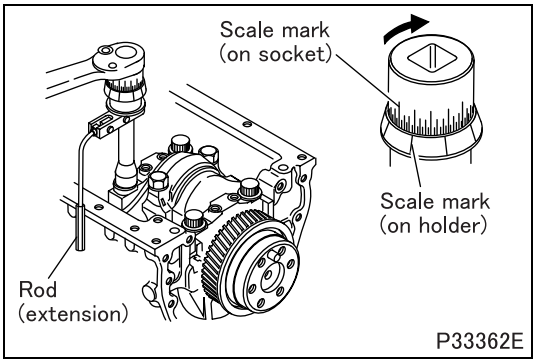

- Set b such that the rod (extension) is pressed against the crankshaft by the force of the spring.
- Align a scale mark on the socket with a scale mark on the holder. (This point will be the point of reference, or the 0° point.)
- Starting with this point of reference, turn the socket with a wrench in the illustrated direction until the scale on the socket indicates 90°.
  One graduation on the socket-side scale represents 5°.
- After tightening the bolts using the above torque-turn tightening method, make a punch mark on the head of each bolt to indicate the number of times that it has been used.

CAUTION ⚠

- **The bolts that have been tightened using the torque-turn method must never be additionally tightened after the final angular tightening.**

- After installing the main bearing cap, rotate the crankshaft by hand. If it cannot be rotated smoothly, inspect the main bearing caps for correct installation.

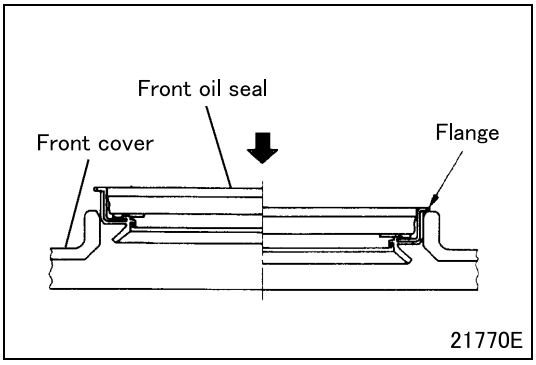

■ Installation: Front oil seal

- Install the front oil seal onto the front cover while pressing the seal's entire periphery evenly to prevent it from tilting.
- Install the front oil seal until its flange comes into positive contact with the front cover.

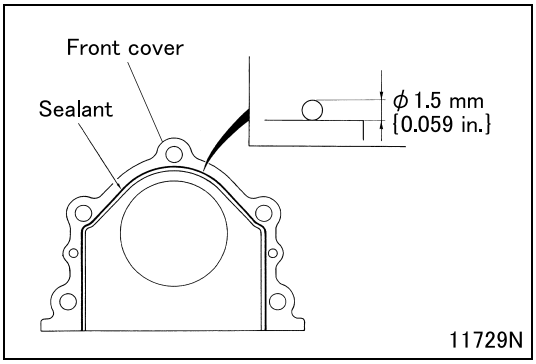

■ **Installation: Front cover**

- Apply an even and continuous bead of sealant onto the front cover surface where the crankcase is to be mounted.
- Install the front cover onto the crankcase within 3 minutes following the application.

CAUTION ⚠

- **Clean the front cover surface where sealant is to be applied.**
- **When installing the front cover, take care not to spread the sealant beyond the application area.**
- **Do not start the engine at least for an hour after the front cover has been installed.**
- **If the front cover mounting bolts are subsequently loosened, be sure to apply sealant again upon reassembly.**

Group 12

Lubrication

Table of Contents

Back

Home

MITSUBISHI FUSO TRUCK OF AMERICA, Inc.

Pub.No.TWME0806-12

INDEX

SPECIFICATIONS 12-2

STRUCTURE AND OPERATION

1. **Lubrication System 12-3**
2. **Oil Pump 12-4**
3. **Oil Cooler 12-5**
4. **Oil Filter 12-6**
5. **Lubrication of Engine Components 12-7**

TROUBLESHOOTING..... 12-11

ON-VEHICLE INSPECTION AND ADJUSTMENT

1. **Oil Filter Replacement 12-12**
2. **Engine Oil Replacement 12-14**
3. **Engine Oil Level Inspection 12-15**
4. **Oil Pressure Measurement 12-16**

OIL PAN, OIL JETS AND OIL LEVEL SENSOR 12-17

OIL PUMP, OIL STRAINER 12-20

OIL FILTER 12-23

OIL COOLER 12-24

REGULATOR VALVE 12-26

SPECIFICATIONS

Item			Specifications
Method of lubrication			Oil pump type
Oil filter			Spin-on paper-filter type
Oil cooler			Shell and plate type (multiple-plate type)
Engine oil	Grade		API classification CJ-4
	Quantity L {qts}	Oil pan	Approx. 11 {12}
		Oil filter	Approx. 2.3 {2.4}

1. Lubrication System

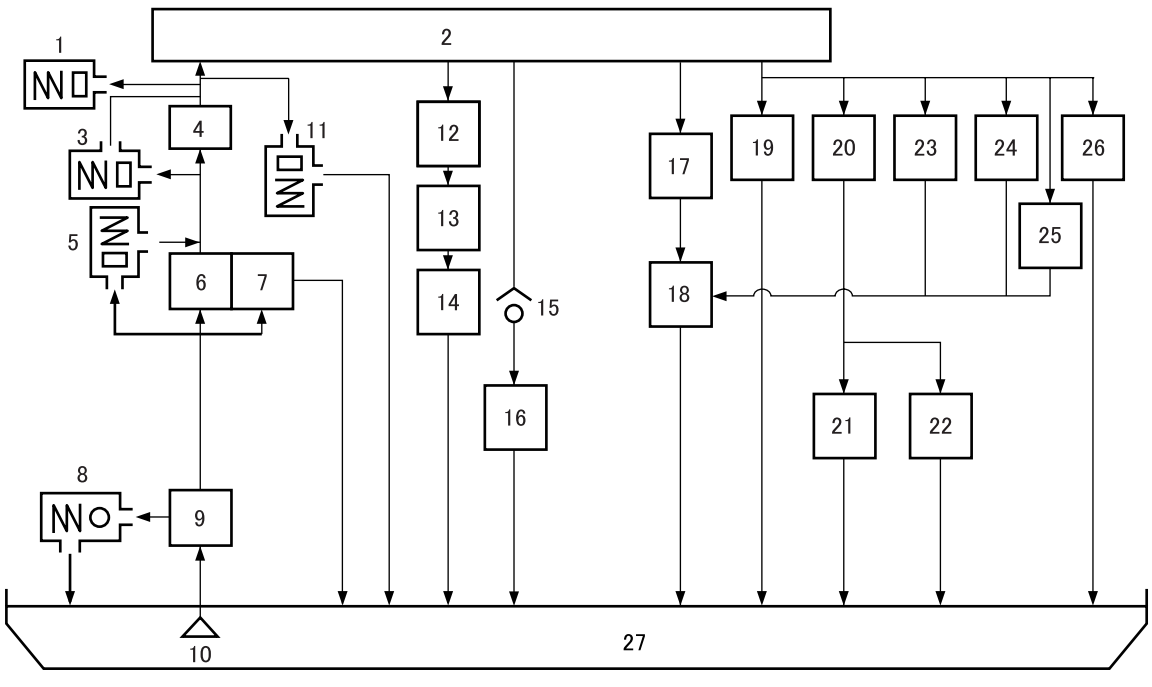

1 Engine oil pressure switch
2 Main oil gallery
3 Bypass valve
4 Oil cooler
5 Engine oil bypass alarm switch
6 Full-flow filter element
7 Bypass filter element
8 Relief valve (built into oil pump)
9 Oil pump
10 Oil strainer
11 Regulator valve
12 Crankshaft main bearing
13 Connecting rod bearing
14 Connecting rod bushing
15 Check valve for oil jet
16 Piston
17 Air compressor
18 Timing gear
19 Camshaft bushing
20 Rocker bushing
21 Roller
22 Valve bridge
23 No.1 Idler shaft
24 No.2 Idler shaft
25 No.3 Idler shaft
26 Turbocharger
27 Oil pan

2. Oil Pump

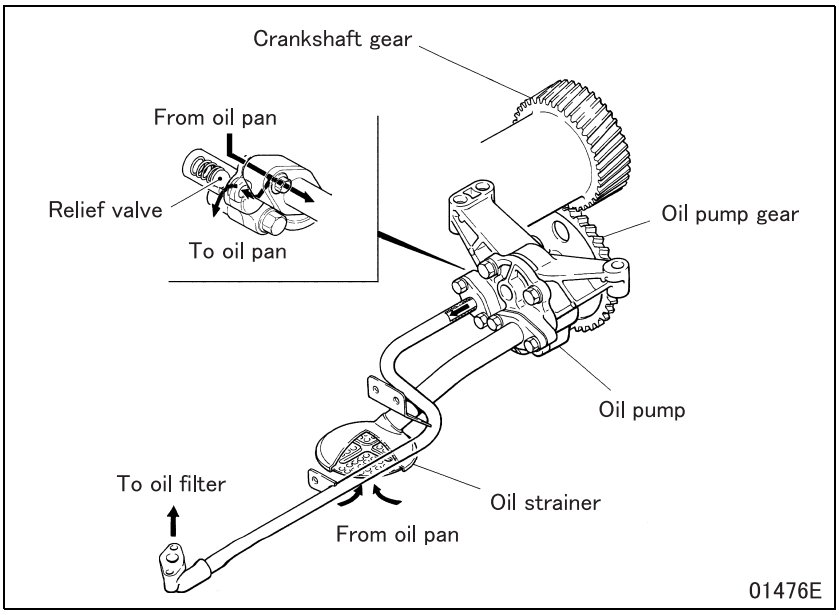

- This engine uses a gear-type oil pump driven by the rotation of the crankshaft transmitted through the engagement of the crankshaft gear and the oil pump gear.
- The oil pump has a relief valve, which prevents excessive pressure from building up inside the lubricating system by allowing part of the engine oil to escape to the oil pan when the oil pressure exceeds a specified level.

3. Oil Cooler

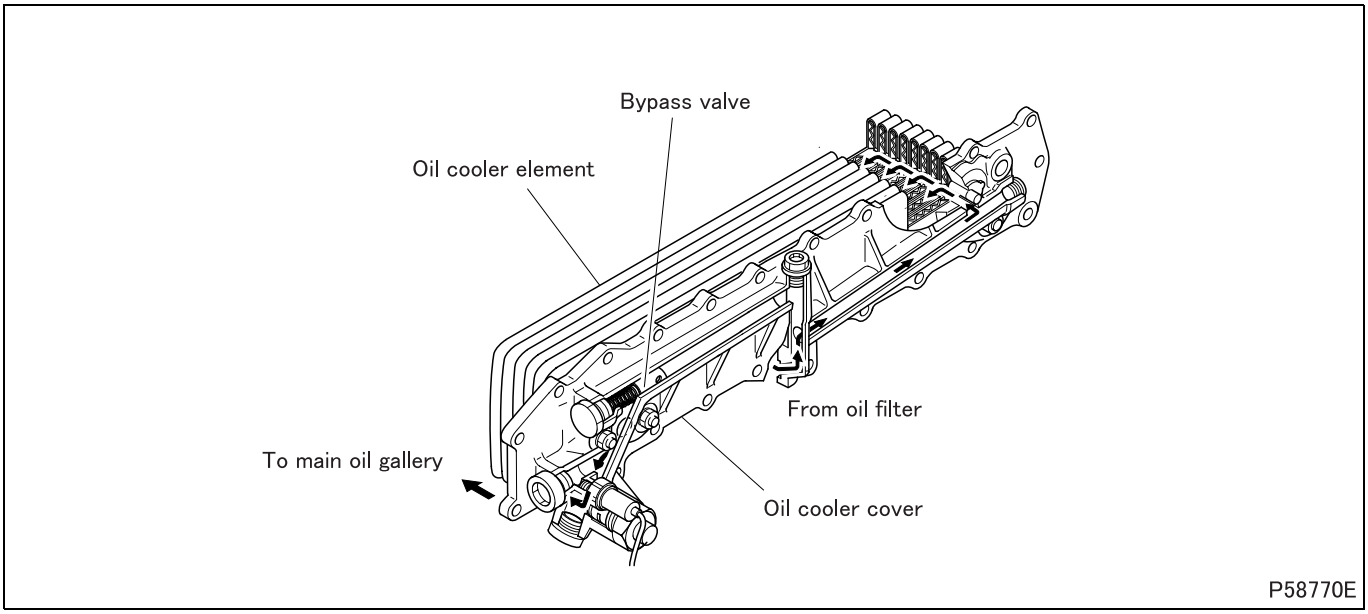

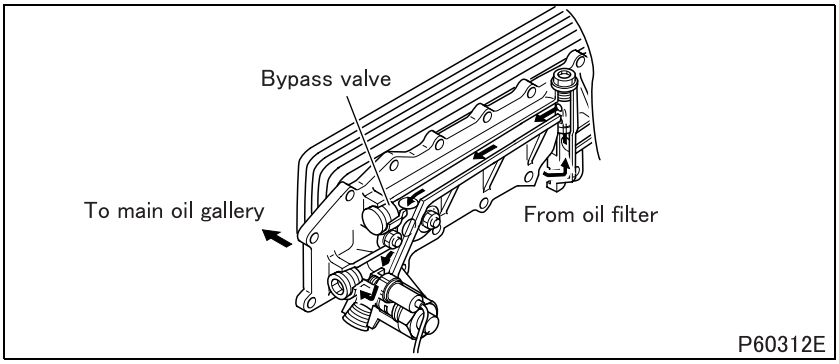

3.1 Bypass valve

- When the engine oil is cool and its viscosity is high, or when the oil cooler element becomes clogged and restricts the flow of the engine oil, the bypass valve opens to let the engine oil bypass the oil cooler and flow directly to the oil filter.

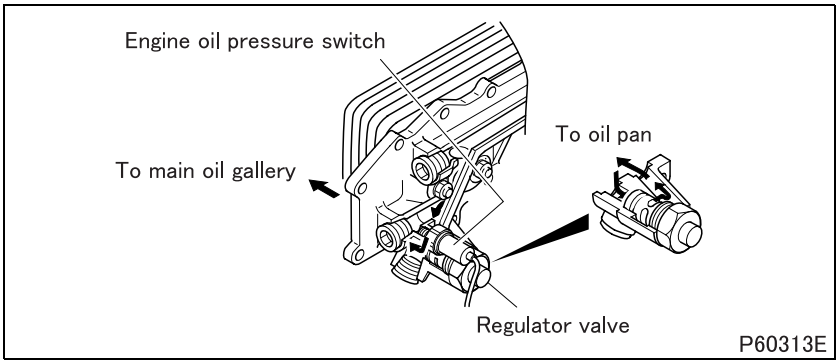

3.2 Engine oil pressure switch and regulator valve

- When the pressure of the engine oil to the main oil gallery drops below the specified level, an electrical contact inside the engine oil pressure switch closes. This causes a warning lamp on the meter cluster to illuminate and notify the operator of the excessive pressure drop.
- When the oil pressure in the main oil gallery exceeds the specified level, the regulator valve opens to adjust the oil pressure by allowing part of the engine oil to escape to the oil pan.

4. Oil Filter

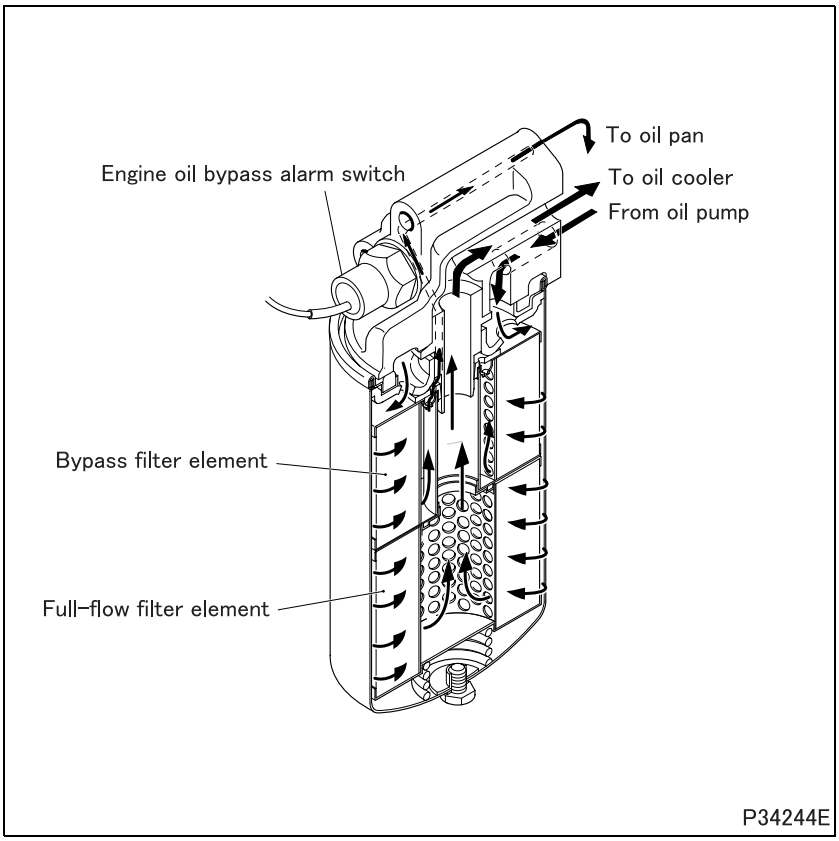

- This oil filter is a spin-on paper-filter type that incorporates both a full-flow filter and a bypass filter.

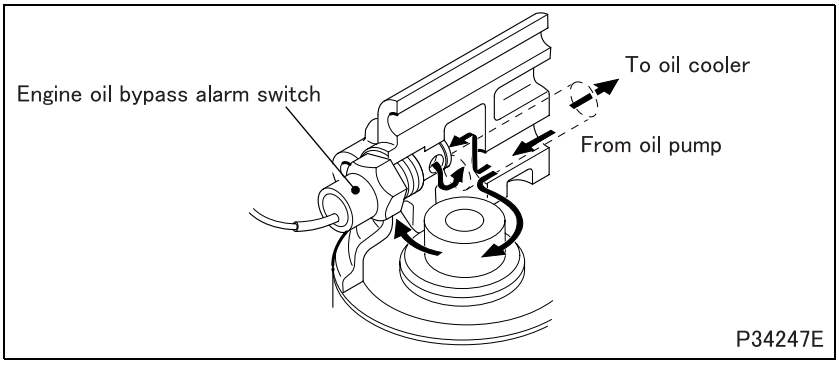

4.1 Engine oil bypass alarm switch

- If the oil filter elements clog up, this will restrict the flow of engine oil, causing the engine to seize. To prevent this, the oil filter is provided with the engine oil bypass alarm switch.
- If the oil filter clogs up, the engine oil bypass alarm switch trips in such a way as to direct the engine oil straight on to the oil cooler, bypassing the full-flow and bypass filter elements. When the switch trips, the relevant warning lamp illuminates to alert the operator to the clogged oil filter.

5. Lubrication of Engine Components

- The engine oil in the main oil gallery lubricates the engine components in the following ways.

5.1 Main bearing and connecting rod bearing

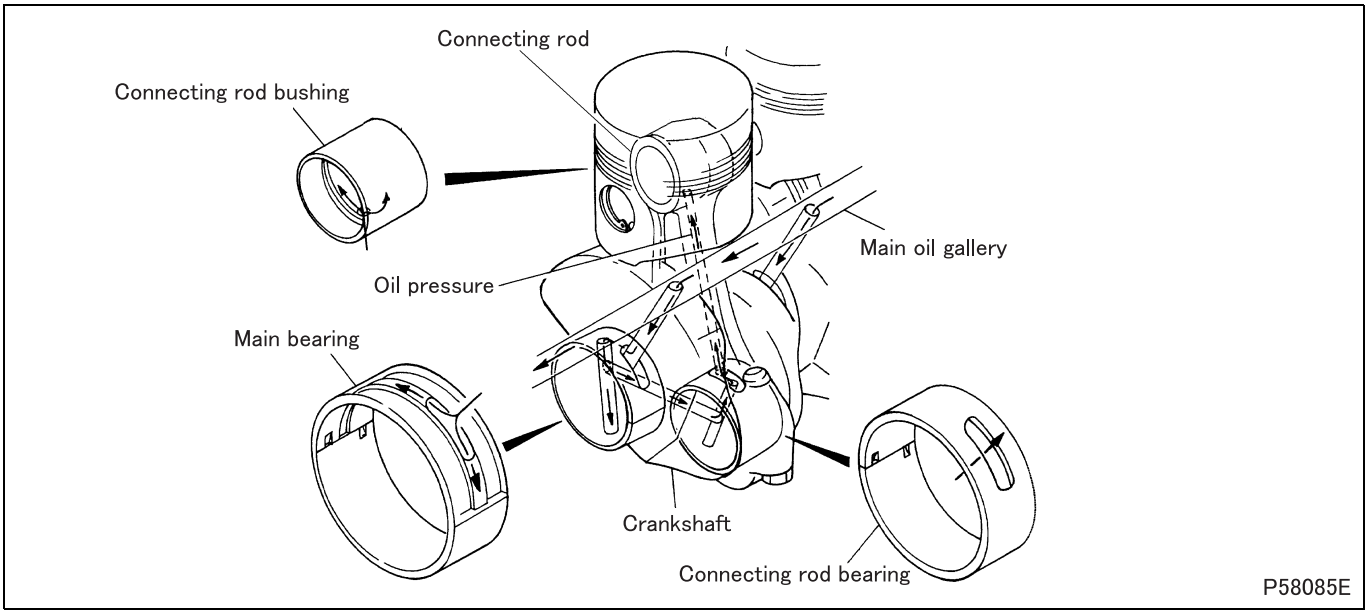

- Engine oil supplied through an oil passage in the crankshaft lubricates the big end (connecting rod bearing) of each connecting rod. Simultaneously, engine oil supplied through an oil passage in the connecting rod lubricates the connecting rod's small end.

5.2 Timing gears

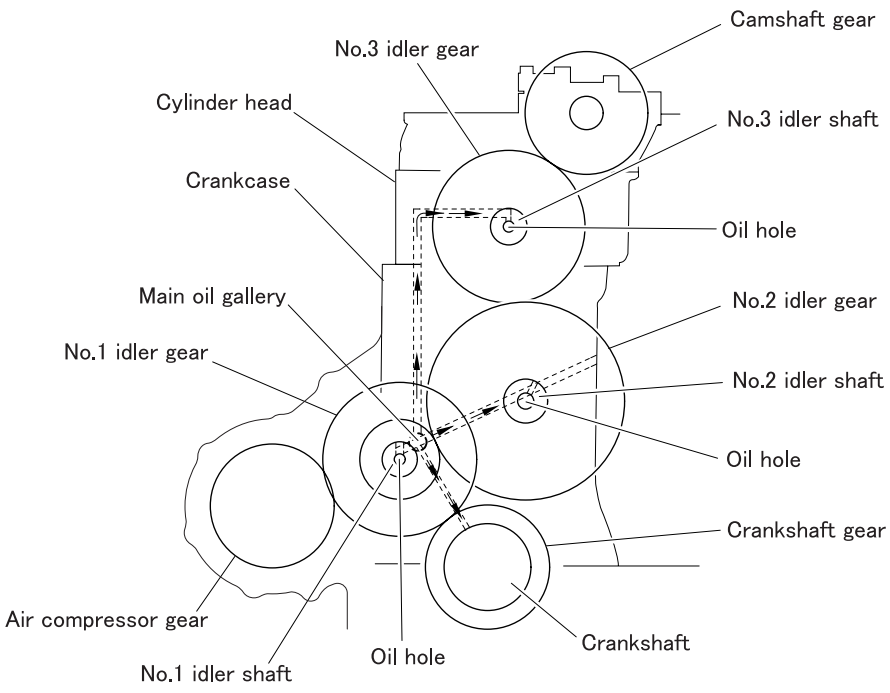

P60271E

- Engine oil in the main oil gallery is directed through the oil passages in the crankcase and cylinder head and is used to lubricate the various gear shafts. After lubricating the gear shafts, the oil is used to lubricate the gears before returning the oil pan.

5.3 Valve mechanism

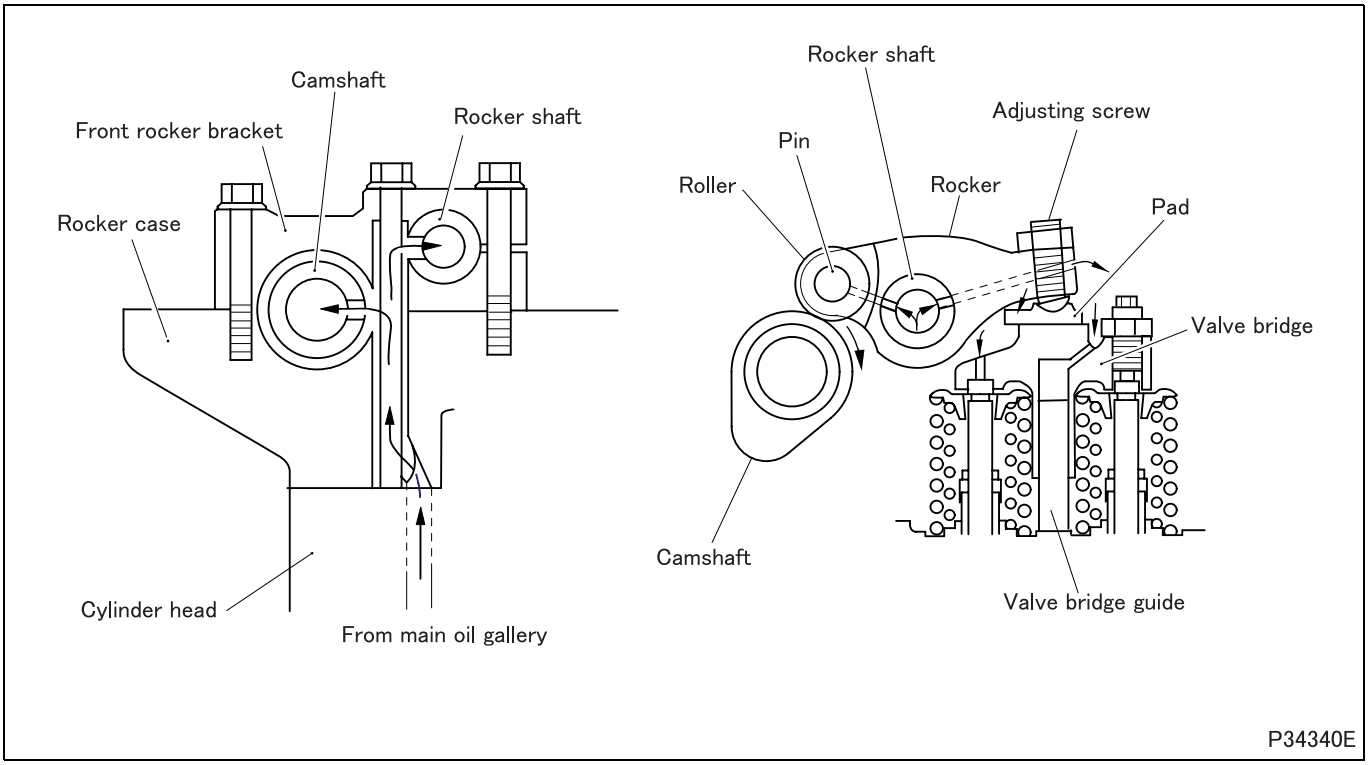

- Engine oil in the main oil gallery is directed through the oil passages in the cylinder head, rocker case and front rocker bracket. The oil is then supplied through the camshaft and rocker shaft. The oil flowing through the camshaft also lubricates the camshaft journals. The oil flowing through the rocker shaft also lubricates the rockers. The oil flowing to the adjusting screws on the rockers also lubricates the valve bridges. After lubricating the various parts, the oil returns to the oil pan.

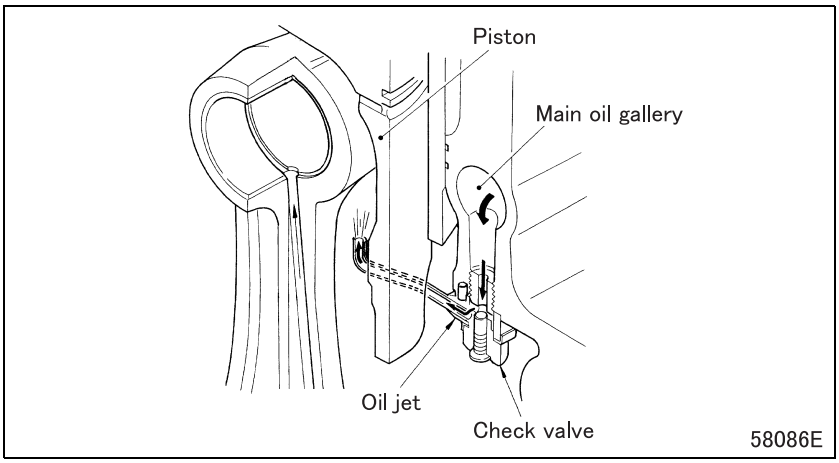

5.4 Check valves and oil jets

- An oil jet is fitted in the lower part of the main oil gallery for each cylinder.
- Engine oil is sprayed out of the oil jet into the piston to cool the piston.
- Each oil jet is fitted with a check valve that opens and closes at predetermined oil pressure levels. At low engine speeds, the check valve closes to maintain the required volume of oil in the lubrication system and prevent reductions in oil pressure.

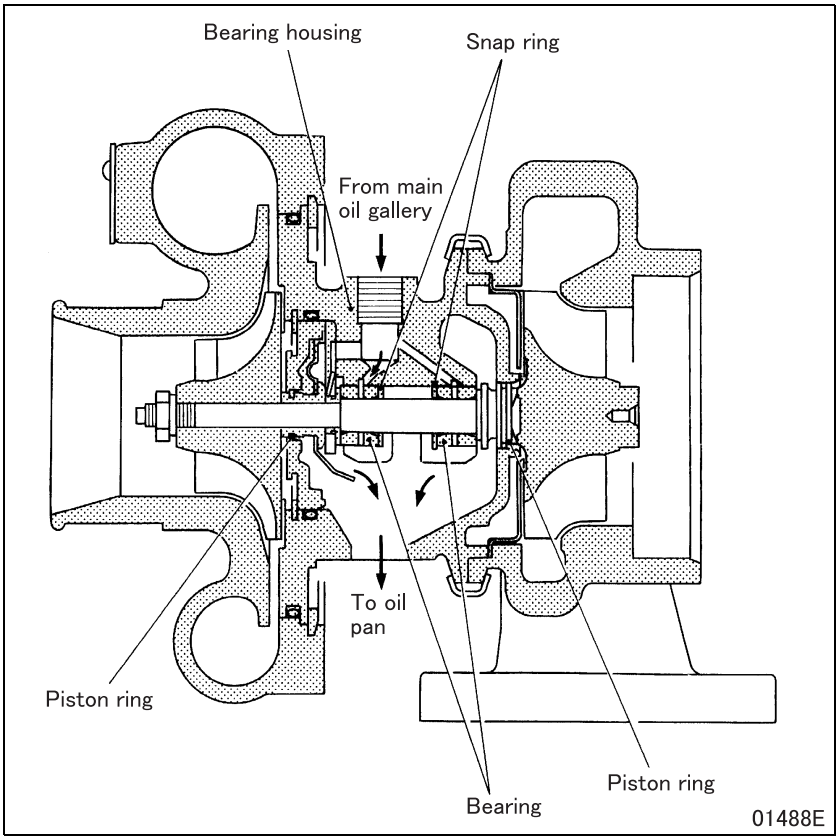

5.5 Turbocharger

- Engine oil in the main oil gallery is directed through a pipe to the bearing housing to lubricate the inner components.
- A piston ring is provided on each end of the turbine wheel shaft. The rings function as oil sealing.

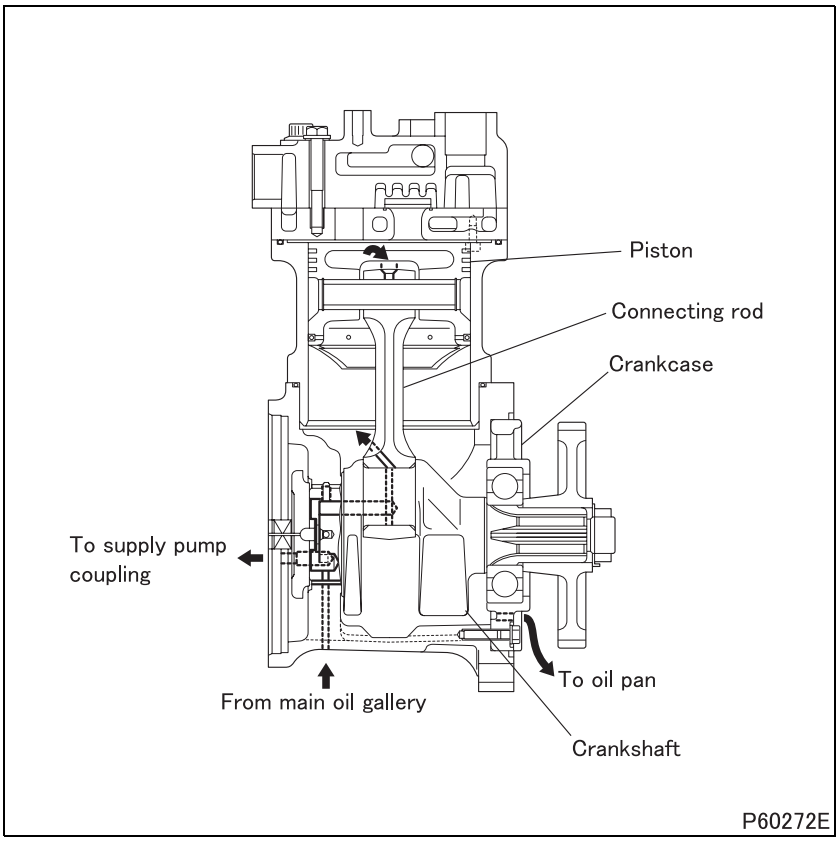

5.6 Air compressor

- Engine oil in the main oil gallery is directed through a passage in the crankshaft to the supply pump coupling and also to the big ends of the connecting rods to lubricate these parts.
  At the same time, the pistons and the small ends of the connecting rods are splash-lubricated with engine oil by the rotating crankshaft.

Possible causes \ Symptoms		Engine is difficult to start	Overheating	Low oil pressure	Excessive oil consumption (oil leakage)	Reference Gr
Oil cooler	Incorrectly mounted element		O	O	O	
	Defective gasket		O	O	O	
	Defective O-ring		O	O	O	
	Clogged element		O	O		
	Damaged element		O	O	O	
	Weakened bypass valve spring		O			
Oil pump	Malfunctioning oil pump		O	O		
	Interference between oil pump gear and oil pump case and/or cover	O		O		
	Incorrectly connected oil pipe		O	O		
	Clogged oil strainer		O	O		
	Weakened relief valve spring			O		
Oil filter	Incorrect installation				O	
	Clogged element		O	O		
	Defective O-ring			O		
Front cover timing gear case	Defective front oil seal				O	Gr11
	Incorrectly mounted front cover				O	
Flywheel housing	Defective rear oil seal				O	
	Incorrectly mounted gasket				O	
Weakened regulator valve spring				O		
Defective piston cooling oil jet(s)			O			
Oil working its way up into combustion chamber(s) through piston rings					O	Gr11
Oil working its way down into combustion chamber(s) through valves					O	
Too high oil viscosity		O				
Poor oil quality			O			
Deterioration of oil			O			
Excess of oil					O	
Fuel mixed with oil			O			

ON-VEHICLE INSPECTION AND ADJUSTMENT

1. Oil Filter Replacement

Tightening torque (Unit: N·m {ft.lbs, kgf·m})

Mark	Parts to be tightened	Tightening torque	Remarks
–	Oil filter drain plug	7.8 ± 2.0 {5.8 ± 1.5, 0.8 ± 0.2}	–

Lubricant and/or sealant

Mark	Points of application	Specified lubricant and/or sealant	Quantity
–	Oil filter	Engine oil API classification CJ-4	Approx. 2.3 L {2.4 qts}

Special tools

Mark	Tool name and shape	Part No.	Application
a	Oil filter wrench 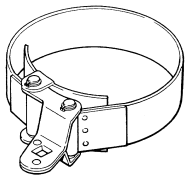 01503	MH061537	Removal of oil filter

WARNING ⚠

- **Wipe up any spilled engine oil, as it can cause fires.**

CAUTION ⚠

- **Make sure not to put any engine oil on the belt when working on the oil filter. Belts soiled with oil or grease may easily slip, resulting in deteriorated performance of the cooling system.**

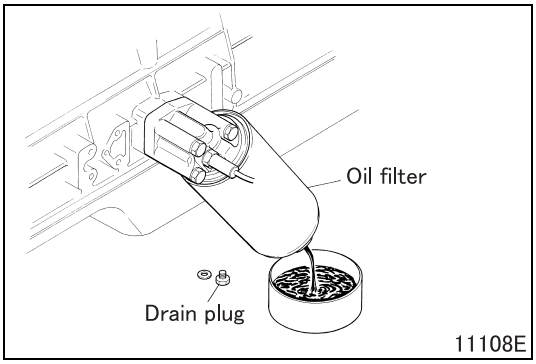

11108E

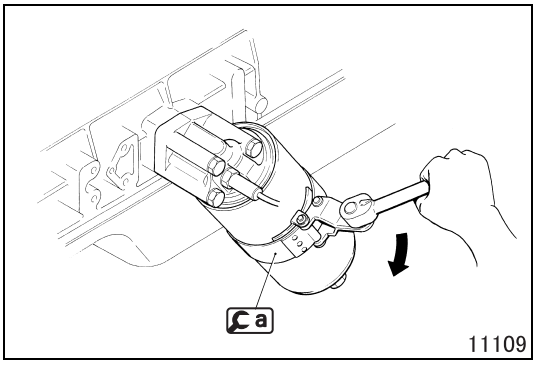

11109

[Removal]

- Remove the drain plug and drain the oil out of the oil filter.

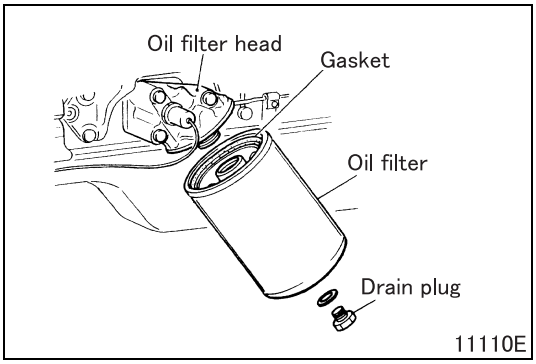

[Installation]

- Clean the surface of the oil filter head where the oil filter is to be mounted.
- Apply a thin coat of engine oil onto the oil filter gasket.
- Screw in the oil filter by hand until the gasket contacts the oil filter head. Tighten further by 1 1/8 to 1 3/8 of a turn.
- Install the drain plug.
- With the oil filter installed, start the engine and ensure that there is no oil leakage through the gasket.
- If oil is leaking, remove and reinstall the oil filter.
- Stop the engine and check the engine oil level.
- Add engine oil if the engine oil level is low.

2. Engine Oil Replacement

Tightening torque (Unit: N·m {ft.lbs, kgf·m})

Mark	Parts to be tightened	Tightening torque	Remarks
–	Drain plug (oil filter)	7.8 ± 2.0 {5.8 ± 1.5, 0.8 ± 0.2}	–
–	Drain plug (oil pan)	69 {51, 7}	–

Lubricant and/or sealant

Mark	Points of application	Specified lubricant and/or sealant	Quantity
–	Oil filter	Engine oil API classification CJ-4	Approx. 2.3 L {2.4 qts}
–	Oil pan		Approx. 11 L {12 qts}

WARNING ⚠

- **Wipe up any spilled engine oil, as it can cause fires.**

CAUTION ⚠

- **Make sure not to put any engine oil on the belt when working on the oil filter. Belts soiled with oil or grease may easily slip, resulting in deteriorated performance of the cooling system.**

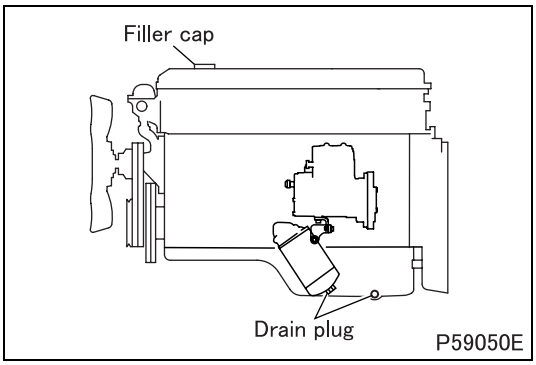

[Draining]

- Remove the filler cap.
- Remove the drain plugs of the oil filter or oil pan to drain out the engine oil.

[Refilling]

- Tighten the drain plug to the specified torque, then pour a specified amount of new engine oil into the engine.
- Stop the engine and check the engine oil level.
- Add engine oil if the engine oil level is low.

CAUTION ⚠

- **Do not add engine oil too much. An excessive oil level can only lead to increased oil consumption or make the positive crankcase ventilation system less efficient.**

3. Engine Oil Level Inspection

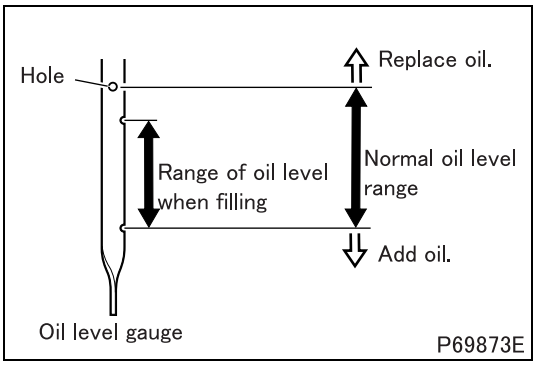

- When regenerating the DPF (diesel particulate filter), a part of the injected fuel may mix into the engine oil and may increase the quantity of oil.
- If the oil level is out of the normal range, add or replace the engine oil.

CAUTION ⚠

- **If the engine oil level exceeds the hole on the oil level gauge, replace the engine oil immediately as the oil has deteriorated and may cause seizure.**

- If remarkable increase of the engine oil is observed, check the following even the oil level is within the normal range.
  - Seizure of piston ring and piston
  - Excessive clearance between piston and cylinder liner

4. Oil Pressure Measurement

Service standards

Location	Maintenance item		Standard value	Limit	Remedy
–	Oil pressure (oil temperature at 70 to 90°C, {158 to 194°F})	No-load minimum speed	145 to 295 kPa {21 to 43 psi, 1.5 to 3 kgf/cm^2}	49 kPa {7.1 psi, 0.5 kgf/cm^2}	Inspect
		No-load maximum speed	295 to 490 kPa {43 to 71 psi, 3 to 5 kgf/cm^2}	195 kPa {28 psi, 2 kgf/cm^2}	

Tightening torque (Unit: N·m {ft.lbs, kgf·m})

Mark	Parts to be tightened	Tightening torque	Remarks
–	Engine oil pressure switch	15 to 22 {11 to 16, 1.5 to 2.2}	Sealant With cold engine

Lubricant and/or sealant

Mark	Points of application	Specified lubricant and/or sealant	Quantity
–	Engine oil pressure switch threads	Teflon tape	3 1/2 turns

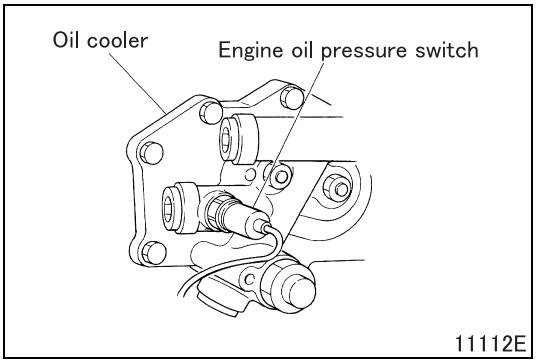

- Remove the engine oil pressure switch.

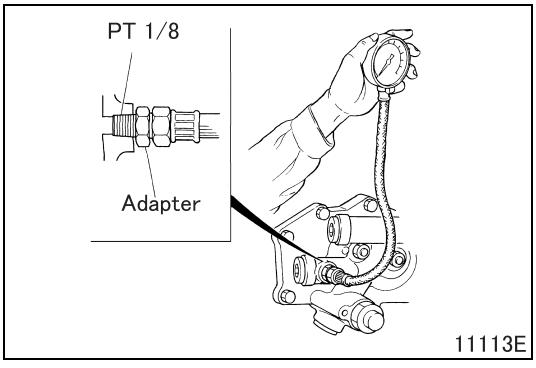

- Using an adapter, connect an oil pressure gauge to the engine oil pressure switch mounting hole.
- Warm up the engine until the oil temperature reaches 70 to 90°C {158 to 194°F}.
- Measure the oil pressure while running the engine at a minimum speed and then at maximum speed, both under no load.
- If the measurements are below the specified limits, overhaul the lubrication system.
- After taking the measurements, wrap the threads of the engine oil pressure switch with teflon tape and then tighten the switch to the specified torque.

CAUTION ⚠

- **Reinstall the oil pressure switch only when the engine is cold.**

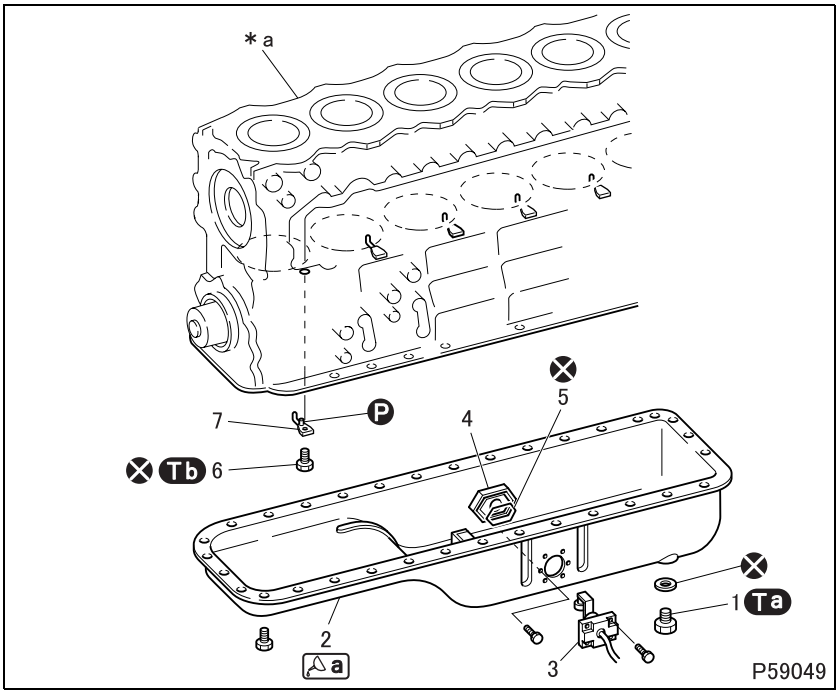

● **Disassembly sequence**

1. Drain plug
2. Oil pan
3. Engine oil level sensor
4. Retainer
5. O-ring
6. Check valve
7. Oil jet

***a**: Crankcase
Ⓟ: Locating pin
⊗: Non-reusable parts

● **Assembly sequence**

Follow the disassembly sequence in reverse.

CAUTION ⚠

- **If overtightened, the check valve will not operate properly, leading to engine seizure. Be sure to tighten the check valve to the specified torque.**

The oil pan shown in the illustration is designed for the FK model.

Tightening torque (Unit: N·m {ft.lbs, kgf·m})

Mark	Parts to be tightened	Tightening torque	Remarks
Ta	Drain plug	69 {51, 7}	–
Tb	Check valve	34 {25, 3.5}	–

Lubricant and/or sealant

Mark	Points of application	Specified lubricant and/or sealant	Quantity
a	Crankcase mounting surface of oil pan	ThreeBond 1217H	As required

◆Installation procedure◆

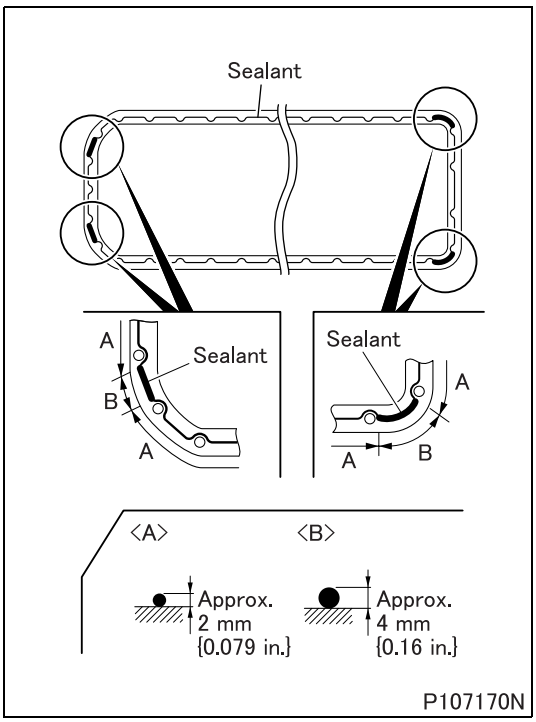

■ **Installation: Oil pan**

- Clean the mating surfaces of each part.
- Apply a bead of sealant to the mating surface of the oil pan evenly and without any breaks.
- Apply amount B of the sealant to the 4 corners and amount A to the other places as shown in the illustration.
- Mount the oil pan within three minutes of applying the sealant. Make sure that the sealant stays in place.

CAUTION ⚠

- **Do not start the engine less than an hour after installation. If the oil pan mounting bolts were loosened or removed, be sure to reapply sealant.**

M E M O

OIL PUMP, OIL STRAINER

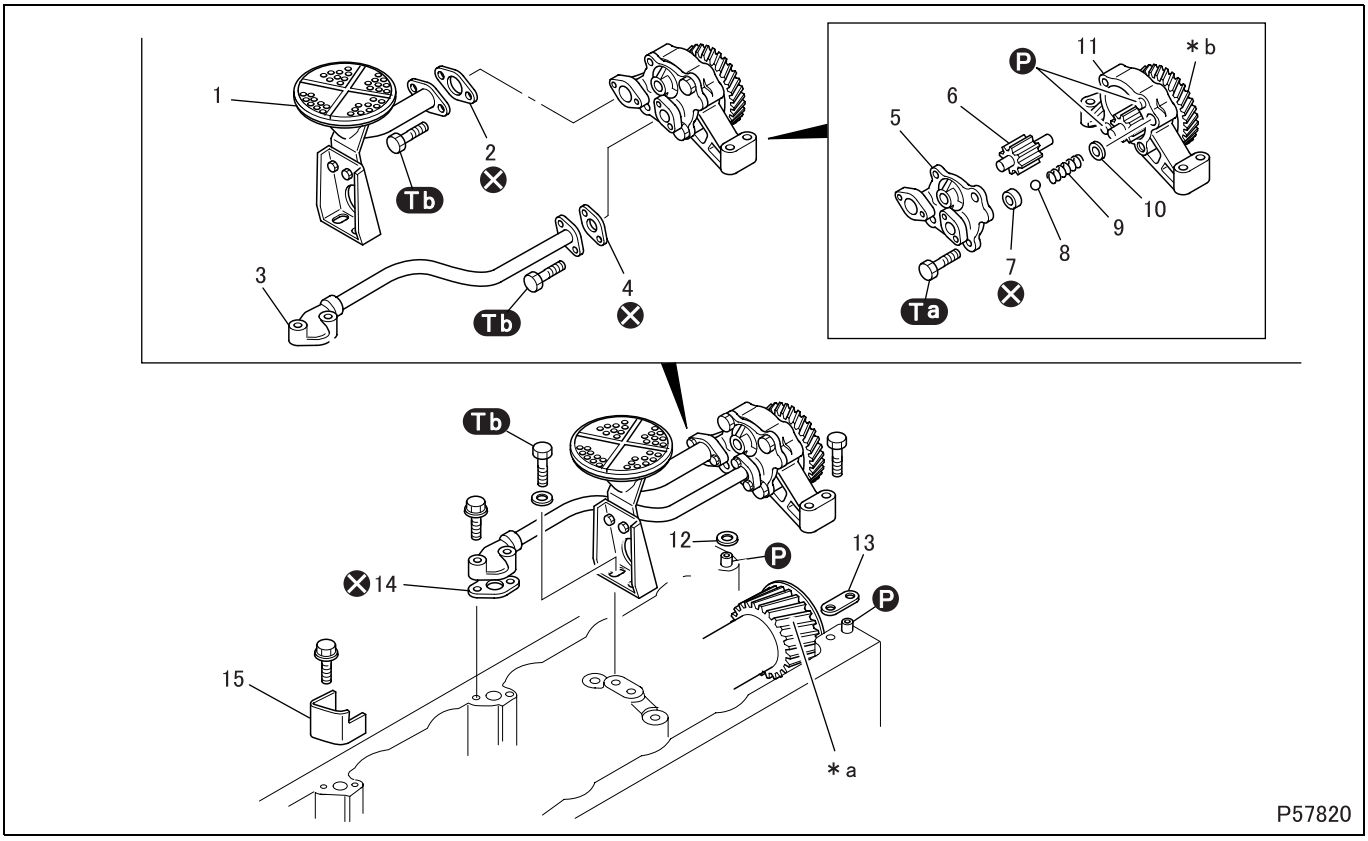

●Disassembly sequence

1 Oil strainer
2 Gasket
3 Oil pipe
4 Gasket
5 Cover
6 Driven gear
7 Ring
8 Relief valve
9 Relief valve spring
10 Washer
11 Gear and case
12 Shim
13 Shim
14 Gasket
15 Oil deflector

***a**: Crankshaft gear
***b**: Oil pump gear

Ⓟ: Locating pin
⊗: Non-reusable parts

- The oil strainer, the oil pipe and the oil pump must all be removed together as an assembly. Do not remove the oil strainer or the oil pipe separately from the oil pump unless they are defective.
- Do not disassemble the oil pump unless defects are evident.
- The gear and case assembly is not serviceable. If the gear and case assembly appears defective, replace it.

●Assembly sequence

Follow the disassembly procedure in reverse.

Service standards (Unit: mm {in.})

Location	Maintenance item	Standard value	Limit	Remedy
5, 11	Clearance between drive gear shaft and cover	0.04 to 0.07 {0.0016 to 0.0028}	0.15 {0.0059}	Replace
5, 6, 11	Clearance between driven gear shaft and case, and that between the shaft and cover	0.04 to 0.07 {0.0016 to 0.0028}	0.15 {0.0059}	Replace
6, 11	Clearance between case and tooth tips of each gear	0.10 to 0.19 {0.0039 to 0.0075}	0.2 {0.0079}	Replace
	Difference between case depth and height of each gear	0.06 to 0.11 {0.0024 to 0.0043}	0.15 {0.0059}	

Location	Maintenance item	Standard value	Limit	Remedy
8	Relief valve opening pressure	1.1 ± 0.1 MPa {160 ± 15 psi, 11 ± 1 kgf/cm^2}	–	Replace
9	Relief valve spring installed load (installed length: 30 {1.18})	84 N {19 lbs, 8.6 kgf}	–	Replace
***a, *b**	Backlash between crankshaft gear and oil pump gear	0.073 to 0.14 {0.0029 to 0.0055}	0.35 {0.0014}	Adjust

Tightening torque (Unit: N·m {ft.lbs, kgf·m})

Mark	Parts to be tightened	Tightening torque	Remarks
Ta	Bolt (oil pump cover mounting)	25 ± 4.9 {18 ± 3.6, 2.5 ± 0.5}	–
Tb	Bolt (oil strainer, oil pipe mounting)	24 {18, 2.4}	–

◆Inspection before removal◆

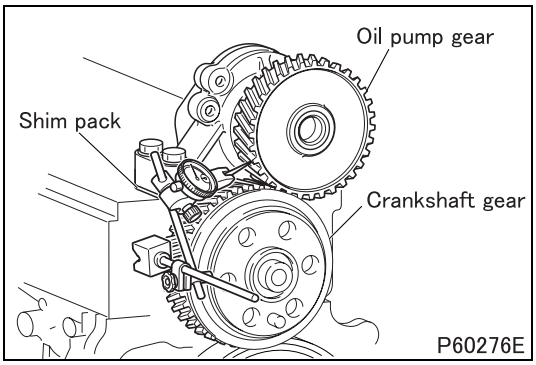

■ Inspection: Backlash between oil pump gear and crankshaft gear

- If the measurement exceeds the limit, adjust by shimming.

Shim thickness	Change in backlash
0.1 mm {0.0039 in.}	0.073 mm {0.0029 in.}
0.2 mm {0.0079 in.}	0.146 mm {0.0057 in.}

CAUTION ⚠

- **Perform shimming such that the shim packs on both sides will have the same thickness.**

◆Inspection procedure◆

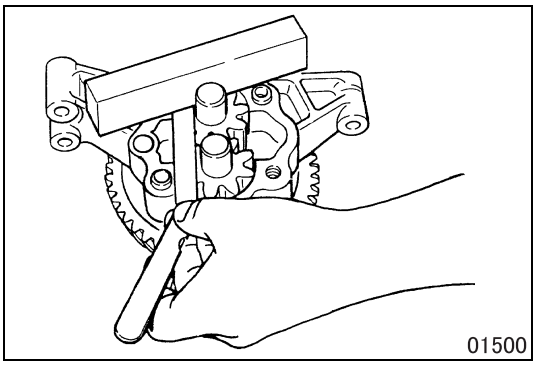

■ Inspection: Driven gear, gear and case assembly

- Perform the following inspections. Replace the defective part(s) as required.

(1) Difference between case depth and height of each gear

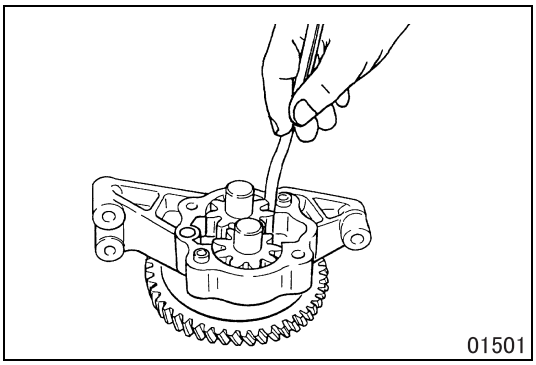

(2) Clearance between case and tooth tips of each gear

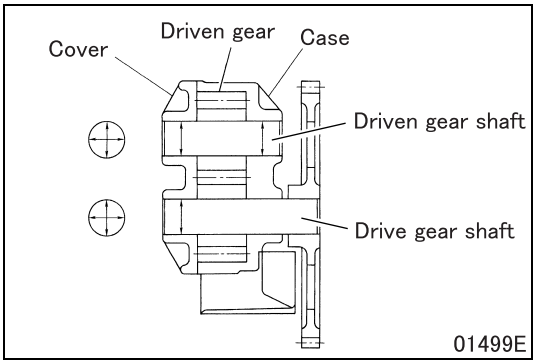

(3) Clearance between drive gear shaft and cover

(4) Clearance between driven gear shaft and case, and that between the shaft and cover

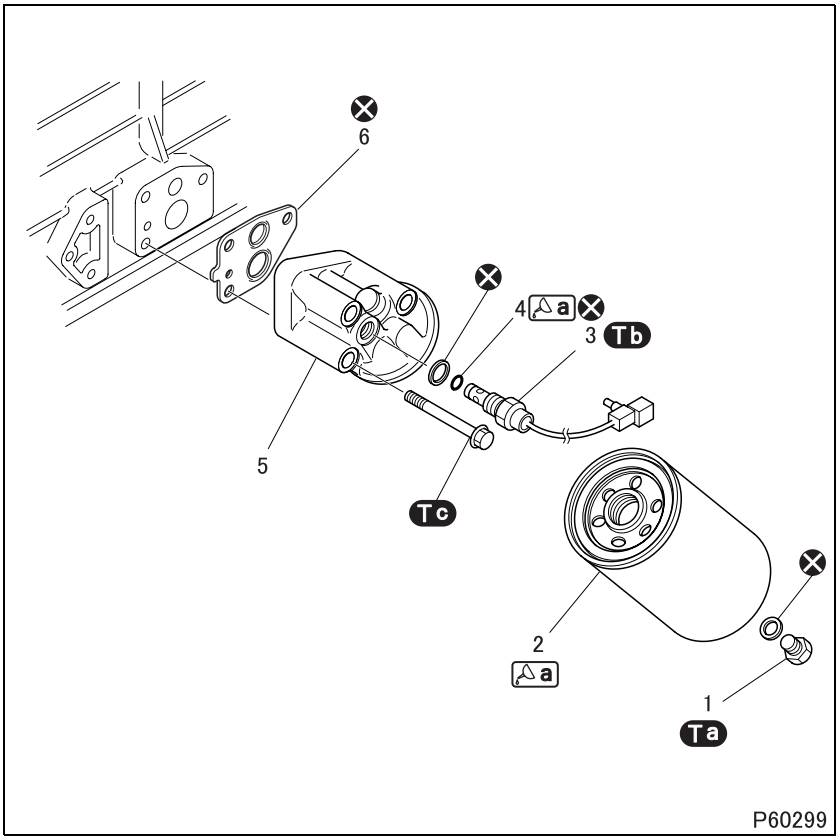

● **Removal sequence**

1 Drain plug
2 Oil filter
3 Engine oil bypass alarm switch
4 O-ring
5 Oil filter head
6 Gasket

⊗: Non-reusable parts

● **Installation sequence**

Follow the removal sequence in reverse.

WARNING ⚠

- **Wipe up any spilled engine oil, as it can cause fires.**
- **To avoid any risk of burns, take care not to touch the engine oil when the engine is hot.**

CAUTION ⚠

- **When adding engine oil, be careful not to allow engine oil to smear the belt. A belt smeared with oil will slip, resulting in reduced cooling efficiency.**

Tightening torque (Unit: N·m {ft.lbs, kgf·m})

Mark	Parts to be tightened	Tightening torque	Remarks
Ta	Drain plug	7.8 ± 2 {5.8 ± 1.5, 0.8 ± 0.2}	–
Tb	Engine oil bypass alarm switch	49 ± 4.9 {36 ± 3.6, 5.0 ± 0.5}	–
Tc	Bolt (oil filter head mounting)	46 {34, 4.7}	–

Lubricant and/or sealant

Mark	Points of application	Specified lubricant and/or sealant	Quantity
a	Oil filter gasket	Engine oil	As required
	O-ring		

OIL COOLER

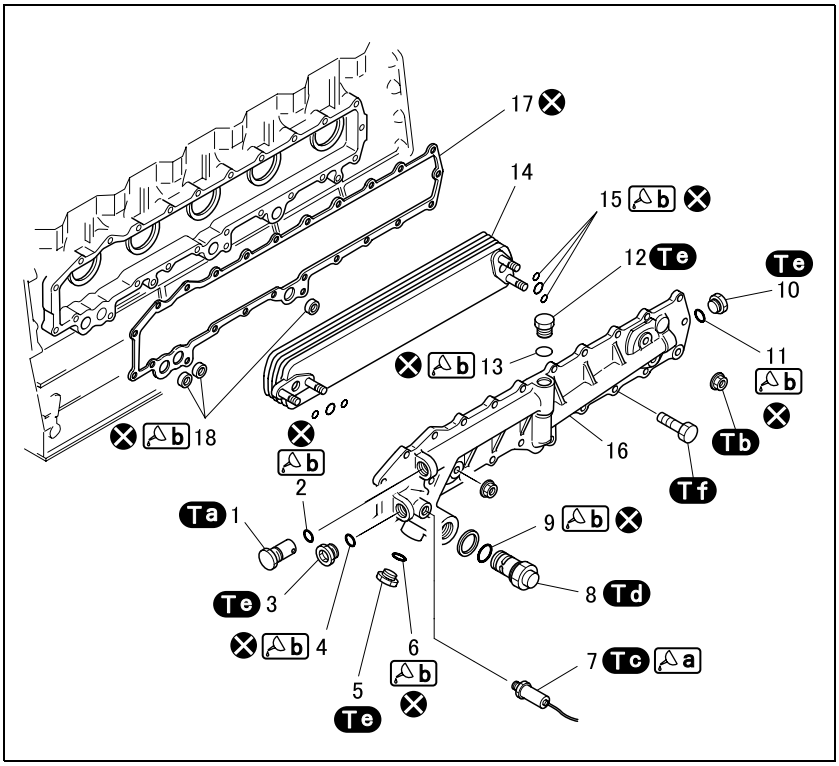

● **Removal sequence**

1 Bypass valve
2 O-ring
3 Plug
4 O-ring
5 Plug
6 O-ring
7 Engine oil pressure switch
8 Regulator valve
9 O-ring
10 Plug
11 O-ring
12 Plug
13 O-ring
14 Oil cooler element
15 O-ring
16 Oil cooler cover
17 Gasket
18 O-ring

⊗: Non-reusable parts

● **Installation sequence**

Follow the removal sequence in reverse.

Service standards (Unit: mm)

Location	Maintenance item	Standard value	Limit	Remedy
14	Air leakage from oil cooler element (air pressure: 1470 kPa {215 psi, 15 kgf/cm^2})	0 cm^3 {0 cu.in}	–	Replace

Tightening torque (Unit: N·m {ft.lbs, kgf·m})

Mark	Parts to be tightened	Tightening torque	Remarks
Ta	Bypass valve	15 to 20 {11 to 15, 1.5 to 2.0}	–
Tb	Nut (oil cooler element mounting)	24.5 to 32.3 {18 to 24, 2.5 to 3.3}	–
Tc	Engine oil pressure switch	15 to 22 {11 to 16, 1.5 to 2.2}	–
Td	Regulator valve	98 to 118 {72 to 87, 10 to 12}	–
Te	Plug	14.7 to 19.6 {11 to 14, 1.5 to 2.0}	–
Tf	Bolt (oil cooler mounting)	24 {18, 2.4}	–

Lubricant and/or sealant

Mark	Points of application	Lubricant and/or sealant	Quantity
a	Engine oil pressure switch threads	Teflon tape	3 1/2 turns
b	O-ring	Engine oil	As required

◆Inspection procedure◆

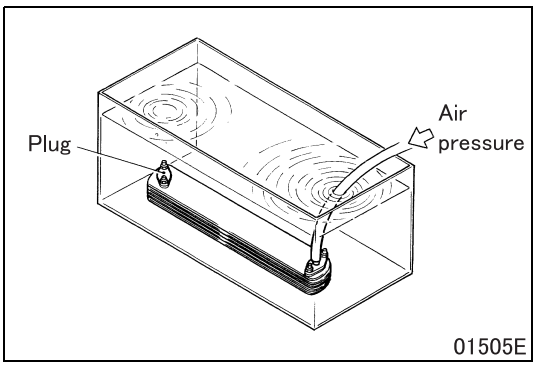

■ Inspection: Oil cooler element

- Plug the outlet of the oil cooler element and connect a hose to the engine oil inlet port. Then, immerse the oil cooler element in a tank of water.
- Apply a specified air pressure for 15 seconds through the hose, and check for any air leaks.
- Replace the element if it leaks air.

REGULATOR VALVE

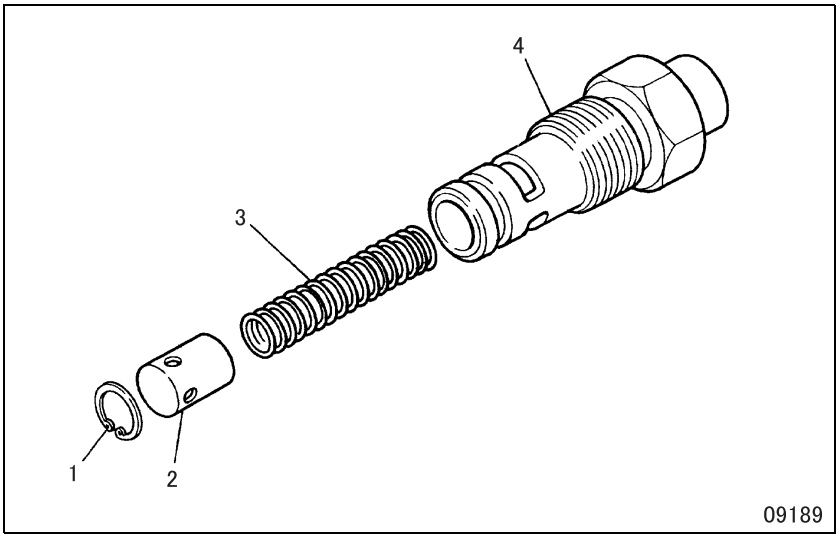

● **Disassembly sequence**

1 Snap ring
2 Valve
3 Spring
4 Body

● **Assembly sequence**

Follow the disassembly sequence in reverse.

Service standards (Unit: mm {in.})

Location	Maintenance item	Standard value	Limit	Remedy
–	Regulator valve opening pressure	392 ± 29 kPa {57 ± 4.2 psi, 4.0 ± 0.3 kgf/cm^2}	–	Replace
3	Spring installed load (installed length 48.3 {1.90})	78.5 ± 1.96 N {18 ± 0.4 lbs, 8.0 ± 0.2 kgf}	–	Replace

Group 13A

Fuel and Engine Control

Table of Contents

Back

Home

MITSUBISHI FUSO TRUCK OF AMERICA, Inc.

Pub.No.TWME0806-13A

INDEX

SPECIFICATIONS 13A-2

STRUCTURE AND OPERATION
1. **Fuel System (Flow of Fuel) 13A-3**
2. **Engine Control 13A-4**
3. **Fuel Filter 13A-5**

TROUBLESHOOTING 13A-6

ON-VEHICLE INSPECTION AND ADJUSTMENT
1. **Inspecting No-load and Maximum Speeds 13A-8**
2. **Air-bleeding of Fuel System 13A-9**
3. **Fuel Filter Replacement 13A-10**

FUEL TANK 13A-12

FUEL FILTER 13A-13

ENGINE CONTROL 13A-16

COMMON RAIL 13A-22

SUPPLY PUMP 13A-24

INJECTOR 13A-26

SPECIFICATIONS

Item		Specifications
Supply pump	Manufacturer	DENSO
	Control system	Electronically-controlled pump
	Type	HP-4
	Feed pump type	Trochoid pump
Common rail system	Manufacturer	DENSO
	Common rail capacity cm^3 {cu. in}	26 {1.56}
	Pressure limiter valve opening pressure MPa {psi, kgf/cm^2}	221 ± 9 {32050 ± 1310, 2253 ± 92}
	Common rail pressure sensor supply voltage V	5
Injector	Manufacturer	DENSO
	Control system	Electronically controlled
	Maximum injection pressure MPa {psi, kgf/cm^2}	170 {24890, 1750}

1. Fuel System (Flow of Fuel)

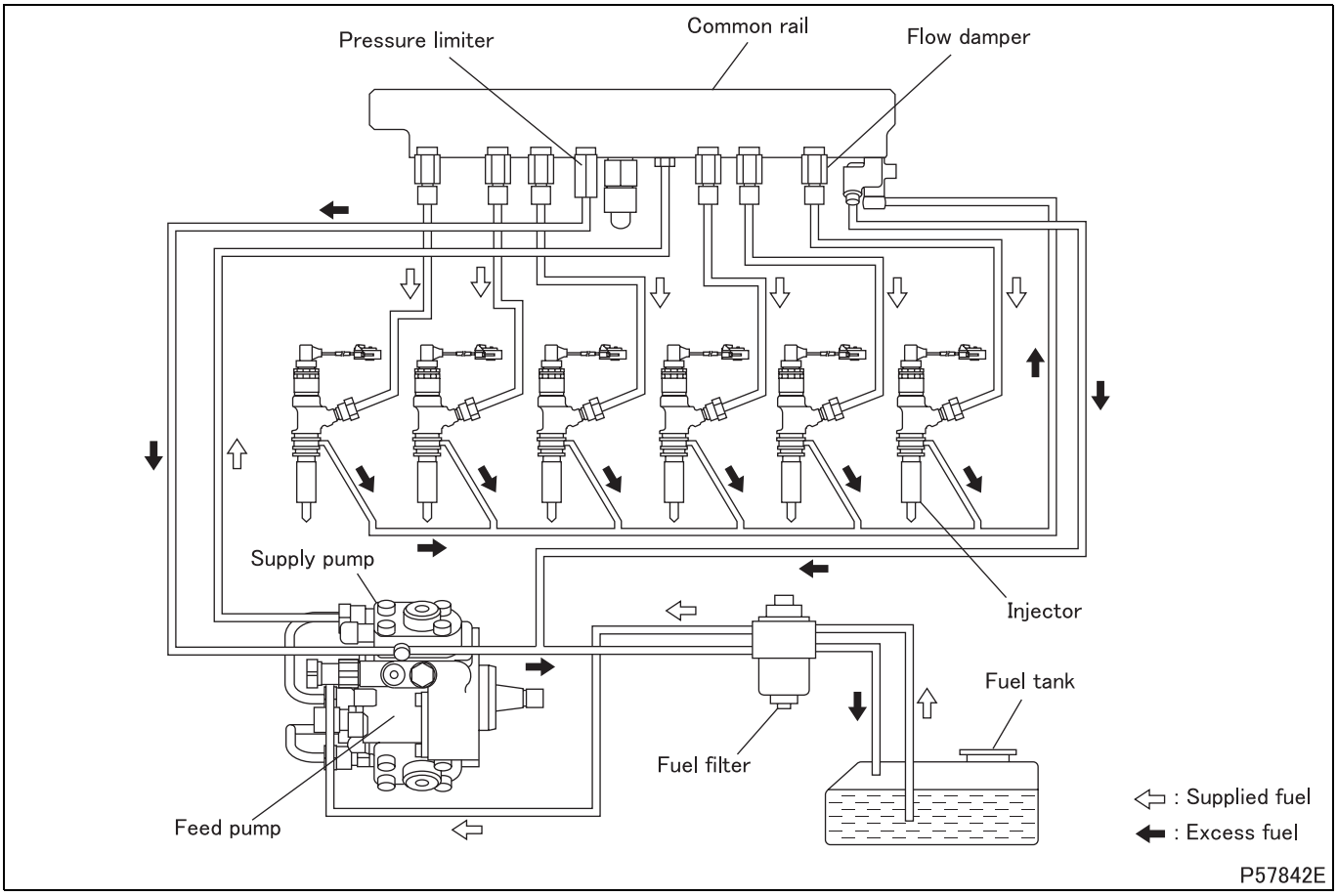

- Fuel in the fuel tank is sucked up by the feed pump, which is driven by the pump camshaft within the supply pump, and is fed through the fuel filter where foreign matter is filtered out.
- The filtered fuel is sent to the supply pump where it is pressurized, and then is accumulated in the common rail. The accumulated fuel is then delivered through the injectors into the combustion chambers.
- If fuel leakage occurs through any of the fuel line connections between the common rail and injectors, the relevant flow damper(s) will close, shutting off fuel supply and thus preventing any further fuel leakage out of the system.
- If the pressure of fuel in the common rail rises above the specified level, the pressure limiter valve opens to allow fuel to return to the fuel tank.
- If the pressure of fuel in the supply pump rises above the specified limit, fuel is allowed to returned to the fuel tank.

2. Engine Control

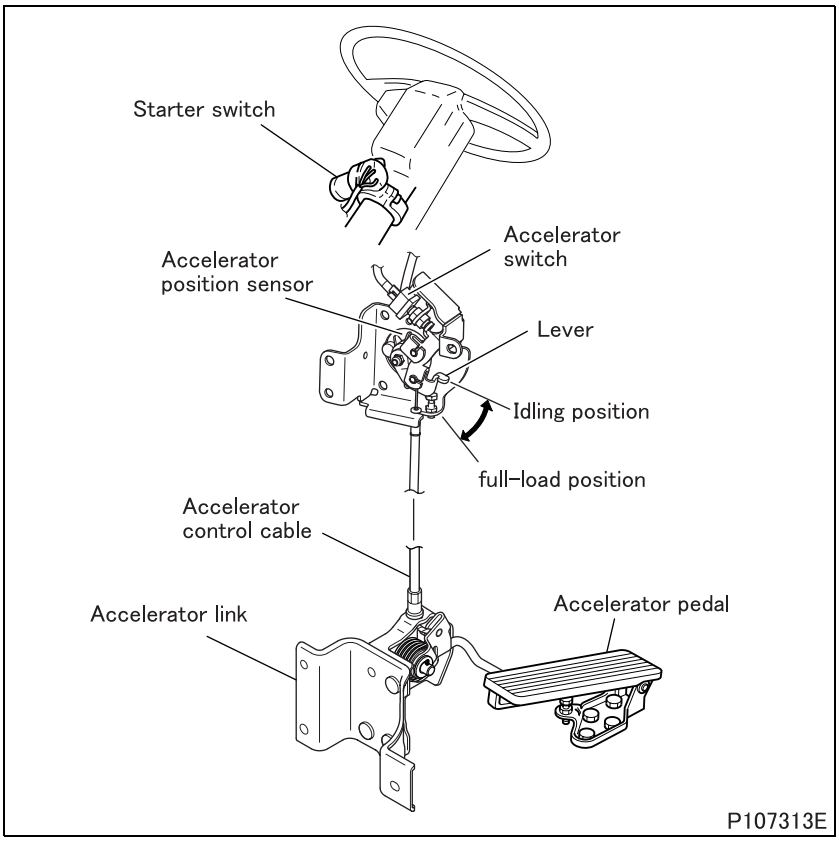

2.1 Accelerator switch

- The accelerator pedal switch is used to monitor whether or not the accelerator pedal is pressed.

2.2 Accelerator position sensor

- The accelerator position sensor monitors for change in the position of the accelerator pedal and sends relevant electric signals to the common rail electronic control unit. The lever is constantly pulled towards the idling position by a return spring.

3. Fuel Filter

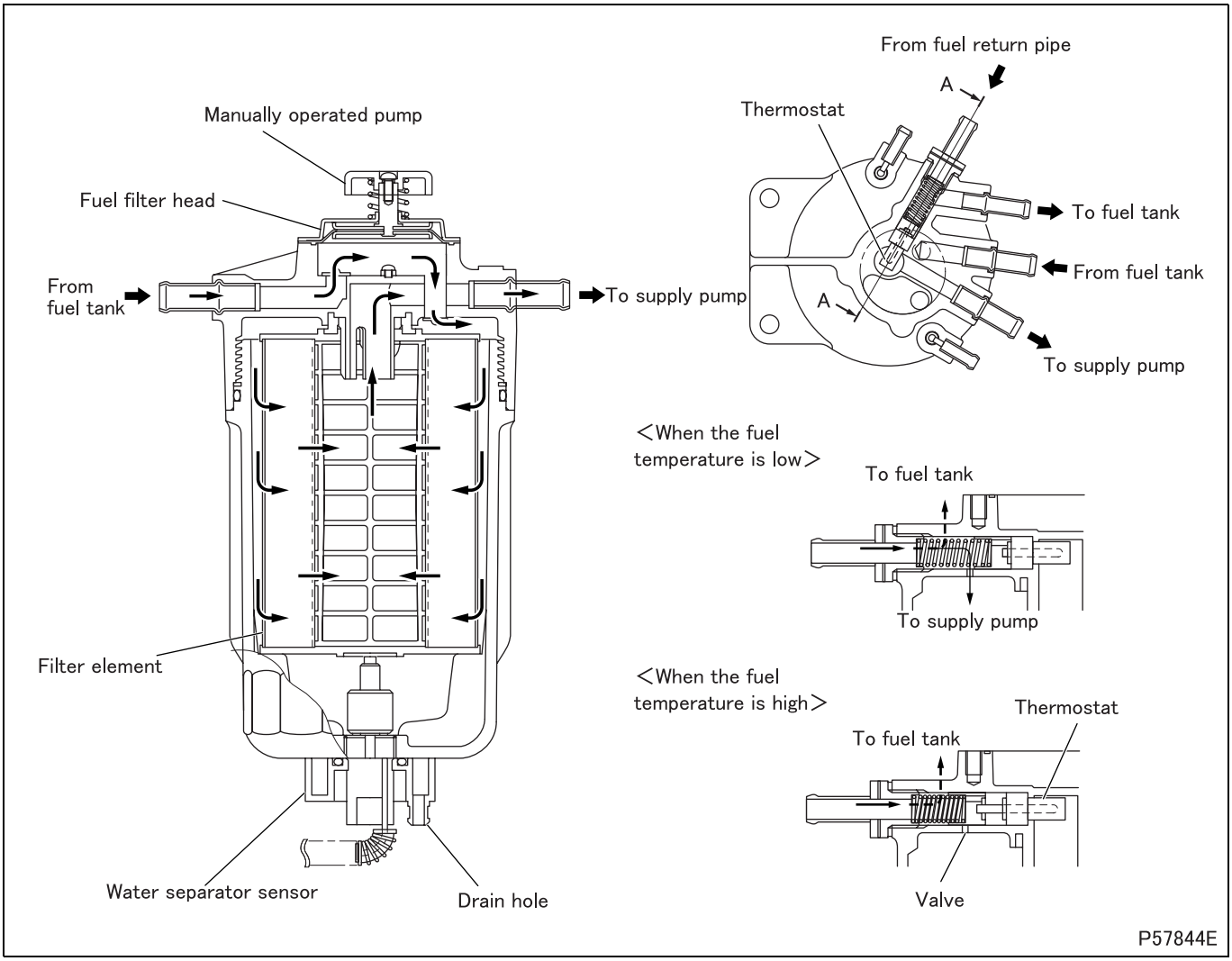

- The fuel filter removes foreign matter from fuel via the filter element. The fuel filter also incorporates a water separator which separates any water from fuel.
- Water separated from fuel accumulates at the bottom of the fuel filter assembly. When water has accumulated to a certain level, this is detected by the water separator sensor, provided on the fuel filter assembly, which then illuminates a warning lamp on the meter cluster.
- The water which has collected in the water separator can be drained through the drain hole by loosening the water separator sensor.
- To bleed air from the fuel system, a manually operated pump is provided on the fuel filter head.
- When fuel is hot, the thermostat expands, closing the valve in the fuel filter head. As a result, the entire amount of hot fuel returning from the fuel return pipe is directed straight on to the fuel tank.
- When fuel is cold, the thermostat will not expand, leaving open the valve in the fuel filter head. As a result, hot fuel returning from the fuel return pipe flows through the valve and mixes with, and warms up, the fuel in the outer periphery of the filter element. This melts any paraffin that may have precipitated in the cold fuel, thus preventing the filter element from clogging up.

Possible causes \ Symptoms		Engine does not start	Engine hard to start	Excessive black smoke	Engine output inconsistent	Engine maximum speed too high	Engine idling unstable	Engine stalls immediately after start	Engine does not reach maximum speed	Fuel supply insufficient	Warning lamp illuminates	Reference Gr
Common rail system abnormal											O	Gr13EA
Supply pump	Defective feed pump	O	O		O			O	O	O		*
	Incorrect pump output	O	O		O			O	O			*
	Defective pressurized-fuel delivery system	O	O		O			O	O			*
	Defective SCV; Defective base supply pump	O	O		O			O	O			*
	SCV open-circuited, short, or intermittent connection	O	O		O			O	O		O	Gr13EA or *
	Defective sealing		O		O				O			*
Common rail	Pressure limiter valve opening pressure too low		O	O	O				O			
	Operation of flow damper		O		O							
	Common rail pressure sensor circuit open, short, or intermittent connection	O	O		O			O	O		O	Gr13EA
	Defective sealing		O	O	O				O			
Incorrect injector fuel injection	Injector magnetic valve open-circuited, short, or intermittent connection		O	O	O	O	O				O	Gr13EA or *
	Defective injector, injector magnetic valve, or injection nozzle		O	O	O	O	O		O			*
	Orifice clogged			O		O	O					
Fuel filter clogged		O	O		O		O	O	O	O		
No fuel in fuel tank		O	O		O			O	O	O		
High-pressure piping	Defective sealing or sealing surface		O		O			O	O			
	Piping cracked		O		O			O	O			
	Piping crushed and restricted		O		O			O	O			
	Foreign matter stuck in piping		O		O			O	O			
Low-pressure piping	Defective sealing or sealing surface	O	O		O			O	O	O		
	Piping cracked or clogged	O	O		O			O	O	O		
Air or water in fuel system			O		O		O	O	O	O		
Poor quality fuel is used			O	O	O	O		O	O			
Engine control	Incorrectly adjusted accelerator pedal stopper bolt				O				O			
	Defective accelerator position sensor										O	Gr13EA

SCV: Suction Control Valve

*: Contact DENSO Service Station for repair.

Possible causes \ Symptoms		Engine does not start	Engine hard to start	Excessive black smoke	Engine output inconsistent	Engine maximum speed too high	Engine idling unstable	Engine stalls immediately after start	Engine does not reach maximum speed	Fuel supply insufficient	Warning lamp illuminates	Reference Gr
Oil viscosity unsuitable			O		O							Gr12
Valve clearance incorrect			O		O							Gr11
Defective cylinder head gasket			O		O							
Valve and valve seat worn and carbon deposits			O		O							
Valve spring fatigued			O		O							
Piston ring worn and damaged			O		O							
Piston ring groove worn and damaged			O									
Piston and cylinder liner worn			O		O							
Crankshaft incorrectly sized			O	O	O			O				
Cooling system malfunction			O		O							Gr14
Defective starter switch		O	O		O			O				Gr54
Defective glow relay		O	O									
Engine speed sensor; Cylinder recognition sensor	Defective sensor; Sensor open-circuited, short, or intermittent connection		O	O	O			O	O		O	Gr13EA
	Each sensor improperly mounted		O	O	O			O	O			Gr11
Defective boost pressure sensor; Boost pressure sensor open-circuited, short or intermittent connection				O	O						O	Gr13EA
Defective coolant temperature sensor; Coolant temperature sensor open-circuited, short, or intermittent connection		O	O								O	
Defective fuel injection volume adjusting resistor; Resistor open-circuited, short, or intermittent connection				O	O						O	
Defective idling speed adjustment knob; Idling speed adjustment knob open-circuited, short or intermittent connection							O				O	
Defective electronic control unit main power relay; Relay open-circuited, short or intermittent connection		O	O					O				
Engine electronic control unit	Defective electronic control unit	O	O	O	O	O		O	O		O	
	Not yet initialized for supply pump unit difference		O		O			O	O			
Dead battery		O	O		O			O				Gr54
Alternator malfunction			O		O			O				
Blown fuse		O	O					O				

ON-VEHICLE INSPECTION AND ADJUSTMENT

1. Inspecting No-load Minimum and Maximum Speeds

Service standards

Location	Maintenance item	Standard value	Limit	Remedy
–	No-load minimum speed (idling speed)	600 ± 25 rpm	–	Inspect
–	No-load maximum speed	3210 ± 30 rpm	–	Inspect

[Work before inspection]

- Before starting the inspection and adjustment, carry out the following preparatory steps:
- Warm up the engine until the engine coolant temperature is approximately 80 to 95°C {176 to 203°F};
- Turn off all lamps and accessories;
- Put the transmission in neutral (Put the automatic transmission in P range.)
- Turn the steering wheel in neutral position.
- Set the tachometer.

[Inspection]

(1) No-load minimum speed

- With the accelerator pedal released, measure the engine speed.
- If the measurement deviates from the standard value, check the accelerator position sensor and accelerator switch. (See Gr13EA.)
- If the sensor and switch are found to be normal, check for fuel system diagnosis codes as well as inspecting the supply pump and electronic control unit. (See Gr13EA.)

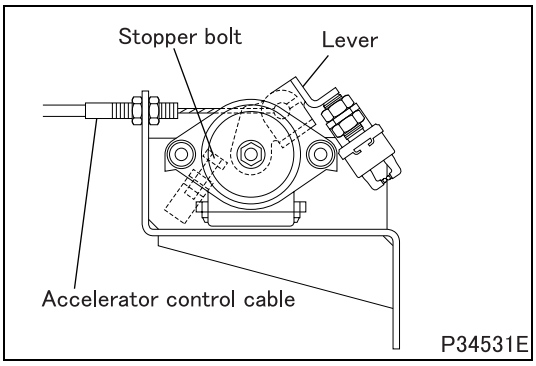

(2) No-load maximum speed

- Fully press the accelerator pedal.
- With the accelerator lever pressed against the stop bolt, measure the engine speed.
- If the measurement deviates from the standard value, check the accelerator position sensor and accelerator switch. (See Gr13EA.)
- If the sensor and switch are found to be normal, check for fuel system diagnosis codes as well as inspecting the supply pump and electronic control unit. (See Gr13EA.)

2. Air-bleeding of Fuel System

Tightening torque (Unit: N·m {ft.lbs, kgf·m})

Mark	Parts to be tightened	Tightening torque	Remarks
–	Plug	10 ± 2 {7.4 ± 1.5, 1 ± 0.2}	–

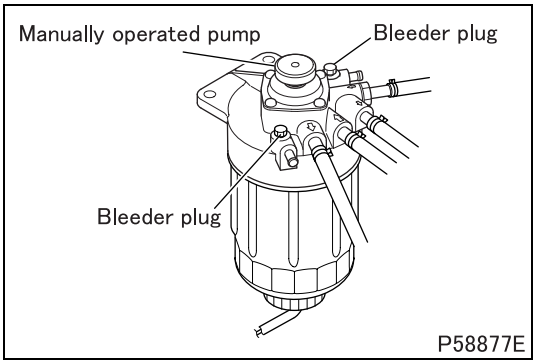

- Loosen one of the bleeder plugs on the fuel filter.
- Feed the system with fuel by manually operating the pump up and down.
- Continue pumping until fuel with no bubbles of air comes out of the bleeder plug.
- With no air bubbles coming out with fuel, tighten the bleeder plug to the specified torque.
- Continue operating the pump until there is strong pumping resistance.

CAUTION ⚠

- **If the fuel is cold, pumping resistance may not become strong. Even if this is the case, be sure to cycle the pump several times.**

- Wipe up all spilled fuel, then start the engine.
- Check that no fuel leakage occurs.

WARNING ⚠

- **Fuel is highly flammable. Keep it away from flames and sources of heat.**
- **Be sure to wipe up all spilled fuel. Unless it is wiped up, it could catch fire.**

3. Fuel Filter Replacement

Tightening torque (Unit: N·m {ft.lbs, kgf·m})

Mark	Parts to be tightened	Tightening torque	Remarks
–	Water separator sensor	5 ± 1 {3.7 ± 0.7, 0.5 ± 0.1}	–
–	Case	30 ± 2 {22 ± 1.5, 3.1 ± 0.2}	–

Lubricant and/or sealant

Location	Points of application	Specified lubricant and/or sealant	Quantity
–	O-ring	Engine oil	As required

Special tools

Mark	Tool name and shape	Part No.	Application
a	Filter wrench 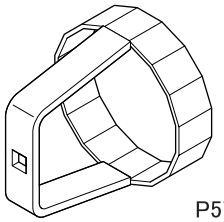 P57179	MH063203	Removal and installation of case

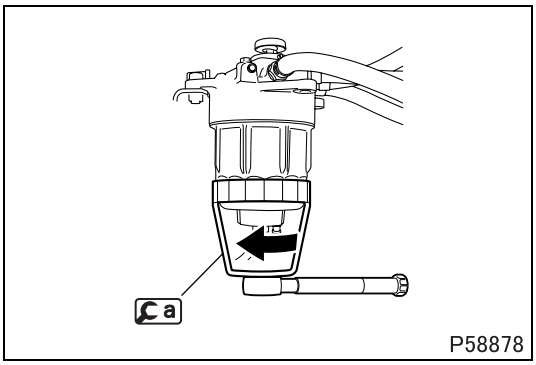

[Removal]

- Drain fuel from the case by loosening the water separator sensor.
- Using a, remove the case.

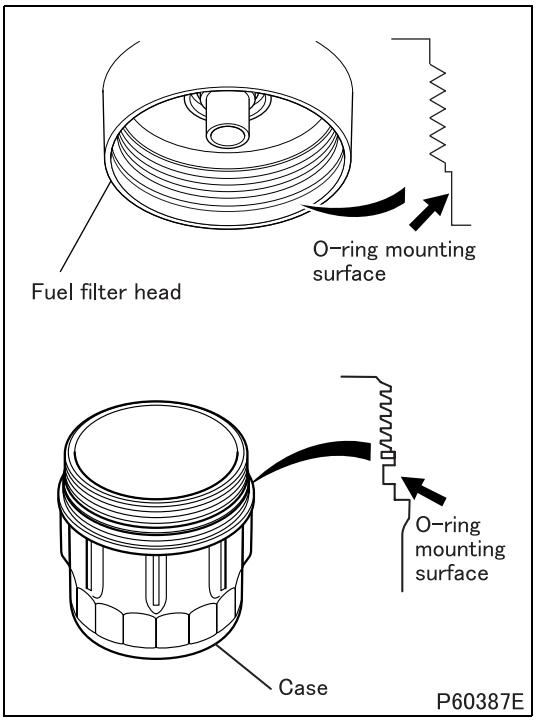

[Installation]

- Clean the surface of the fuel filter head and case where the O-ring is to be mounted.

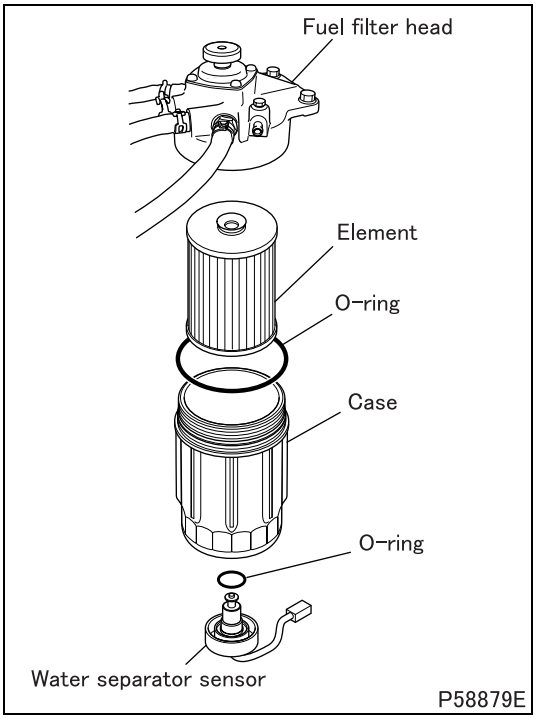

- Replace the filter element and O-rings with new parts.
- Apply a thin coat of engine oil to the O-rings. Install the O-rings onto the case and water separator sensor.

CAUTION ⚠

- **The use of non-genuine filter elements will lead to engine problems. Be sure to use only genuine parts.**
- **To help prevent fuel injection problems, keep the fuel filter and hoses free from contamination.**

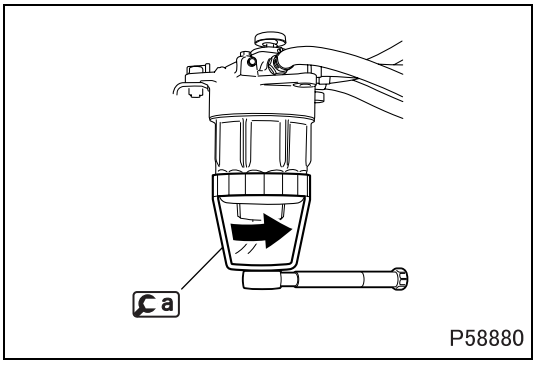

- Using a, tighten the case to the specified torque.
- Tighten the water separator sensor to the specified torque. With the sensor correctly installed, bleed air from the fuel system.
- Start the engine and ensure that there is no fuel leakage.
- If there is fuel leakage, remove and install the fuel filter correctly.

FUEL TANK

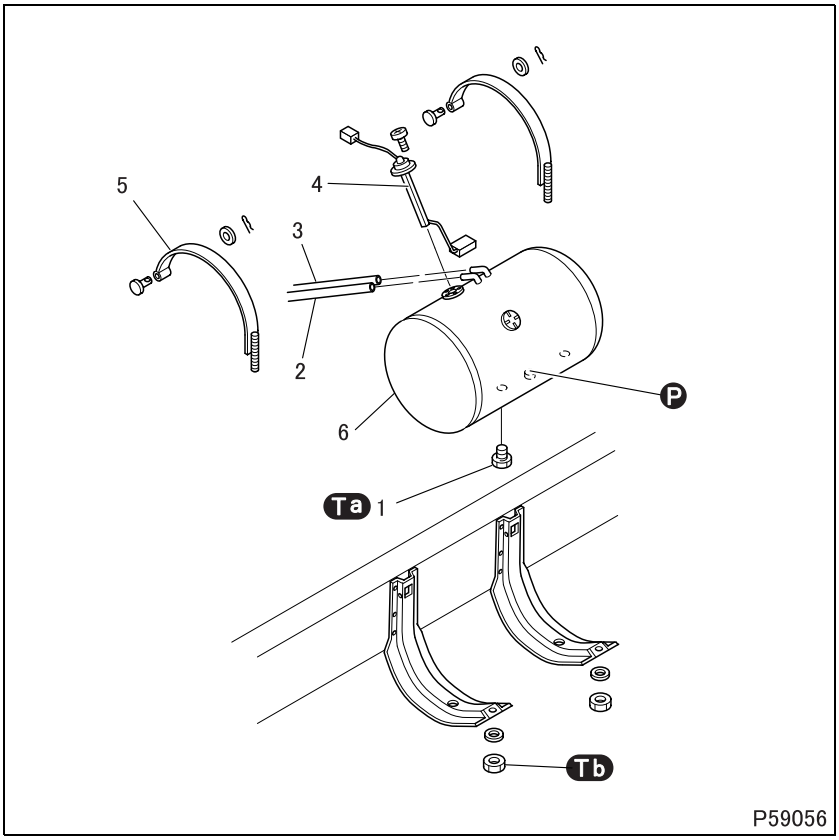

● **Removal sequence**

1 Drain plug
2 Suction hose
3 Return hose
4 Fuel level sensor
5 Fuel tank strap
6 Fuel tank

Ⓟ: Locating pin

● **Installation sequence**

Follow the removal sequence in reverse.

DANGER ⚠

- **Do not allow any flames or sources of heat near the fuel tank, as it may explode.**

WARNING ⚠

- **Fuel is highly flammable. Keep it away from flames and sources of heat.**
- **Thoroughly wipe up any spilled fuel. Otherwise, it may catch fire.**

Tightening torque (Unit: N·m {ft.lbs, kgf·m})

Mark	Parts to be tightened	Tightening torque	Remarks
Ta	Drain plug	78 ± 19 {58 ± 14, 8.0 ± 1.9}	–
Tb	Nut (fuel tank strap mounting)	12 to 15 {8.7 to 11, 1.2 to 1.5}	–

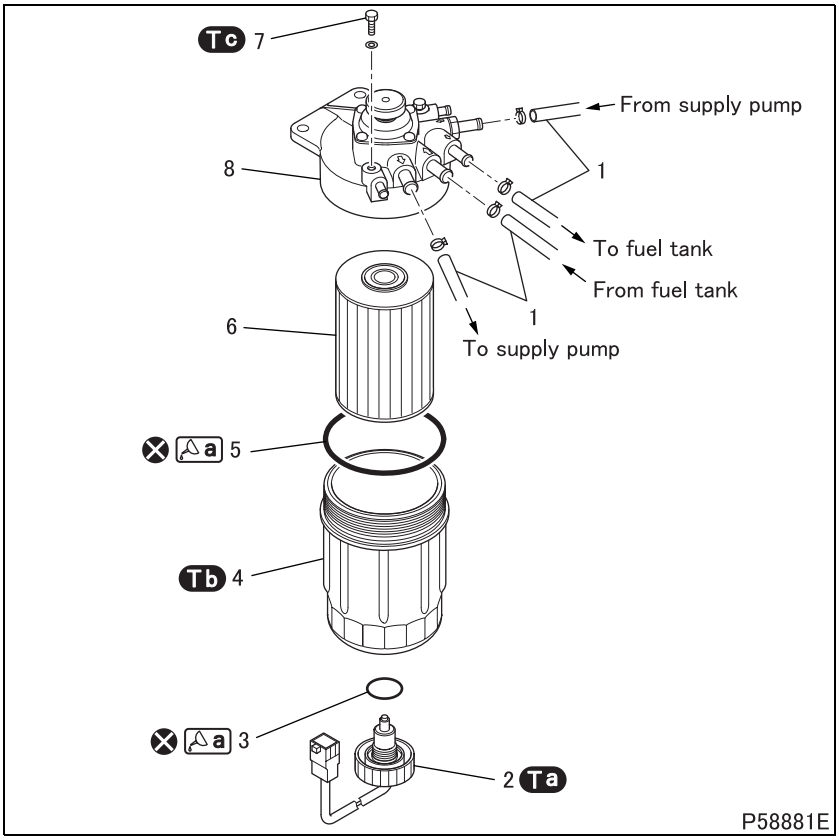

● **Disassembly sequence**

1 Fuel hose
2 Water separator sensor
3 O-ring
4 Case
5 O-ring
6 Element
7 Plug
8 Fuel filter head

⊗: Non-reusable parts

● **Assembly sequence**

Follow the disassembly sequence in reverse.

Tightening torque (Unit: N·m {ft.lbs, kgf·m})

Mark	Parts to be tightened	Tightening torque	Remarks
Ta	Water separator sensor	5 ± 1 {3.7 ± 0.7, 0.5 ± 0.1}	–
Tb	Case	30 ± 2 {22 ± 1.5, 3.1 ± 0.2}	–
Tc	Plug	10 ± 2 {7.4 ± 1.5, 1 ± 0.2}	–

Lubricant and/or sealant

Mark	Points of application	Specified lubricant and/or sealant	Quantity
a	O-ring	Engine oil	As required

Special tools

Mark	Tool name and shape	Part No.	Application
a	Filter wrench 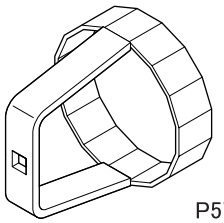 P57179	MH063203	Removal and installation of case

FUEL FILTER

◆Removal procedure◆

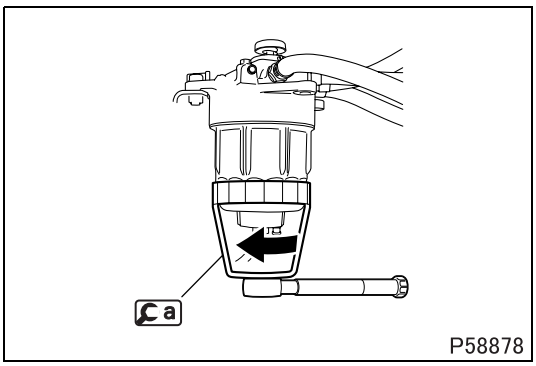

■**Removal: Case**

- Drain fuel from the case by loosening the water separator sensor.
- Using a, remove the case.

◆Installation procedure◆

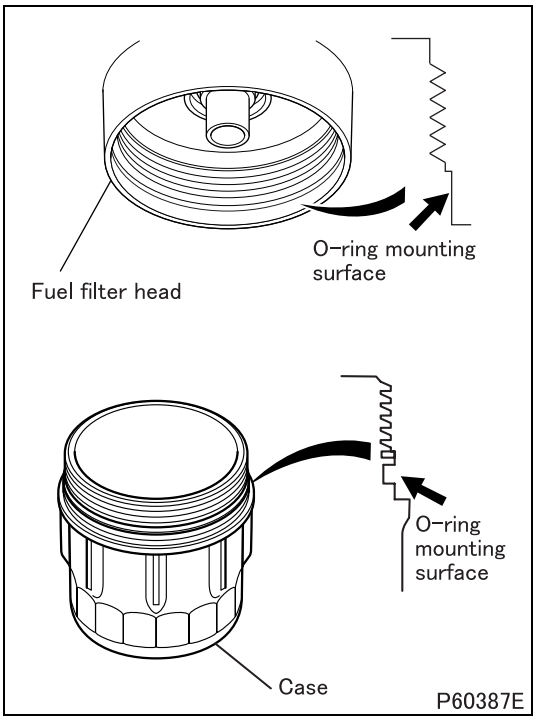

■ **Installation: Case**

- Clean the surface of the fuel filter head and case where the O-ring is to be mounted.

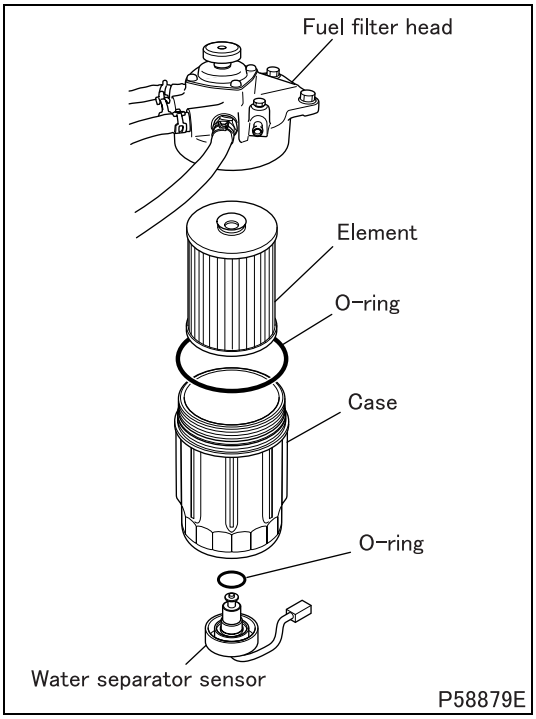

- Replace the filter element and O-rings with new parts.
- Apply a thin coat of engine oil to the O-rings. Install the O-rings onto the case and water separator sensor.

CAUTION ⚠

- **The use of non-genuine filter elements will lead to engine problems. Be sure to use only genuine parts.**
- **To help prevent fuel injection problems, keep the fuel filter and hoses free from contamination.**

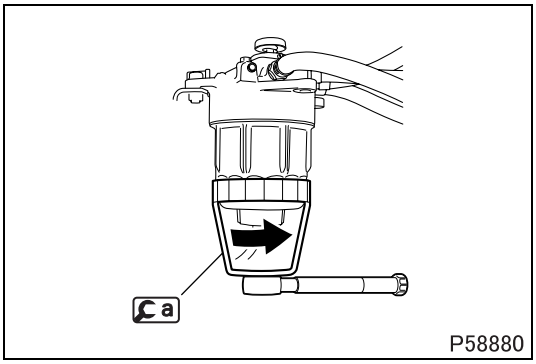

- Using a, tighten the case to the specified torque.
- Tighten the water separator sensor to the specified torque. With the sensor correctly installed, bleed air from the fuel system.
- If there is fuel leakage, remove and install the fuel filter correctly.

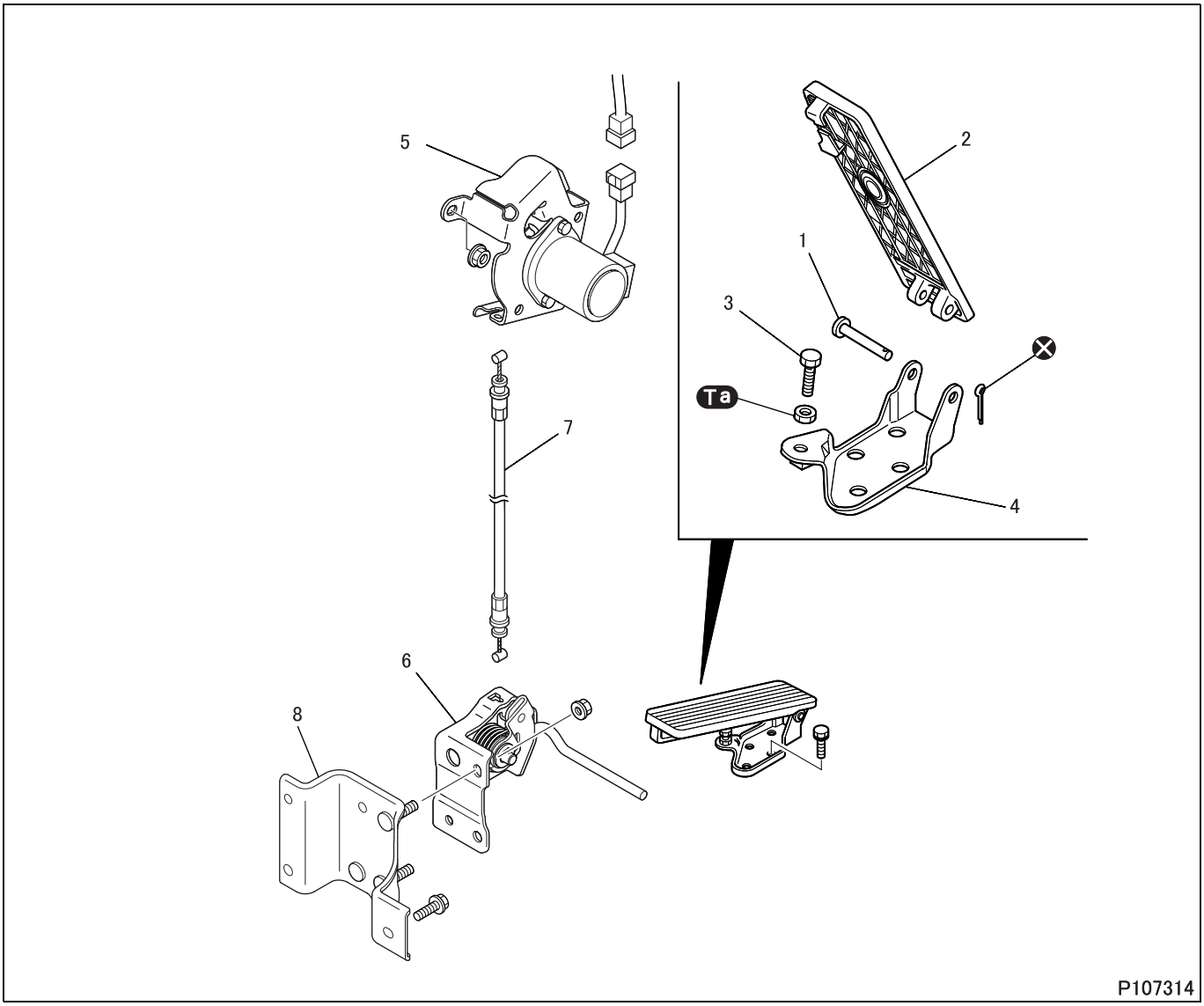

● **Disassembly sequence**

1 Accelerator pedal pin
2 Accelerator pedal
3 Stopper bolt
4 Accelerator pedal bracket
5 Accelerator position sensor and link assembly (See later section.)
6 Accelerator link assembly (See later section.)
7 Accelerator control cable
8 Accelerator link bracket

⊗: Non-reusable parts

CAUTION ⚠

- **Do not attempt to disassemble the accelerator link assembly because it is of a unit construction.**

● **Assembly sequence**

Follow the disassembly sequence in reverse.

- After the installation, check the no-load minimum speed and no-load maximum speed for normal state and adjust them if required. (See ON-VEHICLE INSPECTION AND ADJUSTMENT.)
- After assembly, press the accelerator pedal and make sure that the pedal moves smoothly.

Tightening torque (Unit: N·m {ft.lbs, kgf·m})

Mark	Parts to be tightened	Tightening torque	Remarks
Ta	Lock nut	4 to 6 {0.9 to 1.3, 0.4 to 0.6}	–

◆Installation procedure◆

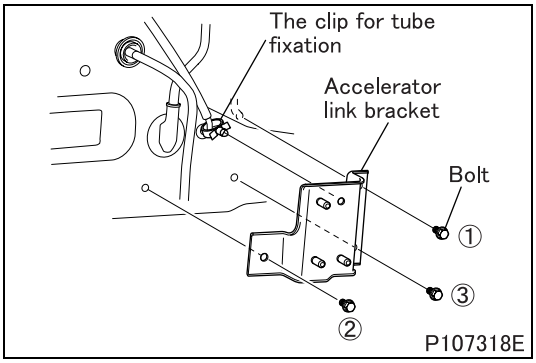

■ Installation: Accelerator link bracket

- Insert the accelerator link bracket to the clip for tube fixation.
- Install the accelerator link bracket by tightening the bolts in the order shown in the illustration.

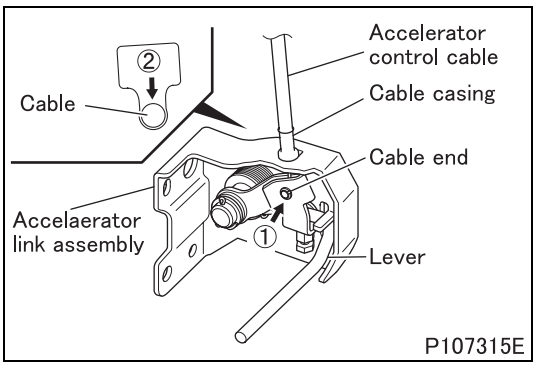

■ Installation: Accelerator control cable

- Install the accelerator control cable to the accelerator link assembly as follows:

① Insert the accelerator control cable end into the lever of the accelerator link assembly. Do not bend the cable. (minimum bending radius: 30 mm)

② Insert the accelerator control cable casing into the slit in the bracket of the accelerator link assembly until it clicks and is secured in position.

CAUTION ⚠

- **Insert the cable casing firmly into the slit. Otherwise the cable may bend, resulting in stiffness, jamming, or breakage of the cable.**

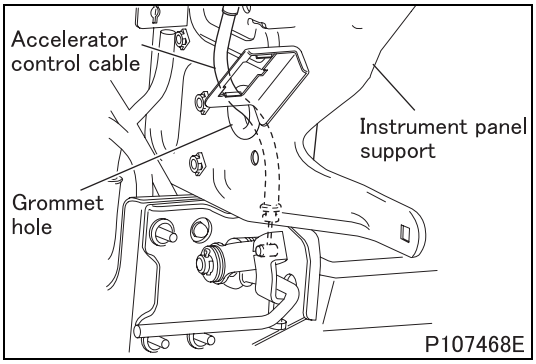

- Pass the accelerator control cable through the grommet-mounted hole in the instrument panel support.

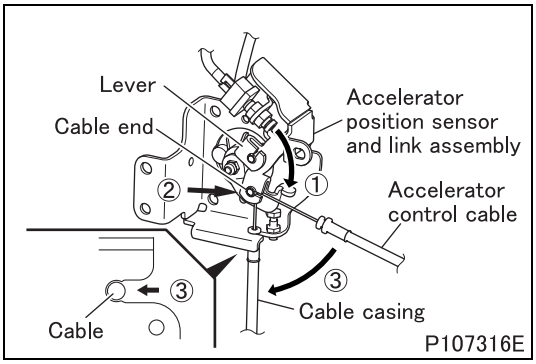

- Install the accelerator control cable to the accelerator position sensor and link assembly as follows:

① Bring the lever of the accelerator position sensor and link assembly into the state of full stroke.

② Insert the accelerator control cable end into the lever of the accelerator position sensor and link assembly.

③ Insert the accelerator control cable casing into the slit in the bracket of the accelerator position sensor and link assembly until it clicks and is secured in position.

CAUTION ⚠

- **Insert the cable casing firmly into the slit. Otherwise the cable may bend, resulting in stiffness, jamming, or breakage of the cable.**

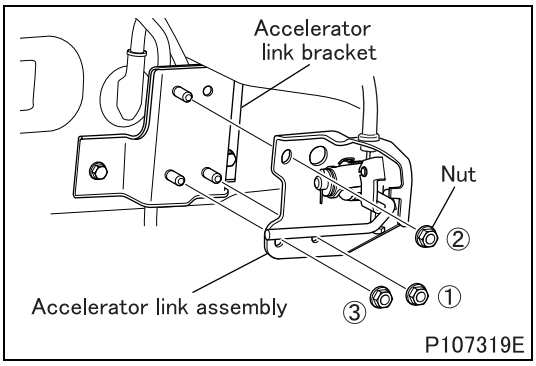

■ Installation: Accelerator link assembly

- Install the accelerator link assembly by tightening the nuts in the order shown in the illustration.

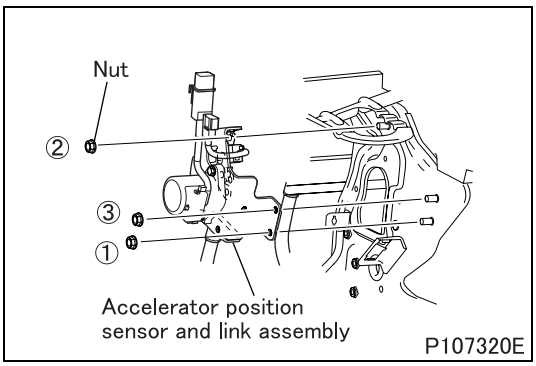

■ Installation: Accelerator position sensor and link assembly

- Install the accelerator position sensor and link assembly by tightening the nuts in the order shown in the illustration.

◆Inspection after installation◆

■ Inspection: Movement of accelerator pedal

- Check if the accelerator pedal satisfies the following conditions. If any abnormality is found, check the installation condition of the parts and replace any faulty part(s).
  - The accelerator pedal operates smoothly from the released position to the full stroke position without stiffness or jamming.
  - The accelerator pedal surely returns to its original (released) position when the pedal is released at any position.
  - There is no harness or other parts within 20 mm {0.79 in.} from any movable sections of the accelerator position sensor and link assembly and the accelerator link assembly.

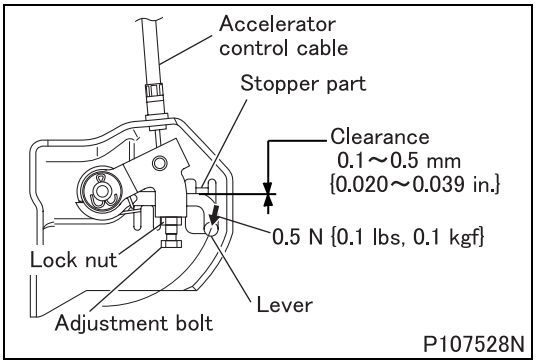

■ Adjustment: Play of accelerator control cable

[Inspection]

- Press down the lever of the accelerator link assembly with a force of 0.5 N {0.1 lbs, 0.1 kgf} and measure the clearance between the lever and the stopper. If the clearance is out of the value specified in the drawing, adjust the play.

[Adjustment]

- Loosen the lock nut.
- Adjust the clearance to the value specified in the drawing with the adjustment bolt. (Turning the bolt clockwise reduces the clearance.)
- After adjustment, tighten the lock nut.

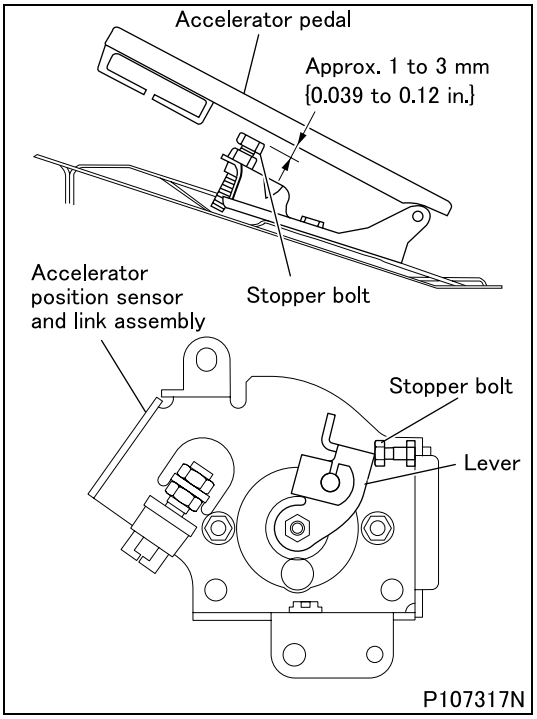

■ Adjustment: Clearance between the accelerator pedal and stopper bolt

- Press the accelerator pedal to contact the lever of the accelerator position sensor and link assembly with the stopper bolt. In this condition, adjust the clearance between the accelerator pedal and the stopper bolt under the pedal to the value specified in the drawing by adjusting the stopper bolt height.

Accelerator position sensor and link assembly

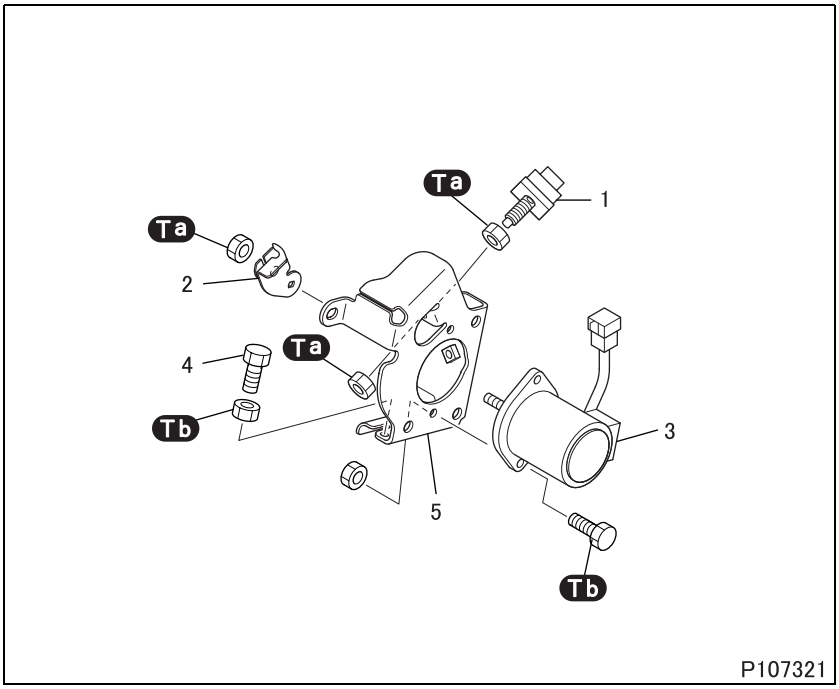

● Disassembly sequence

1 Accelerator position switch
2 Accelerator position sensor lever
3 Accelerator position sensor
4 Stopper bolt
5 Accelerator position sensor bracket

● Assembly sequence

Follow the disassembly sequence in reverse.

- After assembly, make sure that the accelerator position sensor lever moves smoothly.
- After assembly, adjust the installed position of the accelerator position switch and accelerator position sensor. (See Gr13EA.)

Tightening torque (Unit: N·m {ft.lbs, kgf·m})

Mark	Parts to be tightened	Tightening torque	Remarks
Ta	Nut (accelerator position switch installation)	9.81 to 13.7 {7.2 to 10, 1.0 to 1.4}	–
	Nut (accelerator position sensor lever installation)		
Tb	Bolt (accelerator position sensor installation)	4 to 6 {3.0 to 4.4, 0.4 to 0.6}	–
	Nut (stopper bolt tightening)		

M E M O

COMMON RAIL

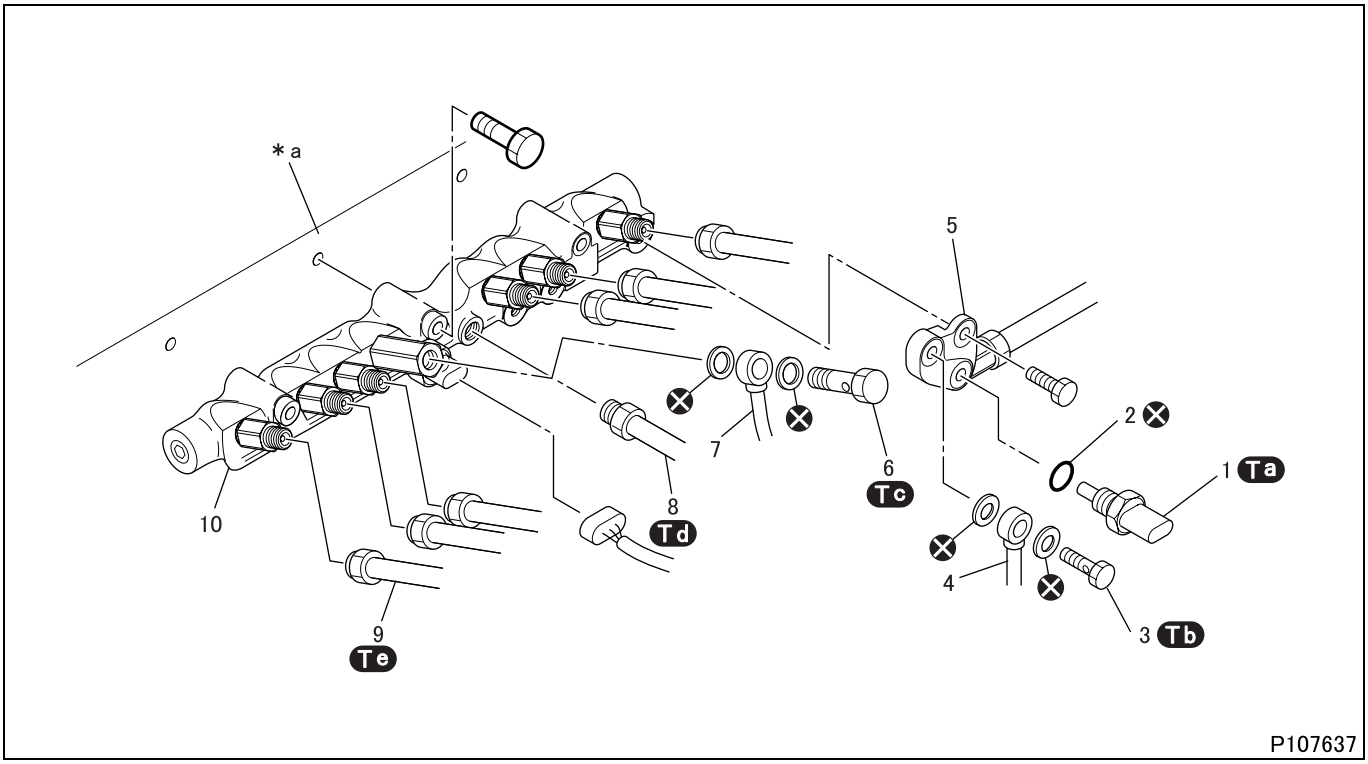

● **Disassembly sequence**

1 Fuel temperature sensor
2 O-ring
3 Eyebolt
4 Fuel return pipe
5 Connector
6 Eyebolt
7 Fuel overflow pipe
8 Fuel pipe
9 Injection pipe
10 Common rail

***a**: Crankcase
⊗: Non-reusable parts

WARNING ⚠

- **Fuel is highly flammable. Do not handle it near flames or heat.**
- **Spilled fuel may catch fire and therefore, must be wiped off completely.**

CAUTION ⚠

- **Any contamination of the common rail, even if it is minor, will greatly affect the performance of the engine. After removing pipes or other parts, plug the openings with covers. Wash eyebolts and gaskets in light oil and keep them away from contaminants.**

● **Assembly sequence**

Follow the disassembly sequence in reverse.

Tightening torque (Unit: N·m {ft.lbs, kgf·m})

Mark	Parts to be tightened	Tightening torque	Remarks
Ta	Fuel temperature sensor	17.6 to 21.5 {13 to 16, 1.8 to 2.2}	–
Tb	Eyebolt (for fuel return pipe mounting)	25 {18, 2.6}	–
Tc	Eyebolt (for fuel overflow pipe mounting)	17.7 to 22.6 {13 to 17, 1.8 to 2.3}	–
Td	Fuel pipe	49 to 58.8 {36 to 43, 5.0 to 6.0}	–
Te	Injection pipe	39.2 to 49 {29 to 36, 4.0 to 5.0}	–

◆Installation procedure◆

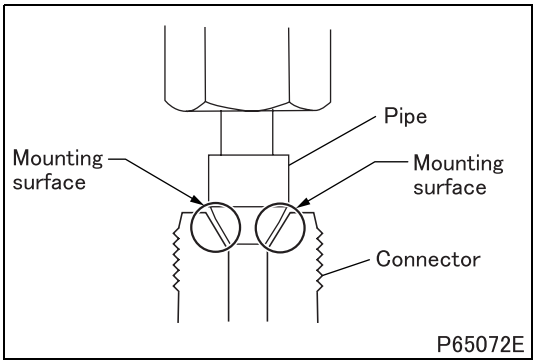

■ **Installation: Injection pipe and fuel pipe**

- Ensure that the pipe and mounting surfaces of the connector are flat and free from damage.
- Bring the pipe into intimate contact with mounting surfaces of the connector evenly, and temporarily tighten it without applying an excessive force.
- Tighten it to the specified torque after temporary tightening.

SUPPLY PUMP

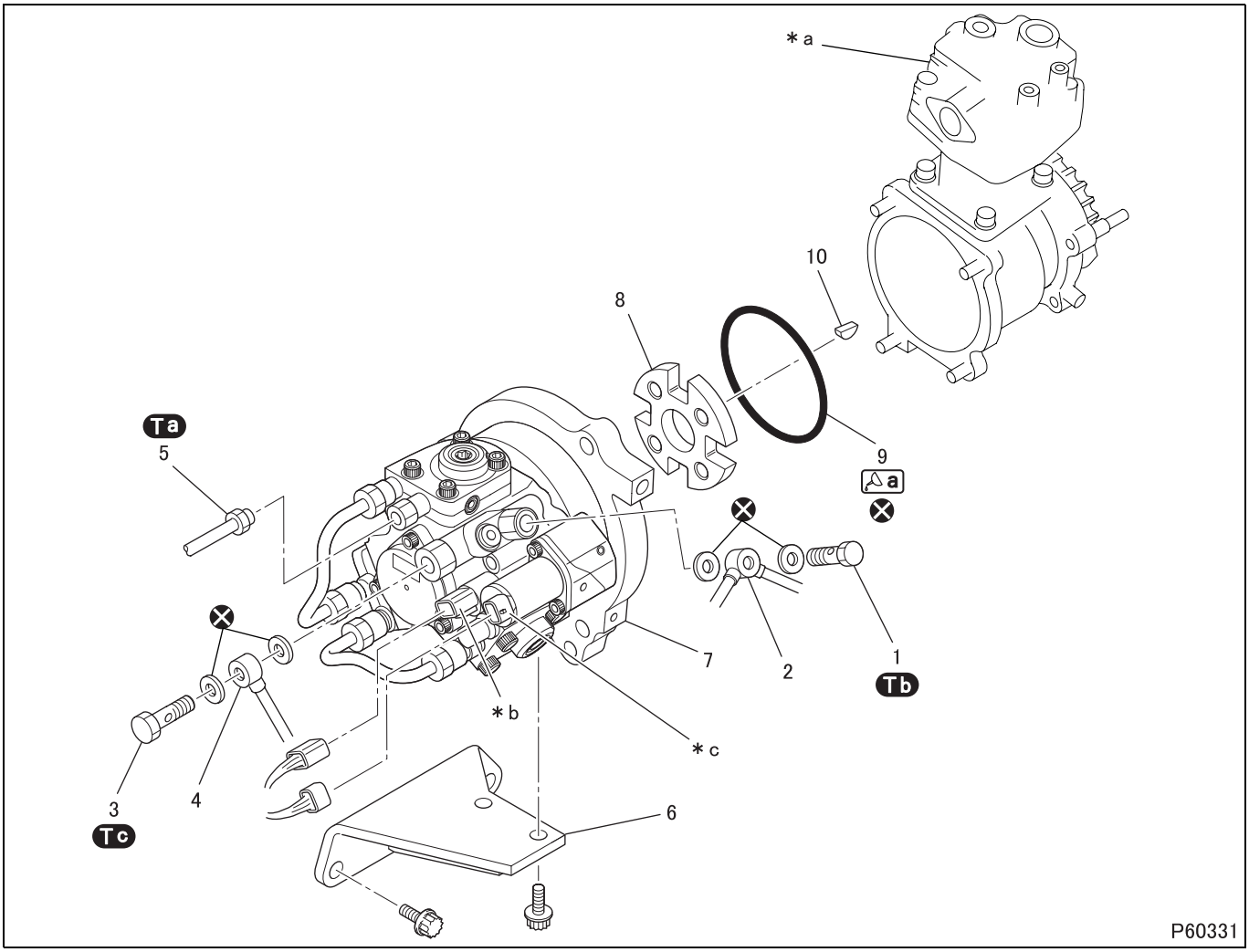

● **Disassembly sequence**

1	Eyebolt	**6**	Supply pump bracket	***a**:	Air compressor
2	Fuel return pipe	**7**	Supply pump	***b**:	Fuel temperature sensor
3	Eyebolt	**8**	Driving disc	***c**:	Suction control valve
4	Fuel suction pipe	**9**	O-ring		
5	Fuel pipe	**10**	Key	⊗:	Non-reusable parts

WARNING ⚠

- **Fuel is highly flammable. Do not handle it near flames or heat.**
- **Spilled fuel may catch fire and therefore, must be wiped off completely.**

CAUTION ⚠

- **Any contamination of the supply pump, even if it is minor, will greatly affect the performance of the engine. After removing pipes, hoses, or other parts, plug the openings with covers. Wash eyebolts and gaskets in light oil and keep them away from contaminants.**

- Contact DENSO Service Station for any service needs of the supply pump.

● **Assembly sequence**

Follow the disassembly sequence in reverse.

CAUTION ⚠

- **If the supply pump has been replaced, perform the "initialization of supply pump unit difference learning value" using Multi-Use Tester in order to clear the correction data (learned pump unit difference) from the engine electronic control unit. (See Gr13EA.)**

Tightening torque (Unit: N·m {ft.lbs, kgf·m})

Mark	Parts to be tightened	Tightening torque	Remarks
Ta	Fuel pipe	39.2 to 49 {29 to 36, 4.0 to 5.0}	–
Tb	Eyebolt (for fuel return pipe mounting)	7.9 to 12.7 {5.8 to 9.4, 0.8 to 1.3}	–
Tc	Eyebolt (for fuel suction pipe mounting)	14.8 to 19.6 {11 to 14, 1.5 to 2.0}	–

Lubricant and/or sealant

Mark	Points of application	Specified lubricant and/or sealant	Quantity
a	O-ring	Engine oil	As required

◆Installation procedure◆

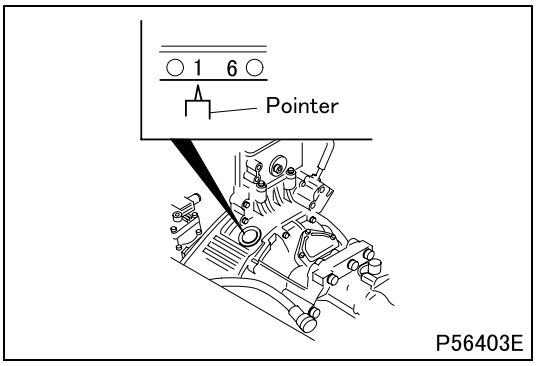

■ Installation: Supply pump

- Position the No. 1 piston to the top dead center in the compression stroke in the following manner.
  - Crank the engine to align the pointer with the "1 6" mark on the flywheel.
  - This will bring either the No. 1 piston or the No. 6 piston to the top dead center in the compression stroke. If both the inlet and exhaust rockers can be moved by hand by the amount of valve clearance, that cylinder is at the top dead center in the compression stroke. From that position, every turn of the crankshaft will alternately bring the No. 1 and No. 6 pistons to the top dead center in the compression stroke. (See Gr11.)

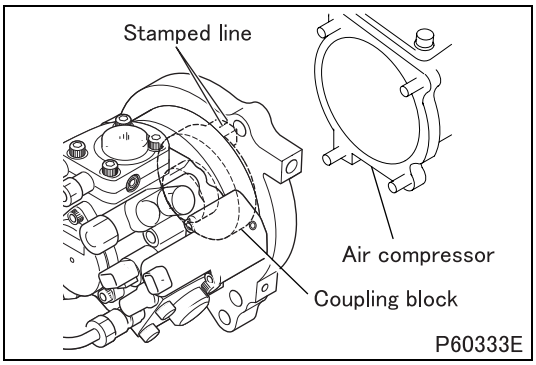

- Install the supply pump while ensuring that the stamped line on the supply pump timing cover is aligned with the stamped line on the coupling block.

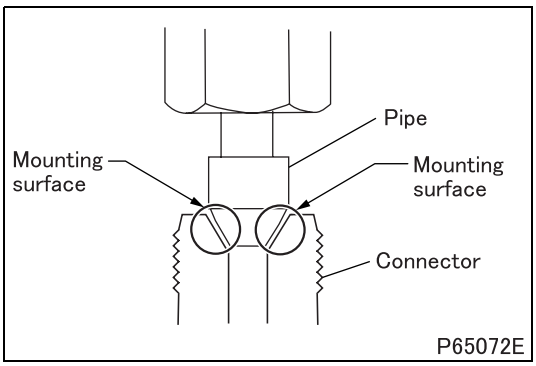

■ Installation: Fuel pipe

- Ensure that the pipe and mounting surfaces of the connector are flat and free from damage.
- Bring the pipe into intimate contact with mounting surfaces of the connector evenly, and temporarily tighten it without applying an excessive force.
- Tighten it to the specified torque after temporary tightening.

INJECTOR

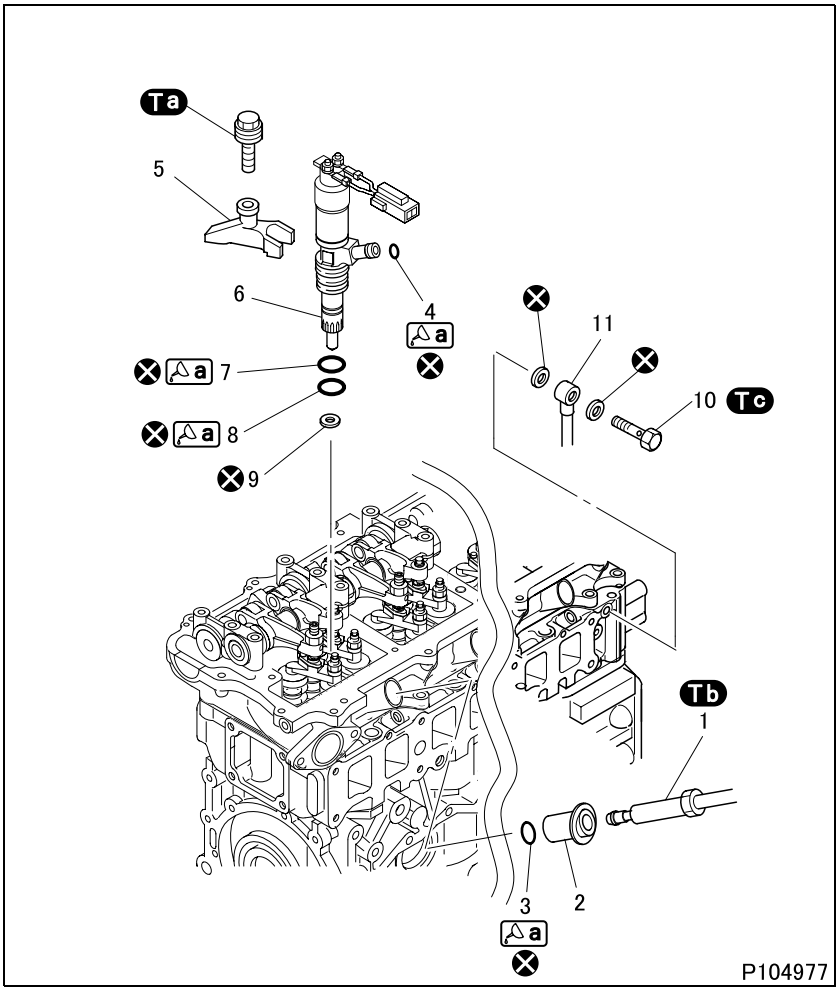

● **Disassembly sequence**

1 Injection pipe
2 Injection pipe seal
3 O-ring
4 O-ring
5 Nozzle bridge
6 Injector
7 O-ring
8 O-ring
9 Nozzle tip gasket
10 Eyebolt
11 Fuel return pipe

⊗: Non-reusable parts

WARNING ⚠

- **Before attempting to remove the injectors, turn the starter switch to the LOCK position.**
- **Spilled fuel may catch fire and therefore, must be wiped off completely.**

CAUTION ⚠

- **When removing the injector, be careful not to inadvertently hit the two-way electromagnetic valve with tools etc.**
- **To eliminate fuel injection and other problems, protect the injectors and pipes, that have been removed, from the ingress of contaminants.**

- Contact DENSO Service Station for any service needs of the injector.

● **Assembly sequence**

Follow the disassembly sequence in reverse.

CAUTION ⚠

- **Do not attempt to clean the nozzle hole with a wire brush or other similar tools, or the hole can be damaged.**
- **Be sure to tighten the nozzle bridge bolts to the specified torque. Overtightening the bolts can deform the injectors, resulting in incorrect fuel injection.**
- **If an injector is replaced with a new one, the injector correction data must be written in the engine electronic control unit.**
- **For the data writing work, consult your nearest MITSUBISHI FUSO dealer or MITSUBISHI FUSO TRUCK OF AMERICA, Inc.**

Tightening torque (Unit: N·m {ft.lbs, kgf·m})

Mark	Parts to be tightened	Tightening torque	Remarks
Ta	Bolt (for mounting nozzle bridge)	33 to 38 {24 to 28, 3.4 to 3.9}	–
Tb	Injection pipe	39.2 to 49 {29 to 36, 4.0 to 5.0}	–
Tc	Eyebolt (for mounting fuel return pipe)	18 to 23 {13 to 17, 1.8 to 2.3}	–

Lubricant and/or sealant

Mark	Points of application	Specified lubricant and/or sealant	Quantity
a	O-ring	Engine oil	As required

Special tools (Unit: mm)

Mark	Tool name and shape	Part No.	Application
a	Injector extractor adapter 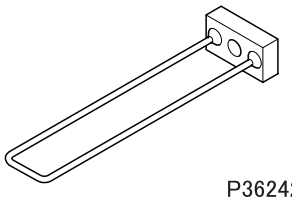 P36242	MH062560	Removing injector (to be used in combination)
b	Nozzle extractor 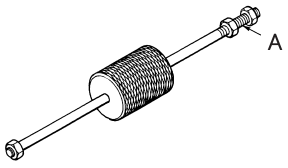 P13523	MH061071	

A
M8 × 1.25

◆Removal procedure◆

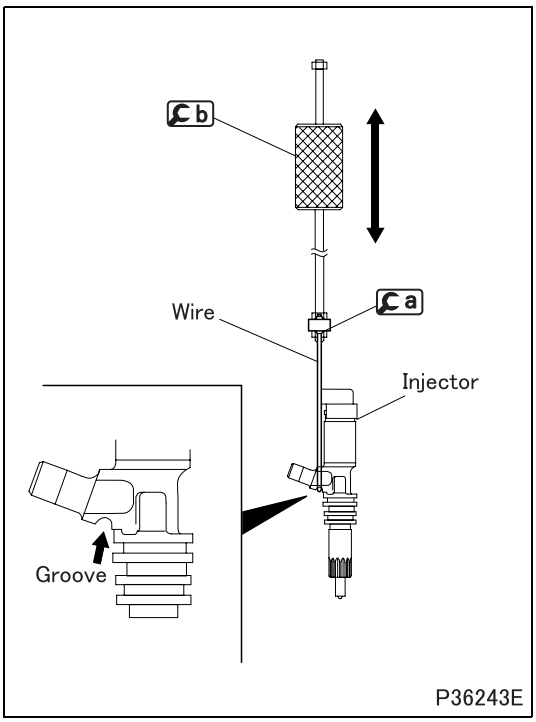

■**Removal: Injector**

- Using a and b and with the wire of a engaged in the groove on the injector, remove the injector.

◆Installation procedure◆

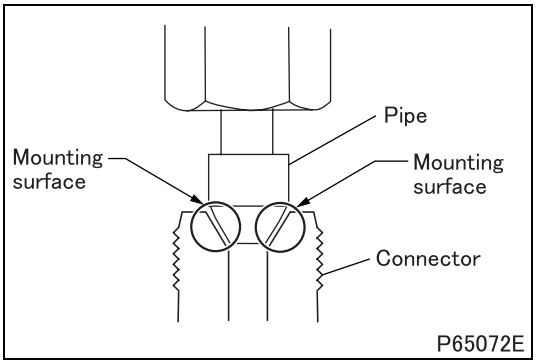

■ **Installation: Injection pipe**

- Ensure that the pipe and mounting surfaces of the connector are flat and free from damage.
- Bring the pipe into intimate contact with mounting surfaces of the connector evenly, and temporarily tighten it without applying an excessive force.
- Tighten it to the specified torque after temporary tightenin

Group 13EA

Common Rail System

Table of Contents

Back

Home

MITSUBISHI FUSO TRUCK OF AMERICA, Inc.

Pub.No.TWME0806-13EA

INDEX

SPECIFICATIONS 13EA-2

STRUCTURE AND OPERATION

1. **Overview 13EA-4**
2. **Electronic Control System 13EA-12**
3. **Electronic Control Unit Connection Diagram 13EA-22**

TROUBLESHOOTING

1. **Diagnosis Procedure 13EA-24**
2. **Diagnostic Precautions 13EA-24**
3. **Inspections Based on Fault Codes 13EA-25**
4. **Multi-Use Tester Service Data 13EA-744**
5. **Actuator Tests Performed Using Multi-Use Tester 13EA-749**
6. **Registration and Alteration of Data in Engine Electronic Control Unit 13EA-752**
7. **Initialization of Supply Pump Unit Difference Learning Value in Engine Electronic Control Unit 13EA-753**

INSPECTION OF ELECTRICAL EQUIPMENT 13EA-754

INSTALLED LOCATIONS OF PARTS 13EA-764

ELECTRIC CIRCUIT DIAGRAM 13EA-772

SPECIFICATIONS

Item			Specification
Supply pump	Manufacturer		DENSO
	Model		HP-4
	Control method		Electronic
	Feed pump type		Trochoid pump
	SCV (suction control valve)	Rated voltage V	12
	Max. common rail pressure	MPa {psi, kgf/cm^2}	170 {24890, 1750}
Common rail	Manufacturer		DENSO
	Common rail volume	cm^3 {cu.in.}	26 {1.56}
	Pressure limiter opening pressure	MPa {psi, kgf/cm^2}	221 ± 9 {32050 ± 1310, 2250 ± 92}
	Common rail pressure sensor supply voltage	V	5
Injectors	Manufacturer		DENSO
	Control method		Electrical
	Max. operating pressure	MPa {psi, kgf/cm^2}	170 {24890, 1750}
	Min. operating pressure	MPa {psi, kgf/cm^2}	24 {3480, 245}
Common rail electronic control unit	Manufacturer		DENSO
	Rated voltage	V	12

M E M O

1. Overview

- In the common rail system, an electronic control unit monitors various aspects of the engine (engine speed, throttle opening, coolant temperature, etc.) using information from sensors. In accordance with these data, the electronic control unit effects control over the fuel injection quantity, fuel injection timing, and fuel injection pressure in order to optimize the engine's operation.
- The electronic control unit has a diagnosis function that enables it to recognize abnormalities in the common rail system's major components and alert the driver to them.
- The common rail system consists mainly of an electronically controlled supply pump; injectors; a common rail; and the electronic control unit and sensors that are used to control the other components.

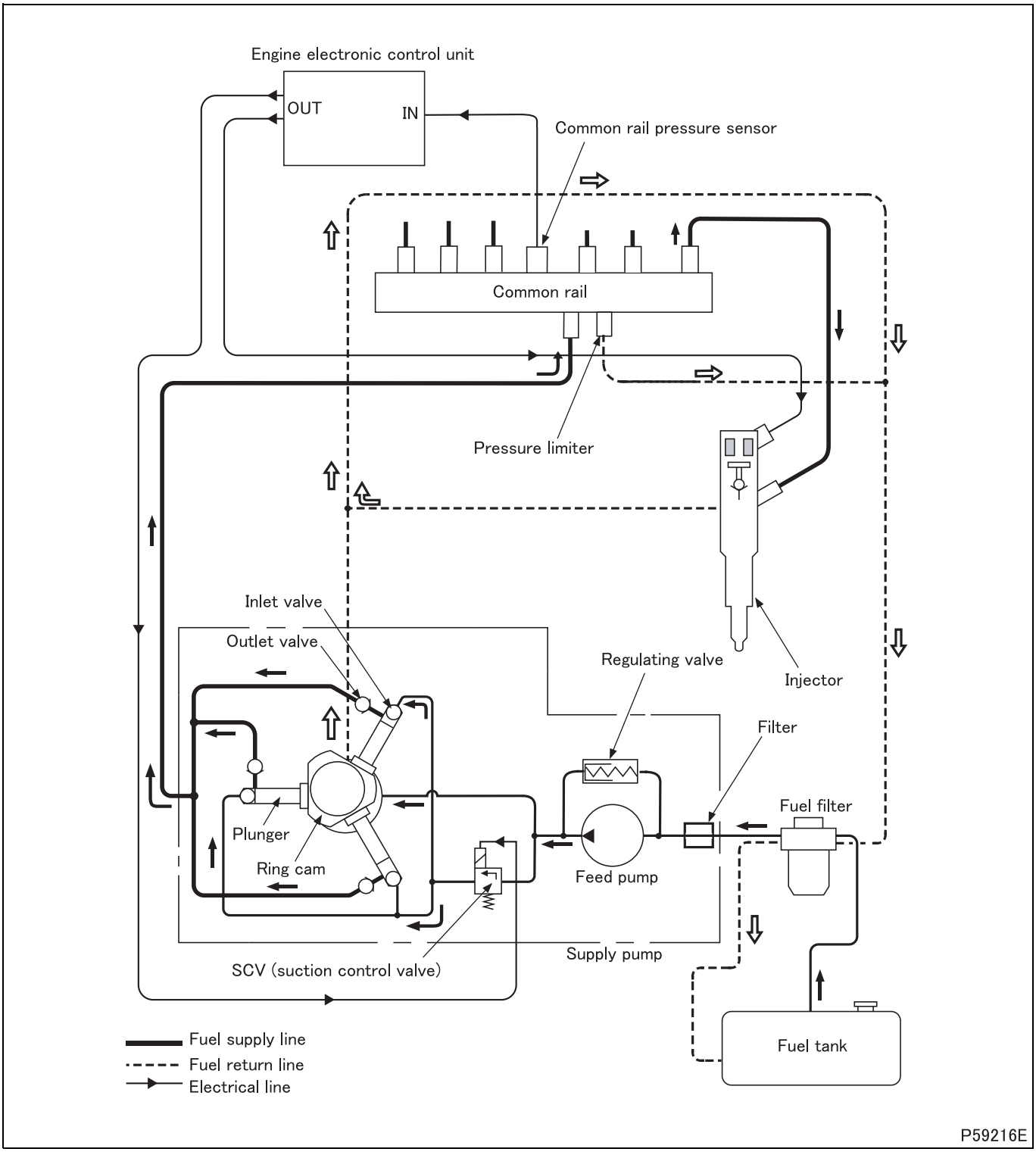

- When the engine is cranked by means of the starter switch, the feed pump (this is located inside the supply pump) simultaneously draws fuel from the fuel tank and feeds it via the fuel filter to the SCV (suction control valve). A quantity of fuel metered by the SCV (suction control valve) is supplied via the inlet valves to the plunger chambers.
- The fuel in the plunger chambers is pressurized. The outlet valves are then opened, and the fuel is fed under pressure to the common rail.
- The pressurized fuel is held in the common rail and then uniformly fed to the injectors.
- In response to signals from the engine electronic control unit, a solenoid valve in each injector causes the injector to inject fuel into the relevant combustion chamber at the optimal timing and in the optimal quantity.

1.1 Supply pump

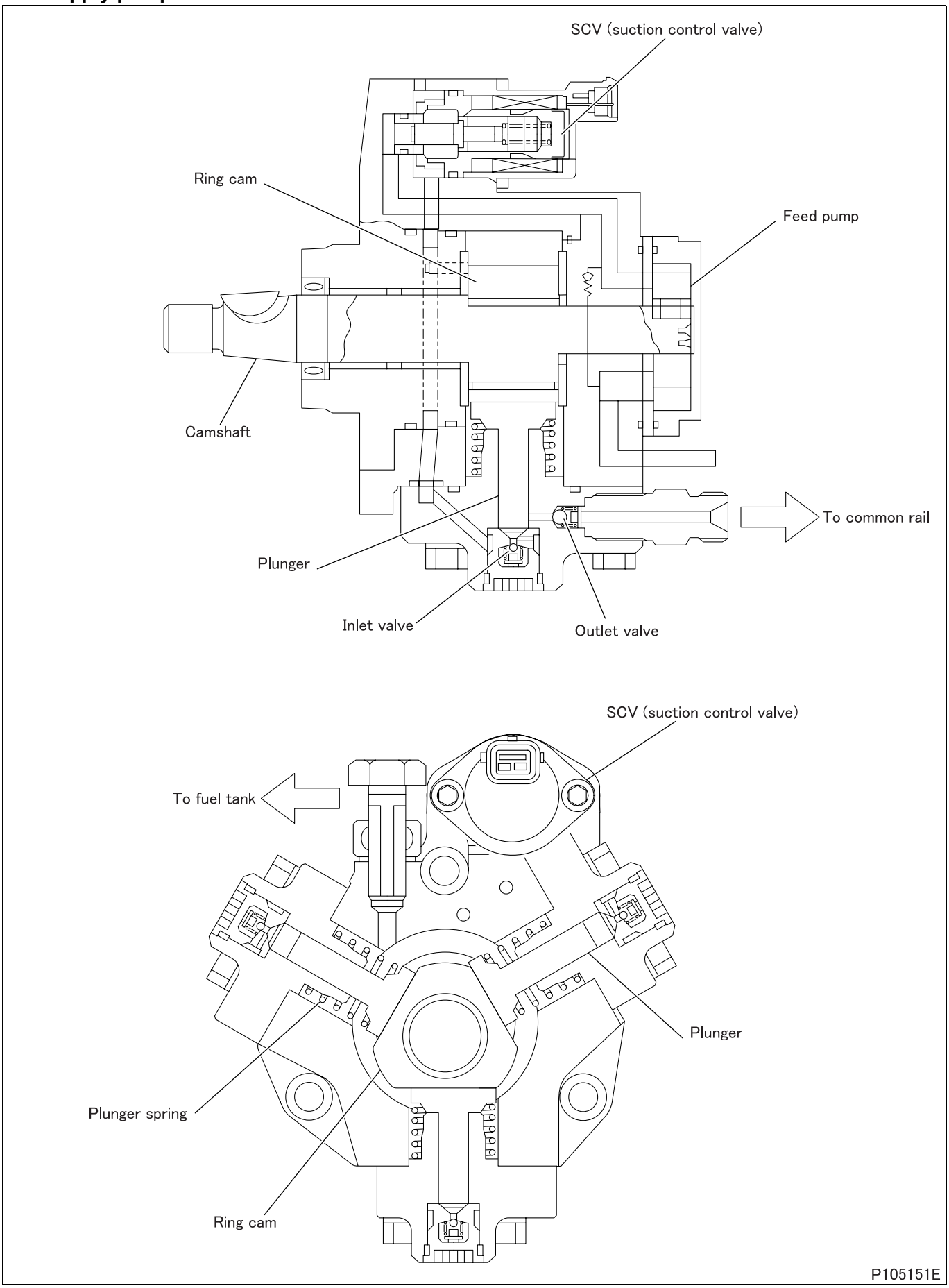

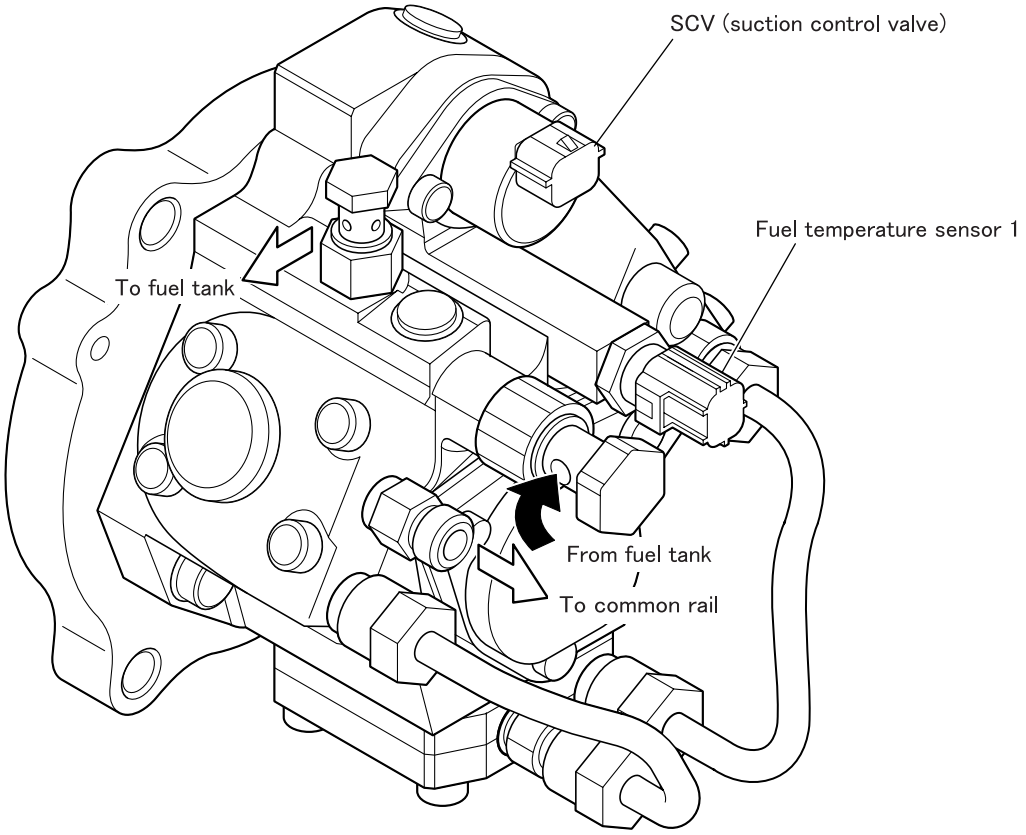

P104028E

CAUTION ⚠

- **Be sure to connect the SCV (suction control valve) connector to the engine harness before starting the engine. If the engine were started with the SCV (suction control valve) connector not connected, control of the supply pump by the engine electronic control unit would not be possible and a fault would ensue.**

- The supply pump pressurizes fuel and supplies it in a highly pressurized state.
- Fuel drawn from the fuel tank by the feed pump is not supplied directly to the plungers. It is supplied first to the common rail pressure solenoid valve, which controls the amount of fuel reaching the plungers.
- If the fuel pressure exceeds a certain level, the regulating valve returns fuel to the inlet side of the feed pump. This operation keeps the fuel pressure constant.
- Rotation of the camshaft causes (via the ring cam) up-down movement of the plungers. Fuel in the plunger chambers is thus highly pressurized.

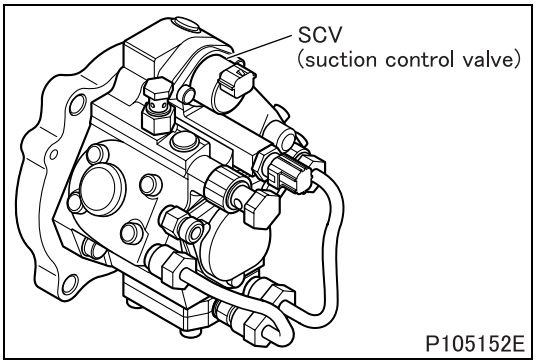

(1) SCV (suction control valve)

- The SCV (suction control valve) receives fuel from the feed pump and feeds fuel toward the plungers of the supply pump in such a quantity that the fuel pressure corresponds to that required by the engine electronic control unit.
- When the SCV (suction control valve) is not operating, i.e., when current is not flowing, fuel flows at its maximum rate. When current flows, the piston in the common rail pressure solenoid valve is pressed down such that fuel is not fed toward the plungers.

1.2 Common rail

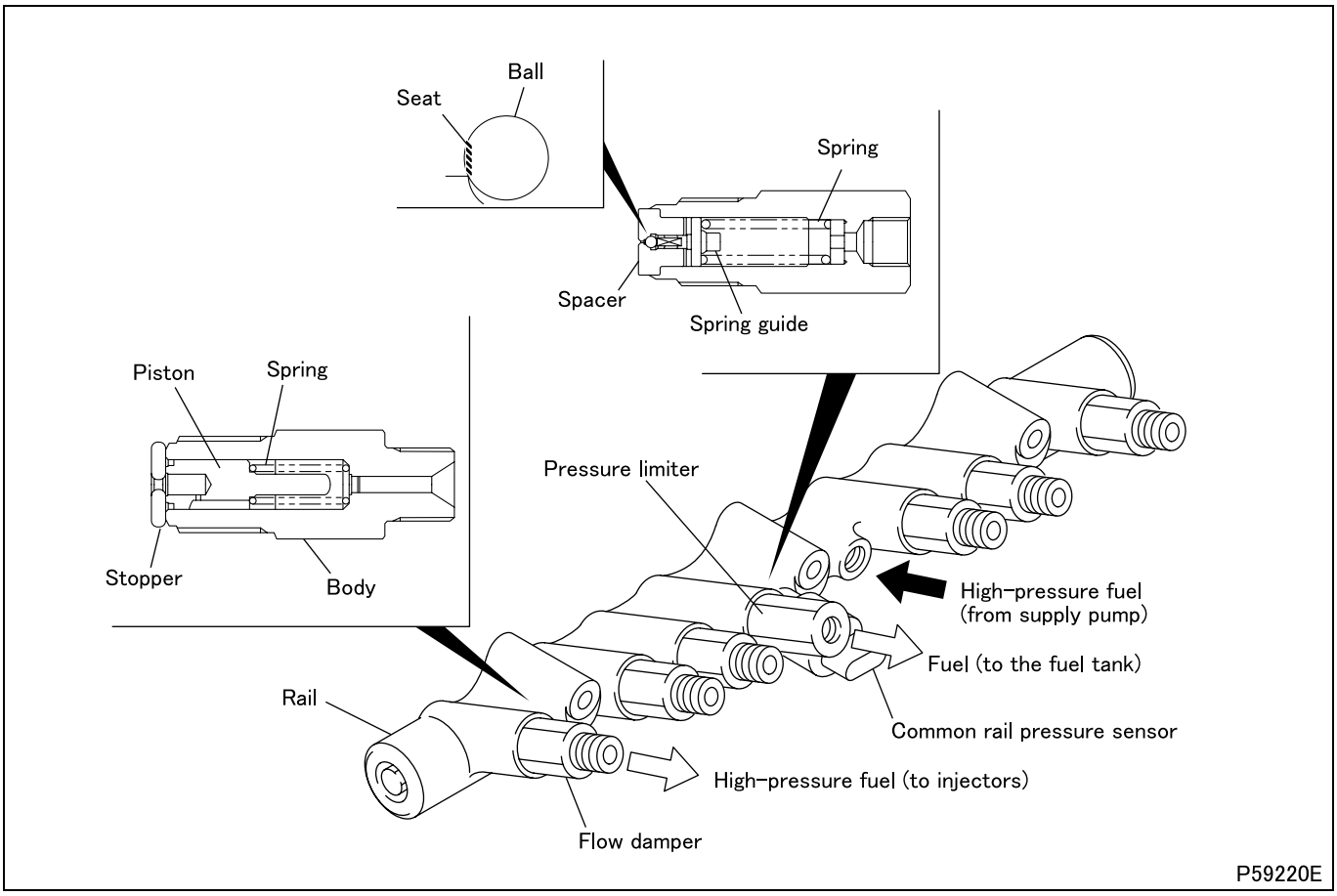

- The common rail distributes to the injectors high-pressure fuel that has been fed from the supply pump.
- Each flow damper prevents an abnormal outflow of fuel. It does so by blocking the fuel passage in the event of fuel leakage from the injection pipe or excessive injection of fuel from the injector.
- The common rail pressure sensor is used in feedback control. It senses the fuel pressure inside the common rail and feeds a corresponding signal to the electronic control unit.
- If the fuel pressure in the common rail exceeds a certain, set level, the piston in the pressure limiter pushes and compresses the spring such that fuel is able to escape. The pressure limiting valve thus prevents the fuel pressure from becoming higher than the set pressure.

Flow damper

- During normal operation, the piston moves (thus pushing and compressing the spring) to the extent necessary for one injection quantity to pass through. The piston does not make contact with the seat at this time. When injection is complete, the piston is returned to its initial position by the spring.

- If the amount of fuel passing through the flow damper becomes excessively great, the piston presses against the seat, thereby closing the fuel passage and preventing an abnormal outflow of fuel.
  When the piston has pressed against the seat, it does not return to its original position until the engine has been stopped and the pressure in the common rail has come down.

1.3 Injector

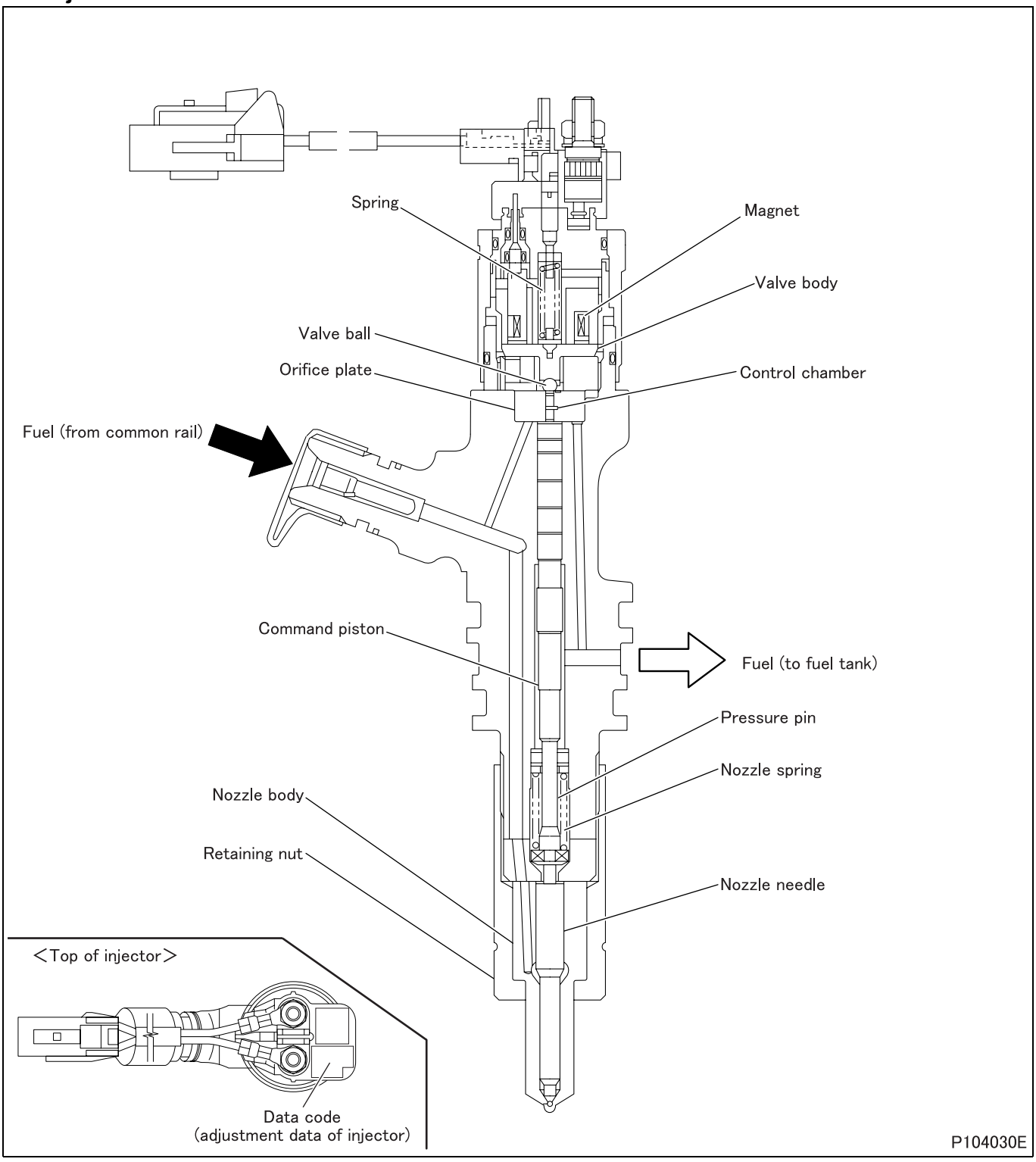

- In accordance with electrical signals from the engine electronic control unit, each injector supplies high-pressure fuel from the common rail to the relevant combustion chamber of the engine at the optimal timing and in the optimal quantity.

- The injector is divided into the control section and injector section.
  - The control section consists of the control chamber, magnet, spring, valve body, valve ball, pressure pin, command piston, and orifice plate. The pressure pin is located between the control section and the injection section.
  - The injection section consists of the nozzle body, nozzle needle, nozzle spring, and retaining nut.
- On the top of the injector is marked the data code (adjustment data of injector) for entry of injector correction data into the engine electronic control unit.
- This data code is intended to restrain the fluctuation of injection quantity by each injector with it registered in the engine electronic control unit.

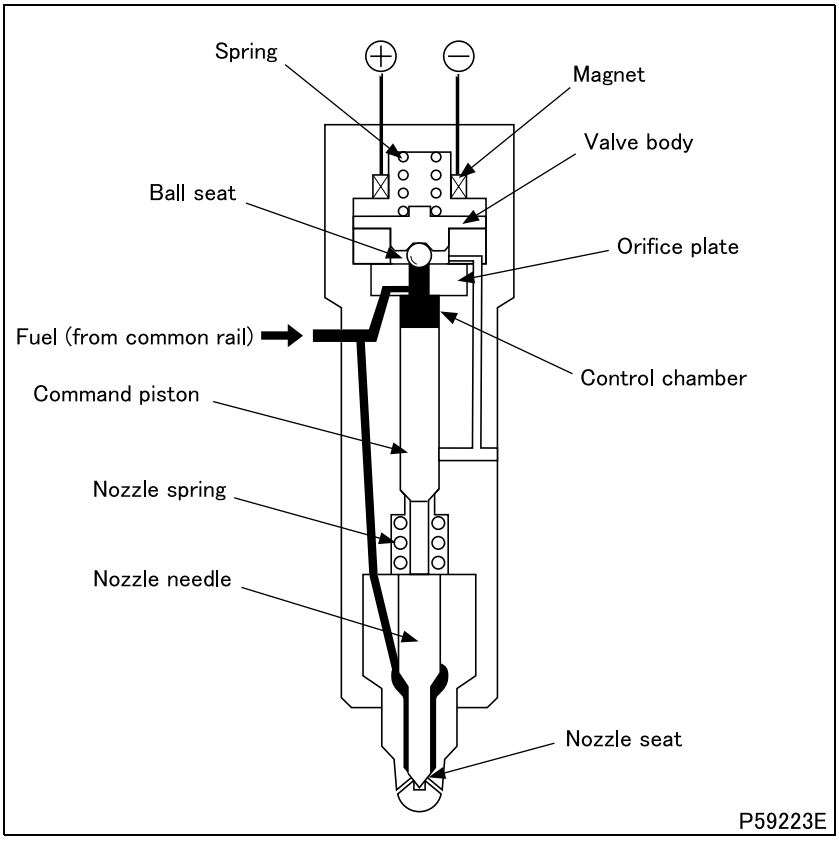

(1) Operation

(1.1) Injection not taking place

- With the magnet not energized, the valve body, is pushed up by the spring in the magnet such that the ball seat is closed.
- The high-pressure fuel acts upon the control chamber via orifice plate. The same pressure acts upon the nozzle needle.
- The fuel pressure acting on the nozzle needle cannot overcome the command piston and nozzle spring, so the nozzle needle stays in its downward-pushed position and injection does not take place.

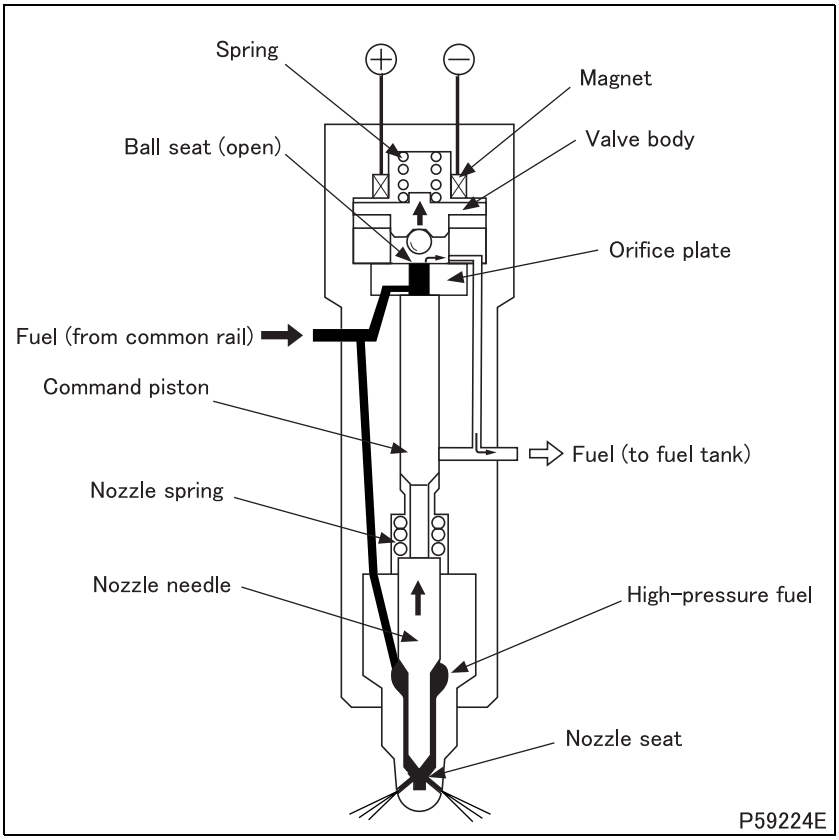

(1.2) Start of injection

- When the magnet is energized, the resulting electromagnetic force draws the valve body upward, causing the ball seat to open.
- Fuel in the control chamber passes through the ball seat and orifice plate and flows to the fuel tank.
- With the pressure in the control chamber reduced, the fuel acting on the nozzle needle overcomes the command piston and nozzle spring, pushing up the nozzle needle such that injection starts.
- If the magnet remains energized, the injection rate reaches its maximum level.

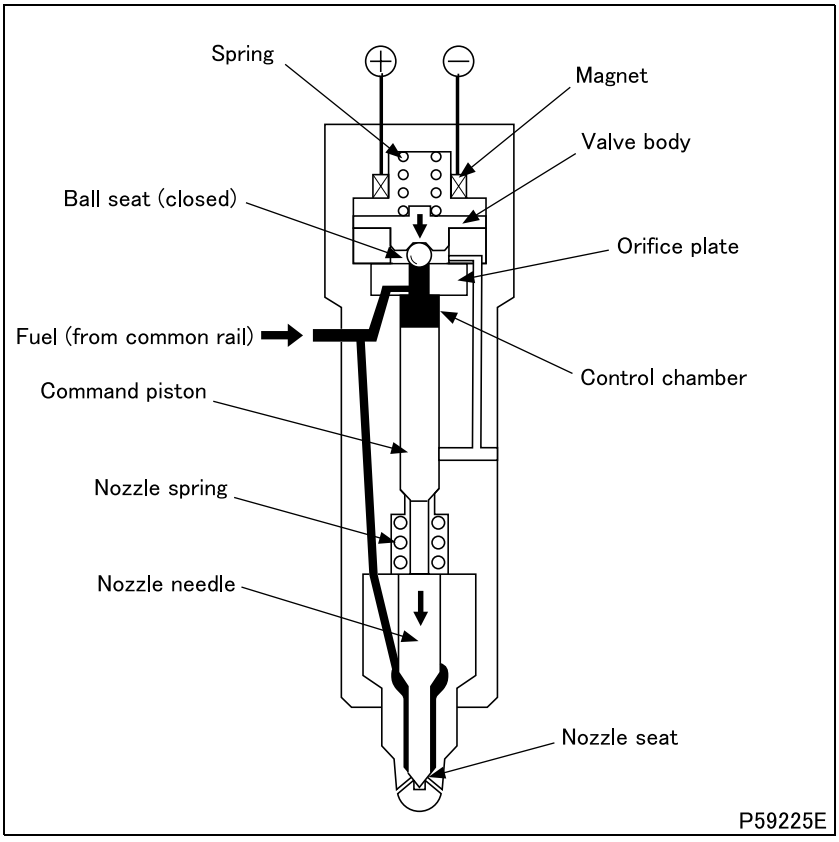

(1.3) End of injection

- When energization of the magnet is stopped, the valve body is pushed downward by the spring in the magnet such that the ball seat closes. At this time, fuel flows into the control chamber via orifice plate, pushing down the command piston and nozzle needle such that injection finishes.

2. Electronic Control System

2.1 System block diagram

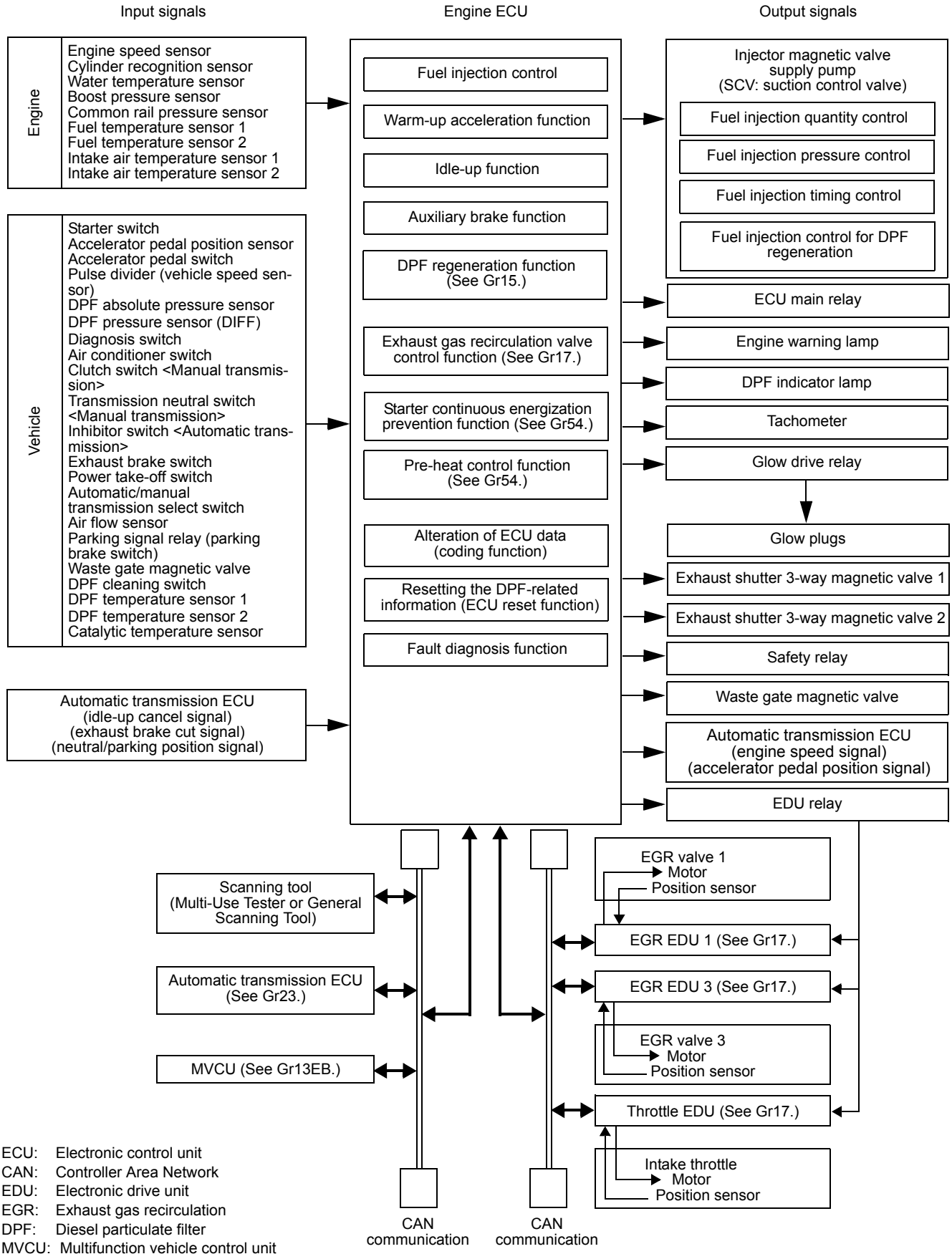

ECU: Electronic control unit
CAN: Controller Area Network
EDU: Electronic drive unit
EGR: Exhaust gas recirculation
DPF: Diesel particulate filter
MVCU: Multifunction vehicle control unit

Part	Main function/operation
Engine speed sensor	Sensing of engine speed
Cylinder recognition sensor	Cylinder recognition
Starter switch	Senses that the engine is in starting condition with the starter switch in START position.
Water temperature sensor	Sensing of coolant temperature
Accelerator pedal position sensor	Sensing of extent of accelerator pedal depression
Accelerator pedal switch	Sensing of released/depressed condition of accelerator pedal (OFF with pedal depressed)
Clutch switch <Manual transmission>	Sensing of released/depressed condition of clutch pedal (OFF with pedal released)
Transmission neutral switch <Manual transmission>	Detection of transmission neutral condition (OFF with transmission in neutral)
Inhibitor switch <Automatic transmission>	Detection of transmission 'N' range
Pulse divider (vehicle speed sensor)	Sensing of vehicle speed
DPF absolute pressure sensor	Sensing of DPF absolute pressure value
DPF pressure sensor (DIFF)	Sensing of DPF filter differential pressure
Fuel temperature sensor	Sensing of fuel temperature
Exhaust brake switch	Operation of auxiliary brake
Diagnosis switch	Output of diagnosis codes
Air conditioner switch	ON when air conditioner is operating
Boost pressure sensor	Sensing of boost pressure
Intake air temperature sensor 1	Sensing of intake air temperature
Intake air temperature sensor 2	Sensing of boost air temperature
Multi-Use Tester connector	Communication between Multi-Use Tester and common rail system
Common rail pressure sensor	Sensing of common rail pressure
Power take-off switch	Operation of power take-off
Automatic/manual transmission select switch	On automatic transmission vehicles, wire connection is made (no wire connection on M/T vehicles)
Air flow sensor	Sensing of intake air flow rate
Parking signal relay (parking brake switch)	Detection of parking condition (turns ON when the parking brake is applied)
Waste gate magnetic valve	Switching ON/OFF pressure to the turbocharger
DPF cleaning switch	ON/OFF changeover of DPF manual regeneration
DPF temperature sensor 1	Detection of ceramic filter inlet temperature
DPF temperature sensor 2	Detection of ceramic filter outlet temperature
Catalytic temperature sensor	Detection of front oxidation catalyst inlet temperature
Injector magnetic valve	Control of fuel injection rate, fuel injection quantity, and fuel injection timing
SCV (suction control valve)	Control of fuel injection pressure
Electronic control unit main relay	Power on/off of electronic control unit
Engine warning lamp	Indication of system abnormalities
DPF indicator lamp	Illuminates when the particulate matter accumulates in the DPF ceramic filter
Exhaust shutter 3-way magnetic valve	ON/OFF control of exhaust brake valve
Glow drive relay	ON/OFF control of glow plugs
Tachometer	Indication of engine speed (in meter cluster)
Safety relay	Control of starter continuous energization prevention function

Part		Main function/operation
Automatic transmission ECU	Idle-up cancel signal	Releasing the idle-up except N range
	Engine speed signal	Output of the engine speed for automatic transmission control
	Neutral/Parking position signal	Detection of Neutral (N range) and Parking (P range) in the automatic transmission
Automatic transmission ECU (engine speed signal)		Output of signals corresponding to engine speed for automatic transmission control
Automatic transmission ECU (accelerator pedal position signal)		Output of signals corresponding to extent of accelerator pedal depression for automatic transmission control
CAN communication (EGR EDU, throttle EDU)		Engine data recognized by the engine ECU are outputted to the CAN bus to enable systems to obtain data that they need for control. Each system's EDU issues signals to the engine ECU to enable it to effect engine control appropriate to control of the system. (See Gr17 for EGR EDU and throttle EDU control.)
CAN communication (A/T ECU, MVCU)		Engine data recognized by the engine ECU are outputted to the CAN bus to enable systems to obtain data that they need for control. The A/T ECU and MVCU issue signals to the engine ECU to enable it to effect engine control appropriate to control of the system. (See Gr23 for A/T ECU.) (See Gr13EB for MVCU.)
CAN communication (scanning tool)		Indicating and erasing fault codes and obtaining the vehicle data of the ECU

M E M O

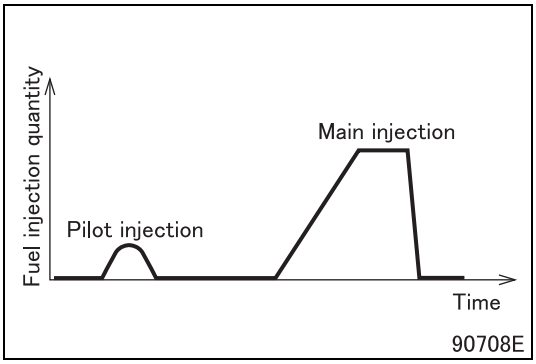

2.2 Fuel injection control

(1) Pilot injection

- Pilot injection entails the injection of an extremely small amount of fuel ahead of the main injection.
- Pilot injection suppresses heat generation early in the injection cycle and thus suppresses NOx generation and noise at the start of combustion.

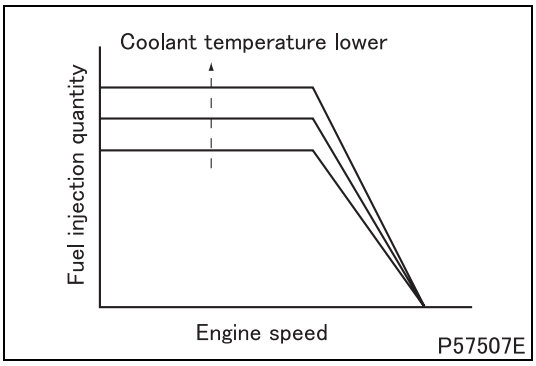

2.3 Fuel injection quantity control

(1) Fuel injection quantity during engine startup

- During engine startup, the fuel injection quantity is determined in accordance with the engine speed and coolant temperature.

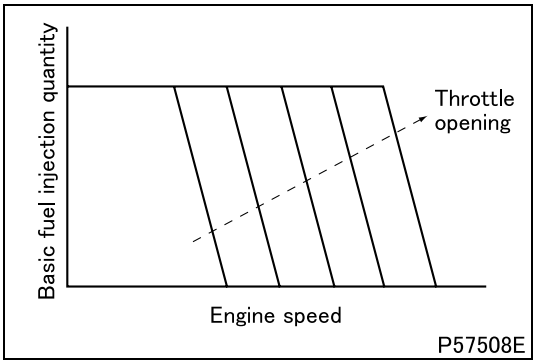

(2) Basic fuel injection quantity

- The basic fuel injection quantity is determined in accordance with the engine speed and throttle opening.

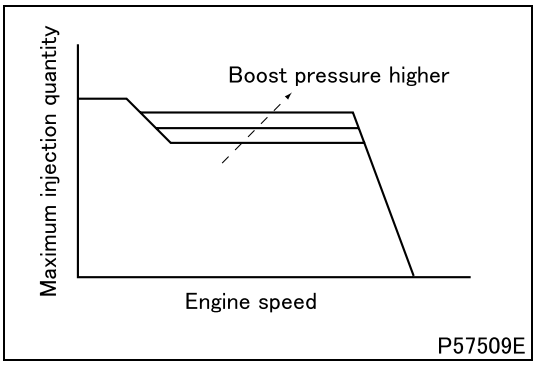

(3) Maximum injection quantity

- The maximum injection quantity is calculated from the engine speed and boost pressure.

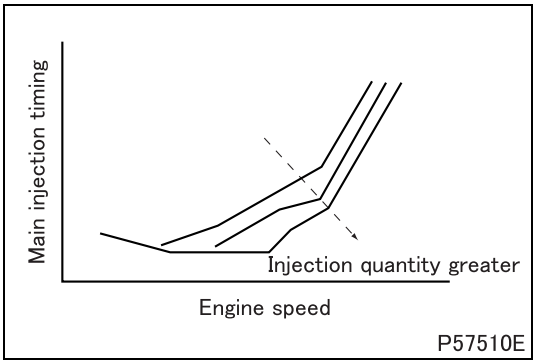

2.4 Fuel injection timing control

(1) Main injection timing

- The main injection timing is calculated from the fuel injection quantity and engine speed.

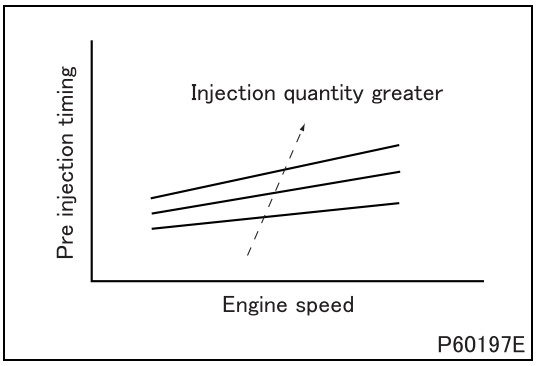

(2) Pre injection timing

- The pre injection timing is calculated from the fuel injection quantity and engine speed.

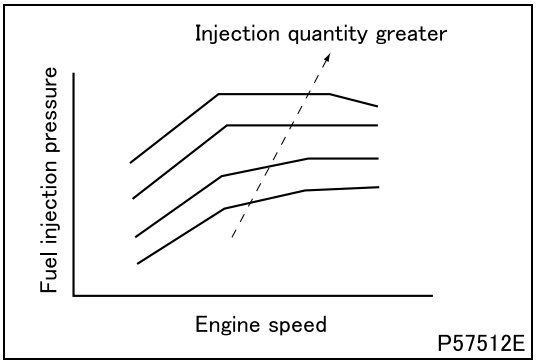

2.5 Fuel injection timing control

- The fuel injection pressure is calculated from the fuel injection quantity and engine speed.

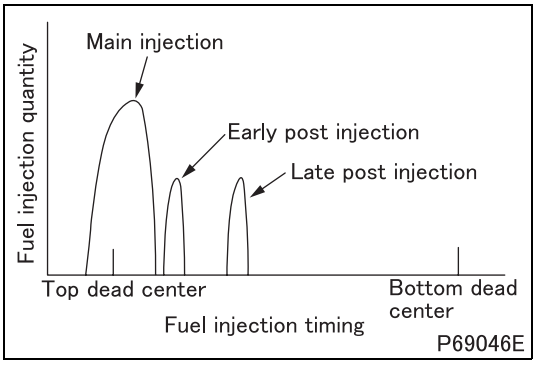

2.6 Fuel injection control for DPF regeneration

- Fuel injection control for diesel particular filter regeneration is performed in such a way, with early post injection and late post injection added after conventional fuel injection (main injection), exhaust gas temperature is increased to burn out particulate matter (PM) collected in the DPF.

2.7 Warm-up acceleration function

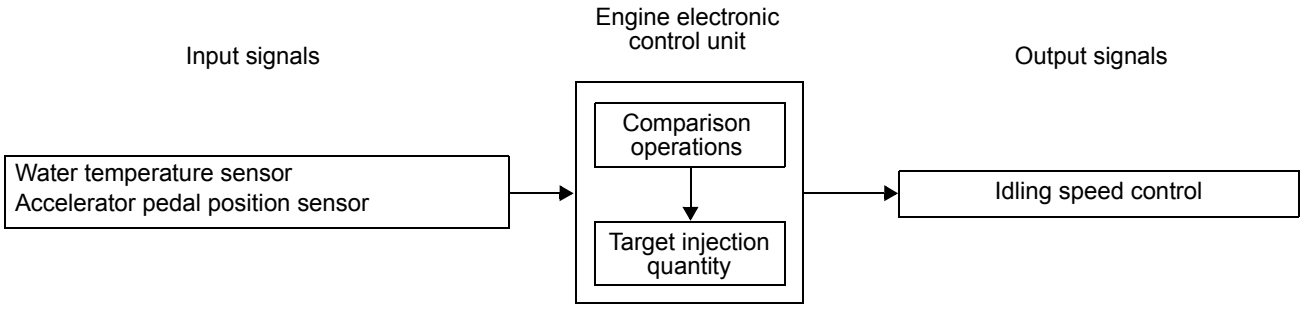

- The warm-up acceleration function accelerates engine warm-up by varying the engine's idling speed in accordance with the engine's coolant temperature.

2.8 Auxiliary brake function

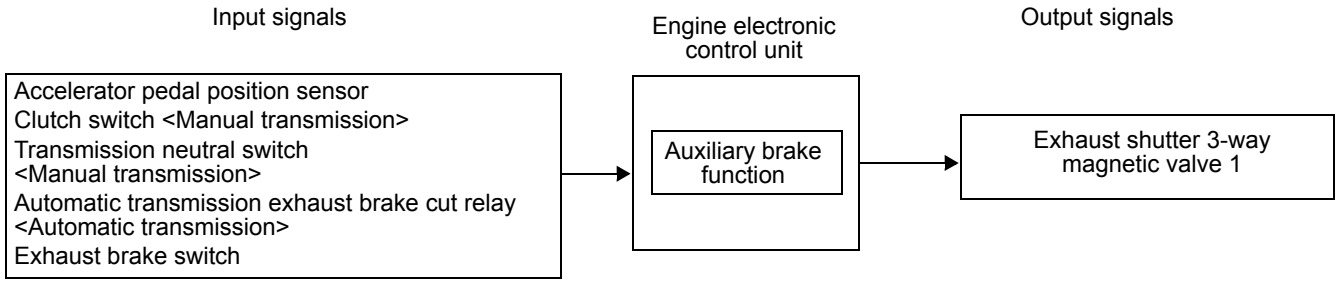

- The auxiliary brake function activates or deactivates the exhaust shutter 3-way magnetic valve 1 according to the vehicle condition to control the exhaust brake.

2.9 Idle-up function

- The idle-up function increases the engine idling speed when a load is applied to the engine by other system (such as air conditioner, PTO) or when the warm-up acceleration function and DPF regeneration are activated.

2.10 Alteration of electronic control unit data (coding function)

- Vehicle information and equipment specifications are registered in each engine electronic control unit as coded data (coding data).
- When an engine electronic control unit or some equipment is replaced, it is necessary to alter registered related data or register new related data using a Multi-Use Tester (for details, see REGISTRATION AND ALTERATION OF DATA IN ENGINE ELECTRONIC CONTROL UNIT).
- For data alteration/registration and data write operation, contact your nearest MITSUBISHI FUSO dealer or MITSUBISHI FUSO TRUCK OF AMERICA, Inc.

2.11 Resetting the diesel particulate filter related information (resetting electronic control unit)

- In the diesel particulate filter regeneration control system, the engine electronic control unit accumulates various information to control the diesel particulate filter regeneration as diesel particulate filter history.
- If the diesel particulate filter cleaning switch was used, these accumulated data are automatically initialized at diesel particulate filter cleaning for regeneration. In the case where the diesel particulate filter regeneration involved the replacement of ceramic filter, etc., however, the initialization of accumulated data is impossible and therefore it is necessary to reset diesel particulate filter related information (the electronic control unit) using a Multi-Use Tester. (For reset procedure, see Gr15.)
- It is necessary to reset diesel particulate filter related information (the electronic control unit) after the following operations are performed.
  - Replacement of diesel particulate filter ceramic filter
  - Cleaning of diesel particulate filter ceramic filter

2.12 Diagnostic Function

(1) Overview

- The system and associated sensors are constantly monitored for faults that can occur under different conditions. When the electronic control unit determines that a fault status is established, it issues the corresponding fault code and starts operation in the fault mode. The relevant warning lamp in the meter cluster is lit at the same time.
- When control is performed during a failure, the system function is limited to ensure the safety of the vehicle and driver.

(2) Reading fault code

- The electronic control unit stores fault codes in the memory, which can be read by use of a scanning tool (General Scanning Tool or Multi-Use Tester) or through the number of flashings of the warning lamp (flash code) in the meter cluster.
- Diagnosis codes shown by the scanning tool are more specific than fresh codes.

(3) ON/OFF of warning lamp and display/erase of fault code on scanning tool

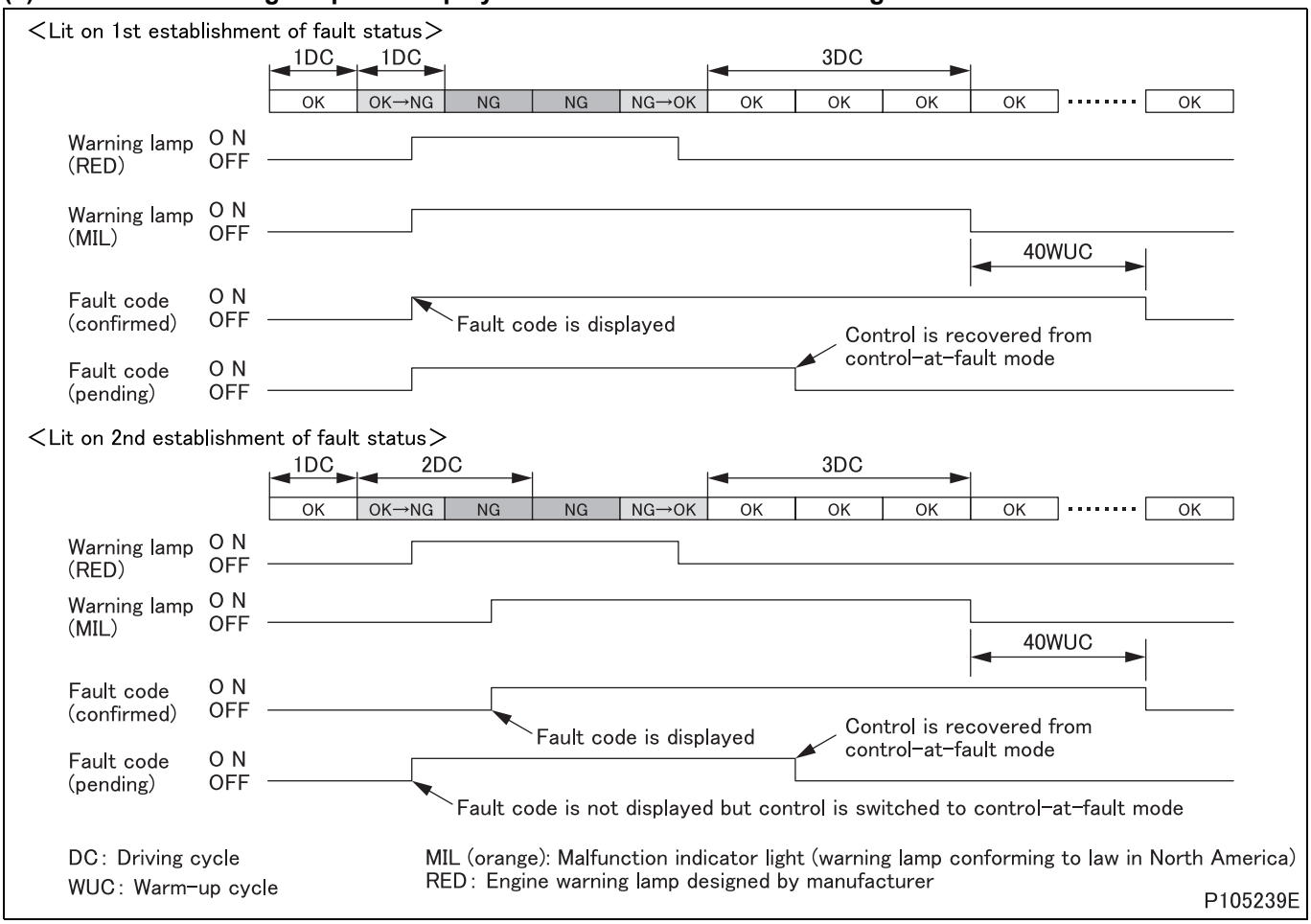

- The lighting of warning lamp is effected in two ways depending on fault status as follows.
  - Lit on 1st establishment of fault status (when fault is determined during 1st driving cycle)
  - Lit on 2nd establishment of fault status (when fault is recognized during 1st driving cycle and determined on 2nd driving cycle)
- Warning lamp is extinguished on 4th driving cycle after the electronic control unit is back to normal control mode.
- Fault code on scanning tool is erased in two ways as follows.
  - Erased as desired by means of the scanning tool's (General Scanning Tool or Multi-Use Tester) memory clear function
  - Automatically erased by the electronic control unit on continuation of 40 warm-up cycles in normal condition after warning lamp OFF

- The driving cycle is (a period of a series of engine operations) from engine start-up with starter switch ON to storage of issued diagnosis code by the electronic control unit with starter switch OFF.
- The warm-up cycle is a period from rise to fall in engine coolant temperature (Next warm-up cycle begins on rise of engine coolant temperature after fall).

M E M O

3. Electronic Control Unit Connection Diagram

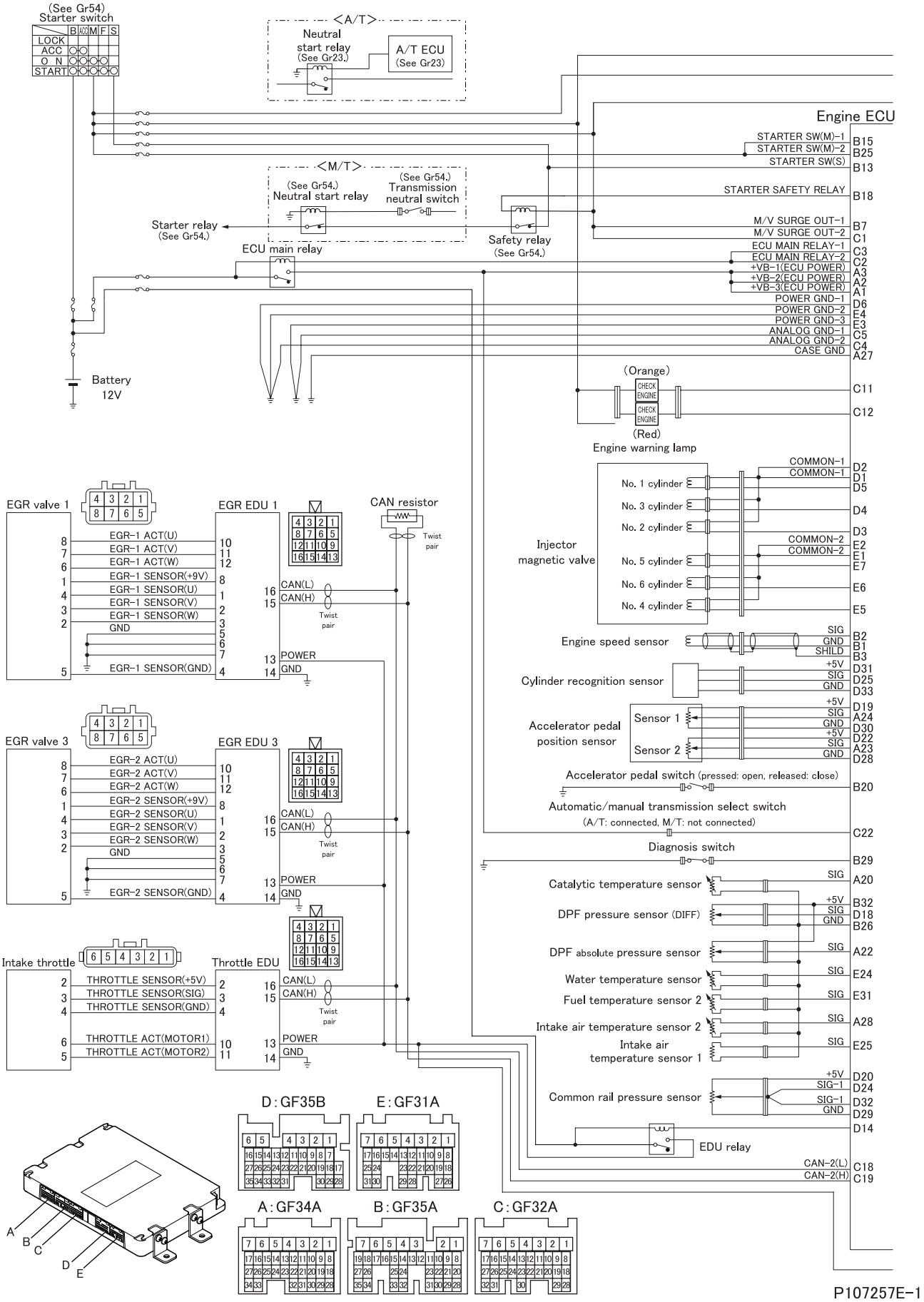

P107257E-1

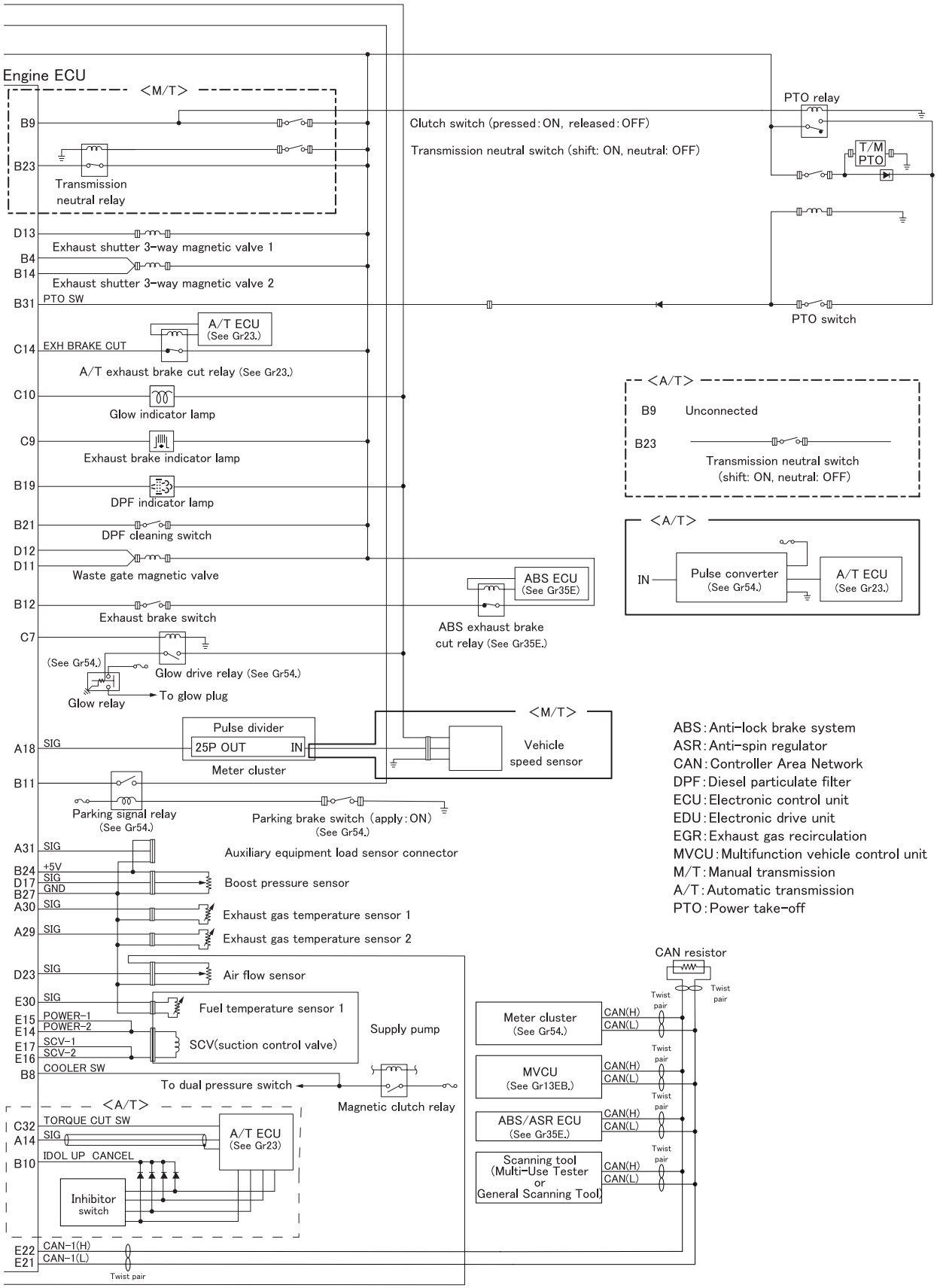
Engine ECU
<M/T>
B9
B23
Transmission neutral relay
Clutch switch (pressed: ON, released: OFF)
Transmission neutral switch (shift: ON, neutral: OFF)
PTO relay
T/M PTO
PTO switch
D13
Exhaust shutter 3-way magnetic valve 1
B4
B14
Exhaust shutter 3-way magnetic valve 2
B31
PTO SW
A/T ECU (See Gr23.)
C14
EXH BRAKE CUT
A/T exhaust brake cut relay (See Gr23.)
C10
Glow indicator lamp
C9
Exhaust brake indicator lamp
B19
DPF indicator lamp
B21
DPF cleaning switch
D12
D11
Waste gate magnetic valve
ABS ECU (See Gr35E)
B12
Exhaust brake switch
ABS exhaust brake cut relay (See Gr35E.)
C7
(See Gr54.)
Glow drive relay (See Gr54.)
Glow relay
To glow plug
<A/T>
B9 Unconnected
B23
Transmission neutral switch (shift: ON, neutral: OFF)
<A/T>
IN
Pulse converter (See Gr54.)
A/T ECU (See Gr23.)
<M/T>
Pulse divider
25P OUT IN
Meter cluster
A18
SIG
Vehicle speed sensor
B11
Parking signal relay (See Gr54.)
Parking brake switch (apply: ON) (See Gr54.)
A31
SIG
Auxiliary equipment load sensor connector
B24
+5V
D17
SIG
B27
GND
Boost pressure sensor
A30
SIG
Exhaust gas temperature sensor 1
A29
SIG
Exhaust gas temperature sensor 2
D23
SIG
Air flow sensor
E30
SIG
Fuel temperature sensor 1
E15
POWER-1
E14
POWER-2
E17
SCV-1
E16
SCV-2
SCV(suction control valve)
Supply pump
B8
COOLER SW
To dual pressure switch
Magnetic clutch relay
<A/T>
C32
TORQUE CUT SW
A14
SIG
A/T ECU (See Gr23)
B10
IDOL UP CANCEL
Inhibitor switch
E22
CAN-1(H)
E21
CAN-1(L)
Twist pair
CAN resistor
Twist pair
Meter cluster (See Gr54.)
CAN(H)
CAN(L)
Twist pair
MVCU (See Gr13EB.)
CAN(H)
CAN(L)
Twist pair
ABS/ASR ECU (See Gr35E.)
CAN(H)
CAN(L)
Twist pair
Scanning tool (Multi-Use Tester or General Scanning Tool)
CAN(H)
CAN(L)
ABS: Anti-lock brake system
ASR: Anti-spin regulator
CAN: Controller Area Network
DPF: Diesel particulate filter
ECU: Electronic control unit
EDU: Electronic drive unit
EGR: Exhaust gas recirculation
MVCU: Multifunction vehicle control unit
M/T: Manual transmission
A/T: Automatic transmission
PTO: Power take-off

P107257E-2

1. Diagnosis Procedure

- Perform the inspection in accordance with the following flowchart.

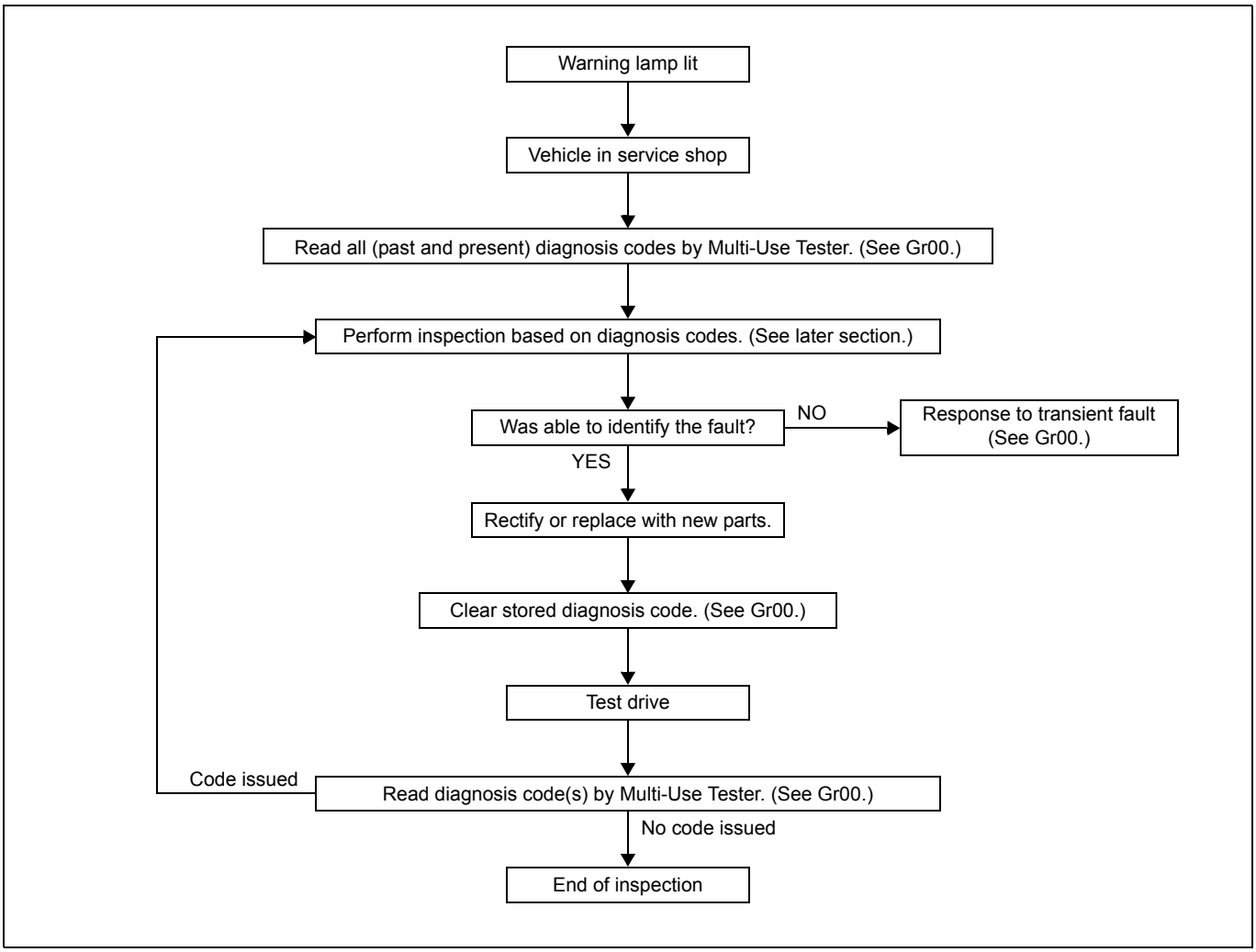

2. Diagnostic Precautions

- Before measuring voltage, check the charge and specific gravity of the battery. If system inspection is performed with the battery uncharged or reduced in specific gravity, accurate measurements cannot be achieved.
- Before disconnecting battery cables, harnesses and connectors, set the starter switch to LOCK or OFF, then allow at least 20 seconds.
- To avoid having electrical parts damaged, set the starter switch and lighting switch to LOCK or OFF before reconnecting battery cables, harnesses and connectors.
- When performing measurement with the tester, internal circuit and other electrical parts of the electronic control unit could be damaged by the test bar. To avoid it, handle the test bar carefully not to cause a short-circuit failure between connector terminals or between connector and body.
- Resistance is affected by temperature. Determine the necessity of resistance measurement by reference to given temperature specification as a guide. Otherwise, use normal temperature (10 to 35°C {50 to 95°F}) as the measuring condition.
- To start the engine, be sure to connect the connector of the SCV (suction control valve) to the engine harness. If the engine is started without connecting the SCV (suction control valve) connector, the engine electronic control unit cannot control the supply pump and the fault of the engine may result.
- If the electronic control unit is replaced with a new one, some data must be registered in the new electronic control unit for proper engine control. This also applied to the case when replacing the electronic control unit with the one that has been used in other vehicle. (See “6. Registration and Alteration of Data in Engine Electronic Control Unit”.)

3. Inspections Based on Fault Codes

3.1 Fault code list

- Fault codes can be monitored through the scanning tool (General Scanning Tool or Multi-Use Tester) or the flashing of the warning lamp in the meter cluster.
- There are two kinds of fault codes, i.e., fault code displayed by the General Scanning Tool or Multi-Use Tester and flash code given by the flashing of the warning lamp.
- Scanning tool (General Scanning Tool or Multi-Use Tester) can display diagnosis codes that are more specific than flash codes.
- Diagnosis codes asterisked in the list differ in action of the warning light depending on the type of faults. (For details on fault diagnosis condition, see “Inspection against Each Diagnosis Code”.)

Fault code		Monitor	Fault (outline)	Warning		Multi-Use Tester indication	Fault diagnosis period
Diagnosis code	Flash code			Orange (MIL)	Red		
P0016	64	Asynchronism between both speed sensors (Engine speed sensor, Cylinder recognition sensor)	Gap phase shift	O		Ne SNSR Offset/Backup Mode	IMD
P0069	32	Characteristic abnormality of boost pressure sensor	Gain and offset drift	O		Boost Press SNSR (Correlation)	2DC
P0087	11	Abnormality of common rail pressure (pressure: low)	Rail pressure regulator adjustment saturated	O		CRS (Too Low)	IMD
P0088	11	Abnormality of common rail pressure (pressure: high)	Plausibility	O		CRS (Too High)	IMD
P0089	63	Abnormality of SCV (suction control valve)	Overload (valve stuck)		O	MPROP (Over Load)	IMD
P0091	63	Abnormality of SCV (suction control valve)	• Short circuit ground (Circuit between suction control valve and electronic control unit is short-circuited to ground.) • Open circuit (Circuit between suction control valve and electronic control unit is short-circuited to ground.)	O		MPROP (Low)	IMD
P0092	63	Abnormality of SCV (suction control valve)	Short circuit battery (Battery circuit shorted between suction control valve and electronic control unit)	O		MPROP (High)	IMD
P0093	36	Abnormality of common rail pressure (fuel leakage)	Fuel leakage		O	CRS (Fuel Leak)	IMD
P0097	09	Abnormality of intake air temperature sensor 2	Low signal range check	O		INT Air Temp SNSR2 (Low)	IMD
P0098	09	Abnormality of intake air temperature sensor 2	High signal range check	O		INT Air Temp SNSR2 (High)	IMD
P0101	17	Characteristic abnormality in air flow sensor	Gain and offset drift	O		Airflow Sensor (Plausibility)	2DC
P0102	17	Abnormality of air flow sensor	Low signal range check	O		Airflow Sensor (Low)	IMD
P0103	17	Abnormality of air flow sensor	High signal range check	O		Airflow Sensor (High)	IMD

IMD: Immediate

DC [Driving cycle]: “Starter switch ON to start engine till starter switch OFF” constitutes 1 driving cycle.

Fault code		Monitor	Fault (outline)	Warning		Multi-Use Tester indication	Fault diagnosis period
Diagnosis code	Flash code			Orange (MIL)	Red		
P0112	44	Abnormality of intake air temperature sensor 1	Low signal range check	O		INT Air Temp SNSR (Low)	2DC
P0113	44	Abnormality of intake air temperature sensor 1	High signal range check	O		INT Air Temp SNSR (High)	2DC
P0116	21	Characteristic abnormality of water temperature sensor	• Gain Drift • Offset Drift	O		Water Temp SNSR (Plausibility)	2DC
P0117	21	Abnormality of water temperature sensor	Low signal range check	O		Water Temp SNSR (Low)	IMD
P0118	21	Abnormality of water temperature sensor	High signal range check	O		Water Temp SNSR (High)	IMD
P0122	24	Abnormality of accelerator pedal position sensor 1	Low signal range check	O		Accel Pedal Sensor 1	IMD
P0123	24	Abnormality of accelerator pedal position sensor 1	High signal range check	O		Accel Pedal Sensor 1	IMD
P0148	36	Operation of pressure limiter	High rail pressure check		O	CRS (Fuel Delivery)	IMD
P0181	41	Characteristic abnormality of fuel temperature sensor 1 and 2	Gain and offset drift	O		Fuel Temp Sensor (Plausibility)	2DC
P0182	41	Abnormality of fuel temperature sensor 1	Low signal range check	O		Fuel Temp Sensor (inlet) Low	2DC
P0183	41	Abnormality of fuel temperature sensor 1	High signal range check	O		Fuel Temp Sensor (inlet) High	2DC
P0187	56	Abnormality of fuel temperature sensor 2	Low signal range check	O		Fuel Temp Sensor (outlet)	2DC
P0188	56	Abnormality of fuel temperature sensor 2	High signal range check	O		Fuel Temp Sensor (outlet)	2DC
*P0191	11	Characteristic abnormality of common rail pressure sensor	• Offset • Output unchanged	O	O	CRS Pressure SNSR (Plausibility)	IMD
P0192	11	Abnormality of common rail pressure sensor	Low signal range check	O		CRS Pressure SNSR (Low)	IMD
P0193	11	Abnormality of common rail pressure sensor	High signal range check	O		CRS Pressure SNSR (High)	IMD
P0201	37	Abnormality of injector magnetic valve (No. 1 cylinder)	Injector open circuit (No. 1 cylinder)	O		Injector M/V-Cylinder 1 (Load)	IMD
P0202	38	Abnormality of injector magnetic valve (No. 2 cylinder)	Injector open circuit (No. 2 cylinder)	O		Injector M/V-Cylinder 2 (Load)	IMD
P0203	39	Abnormality of injector magnetic valve (No. 3 cylinder)	Injector open circuit (No. 3 cylinder)	O		Injector M/V-Cylinder 3 (Load)	IMD
P0204	08	Abnormality of injector magnetic valve (No. 4 cylinder)	Injector open circuit (No. 4 cylinder)	O		Injector M/V-Cylinder 4 (Load)	IMD
P0205	46	Abnormality of injector magnetic valve (No. 5 cylinder)	Injector open circuit (No. 5 cylinder)	O		Injector M/V-Cylinder 5 (Load)	IMD

IMD: Immediate

DC [Driving cycle]: “Starter switch ON to start engine till starter switch OFF” constitutes 1 driving cycle.

Fault code		Monitor	Fault (outline)	Warning		Multi-Use Tester indication	Fault diagnosis period
Diagnosis code	Flash code			Orange (MIL)	Red		
P0206	47	Abnormality of injector magnetic valve (No. 6 cylinder)	Injector open circuit (No. 6 cylinder)	O		Injector M/V-Cylinder 6 (Load)	IMD
P0219	07	Engine overrun	High signal range check		O	Engine Overrunning	IMD
P0222	16	Abnormality of accelerator pedal position sensor 2	Low signal range check	O		Accel Pedal Sensor 2	IMD
P0223	16	Abnormality of accelerator pedal position sensor 2	High signal range check	O		Accel Pedal Sensor 2	IMD
P0226	28	Abnormality of intake throttle (position sensor)	• Abnormal Position • Abnormal Ref voltage	O		Throttle Valve Position	IMD
P0227	61	Abnormality of auxiliary equipment load sensor	Low signal range check		O	PTO Accel Sensor	IMD
P0228	61	Abnormality of auxiliary equipment load sensor	High signal range check		O	PTO Accel Sensor	IMD
P0234	54	Abnormality of boost pressure	Overboost	O		Over Boost	IMD
P0236	32	Characteristic abnormality of boost pressure sensor	Gain and offset drift	O		Boost Press SNSR (Plausi)	2DC
P0237	32	Abnormality of boost pressure sensor	Low signal range check	O		Boost Press SNSR (Low)	IMD
P0238	32	Abnormality of boost pressure sensor	High signal range check	O		Boost Press SNSR (High)	IMD
P0244	51	System monitor of waste gate	Waste gate system check	O		Wastegate M/V	2DC
P0245	51	Abnormality of waste gate magnetic valve	• Short circuit ground • Open circuit	O		Wastegate M/V (Low)	2DC
P0246	51	Abnormality of waste gate magnetic valve	Short circuit battery	O		Wastegate M/V (High)	2DC
P0253	22	Abnormality of common rail pressure	Too large rail pressure (too high)		O	Common Rail Pressure Defect	IMD
P0254	23	Abnormality of common rail pressure	Too large rail pressure (high)		O	Common Rail Pressure Defect	IMD
P0256	23	Supply pump signal out of serviceable range	Too large supply pump discharge pressure		O	Common Rail Pressure High (Pump)	IMD
P0257	23	Abnormality of delivery by supply pump	Abnormal supply pump discharge pressure (too rapid pressure change)		O	Common Rail Pressure Low (Pump)	IMD
P0259	23	Supply pump signal out of serviceable range	Large supply pump discharge pressure		O	Common Rail Pressure High (Pump)	IMD
P0336	15	Abnormality of engine speed sensor	• No pulse check • Gap phase shift	O		Engine Revolution SNSR	IMD
P0339	14	Abnormality of engine speed sensor	Abnormal pulse count	O		Engine Revolution SNSR (Plausi)	IMD
P0340	12	Abnormality of cylinder recognition sensor	No pulse check	O		Camshaft Position SNSR	IMD
P0344	64	Abnormality of cylinder recognition sensor	Abnormal pulse count	O		Camshaft Position SNSR (Plausi)	IMD
P0383	26	Abnormality of glow drive relay	Short circuit ground			Relay for Glow Relay	IMD

IMD: Immediate

DC [Driving cycle]: “Starter switch ON to start engine till starter switch OFF” constitutes 1 driving cycle.

Fault code		Monitor	Fault (outline)	Warning		Multi-Use Tester indication	Fault diagnosis period
Diagnosis code	Flash code			Orange (MIL)	Red		
P0384	26	Abnormality of glow drive relay	Short circuit battery			Relay for Glow Relay	IMD
P0401	02	Exhaust gas recirculation system (insufficient flow rate of exhaust gas recirculation gas)	Insufficient exhaust gas recirculation flow	O		EGR Flow (Insufficient)	2DC
P0402	02	Exhaust gas recirculation system (excessive flow rate of exhaust gas recirculation gas)	Excessive exhaust gas recirculation flow	O		EGR Flow (Excessive)	2DC
P0403	67	Abnormality in exhaust gas recirculation valve (actuator)	• Actuator short circuit • Actuator open circuit • Power supply too high • Power supply too low	O		EGR1 (Actuator Circuit)	IMD
P0404	02 67	Abnormality in exhaust gas recirculation valve (actuator)	• Actuator stuck • Initialization error • Valve not close	O		EGR System	IMD
P0409	67	Abnormality in exhaust gas recirculation valve (position sensor)	Abnormal position	O		EGR1 (Position Sensor)	IMD
P0427	13	Abnormality of catalytic temperature sensor	Low signal range check	O		EXH Gas Temp SNSR1 (Low)	2DC
P0428	13	Abnormality of catalytic temperature sensor	High signal range check	O		EXH Gas Temp SNSR1 (High)	2DC
P0471	98	Characteristic abnormality of DPF absolute pressure sensor	Gain and offset drift	O		DPF Press SNSR (Plausi)	2DC
P0472	98	Abnormality of DPF absolute pressure sensor	Low signal range check	O		DPF Press SNSR (Low)	IMD
P0473	98	Abnormality of DPF absolute pressure sensor	High signal range check	O		DPF Press SNSR (High)	IMD
P0477	94	Abnormality of exhaust shutter 3-way magnetic valve 2	• Short circuit ground • Open circuit	O		Exhaust Brake PWR (Low)	IMD
P0478	94	Abnormality of exhaust shutter 3-way magnetic valve 2	Short circuit battery	O		Exhaust Brake PWR (High)	IMD
P0500	25	Abnormality of vehicle speed sensor	Signal invalid		O	Vehicle Speed Sensor	IMD
P0502	25	Abnormality of vehicle speed sensor	Too low		O	Vehicle Speed Sensor (Low)	IMD
P0503	25	Abnormality of vehicle speed sensor	Too high		O	Vehicle Speed Sensor (High)	IMD
P0512	–	Abnormality of starter switch	Short-circuited to battery			Starter SW	IMD
P0545	87	Abnormality of DPF temperature sensor 1	Low signal range check	O		DPF Temp SNSR (upstream) Low	IMD
P0546	87	Abnormality of DPF temperature sensor 1	High signal range check	O		DPF Temp SNSR (upstream) High	IMD
P0562	79	Abnormality of battery voltage	Low signal range check	O		Power Supply Voltage (Low)	2DC

IMD: Immediate

DC [Driving cycle]: “Starter switch ON to start engine till starter switch OFF” constitutes 1 driving cycle.

Fault code		Monitor	Fault (outline)	Warning		Multi-Use Tester indication	Fault diagnosis period
Diagnosis code	Flash code			Orange (MIL)	Red		
P0563	79	Abnormality of battery voltage	High signal range check	O		Power Supply Voltage (High)	2DC
P0600	64	Abnormality in controller area network 1 communication (speed limitation device)	• Controller area network • Message timeout		O	CAN Communication	IMD
P0604	33	Abnormality in engine electronic control unit	Hardware check	O		ECU Hardware (RAM)	IMD
P0605	33	Abnormality in engine electronic control unit	Hardware check	O	O	ECU System (Hardware)	IMD
P0606	33	Abnormality in engine electronic control unit	Hardware check		O	ECU Hardware (Main CPU)	IMD
P0607	33	Abnormality in engine electronic control unit	Hardware check		O	ECU Hardware (Sub CPU)	IMD
P0611	99	Abnormality of injector adjustment data	Absence of code information		O	No adjustment data of injector	IMD
P0616	48	Abnormality of safety relay	Short circuit battery		O	Starter Safety Relay (High)	IMD
P0617	48	Abnormality of safety relay	• Short circuit ground • Open circuit		O	Starter Safety Relay (Low)	IMD
P062B	99	Abnormality of injector adjustment data	Error in code information (Adjustment point error)		O	Abnormal adjustment data of injector	IMD
P062F	33	Abnormality in engine electronic control unit	Hardware check (EEPROM)	O		ECU System (EEPROM)	IMD
P0642	81	Abnormality of sensor supply voltage 1	Low signal range check	O		Sensor Supply Voltage 1 (Low)	IMD
P0643	81	Abnormality of sensor supply voltage 1	High signal range check	O		Sensor Supply Voltage 1 (High)	IMD
P0652	81	Abnormality of sensor supply voltage 2	Low signal range check	O		Sensor Supply Voltage 2 (Low)	IMD
P0653	81	Abnormality of sensor supply voltage 2	High signal range check	O		Sensor Supply Voltage 2 (High)	IMD
P0685	84	Abnormality of electronic drive unit relay	Electronic drive unit OFF with starter switch ON	O		EDU Relay (Open)	2DC
P0686	84	Abnormality of electronic drive unit relay	Short circuit ground	O		EDU Relay (Low)	2DC
P0687	84	Abnormality of electronic drive unit relay	Short circuit battery	O		EDU Relay (High)	2DC
P0688	84	Abnormality of electronic drive unit relay	Electronic drive unit ON with starter switch OFF			EDU Relay (Over Load)	2DC
P1170	99	Abnormality of injection quantity adjustment data	Data abnormality in electronic control unit		O	Abnormal adjustment data of Q	IMD
P1240	71	Abnormality of flow damper (No. 1 cylinder)	Faulty flow damper check			Flow Limiter-Cylinder 1	IMD
P1241	72	Abnormality of flow damper (No. 2 cylinder)	Faulty flow damper operation			Flow Limiter-Cylinder 2	IMD
P1242	73	Abnormality of flow damper (No. 3 cylinder)	Faulty flow damper check			Flow Limiter-Cylinder 3	IMD
P1243	74	Abnormality of flow damper (No. 4 cylinder)	Faulty flow damper check			Flow Limiter-Cylinder 4	IMD

IMD: Immediate

DC [Driving cycle]: “Starter switch ON to start engine till starter switch OFF” constitutes 1 driving cycle.

Fault code		Monitor	Fault (outline)	Warning		Multi-Use Tester indication	Fault diagnosis period
Diagnosis code	Flash code			Orange (MIL)	Red		
P1244	75	Abnormality of flow damper (No. 5 cylinder)	Faulty flow damper check			Flow Limiter-Cylinder 5	IMD
P1245	76	Abnormality of flow damper (No. 6 cylinder)	Faulty flow damper check			Flow Limiter-Cylinder 6	IMD
P1410	92	Excessive exhaust pressure	Clogged diesel particulate filter		O	Exhaust Absolute Pressure (High)	IMD
P1411	92	Diesel particulate filter is overheated.	Plausibility		O	Excessive exhaust Temperature	IMD
P1412	92	Long lasting abnormality at 1st stage of automatic diesel particulate filter regeneration	Improperly performed automatic regeneration of diesel particulate filter			DPF Temp Abnormal 1 (Auto) (Low)	IMD
P1413	92	Low temperature abnormality at 2nd stage of automatic diesel particulate filter regeneration	Improperly performed automatic regeneration of diesel particulate filter			DPF Temp Abnormal 2 (Auto) (Low)	IMD
P1414	92	High temperature abnormality at 2nd stage of automatic diesel particulate filter regeneration	Improperly performed automatic regeneration of diesel particulate filter			DPF Temp Abnormal 3 (Auto) (High)	IMD
P1415	92	Long lasting abnormality of automatic diesel particulate filter regeneration	Improperly performed automatic regeneration of diesel particulate filter			DPF Interval Abnormal (Auto)	IMD
P1416	92	Long lasting abnormality at 1st stage of manual diesel particulate filter regeneration	Plausibility		O	DPF Temp Abnormal 1 (Manual) (Low)	IMD
P1417	92	Low temperature abnormality at 2nd stage of manual diesel particulate filter regeneration	Plausibility		O	DPF Temp Abnormal 2 (Manual) (Low)	IMD
P1418	92	High temperature abnormality at 2nd stage of manual diesel particulate filter regeneration	Plausibility		O	DPF Temp Abnormal 3 (Manual) (High)	IMD
P1421	92	High particulate matter deposit level 1	Plausibility		O	PM accumulation amount level 1	IMD
P1422	92	High particulate matter deposit level 2	Plausibility		O	PM accumulation amount level 2	IMD
P1435	92	Diesel particulate filter broken	Efficiency below threshold (blocked diesel particulate filter)	O		Exhaust Relative Pressure (Low)	2DC
P1442	92	Failure of automatic diesel particulate filter regeneration	Improperly performed automatic regeneration of diesel particulate filter			Automatic Reg Error (n>=2)	IMD
P1443	92	Failure of manual diesel particulate filter regeneration (long-lasting abnormality)	Failed manual diesel particulate filter regeneration		O	DPF Interval Abnormal (Manual)	IMD
P1445	92	Time required for automatic diesel particulate filter regeneration	Time-out error			Auto Reg 2nd stage time out n=1	IMD

IMD: Immediate

DC [Driving cycle]: “Starter switch ON to start engine till starter switch OFF” constitutes 1 driving cycle.

Fault code		Monitor	Fault (outline)	Warning		Multi-Use Tester indication	Fault diagnosis period
Diagnosis code	Flash code			Orange (MIL)	Red		
P1446	92	Time required for automatic diesel particulate filter regeneration	Abnormal number of time-out error occurrences			Auto Reg 2nd stage time out n>=2	IMD
P1464	55	Exhaust brake blocking	Abnormality of exhaust brake opening			Auxiliary Brake Choke	IMD
P1474	92	Diesel particulate filter broken	Excessive Delta Pressure		O	DPF Pressure Sensor (Low)	1DC
P1632	95	Abnormality in controller area network 2 communication (exhaust gas recirculation electronic drive unit 1)	Message timeout	O		CAN (EGR Time out)	IMD
P1634	95	Abnormality in controller area network 2 communication (exhaust gas recirculation electronic drive unit 3)	Message timeout	O		CAN (EGR3 Time out)	IMD
P1635	96	Abnormality in controller area network 2 communication (intake throttle)	Message timeout	O		CAN (Intake Throttle)	IMD
P1660	29	Abnormality of diesel particulate filter indicator lamp	• Short circuit ground • Open circuit			DPF Lamp Control Circuit (Low)	IMD
P1661	29	Abnormality of diesel particulate filter indicator lamp	• Short circuit battery • Conformity between diesel particulate filter lamp ON command and electronic control unit terminal voltage is checked.			DPF Lamp Control Circuit (High)	IMD
P2002	92	Diesel particulate filter broken	Excessive Delta pressure	O		DPF MFF	2DC
P2032	88	Abnormality of DPF temperature sensor 2	Low signal range check	O		Exhaust Gas Temp (Low)	2DC
P2033	88	Abnormality of DPF temperature sensor 2	High signal range check	O		Exhaust Gas Temp (High)	2DC
P2080	13	Relative check between catalytic temperature sensor and DPF temperature sensor 1	Gain and offset drift	O		DOC Temp SNSR	2DC
P2084	87	Relative check between DPF temperature sensor 1 and 2	Gain and offset drift	O		DOC Temp SNSR (Plausibility)	2DC
P2102	28	Abnormality of intake throttle (actuator)	• Short circuit ground • Open circuit • Short circuit battery • Actuator stuck	O		TVA (Short)	IMD
P2108	96	Abnormality of intake throttle (target abnormality)	Target out of range	O		TVA (Controller)	IMD
P2120	65	Abnormality of accelerator pedal switch	Plausibility			Acc Switch	IMD
P2135	58	Relative check of accelerator pedal position sensors (1 and 2)	There is too large difference between sensor 1 and 2.	O		TVA SNSR (Voltage)	IMD

IMD: Immediate

DC [Driving cycle]: “Starter switch ON to start engine till starter switch OFF” constitutes 1 driving cycle.

Fault code		Monitor	Fault (outline)	Warning		Multi-Use Tester indication	Fault diagnosis period
Diagnosis code	Flash code			Orange (MIL)	Red		
P2146	82	Abnormality of injector magnetic valve power supply circuit (No. 1, 3 and 5 cylinders)	Open circuit (No. 1, 3 and 5 cylinders)	O		Injector Bank 1 (Plausibility)	IMD
P2147	82	Injector magnetic valve (No. 1, 3 and 5 cylinders)	• Injector short circuit ground • Injector open circuit (No. 1, 3 and 5 cylinders)	O		Injector Bank 1 (Low)	IMD
P2148	82	Injector magnetic valve (No. 1, 3 and 5 cylinders)	Injector short circuit battery (No. 1, 3 and 5 cylinders)	O		Injector Bank 1 (High)	IMD
P2149	82	Injector magnetic valve (No. 2, 4 and 6 cylinders)	Open circuit (No. 2, 4 and 6 cylinders)	O		Injector Bank 2 (Plausibility)	IMD
P2150	82	Injector magnetic valve (No. 2, 4 and 6 cylinders)	• Injector short circuit ground • Injector open circuit (No. 2, 4 and 6 cylinders)	O		Injector Bank 2 (Low)	IMD
P2151	82	Injector magnetic valve (No. 2, 4 and 6 cylinders)	Injector short circuit battery (No. 2, 4 and 6 cylinders)	O		Injector Bank 2 (High)	IMD
P2153	82	Abnormality in injector magnetic valve driving circuit charge voltage	Charge rate inadequate	O		Injector Bank 3 (Low)	IMD
P2154	82	Abnormality in injector magnetic valve driving circuit charge voltage	Charge rate excessive	O	O	Injector Bank 3 (High)	IMD
P2170	93	Abnormality of exhaust shutter 3-way magnetic valve 1	• Short circuit ground • Open circuit	O		Exhaust Valve Act (Gnd)	IMD
P2171	93	Failure of exhaust shutter 3-way magnetic valve 1	Short circuit battery	O		Exhaust Valve Act (Batt)	IMD
P2199	09	Characteristic abnormality of intake air temperature sensor 2	Gain and offset drift	O		EGR Temp Sensor (Correlation)	2DC
P2228	19	Abnormality of atmospheric pressure sensor (built into engine electronic control unit)	Low signal range check	O		Atm Press SNSR (Low)	IMD
P2229	19	Abnormality of atmospheric pressure sensor (built into engine electronic control unit)	High signal range check	O		Atm Press SNSR (High)	IMD
P2413	95	Abnormality in exhaust gas recirculation valve (target abnormality)	Target out of range	O		EGR System	IMD
P2453	97	Characteristic abnormality of DPF pressure sensor (DIFF)	Gain and offset drift	O		DPF Diff SNSR (Plausi) & MFF	2DC
P2454	97	Abnormality of DPF pressure sensor (DIFF)	Low signal range check	O		DPF Diff SNSR (Low) & MFF	IMD
P2455	97	Abnormality of DPF pressure sensor (DIFF)	High signal range check	O		DPF Diff SNSR (High) & MFF	IMD
P2510	83	Abnormality in electronic control unit main relay	Main relay fault over	O		Main Relay (abnormal)	IMD

IMD: Immediate

DC [Driving cycle]: “Starter switch ON to start engine till starter switch OFF” constitutes 1 driving cycle.

Fault code		Monitor	Fault (outline)	Warning		Multi-Use Tester indication	Fault diagnosis period
Diagnosis code	Flash code			Orange (MIL)	Red		
U0002	–	Abnormality in controller area network 2 communication (electronic drive unit)	Controller area network bus OFF	O		Powertrain Local CAN Bus Off	2DC
U0029	–	Abnormality in controller area network 1 communication (electronic control unit)	Controller area network bus OFF	O		Vehicle Communication Bus Off	2DC

IMD: Immediate

DC [Driving cycle]: “Starter switch ON to start engine till starter switch OFF” constitutes 1 driving cycle.

[Fault code]
Diagnosis code: P0016/Flash code: 64
[Monitor]
Asynchronism between both speed sensors (Engine speed sensor, Cylinder recognition sensor)
[Fault (outline)]
Gap phase shift
[Diagnosis check]
- Output signals of engine speed sensor and cylinder recognition sensor are compared for abnormality.

[Code generation condition]
- Abnormality is detected in the number of output pulses from the sensors.
  (Warning lamp is lit and diagnosis code is displayed on first establishment of code generation condition.)

[Diagnosis check timing]
- When code generation condition is established after starter switch ON

[Diagnostic requirement]
- Engine status: in operation (except during start, stop and stall)

[Control effected by electronic control unit during fault]
- Auto cruise control is stopped.
- ISS control is stopped.

[Probable cause of trouble]
- Open-circuit or short-circuit of harness between electronic control unit and engine speed sensor
- Open-circuit or short-circuit of harness between electronic control unit and cylinder recognition sensor
- Abnormality of each connector
- Abnormality of engine speed sensor
- Abnormality of cylinder recognition sensor
- Abnormality of electronic control unit

[Recoverability]
<Control during fault>
- Recovered if signal becomes normal with starter switch in ON position.

<Warning lamp>
- Extinguished at 4th driving cycle after normal signal is input.

<Fault code>
- Automatically cleared at 40th warm up cycle after warning lamp is extinguished. (To clear as desired, erase from the memory.)

Driving cycle : “Starter switch ON to start engine till starter switch OFF” constitutes 1 driving cycle.
Warm up cycle : “Starter switch ON to start engine till starter switch OFF after coolant temperature increased and engine warmed up” constitutes 1 warm up cycle.

[Electronic Control Unit Connection Diagram]

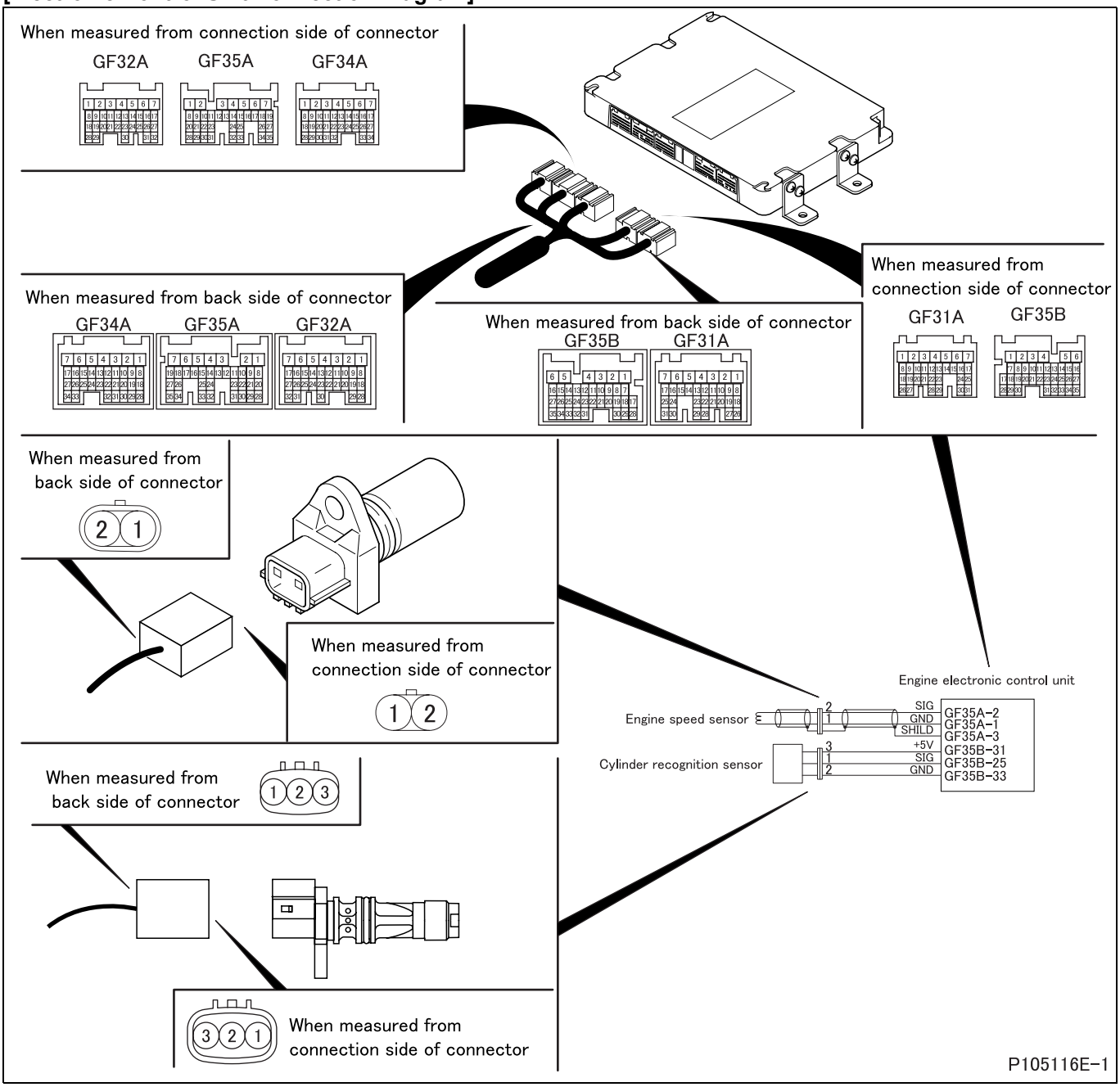

[Parts Identification and Location]

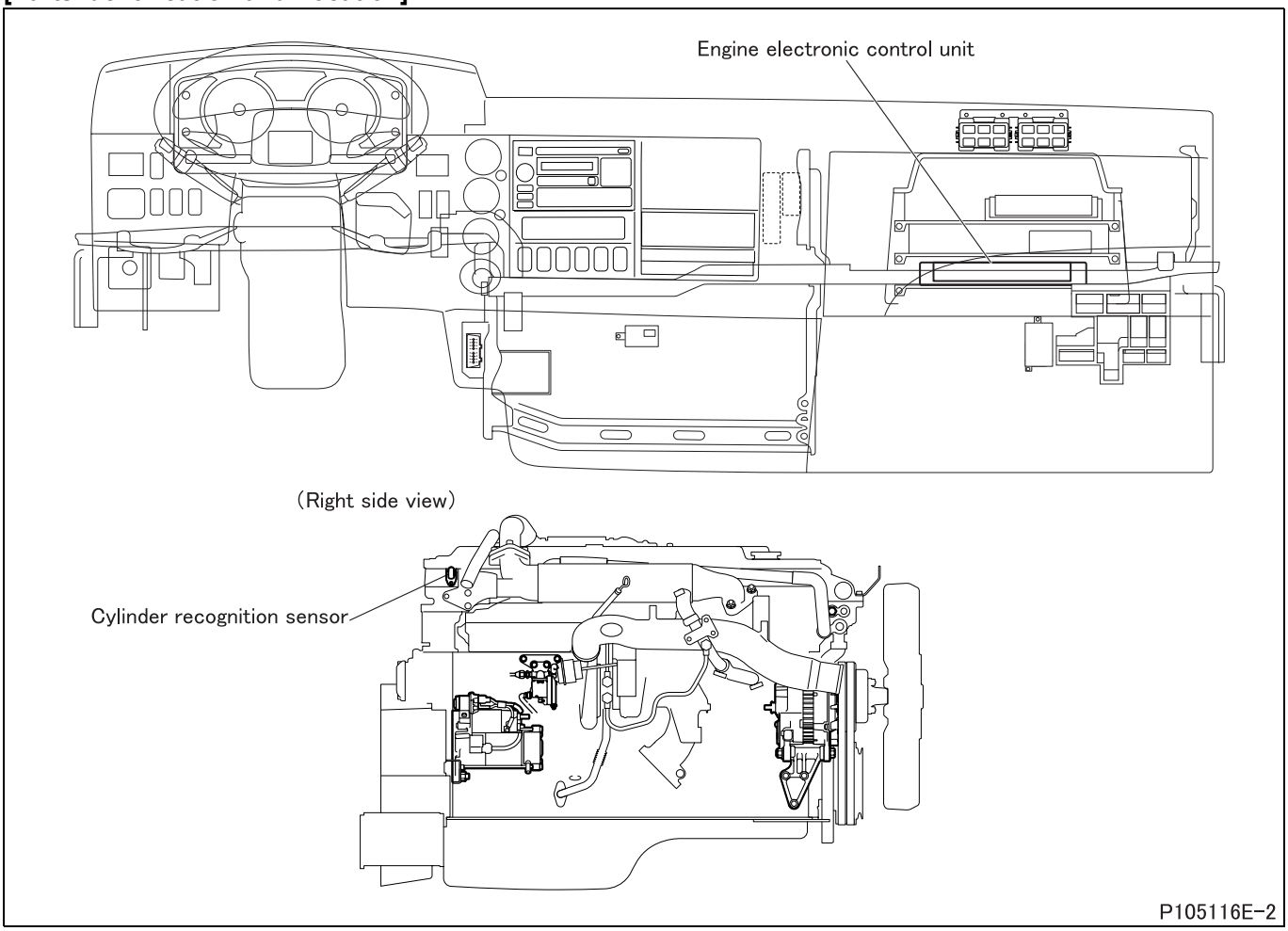

[Fault diagnosis]

- Perform checks in the sequence of the following steps.

Step 1	Inspection items		Inspection by control data
	Maintenance item		**<General Scanning Tool used>** • Measure item “Ne”. **<Multi-Use Tester used>** • Measure item No. 01 “Engine Revolution” of Service Data.
	Inspection condition		–
	Requirements		Same indication as tachometer is given.
	Inspection result (Is the judging standard satisfied?)	YES	Go to transient fault (See Gr00.).
		NO	Go to step 2.

Step 2	Inspection items		Inspection by electronic control unit connector (engine speed sensor)
	Maintenance item		Measure value of resistance between connector (GE35A) terminal No. 1 and 2.
	Inspection condition		Disconnect electronic control unit and harness, and measure from connection side of harness connector.
	Requirements		125.5 ± 17 Ω
	Inspection result (Is the judging standard satisfied?)	YES	Go to step 7.
		NO	Go to step 3.

Step 3	Inspection items		Inspection of engine speed sensor connector
	Maintenance item		Inspection of connector
	Inspection condition		–
	Requirements		• Connector is properly connected. • No trace of water entry is found. • No corrosion is found in terminal. • Connection to terminal is appropriate.
	Inspection result (Is the judging standard satisfied?)	YES	Go to step 4.
		NO	Modify connector.

Step 4	Inspection items		Inspection of engine speed sensor unit
	Maintenance item		Measure value of resistance between connector terminal No. 1 and 2.
	Inspection condition		–
	Requirements		125.5 ± 17 Ω
	Inspection result (Is the judging standard satisfied?)	YES	Go to step 5.
		NO	Replacement of sensor

<Step 4 inspection diagram>

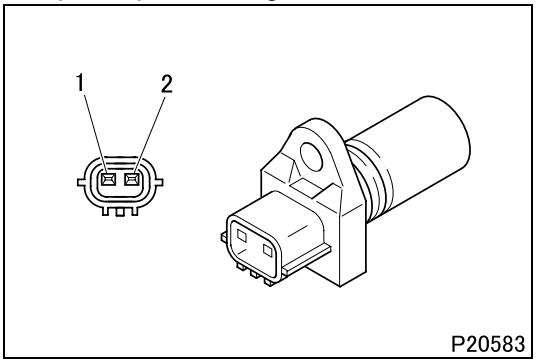

Step 5	Inspection items		Inspection of harness between electronic control unit and engine speed sensor (power supply)
	Maintenance item		Check circuit between sensor connector terminal No. 2 and electronic control unit connector (GF35A) terminal No. 2
	Inspection condition		Disconnect each device from harness and measure from connection side of harness connector.
	Requirements		There is continuity.
	Inspection result (Is the judging standard satisfied?)	YES	Go to step 6.
		NO	Modify harness.

Step 6	Inspection items		Inspection of harness between electronic control unit and engine speed sensor (ground)
	Maintenance item		Check circuit between sensor connector terminal No. 1 and electronic control unit connector (GF35A) terminal No. 1
	Inspection condition		Disconnect each device from harness and measure from connection side of harness connector.
	Requirements		There is continuity.
	Inspection result (Is the judging standard satisfied?)	YES	Go to step 7.
		NO	Modify harness.

Step 7	Inspection items		Inspection by electronic control unit connector (signal) (cylinder recognition sensor)
	Maintenance item		Measure value of voltage between connector (GF35B) terminal No. 25 (+) and 33 (–).
	Inspection condition		• Measure from back side of harness connector with each device connected to harness. • Starter switch: ON
	Requirements		1 V or more
	Inspection result (Is the judging standard satisfied?)	YES	Go to step 10.
		NO	Go to step 8.

Step 8	Inspection items		Inspection by electronic control unit connector (power supply) (cylinder recognition sensor)
	Maintenance item		Measure value of voltage between connector (GF35B) terminal No. 31 (+) and 33 (–).
	Inspection condition		• Measure from back side of harness connector with each device connected to harness. • Starter switch: ON
	Requirements		5 V
	Inspection result (Is the judging standard satisfied?)	YES	Go to step 9.
		NO	Go to step 10.

Step 9	Inspection items		Inspection by electronic control unit connector (ground) (cylinder recognition sensor)
	Maintenance item		Measure value of voltage between connector (GF35B) terminal No. 33 and (GF31A) 3.
	Inspection condition		• Measure from back side of harness connector with each device connected to harness. • Starter switch: ON
	Requirements		0 V
	Inspection result (Is the judging standard satisfied?)	YES	Go to step 11.
		NO	Go to step 10.

Step 10	Inspection items		Inspection of electronic control unit connector
	Maintenance item		Inspection of connector
	Inspection condition		–
	Requirements		• Connector is properly connected. • No trace of water entry is found. • No corrosion is found in terminal. • Connection to terminal is appropriate.
	Inspection result (Is the judging standard satisfied?)	YES	Go to step 17.
		NO	Modify connector.

Step 11	Inspection items		Inspection of cylinder recognition sensor connector
	Maintenance item		Inspection of connector
	Inspection condition		–
	Requirements		• Connector is properly connected. • No trace of water entry is found. • No corrosion is found in terminal. • Connection to terminal is appropriate.
	Inspection result (Is the judging standard satisfied?)	YES	Go to step 12.
		NO	Modify connector.

Step 12	Inspection items		Inspection of cylinder recognition sensor unit
	Maintenance item		Measure value of resistance between connector terminal No. 2 and 3.
	Inspection condition		–
	Requirements		200 to 1800 Ω
	Inspection result (Is the judging standard satisfied?)	YES	Go to step 13.
		NO	Replacement of sensor

<Step 12 inspection diagram>

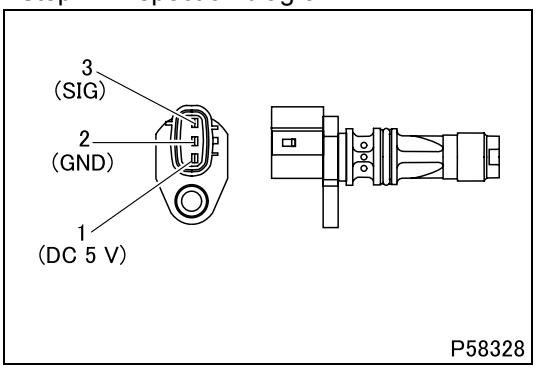

Step 13	Inspection items		Inspection of harness between electronic control unit and cylinder recognition sensor (power supply)
	Maintenance item		Measure value of voltage between sensor connector terminal No. 3 (+) and 2 (–).
	Inspection condition		• Remove connector and measure from harness side. • Starter switch: ON
	Requirements		5 V
	Inspection result (Is the judging standard satisfied?)	YES	Go to step 15.
		NO	Go to step 14.

Step 14	Inspection items		Inspection of harness between electronic control unit and cylinder recognition sensor (power supply)
	Maintenance item		Check circuit between sensor connector terminal No. 3 and electronic control unit connector (GF35B) terminal No. 31
	Inspection condition		Disconnect each device from harness and measure from connection side of harness connector.
	Requirements		There is continuity.
	Inspection result (Is the judging standard satisfied?)	YES	Go to step 17.
		NO	Modify harness.

Step 15	Inspection items		Inspection of harness between electronic control unit and cylinder recognition sensor (ground)
	Maintenance item		Check circuit between sensor connector terminal No. 2 and electronic control unit connector (GF35B) terminal No. 33
	Inspection condition		Disconnect each device from harness and measure from connection side of harness connector.
	Requirements		There is continuity.
	Inspection result (Is the judging standard satisfied?)	YES	Go to step 16.
		NO	Modify harness.

Step 16	Inspection items		Inspection of harness between electronic control unit and cylinder recognition sensor (signal)
	Maintenance item		Check circuit between sensor connector terminal No. 1 and electronic control unit connector (GF35B) terminal No. 25
	Inspection condition		Disconnect each device from harness and measure from connection side of harness connector.
	Requirements		There is continuity.
	Inspection result (Is the judging standard satisfied?)	YES	Go to step 17.
		NO	Modify harness.

Step 17	Inspection items		Inspection by control data
	Maintenance item		**<General Scanning Tool used>** • Measure item “Ne”. **<Multi-Use Tester used>** • Measure item No. 01 “Engine Revolution” of Service Data.
	Inspection condition		–
	Requirements		Same indication as tachometer is given.
	Inspection result (Is the judging standard satisfied?)	YES	Go to transient fault (See Gr00.).
		NO	Replacement of electronic control unit

[Fault code]
Diagnosis code: P0069/Flash code: 32
[Monitor]
Characteristic abnormality of boost pressure sensor
[Fault (outline)]
Gain and offset drift
[Diagnosis check]
- Values of atmospheric pressure sensor and boost pressure sensor are compared

[Code generation condition]
- Atmospheric pressure value remains higher than boost pressure value by 18 kPa {2.6 psi, 0.2 kgf/cm^2} for 5 consecutive seconds.
  (Warning lamp is lit and diagnosis code is displayed on second establishment of code generation condition.)

[Diagnosis check timing]
- When code generation condition is established after starter switch ON

[Diagnostic requirement]
- Engine speed: less than 630 rpm
- Injection quantity: less than 20 mm^3/st
- Intake throttle opening: 95%
- Atmospheric pressure sensor: normal in output signal
- Boost pressure sensor: normal in output signal
- Intake throttle: nothing abnormal detected
- Battery voltage is normal.

[Control effected by electronic control unit during fault]
- Effects no special control.

[Probable cause of trouble]
- Open-circuit or short-circuit of harness between electronic control unit and boost pressure sensor
- Abnormality of each connector
- Abnormality of boost pressure sensor
- Abnormality of electronic control unit

[Recoverability]
<Control during fault>
- Recovered if signal becomes normal with starter switch in ON position.

<Warning lamp>
- Extinguished at 4th driving cycle after normal signal is input.

<Fault code>
- Automatically cleared at 40th warm up cycle after warning lamp is extinguished. (To clear as desired, erase from the memory.)

Driving cycle : “Starter switch ON to start engine till starter switch OFF” constitutes 1 driving cycle.
Warm up cycle : “Starter switch ON to start engine till starter switch OFF after coolant temperature increased and engine warmed up” constitutes 1 warm up cycle.

[Fault diagnosis]

- Perform checks in the sequence of the following steps.

Step 1	Inspection items		Inspection by control data
	Maintenance item		Check if following diagnosis codes occur simultaneously. • P0234 “Overboost” • P0236 “Boost Press SNSR (Plausi)” • P0237 “Boost Press SNSR (Low)” • P0238 “Boost Press SNSR (High)” • P2228 “Atm Press SNSR (Low)” • P2229 “Atm Press SNSR (High)”
	Inspection condition		• Starter switch: ON • Engine start: At idle
	Requirements		No codes occur.
	Inspection result (Is the judging standard satisfied?)	YES	Go to step 2.
		NO	Inspect diagnosis code that is occurring.

Step 2	Inspection items		Inspection by control data
	Maintenance item		**<General Scanning Tool used>** • Measure item “Intake MAP”. **<Multi-Use Tester used>** • Measure item No. 38 “Atmospheric Pressure” of Service Data.
	Inspection condition		Starter switch ON (engine stationary) → After engine has started, press accelerator pedal.
	Requirements		Coincides with atmospheric pressure → Gradually increases
	Inspection result (Is the judging standard satisfied?)	YES	Go to transient fault (See Gr00.).
		NO	Replacement of electronic control unit

[Fault code]
Diagnosis code: P0087/Flash code: 11
[Monitor]
Abnormality of common rail pressure (pressure: low)
[Fault (outline)]
Rail pressure regulator adjustment saturated
[Diagnosis check]
- Pressure in common rail is detected as actual common rail pressure by common rail pressure sensor and compared with target common rail pressure for control by engine electronic control unit.

[Code generation condition]
- Actual common rail pressure remains lower than target common rail pressure by –15 MPa {–2180 psi, –150 kgf/cm^2} or less for 10 seconds (not reaching the target pressure).
  (Warning lamp is lit and diagnosis code is displayed on first establishment of code generation condition.)

[Diagnosis check timing]
- When code generation condition is established after starter switch ON

[Diagnostic requirement]
- Injector control mode: injection command available (except in injection stop mode)
- Injection quantity required: more than 0 mm^3/st
- Supply pump control mode: Normal control is effected.

[Control effected by electronic control unit during fault]
- Effects no special control.

[Probable cause of trouble]
- Abnormality of supply pump (overflow valve)
- Abnormality of pressure limiter
- Airtight abnormality of injector
- Plugged fuel system
- Fuel leakage
- Abnormality of common rail pressure sensor

[Recoverability]
<Control during fault>
- Recovered if signal becomes normal with starter switch in ON position.

<Warning lamp>
- Extinguished at 4th driving cycle after normal signal is input.

<Fault code>
- Automatically cleared at 40th warm up cycle after warning lamp is extinguished. (To clear as desired, erase from the memory.)

Driving cycle : “Starter switch ON to start engine till starter switch OFF” constitutes 1 driving cycle.
Warm up cycle : “Starter switch ON to start engine till starter switch OFF after coolant temperature increased and engine warmed up” constitutes 1 warm up cycle.

[Fault diagnosis]

- Perform checks in the sequence of the following steps.

Step 1	Inspection items		Inspection by control data
	Maintenance item		Check if following diagnosis codes occur simultaneously. • P0093 “CRS (Fuel Leak)” • P0148 “CRS (Fuel Delivery)” • P0191 “CRS Pressure SNSR (Plausibility)” • P0192 “CRS Pressure SNSR (Low)” • P0193 “CRS Pressure SNSR (High)” • P0201 “Injector M/V-Cylinder 1 (Load)” • P0202 “Injector M/V-Cylinder 2 (Load)” • P0203 “Injector M/V-Cylinder 3 (Load)” • P0204 “Injector M/V-Cylinder 4 (Load)” • P0205 “Injector M/V-Cylinder 5 (Load)” • P0206 “Injector M/V-Cylinder 6 (Load)” • P0562 “Power Supply Voltage (Low)” • P0563 “Power Supply Voltage (High)” • P0604 “ECU Hardware (RAM)” • P0605 “ECU System (Hardware)” • P0606 “ECU Hardware (Main CPU)” • P0607 “ECU System” • P062F “ECU System (EEPROM)” • P2146 “Injector Bank 1 (Plausibility)” • P2147 “Injector Bank 1 (Low)” • P2148 “Injector Bank 1 (High)” • P2149 “Injector Bank 2 (Plausibility)” • P2150 “Injector Bank 2 (Low)” • P2151 “Injector Bank 2 (High)” • P2153 “Injector Bank 3 (Low)” • P2154 “Injector Bank 3 (High)”
	Inspection condition		• Starter switch: ON • Do not start engine.
	Requirements		No codes occur.
	Inspection result (Is the judging standard satisfied?)	YES	Go to step 2.
		NO	Inspect diagnosis code that is occurring.

Step 2	Inspection items		Checking of engine appearance
	Maintenance item		Check fuel system for fuel leak.
	Inspection condition		Starter switch: OFF
	Requirements		There is no fuel leak.
	Inspection result (Is the judging standard satisfied?)	YES	Go to step 3.
		NO	Go to step 6.

Step 3	Inspection items		Inspection of low pressure piping (fuel tank – supply pump)
	Maintenance item		Check suction pipe or hose for bend.
	Inspection condition		Starter switch: OFF
	Requirements		There is no bend on pipe or hose.
	Inspection result (Is the judging standard satisfied?)	YES	Go to step 4.
		NO	Correct and replace suction pipe or hose.

Step 4	Inspection items		Checking of air bleeding
	Maintenance item		Bleed air from fuel filter.
	Inspection condition		Starter switch: OFF
	Requirements		Problem is solved by bleeding air.
	Inspection result (Is the judging standard satisfied?)	YES	–
		NO	Go to step 5.

Step 5	Inspection items		Inspection of low pressure piping
	Maintenance item		Fuel filter
	Inspection condition		Starter switch: OFF
	Requirements		Problem is solved by replacing fuel filter.
	Inspection result (Is the judging standard satisfied?)	YES	–
		NO	Go to step 6.

Step 6	Inspection items		Inspection by control data
	Maintenance item		Perform actuator test item No. B9 “Fuel Leak Check”
	Inspection condition		Engine start: At idle
	Requirements		There is no leak from supply pump.
	Inspection result (Is the judging standard satisfied?)	YES	Go to step 7.
		NO	Replacement of supply pump

Step 7	Inspection items		Inspection by control data
	Maintenance item		Perform actuator test item No. B9 “Fuel Leak Check”
	Inspection condition		Engine start: At idle
	Requirements		There is no leak from fuel pipe between supply pump and rail.
	Inspection result (Is the judging standard satisfied?)	YES	Go to step 8.
		NO	Replacement of fuel pipe

Step 8	Inspection items		Inspection by control data
	Maintenance item		Perform actuator test item No. B9 “Fuel Leak Check”
	Inspection condition		Engine start: At idle
	Requirements		There is no leak from rail.
	Inspection result (Is the judging standard satisfied?)	YES	Go to step 9.
		NO	Replacement of rail

Step 9	Inspection items		Inspection by control data
	Maintenance item		Perform actuator test item No. B9 “Fuel Leak Check”
	Inspection condition		Engine start: At idle
	Requirements		There is no leak from fuel injection pipes (six) between injector and rail.
	Inspection result (Is the judging standard satisfied?)	YES	Go to step 10.
		NO	Replacement of injection pipe

Step 10	Inspection items		Inspection by control data
	Maintenance item		Perform actuator test item No. B9 “Fuel Leak Check”
	Inspection condition		Engine start: At idle
	Requirements		There is no leak from injectors (six).
	Inspection result (Is the judging standard satisfied?)	YES	Go to step 11.
		NO	Replacement of injector

Step 11	Inspection items		Check inside of combustion chamber.
	Maintenance item		Check for fuel leak.
	Inspection condition		• After performing actuator test item No. B9 “Fuel Leak Check”, stop engine. • Remove glow plug, and check from glow plug mounting hole using bore scope.
	Requirements		Inside of combustion chamber is not wet.
	Inspection result (Is the judging standard satisfied?)	YES	Go to step 12.
		NO	Replacement of injector of object cylinder

Step 12	Inspection items		Replacement of rail (common rail pressure sensor, flow damper and pressure limiter abnormal)
	Maintenance item		–
	Inspection condition		–
	Requirements		Problem is solved by replacing rail.
	Inspection result (Is the judging standard satisfied?)	YES	–
		NO	Go to step 13.

Step 13	Inspection items		Replacement of supply pump
	Maintenance item		–
	Inspection condition		–
	Requirements		Problem is solved by replacing supply pump.
	Inspection result (Is the judging standard satisfied?)	YES	–
		NO	Replacement of injectors (six)

[Fault code]
Diagnosis code: P0088/Flash code: 11
[Monitor]
Abnormality of common rail pressure (pressure: high)
[Fault (outline)]
Plausibility
[Diagnosis check]
- Pressure in common rail is detected as actual common rail pressure by common rail pressure sensor and compared with target common rail pressure for control by engine electronic control unit.

[Code generation condition]
- Actual common rail pressure remains higher than target common rail pressure by 15 MPa {2180 psi, 150 kgf/cm^2} or more for 10 seconds (considerably exceeding the target value).
  (Warning lamp is lit and diagnosis code is displayed on first establishment of code generation condition.)

[Diagnosis check timing]
- When code generation condition is established after starter switch ON

[Diagnostic requirement]
- Injector control mode: injection command available (except in injection stop mode)
- Injection quantity required: more than 0 mm^3/st
- Supply pump control mode: Normal control is effected.

[Control effected by electronic control unit during fault]
- Effects no special control.

[Probable cause of trouble]
- Abnormality of supply pump (overflow valve)
- Abnormality of pressure limiter
- Airtight abnormality of injector
- Plugged fuel system
- Fuel leakage
- Abnormality of common rail pressure sensor

[Recoverability]
<Control during fault>
- Recovered if signal becomes normal with starter switch in ON position.

<Warning lamp>
- Extinguished at 4th driving cycle after normal signal is input.

<Fault code>
- Automatically cleared at 40th warm up cycle after warning lamp is extinguished. (To clear as desired, erase from the memory.)

Driving cycle : “Starter switch ON to start engine till starter switch OFF” constitutes 1 driving cycle.
Warm up cycle : “Starter switch ON to start engine till starter switch OFF after coolant temperature increased and engine warmed up” constitutes 1 warm up cycle.

[Fault diagnosis]

- Perform checks in the sequence of the following step.

Step 1	Inspection items		Inspection by control data
	Maintenance item		Check if following diagnosis codes occur simultaneously. • P0093 “CRS (Fuel Leak)” • P0148 “CRS (Fuel Delivery)” • P0191 “CRS Pressure SNSR (Plausibility)” • P0192 “CRS Pressure SNSR (Low)” • P0193 “CRS Pressure SNSR (High)” • P0201 “Injector M/V-Cylinder 1 (Load)” • P0202 “Injector M/V-Cylinder 2 (Load)” • P0203 “Injector M/V-Cylinder 3 (Load)” • P0204 “Injector M/V-Cylinder 4 (Load)” • P0205 “Injector M/V-Cylinder 5 (Load)” • P0206 “Injector M/V-Cylinder 6 (Load)” • P0562 “Power Supply Voltage (Low)” • P0563 “Power Supply Voltage (High)” • P0604 “ECU Hardware (RAM)” • P0605 “ECU System (Hardware)” • P0606 “ECU Hardware (Main CPU)” • P0607 “ECU System” • P062F “ECU System (EEPROM)” • P2146 “Injector Bank 1 (Plausibility)” • P2147 “Injector Bank 1 (Low)” • P2148 “Injector Bank 1 (High)” • P2149 “Injector Bank 2 (Plausibility)” • P2150 “Injector Bank 2 (Low)” • P2151 “Injector Bank 2 (High)” • P2153 “Injector Bank 3 (Low)” • P2154 “Injector Bank 3 (High)”
	Inspection condition		• Starter switch: ON • Do not start engine.
	Requirements		No codes occur.
	Inspection result (Is the judging standard satisfied?)	YES	Replacement of supply pump
		NO	Inspect diagnosis code that is occurring.

[Fault code]
Diagnosis code: P0089/Flash code: 63
[Monitor]
Abnormality of SCV (suction control valve)
[Fault (outline)]
Overload (valve stuck)
[Diagnosis check]
- Required pump discharge and difference between actual rail pressure and target rail pressure are monitored for operating problem with SCV (suction control valve).

[Code generation condition]
- SCV (suction control valve) remains overloaded as so detected for 20 seconds.
  (Warning lamp is lit and diagnosis code is displayed on first establishment of code generation condition.)

[Diagnosis check timing]
- When code generation condition is established after starter switch ON

[Diagnostic requirement]
- Battery voltage: normal
- Supply pump learning: completed
- Injector control: normal (injection command available)
- Supply pump control: normal
- Injection quantity: 3 mm^3/st or more

[Control effected by electronic control unit during fault]
- Injection quantity is limited.
- Main injection only is allowed.
- Common rail pressure is limited.
- Exhaust gas recirculation control is stopped.
- Throttle control is stopped.
- Diesel particulate filter regeneration (manual or automatic) is stopped.
- Auto cruise control is stopped.
- ISS control is stopped.

[Probable cause of trouble]
- Open-circuit or short-circuit of harness between electronic control unit and SCV (suction control valve)
- Abnormality of each connector
- Abnormality of SCV (suction control valve)
- Abnormality of electronic control unit

[Recoverability]
<Control during fault>
- Recovered if signal becomes normal when starter switch is turned OFF to ON (power supply resumed to electronic control unit).

<Warning lamp>
- Extinguished after input of normal signal.

<Fault code>
- If code recovered to normal, automatically cleared at 40th warm up cycle after warning lamp is lit. (To clear as desired, erase from the memory.)

Warm up cycle : “Starter switch ON to start engine till starter switch OFF after coolant temperature increased and engine warmed up” constitutes 1 warm up cycle.

[Electronic Control Unit Connection Diagram]

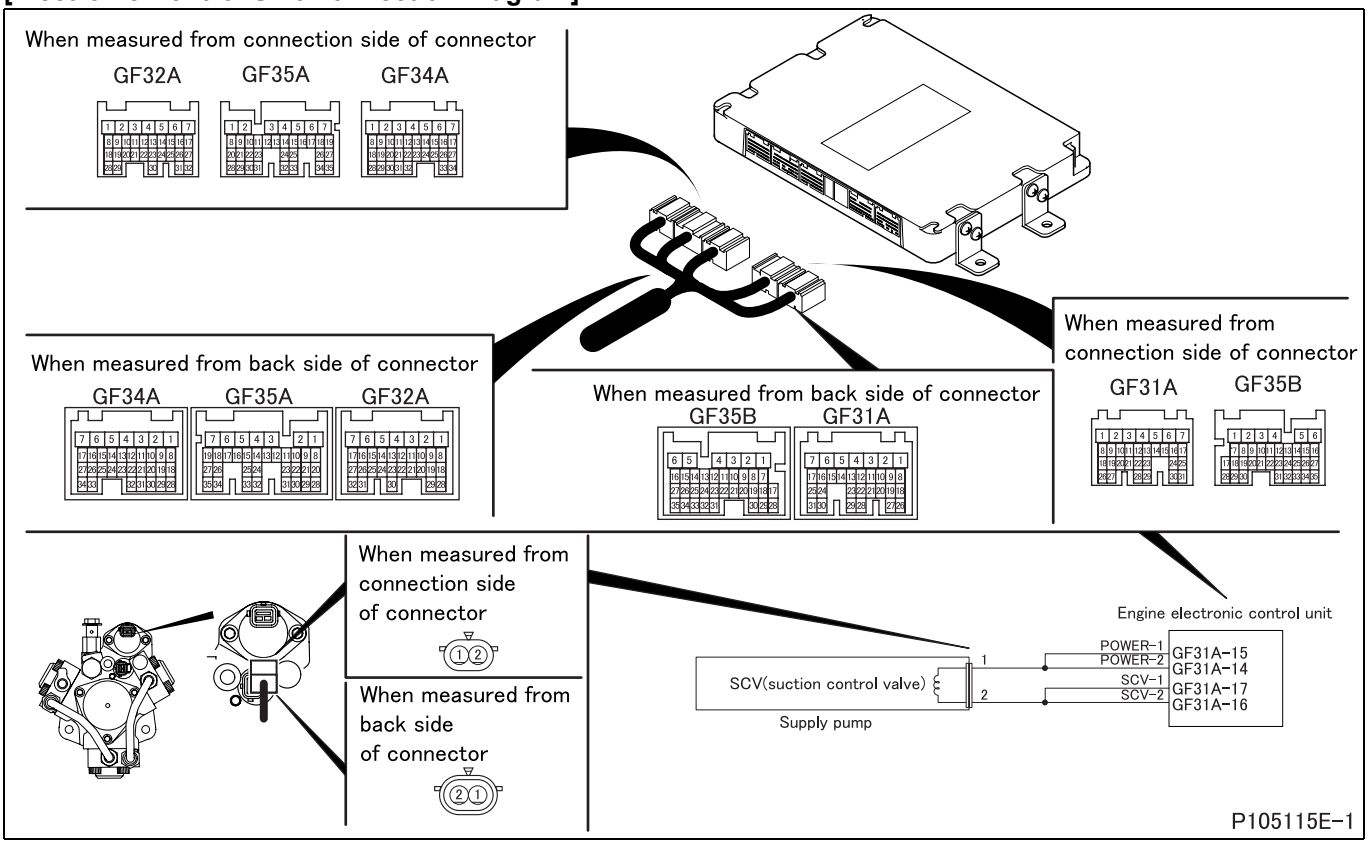

[Parts Identification and Location]

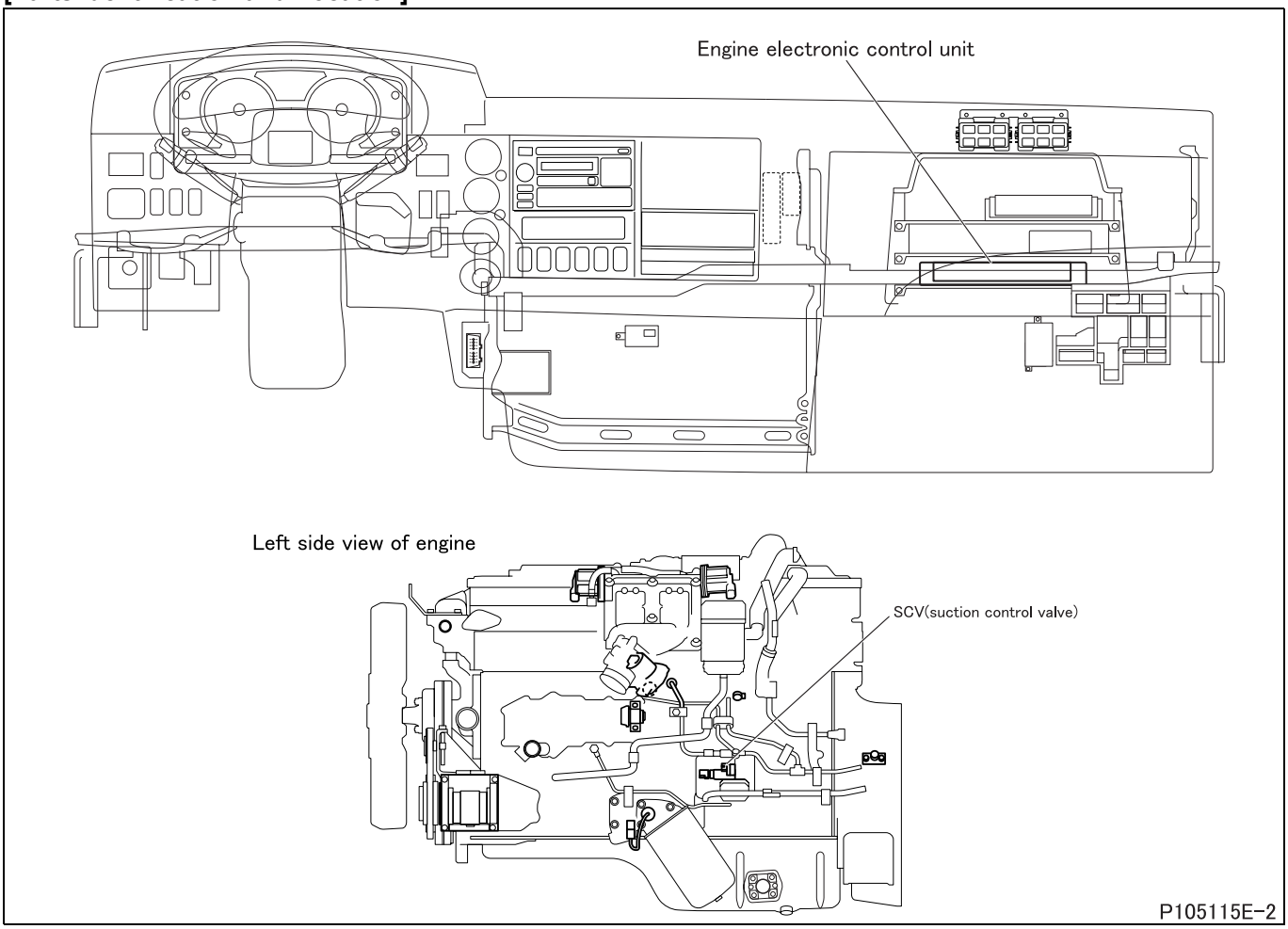

[Fault diagnosis]

- Perform checks in the sequence of the following steps.

Step 1	Inspection items		Inspection by electronic control unit connector
	Maintenance item		Measure value of resistance between connector (GF31A) terminal No. 14 or No. 15 and No. 16 or No. 17.
	Inspection condition		Disconnect electronic control unit and harness, and measure from connection side of harness connector.
	Requirements		2.1 ± 0.2 Ω
	Inspection result (Is the judging standard satisfied?)	YES	Go to step 2.
		NO	Go to step 3.

Step 2	Inspection items		Inspection of electronic control unit connector
	Maintenance item		Inspection of connector
	Inspection condition		–
	Requirements		• Connector is properly connected. • No trace of water entry is found. • No corrosion is found in terminal. • Connection to terminal is appropriate.
	Inspection result (Is the judging standard satisfied?)	YES	Go to step 7.
		NO	Modify connector.

Step 3	Inspection items		Inspection of SCV (suction control valve) connector
	Maintenance item		Inspection of connector
	Inspection condition		–
	Requirements		• Connector is properly connected. • No trace of water entry is found. • No corrosion is found in terminal. • Connection to terminal is appropriate.
	Inspection result (Is the judging standard satisfied?)	YES	Go to step 4.
		NO	Modify connector.

Step 4	Inspection items		Inspection of SCV (suction control valve) unit
	Maintenance item		Check continuity across SCV (suction control valve) connector terminal No. 1 and 2.
	Inspection condition		–
	Requirements		2.1 ± 0.2 Ω
	Inspection result (Is the judging standard satisfied?)	YES	Go to step 5.
		NO	Replacement of supply pump

<Step 4 inspection diagram>

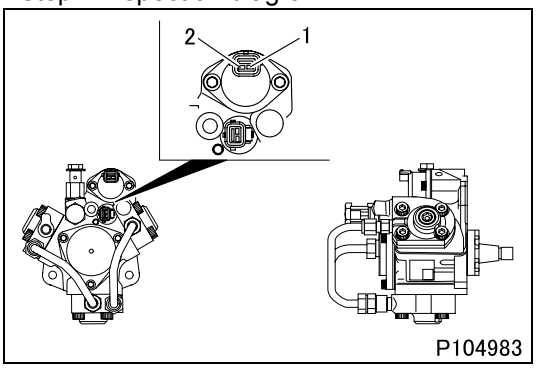

Step 5	Inspection items		Inspection of harness between electronic control unit and SCV (suction control valve) (power supply)
	Maintenance item		Check circuit between SCV (suction control valve) connector terminal No. 1 and electronic control unit connector (GF31A) terminal No. 14 or No. 15.
	Inspection condition		–
	Requirements		There is continuity.
	Inspection result (Is the judging standard satisfied?)	YES	Go to step 6.
		NO	Modify harness.

Step 6	Inspection items		Inspection of harness between electronic control unit and SCV (suction control valve) (ground)
	Maintenance item		Check circuit between SCV (suction control valve) connector terminal No. 2 and electronic control unit connector (GF31A) terminal No. 16 or No. 17.
	Inspection condition		–
	Requirements		There is continuity.
	Inspection result (Is the judging standard satisfied?)	YES	Go to step 7.
		NO	Modify harness.

Step 7	Inspection items		Inspection by control data
	Maintenance item		Perform actuator test item No. B9 “Fuel Leak Check” under the following conditions.
	Inspection condition		• Vehicle: stationary (vehicle speed 0 km/h {0 MPH}) • Transmission: neutral
	Requirements		This diagnosis code is not displayed again.
	Inspection result (Is the judging standard satisfied?)	YES	Go to transient fault (See Gr00.).
		NO	Replacement of electronic control unit

[Fault code]
Diagnosis code: P0091/Flash code: 63
[Monitor]
Abnormality of SCV (suction control valve)
[Fault (outline)]
- Short circuit ground (Circuit between suction control valve and electronic control unit is short-circuited to ground.)
- Open circuit (Circuit between suction control valve and electronic control unit is short-circuited to ground.)

[Diagnosis check]
- Engine electronic control unit internal function monitors SCV (suction control valve) for short-circuit to ground.

[Code generation condition]
- SCV (suction control valve) remains shorted to ground as detected for approx. 0.008 second.
  (Warning lamp is lit and diagnosis code is displayed on first establishment of code generation condition.)

[Diagnosis check timing]
- When code generation condition is established after starter switch ON

[Diagnostic requirement]
- Supply pump control: normal
- Battery voltage: normal
- Starter switch: ON

[Control effected by electronic control unit during fault]
- Injection quantity is limited.
- Main injection only is allowed.
- Common rail pressure is limited.
- Exhaust gas recirculation control is stopped.
- Throttle control is stopped.
- Diesel particulate filter regeneration (manual or automatic) is stopped.
- Auto cruise control is stopped.
- ISS control is stopped.

[Probable cause of trouble]
- Open-circuit or short-circuit of harness between electronic control unit and SCV (suction control valve)
- Abnormality of each connector
- Abnormality of SCV (suction control valve)
- Abnormality of electronic control unit

[Recoverability]
<Control during fault>
- Recovered if signal becomes normal when starter switch is turned OFF to ON (power supply resumed to electronic control unit).

<Warning lamp>
- Extinguished at 4th driving cycle after normal signal is input.

<Fault code>
- Automatically cleared at 40th warm up cycle after warning lamp is extinguished. (To clear as desired, erase from the memory.)

Driving cycle : “Starter switch ON to start engine till starter switch OFF” constitutes 1 driving cycle.
Warm up cycle : “Starter switch ON to start engine till starter switch OFF after coolant temperature increased and engine warmed up” constitutes 1 warm up cycle.

[Electronic Control Unit Connection Diagram]

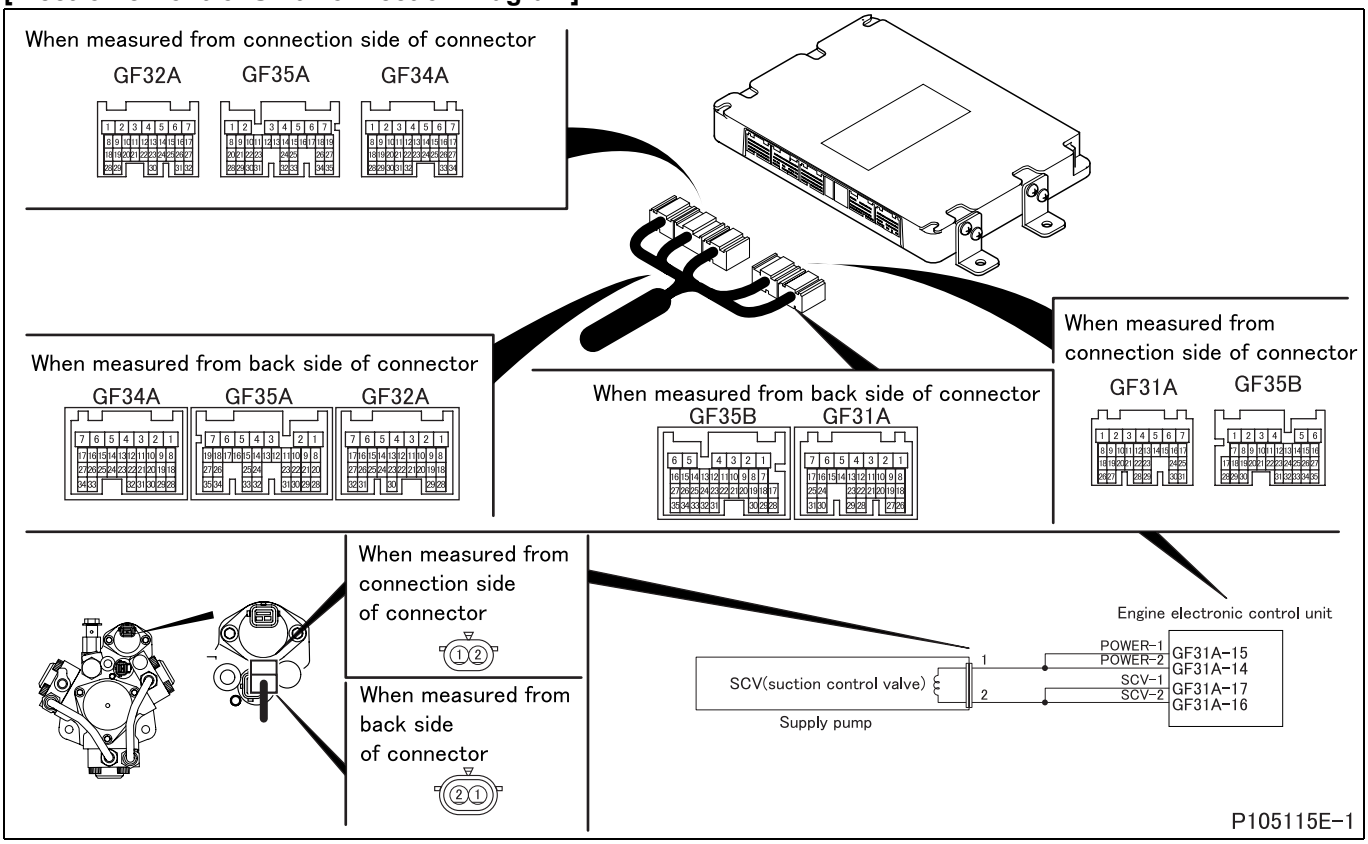

[Parts Identification and Location]

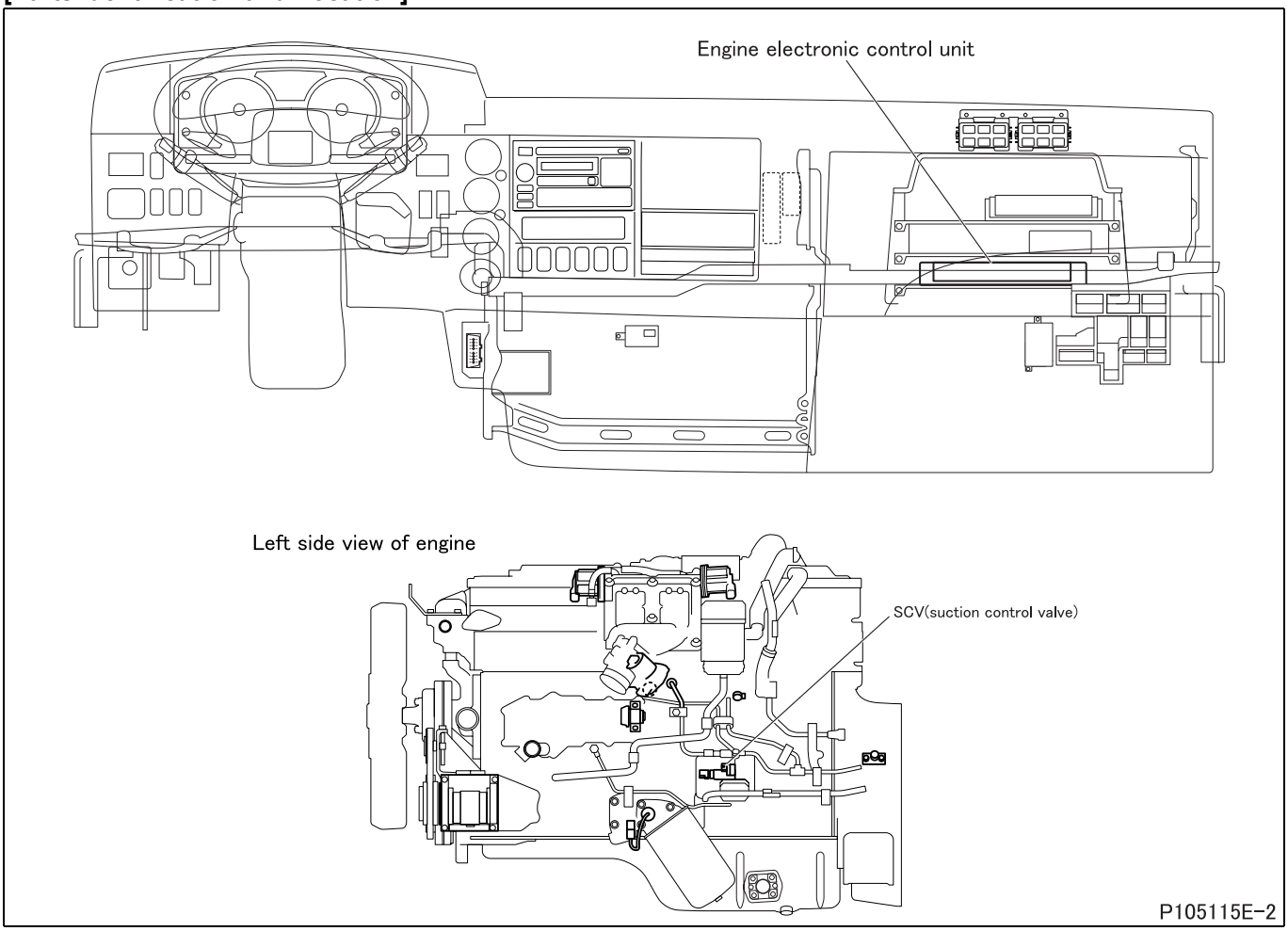

[Fault diagnosis]

- Perform checks in the sequence of the following steps.

Step 1	Inspection items		Inspection by electronic control unit connector
	Maintenance item		Measure value of resistance between connector (GF31A) terminal No. 14 or No. 15 and No. 16 or No. 17.
	Inspection condition		Disconnect electronic control unit and harness, and measure from connection side of harness connector.
	Requirements		2.1 ± 0.2 Ω
	Inspection result (Is the judging standard satisfied?)	YES	Go to step 2.
		NO	Go to step 3.

Step 2	Inspection items		Inspection of electronic control unit connector
	Maintenance item		Inspection of connector
	Inspection condition		–
	Requirements		• Connector is properly connected. • No trace of water entry is found. • No corrosion is found in terminal. • Connection to terminal is appropriate.
	Inspection result (Is the judging standard satisfied?)	YES	Go to step 7.
		NO	Modify connector.

Step 3	Inspection items		Inspection of SCV (suction control valve) connector
	Maintenance item		Inspection of connector
	Inspection condition		–
	Requirements		• Connector is properly connected. • No trace of water entry is found. • No corrosion is found in terminal. • Connection to terminal is appropriate.
	Inspection result (Is the judging standard satisfied?)	YES	Go to step 4.
		NO	Modify connector.

Step 4	Inspection items		Inspection of SCV (suction control valve) unit
	Maintenance item		Check continuity across SCV (suction control valve) connector terminal No. 1 and 2.
	Inspection condition		–
	Requirements		2.1 ± 0.2 Ω
	Inspection result (Is the judging standard satisfied?)	YES	Go to step 5.
		NO	Replacement of supply pump

<Step 4 inspection diagram>

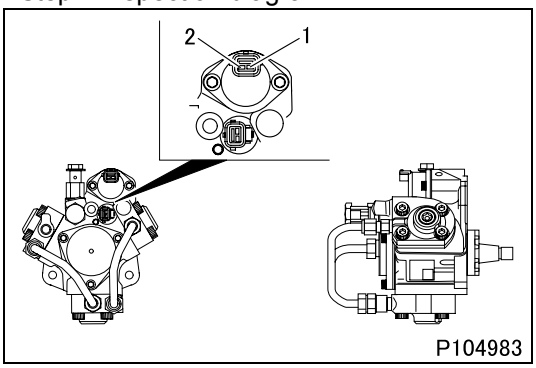

Step 5	Inspection items		Inspection of harness between electronic control unit and SCV (suction control valve) (power supply)
	Maintenance item		Check circuit between SCV (suction control valve) connector terminal No. 1 and electronic control unit connector (GF31A) terminal No. 14 or No. 15.
	Inspection condition		–
	Requirements		There is continuity.
	Inspection result (Is the judging standard satisfied?)	YES	Go to step 6.
		NO	Modify harness.

Step 6	Inspection items		Inspection of harness between electronic control unit and SCV (suction control valve) (ground)
	Maintenance item		Check circuit between SCV (suction control valve) connector terminal No. 2 and electronic control unit connector (GF31A) terminal No. 16 or No. 17.
	Inspection condition		–
	Requirements		There is continuity.
	Inspection result (Is the judging standard satisfied?)	YES	Go to step 7.
		NO	Modify harness.

Step 7	Inspection items		Inspection by control data
	Maintenance item		Perform actuator test item No. B9 “Fuel Leak Check” under the following conditions.
	Inspection condition		• Vehicle: stationary (vehicle speed 0 km/h {0 MPH}) • Transmission: neutral
	Requirements		This diagnosis code is not displayed again.
	Inspection result (Is the judging standard satisfied?)	YES	Go to transient fault (See Gr00.).
		NO	Replacement of electronic control unit

[Fault code]
Diagnosis code: P0092/Flash code: 63
[Monitor]
Abnormality of SCV (suction control valve)
[Fault (outline)]
Short circuit battery (Battery circuit shorted between suction control valve and electronic control unit)
[Diagnosis check]
- Engine electronic control unit internal function monitors SCV (suction control valve) for short-circuit to power supply.

[Code generation condition]
- SCV (suction control valve) remains shorted to power supply as detected for approx. 0.008 second. (Warning lamp is lit and diagnosis code is displayed on first establishment of code generation condition.)

[Diagnosis check timing]
- When code generation condition is established after starter switch ON

[Diagnostic requirement]
- Supply pump control: normal
- Battery voltage: normal
- Starter switch: ON

[Control effected by electronic control unit during fault]
- Injection quantity is limited.
- Main injection only is allowed.
- Common rail pressure is limited.
- Exhaust gas recirculation control is stopped.
- Throttle control is stopped.
- Diesel particulate filter regeneration (manual or automatic) is stopped.
- Auto cruise control is stopped.
- ISS control is stopped.

[Probable cause of trouble]
- Open-circuit or short-circuit of harness between electronic control unit and SCV (suction control valve)
- Abnormality of each connector
- Abnormality of SCV (suction control valve)
- Abnormality of electronic control unit

[Recoverability]
<Control during fault>
- Recovered if signal becomes normal when starter switch is turned OFF to ON (power supply resumed to electronic control unit).

<Warning lamp>
- Extinguished at 4th driving cycle after normal signal is input.

<Fault code>
- Automatically cleared at 40th warm up cycle after warning lamp is extinguished. (To clear as desired, erase from the memory.)

Driving cycle : “Starter switch ON to start engine till starter switch OFF” constitutes 1 driving cycle.
Warm up cycle : “Starter switch ON to start engine till starter switch OFF after coolant temperature increased and engine warmed up” constitutes 1 warm up cycle.

[Electronic Control Unit Connection Diagram]

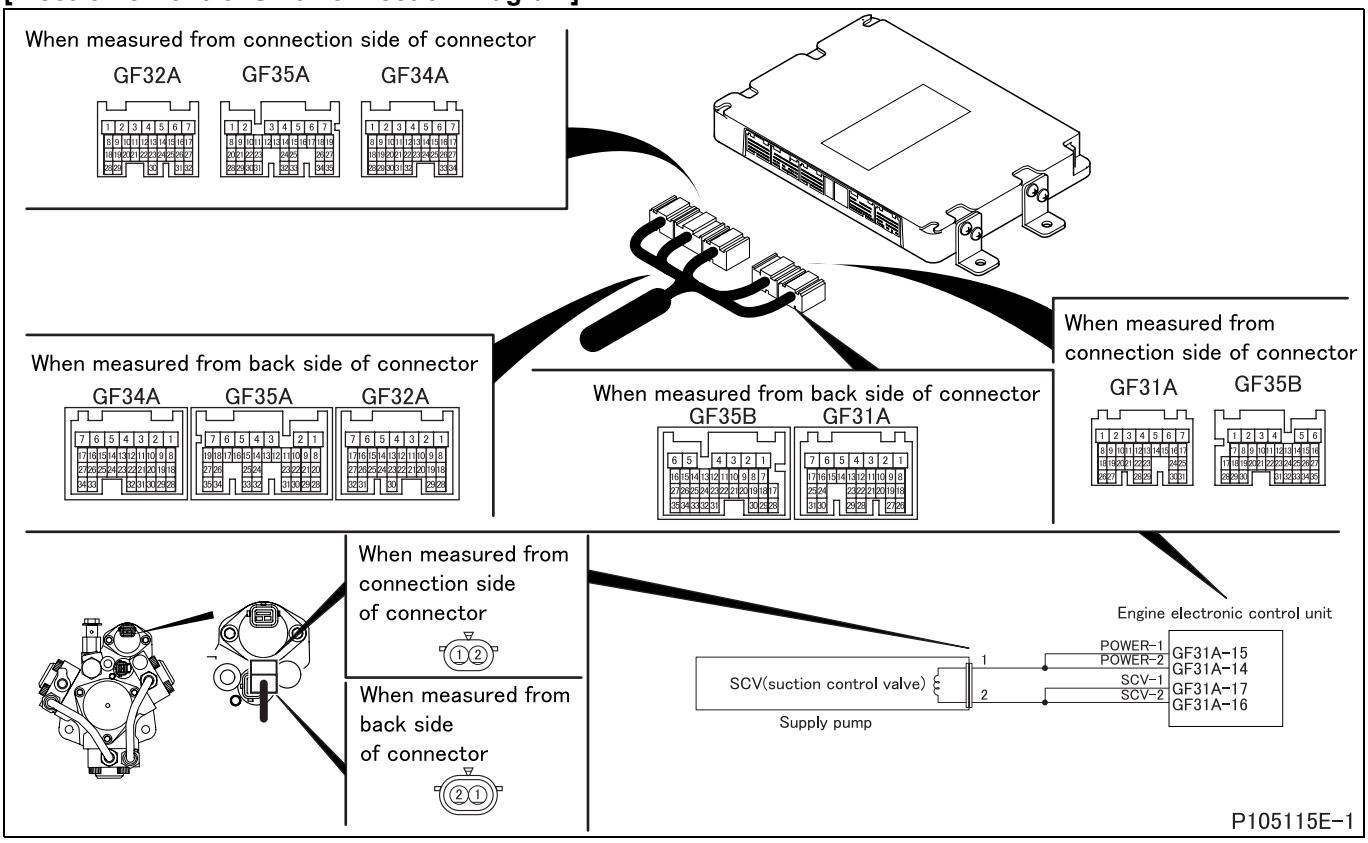

[Parts Identification and Location]

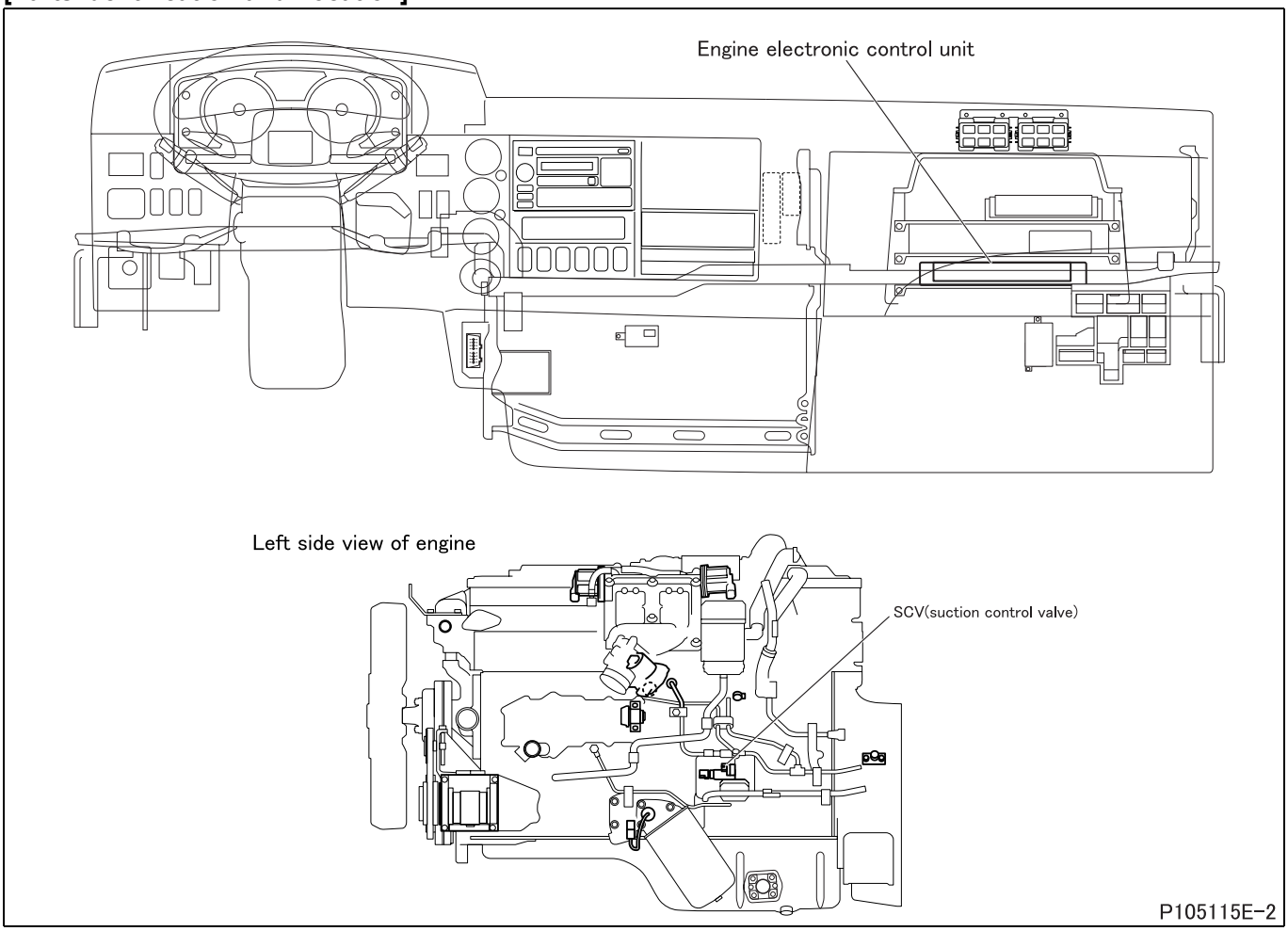

[Fault diagnosis]

- Perform checks in the sequence of the following steps.

Step 1	Inspection items		Inspection by electronic control unit connector
	Maintenance item		Measure value of resistance between connector (GF31A) terminal No. 14 or No. 15 and No. 16 or No. 17.
	Inspection condition		Disconnect electronic control unit and harness, and measure from connection side of harness connector.
	Requirements		2.1 ± 0.2 Ω
	Inspection result (Is the judging standard satisfied?)	YES	Go to step 2.
		NO	Go to step 3.

Step 2	Inspection items		Inspection of electronic control unit connector
	Maintenance item		Inspection of connector
	Inspection condition		–
	Requirements		• Connector is properly connected. • No trace of water entry is found. • No corrosion is found in terminal. • Connection to terminal is appropriate.
	Inspection result (Is the judging standard satisfied?)	YES	Go to step 7.
		NO	Modify connector.

Step 3	Inspection items		Inspection of SCV (suction control valve) connector
	Maintenance item		Inspection of connector
	Inspection condition		–
	Requirements		• Connector is properly connected. • No trace of water entry is found. • No corrosion is found in terminal. • Connection to terminal is appropriate.
	Inspection result (Is the judging standard satisfied?)	YES	Go to step 4.
		NO	Modify connector.

Step 4	Inspection items		Inspection of SCV (suction control valve) unit
	Maintenance item		Check continuity across SCV (suction control valve) connector terminal No. 1 and 2.
	Inspection condition		–
	Requirements		2.1 ± 0.2 Ω
	Inspection result (Is the judging standard satisfied?)	YES	Go to step 5.
		NO	Replacement of supply pump

<Step 4 inspection diagram>

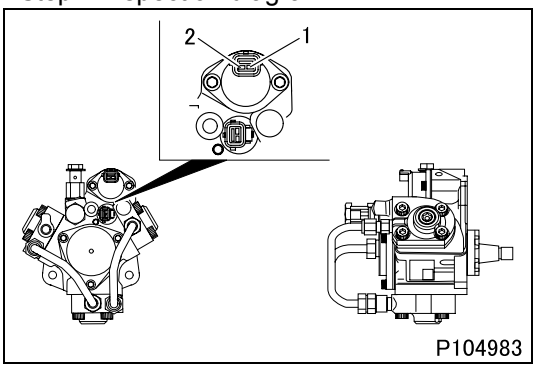

Step 5	Inspection items		Inspection of harness between electronic control unit and SCV (suction control valve) (power supply)
	Maintenance item		Check circuit between SCV (suction control valve) connector terminal No. 1 and electronic control unit connector (GF31A) terminal No. 14 or No. 15.
	Inspection condition		–
	Requirements		There is continuity.
	Inspection result (Is the judging standard satisfied?)	YES	Go to step 6.
		NO	Modify harness.

Step 6	Inspection items		Inspection of harness between electronic control unit and SCV (suction control valve) (ground)
	Maintenance item		Check circuit between SCV (suction control valve) connector terminal No. 2 and electronic control unit connector (GF31A) terminal No. 16 or No. 17.
	Inspection condition		–
	Requirements		There is continuity.
	Inspection result (Is the judging standard satisfied?)	YES	Go to step 7.
		NO	Modify harness.

Step 7	Inspection items		Inspection by control data
	Maintenance item		Perform actuator test item No. B9 “Fuel Leak Check” under the following conditions.
	Inspection condition		• Vehicle: stationary (vehicle speed 0 km/h {0 MPH}) • Transmission: neutral
	Requirements		This diagnosis code is not displayed again.
	Inspection result (Is the judging standard satisfied?)	YES	Go to transient fault (See Gr00.).
		NO	Replacement of electronic control unit

[Fault code]
Diagnosis code: P0093/Flash code: 36
[Monitor]
Abnormality of common rail pressure (fuel leakage)
[Fault (outline)]
Fuel leakage
[Diagnosis check]
- Common rail pressure is monitored for fuel leakage.

[Code generation condition]
- Fuel flow rates calculated from decrement of rail pressure and specified injection quantity are compared for fuel leakage. (Warning lamp is lit and diagnosis code is displayed on first establishment of code generation condition.)

[Diagnosis check timing]
- When code generation condition is established after starter switch ON

[Diagnostic requirement]
- Supply pump learning: completed
- Injector control: normal
- Common rail pressure sensor: normal
- Engine speed sensor: normal
- Engine speed: 500 rpm or more
- Supply pump control: normal

[Control effected by electronic control unit during fault]
- Injection quantity is limited.
- Exhaust gas recirculation control is stopped.
- Throttle control is stopped.
- Diesel particulate filter regeneration (manual or automatic) is stopped.

[Probable cause of trouble]
- Abnormality of supply pump
- Abnormality of pressure limiter
- Airtight abnormality of injector
- Plugged fuel system
- Fuel leakage
- Abnormality of common rail pressure sensor

[Recoverability]
<Control during fault>
- Recovered if signal becomes normal when starter switch is turned OFF to ON (power supply resumed to electronic control unit).

<Warning lamp>
- Extinguished after input of normal signal.

<Fault code>
- If code recovered to normal, automatically cleared at 40th warm up cycle after warning lamp is lit. (To clear as desired, erase from the memory.)

Warm up cycle : “Starter switch ON to start engine till starter switch OFF after coolant temperature increased and engine warmed up” constitutes 1 warm up cycle.

[Fault diagnosis]

- Perform checks in the sequence of the following steps.

Step 1	Inspection items		Inspection by control data
	Maintenance item		Check if following diagnosis codes occur simultaneously. • P0093 “CRS (Fuel Leak)” • P0148 “CRS (Fuel Delivery)” • P0191 “CRS Pressure SNSR (Plausibility)” • P0192 “CRS Pressure SNSR (Low)” • P0193 “CRS Pressure SNSR (High)” • P0201 “Injector M/V-Cylinder 1 (Load)” • P0202 “Injector M/V-Cylinder 2 (Load)” • P0203 “Injector M/V-Cylinder 3 (Load)” • P0204 “Injector M/V-Cylinder 4 (Load)” • P0205 “Injector M/V-Cylinder 5 (Load)” • P0206 “Injector M/V-Cylinder 6 (Load)” • P0562 “Power Supply Voltage (Low)” • P0563 “Power Supply Voltage (High)” • P0604 “ECU Hardware (RAM)” • P0605 “ECU System (Hardware)” • P0606 “ECU Hardware (Main CPU)” • P0607 “ECU System” • P062F “ECU System (EEPROM)” • P2146 “Injector Bank 1 (Plausibility)” • P2147 “Injector Bank 1 (Low)” • P2148 “Injector Bank 1 (High)” • P2149 “Injector Bank 2 (Plausibility)” • P2150 “Injector Bank 2 (Low)” • P2151 “Injector Bank 2 (High)” • P2153 “Injector Bank 3 (Low)” • P2154 “Injector Bank 3 (High)”
	Inspection condition		• Starter switch: ON • Do not start engine.
	Requirements		No codes occur.
	Inspection result (Is the judging standard satisfied?)	YES	Go to step 2.
		NO	Inspect diagnosis code that is occurring.

Step 2	Inspection items		Checking of engine appearance
	Maintenance item		Check fuel system for fuel leak.
	Inspection condition		Starter switch: OFF
	Requirements		There is no fuel leak.
	Inspection result (Is the judging standard satisfied?)	YES	Go to step 3.
		NO	Go to step 6.

Step 3	Inspection items		Inspection of low pressure piping (fuel tank – supply pump)
	Maintenance item		Check suction pipe or hose for bend.
	Inspection condition		Starter switch: OFF
	Requirements		There is no bend on pipe or hose.
	Inspection result (Is the judging standard satisfied?)	YES	Go to step 4.
		NO	Correct and replace suction pipe or hose.

Step 4	Inspection items		Checking of air bleeding
	Maintenance item		Bleed air from fuel filter.
	Inspection condition		Starter switch: OFF
	Requirements		Problem is solved by bleeding air.
	Inspection result (Is the judging standard satisfied?)	YES	–
		NO	Go to step 5.

Step 5	Inspection items		Inspection of low pressure piping
	Maintenance item		Fuel filter
	Inspection condition		Starter switch: OFF
	Requirements		Problem is solved by replacing fuel filter.
	Inspection result (Is the judging standard satisfied?)	YES	–
		NO	Go to step 6.

Step 6	Inspection items		Inspection by control data
	Maintenance item		Perform actuator test item No. B9 “Fuel Leak Check”
	Inspection condition		Engine start: At idle
	Requirements		There is no leak from supply pump.
	Inspection result (Is the judging standard satisfied?)	YES	Go to step 7.
		NO	Replacement of supply pump

Step 7	Inspection items		Inspection by control data
	Maintenance item		Perform actuator test item No. B9 “Fuel Leak Check”
	Inspection condition		Engine start: At idle
	Requirements		There is no leak from fuel pipe between supply pump and rail.
	Inspection result (Is the judging standard satisfied?)	YES	Go to step 8.
		NO	Replacement of fuel pipe

Step 8	Inspection items		Inspection by control data
	Maintenance item		Perform actuator test item No. B9 “Fuel Leak Check”
	Inspection condition		Engine start: At idle
	Requirements		There is no leak from rail.
	Inspection result (Is the judging standard satisfied?)	YES	Go to step 9.
		NO	Replacement of rail

Step 9	Inspection items		Inspection by control data
	Maintenance item		Perform actuator test item No. B9 “Fuel Leak Check”
	Inspection condition		Engine start: At idle
	Requirements		There is no leak from fuel injection pipes (six) between injector and rail.
	Inspection result (Is the judging standard satisfied?)	YES	Go to step 10.
		NO	Replacement of injection pipe

Step 10	Inspection items		Inspection by control data
	Maintenance item		Perform actuator test item No. B9 “Fuel Leak Check”
	Inspection condition		Engine start: At idle
	Requirements		There is no leak from injectors (six).
	Inspection result (Is the judging standard satisfied?)	YES	Go to step 11.
		NO	Replacement of injector

Step 11	Inspection items		Check inside of combustion chamber.
	Maintenance item		Check for fuel leak.
	Inspection condition		• After performing actuator test item No. B9 “Fuel Leak Check”, stop engine. • Remove glow plug, and check from glow plug mounting hole using bore scope.
	Requirements		Inside of combustion chamber is not wet.
	Inspection result (Is the judging standard satisfied?)	YES	Go to step 12.
		NO	Replacement of injector of object cylinder

Step 12	Inspection items		Replacement of rail (common rail pressure sensor, flow damper and pressure limiter abnormal)
	Maintenance item		–
	Inspection condition		–
	Requirements		Problem is solved by replacing rail.
	Inspection result (Is the judging standard satisfied?)	YES	–
		NO	Go to step 13.

Step 13	Inspection items		Replacement of supply pump
	Maintenance item		–
	Inspection condition		–
	Requirements		Problem is solved by replacing supply pump.
	Inspection result (Is the judging standard satisfied?)	YES	–
		NO	Replacement of injectors (six)

[Fault code]
Diagnosis code: P0097/Flash code: 09
[Monitor]
Abnormality of intake air temperature sensor 2
[Fault (outline)]
Low signal range check
[Diagnosis check]
- Output voltage of intake air temperature sensor 2 is monitored.

[Code generation condition]
- Voltage of intake air temperature sensor 2 remains below 0.1 V for approx. 2.5 seconds.
  (Warning lamp is lit and diagnosis code is displayed on first establishment of code generation condition.)

[Diagnosis check timing]
- When code generation condition is established after starter switch ON

[Diagnostic requirement]
- 2 seconds passed after starter switch ON
- 2 seconds passed after cranking
- Battery voltage: normal
- Engine speed: 2500 rpm or more
- Intake air temperature sensor 1: 0°C {32°F} or above

[Control effected by electronic control unit during fault]
- Injection quantity is limited.
- Exhaust gas recirculation control is stopped.
- Throttle control is stopped.
- Diesel particulate filter regeneration (manual or automatic) is stopped.
- Particulate matter (PM) deposit computation is stopped.
- Control is carried out using backup value (80°C {176°F}).

[Probable cause of trouble]
- Open-circuit or short-circuit of harness between electronic control unit and intake air temperature sensor 2
- Abnormality of each connector
- Abnormality of intake air temperature sensor 2
- Abnormality in electronic control unit

[Recoverability]
<Control during fault>
- Recovered if signal becomes normal with starter switch in ON position.

<Warning lamp>
- Extinguished at 4th driving cycle after normal signal is input.

<Fault code>
- Automatically cleared at 40th warm up cycle after warning lamp is extinguished. (To clear as desired, erase from the memory.)

Driving cycle : “Starter switch ON to start engine till starter switch OFF” constitutes 1 driving cycle.
Warm up cycle : “Starter switch ON to start engine till starter switch OFF after coolant temperature increased and engine warmed up” constitutes 1 warm up cycle.

[Electronic Control Unit Connection Diagram]

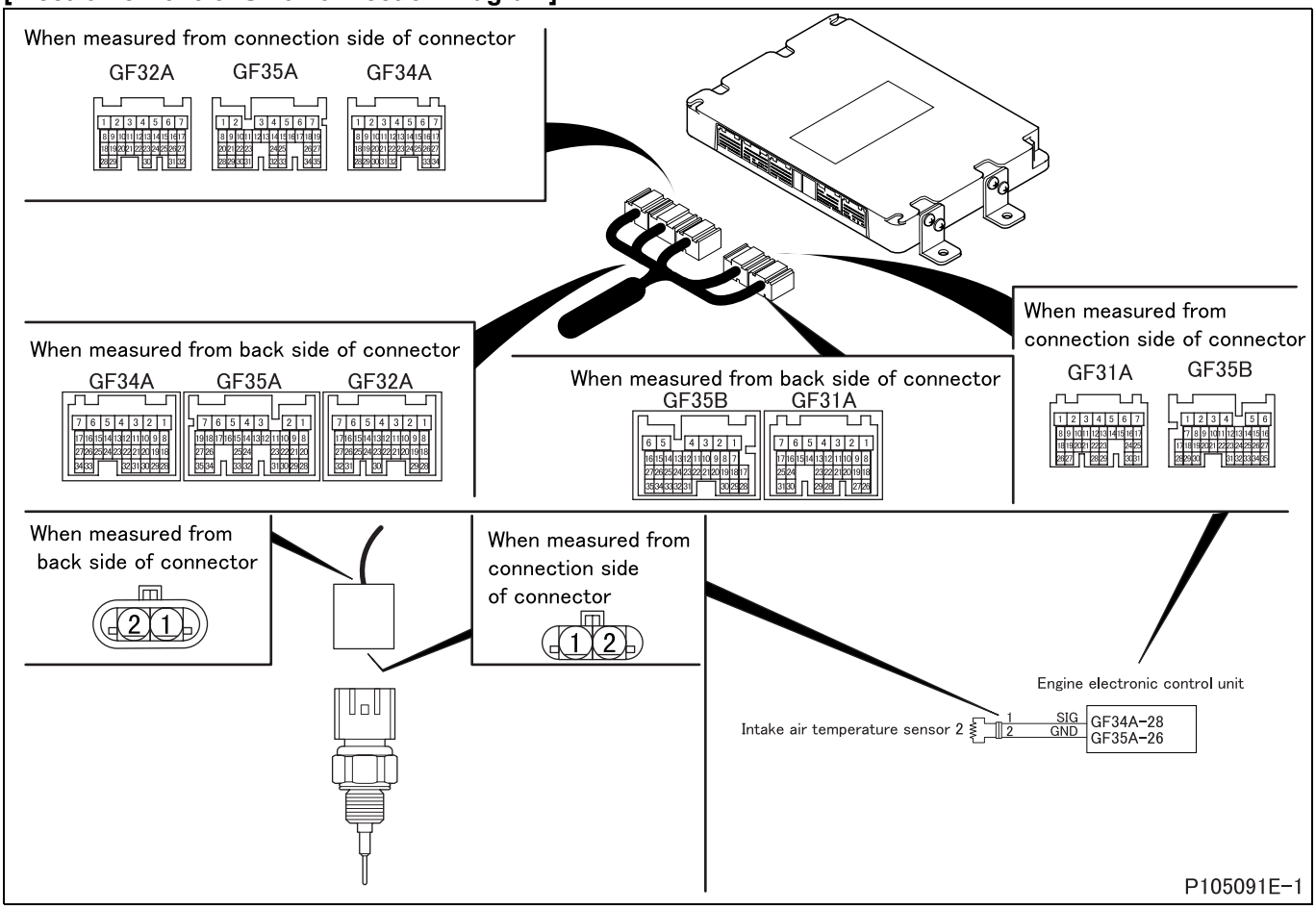

[Parts Identification and Location]

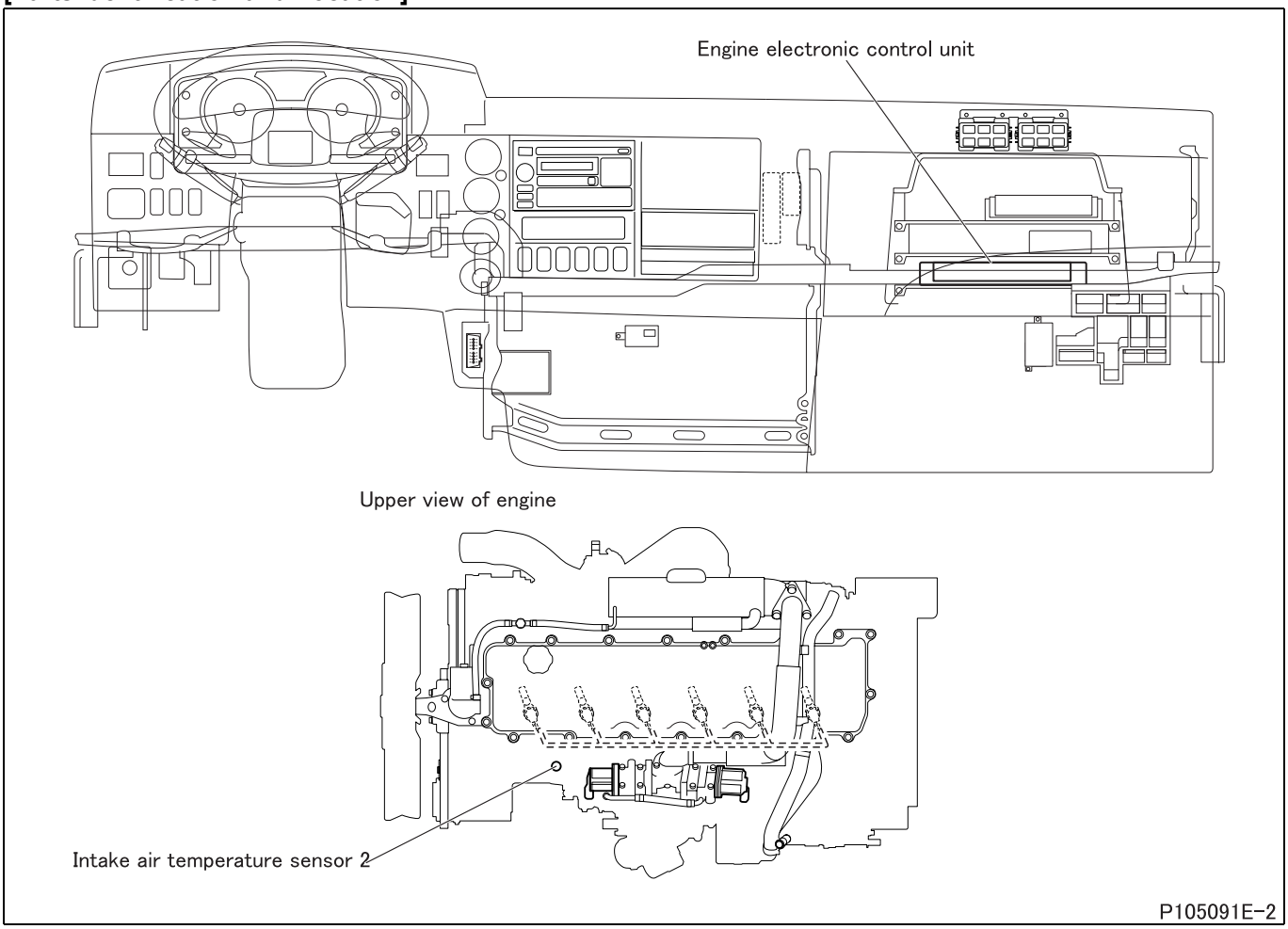

[Fault diagnosis]

- Perform checks in the sequence of the following steps.

Step 1	Inspection items		Inspection by control data
	Maintenance item		**<General Scanning Tool used>** • Measure item “Intake Air Temperature”. **<Multi-Use Tester used>** • Measure item No. 28 “Intake Air Temperature (EGR)” of Service Data.
	Inspection condition		–
	Requirements		When engine is cold: Temperature is equivalent to outside temperature.
	Inspection result (Is the judging standard satisfied?)	YES	Go to transient fault (See Gr00.).
		NO	Go to step 2.

Step 2	Inspection items		Inspection by electronic control unit connector
	Maintenance item		Measure value of resistance between connector (GF34A) terminal No. 26 and 28.
	Inspection condition		Disconnect electronic control unit from harness and measure from connection side of harness connector.
	Requirements		• 0°C {32°F}: 162.3 $^{+48.8}_{-36.5}$ kΩ • 20°C {68°F}: 61.47 $^{+15.99}_{-12.35}$ kΩ • 80°C {176°F}: 6.120 $^{+1.095}_{-0.907}$ kΩ
	Inspection result (Is the judging standard satisfied?)	YES	Go to step 3.
		NO	Go to step 4.

Step 3	Inspection items		Inspection of electronic control unit connector
	Maintenance item		Inspection of connector
	Inspection condition		–
	Requirements		• Connector is properly connected. • No trace of water entry is found. • No corrosion is found in terminal. • Connection to terminal is appropriate.
	Inspection result (Is the judging standard satisfied?)	YES	Go to step 8.
		NO	Modify connector.

Step 4	Inspection items		Inspection of intake air temperature sensor 2 connector
	Maintenance item		Inspection of connector
	Inspection condition		–
	Requirements		• Connector is properly connected. • No trace of water entry is found. • No corrosion is found in terminal. • Connection to terminal is appropriate.
	Inspection result (Is the judging standard satisfied?)	YES	Go to step 5.
		NO	Modify connector.

Step 5	Inspection items		Inspection of intake air temperature sensor 2 unit
	Maintenance item		Measure value of resistance between connector terminal No. 1 and 2.
	Inspection condition		• Put intake air temperature sensor 2 in vessel filled with engine oil. • Heat the oil to each of the specified temperatures. Stir the oil well while doing so.
	Requirements		• 0°C {32°F}: 162.3 $^{+48.8}_{-36.5}$ kΩ • 20°C {68°F}: 61.47 $^{+15.99}_{-12.35}$ kΩ • 80°C {176°F}: 6.120 $^{+1.095}_{-0.907}$ kΩ
	Inspection result (Is the judging standard satisfied?)	YES	Go to step 6.
		NO	Replacement of sensor

<Step 5 inspection diagram>

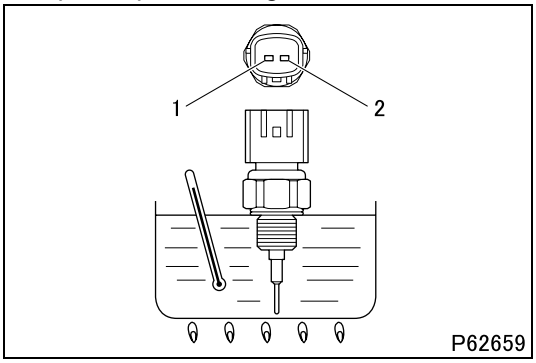

Step 6	Inspection items		Inspection of harness between electronic control unit and sensor (power supply)
	Maintenance item		Check circuit between sensor connector terminal No. 1 and electronic control unit connector (GF34A) terminal No. 28.
	Inspection condition		Disconnect each device from harness and measure from connection side of harness connector.
	Requirements		There is continuity.
	Inspection result (Is the judging standard satisfied?)	YES	Go to step 7.
		NO	Modify harness.

Step 7	Inspection items		Inspection of harness between electronic control unit and sensor (ground)
	Maintenance item		Check circuit between sensor connector terminal No. 2 and electronic control unit connector (GF35A) terminal No. 26.
	Inspection condition		Disconnect each device from harness and measure from connection side of harness connector.
	Requirements		There is continuity.
	Inspection result (Is the judging standard satisfied?)	YES	Go to step 8.
		NO	Modify harness.

Step 8	Inspection items		Inspection by control data
	Maintenance item		**<General Scanning Tool used>** • Measure item “Intake Air Temperature”. **<Multi-Use Tester used>** • Measure item No. 28 “Intake Air Temperature (EGR)” of Service Data.
	Inspection condition		–
	Requirements		When engine is cold: Temperature is equivalent to outside temperature.
	Inspection result (Is the judging standard satisfied?)	YES	Go to transient fault (See Gr00.).
		NO	Replacement of electronic control unit

[Fault code]
Diagnosis code: P0098/Flash code: 09
[Monitor]
Abnormality of intake air temperature sensor 2
[Fault (outline)]
High signal range check
[Diagnosis check]
- Output voltage of intake air temperature sensor 2 is monitored.

[Code generation condition]
- Voltage of intake air temperature sensor 2 remains over 4.9 V for approx. 2.5 seconds.
  (Warning lamp is lit and diagnosis code is displayed on first establishment of code generation condition.)

[Diagnosis check timing]
- When code generation condition is established after starter switch ON

[Diagnostic requirement]
- Engine speed: 500 rpm or more
- Intake air temperature 1: 0°C {32°F} or above
- Engine in operation
- 2 seconds passed after starter switch ON
- 2 seconds passed after cranking
- Battery voltage: normal

[Control effected by electronic control unit during fault]
- Injection quantity is limited.
- Exhaust gas recirculation control is stopped.
- Throttle control is stopped.
- Diesel particulate filter regeneration (manual or automatic) is stopped.
- Particulate matter (PM) deposit computation is stopped.
- Control is carried out using backup value (80°C {176°F}).

[Probable cause of trouble]
- Open-circuit or short-circuit of harness between electronic control unit and intake air temperature sensor 2
- Abnormality of each connector
- Abnormality of intake air temperature sensor 2
- Abnormality in electronic control unit

[Recoverability]
<Control during fault>
- Recovered if signal becomes normal with starter switch in ON position.

<Warning lamp>
- Extinguished at 4th driving cycle after normal signal is input.

<Fault code>
- Automatically cleared at 40th warm up cycle after warning lamp is extinguished. (To clear as desired, erase from the memory.)

Driving cycle : “Starter switch ON to start engine till starter switch OFF” constitutes 1 driving cycle.
Warm up cycle : “Starter switch ON to start engine till starter switch OFF after coolant temperature increased and engine warmed up” constitutes 1 warm up cycle.

[Electronic Control Unit Connection Diagram]

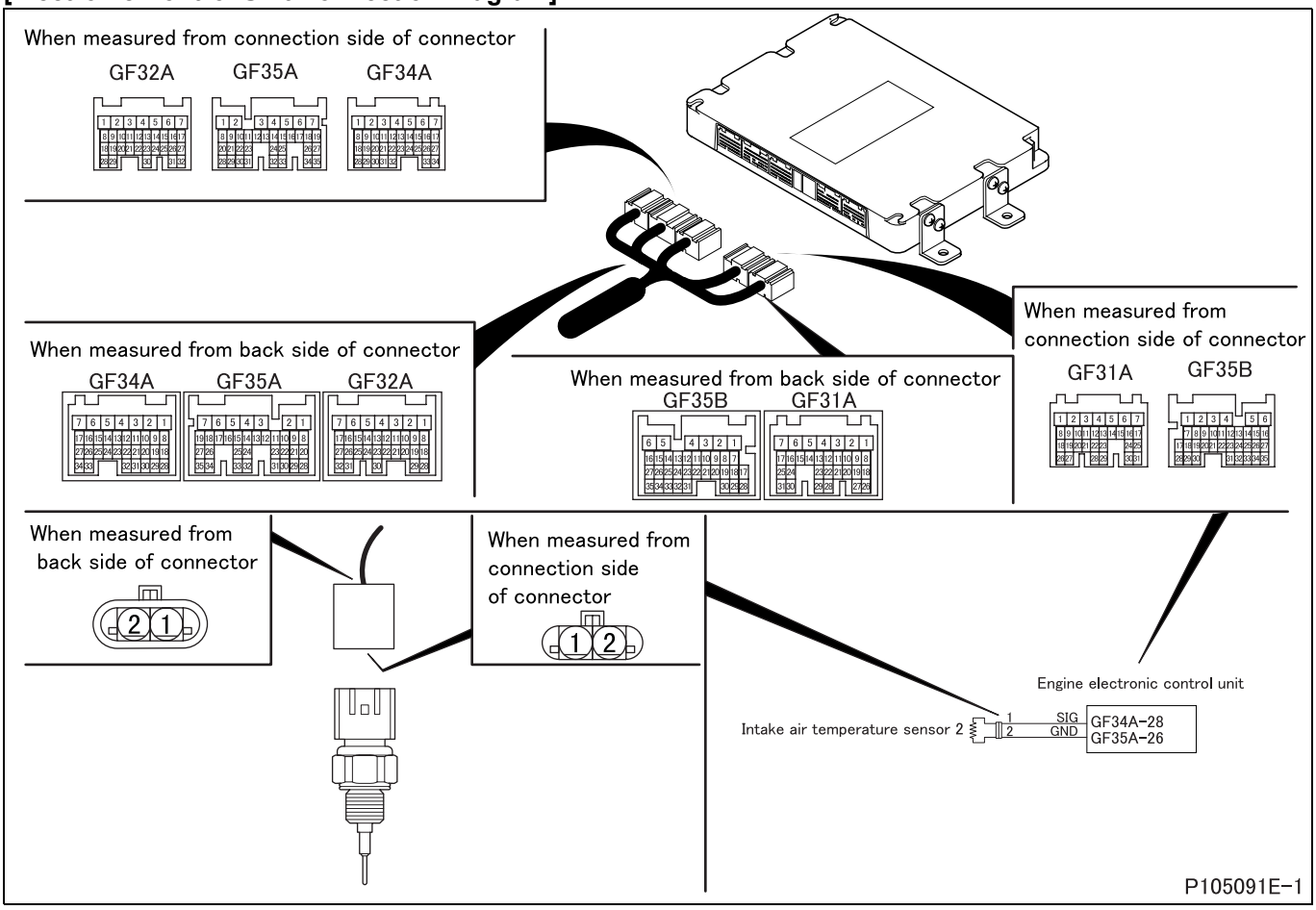

[Parts Identification and Location]

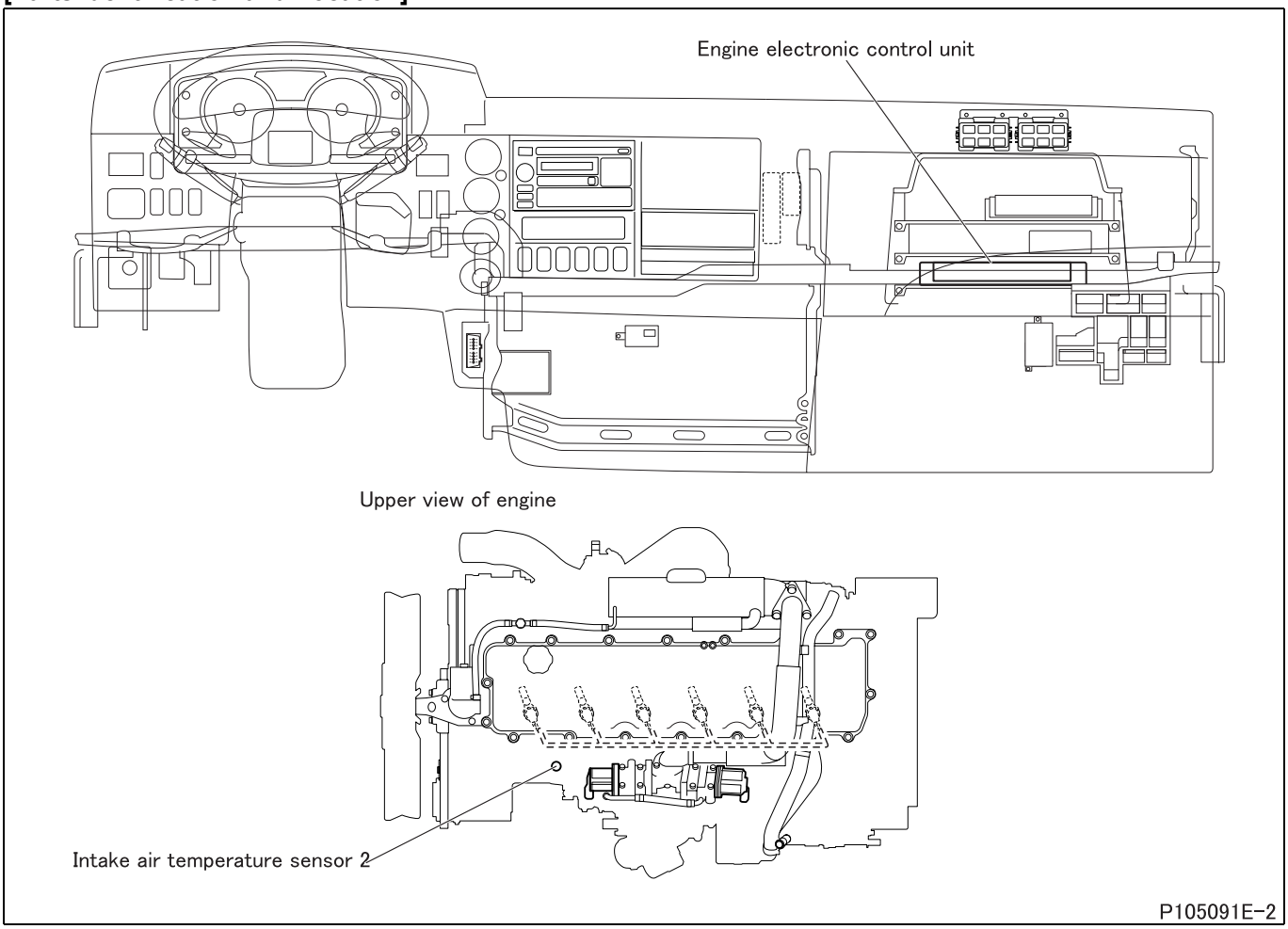

[Fault diagnosis]

- Perform checks in the sequence of the following steps.

Step 1	Inspection items		Inspection by control data
	Maintenance item		**<General Scanning Tool used>** • Measure item “Intake Air Temperature”. **<Multi-Use Tester used>** • Measure item No. 28 “Intake Air Temperature (EGR)” of Service Data.
	Inspection condition		–
	Requirements		When engine is cold: Temperature is equivalent to outside temperature.
	Inspection result (Is the judging standard satisfied?)	YES	Go to transient fault (See Gr00.).
		NO	Go to step 2.

Step 2	Inspection items		Inspection by electronic control unit connector
	Maintenance item		Measure value of resistance between connector (GF34A) terminal No. 26 and 28.
	Inspection condition		Disconnect electronic control unit from harness and measure from connection side of harness connector.
	Requirements		• 0°C {32°F}: 162.3 $^{+48.8}_{-36.5}$ kΩ • 20°C {68°F}: 61.47 $^{+15.99}_{-12.35}$ kΩ • 80°C {176°F}: 6.120 $^{+1.095}_{-0.907}$ kΩ
	Inspection result (Is the judging standard satisfied?)	YES	Go to step 3.
		NO	Go to step 4.

Step 3	Inspection items		Inspection of electronic control unit connector
	Maintenance item		Inspection of connector
	Inspection condition		–
	Requirements		• Connector is properly connected. • No trace of water entry is found. • No corrosion is found in terminal. • Connection to terminal is appropriate.
	Inspection result (Is the judging standard satisfied?)	YES	Go to step 8.
		NO	Modify connector.

Step 4	Inspection items		Inspection of intake air temperature sensor 2 connector
	Maintenance item		Inspection of connector
	Inspection condition		–
	Requirements		• Connector is properly connected. • No trace of water entry is found. • No corrosion is found in terminal. • Connection to terminal is appropriate.
	Inspection result (Is the judging standard satisfied?)	YES	Go to step 5.
		NO	Modify connector.

Step 5	Inspection items		Inspection of intake air temperature sensor 2 unit
	Maintenance item		Measure value of resistance between connector terminal No. 1 and 2.
	Inspection condition		• Put intake air temperature sensor 2 in vessel filled with engine oil. • Heat the oil to each of the specified temperatures. Stir the oil well while doing so.
	Requirements		• 0°C {32°F}: 162.3 $^{+48.8}_{-36.5}$ kΩ • 20°C {68°F}: 61.47 $^{+15.99}_{-12.35}$ kΩ • 80°C {176°F}: 6.120 $^{+1.095}_{-0.907}$ kΩ
	Inspection result (Is the judging standard satisfied?)	YES	Go to step 6.
		NO	Replacement of sensor

<Step 5 inspection diagram>

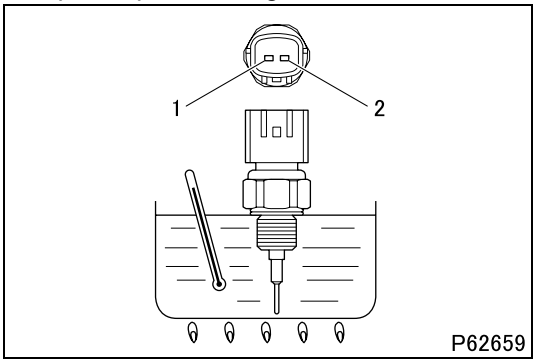

Step 6	Inspection items		Inspection of harness between electronic control unit and sensor (power supply)
	Maintenance item		Check circuit between sensor connector terminal No. 1 and electronic control unit connector (GF34A) terminal No. 28.
	Inspection condition		Disconnect each device from harness and measure from connection side of harness connector.
	Requirements		There is continuity.
	Inspection result (Is the judging standard satisfied?)	YES	Go to step 7.
		NO	Modify harness.

Step 7	Inspection items		Inspection of harness between electronic control unit and sensor (ground)
	Maintenance item		Check circuit between sensor connector terminal No. 2 and electronic control unit connector (GF35A) terminal No. 26.
	Inspection condition		Disconnect each device from harness and measure from connection side of harness connector.
	Requirements		There is continuity.
	Inspection result (Is the judging standard satisfied?)	YES	Go to step 8.
		NO	Modify harness.

Step 8	Inspection items		Inspection by control data
	Maintenance item		**<General Scanning Tool used>** • Measure item “Intake Air Temperature”. **<Multi-Use Tester used>** • Measure item No. 28 “Intake Air Temperature (EGR)” of Service Data.
	Inspection condition		–
	Requirements		When engine is cold: Temperature is equivalent to outside temperature.
	Inspection result (Is the judging standard satisfied?)	YES	Go to transient fault (See Gr00.).
		NO	Replacement of electronic control unit

[Fault code]
Diagnosis code: P0101/Flash code: 17
[Monitor]
Characteristic abnormality in air flow sensor
[Fault (outline)]
Gain and offset drift
[Diagnosis check]
- Air flow sensor output is checked to determine if it is within specified range under diagnosable conditions.

[Code generation condition]
- Air flow sensor output remains out of specified range for approx. 10 seconds.
  (Warning lamp is lit and diagnosis code is displayed on second establishment of code generation condition.)

[Diagnosis check timing]
- When code generation condition is established after starter switch ON

[Diagnostic requirement]
- Water temperature: 75°C {167°F} or above
- Intake air temperature 1: 30°C {86°F} or above
- Atmospheric pressure: between 85 kPa {12 psi} and 107 kPa {16 psi}
- Exhaust shutter: not controlled
- Actual intake throttle position: 95% or more (WOT)
- Air flow sensor: normal in output signal
- Intake air temperature sensor 1: normal in output signal
- Water temperature sensor: normal in output signal
- Atmospheric pressure sensor: normal in output signal
- Intake air temperature sensor 1: normal in output signal
- Boost pressure sensor: normal in output signal
- Intake throttle: normal
- Battery voltage: normal

[Control effected by electronic control unit during fault]
- Effects no special control.

[Probable cause of trouble]
- Open-circuit or short-circuit of harness between electronic control unit and air flow sensor
- Abnormality of each connector
- Abnormality of air flow sensor
- Abnormality in electronic control unit

[Recoverability]
<Control during fault>
- Recovered if signal becomes normal with starter switch in ON position.

<Warning lamp>
- Extinguished at 4th driving cycle after normal signal is input.

<Fault code>
- Automatically cleared at 40th warm up cycle after warning lamp is extinguished. (To clear as desired, erase from the memory.)

Driving cycle : “Starter switch ON to start engine till starter switch OFF” constitutes 1 driving cycle.
Warm up cycle : “Starter switch ON to start engine till starter switch OFF after coolant temperature increased and engine warmed up” constitutes 1 warm up cycle.

[Electronic Control Unit Connection Diagram]

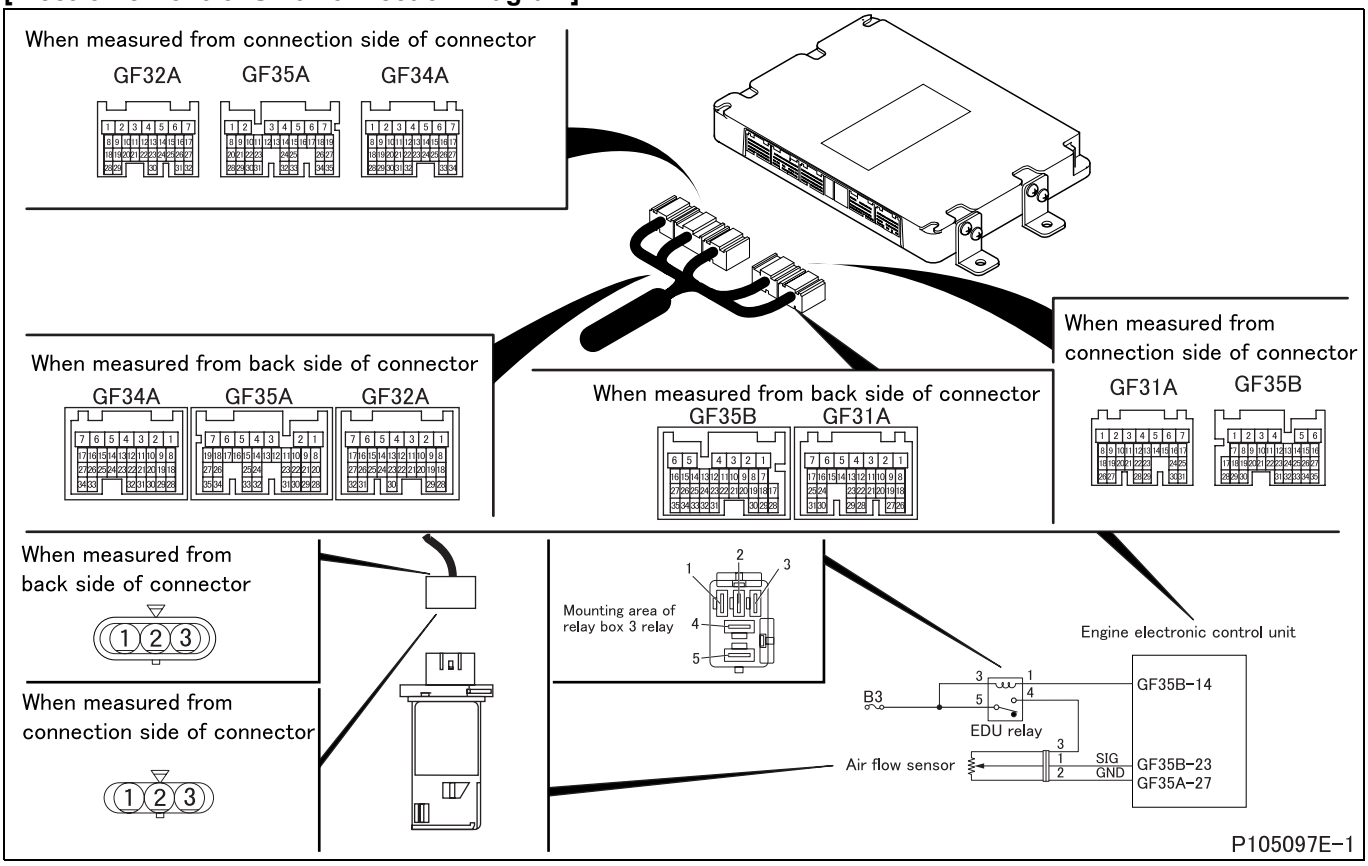

[Parts Identification and Location]

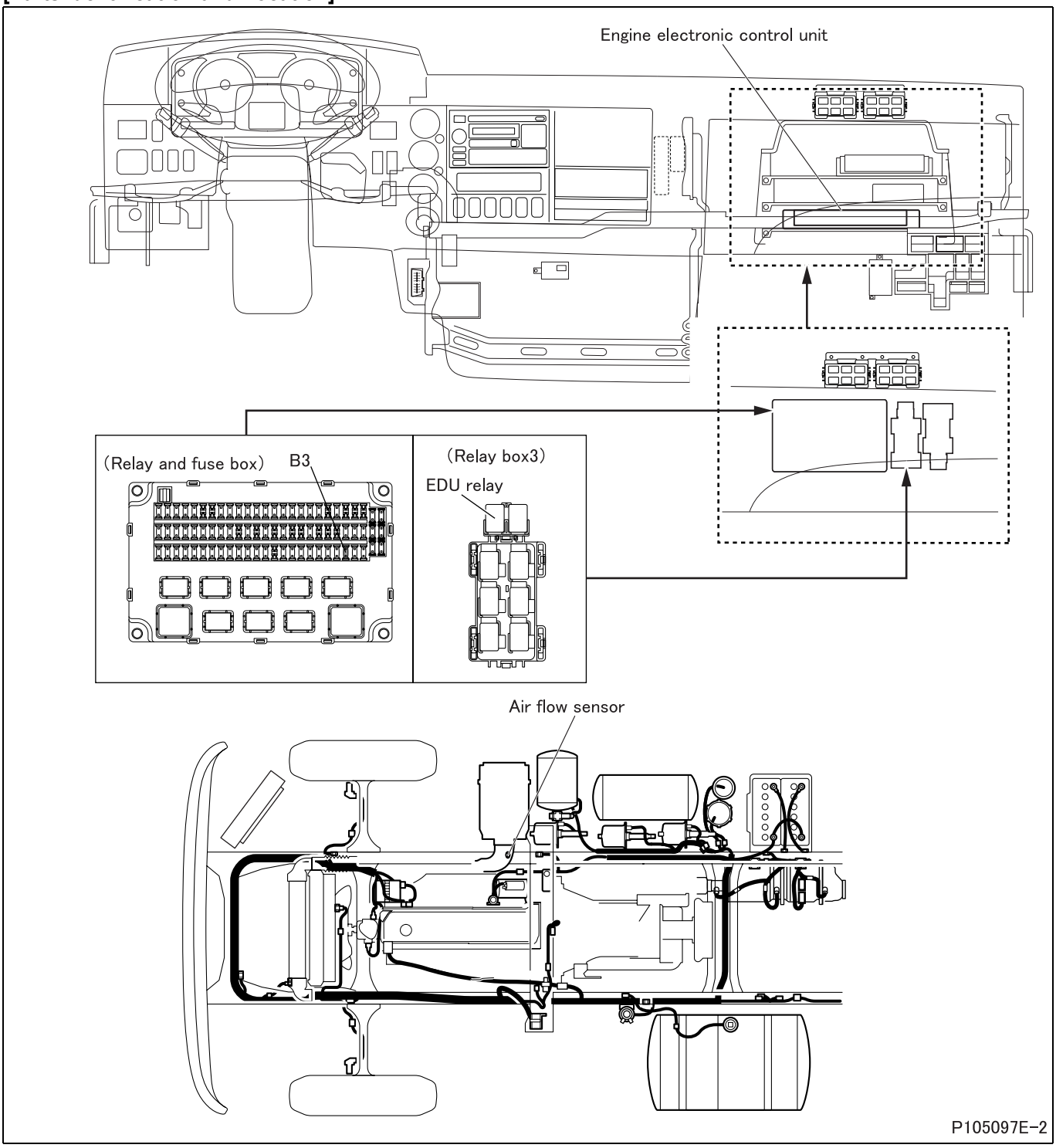

[Fault diagnosis]

- Perform checks in the sequence of the following steps.

Step 1	Inspection items		Inspection by control data
	Maintenance item		Measure item No. 3A “Air Flow Sensor Output” of Service Data.
	Inspection condition		• Perform actuator test item No. A9 “EDU Relay” • Gradually press accelerator pedal.
	Requirements		The numeric value should gradually increase.
	Inspection result (Is the judging standard satisfied?)	YES	Go to transient fault (See Gr00.).
		NO	Go to step 2.

Step 2	Inspection items		Inspection of sensor connector
	Maintenance item		Inspection of connector
	Inspection condition		–
	Requirements		• Connector is properly connected. • No trace of water entry is found. • No corrosion is found in terminal. • Connection to terminal is appropriate.
	Inspection result (Is the judging standard satisfied?)	YES	Go to step 3.
		NO	Modify connector.

Step 3	Inspection items		Inspection by sensor connector (power supply)
	Maintenance item		Measure value of voltage between connector terminal No. 3 (+) and 2 (–).
	Inspection condition		• Measure from back side of connector of harness with each device connected to harness. • Perform actuator test item No. A9 “EDU Relay”
	Requirements		12 V
	Inspection result (Is the judging standard satisfied?)	YES	Go to step 6.
		NO	Go to step 4.

Step 4	Inspection items		Inspection of harness between electronic drive unit relay and sensor (power supply)
	Maintenance item		Check circuit between electronic drive unit relay connector terminal No. 4 and sensor connector terminal No. 3.
	Inspection condition		Disconnect each device from harness and measure from connection side of harness connector.
	Requirements		There is continuity.
	Inspection result (Is the judging standard satisfied?)	YES	Go to step 5.
		NO	Modify harness.

Step 5	Inspection items		Inspection of harness between sensor and electronic control unit (ground)
	Maintenance item		Check circuit between sensor connector terminal No. 2 and electronic control unit connector (GF35A) terminal No. 27.
	Inspection condition		Disconnect each device from harness and measure from connection side of harness connector.
	Requirements		There is continuity.
	Inspection result (Is the judging standard satisfied?)	YES	Go to step 6.
		NO	Modify harness.

Step 6	Inspection items		Inspection of harness between sensor and electronic control unit (signal)
	Maintenance item		Check circuit between sensor connector terminal No. 1 and electronic control unit connector (GF35B) terminal No. 23.
	Inspection condition		Disconnect each device from harness and measure from connection side of harness connector.
	Requirements		There is continuity.
	Inspection result (Is the judging standard satisfied?)	YES	Go to step 7.
		NO	Modify harness.

Step 7	Inspection items		Inspection of sensor unit
	Maintenance item		Since inspection of single part is not easy, whether characteristics are deteriorated or not must be checked for the sensor mounted on the current vehicle by measuring and comparing the amount of sensor intake air of the sensor currently mounted on vehicle and that replaced with new one by the service data. **(1) Prepare for inspection** • Clean or replace air cleaner element. • Prepare a new air flow sensor. • Warm up the engine fully. **(2) Measure the intake air of current sensor** • Keep pressing the accelerator pedal until it bottom the stopper bolt from the idling state. (no load maximum rotation) • Measure the following items from among “Service data”. **<General Scanning Tool used>** • Engine speed: “Ne” (rpm) • Intake air flow rate: “Air Flow Rate from MAFS” (g/s) **<Multi-Use Tester used>** • Engine speed: 01 “Engine Revolution” (rpm) • Intake air flow rate: 3A “Air Flow Sensor Output” (g/hr) **(3) Measure the intake air of new sensor** • Replace the currently mounted sensor with a new sensor. • Keep pressing the accelerator pedal until it bottom the stopper bolt from the idling state. (no load maximum rotation) • Measure intake air flow at the same rpm as that of engine revolution in item (2) of “Service data”. **(4) Comparison whether characteristics are deteriorated** • Calculate the characteristics deterioration factor (%) by the following equation. • Characteristics deterioration factor (%) = (intake air of new item – current intake air) × 100/intake air of new item.
	Inspection condition		–
	Requirements		10% or less
	Inspection result (Is the judging standard satisfied?)	YES	Go to step 8.
		NO	Replacement of sensor

Step 8	Inspection items		Inspection by control data
	Maintenance item		Measure item No. 3A “Air Flow Sensor Output” of Service Data.
	Inspection condition		• Perform actuator test item No. A9 “EDU Relay” • Gradually press accelerator pedal.
	Requirements		The numeric value should gradually increase.
	Inspection result (Is the judging standard satisfied?)	YES	Go to transient fault (See Gr00.).
		NO	Replacement of electronic control unit

[Fault code]
Diagnosis code: P0102/Flash code: 17
[Monitor]
Abnormality of air flow sensor
[Fault (outline)]
Low signal range check
[Diagnosis check]
- Output voltage of air flow sensor is monitored.

[Code generation condition]
- Voltage of air flow sensor remains under 0.04 V for approx. 2.5 seconds.
  (Warning lamp is lit and diagnosis code is displayed on first establishment of code generation condition.)

[Diagnosis check timing]
- When code generation condition is established after starter switch ON

[Diagnostic requirement]
- 2 seconds passed after starter switch ON
- 2 seconds passed after cranking
- Battery voltage: normal

[Control effected by electronic control unit during fault]
- Injection quantity is limited.
- Exhaust gas recirculation control is stopped.
- Throttle control is stopped.
- Diesel particulate filter regeneration (manual or automatic) is stopped.
- Particulate matter (PM) deposit computation is stopped.

[Probable cause of trouble]
- Open-circuit or short-circuit of harness between electronic control unit and electronic drive unit relay
- Open-circuit or short-circuit of harness between electronic control unit and air flow sensor
- Open-circuit or short-circuit of harness between fuse and electronic drive unit relay
- Abnormality of each connector
- Abnormality of air flow sensor
- Abnormality of electronic drive unit relay
- Abnormality in electronic control unit

[Recoverability]
<Control during fault>
- Recovered if signal becomes normal with starter switch in ON position.

<Warning lamp>
- Extinguished at 4th driving cycle after normal signal is input.

<Fault code>
- Automatically cleared at 40th warm up cycle after warning lamp is extinguished. (To clear as desired, erase from the memory.)

Driving cycle : “Starter switch ON to start engine till starter switch OFF” constitutes 1 driving cycle.
Warm up cycle : “Starter switch ON to start engine till starter switch OFF after coolant temperature increased and engine warmed up” constitutes 1 warm up cycle.

[Electronic Control Unit Connection Diagram]

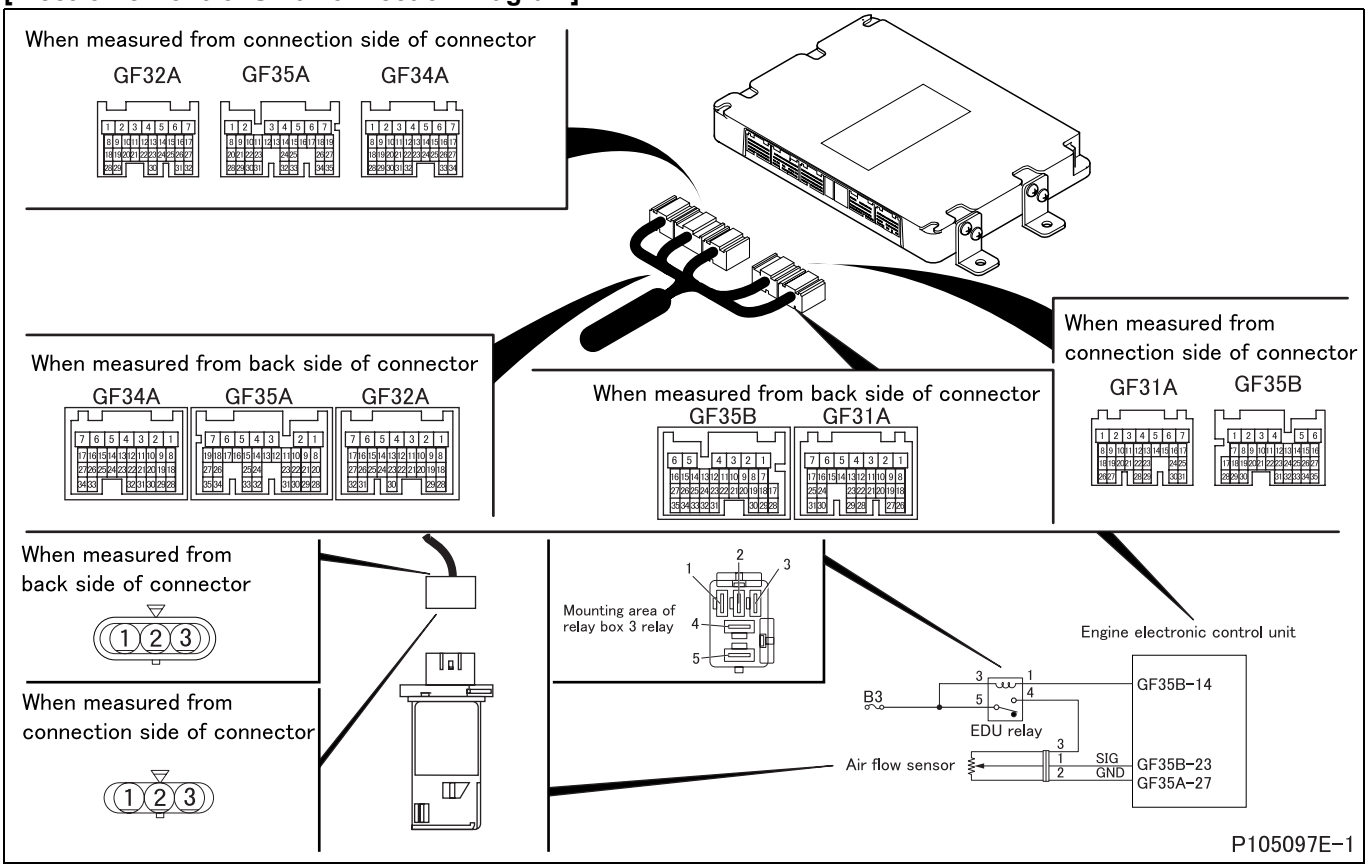

[Parts Identification and Location]

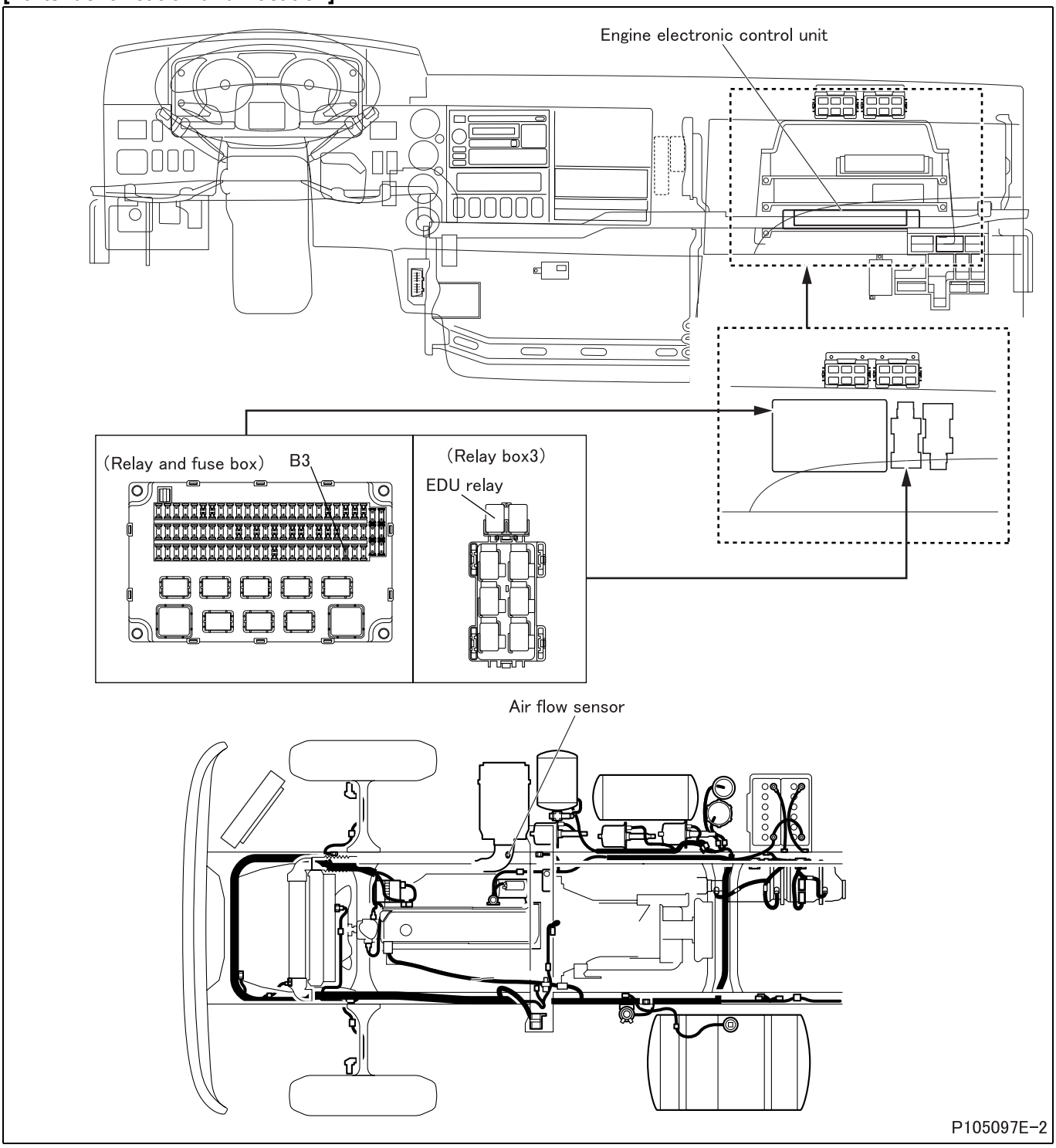

[Fault diagnosis]

- Perform checks in the sequence of the following steps.

Step 1	Inspection items		Inspection by control data
	Maintenance item		Measure item No. 3A “Air Flow Sensor Output” of Service Data.
	Inspection condition		• Perform actuator test item No. A9 “EDU Relay” • Gradually press accelerator pedal.
	Requirements		The numeric value should gradually increase.
	Inspection result (Is the judging standard satisfied?)	YES	Go to transient fault (See Gr00.).
		NO	Go to step 2.

Step 2	Inspection items		Inspection of sensor connector
	Maintenance item		Inspection of connector
	Inspection condition		–
	Requirements		• Connector is properly connected. • No trace of water entry is found. • No corrosion is found in terminal. • Connection to terminal is appropriate.
	Inspection result (Is the judging standard satisfied?)	YES	Go to step 3.
		NO	Modify connector.

Step 3	Inspection items		Inspection by sensor connector (power supply)
	Maintenance item		Measure value of voltage between connector terminal No. 3 (+) and 2 (–).
	Inspection condition		• Measure from back side of connector of harness with each device connected to harness. • Perform actuator test item No. A9 “EDU Relay”
	Requirements		12 V
	Inspection result (Is the judging standard satisfied?)	YES	Go to step 6.
		NO	Go to step 4.

Step 4	Inspection items		Inspection of harness between electronic drive unit relay and sensor (power supply)
	Maintenance item		Check circuit between electronic drive unit relay connector terminal No. 4 and sensor connector terminal No. 3.
	Inspection condition		Disconnect each device from harness and measure from connection side of harness connector.
	Requirements		There is continuity.
	Inspection result (Is the judging standard satisfied?)	YES	Go to step 5.
		NO	Modify harness.

Step 5	Inspection items		Inspection of harness between sensor and electronic control unit (ground)
	Maintenance item		Check circuit between sensor connector terminal No. 2 and electronic control unit connector (GF35A) terminal No. 27.
	Inspection condition		Disconnect each device from harness and measure from connection side of harness connector.
	Requirements		There is continuity.
	Inspection result (Is the judging standard satisfied?)	YES	Go to step 6.
		NO	Modify harness.

Step 6	Inspection items		Inspection of harness between sensor and electronic control unit (signal)
	Maintenance item		Check circuit between sensor connector terminal No. 1 and electronic control unit connector (GF35B) terminal No. 23.
	Inspection condition		Disconnect each device from harness and measure from connection side of harness connector.
	Requirements		There is continuity.
	Inspection result (Is the judging standard satisfied?)	YES	Go to step 7.
		NO	Modify harness.

Step 7	Inspection items		Inspection of sensor unit
	Maintenance item		Since inspection of single part is not easy, whether characteristics are deteriorated or not must be checked for the sensor mounted on the current vehicle by measuring and comparing the amount of sensor intake air of the sensor currently mounted on vehicle and that replaced with new one by the service data. **(1) Prepare for inspection** • Clean or replace air cleaner element. • Prepare a new air flow sensor. • Warm up the engine fully. **(2) Measure the intake air of current sensor** • Keep pressing the accelerator pedal until it bottom the stopper bolt from the idling state. (no load maximum rotation) • Measure the following items from among “Service data”. **<General Scanning Tool used>** • Engine speed: “Ne” (rpm) • Intake air flow rate: “Air Flow Rate from MAFS” (g/s) **<Multi-Use Tester used>** • Engine speed: 01 “Engine Revolution” (rpm) • Intake air flow rate: 3A “Air Flow Sensor Output” (g/hr) **(3) Measure the intake air of new sensor** • Replace the currently mounted sensor with a new sensor. • Keep pressing the accelerator pedal until it bottom the stopper bolt from the idling state. (no load maximum rotation) • Measure intake air flow at the same rpm as that of engine revolution in item (2) of “Service data”. **(4) Comparison whether characteristics are deteriorated** • Calculate the characteristics deterioration factor (%) by the following equation. • Characteristics deterioration factor (%) = (intake air of new item – current intake air) × 100/intake air of new item.
	Inspection condition		–
	Requirements		10% or less
	Inspection result (Is the judging standard satisfied?)	YES	Go to step 8.
		NO	Replacement of sensor

Step 8	Inspection items		Inspection by control data
	Maintenance item		Measure item No. 3A “Air Flow Sensor Output” of Service Data.
	Inspection condition		• Perform actuator test item No. A9 “EDU Relay” • Gradually press accelerator pedal.
	Requirements		The numeric value should gradually increase.
	Inspection result (Is the judging standard satisfied?)	YES	Go to transient fault (See Gr00.).
		NO	Replacement of electronic control unit

[Fault code]
Diagnosis code: P0103/Flash code: 17
[Monitor]
Abnormality of air flow sensor
[Fault (outline)]
High signal range check
[Diagnosis check]
- Output voltage of air flow sensor is monitored.

[Code generation condition]
- Voltage of air flow sensor remains over 4.8 V for approx. 2.5 seconds.
  (Warning lamp is lit and diagnosis code is displayed on first establishment of code generation condition.)

[Diagnosis check timing]
- When code generation condition is established after starter switch ON

[Diagnostic requirement]
- 2 seconds passed after starter switch ON
- 2 seconds passed after cranking
- Battery voltage: normal

[Control effected by electronic control unit during fault]
- Injection quantity is limited.
- Exhaust gas recirculation control is stopped.
- Throttle control is stopped.
- Diesel particulate filter regeneration (manual or automatic) is stopped.
- Particulate matter (PM) deposit computation is stopped.

[Probable cause of trouble]
- Open-circuit or short-circuit of harness between electronic control unit and electronic drive unit relay
- Open-circuit or short-circuit of harness between electronic control unit and air flow sensor
- Open-circuit or short-circuit of harness between fuse and electronic drive unit relay
- Abnormality of each connector
- Abnormality of air flow sensor
- Abnormality of electronic drive unit relay
- Abnormality in electronic control unit

[Recoverability]
<Control during fault>
- Recovered if signal becomes normal with starter switch in ON position.

<Warning lamp>
- Extinguished at 4th driving cycle after normal signal is input.

<Fault code>
- Automatically cleared at 40th warm up cycle after warning lamp is extinguished. (To clear as desired, erase from the memory.)

Driving cycle : “Starter switch ON to start engine till starter switch OFF” constitutes 1 driving cycle.
Warm up cycle : “Starter switch ON to start engine till starter switch OFF after coolant temperature increased and engine warmed up” constitutes 1 warm up cycle.

[Electronic Control Unit Connection Diagram]

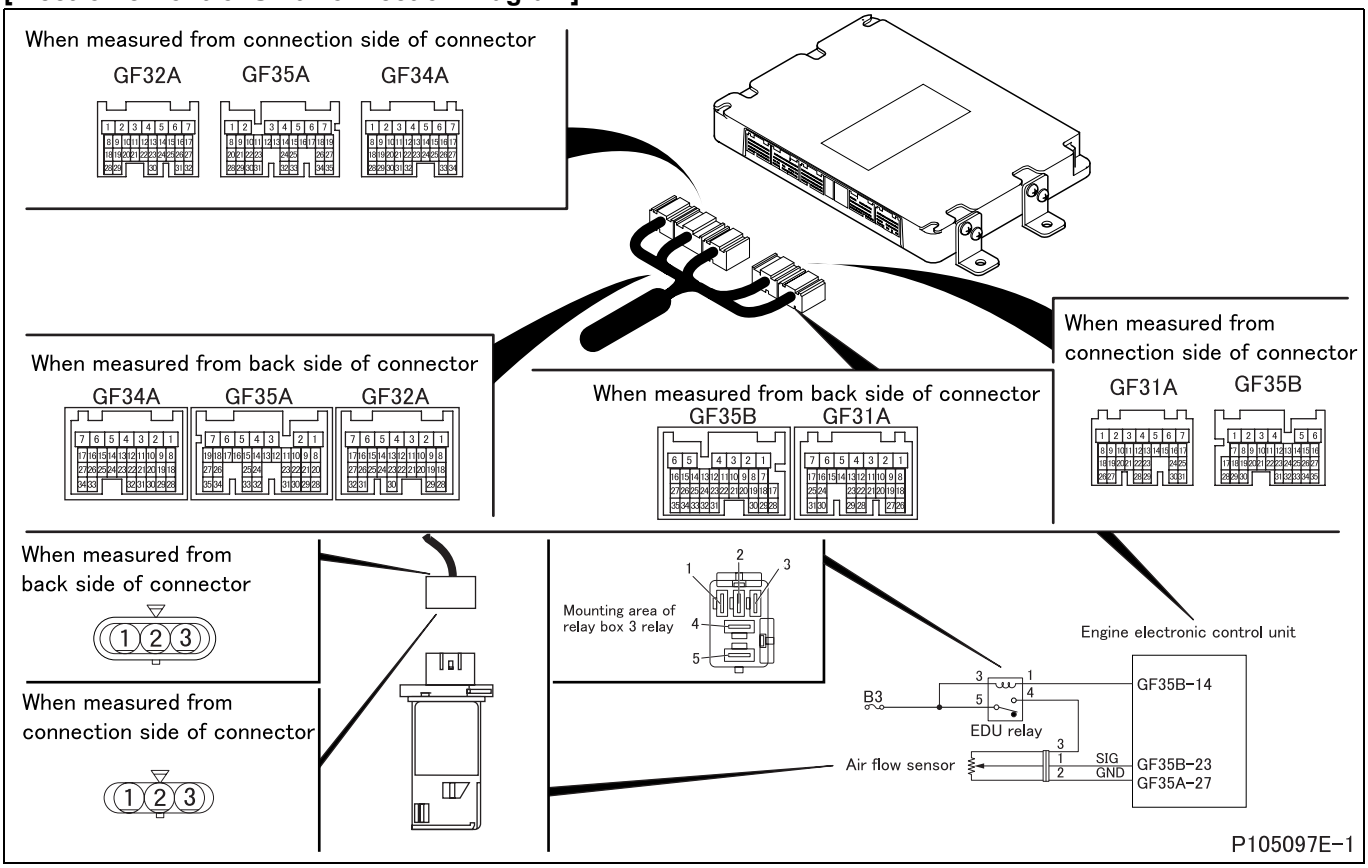

[Parts Identification and Location]

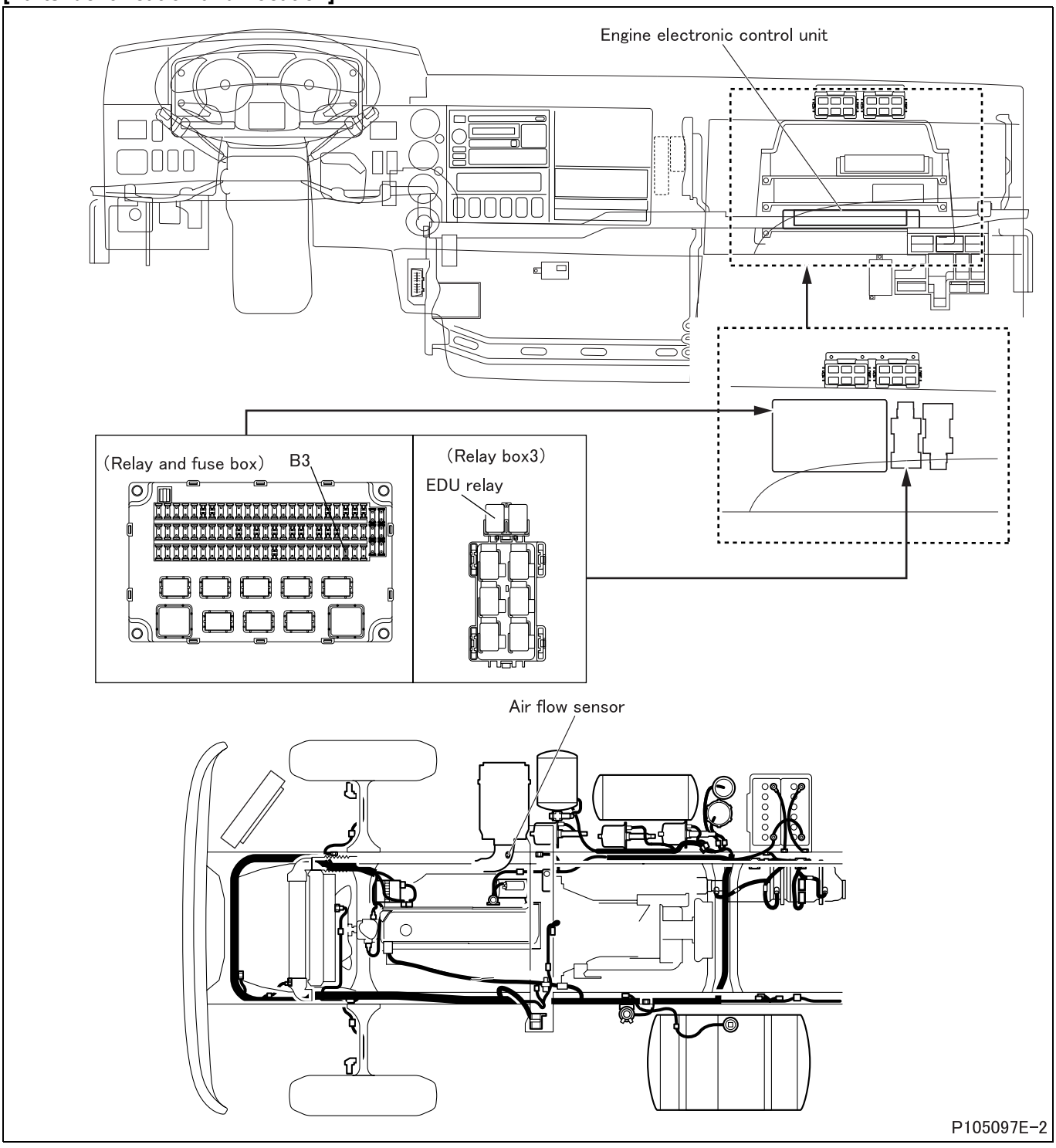

[Fault diagnosis]

- Perform checks in the sequence of the following steps.

Step 1	Inspection items		Inspection by control data
	Maintenance item		Measure item No. 3A “Air Flow Sensor Output” of Service Data.
	Inspection condition		• Perform actuator test item No. A9 “EDU Relay” • Gradually press accelerator pedal.
	Requirements		The numeric value should gradually increase.
	Inspection result (Is the judging standard satisfied?)	YES	Go to transient fault (See Gr00.).
		NO	Go to step 2.

Step 2	Inspection items		Inspection of sensor connector
	Maintenance item		Inspection of connector
	Inspection condition		–
	Requirements		• Connector is properly connected. • No trace of water entry is found. • No corrosion is found in terminal. • Connection to terminal is appropriate.
	Inspection result (Is the judging standard satisfied?)	YES	Go to step 3.
		NO	Modify connector.

Step 3	Inspection items		Inspection by sensor connector (power supply)
	Maintenance item		Measure value of voltage between connector terminal No. 3 (+) and 2 (–).
	Inspection condition		• Measure from back side of connector of harness with each device connected to harness. • Perform actuator test item No. A9 “EDU Relay”
	Requirements		12 V
	Inspection result (Is the judging standard satisfied?)	YES	Go to step 6.
		NO	Go to step 4.

Step 4	Inspection items		Inspection of harness between electronic drive unit relay and sensor (power supply)
	Maintenance item		Check circuit between electronic drive unit relay connector terminal No. 4 and sensor connector terminal No. 3.
	Inspection condition		Disconnect each device from harness and measure from connection side of harness connector.
	Requirements		There is continuity.
	Inspection result (Is the judging standard satisfied?)	YES	Go to step 5.
		NO	Modify harness.

Step 5	Inspection items		Inspection of harness between sensor and electronic control unit (ground)
	Maintenance item		Check circuit between sensor connector terminal No. 2 and electronic control unit connector (GF35A) terminal No. 27.
	Inspection condition		Disconnect each device from harness and measure from connection side of harness connector.
	Requirements		There is continuity.
	Inspection result (Is the judging standard satisfied?)	YES	Go to step 6.
		NO	Modify harness.

Step 6	Inspection items		Inspection of harness between sensor and electronic control unit (signal)
	Maintenance item		Check circuit between sensor connector terminal No. 1 and electronic control unit connector (GF35B) terminal No. 23.
	Inspection condition		Disconnect each device from harness and measure from connection side of harness connector.
	Requirements		There is continuity.
	Inspection result (Is the judging standard satisfied?)	YES	Go to step 7.
		NO	Modify harness.

Step 7	Inspection items		Inspection of sensor unit
	Maintenance item		Since inspection of single part is not easy, whether characteristics are deteriorated or not must be checked for the sensor mounted on the current vehicle by measuring and comparing the amount of sensor intake air of the sensor currently mounted on vehicle and that replaced with new one by the service data. **(1) Prepare for inspection** • Clean or replace air cleaner element. • Prepare a new air flow sensor. • Warm up the engine fully. **(2) Measure the intake air of current sensor** • Keep pressing the accelerator pedal until it bottom the stopper bolt from the idling state. (no load maximum rotation) • Measure the following items from among “Service data”. **<General Scanning Tool used>** • Engine speed: “Ne” (rpm) • Intake air flow rate: “Air Flow Rate from MAFS” (g/s) **<Multi-Use Tester used>** • Engine speed: 01 “Engine Revolution” (rpm) • Intake air flow rate: 3A “Air Flow Sensor Output” (g/hr) **(3) Measure the intake air of new sensor** • Replace the currently mounted sensor with a new sensor. • Keep pressing the accelerator pedal until it bottom the stopper bolt from the idling state. (no load maximum rotation) • Measure intake air flow at the same rpm as that of engine revolution in item (2) of “Service data”. **(4) Comparison whether characteristics are deteriorated** • Calculate the characteristics deterioration factor (%) by the following equation. • Characteristics deterioration factor (%) = (intake air of new item – current intake air) × 100/intake air of new item.
	Inspection condition		–
	Requirements		10% or less
	Inspection result (Is the judging standard satisfied?)	YES	Go to step 8.
		NO	Replacement of sensor

Step 8	Inspection items		Inspection by control data
	Maintenance item		Measure item No. 3A “Air Flow Sensor Output” of Service Data.
	Inspection condition		• Perform actuator test item No. A9 “EDU Relay” • Gradually press accelerator pedal.
	Requirements		The numeric value should gradually increase.
	Inspection result (Is the judging standard satisfied?)	YES	Go to transient fault (See Gr00.).
		NO	Replacement of electronic control unit

[Fault code]
Diagnosis code: P0112/Flash code: 44
[Monitor]
Abnormality of intake air temperature sensor 1
[Fault (outline)]
Low signal range check
[Diagnosis check]
- Output voltage of intake air temperature sensor 1 is monitored.

[Code generation condition]
- Voltage of intake air temperature sensor 1 remains under 0.2 V for approx. 2.5 seconds.
  (Warning lamp is lit and diagnosis code is displayed on second establishment of code generation condition.)

[Diagnosis check timing]
- When code generation condition is established after starter switch ON

[Diagnostic requirement]
- 2 seconds passed after starter switch ON
- 2 seconds passed after cranking
- Battery voltage: normal

[Control effected by electronic control unit during fault]
- Intake air temperature 1 is fixed at –20°C {–4°F} at engine start and 25°C {77°F} when engine is running.

[Probable cause of trouble]
- Open-circuit or short-circuit of harness between electronic control unit and intake air temperature sensor 1
- Abnormality of each connector
- Abnormality of intake air temperature sensor 1
- Abnormality in electronic control unit

[Recoverability]
<Control during fault>
- Recovered if signal becomes normal with starter switch in ON position.

<Warning lamp>
- Extinguished at 4th driving cycle after normal signal is input.

<Fault code>
- Automatically cleared at 40th warm up cycle after warning lamp is extinguished. (To clear as desired, erase from the memory.)

Driving cycle : “Starter switch ON to start engine till starter switch OFF” constitutes 1 driving cycle.
Warm up cycle : “Starter switch ON to start engine till starter switch OFF after coolant temperature increased and engine warmed up” constitutes 1 warm up cycle.

[Electronic Control Unit Connection Diagram]

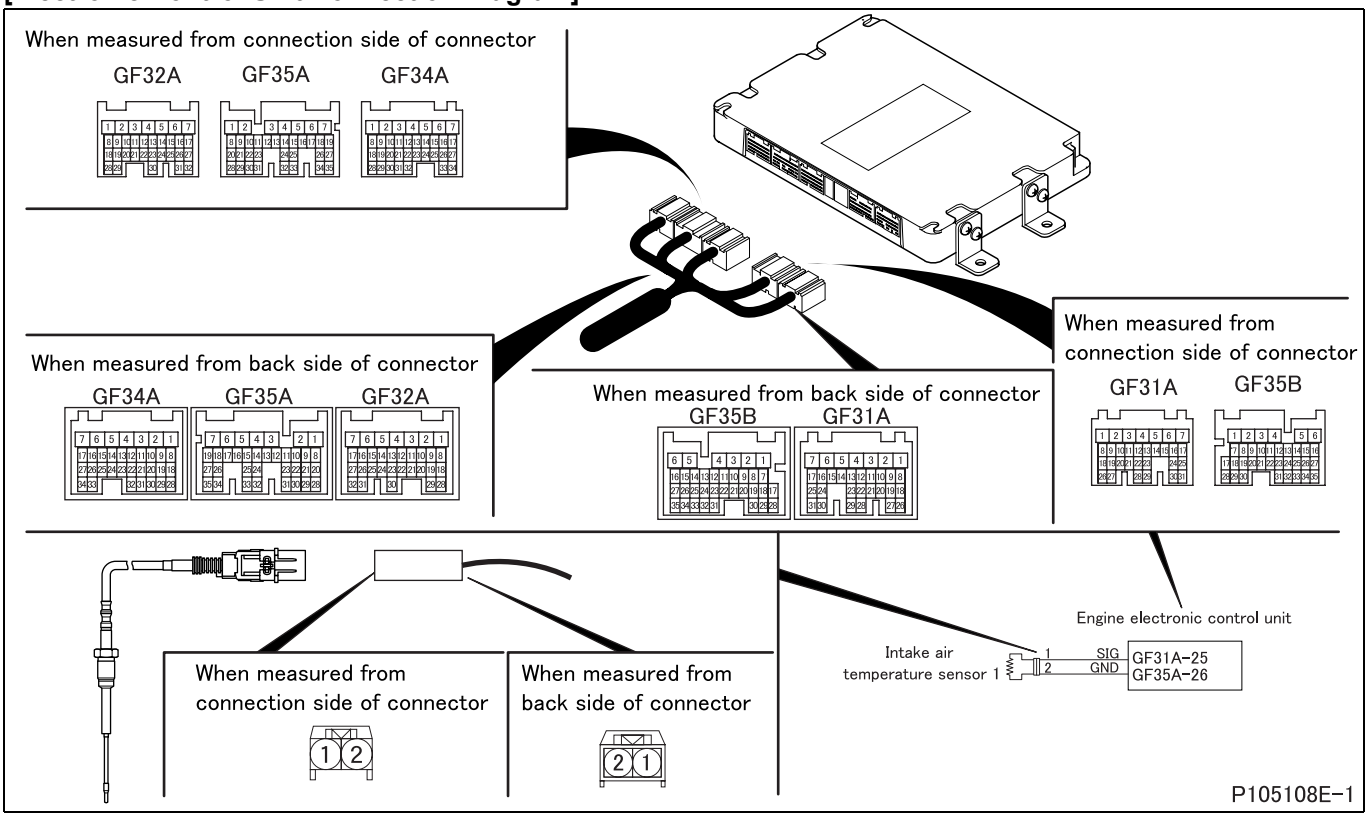

[Parts Identification and Location]

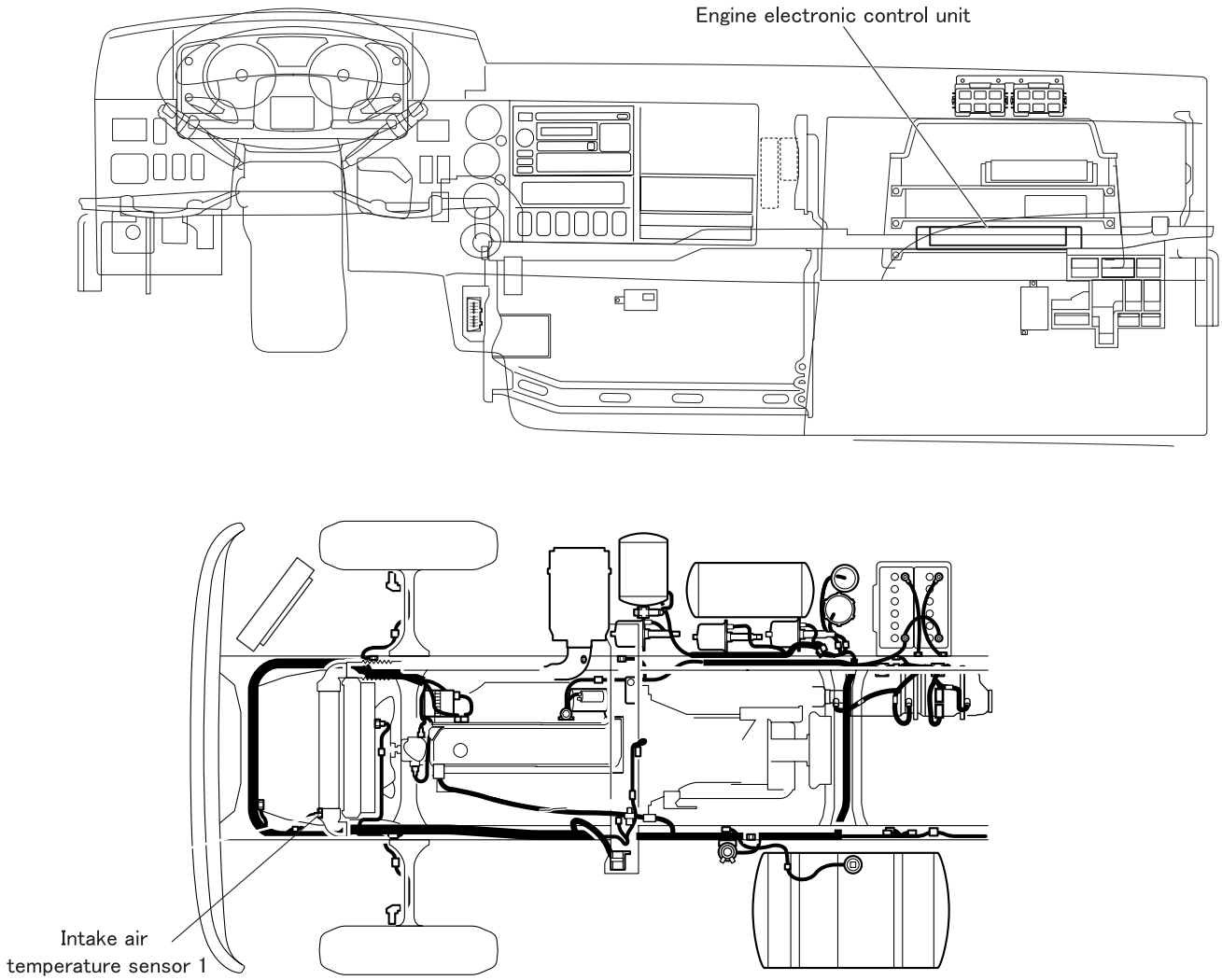

[Fault diagnosis]

- Perform checks in the sequence of the following steps.

Step 1	Inspection items		Inspection by control data
	Maintenance item		**<General Scanning Tool used>** • Measure item “Intake Air Temperature” . **<Multi-Use Tester used>** • Measure item No. 27 “Intake Air Temperature” of Service Data.
	Inspection condition		–
	Requirements		When engine is cold: Temperature is equivalent to outside temperature.
	Inspection result (Is the judging standard satisfied?)	YES	Go to transient fault (See Gr00.).
		NO	Go to step 2.

Step 2	Inspection items		Inspection by electronic control unit connector
	Maintenance item		Measure value of resistance between connector (GF31A) terminal No. 25 and (GF35A) terminal No. 26.
	Inspection condition		Disconnect electronic control unit from harness and measure from connection side of harness connector.
	Requirements		• 50°C {122°F}: 2.202 $^{+0.233}_{-0.208}$ kΩ • 100°C {212°F}: 508.1 $^{+41.3}_{-37.7}$ Ω • 150°C {302°F}: 160.4 $^{+10.3}_{-9.6}$ Ω
	Inspection result (Is the judging standard satisfied?)	YES	Go to step 3.
		NO	Go to step 4.

Step 3	Inspection items		Inspection of electronic control unit connector
	Maintenance item		Inspection of connector
	Inspection condition		–
	Requirements		• Connector is properly connected. • No trace of water entry is found. • No corrosion is found in terminal. • Connection to terminal is appropriate.
	Inspection result (Is the judging standard satisfied?)	YES	Go to step 8.
		NO	Modify connector.

Step 4	Inspection items		Inspection of intake air temperature sensor 1 connector
	Maintenance item		Inspection of connector
	Inspection condition		–
	Requirements		• Connector is properly connected. • No trace of water entry is found. • No corrosion is found in terminal. • Connection to terminal is appropriate.
	Inspection result (Is the judging standard satisfied?)	YES	Go to step 5.
		NO	Modify connector.

Step 5	Inspection items		Inspection of intake air temperature sensor 1 unit
	Maintenance item		Measure value of resistance between connector terminal No. 1 and 2.
	Inspection condition		• Put intake air temperature sensor 1 in vessel filled with engine oil. • Heat the oil to each of the specified temperatures. Stir the oil well while doing so.
	Requirements		• 50°C {122°F}: 2.202 $^{+0.233}_{-0.208}$ kΩ • 100°C {212°F}: 508.1 $^{+41.3}_{-37.7}$ Ω • 150°C {302°F}: 160.4 $^{+10.3}_{-9.6}$ Ω
	Inspection result (Is the judging standard satisfied?)	YES	Go to step 6.
		NO	Replacement of sensor

<Step 5 inspection diagram>

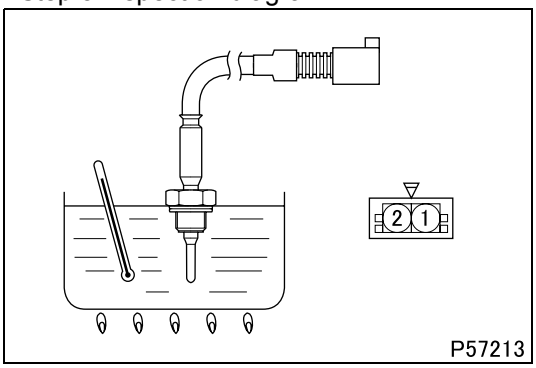

Step 6	Inspection items		Inspection of harness between electronic control unit and sensor (power supply)
	Maintenance item		Check circuit between sensor connector terminal No. 1 and electronic control unit connector (GF31A) terminal No. 25.
	Inspection condition		Disconnect each device from harness and measure from connection side of harness connector.
	Requirements		There is continuity.
	Inspection result (Is the judging standard satisfied?)	YES	Go to step 7.
		NO	Modify harness.

Step 7	Inspection items		Inspection of harness between electronic control unit and sensor (ground)
	Maintenance item		Check circuit between sensor connector terminal No. 2 and electronic control unit connector (GF35A) terminal No. 26.
	Inspection condition		Disconnect each device from harness and measure from connection side of harness connector.
	Requirements		There is continuity.
	Inspection result (Is the judging standard satisfied?)	YES	Go to step 8.
		NO	Modify harness.

Step 8	Inspection items		Inspection by control data
	Maintenance item		**<General Scanning Tool used>** • Measure item “Intake Air Temperature”. **<Multi-Use Tester used>** • Measure item No. 27 “Intake Air Temperature” of Service Data.
	Inspection condition		–
	Requirements		When engine is cold: Temperature is equivalent to outside temperature.
	Inspection result (Is the judging standard satisfied?)	YES	Go to transient fault (See Gr00.).
		NO	Replacement of electronic control unit

[Fault code]
Diagnosis code: P0113/Flash code: 44
[Monitor]
Abnormality of intake air temperature sensor 1
[Fault (outline)]
High signal range check
[Diagnosis check]
- Output voltage of intake air temperature sensor 1 is monitored.

[Code generation condition]
- Voltage of intake air temperature sensor 1 remains over 4.9 V for approx. 2.5 seconds.
  (Warning lamp is lit and diagnosis code is displayed on second establishment of code generation condition.)

[Diagnosis check timing]
- When code generation condition is established after starter switch ON

[Diagnostic requirement]
- 2 seconds passed after starter switch ON
- 2 seconds passed after cranking
- Battery voltage: normal

[Control effected by electronic control unit during fault]
- Intake air temperature 1 is fixed at –20°C {–4°F} at engine start and 25°C {77°F} when engine is running.

[Probable cause of trouble]
- Open-circuit or short-circuit of harness between electronic control unit and intake air temperature sensor 1
- Abnormality of each connector
- Abnormality of intake air temperature sensor 1
- Abnormality in electronic control unit

[Recoverability]
<Control during fault>
- Recovered if signal becomes normal with starter switch in ON position.

<Warning lamp>
- Extinguished at 4th driving cycle after normal signal is input.

<Fault code>
- Automatically cleared at 40th warm up cycle after warning lamp is extinguished. (To clear as desired, erase from the memory.)

Driving cycle : “Starter switch ON to start engine till starter switch OFF” constitutes 1 driving cycle.
Warm up cycle : “Starter switch ON to start engine till starter switch OFF after coolant temperature increased and engine warmed up” constitutes 1 warm up cycle.

[Electronic Control Unit Connection Diagram]

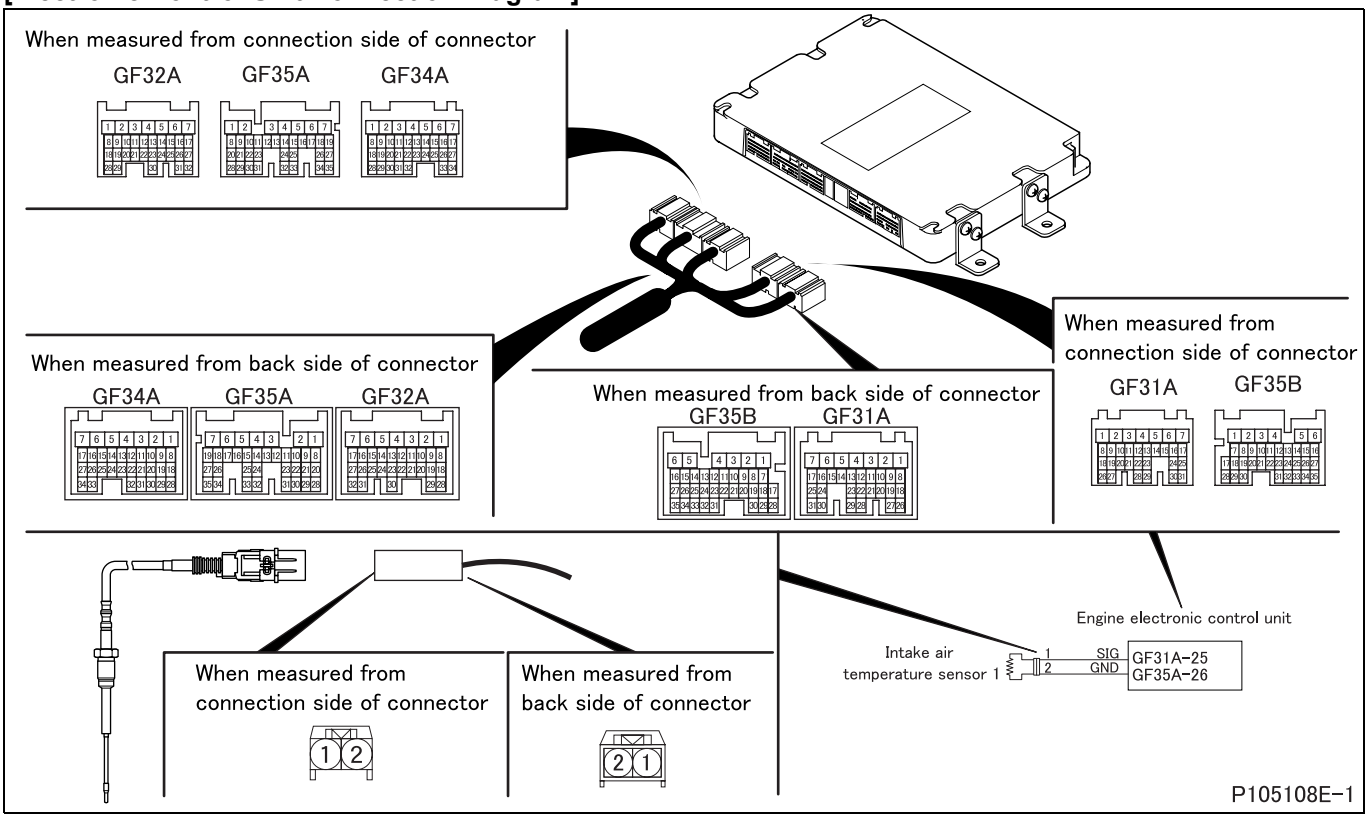

[Parts Identification and Location]

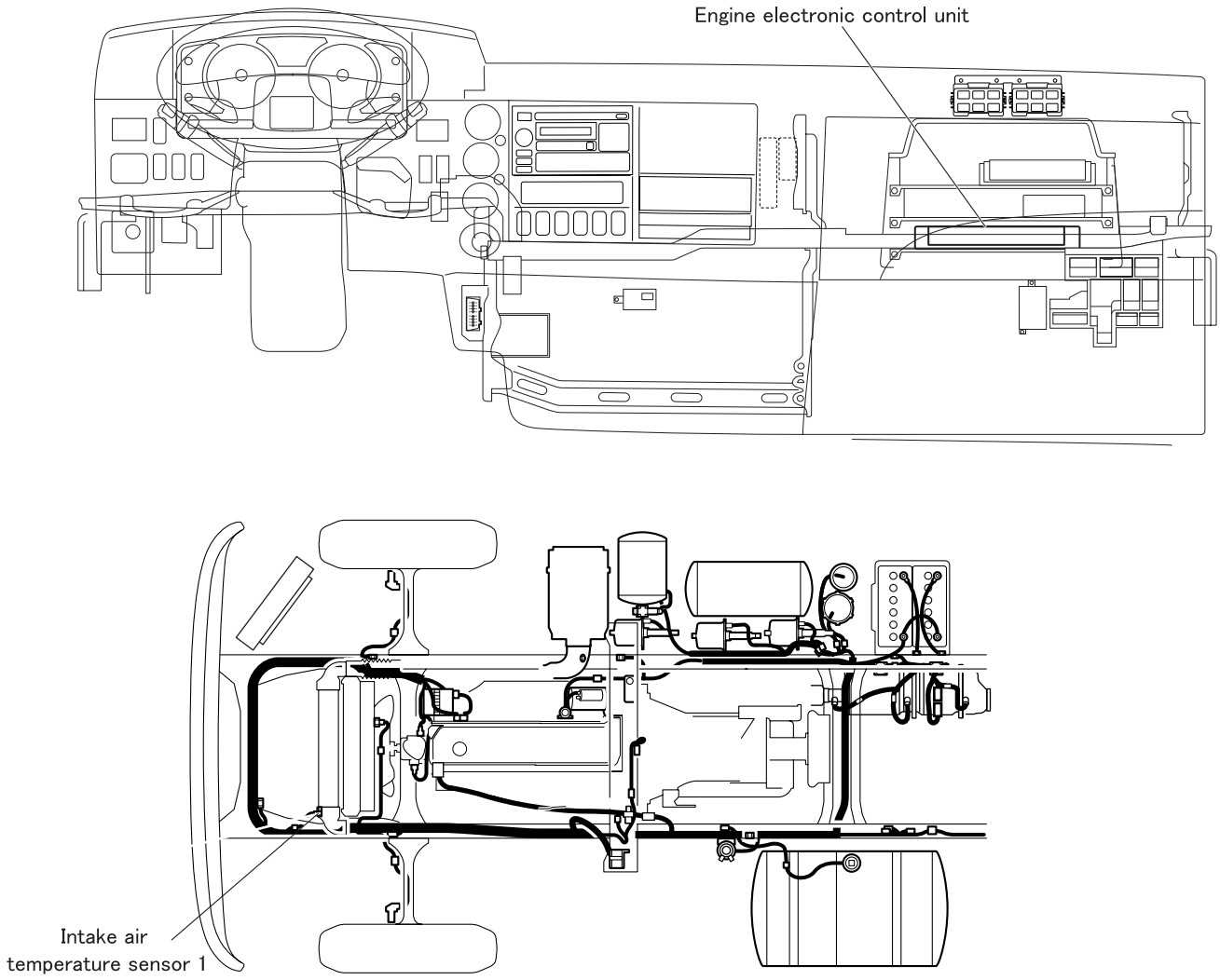

[Fault diagnosis]

- Perform checks in the sequence of the following steps.

Step 1	Inspection items		Inspection by control data
	Maintenance item		**<General Scanning Tool used>** • Measure item “Intake Air Temperature” . **<Multi-Use Tester used>** • Measure item No. 27 “Intake Air Temperature” of Service Data.
	Inspection condition		–
	Requirements		When engine is cold: Temperature is equivalent to outside temperature.
	Inspection result (Is the judging standard satisfied?)	YES	Go to transient fault (See Gr00.).
		NO	Go to step 2.

Step 2	Inspection items		Inspection by electronic control unit connector
	Maintenance item		Measure value of resistance between connector (GF31A) terminal No. 25 and (GF35A) terminal No. 26.
	Inspection condition		Disconnect electronic control unit from harness and measure from connection side of harness connector.
	Requirements		• 50°C {122°F}: 2.202 $^{+0.233}_{-0.208}$ kΩ • 100°C {212°F}: 508.1 $^{+41.3}_{-37.7}$ Ω • 150°C {302°F}: 160.4 $^{+10.3}_{-9.6}$ Ω
	Inspection result (Is the judging standard satisfied?)	YES	Go to step 3.
		NO	Go to step 4.

Step 3	Inspection items		Inspection of electronic control unit connector
	Maintenance item		Inspection of connector
	Inspection condition		–
	Requirements		• Connector is properly connected. • No trace of water entry is found. • No corrosion is found in terminal. • Connection to terminal is appropriate.
	Inspection result (Is the judging standard satisfied?)	YES	Go to step 8.
		NO	Modify connector.

Step 4	Inspection items		Inspection of intake air temperature sensor 1 connector
	Maintenance item		Inspection of connector
	Inspection condition		–
	Requirements		• Connector is properly connected. • No trace of water entry is found. • No corrosion is found in terminal. • Connection to terminal is appropriate.
	Inspection result (Is the judging standard satisfied?)	YES	Go to step 5.
		NO	Modify connector.

Step 5	Inspection items		Inspection of intake air temperature sensor 1 unit
	Maintenance item		Measure value of resistance between connector terminal No. 1 and 2.
	Inspection condition		• Put intake air temperature sensor 1 in vessel filled with engine oil. • Heat the oil to each of the specified temperatures. Stir the oil well while doing so.
	Requirements		• 50°C {122°F}: 2.202 $^{+0.233}_{-0.208}$ kΩ • 100°C {212°F}: 508.1 $^{+41.3}_{-37.7}$ Ω • 150°C {302°F}: 160.4 $^{+10.3}_{-9.6}$ Ω
	Inspection result (Is the judging standard satisfied?)	YES	Go to step 6.
		NO	Replacement of sensor

<Step 5 inspection diagram>

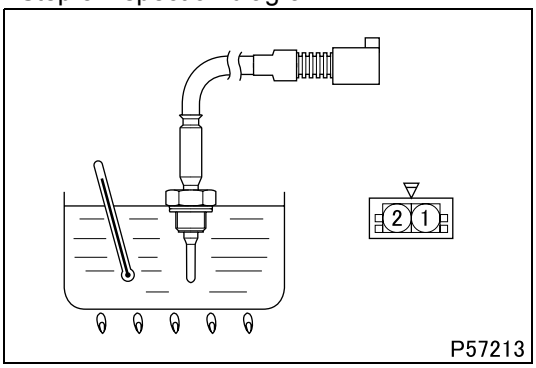

Step 6	Inspection items		Inspection of harness between electronic control unit and sensor (power supply)
	Maintenance item		Check circuit between sensor connector terminal No. 1 and electronic control unit connector (GF31A) terminal No. 25.
	Inspection condition		Disconnect each device from harness and measure from connection side of harness connector.
	Requirements		There is continuity.
	Inspection result (Is the judging standard satisfied?)	YES	Go to step 7.
		NO	Modify harness.

Step 7	Inspection items		Inspection of harness between electronic control unit and sensor (ground)
	Maintenance item		Check circuit between sensor connector terminal No. 2 and electronic control unit connector (GF35A) terminal No. 26.
	Inspection condition		Disconnect each device from harness and measure from connection side of harness connector.
	Requirements		There is continuity.
	Inspection result (Is the judging standard satisfied?)	YES	Go to step 8.
		NO	Modify harness.

Step 8	Inspection items		Inspection by control data
	Maintenance item		**<General Scanning Tool used>** • Measure item “Intake Air Temperature”. **<Multi-Use Tester used>** • Measure item No. 27 “Intake Air Temperature” of Service Data.
	Inspection condition		–
	Requirements		When engine is cold: Temperature is equivalent to outside temperature.
	Inspection result (Is the judging standard satisfied?)	YES	Go to transient fault (See Gr00.).
		NO	Replacement of electronic control unit

[Fault code]
Diagnosis code: P0116/Flash code: 21
[Monitor]
Characteristic abnormality of water temperature sensor
[Fault (outline)]
<Condition (1)>
• Gain Drift
<Condition (2)>
• Offset Drift
[Diagnosis check]
Perform the following checks.
<Condition (1)>
• Water temperature sensor output is checked to determine if it is within specified range under diagnosable conditions.
<Condition (2)>
• Check is performed if nothing abnormal is detected in condition (1).
• Water temperature after engine warm-up is checked to determine if it is within specified range.
[Code generation condition]
Diagnosis code is generated under either of the following conditions.
(Warning lamp is lit and diagnosis code is displayed on second establishment of code generation condition.)
<Condition (1)>
• Water temperature sensor output remains out of specified range for approx. 0.1 second.
<Condition (2)>
• Water temperature sensor output remains out of specified range for approx. 10 seconds.
[Diagnosis check timing]
• When code generation condition is established after starter switch ON
[Diagnostic requirement]
• Injection quantity: more than 40 mm^3/st
• Engine speed: more than 1000 rpm
• Time elapsed after engine start: more than 30 seconds
• Water temperature sensor: normal in output signal
• Intake air temperature sensor 1: normal in output signal (only condition (1))
• Battery voltage: normal
[Control effected by electronic control unit during fault]
• Effects no special control.
[Probable cause of trouble]
• Open-circuit or short-circuit of harness between electronic control unit and water temperature sensor
• Abnormality of each connector
• Abnormality of water temperature sensor
• Abnormality in electronic control unit
[Recoverability]
<Control during fault>
• Recovered if signal becomes normal with starter switch in ON position.
<Warning lamp>
• Extinguished at 4th driving cycle after normal signal is input.
<Fault code>
• Automatically cleared at 40th warm up cycle after warning lamp is extinguished. (To clear as desired, erase from the memory.)

Driving cycle : “Starter switch ON to start engine till starter switch OFF” constitutes 1 driving cycle.
Warm up cycle : “Starter switch ON to start engine till starter switch OFF after coolant temperature increased and engine warmed up” constitutes 1 warm up cycle.

[Electronic Control Unit Connection Diagram]

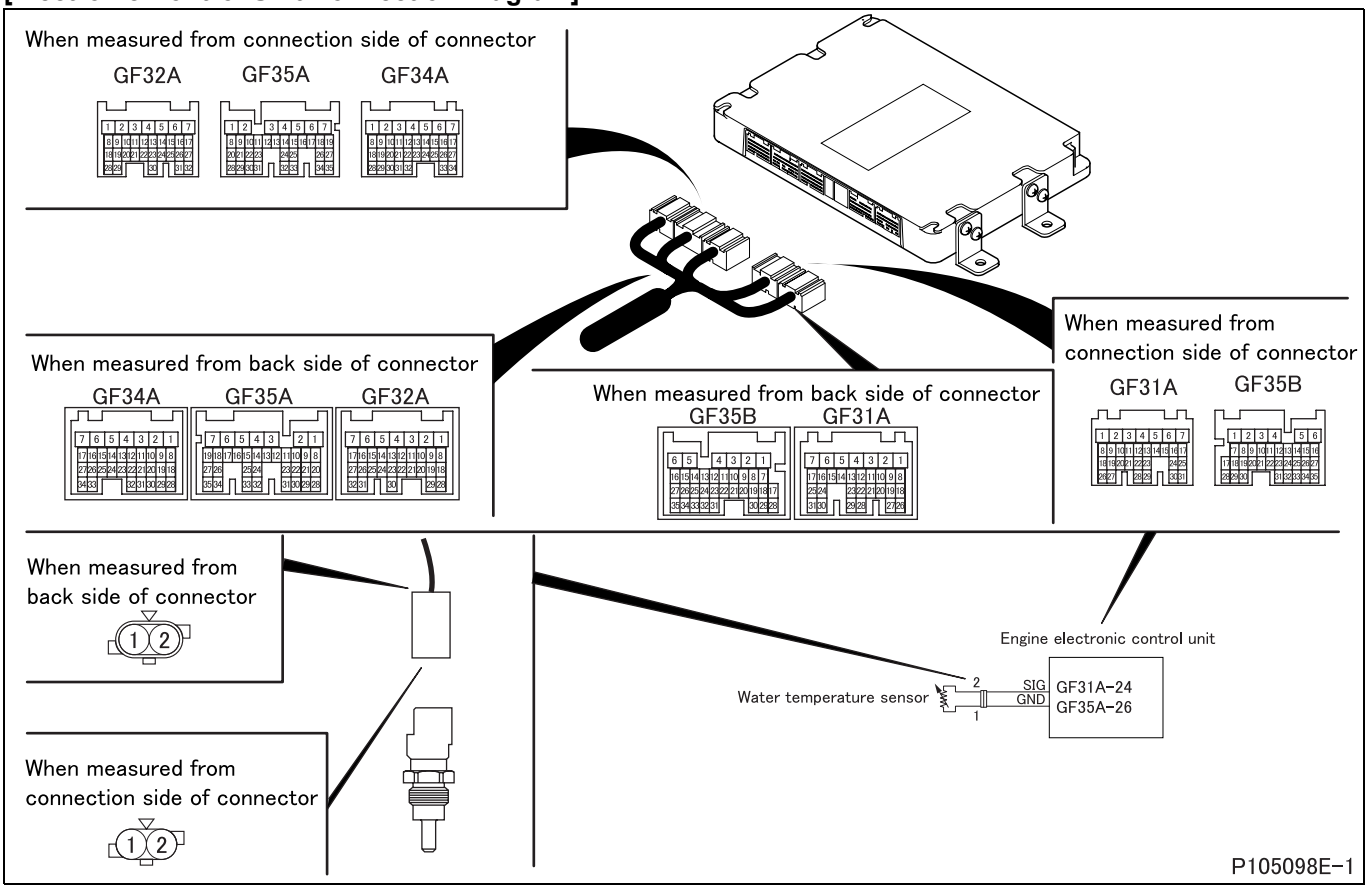

[Parts Identification and Location]

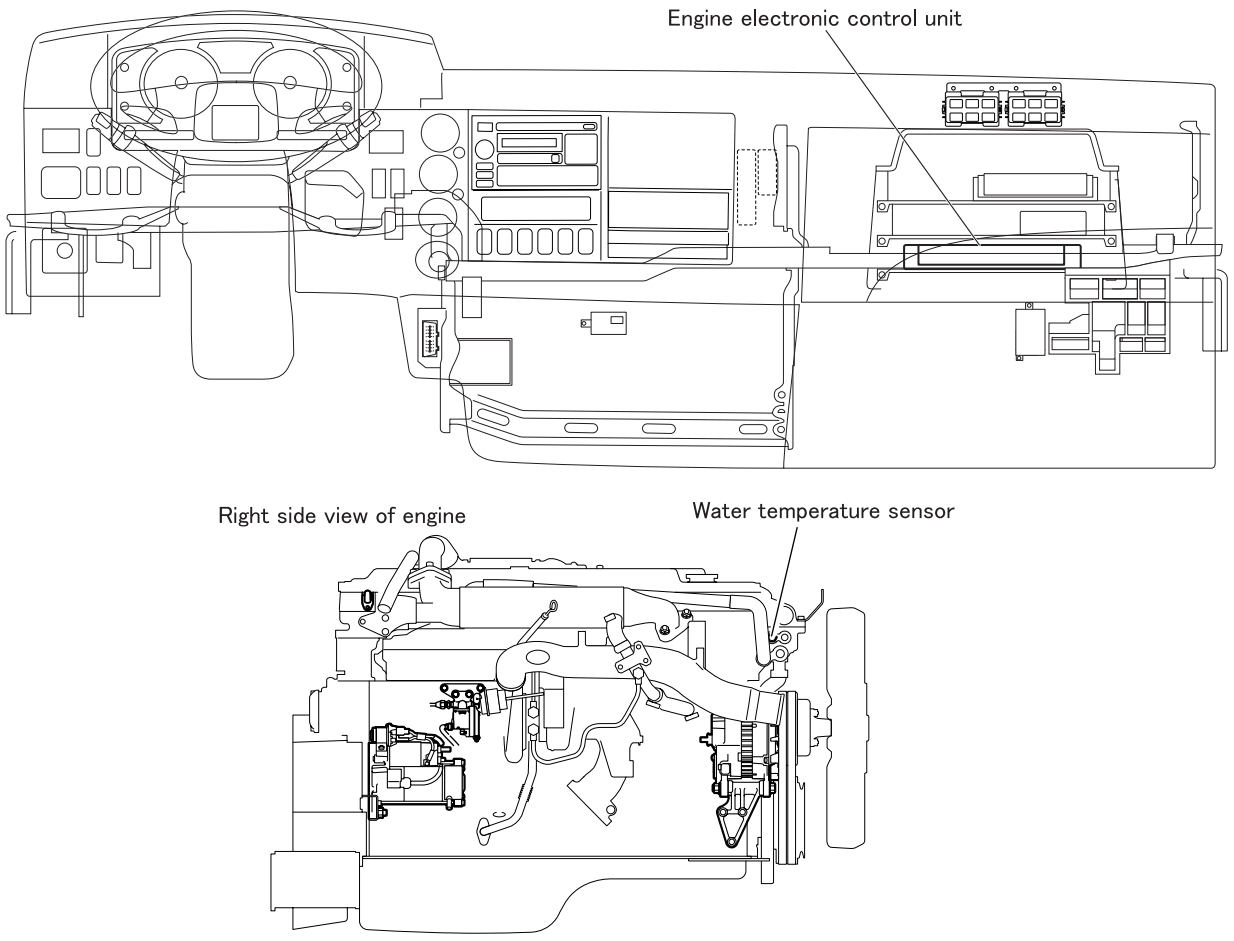

[Fault diagnosis]

- Perform checks in the sequence of the following steps.

Step 1	Inspection items		Inspection by control data
	Maintenance item		**<General Scanning Tool used>** • Measure item “Engine Coolant Temperature”. **<Multi-Use Tester used>** • Measure item No. 35 “Water Temperature” of Service Data.
	Inspection condition		–
	Requirements		• When engine is cold: Temperature is equivalent to outside temperature. • While engine is warmed up: Temperature gradually rises up. • When engine is stopped after warm-up: Temperature gradually declines.
	Inspection result (Is the judging standard satisfied?)	YES	Go to transient fault (See Gr00.).
		NO	Go to step 2.

Step 2	Inspection items		Inspection by electronic control unit connector
	Maintenance item		Measure value of resistance between connector (GF31A) terminal No. 24 and (GF35A) terminal No. 26.
	Inspection condition		Disconnect electronic control unit from harness and measure from connection side of harness connector.
	Requirements		• 20°C {68°F}: 2.45 ± 0.14 kΩ • 80°C {176°F}: 0.32 kΩ (reference value) • 110°C {230°F}: 147.1 ± 2 Ω
	Inspection result (Is the judging standard satisfied?)	YES	Go to step 3.
		NO	Go to step 4.

Step 3	Inspection items		Inspection of electronic control unit connector
	Maintenance item		Inspection of connector
	Inspection condition		–
	Requirements		• Connector is properly connected. • No trace of water entry is found. • No corrosion is found in terminal. • Connection to terminal is appropriate.
	Inspection result (Is the judging standard satisfied?)	YES	Go to step 8.
		NO	Modify harness.

Step 4	Inspection items		Inspection of water temperature sensor connector
	Maintenance item		Inspection of connector
	Inspection condition		–
	Requirements		• Connector is properly connected. • No trace of water entry is found. • No corrosion is found in terminal. • Connection to terminal is appropriate.
	Inspection result (Is the judging standard satisfied?)	YES	Go to step 5.
		NO	Modify connector.

Step 5	Inspection items		Inspection of water temperature sensor unit
	Maintenance item		Measure value of resistance between connector terminal No. 1 and 2.
	Inspection condition		• Put water temperature sensor in vessel filled with engine oil. • Heat the oil to each of the specified temperatures. Stir the oil well while doing so.
	Requirements		• 20°C {68°F}: 2.45 ± 0.14 kΩ • 80°C {176°F}: 0.32 kΩ (reference value) • 110°C {230°F}: 147.1 ± 2 Ω
	Inspection result (Is the judging standard satisfied?)	YES	Go to step 6.
		NO	Replacement of sensor

<Step 5 inspection diagram>

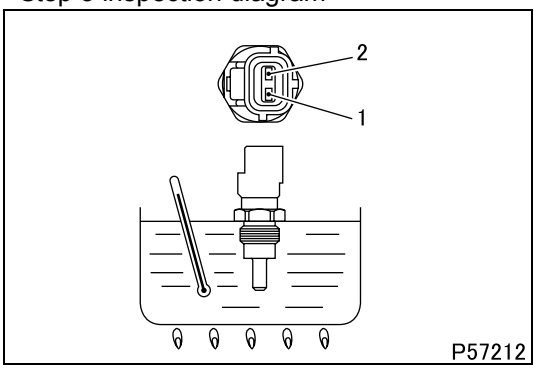

Step 6	Inspection items		Inspection of harness between electronic control unit and sensor (power supply)
	Maintenance item		Check circuit between sensor connector terminal No. 2 and electronic control unit connector (GF31A) terminal No. 24.
	Inspection condition		Disconnect each device from harness and measure from connection side of harness connector.
	Requirements		There is continuity.
	Inspection result (Is the judging standard satisfied?)	YES	Go to step 7.
		NO	Modify harness.

Step 7	Inspection items		Inspection of harness between electronic control unit and sensor (ground)
	Maintenance item		Check circuit between sensor connector terminal No. 1 and electronic control unit connector (GF35A) terminal No. 26.
	Inspection condition		Disconnect each device from harness and measure from connection side of harness connector.
	Requirements		There is continuity.
	Inspection result (Is the judging standard satisfied?)	YES	Go to step 8.
		NO	Modify harness.

Step 8	Inspection items		Inspection by control data
	Maintenance item		**<General Scanning Tool used>** • Measure item “Engine Coolant Temperature”. **<Multi-Use Tester used>** • Measure item No. 35 “Water Temperature” of Service Data.
	Inspection condition		–
	Requirements		• When engine is cold: Temperature is equivalent to outside temperature. • While engine is warmed up: Temperature gradually rises up. • When engine is stopped after warm-up: Temperature gradually declines.
	Inspection result (Is the judging standard satisfied?)	YES	Go to transient fault (See Gr00.).
		NO	Replacement of electronic control unit

[Fault code]
Diagnosis code: P0117/Flash code: 21
[Monitor]
Abnormality of water temperature sensor
[Fault (outline)]
Low signal range check
[Diagnosis check]
- Output voltage of water temperature sensor is monitored.

[Code generation condition]
- Voltage of water temperature sensor remains below 0.1 V for approx. 2.5 seconds.
  (Warning lamp is lit and diagnosis code is displayed on first establishment of code generation condition.)

[Diagnosis check timing]
- When code generation condition is established after starter switch ON

[Diagnostic requirement]
- 2 seconds passed after starter switch ON
- 2 seconds passed after cranking
- Battery voltage: normal

[Control effected by electronic control unit during fault]
- Water temperature is fixed at –20°C {–4°F} at engine start and 80°C {176°F} when engine is running (exhaust gas worsened).
- Injection quantity is limited.
- Exhaust gas recirculation control is stopped.
- Throttle control is stopped.
- Diesel particulate filter regeneration (manual or automatic) is stopped.

[Probable cause of trouble]
- Open-circuit or short-circuit of harness between electronic control unit and water temperature sensor
- Abnormality of each connector
- Abnormality of water temperature sensor
- Abnormality in electronic control unit

[Recoverability]
<Control during fault>
- Recovered if signal becomes normal with starter switch in ON position.

<Warning lamp>
- Extinguished at 4th driving cycle after normal signal is input.

<Fault code>
- Automatically cleared at 40th warm up cycle after warning lamp is extinguished. (To clear as desired, erase from the memory.)

Driving cycle : “Starter switch ON to start engine till starter switch OFF” constitutes 1 driving cycle.
Warm up cycle : “Starter switch ON to start engine till starter switch OFF after coolant temperature increased and engine warmed up” constitutes 1 warm up cycle.

[Electronic Control Unit Connection Diagram]

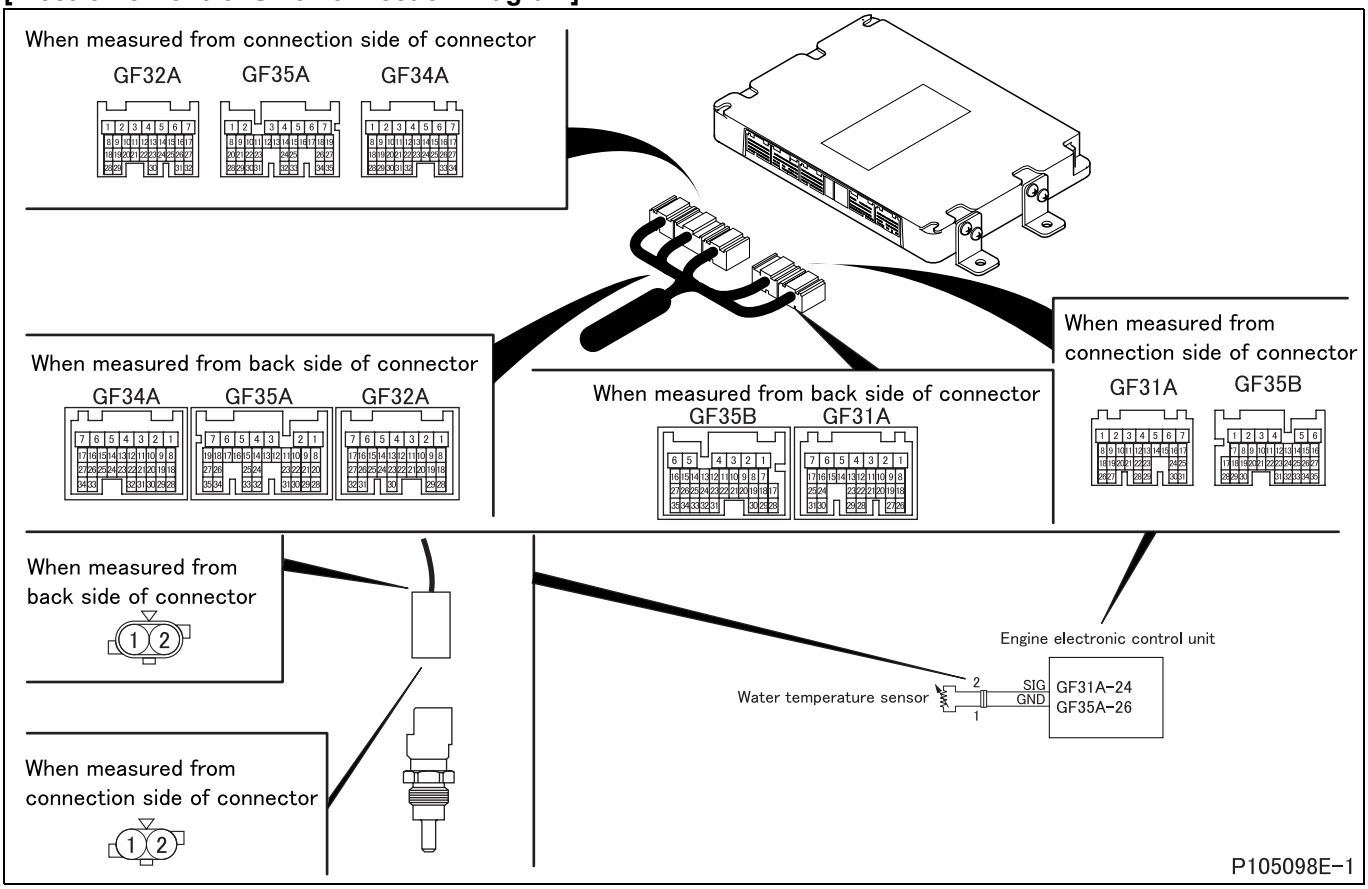

[Parts Identification and Location]

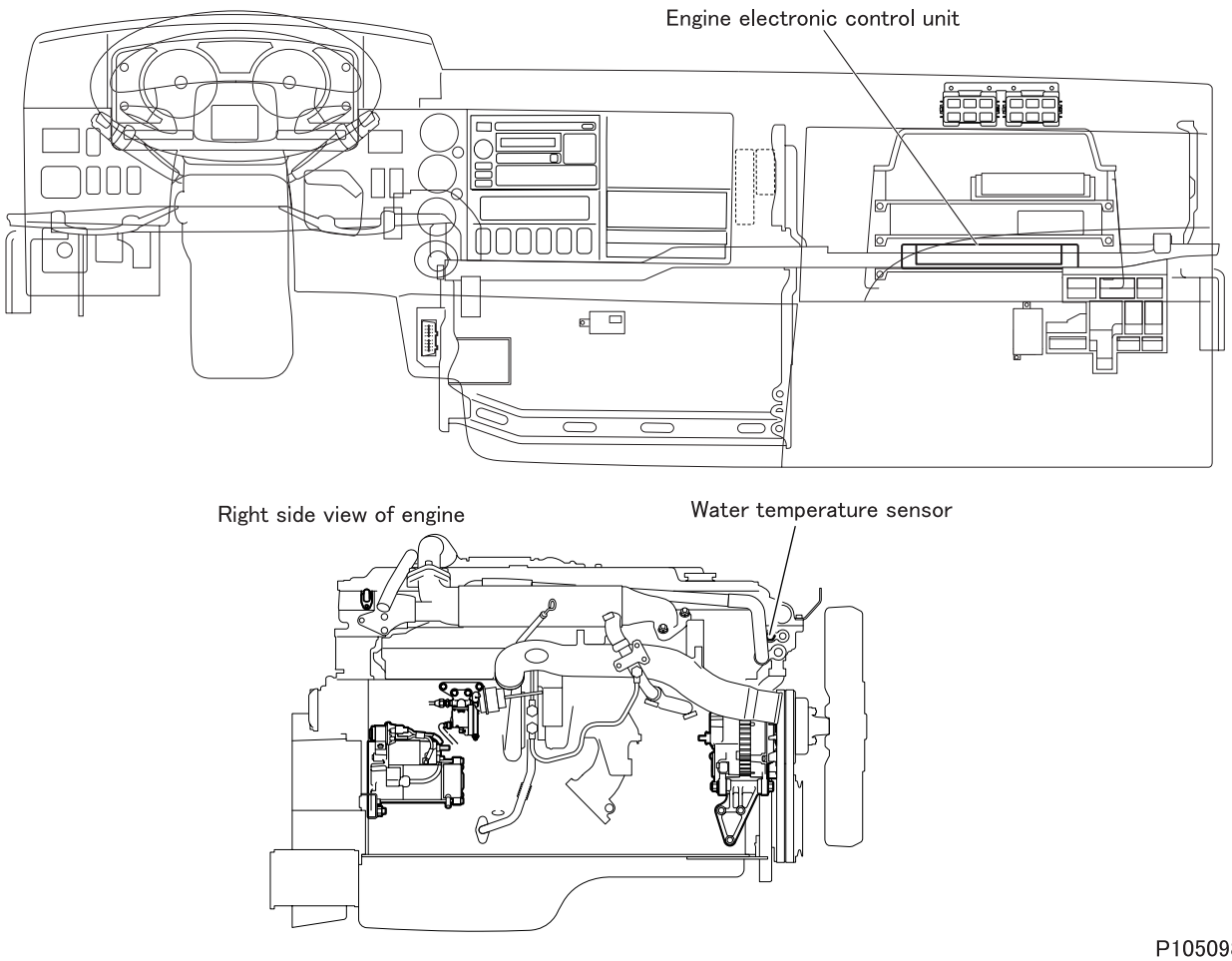

[Fault diagnosis]

- Perform checks in the sequence of the following steps.

Step 1	Inspection items		Inspection by control data
	Maintenance item		**<General Scanning Tool used>** • Measure item “Engine Coolant Temperature”. **<Multi-Use Tester used>** • Measure item No. 35 “Water Temperature” of Service Data.
	Inspection condition		–
	Requirements		• When engine is cold: Temperature is equivalent to outside temperature. • While engine is warmed up: Temperature gradually rises up. • When engine is stopped after warm-up: Temperature gradually declines.
	Inspection result (Is the judging standard satisfied?)	YES	Go to transient fault (See Gr00.).
		NO	Go to step 2.

Step 2	Inspection items		Inspection by electronic control unit connector
	Maintenance item		Measure value of resistance between connector (GF31A) terminal No. 24 and (GF35A) terminal No. 26.
	Inspection condition		Disconnect electronic control unit from harness and measure from connection side of harness connector.
	Requirements		• 20°C {68°F}: 2.45 ± 0.14 kΩ • 80°C {176°F}: 0.32 kΩ (reference value) • 110°C {230°F}: 147.1 ± 2 Ω
	Inspection result (Is the judging standard satisfied?)	YES	Go to step 3.
		NO	Go to step 4.

Step 3	Inspection items		Inspection of electronic control unit connector
	Maintenance item		Inspection of connector
	Inspection condition		–
	Requirements		• Connector is properly connected. • No trace of water entry is found. • No corrosion is found in terminal. • Connection to terminal is appropriate.
	Inspection result (Is the judging standard satisfied?)	YES	Go to step 8.
		NO	Modify harness.

Step 4	Inspection items		Inspection of water temperature sensor connector
	Maintenance item		Inspection of connector
	Inspection condition		–
	Requirements		• Connector is properly connected. • No trace of water entry is found. • No corrosion is found in terminal. • Connection to terminal is appropriate.
	Inspection result (Is the judging standard satisfied?)	YES	Go to step 5.
		NO	Modify connector.

Step 5	Inspection items		Inspection of water temperature sensor unit
	Maintenance item		Measure value of resistance between connector terminal No. 1 and 2.
	Inspection condition		• Put water temperature sensor in vessel filled with engine oil. • Heat the oil to each of the specified temperatures. Stir the oil well while doing so.
	Requirements		• 20°C {68°F}: 2.45 ± 0.14 kΩ • 80°C {176°F}: 0.32 kΩ (reference value) • 110°C {230°F}: 147.1 ± 2 Ω
	Inspection result (Is the judging standard satisfied?)	YES	Go to step 6.
		NO	Replacement of sensor

<Step 5 inspection diagram>

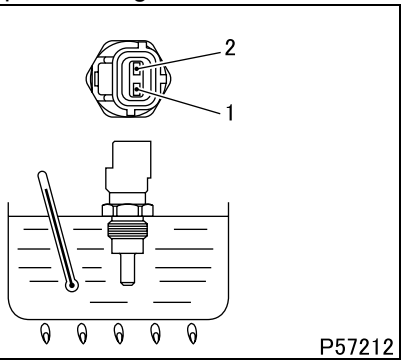

Step 6	Inspection items		Inspection of harness between electronic control unit and sensor (power supply)
	Maintenance item		Check circuit between sensor connector terminal No. 2 and electronic control unit connector (GF31A) terminal No. 24.
	Inspection condition		Disconnect each device from harness and measure from connection side of harness connector.
	Requirements		There is continuity.
	Inspection result (Is the judging standard satisfied?)	YES	Go to step 7.
		NO	Modify harness.

Step 7	Inspection items		Inspection of harness between electronic control unit and sensor (ground)
	Maintenance item		Check circuit between sensor connector terminal No. 1 and electronic control unit connector (GF35A) terminal No. 26.
	Inspection condition		Disconnect each device from harness and measure from connection side of harness connector.
	Requirements		There is continuity.
	Inspection result (Is the judging standard satisfied?)	YES	Go to step 8.
		NO	Modify harness.

Step 8	Inspection items		Inspection by control data
	Maintenance item		**<General Scanning Tool used>** • Measure item “Engine Coolant Temperature”. **<Multi-Use Tester used>** • Measure item No. 35 “Water Temperature” of Service Data.
	Inspection condition		–
	Requirements		• When engine is cold: Temperature is equivalent to outside temperature. • While engine is warmed up: Temperature gradually rises up. • When engine is stopped after warm-up: Temperature gradually declines.
	Inspection result (Is the judging standard satisfied?)	YES	Go to transient fault (See Gr00.).
		NO	Replacement of electronic control unit

[Fault code]
Diagnosis code: P0118/Flash code: 21
[Monitor]
Abnormality of water temperature sensor
[Fault (outline)]
High signal range check
[Diagnosis check]
- Output voltage of water temperature sensor is monitored.

[Code generation condition]
- Voltage of water temperature sensor remains over 4.8 V for approx. 2.5 seconds.
  (Warning lamp is lit and diagnosis code is displayed on first establishment of code generation condition.)

[Diagnosis check timing]
- When code generation condition is established after starter switch ON

[Diagnostic requirement]
- 2 seconds passed after starter switch ON
- 2 seconds passed after cranking
- Battery voltage: normal

[Control effected by electronic control unit during fault]
- Water temperature is fixed at –20°C {–4°F} at engine start and 80°C {176°F} when engine is running (exhaust gas worsened).
- Injection quantity is limited.
- Exhaust gas recirculation control is stopped.
- Throttle control is stopped.
- Diesel particulate filter regeneration (manual or automatic) is stopped.

[Probable cause of trouble]
- Open-circuit or short-circuit of harness between electronic control unit and water temperature sensor
- Abnormality of each connector
- Abnormality of water temperature sensor
- Abnormality in electronic control unit

[Recoverability]
<Control during fault>
- Recovered if signal becomes normal with starter switch in ON position.

<Warning lamp>
- Extinguished at 4th driving cycle after normal signal is input.

<Fault code>
- Automatically cleared at 40th warm up cycle after warning lamp is extinguished. (To clear as desired, erase from the memory.)

Driving cycle : “Starter switch ON to start engine till starter switch OFF” constitutes 1 driving cycle.
Warm up cycle : “Starter switch ON to start engine till starter switch OFF after coolant temperature increased and engine warmed up” constitutes 1 warm up cycle.

[Electronic Control Unit Connection Diagram]

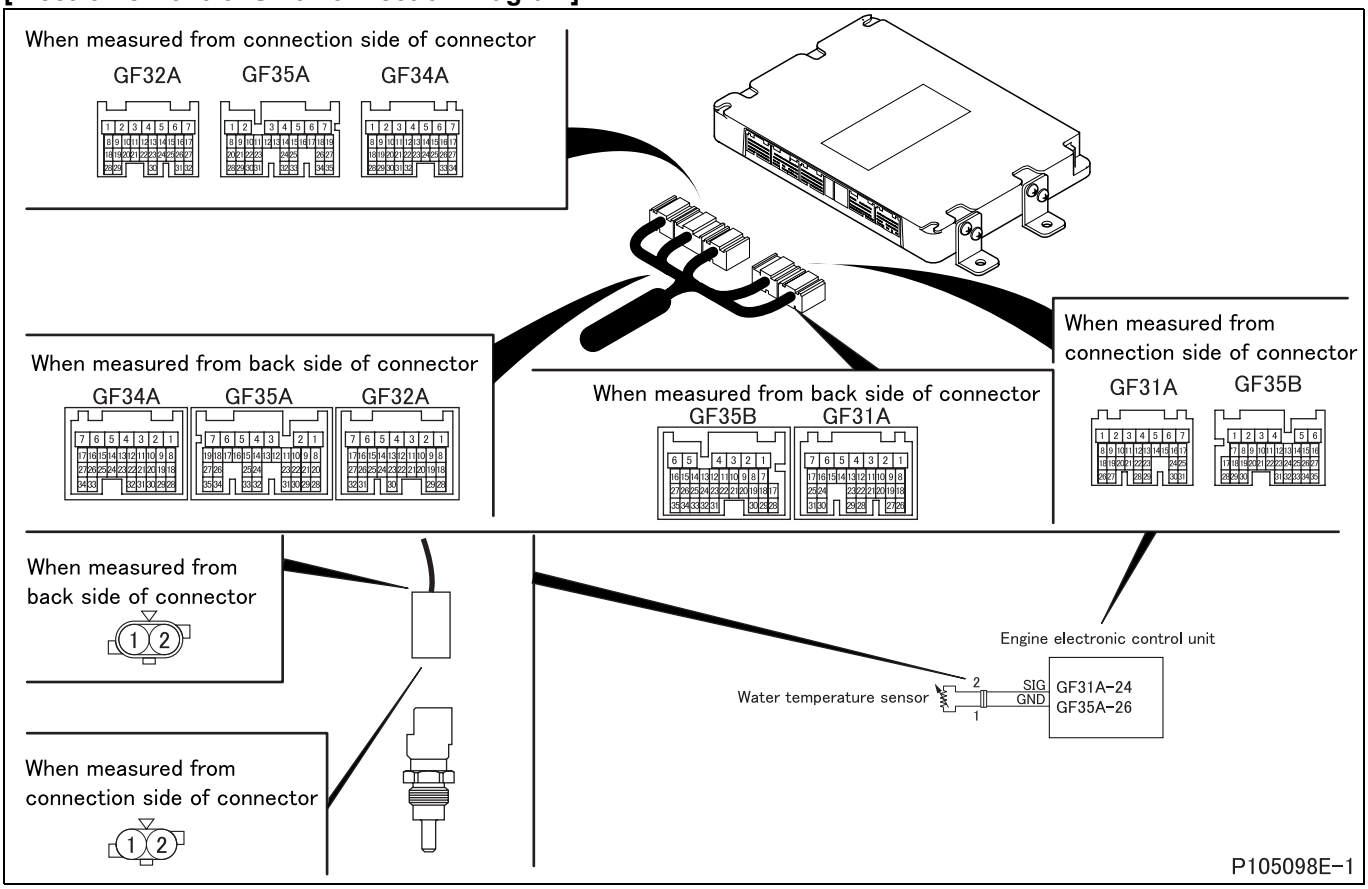

[Parts Identification and Location]

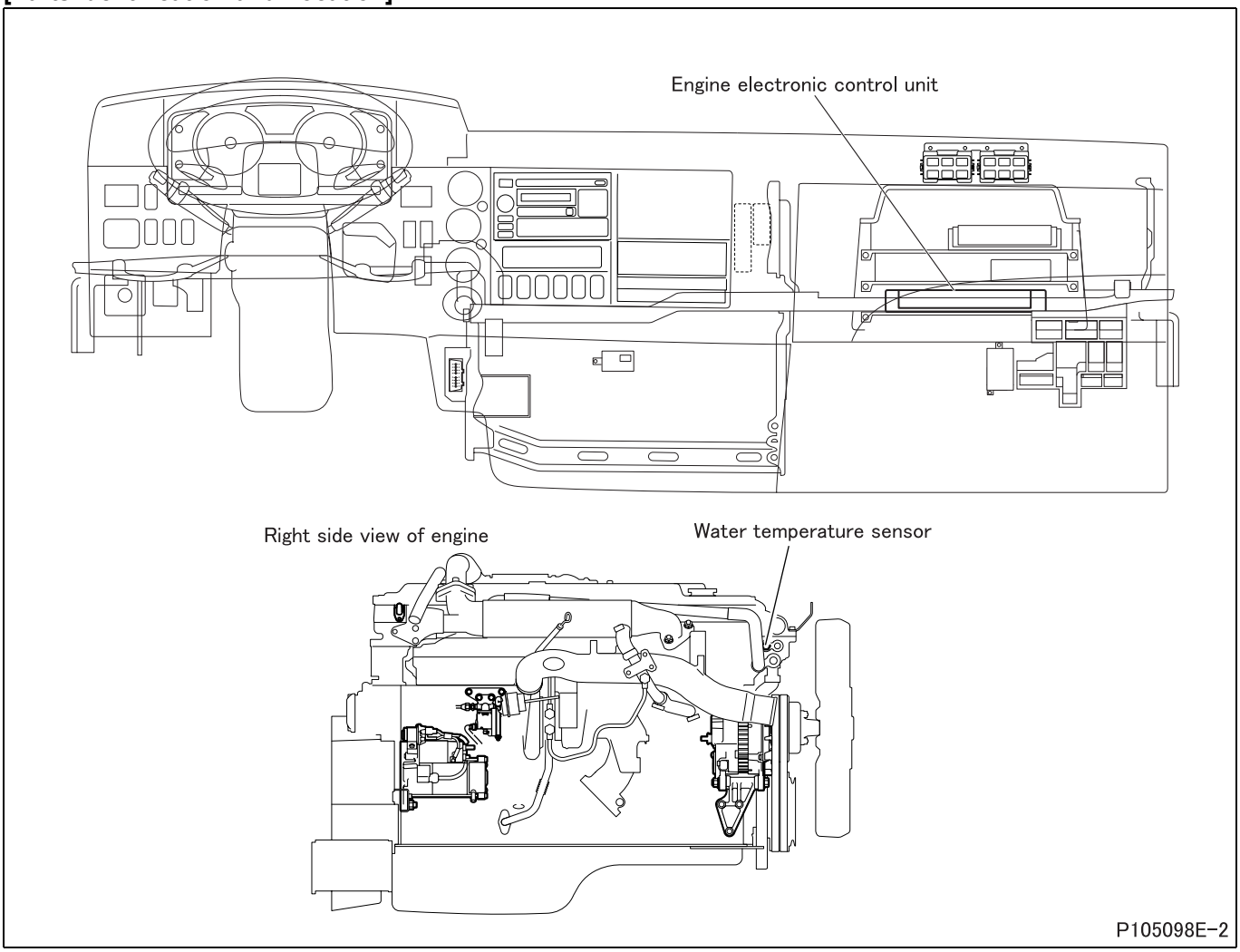

[Fault diagnosis]

- Perform checks in the sequence of the following steps.

Step 1	Inspection items		Inspection by control data
	Maintenance item		**<General Scanning Tool used>** • Measure item “Engine Coolant Temperature”. **<Multi-Use Tester used>** • Measure item No. 35 “Water Temperature” of Service Data.
	Inspection condition		–
	Requirements		• When engine is cold: Temperature is equivalent to outside temperature. • While engine is warmed up: Temperature gradually rises up. • When engine is stopped after warm-up: Temperature gradually declines.
	Inspection result (Is the judging standard satisfied?)	YES	Go to transient fault (See Gr00.).
		NO	Go to step 2.

Step 2	Inspection items		Inspection by electronic control unit connector
	Maintenance item		Measure value of resistance between connector (GF31A) terminal No. 24 and (GF35A) terminal No. 26.
	Inspection condition		Disconnect electronic control unit from harness and measure from connection side of harness connector.
	Requirements		• 20°C {68°F}: 2.45 ± 0.14 kΩ • 80°C {176°F}: 0.32 kΩ (reference value) • 110°C {230°F}: 147.1 ± 2 Ω
	Inspection result (Is the judging standard satisfied?)	YES	Go to step 3.
		NO	Go to step 4.

Step 3	Inspection items		Inspection of electronic control unit connector
	Maintenance item		Inspection of connector
	Inspection condition		–
	Requirements		• Connector is properly connected. • No trace of water entry is found. • No corrosion is found in terminal. • Connection to terminal is appropriate.
	Inspection result (Is the judging standard satisfied?)	YES	Go to step 8.
		NO	Modify harness.

Step 4	Inspection items		Inspection of water temperature sensor connector
	Maintenance item		Inspection of connector
	Inspection condition		–
	Requirements		• Connector is properly connected. • No trace of water entry is found. • No corrosion is found in terminal. • Connection to terminal is appropriate.
	Inspection result (Is the judging standard satisfied?)	YES	Go to step 5.
		NO	Modify connector.

Step 5	Inspection items		Inspection of water temperature sensor unit
	Maintenance item		Measure value of resistance between connector terminal No. 1 and 2.
	Inspection condition		• Put water temperature sensor in vessel filled with engine oil. • Heat the oil to each of the specified temperatures. Stir the oil well while doing so.
	Requirements		• 20°C {68°F}: 2.45 ± 0.14 kΩ • 80°C {176°F}: 0.32 kΩ (reference value) • 110°C {230°F}: 147.1 ± 2 Ω
	Inspection result (Is the judging standard satisfied?)	YES	Go to step 6.
		NO	Replacement of sensor

<Step 5 inspection diagram>

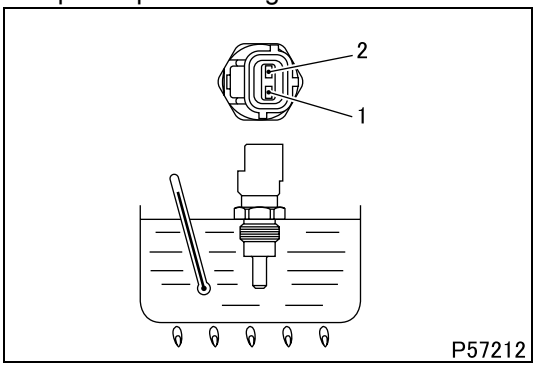

Step 6	Inspection items		Inspection of harness between electronic control unit and sensor (power supply)
	Maintenance item		Check circuit between sensor connector terminal No. 2 and electronic control unit connector (GF31A) terminal No. 24.
	Inspection condition		Disconnect each device from harness and measure from connection side of harness connector.
	Requirements		There is continuity.
	Inspection result (Is the judging standard satisfied?)	YES	Go to step 7.
		NO	Modify harness.

Step 7	Inspection items		Inspection of harness between electronic control unit and sensor (ground)
	Maintenance item		Check circuit between sensor connector terminal No. 1 and electronic control unit connector (GF35A) terminal No. 26.
	Inspection condition		Disconnect each device from harness and measure from connection side of harness connector.
	Requirements		There is continuity.
	Inspection result (Is the judging standard satisfied?)	YES	Go to step 8.
		NO	Modify harness.

Step 8	Inspection items		Inspection by control data
	Maintenance item		**<General Scanning Tool used>** • Measure item “Engine Coolant Temperature”. **<Multi-Use Tester used>** • Measure item No. 35 “Water Temperature” of Service Data.
	Inspection condition		–
	Requirements		• When engine is cold: Temperature is equivalent to outside temperature. • While engine is warmed up: Temperature gradually rises up. • When engine is stopped after warm-up: Temperature gradually declines.
	Inspection result (Is the judging standard satisfied?)	YES	Go to transient fault (See Gr00.).
		NO	Replacement of electronic control unit

[Fault code]
Diagnosis code: P0122/Flash code: 24
[Monitor]
Abnormality of accelerator pedal position sensor 1
[Fault (outline)]
Low signal range check
[Diagnosis check]
- Accelerator pedal position is monitored through accelerator pedal position sensor 1 to determine if it is within specified range.

[Code generation condition]
- Voltage of accelerator pedal position sensor 1 remains below 0.5 V for approx. 1 second.
  (Warning lamp is lit and diagnosis code is displayed on first establishment of code generation condition.)

[Diagnosis check timing]
- When code generation condition is established after starter switch ON

[Diagnostic requirement]
- 2 seconds passed after starter switch ON
- 2 seconds passed after cranking
- Battery voltage: normal

[Control effected by electronic control unit during fault]
- Control is carried out using output from accelerator pedal position sensor 2.
- When sensor 1 and 2 malfunctions, control is effected with accelerator pedal judged released from foot pressure.

[Probable cause of trouble]
- Open-circuit or short-circuit of harness between electronic control unit and accelerator pedal position sensor 1
- Abnormality of each connector
- Abnormality in electronic control unit

[Recoverability]
<Control during fault>
- Recovered if signal becomes normal with starter switch in ON position.

<Warning lamp>
- Extinguished at 4th driving cycle after normal signal is input.

<Fault code>
- Automatically cleared at 40th warm up cycle after warning lamp is extinguished. (To clear as desired, erase from the memory.)

Driving cycle : “Starter switch ON to start engine till starter switch OFF” constitutes 1 driving cycle.
Warm up cycle : “Starter switch ON to start engine till starter switch OFF after coolant temperature increased and engine warmed up” constitutes 1 warm up cycle.

[Electronic Control Unit Connection Diagram]

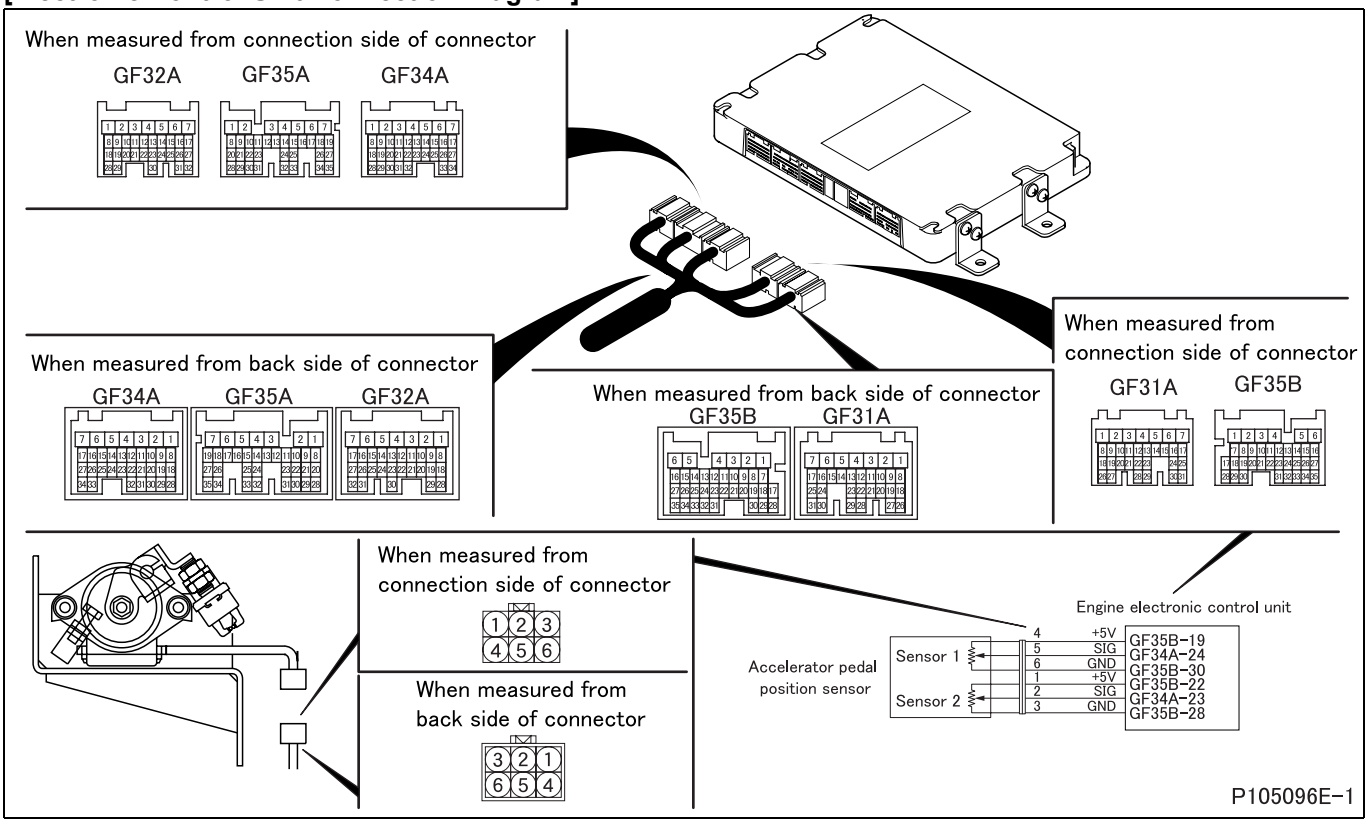

[Parts Identification and Location]

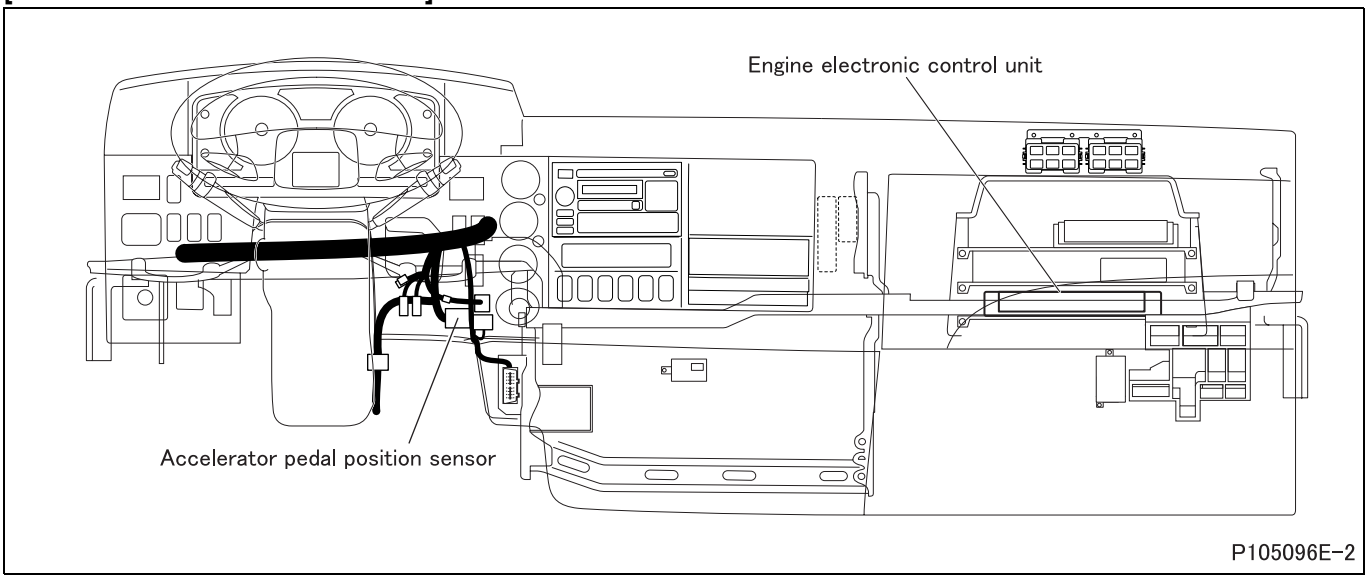

[Fault diagnosis]

- Perform checks in the sequence of the following steps.

Step 1	Inspection items		Inspection by control data
	Maintenance item		**<General Scanning Tool used>** • Measure “Accelerator Pedal Position 1”. **<Multi-Use Tester used>** • Measure item No. 24 “Accelerator Pedal Sensor Voltage 1” of Service Data.
	Inspection condition		–
	Requirements		**<General Scanning Tool used>** • Accelerator pedal not pressed: 0% • Accelerator pedal pressed: 100% **<Multi-Use Tester used>** • Accelerator pedal not pressed: 0.85 ± 0.1 V • Accelerator pedal pressed: 4.15 ± 0.1 V
	Inspection result (Is the judging standard satisfied?)	YES	Go to transient fault (See Gr00.).
		NO	Go to step 2.

Step 2	Inspection items		Inspection by electronic control unit connector (signal)
	Maintenance item		Measure value of voltage between connector (GF34A) terminal No. 24 (+) and (GF35B) terminal No. 30 (–).
	Inspection condition		• Starter switch: ON • Engine is stopped. • Measure from back side of connector of harness with each device connected to harness.
	Requirements		• Accelerator pedal not pressed: 0.85 ± 0.1 V • Accelerator pedal pressed: 4.15 ± 0.1 V
	Inspection result (Is the judging standard satisfied?)	YES	Go to step 5.
		NO	Go to step 3.

Step 3	Inspection items		Inspection by electronic control unit connector (power supply)
	Maintenance item		Measure value of voltage between connector (GF35B) terminal No. 19 (+) and No. 30 (–).
	Inspection condition		• Starter switch: ON • Engine is stopped. • Measure from back side of connector of harness with each device connected to harness.
	Requirements		5 V
	Inspection result (Is the judging standard satisfied?)	YES	Go to step 4.
		NO	Go to step 5.

Step 4	Inspection items		Inspection by electronic control unit connector (ground)
	Maintenance item		Measure value of voltage between connector (GF35B) terminal No. 30 (+) and (GF31A) terminal No. 3 (–).
	Inspection condition		• Starter switch: ON • Engine is stopped. • Measure from back side of connector of harness with each device connected to harness.
	Requirements		0 V
	Inspection result (Is the judging standard satisfied?)	YES	Go to step 6.
		NO	Go to step 5.

Step 5	Inspection items		Inspection of electronic control unit connector
	Maintenance item		Inspection of connector
	Inspection condition		–
	Requirements		• Connector is properly connected. • No trace of water entry is found. • No corrosion is found in terminal. • Connection to terminal is appropriate.
	Inspection result (Is the judging standard satisfied?)	YES	Go to step 12.
		NO	Modify connector.

Step 6	Inspection items		Inspection of sensor connector
	Maintenance item		Inspection of connector
	Inspection condition		–
	Requirements		• Connector is properly connected. • No trace of water entry is found. • No corrosion is found in terminal. • Connection to terminal is appropriate.
	Inspection result (Is the judging standard satisfied?)	YES	Go to step 7.
		NO	Modify connector.

Step 7	Inspection items		Inspection of accelerator pedal position sensor 1 unit
	Maintenance item		Measure value of voltage between connector terminals No. 5 (+) and 6 (–).
	Inspection condition		Apply voltage DC 5 V across connector terminals No. 4 (+) and 6 (–).

	Requirements		• Idle position A: 0.85 ± 0.1 V
			• Accelerator pedal switch operating position B: 1.0 ± 0.2 V
			• Full load position C: 4.15 ± 0.1 V
			  • A: When accelerator lever fully presses accelerator pedal switch.
			  • B: When accelerator pedal is pressed until there is no continuity between accelerator pedal switch connector terminals 1 and 2.
			  • C: When accelerator lever is in contact with full load stopper bolt.

	Inspection result (Is the judging standard satisfied?)	YES	Go to step 8.
		NO	Adjustment of sensor (If the measurement deviates from the standard value after adjustment, replace the sensor.) (See “INSPECTION OF ELECTRICAL EQUIPMENT” – “Inspection of accelerator pedal position sensor”.)

<Step 7 inspection diagram>

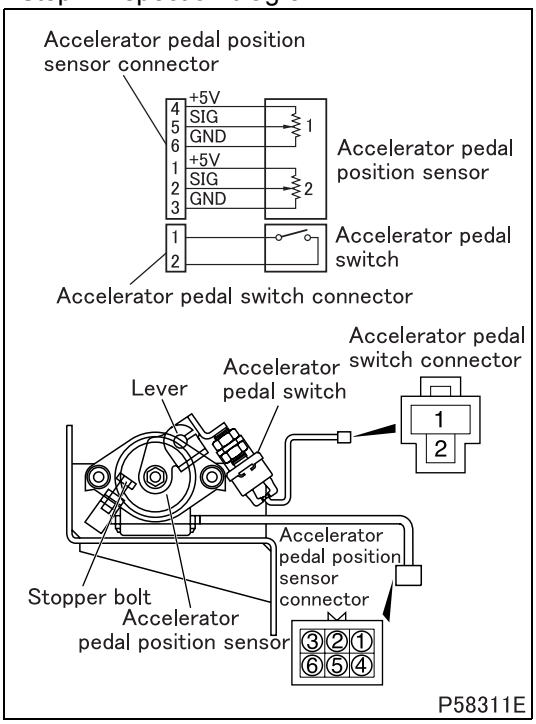

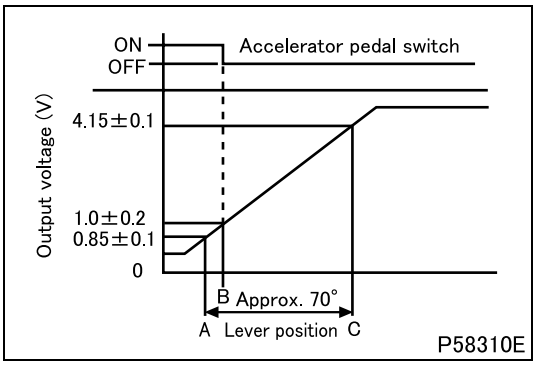

Step 8	Inspection items		Inspection by sensor connector
	Maintenance item		Measure value of voltage between connector terminal No. 4 (+) and 6 (–).
	Inspection condition		• Starter switch: ON • Engine is stopped. • Measure from back side of connector of harness with each device connected to harness.
	Requirements		5 V
	Inspection result (Is the judging standard satisfied?)	YES	Go to step 10.
		NO	Go to step 9.

Step 9	Inspection items		Inspection of harness between electronic control unit and sensor (power supply)
	Maintenance item		Check circuit between electronic control unit connector (GF35B) terminal No. 19 and sensor connector terminal No. 4.
	Inspection condition		Disconnect each device from harness and measure from connection side of harness connector.
	Requirements		There is continuity.
	Inspection result (Is the judging standard satisfied?)	YES	Go to step 12.
		NO	Modify harness.

Step 10	Inspection items		Inspection of harness between electronic control unit and sensor (ground)
	Maintenance item		Check circuit between electronic control unit connector (GF35B) terminal No. 30 and sensor connector terminal No. 6.
	Inspection condition		Disconnect each device from harness and measure from connection side of harness connector.
	Requirements		There is continuity.
	Inspection result (Is the judging standard satisfied?)	YES	Go to step 11.
		NO	Modify harness.

Step 11	Inspection items		Inspection of harness between electronic control unit and sensor (signal)
	Maintenance item		Check circuit between electronic control unit connector (GF34A) terminal No. 24 and sensor connector terminal No. 5.
	Inspection condition		Disconnect each device from harness and measure from connection side of harness connector.
	Requirements		There is continuity.
	Inspection result (Is the judging standard satisfied?)	YES	Go to step 12.
		NO	Modify harness.

Step 12	Inspection items		Inspection by control data
	Maintenance item		**<General Scanning Tool used>** • Measure item “Accelerator Pedal Position 1”. **<Multi-Use Tester used>** • Measure item No. 24 “Accel Pedal Sensor Voltage 1” of Service Data.
	Inspection condition		–
	Requirements		**<General Scanning Tool used>** • Accelerator pedal not pressed: 0% • Accelerator pedal pressed: 100% **<Multi-Use Tester used>** • Accelerator pedal not pressed: 0.85 ± 0.1 V • Accelerator pedal pressed: 4.15 ± 0.1 V
	Inspection result (Is the judging standard satisfied?)	YES	Go to transient fault (See Gr00.).
		NO	Replacement of electronic control unit

[Fault code]
Diagnosis code: P0123/Flash code: 24
[Monitor]
Abnormality of accelerator pedal position sensor 1
[Fault (outline)]
High signal range check
[Diagnosis check]
- Output voltage of accelerator pedal position sensor 1 is monitored.

[Code generation condition]
- Voltage of accelerator pedal position sensor 1 remains over 4.5 V for approx. 1 second.
  (Warning lamp is lit and diagnosis code is displayed on first establishment of code generation condition.)

[Diagnosis check timing]
- When code generation condition is established after starter switch ON

[Diagnostic requirement]
- 2 seconds passed after starter switch ON
- 2 seconds passed after cranking
- Battery voltage: normal

[Control effected by electronic control unit during fault]
- Control is carried out using output from accelerator pedal position sensor 2.
- When sensor 1 and 2 malfunctions, control is effected with accelerator pedal judged released from foot pressure.

[Probable cause of trouble]
- Open-circuit or short-circuit of harness between electronic control unit and accelerator pedal position sensor 1
- Abnormality of each connector
- Abnormality of accelerator pedal position sensor 1
- Abnormality in electronic control unit

[Recoverability]
<Control during fault>
- Recovered if signal becomes normal with starter switch in ON position.

<Warning lamp>
- Extinguished at 4th driving cycle after normal signal is input.

<Fault code>
- Automatically cleared at 40th warm up cycle after warning lamp is extinguished. (To clear as desired, erase from the memory.)

Driving cycle : “Starter switch ON to start engine till starter switch OFF” constitutes 1 driving cycle.
Warm up cycle : “Starter switch ON to start engine till starter switch OFF after coolant temperature increased and engine warmed up” constitutes 1 warm up cycle.

[Electronic Control Unit Connection Diagram]

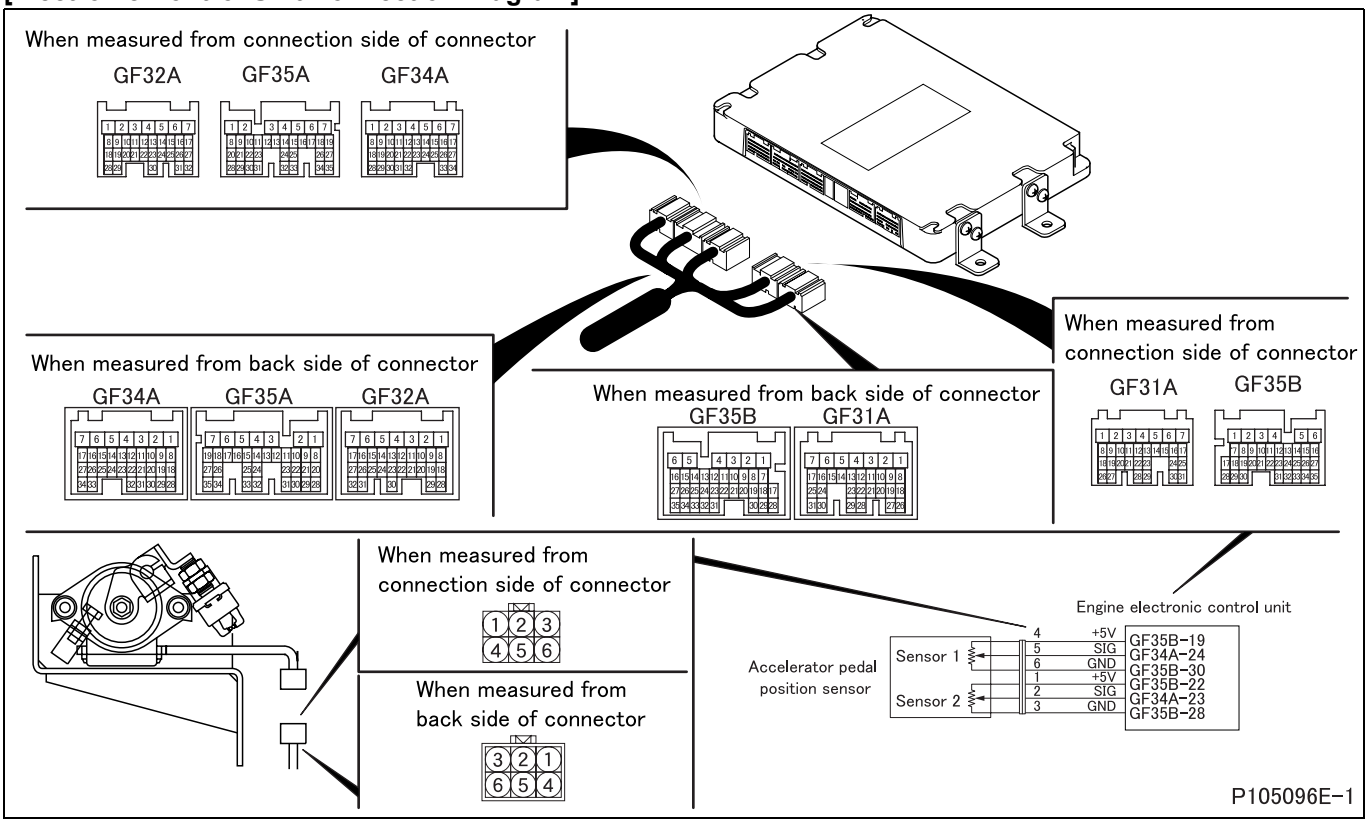

[Parts Identification and Location]

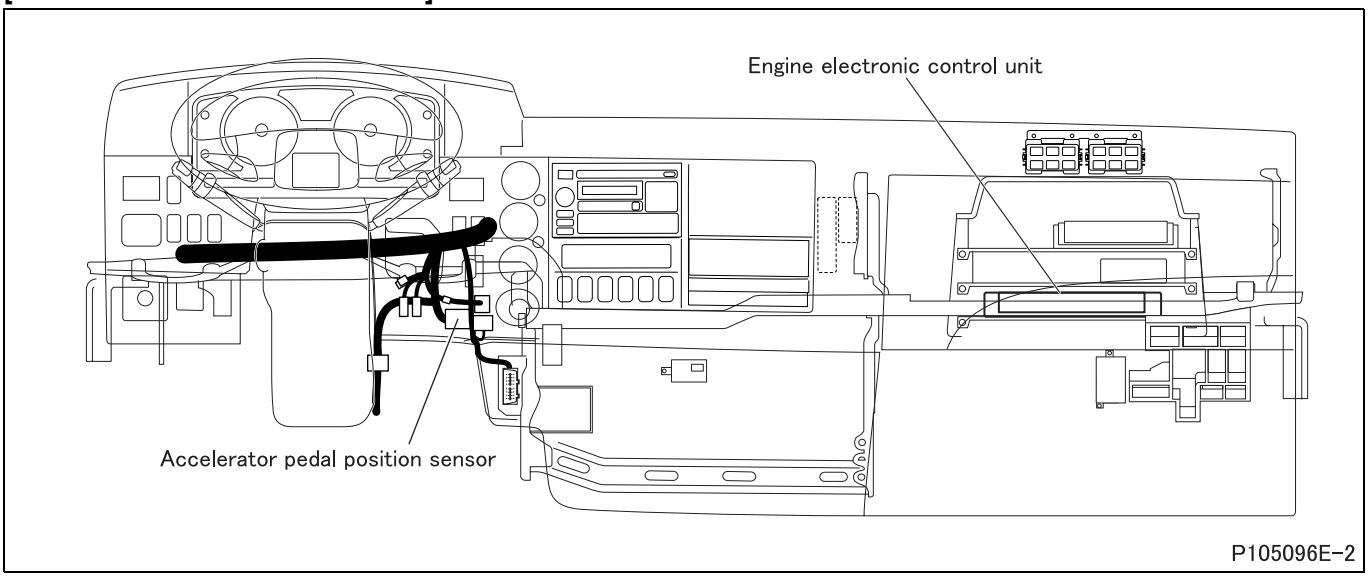

[Fault diagnosis]

- Perform checks in the sequence of the following steps.

Step 1	Inspection items		Inspection by control data
	Maintenance item		**<General Scanning Tool used>** • Measure “Accelerator Pedal Position 1”. **<Multi-Use Tester used>** • Measure item No. 24 “Accelerator Pedal Sensor Voltage 1” of Service Data.
	Inspection condition		–
	Requirements		**<General Scanning Tool used>** • Accelerator pedal not pressed: 0% • Accelerator pedal pressed: 100% **<Multi-Use Tester used>** • Accelerator pedal not pressed: 0.85 ± 0.1 V • Accelerator pedal pressed: 4.15 ± 0.1 V
	Inspection result (Is the judging standard satisfied?)	YES	Go to transient fault (See Gr00.).
		NO	Go to step 2.

Step 2	Inspection items		Inspection by electronic control unit connector (signal)
	Maintenance item		Measure value of voltage between connector (GF34A) terminal No. 24 (+) and (GF35B) terminal No. 30 (–).
	Inspection condition		• Starter switch: ON • Engine is stopped. • Measure from back side of connector of harness with each device connected to harness.
	Requirements		• Accelerator pedal not pressed: 0.85 ± 0.1 V • Accelerator pedal pressed: 4.15 ± 0.1 V
	Inspection result (Is the judging standard satisfied?)	YES	Go to step 5.
		NO	Go to step 3.

Step 3	Inspection items		Inspection by electronic control unit connector (power supply)
	Maintenance item		Measure value of voltage between connector (GF35B) terminal No. 19 (+) and No. 30 (–).
	Inspection condition		• Starter switch: ON • Engine is stopped. • Measure from back side of connector of harness with each device connected to harness.
	Requirements		5 V
	Inspection result (Is the judging standard satisfied?)	YES	Go to step 4.
		NO	Go to step 5.

Step 4	Inspection items		Inspection by electronic control unit connector (ground)
	Maintenance item		Measure value of voltage between connector (GF35B) terminal No. 30 (+) and (GF31A) terminal No. 3 (–).
	Inspection condition		• Starter switch: ON • Engine is stopped. • Measure from back side of connector of harness with each device connected to harness.
	Requirements		0 V
	Inspection result (Is the judging standard satisfied?)	YES	Go to step 6.
		NO	Go to step 5.

Step 5	Inspection items		Inspection of electronic control unit connector
	Maintenance item		Inspection of connector
	Inspection condition		–
	Requirements		• Connector is properly connected. • No trace of water entry is found. • No corrosion is found in terminal. • Connection to terminal is appropriate.
	Inspection result (Is the judging standard satisfied?)	YES	Go to step 12.
		NO	Modify connector.

Step 6	Inspection items		Inspection of sensor connector
	Maintenance item		Inspection of connector
	Inspection condition		–
	Requirements		• Connector is properly connected. • No trace of water entry is found. • No corrosion is found in terminal. • Connection to terminal is appropriate.
	Inspection result (Is the judging standard satisfied?)	YES	Go to step 7.
		NO	Modify connector.

Step 7	Inspection items		Inspection of accelerator pedal position sensor 1 unit
	Maintenance item		Measure value of voltage between connector terminals No. 5 (+) and 6 (–).
	Inspection condition		Apply voltage DC 5 V across connector terminals No. 4 (+) and 6 (–).

	Requirements		• Idle position A: 0.85 ± 0.1 V
			• Accelerator pedal switch operating position B: 1.0 ± 0.2 V
			• Full load position C: 4.15 ± 0.1 V
			  • A: When accelerator lever fully presses accelerator pedal switch.
			  • B: When accelerator pedal is pressed until there is no continuity between accelerator pedal switch connector terminals 1 and 2.
			  • C: When accelerator lever is in contact with full load stopper bolt.

	Inspection result (Is the judging standard satisfied?)	YES	Go to step 8.
		NO	Adjustment of sensor (If the measurement deviates from the standard value after adjustment, replace the sensor.) (See “INSPECTION OF ELECTRICAL EQUIPMENT” – “Inspection of accelerator pedal position sensor”.)

<Step 7 inspection diagram>

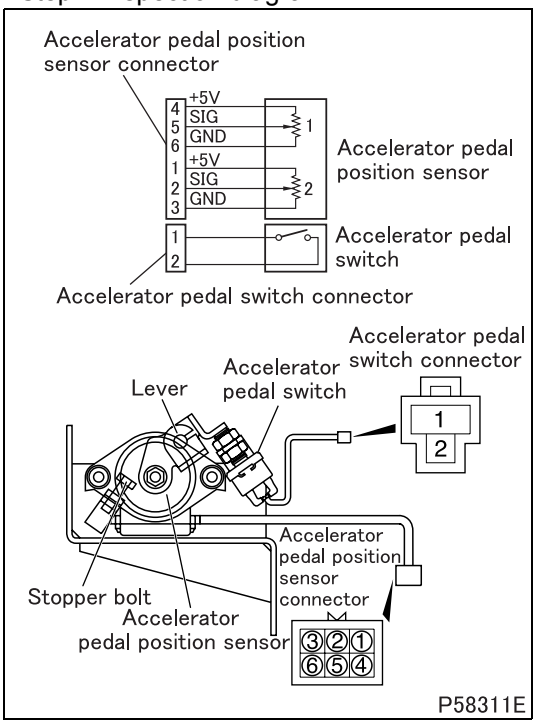

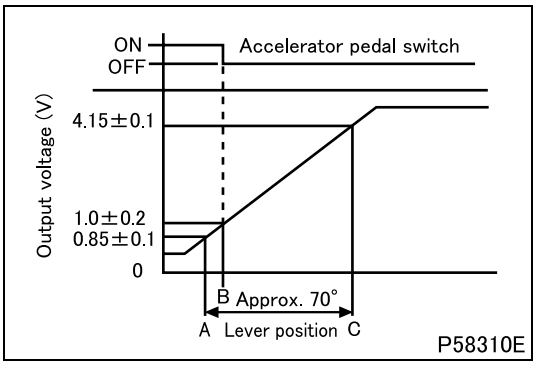

Step 8	Inspection items		Inspection by sensor connector
	Maintenance item		Measure value of voltage between connector terminal No. 4 (+) and 6 (–).
	Inspection condition		• Starter switch: ON • Engine is stopped. • Measure from back side of connector of harness with each device connected to harness.
	Requirements		5 V
	Inspection result (Is the judging standard satisfied?)	YES	Go to step 10.
		NO	Go to step 9.

Step 9	Inspection items		Inspection of harness between electronic control unit and sensor (power supply)
	Maintenance item		Check circuit between electronic control unit connector (GF35B) terminal No. 19 and sensor connector terminal No. 4.
	Inspection condition		Disconnect each device from harness and measure from connection side of harness connector.
	Requirements		There is continuity.
	Inspection result (Is the judging standard satisfied?)	YES	Go to step 12.
		NO	Modify harness.

Step 10	Inspection items		Inspection of harness between electronic control unit and sensor (ground)
	Maintenance item		Check circuit between electronic control unit connector (GF35B) terminal No. 30 and sensor connector terminal No. 6.
	Inspection condition		Disconnect each device from harness and measure from connection side of harness connector.
	Requirements		There is continuity.
	Inspection result (Is the judging standard satisfied?)	YES	Go to step 11.
		NO	Modify harness.

Step 11	Inspection items		Inspection of harness between electronic control unit and sensor (signal)
	Maintenance item		Check circuit between electronic control unit connector (GF34A) terminal No. 24 and sensor connector terminal No. 5.
	Inspection condition		Disconnect each device from harness and measure from connection side of harness connector.
	Requirements		There is continuity.
	Inspection result (Is the judging standard satisfied?)	YES	Go to step 12.
		NO	Modify harness.

Step 12	Inspection items		Inspection by control data
	Maintenance item		**<General Scanning Tool used>** • Measure item “Accelerator Pedal Position 1”. **<Multi-Use Tester used>** • Measure item No. 24 “Accel Pedal Sensor Voltage 1” of Service Data.
	Inspection condition		–
	Requirements		**<General Scanning Tool used>** • Accelerator pedal not pressed: 0% • Accelerator pedal pressed: 100% **<Multi-Use Tester used>** • Accelerator pedal not pressed: 0.85 ± 0.1 V • Accelerator pedal pressed: 4.15 ± 0.1 V
	Inspection result (Is the judging standard satisfied?)	YES	Go to transient fault (See Gr00.).
		NO	Replacement of electronic control unit

[Fault code]
Diagnosis code: P0148/Flash code: 36
[Monitor]
Operation of pressure limiter
[Fault (outline)]
Excessive rail pressure
[Diagnosis check]
- Check is performed for fuel leakage (diagnosis code No. P0093) and excessive rail pressure (higher than specified) to determine rail pressure drop as consequence of pressure limiter activation.

[Code generation condition]
- Fuel leakage and excessive rail pressure are detected.
  (Warning lamp is lit and diagnosis code is displayed on first establishment of code generation condition.)

[Diagnosis check timing]
- When code generation condition is established after starter switch ON

[Diagnostic requirement]
- Starter switch: ON
- Battery voltage: normal

[Control effected by electronic control unit during fault]
- Injection quantity is limited.
- Exhaust gas recirculation control is stopped.
- Throttle control is stopped.
- Diesel particulate filter regeneration (manual or automatic) is stopped.

[Probable cause of trouble]
- Abnormality of supply pump
- Abnormality of pressure limiter
- Airtight abnormality of injector
- Plugged fuel system
- Fuel leakage
- Abnormality of common rail pressure sensor

[Recoverability]
<Control during fault>
- Recovered if signal becomes normal when starter switch is turned OFF to ON (power supply resumed to electronic control unit).

<Warning lamp>
- Extinguished after input of normal signal.

<Fault code>
- If code recovered to normal, automatically cleared at 40th warm up cycle after warning lamp is lit. (To clear as desired, erase from the memory.)

Warm up cycle : “Starter switch ON to start engine till starter switch OFF after coolant temperature increased and engine warmed up” constitutes 1 warm up cycle.

[Fault diagnosis]
- Perform checks in the sequence of the following steps.

Step 1	Inspection items		Inspection by control data
	Maintenance item		Perform actuator test item No. B9 “Fuel Leak Check”.
	Inspection condition		• Vehicle: stationary (vehicle speed 0 km/h {0 MPH}) • Transmission: neutral • Engine start: At idle
	Requirements		There is no fuel leak.
	Inspection result (Is the judging standard satisfied?)	YES	Go to transient fault (see Gr00.).
		NO	Go to step 2.

Step 2	Inspection items		Checking of engine appearance
	Maintenance item		Check fuel system for fuel leak.
	Inspection condition		Starter switch: OFF
	Requirements		There is no fuel leak.
	Inspection result (Is the judging standard satisfied?)	YES	Go to step 3.
		NO	Go to step 6.

Step 3	Inspection items		Inspection of low pressure piping (fuel tank – supply pump)
	Maintenance item		Check suction pipe or hose for blocking.
	Inspection condition		Starter switch: OFF
	Requirements		There is no blocking on pipe or hose.
	Inspection result (Is the judging standard satisfied?)	YES	Go to step 4.
		NO	Correct and replace suction pipe or hose.

Step 4	Inspection items		Checking of air bleeding
	Maintenance item		Bleed air from fuel filter.
	Inspection condition		Starter switch: OFF
	Requirements		Problem is solved by bleeding air.
	Inspection result (Is the judging standard satisfied?)	YES	–
		NO	Go to step 5.

Step 5	Inspection items		Inspection of fuel filter
	Maintenance item		Fuel filter clogged
	Inspection condition		Starter switch: OFF
	Requirements		Problem is solved by replacing fuel filter.
	Inspection result (Is the judging standard satisfied?)	YES	–
		NO	Go to step 6.

Step 6	Inspection items		Inspection by control data
	Maintenance item		Perform actuator test item No. B9 “Fuel Leak Check”.
	Inspection condition		• Vehicle: stationary (vehicle speed 0 km/h {0 MPH}) • Transmission: neutral • Engine start: At idle
	Requirements		There is no leak from supply pump.
	Inspection result (Is the judging standard satisfied?)	YES	Go to step 7.
		NO	Inspection of supply pump (contact DENSO Service Station) or replace.

Step 7	Inspection items		Inspection by control data
	Maintenance item		Perform actuator test item No. B9 “Fuel Leak Check”.
	Inspection condition		• Vehicle: stationary (vehicle speed 0 km/h {0 MPH}) • Transmission: neutral • Engine start: At idle
	Requirements		There is no leak from fuel pipe between supply pump and rail.
	Inspection result (Is the judging standard satisfied?)	YES	Go to step 8.
		NO	Replacement of fuel pipe

Step 8	Inspection items		Inspection by control data
	Maintenance item		Perform actuator test item No. B9 “Fuel Leak Check”.
	Inspection condition		• Vehicle: stationary (vehicle speed 0 km/h {0 MPH}) • Transmission: neutral • Engine start: At idle
	Requirements		There is no leak from rail.
	Inspection result (Is the judging standard satisfied?)	YES	Go to step 9.
		NO	Inspection of rail (contact DENSO Service Station) or replace.

Step 9	Inspection items		Inspection by control data
	Maintenance item		Perform actuator test item No. B9 “Fuel Leak Check”.
	Inspection condition		• Vehicle: stationary (vehicle speed 0 km/h {0 MPH}) • Transmission: neutral • Engine start: At idle
	Requirements		There is no leak from fuel injection pipes (six) between injector and rail.
	Inspection result (Is the judging standard satisfied?)	YES	Go to step 10.
		NO	Replacement of injection pipe

Step 10	Inspection items		Inspection by control data
	Maintenance item		Perform actuator test item No. B9 “Fuel Leak Check”.
	Inspection condition		• Vehicle: statonary (vehicle speed 0 km/h {0 MPH}) • Transmission: neutral • Engine start: At idle
	Requirements		There is no leak from injectors (six).
	Inspection result (Is the judging standard satisfied?)	YES	Go to step 11.
		NO	Inspection of injector (contact DENSO Service Station) or replace.

Step 11	Inspection items		Check inside of combustion chamber.
	Maintenance item		Check for fuel leak.
	Inspection condition		• After performing actuator test item No. B9 “Fuel Leak Check”, stop engine. • Remove glow plug, and check from glow plug mounting hole using bore scope.
	Requirements		Inside of combustion chamber is not wet.
	Inspection result (Is the judging standard satisfied?)	YES	Go to step 12.
		NO	Inspection of injector of object cylinder (contact DENSO Service Station) or replace.

Step 12	Inspection items		Inspection of rail (pressure limiter) (contact DENSO Service Station) or replace.
	Maintenance item		–
	Inspection condition		–
	Requirements		Problem is solved by repairing or replacing rail (pressure limiter).
	Inspection result (Is the judging standard satisfied?)	YES	–
		NO	Replacement of electronic control unit

[Fault code]
Diagnosis code: P0181/Flash code: 41
[Monitor]
Characteristic abnormality of fuel temperature sensor 1 and 2
[Fault (outline)]
Gain and offset drift
[Diagnosis check]
- Output difference between fuel temperature sensors 1 and 2 under given condition is checked to determine if it is within specified range.

[Code generation condition]
- Output difference between fuel temperature sensors 1 and 2 remains out of specified range for approx. 10 seconds.
  (Warning lamp is lit and diagnosis code is displayed on second establishment of code generation condition.)

[Diagnosis check timing]
- When code generation condition is established after starter switch ON

[Diagnostic requirement]
- Engine running time: more than 900 seconds
- Fuel temperature sensor 1: normal in output signal
- Fuel temperature sensor 2: normal in output signal
- Common rail pressure sensor: normal in output signal

[Control effected by electronic control unit during fault]
- Effects no special control.

[Probable cause of trouble]
- Open-circuit or short-circuit of harness between electronic control unit and fuel temperature sensor 1
- Abnormality of each connector
- Abnormality of fuel temperature sensor 1
- Abnormality in electronic control unit

[Recoverability]
<Control during fault>
- Recovered if signal becomes normal with starter switch in ON position.

<Warning lamp>
- Extinguished at 4th driving cycle after normal signal is input.

<Fault code>
- Automatically cleared at 40th warm up cycle after warning lamp is extinguished. (To clear as desired, erase from the memory.)

Driving cycle : “Starter switch ON to start engine till starter switch OFF” constitutes 1 driving cycle.
Warm up cycle : “Starter switch ON to start engine till starter switch OFF after coolant temperature increased and engine warmed up” constitutes 1 warm up cycle.

[Electronic Control Unit Connection Diagram]

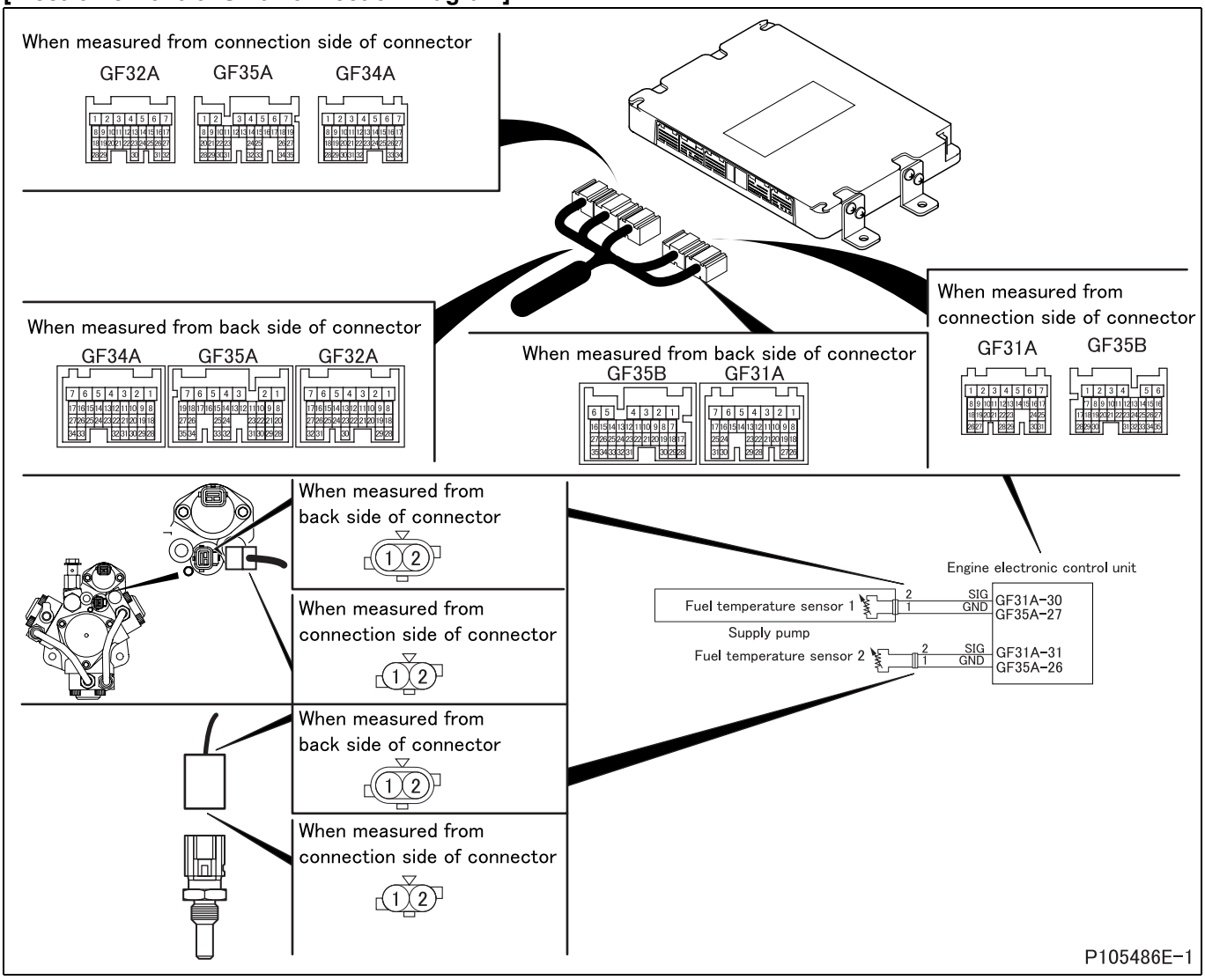

[Parts Identification and Location]

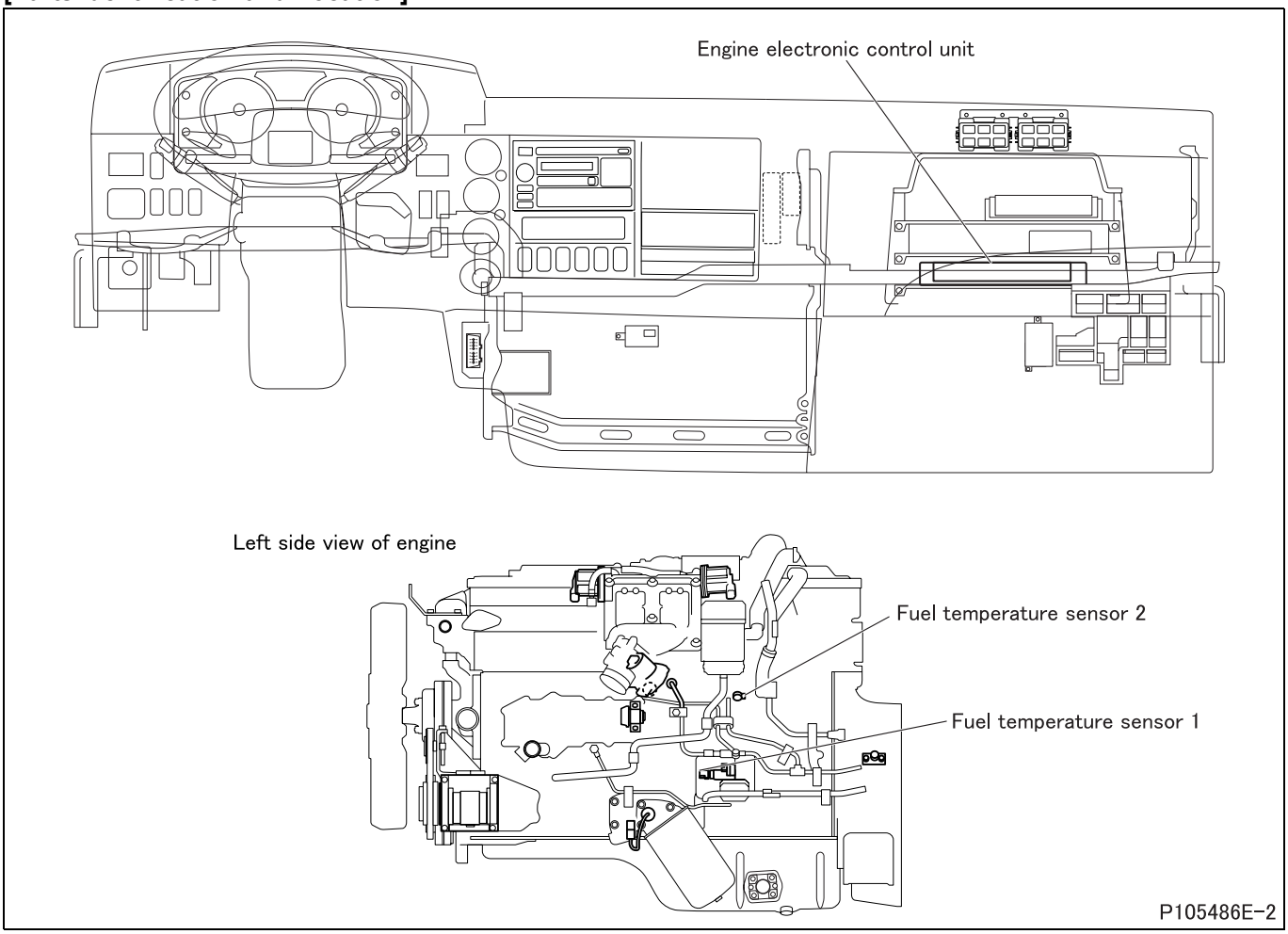

[Fault diagnosis]

- Perform checks in the sequence of the following steps.

Step 1	Inspection items		Inspection by control data
	Maintenance item		Measure item No. 36 “Fuel Temperature (inlet)” of Service Data.
	Inspection condition		–
	Requirements		• When engine is cold: Temperature is equivalent to outside temperature. • While engine is warmed up: Temperature gradually rises up. • When engine is stopped after warm-up: Temperature rise up just after engine stopped, then gradually decline.
	Inspection result (Is the judging standard satisfied?)	YES	Go to step 8.
		NO	Go to step 2.

Step 2	Inspection items		Inspection by electronic control unit connector
	Maintenance item		Measure value of voltage between connector (GF31A) terminal No. 30 and (GF35A) terminal 27.
	Inspection condition		• Measure from back side of connector of harness with each device connected to harness. • Starter switch: ON
	Requirements		• –20°C {–4°F}: 15.0 ± 1.5 kΩ • 20°C {68°F}: 2.45 ± 0.24 kΩ • 80°C {176°F}: 0.318 ± 0.008 kΩ
	Inspection result (Is the judging standard satisfied?)	YES	Go to step 3.
		NO	Go to step 4.

Step 3	Inspection items		Inspection of electronic control unit connector
	Maintenance item		Inspection of connector
	Inspection condition		–
	Requirements		• Connector is properly connected. • No trace of water entry is found. • No corrosion is found in terminal. • Connection to terminal is appropriate.
	Inspection result (Is the judging standard satisfied?)	YES	Go to step 8.
		NO	Modify connector.

Step 4	Inspection items		Inspection of sensor connector
	Maintenance item		Inspection of connector
	Inspection condition		–
	Requirements		• Connector is properly connected. • No trace of water entry is found. • No corrosion is found in terminal. • Connection to terminal is appropriate.
	Inspection result (Is the judging standard satisfied?)	YES	Go to step 5.
		NO	Modify connector.

Step 5	Inspection items		Inspection of fuel temperature sensor 1 unit
	Maintenance item		Measure value of resistance between connector terminal No. 1 and 2.
	Inspection condition		Put sensor in vessel filled with engine oil.
	Requirements		• –20°C {–4°F}: 15.0 ± 1.5 kΩ • 20°C {68°F}: 2.45 ± 0.24 kΩ • 80°C {176°F}: 0.318 ± 0.008 kΩ
	Inspection result (Is the judging standard satisfied?)	YES	Go to step 6.
		NO	Replacement of sensor

<Step 5 inspection diagram>

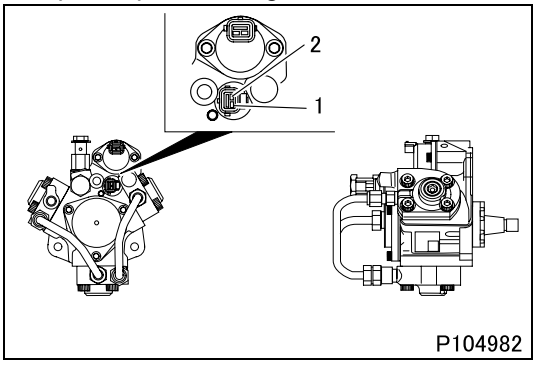

Step 6	Inspection items		Inspection of harness between electronic control unit and sensor (power supply)
	Maintenance item		Check circuit between sensor connector terminal No. 2 and electronic control unit connector (GF31A) terminal No. 30.
	Inspection condition		Disconnect each device from harness and measure from connection side of harness connector.
	Requirements		There is continuity.
	Inspection result (Is the judging standard satisfied?)	YES	Go to step 7.
		NO	Modify harness.

Step 7	Inspection items		Inspection of harness between electronic control unit and sensor (ground)
	Maintenance item		Check circuit between sensor connector terminal No. 1 and electronic control unit connector (GF35A) terminal No. 27.
	Inspection condition		Disconnect each device from harness and measure from connection side of harness connector.
	Requirements		There is continuity.
	Inspection result (Is the judging standard satisfied?)	YES	Go to step 8.
		NO	Modify harness.

Step 8	Inspection items		Inspection by control data
	Maintenance item		Measure item No. 37 “Fuel Temperature (leak)” of Service Data.
	Inspection condition		–
	Requirements		• When engine is cold: Temperature is equivalent to outside temperature. • While engine is warmed up: Temperature gradually rises up. • When engine is stopped after warm-up: Temperature rise up just after engine stopped, then gradually decline.
	Inspection result (Is the judging standard satisfied?)	YES	Go to transient fault (See Gr00.).
		NO	Go to step 9.

Step 9	Inspection items		Inspection by electronic control unit connector
	Maintenance item		Measure value of voltage between connector (GF31A) terminal No. 31 and (GF35A) terminal 26.
	Inspection condition		• Measure from back side of connector of harness with each device connected to harness. • Starter switch: ON
	Requirements		• 20°C {68°F}: 2.45 $^{+0.14}_{-0.13}$ kΩ • 80°C {176°F}: 0.318 ± 0.008 kΩ • 110°C {230°F}: 0.1417 ± 0.0018 kΩ
	Inspection result (Is the judging standard satisfied?)	YES	Go to step 10.
		NO	Go to step 11.

Step 10	Inspection items		Inspection of electronic control unit connector
	Maintenance item		Inspection of connector
	Inspection condition		–
	Requirements		• Connector is properly connected. • No trace of water entry is found. • No corrosion is found in terminal. • Connection to terminal is appropriate.
	Inspection result (Is the judging standard satisfied?)	YES	Go to step 15.
		NO	Modify connector.

Step 11	Inspection items		Inspection of sensor connector
	Maintenance item		Inspection of connector
	Inspection condition		–
	Requirements		• Connector is properly connected. • No trace of water entry is found. • No corrosion is found in terminal. • Connection to terminal is appropriate.
	Inspection result (Is the judging standard satisfied?)	YES	Go to step 12.
		NO	Modify connector.

Step 12	Inspection items		Inspection of fuel temperature sensor 2 unit
	Maintenance item		Measure value of resistance between connector terminal No. 1 and 2.
	Inspection condition		Put sensor in vessel filled with engine oil.
	Requirements		• 20°C {68°F}: 2.45 $^{+0.14}_{-0.13}$ kΩ • 80°C {176°F}: 0.318 ± 0.008 kΩ • 110°C {230°F}: 0.1417 ± 0.0018 kΩ
	Inspection result (Is the judging standard satisfied?)	YES	Go to step 13.
		NO	Replacement of sensor

<Step 12 inspection diagram>

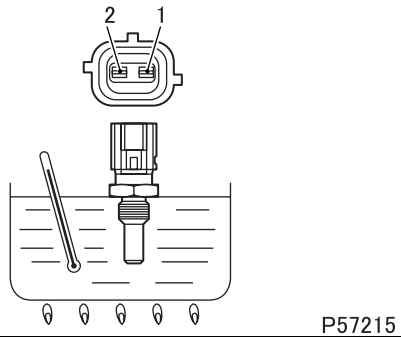

Step 13	Inspection items		Inspection of harness between electronic control unit and sensor (power supply)
	Maintenance item		Check circuit between sensor connector terminal No. 2 and electronic control unit connector (GF31A) terminal No. 31.
	Inspection condition		Disconnect each device from harness and measure from connection side of harness connector.
	Requirements		There is continuity.
	Inspection result (Is the judging standard satisfied?)	YES	Go to step 14.
		NO	Modify harness.

Step 14	Inspection items		Inspection of harness between electronic control unit and sensor (ground)
	Maintenance item		Check circuit between sensor connector terminal No. 1 and electronic control unit connector (GF35A) terminal No. 26.
	Inspection condition		Disconnect each device from harness and measure from connection side of harness connector.
	Requirements		There is continuity.
	Inspection result (Is the judging standard satisfied?)	YES	Go to step 15.
		NO	Modify harness.

Step 15	Inspection items		Inspection by control data
	Maintenance item		Measure item No. 37 “Fuel Temperature (leak)” of Service Data.
	Inspection condition		–
	Requirements		• When engine is cold: Temperature is equivalent to outside temperature. • While engine is warmed up: Temperature gradually rises up. • When engine is stopped after warm-up: Temperature rise up just after engine stopped, then gradually decline.
	Inspection result (Is the judging standard satisfied?)	YES	Go to transient fault (See Gr00.).
		NO	Replacement of electronic control unit

[Fault code]
Diagnosis code: P0182/Flash code: 41
[Monitor]
Abnormality of fuel temperature sensor 1
[Fault (outline)]
Low signal range check
[Diagnosis check]
- Output voltage of fuel temperature sensor 1 is monitored.

[Code generation condition]
- Voltage of fuel temperature sensor 1 remains below 0.1 V for approx. 2.5 seconds.
  (Warning lamp is lit and diagnosis code is displayed on second establishment of code generation condition.)

[Diagnosis check timing]
- When code generation condition is established after starter switch ON

[Diagnostic requirement]
- 2 seconds passed after starter switch ON
- 2 seconds passed after cranking
- Battery voltage: normal

[Control effected by electronic control unit during fault]
- Fuel temperature is fixed at 40°C {104°F}.

[Probable cause of trouble]
- Open-circuit or short-circuit of harness between electronic control unit and fuel temperature sensor 1
- Abnormality of each connector
- Abnormality of fuel temperature sensor 1
- Abnormality in electronic control unit

[Recoverability]
<Control during fault>
- Recovered if signal becomes normal with starter switch in ON position.

<Warning lamp>
- Extinguished at 4th driving cycle after normal signal is input.

<Fault code>
- Automatically cleared at 40th warm up cycle after warning lamp is extinguished. (To clear as desired, erase from the memory.)

Driving cycle : “Starter switch ON to start engine till starter switch OFF” constitutes 1 driving cycle.
Warm up cycle : “Starter switch ON to start engine till starter switch OFF after coolant temperature increased and engine warmed up” constitutes 1 warm up cycle.

[Electronic Control Unit Connection Diagram]

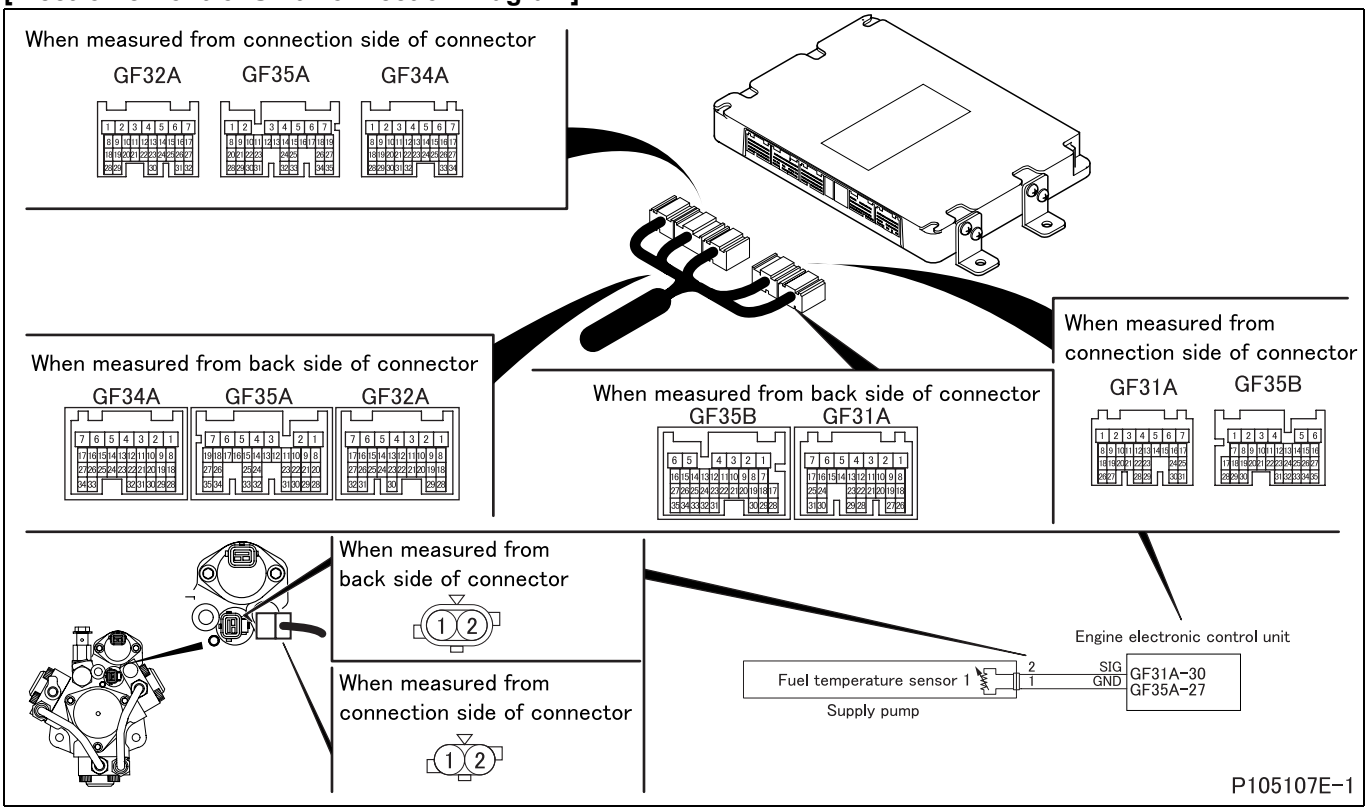

[Parts Identification and Location]

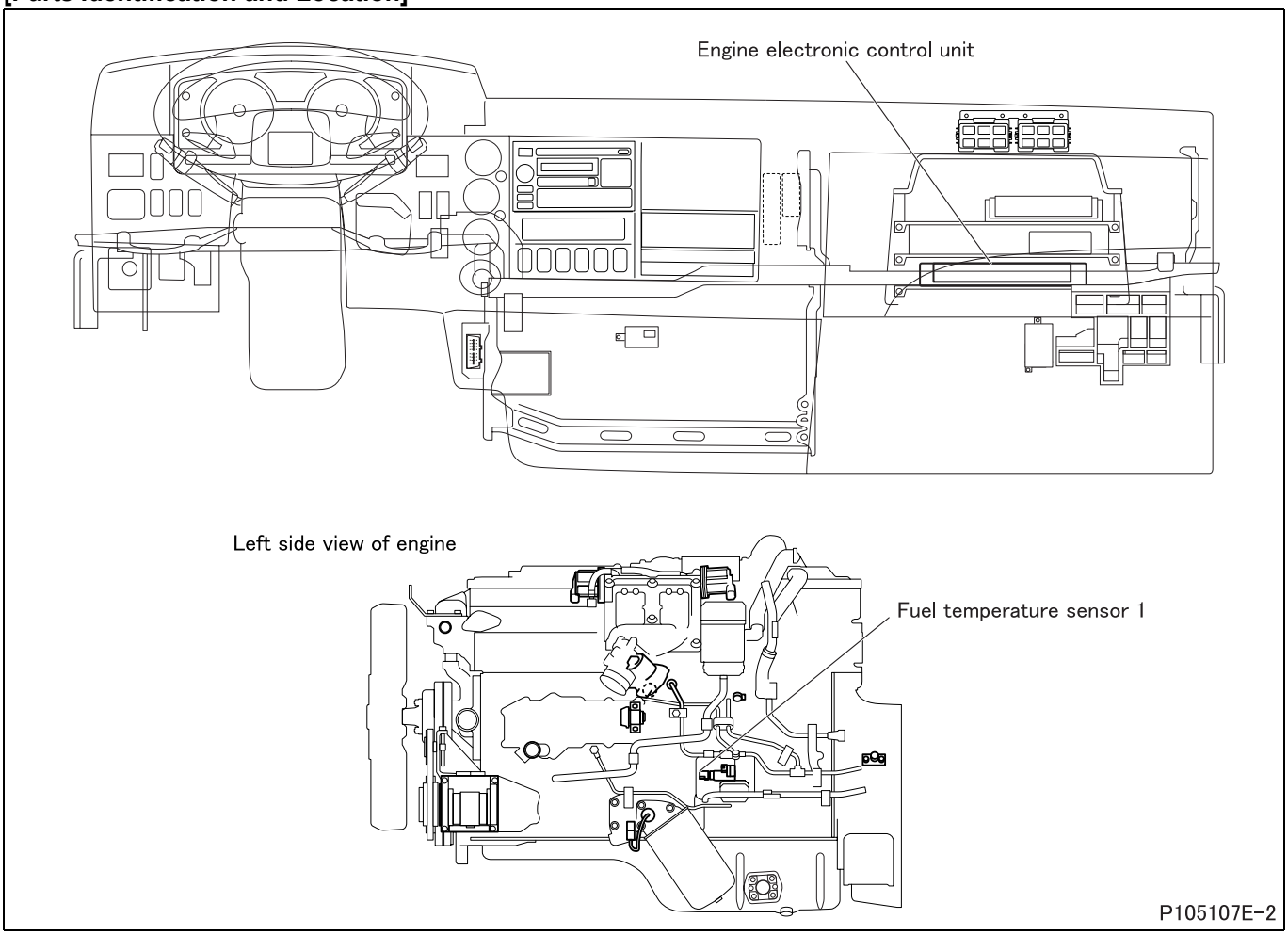

[Fault diagnosis]

- Perform checks in the sequence of the following steps.

Step 1	Inspection items		Inspection by control data
	Maintenance item		Measure item No. 36 “Fuel Temperature (inlet)” of Service Data.
	Inspection condition		–
	Requirements		• When engine is cold: Temperature is equivalent to outside temperature. • While engine is warmed up: Temperature gradually rises up. • When engine is stopped after warm-up: Temperature rise up just after engine stopped, then gradually decline.
	Inspection result (Is the judging standard satisfied?)	YES	Go to transient fault (See Gr00.).
		NO	Go to step 2.

Step 2	Inspection items		Inspection by electronic control unit connector
	Maintenance item		Measure value of voltage between connector (GF31A) terminal No. 30 and (GF35A) terminal 27.
	Inspection condition		• Measure from back side of connector of harness with each device connected to harness. • Starter switch: ON
	Requirements		• –20°C {–4°F}: 15.0 ± 1.5 kΩ • 20°C {68°F}: 2.45 ± 0.24 kΩ • 80°C {176°F}: 0.318 ± 0.008 kΩ
	Inspection result (Is the judging standard satisfied?)	YES	Go to step 3.
		NO	Go to step 4.

Step 3	Inspection items		Inspection of electronic control unit connector
	Maintenance item		Inspection of connector
	Inspection condition		–
	Requirements		• Connector is properly connected. • No trace of water entry is found. • No corrosion is found in terminal. • Connection to terminal is appropriate.
	Inspection result (Is the judging standard satisfied?)	YES	Go to step 8.
		NO	Modify connector.

Step 4	Inspection items		Inspection of sensor connector
	Maintenance item		Inspection of connector
	Inspection condition		–
	Requirements		• Connector is properly connected. • No trace of water entry is found. • No corrosion is found in terminal. • Connection to terminal is appropriate.
	Inspection result (Is the judging standard satisfied?)	YES	Go to step 5.
		NO	Modify connector.

Step 5	Inspection items		Inspection of fuel temperature sensor 1 unit
	Maintenance item		Measure value of resistance between connector terminal No. 1 and 2.
	Inspection condition		Put sensor in vessel filled with engine oil.
	Requirements		• –20°C {–4°F}: 15.0 ± 1.5 kΩ • 20°C {68°F}: 2.45 ± 0.24 kΩ • 80°C {176°F}: 0.318 ± 0.008 kΩ
	Inspection result (Is the judging standard satisfied?)	YES	Go to step 6.
		NO	Replacement of sensor

<Step 5 inspection diagram>

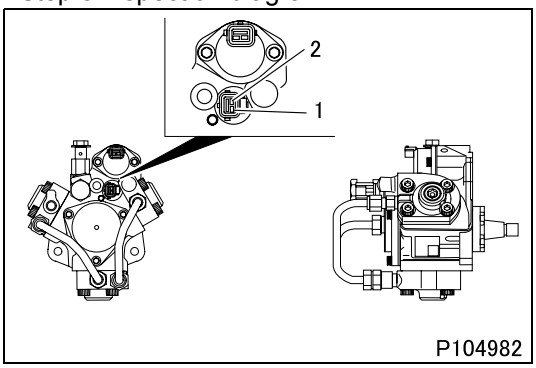

Step 6	Inspection items		Inspection of harness between electronic control unit and sensor (power supply)
	Maintenance item		Check circuit between sensor connector terminal No. 2 and electronic control unit connector (GF31A) terminal No. 30.
	Inspection condition		Disconnect each device from harness and measure from connection side of harness connector.
	Requirements		There is continuity.
	Inspection result (Is the judging standard satisfied?)	YES	Go to step 7.
		NO	Modify harness.

Step 7	Inspection items		Inspection of harness between electronic control unit and sensor (ground)
	Maintenance item		Check circuit between sensor connector terminal No. 1 and electronic control unit connector (GF35A) terminal No. 27.
	Inspection condition		Disconnect each device from harness and measure from connection side of harness connector.
	Requirements		There is continuity.
	Inspection result (Is the judging standard satisfied?)	YES	Go to step 8.
		NO	Modify harness.

Step 8	Inspection items		Inspection by control data
	Maintenance item		Measure item No. 36 “Fuel Temperature (inlet)” of Service Data.
	Inspection condition		–
	Requirements		• When engine is cold: Temperature is equivalent to outside temperature. • While engine is warmed up: Temperature gradually rises up. • When engine is stopped after warm-up: Temperature rise up just after engine stopped, then gradually decline.
	Inspection result (Is the judging standard satisfied?)	YES	Go to transient fault (See Gr00.).
		NO	Replacement of electronic control unit

[Fault code]
Diagnosis code: P0183/Flash code: 41
[Monitor]
Abnormality of fuel temperature sensor 1
[Fault (outline)]
High signal range check
[Diagnosis check]
- Output voltage of fuel temperature sensor 1 is monitored.

[Code generation condition]
- Voltage of fuel temperature sensor 1 remains over 4.8 V for approx. 2.5 seconds.
  (Warning lamp is lit and diagnosis code is displayed on second establishment of code generation condition.)

[Diagnosis check timing]
- When code generation condition is established after starter switch ON

[Diagnostic requirement]
- 2 seconds passed after starter switch ON
- 2 seconds passed after cranking
- Battery voltage: normal

[Control effected by electronic control unit during fault]
- Fuel temperature is fixed at 40°C {104°F}.

[Probable cause of trouble]
- Open-circuit or short-circuit of harness between electronic control unit and fuel temperature sensor 1
- Abnormality of each connector
- Abnormality of fuel temperature sensor 1
- Abnormality in electronic control unit

[Recoverability]
<Control during fault>
- Recovered if signal becomes normal with starter switch in ON position.

<Warning lamp>
- Extinguished at 4th driving cycle after normal signal is input.

<Fault code>
- Automatically cleared at 40th warm up cycle after warning lamp is extinguished. (To clear as desired, erase from the memory.)

Driving cycle : “Starter switch ON to start engine till starter switch OFF” constitutes 1 driving cycle.
Warm up cycle : “Starter switch ON to start engine till starter switch OFF after coolant temperature increased and engine warmed up” constitutes 1 warm up cycle.

[Electronic Control Unit Connection Diagram]

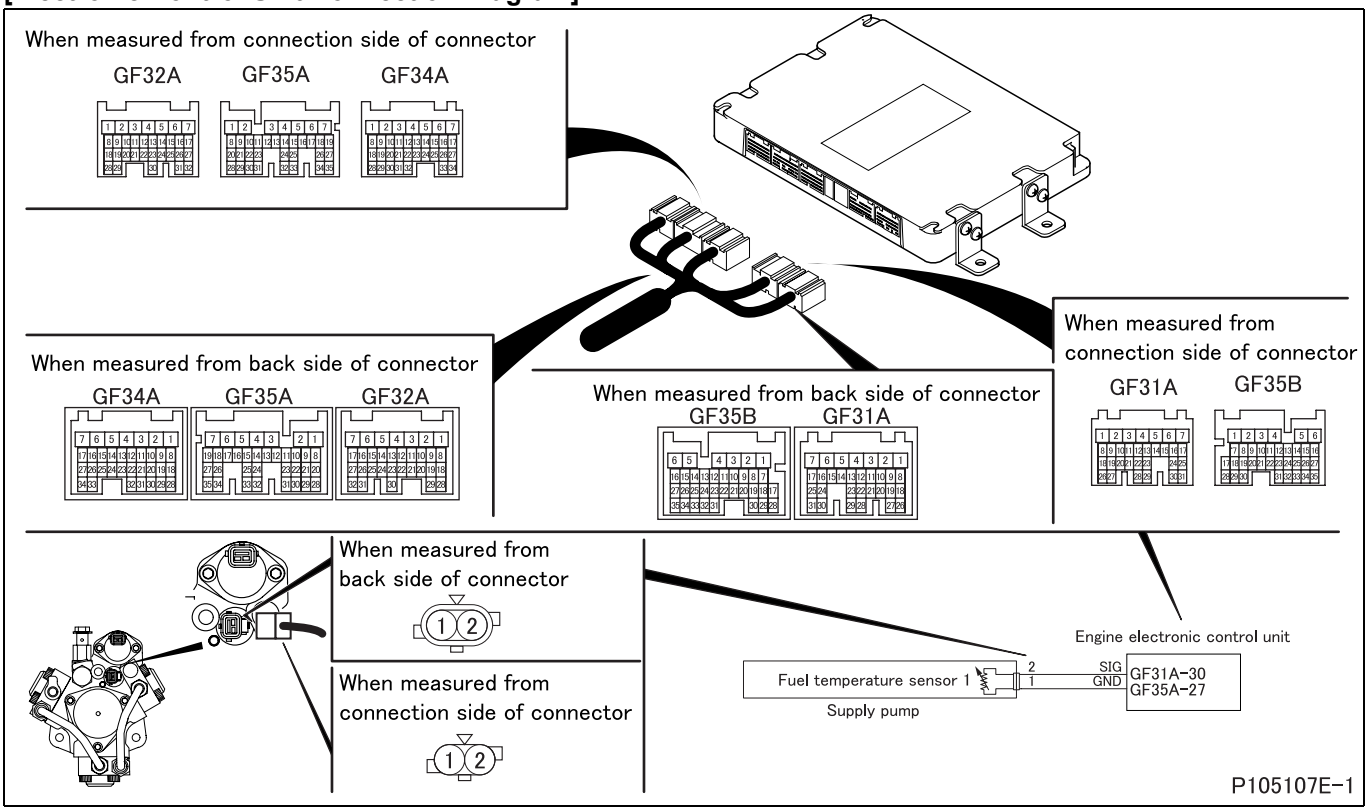

[Parts Identification and Location]

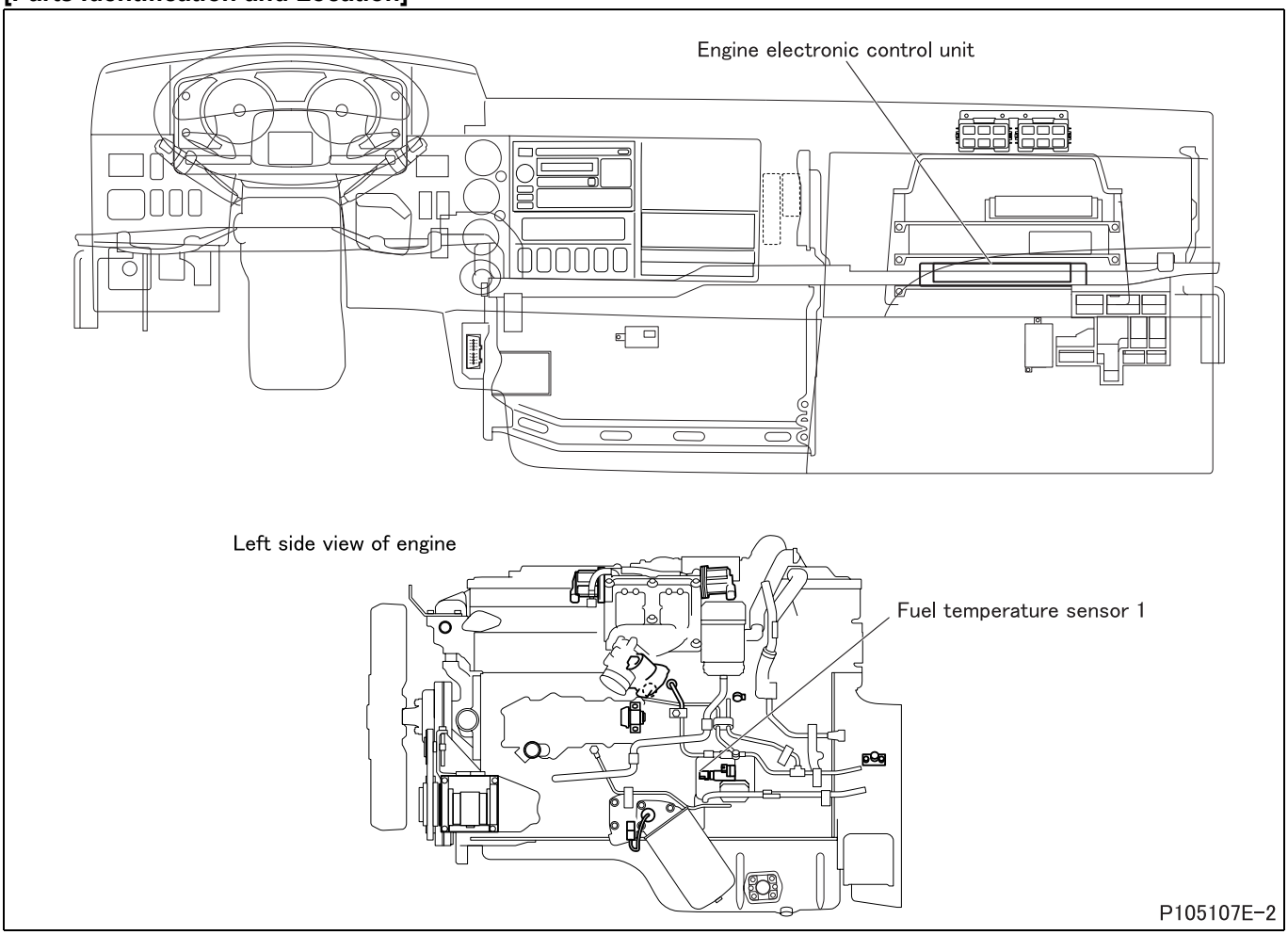

[Fault diagnosis]

- Perform checks in the sequence of the following steps.

Step 1	Inspection items		Inspection by control data
	Maintenance item		Measure item No. 36 “Fuel Temperature (inlet)” of Service Data.
	Inspection condition		–
	Requirements		• When engine is cold: Temperature is equivalent to outside temperature. • While engine is warmed up: Temperature gradually rises up. • When engine is stopped after warm-up: Temperature rise up just after engine stopped, then gradually decline.
	Inspection result (Is the judging standard satisfied?)	YES	Go to transient fault (See Gr00.).
		NO	Go to step 2.

Step 2	Inspection items		Inspection by electronic control unit connector
	Maintenance item		Measure value of voltage between connector (GF31A) terminal No. 30 and (GF35A) terminal 27.
	Inspection condition		• Measure from back side of connector of harness with each device connected to harness. • Starter switch: ON
	Requirements		• –20°C {–4°F}: 15.0 ± 1.5 kΩ • 20°C {68°F}: 2.45 ± 0.24 kΩ • 80°C {176°F}: 0.318 ± 0.008 kΩ
	Inspection result (Is the judging standard satisfied?)	YES	Go to step 3.
		NO	Go to step 4.

Step 3	Inspection items		Inspection of electronic control unit connector
	Maintenance item		Inspection of connector
	Inspection condition		–
	Requirements		• Connector is properly connected. • No trace of water entry is found. • No corrosion is found in terminal. • Connection to terminal is appropriate.
	Inspection result (Is the judging standard satisfied?)	YES	Go to step 8.
		NO	Modify connector.

Step 4	Inspection items		Inspection of sensor connector
	Maintenance item		Inspection of connector
	Inspection condition		–
	Requirements		• Connector is properly connected. • No trace of water entry is found. • No corrosion is found in terminal. • Connection to terminal is appropriate.
	Inspection result (Is the judging standard satisfied?)	YES	Go to step 5.
		NO	Modify connector.

Step 5	Inspection items		Inspection of fuel temperature sensor 1 unit
	Maintenance item		Measure value of resistance between connector terminal No. 1 and 2.
	Inspection condition		Put sensor in vessel filled with engine oil.
	Requirements		• –20°C {–4°F}: 15.0 ± 1.5 kΩ • 20°C {68°F}: 2.45 ± 0.24 kΩ • 80°C {176°F}: 0.318 ± 0.008 kΩ
	Inspection result (Is the judging standard satisfied?)	YES	Go to step 6.
		NO	Replacement of sensor

<Step 5 inspection diagram>

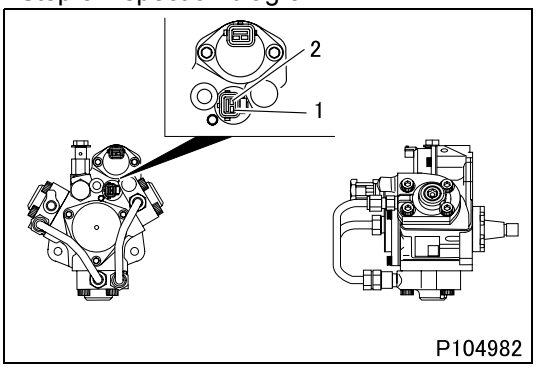

Step 6	Inspection items		Inspection of harness between electronic control unit and sensor (power supply)
	Maintenance item		Check circuit between sensor connector terminal No. 2 and electronic control unit connector (GF31A) terminal No. 30.
	Inspection condition		Disconnect each device from harness and measure from connection side of harness connector.
	Requirements		There is continuity.
	Inspection result (Is the judging standard satisfied?)	YES	Go to step 7.
		NO	Modify harness.

Step 7	Inspection items		Inspection of harness between electronic control unit and sensor (ground)
	Maintenance item		Check circuit between sensor connector terminal No. 1 and electronic control unit connector (GF35A) terminal No. 27.
	Inspection condition		Disconnect each device from harness and measure from connection side of harness connector.
	Requirements		There is continuity.
	Inspection result (Is the judging standard satisfied?)	YES	Go to step 8.
		NO	Modify harness.

Step 8	Inspection items		Inspection by control data
	Maintenance item		Measure item No. 36 “Fuel Temperature (inlet)” of Service Data.
	Inspection condition		–
	Requirements		• When engine is cold: Temperature is equivalent to outside temperature. • While engine is warmed up: Temperature gradually rises up. • When engine is stopped after warm-up: Temperature rise up just after engine stopped, then gradually decline.
	Inspection result (Is the judging standard satisfied?)	YES	Go to transient fault (See Gr00.).
		NO	Replacement of electronic control unit

[Fault code]
Diagnosis code: P0187/Flash code: 56
[Monitor]
Abnormality of fuel temperature sensor 2
[Fault (outline)]
Low signal range check
[Diagnosis check]
- Output voltage of fuel temperature sensor 2 is monitored.

[Code generation condition]
- Voltage of fuel temperature sensor 2 remains below 0.1 V for approx. 2.5 seconds.
  (Warning lamp is lit and diagnosis code is displayed on second establishment of code generation condition.)

[Diagnosis check timing]
- When code generation condition is established after starter switch ON

[Diagnostic requirement]
- 2 seconds passed after starter switch ON
- 2 seconds passed after cranking
- Battery voltage: normal

[Control effected by electronic control unit during fault]
- Fuel temperature is fixed at 40°C {104°F} at engine start and 80°C {176°F} when engine is running.

[Probable cause of trouble]
- Open-circuit or short-circuit of harness between electronic control unit and fuel temperature sensor 2
- Abnormality of each connector
- Abnormality of fuel temperature sensor 2
- Abnormality in electronic control unit

[Recoverability]
<Control during fault>
- Recovered if signal becomes normal with starter switch in ON position.

<Warning lamp>
- Extinguished at 4th driving cycle after normal signal is input.

<Fault code>
- Automatically cleared at 40th warm up cycle after warning lamp is extinguished. (To clear as desired, erase from the memory.)

Driving cycle : “Starter switch ON to start engine till starter switch OFF” constitutes 1 driving cycle.
Warm up cycle : “Starter switch ON to start engine till starter switch OFF after coolant temperature increased and engine warmed up” constitutes 1 warm up cycle.

[Electronic Control Unit Connection Diagram]

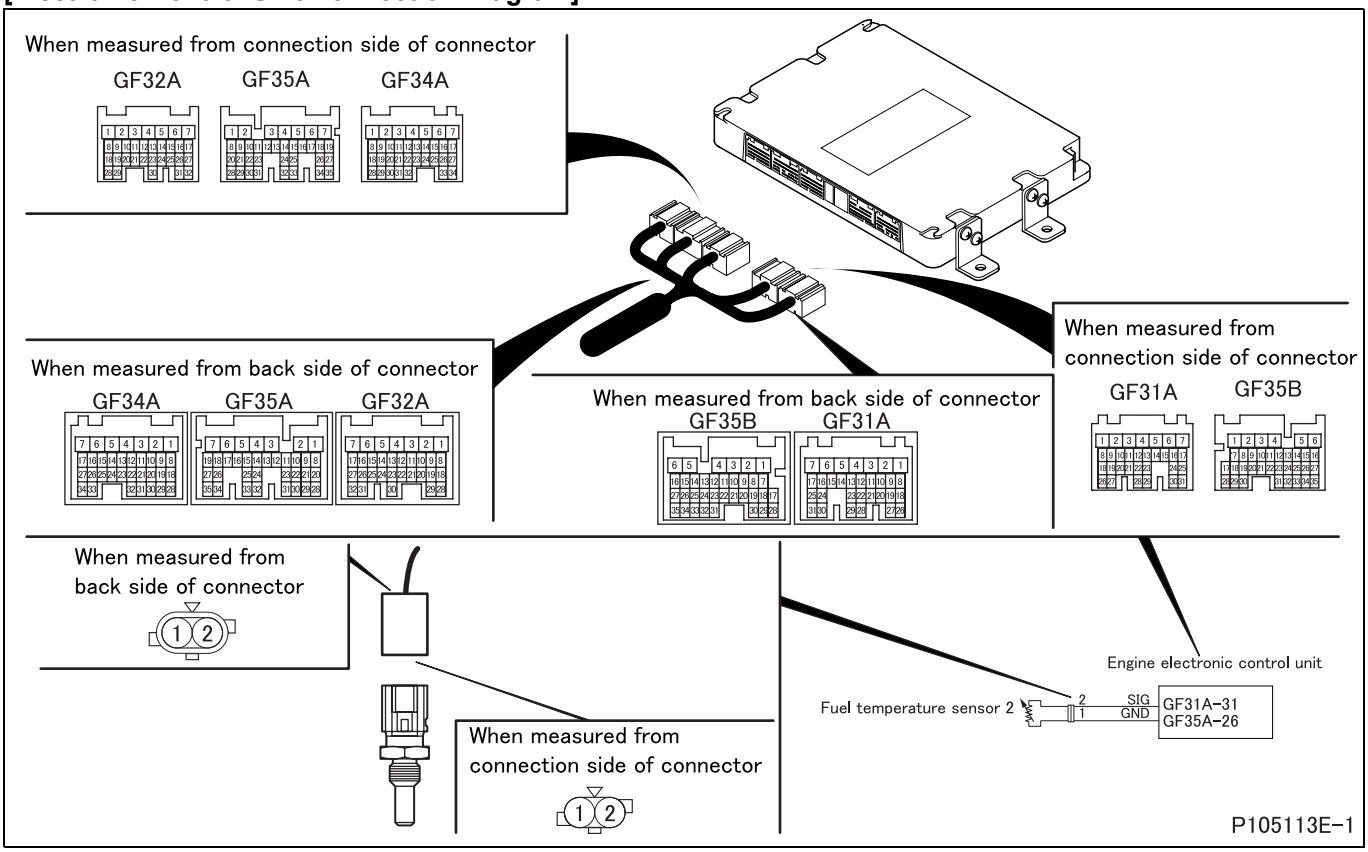

[Parts Identification and Location]

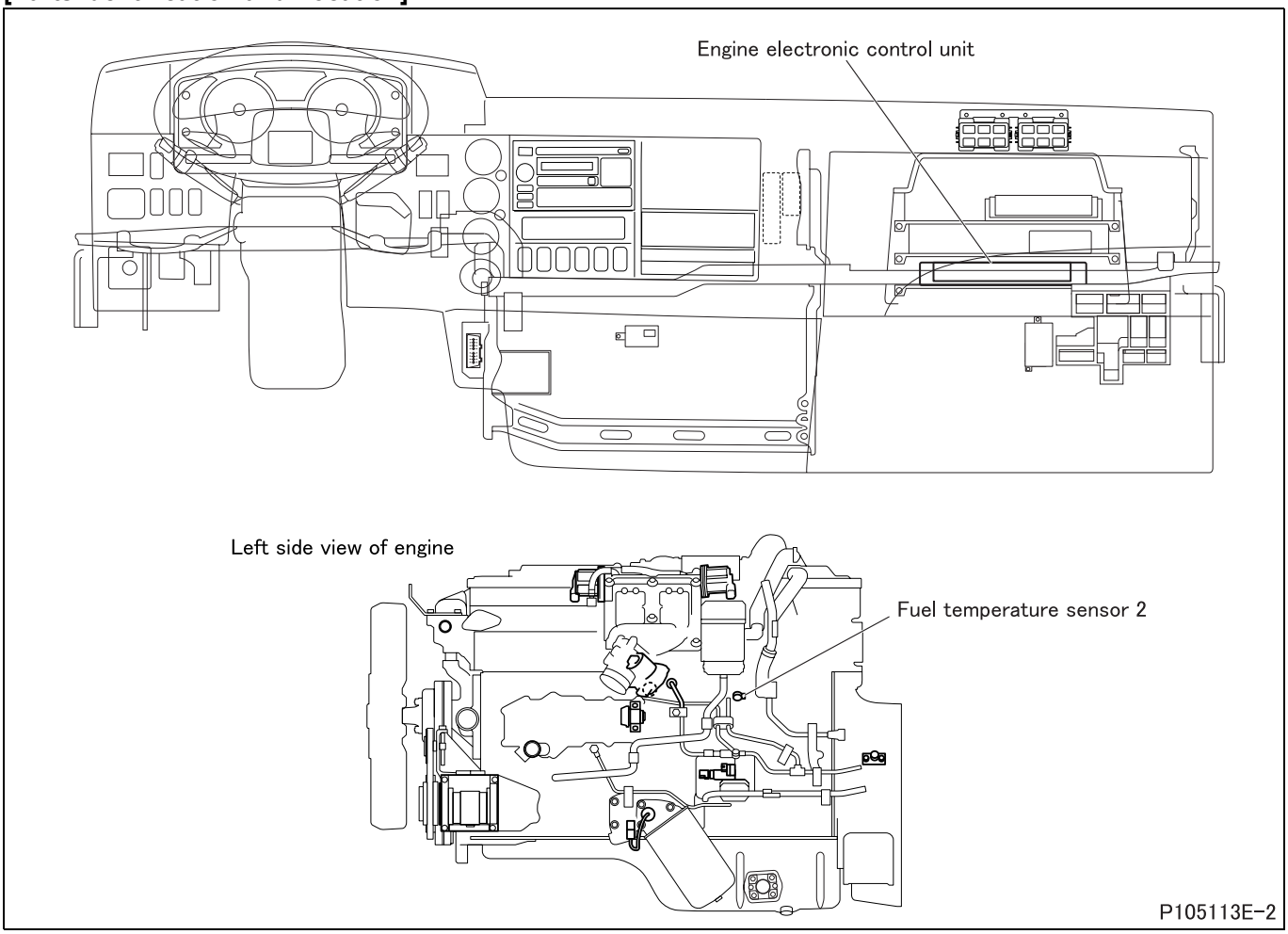

[Fault diagnosis]

- Perform checks in the sequence of the following steps.

Step 1	Inspection items		Inspection by control data
	Maintenance item		Measure item No. 37 “Fuel Temperature (leak)” of Service Data.
	Inspection condition		–
	Requirements		• When engine is cold: Temperature is equivalent to outside temperature. • While engine is warmed up: Temperature gradually rises up. • When engine is stopped after warm-up: Temperature rise up just after engine stopped, then gradually decline.
	Inspection result (Is the judging standard satisfied?)	YES	Go to transient fault (See Gr00.).
		NO	Go to step 2.

Step 2	Inspection items		Inspection by electronic control unit connector
	Maintenance item		Measure value of voltage between connector (GF31A) terminal No. 31 and (GF35A) terminal 26.
	Inspection condition		• Measure from back side of connector of harness with each device connected to harness. • Starter switch: ON
	Requirements		• 20°C {68°F}: 2.45 $^{+0.14}_{-0.13}$ kΩ • 80°C {176°F}: 0.318 ± 0.008 kΩ • 110°C {230°F}: 0.1417 ± 0.0018 kΩ
	Inspection result (Is the judging standard satisfied?)	YES	Go to step 3.
		NO	Go to step 4.

Step 3	Inspection items		Inspection of electronic control unit connector
	Maintenance item		Inspection of connector
	Inspection condition		–
	Requirements		• Connector is properly connected. • No trace of water entry is found. • No corrosion is found in terminal. • Connection to terminal is appropriate.
	Inspection result (Is the judging standard satisfied?)	YES	Go to step 8.
		NO	Modify connector.

Step 4	Inspection items		Inspection of sensor connector
	Maintenance item		Inspection of connector
	Inspection condition		–
	Requirements		• Connector is properly connected. • No trace of water entry is found. • No corrosion is found in terminal. • Connection to terminal is appropriate.
	Inspection result (Is the judging standard satisfied?)	YES	Go to step 5.
		NO	Modify connector.

Step 5	Inspection items		Inspection of fuel temperature sensor 2 unit
	Maintenance item		Measure value of resistance between connector terminal No. 1 and 2.
	Inspection condition		Put sensor in vessel filled with engine oil.
	Requirements		• 20°C {68°F}: 2.45 $^{+0.14}_{-0.13}$ kΩ • 80°C {176°F}: 0.318 ± 0.008 kΩ • 110°C {230°F}: 0.1417 ± 0.0018 kΩ
	Inspection result (Is the judging standard satisfied?)	YES	Go to step 6.
		NO	Replacement of sensor

<Step 5 inspection diagram>

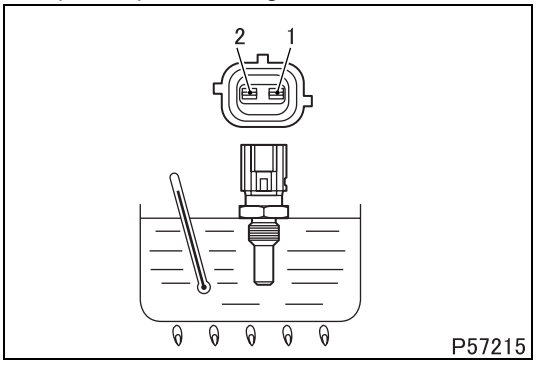

Step 6	Inspection items		Inspection of harness between electronic control unit and sensor (power supply)
	Maintenance item		Check circuit between sensor connector terminal No. 2 and electronic control unit connector (GF31A) terminal No. 31.
	Inspection condition		Disconnect each device from harness and measure from connection side of harness connector.
	Requirements		There is continuity.
	Inspection result (Is the judging standard satisfied?)	YES	Go to step 7.
		NO	Modify harness.

Step 7	Inspection items		Inspection of harness between electronic control unit and sensor (ground)
	Maintenance item		Check circuit between sensor connector terminal No. 1 and electronic control unit connector (GF35A) terminal No. 26.
	Inspection condition		Disconnect each device from harness and measure from connection side of harness connector.
	Requirements		There is continuity.
	Inspection result (Is the judging standard satisfied?)	YES	Go to step 8.
		NO	Modify harness.

Step 8	Inspection items		Inspection by control data
	Maintenance item		Measure item No. 37 “Fuel Temperature (leak)” of Service Data.
	Inspection condition		–
	Requirements		• When engine is cold: Temperature is equivalent to outside temperature. • While engine is warmed up: Temperature gradually rises up. • When engine is stopped after warm-up: Temperature rise up just after engine stopped, then gradually decline.
	Inspection result (Is the judging standard satisfied?)	YES	Go to transient fault (See Gr00.).
		NO	Replacement of electronic control unit

[Fault code]
Diagnosis code: P0188/Flash code: 56
[Monitor]
Abnormality of fuel temperature sensor 2
[Fault (outline)]
High signal range check
[Diagnosis check]
- Output voltage of fuel temperature sensor 2 is monitored.

[Code generation condition]
- Voltage of fuel temperature sensor 2 remains over 4.8 V for approx. 2.5 seconds.
  (Warning lamp is lit and diagnosis code is displayed on second establishment of code generation condition.)

[Diagnosis check timing]
- When code generation condition is established after starter switch ON

[Diagnostic requirement]
- 2 seconds passed after starter switch ON
- 2 seconds passed after cranking
- Battery voltage: normal

[Control effected by electronic control unit during fault]
- Fuel temperature is fixed at 40°C {104°F} at engine start and 80°C {176°F} when engine is running.

[Probable cause of trouble]
- Open-circuit or short-circuit of harness between electronic control unit and fuel temperature sensor 2
- Abnormality of each connector
- Abnormality of fuel temperature sensor 2
- Abnormality in electronic control unit

[Recoverability]
<Control during fault>
- Recovered if signal becomes normal with starter switch in ON position.

<Warning lamp>
- Extinguished at 4th driving cycle after normal signal is input.

<Fault code>
- Automatically cleared at 40th warm up cycle after warning lamp is extinguished. (To clear as desired, erase from the memory.)

Driving cycle : “Starter switch ON to start engine till starter switch OFF” constitutes 1 driving cycle.
Warm up cycle : “Starter switch ON to start engine till starter switch OFF after coolant temperature increased and engine warmed up” constitutes 1 warm up cycle.

[Electronic Control Unit Connection Diagram]

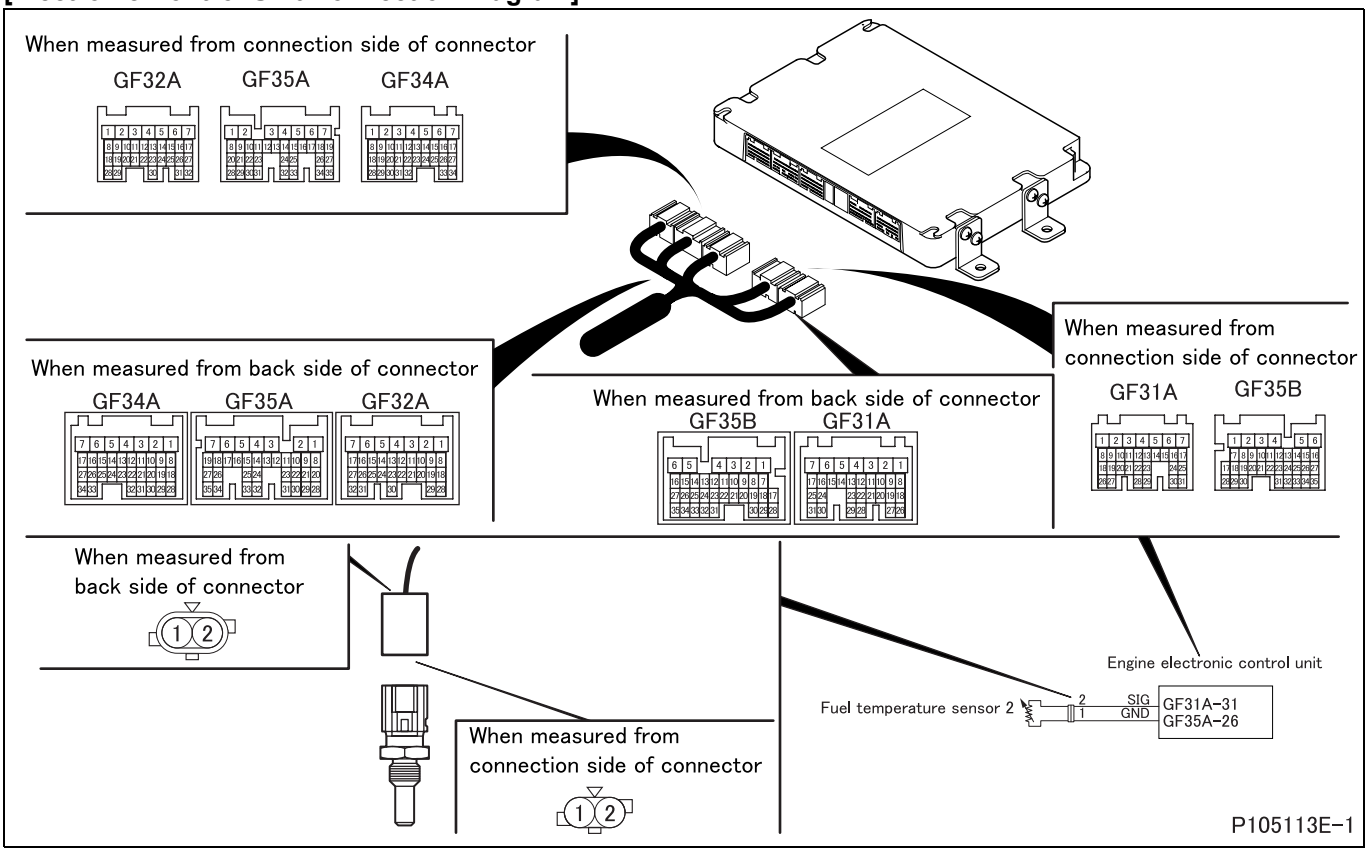

[Parts Identification and Location]

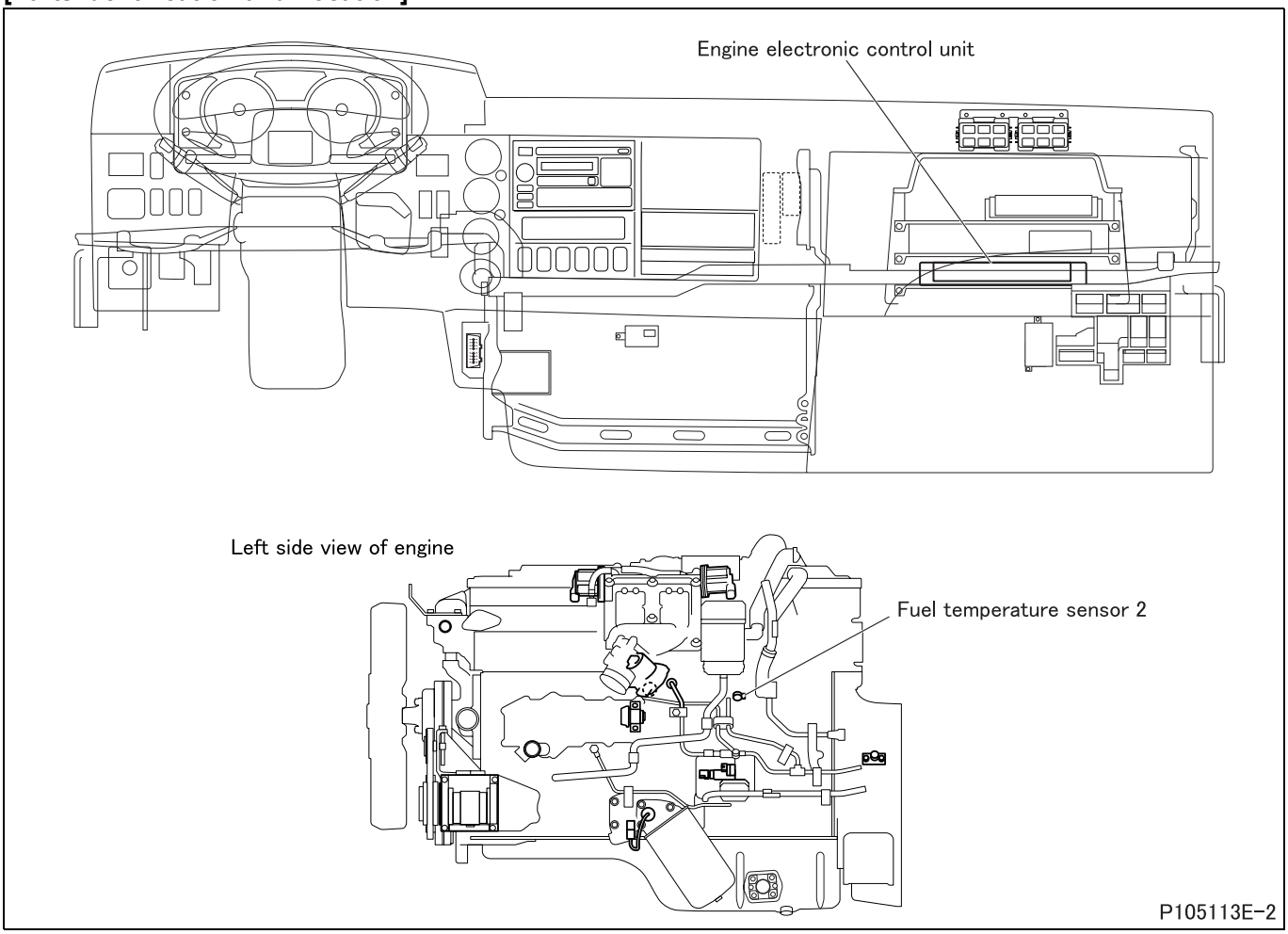

[Fault diagnosis]

- Perform checks in the sequence of the following steps.

Step 1	Inspection items		Inspection by control data
	Maintenance item		Measure item No. 37 “Fuel Temperature (leak)” of Service Data.
	Inspection condition		–
	Requirements		• When engine is cold: Temperature is equivalent to outside temperature. • While engine is warmed up: Temperature gradually rises up. • When engine is stopped after warm-up: Temperature rise up just after engine stopped, then gradually decline.
	Inspection result (Is the judging standard satisfied?)	YES	Go to transient fault (See Gr00.).
		NO	Go to step 2.

Step 2	Inspection items		Inspection by electronic control unit connector
	Maintenance item		Measure value of voltage between connector (GF31A) terminal No. 31 and (GF35A) terminal 26.
	Inspection condition		• Measure from back side of connector of harness with each device connected to harness. • Starter switch: ON
	Requirements		• 20°C {68°F}: 2.45 $^{+0.14}_{-0.13}$ kΩ • 80°C {176°F}: 0.318 ± 0.008 kΩ • 110°C {230°F}: 0.1417 ± 0.0018 kΩ
	Inspection result (Is the judging standard satisfied?)	YES	Go to step 3.
		NO	Go to step 4.

Step 3	Inspection items		Inspection of electronic control unit connector
	Maintenance item		Inspection of connector
	Inspection condition		–
	Requirements		• Connector is properly connected. • No trace of water entry is found. • No corrosion is found in terminal. • Connection to terminal is appropriate.
	Inspection result (Is the judging standard satisfied?)	YES	Go to step 8.
		NO	Modify connector.

Step 4	Inspection items		Inspection of sensor connector
	Maintenance item		Inspection of connector
	Inspection condition		–
	Requirements		• Connector is properly connected. • No trace of water entry is found. • No corrosion is found in terminal. • Connection to terminal is appropriate.
	Inspection result (Is the judging standard satisfied?)	YES	Go to step 5.
		NO	Modify connector.

Step 5	Inspection items		Inspection of fuel temperature sensor 2 unit
	Maintenance item		Measure value of resistance between connector terminal No. 1 and 2.
	Inspection condition		Put sensor in vessel filled with engine oil.
	Requirements		• 20°C {68°F}: 2.45 $^{+0.14}_{-0.13}$ kΩ • 80°C {176°F}: 0.318 ± 0.008 kΩ • 110°C {230°F}: 0.1417 ± 0.0018 kΩ
	Inspection result (Is the judging standard satisfied?)	YES	Go to step 6.
		NO	Replacement of sensor

<Step 5 inspection diagram>

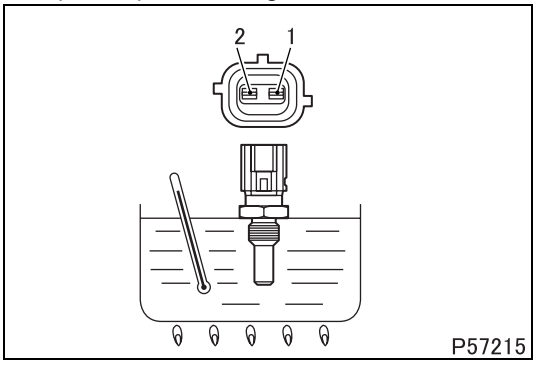

Step 6	Inspection items		Inspection of harness between electronic control unit and sensor (power supply)
	Maintenance item		Check circuit between sensor connector terminal No. 2 and electronic control unit connector (GF31A) terminal No. 31.
	Inspection condition		Disconnect each device from harness and measure from connection side of harness connector.
	Requirements		There is continuity.
	Inspection result (Is the judging standard satisfied?)	YES	Go to step 7.
		NO	Modify harness.

Step 7	Inspection items		Inspection of harness between electronic control unit and sensor (ground)
	Maintenance item		Check circuit between sensor connector terminal No. 1 and electronic control unit connector (GF35A) terminal No. 26.
	Inspection condition		Disconnect each device from harness and measure from connection side of harness connector.
	Requirements		There is continuity.
	Inspection result (Is the judging standard satisfied?)	YES	Go to step 8.
		NO	Modify harness.

Step 8	Inspection items		Inspection by control data
	Maintenance item		Measure item No. 37 “Fuel Temperature (leak)” of Service Data.
	Inspection condition		–
	Requirements		• When engine is cold: Temperature is equivalent to outside temperature. • While engine is warmed up: Temperature gradually rises up. • When engine is stopped after warm-up: Temperature rise up just after engine stopped, then gradually decline.
	Inspection result (Is the judging standard satisfied?)	YES	Go to transient fault (See Gr00.).
		NO	Replacement of electronic control unit

[Fault code]
Diagnosis code: P0191/Flash code: 11
[Monitor]
Characteristic abnormality of common rail pressure sensor
[Fault (outline)]
<Condition (1)>
- Offset

<Condition (2)>
- Output unchanged

[Diagnosis check]
- Output voltage of common rail pressure sensor is monitored.

[Code generation condition]
Check result by electronic control unit differs according to engine status.
(Warning lamp is lit and diagnosis code is displayed on first establishment of code generation condition.)
<Condition (1)>
- At engine start, signal voltage from common rail pressure sensor remains abnormally high (over 1.5 V) or low (below 0.7 V) for 0.25 second.

<Condition (2)>
- At engine start, rail pressure sensor output voltage remains zero for more than 0.5 second under given condition in engine speed and common rail pressure.
- When engine is in operation at 450 rpm up to 3300 rpm, output voltage of common rail pressure sensor remains unchanged (below 0.015 V) for more than 0.5 second.

[Diagnosis check timing]
- When code generation condition is established after starter switch ON

[Diagnostic requirement]
<Condition (1)>
- Engine status: start of cranking
- Change of water temperature after drive cycle: 30°C {86°F} or more

<Condition (2)>
- Rail pressure sensor: more than specified
- Injection quantity: more than specified
- Fuel temperature: less than specified
- Supply pump: learning completed
- During cranking or in operation

[Control effected by electronic control unit during fault]
<Condition (1)>
- Effects no special control.

<Condition (2)>
- Injection quantity is limited.
- Main injection only is allowed.
- Common rail pressure is limited.
- Exhaust gas recirculation control is stopped.
- Throttle control is stopped.
- Diesel particulate filter regeneration (manual or automatic) is stopped.
- Auto cruise control is stopped.
- Control using common rail pressure sensor feedback data is stopped.

[Probable cause of trouble]
- Open-circuit or short-circuit of harness between electronic control unit and common rail pressure sensor
- Abnormality of each connector
- Abnormality of common rail pressure sensor
- Abnormality in electronic control unit

[Recoverability]

Condition for recovery differs according to warning lamp colors.

<Control during fault>

[Warning lamp: MIL (Orange)]

- Recovered if signal becomes normal with starter switch in ON position.

[Warning lamp: Red]

- Recovered if signal becomes normal when starter switch is turned OFF to ON (power supply resumed to electronic control unit).

<Warning lamp>

[Warning lamp: MIL (Orange)]

- Extinguished at 4th driving cycle after normal signal is input.

[Warning lamp: Red]

- Extinguished on input of normal signal.

<Fault code>

[Warning lamp: MIL (Orange)]

- Automatically cleared at 40th warm up cycle after warning lamp is extinguished. (To clear as desired, erase from the memory.)

[Warning lamp: Red]

- Automatically cleared after warning lamp is extinguished. (To clear as desired, erase from the memory.)

Driving cycle : “Starter switch ON to start engine till starter switch OFF” constitutes 1 driving cycle.

Warm up cycle : “Starter switch ON to start engine till starter switch OFF after coolant temperature increased and engine warmed up” constitutes 1 warm up cycle.

[Electronic Control Unit Connection Diagram]

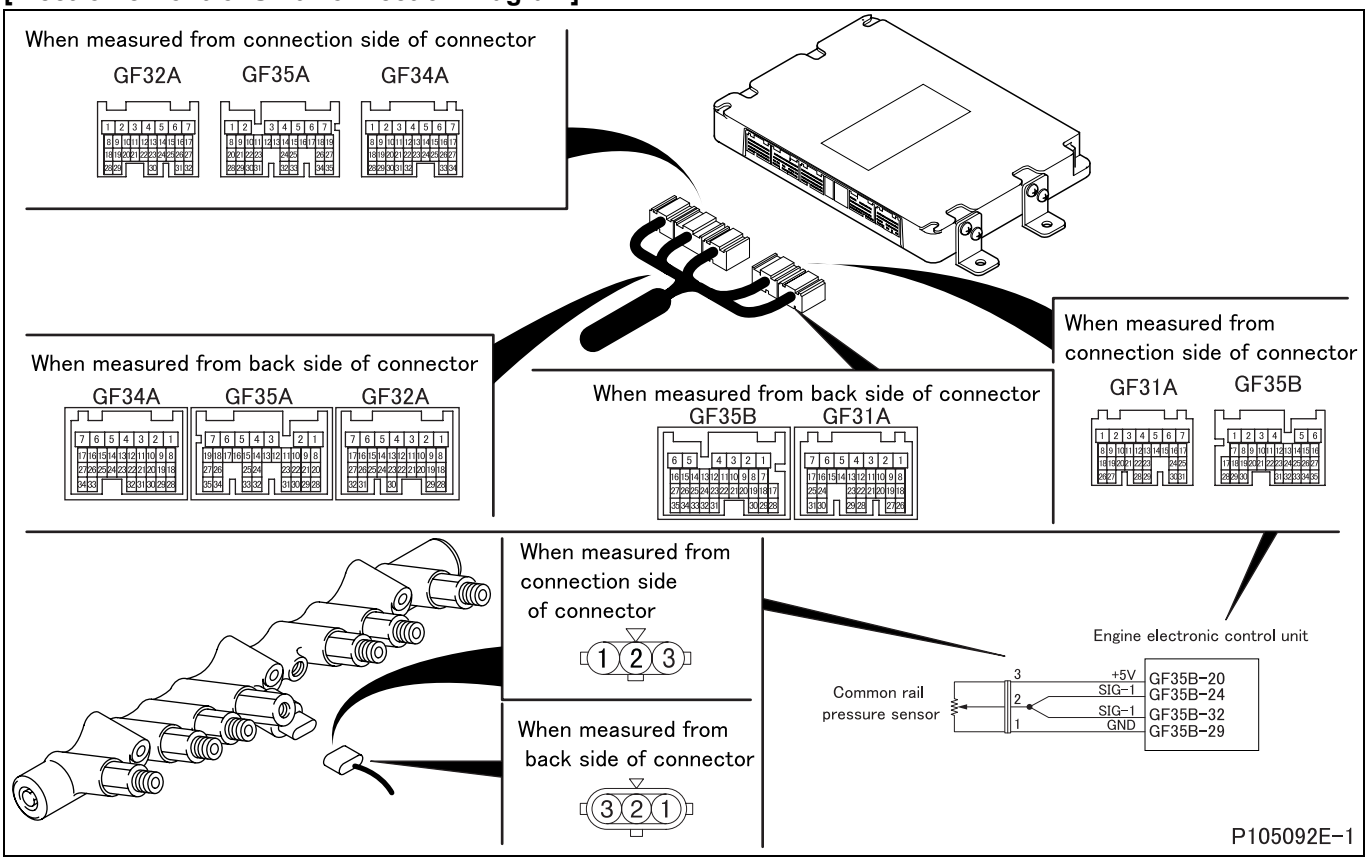

[Parts Identification and Location]

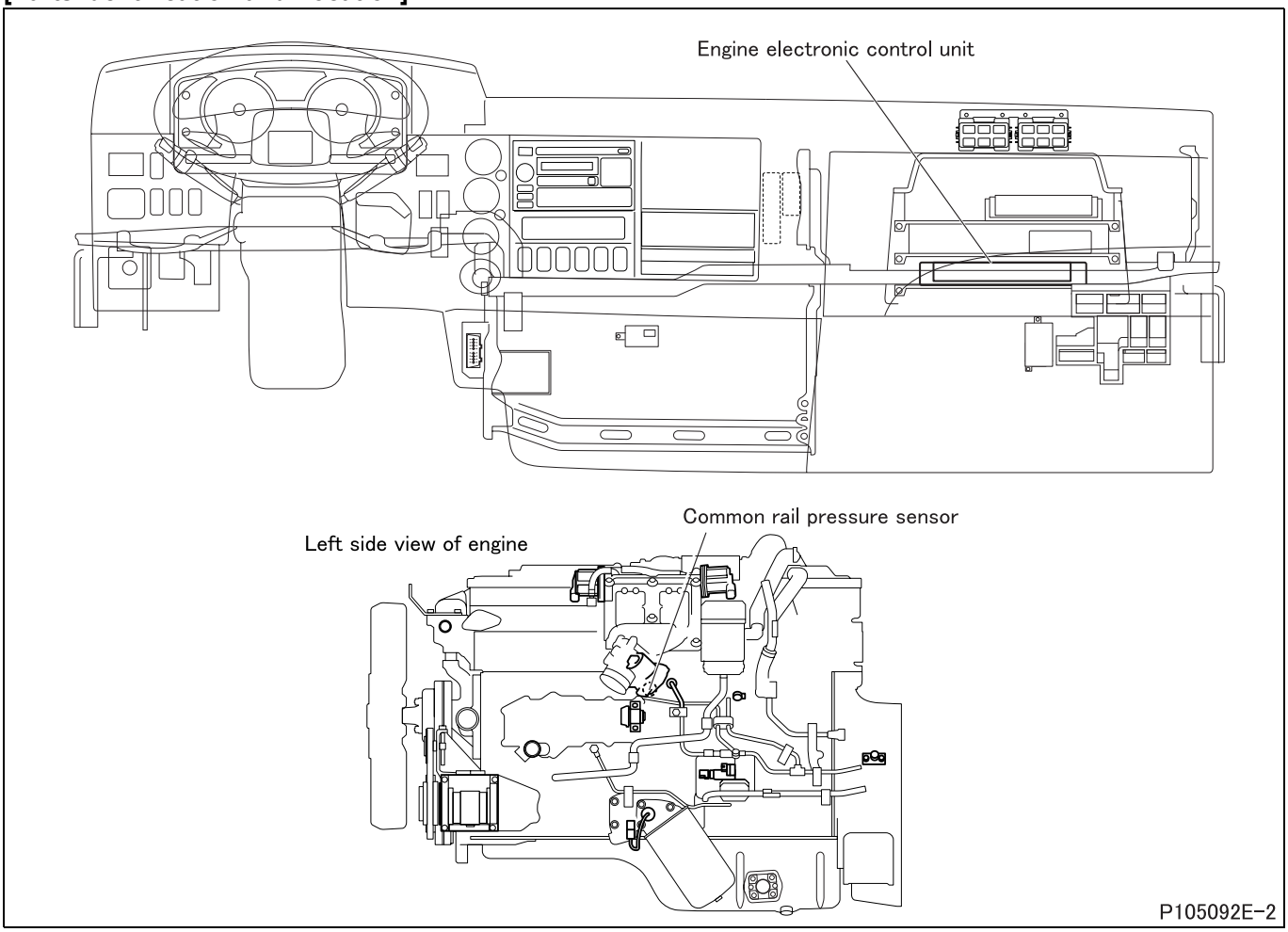

[Fault diagnosis]

- Perform checks in the sequence of the following steps.

Step 1	Inspection items		Inspection by control data
	Maintenance item		Measure item No. 09 “Actual Common Rail Pressure” of Service Data.
	Inspection condition		Starter switch: ON
	Requirements		0%
	Inspection result (Is the judging standard satisfied?)	YES	Go to transient fault (See Gr00.).
		NO	Go to step 2.

Step 2	Inspection items		Inspection by electronic control unit connector (signal)
	Maintenance item		Measure value of voltage between connector (GF35B) terminal No. 24 or 32 (+) and No. 29 (–).
	Inspection condition		• Measure from back side of connector of harness with each device connected to harness. • Starter switch: ON
	Requirements		0.5 to 4.5 V
	Inspection result (Is the judging standard satisfied?)	YES	Go to step 5.
		NO	Go to step 3.

Step 3	Inspection items		Inspection by electronic control unit connector (power supply)
	Maintenance item		Measure value of voltage between connector (GF35B) terminal No. 20 (+) and 29 (–).
	Inspection condition		• Measure from back side of connector of harness with each device connected to harness. • Starter switch: ON
	Requirements		5 V
	Inspection result (Is the judging standard satisfied?)	YES	Go to step 4.
		NO	Go to step 5.

Step 4	Inspection items		Inspection by electronic control unit connector (ground)
	Maintenance item		Measure value of voltage between connector (GF35B) terminal No. 29 (+) and (GF31A) terminal No. 3 (–).
	Inspection condition		• Measure from back side of connector of harness with each device connected to harness. • Starter switch: ON
	Requirements		0 V
	Inspection result (Is the judging standard satisfied?)	YES	Go to step 6.
		NO	Go to step 5.

Step 5	Inspection items		Inspection of electronic control unit connector
	Maintenance item		Inspection of connector
	Inspection condition		–
	Requirements		• Connector is properly connected. • No trace of water entry is found. • No corrosion is found in terminal. • Connection to terminal is appropriate.
	Inspection result (Is the judging standard satisfied?)	YES	Go to step 11.
		NO	Modify connector.

Step 6	Inspection items		Inspection of sensor connector
	Maintenance item		Inspection of connector
	Inspection condition		–
	Requirements		• Connector is properly connected. • No trace of water entry is found. • No corrosion is found in terminal. • Connection to terminal is appropriate.
	Inspection result (Is the judging standard satisfied?)	YES	Go to step 7.
		NO	Modify connector.

Step 7	Inspection items		Inspection of harness between electronic control unit and sensor (power supply)
	Maintenance item		Measure value of voltage between connector terminal No. 3 (+) and 1 (–).
	Inspection condition		• Measure from back side of connector of harness with each device connected to harness. • Starter switch: ON
	Requirements		5 V
	Inspection result (Is the judging standard satisfied?)	YES	Go to step 9.
		NO	Go to step 8.

Step 8	Inspection items		Inspection of harness between electronic control unit and sensor (power supply)
	Maintenance item		Check circuit between sensor connector terminal No. 3 and electronic control unit connector (GF35B) terminal No. 20.
	Inspection condition		Disconnect each device from harness and measure from connection side of harness connector.
	Requirements		There is continuity.
	Inspection result (Is the judging standard satisfied?)	YES	Go to step 11.
		NO	Modify harness.

Step 9	Inspection items		Inspection of harness between electronic control unit and sensor (ground)
	Maintenance item		Check circuit between sensor connector terminal No. 1 and electronic control unit connector (GF35B) terminal No. 29.
	Inspection condition		Disconnect each device from harness and measure from connection side of harness connector.
	Requirements		There is continuity.
	Inspection result (Is the judging standard satisfied?)	YES	Go to step 10.
		NO	Modify harness.

Step 10	Inspection items		Inspection of harness between electronic control unit and sensor (signal)
	Maintenance item		Check circuit between sensor connector terminal No. 2 and electronic control unit connector (GF35B) terminal No. 24 or 32.
	Inspection condition		Disconnect each device from harness and measure from connection side of harness connector.
	Requirements		There is continuity.
	Inspection result (Is the judging standard satisfied?)	YES	After replacement of sensor, go to step 11.
		NO	Modify harness.

Step 11	Inspection items		Inspection by control data
	Maintenance item		Measure item No. 09 “Actual Common Rail Pressure” of Service Data.
	Inspection condition		Starter switch: ON
	Requirements		0%
	Inspection result (Is the judging standard satisfied?)	YES	Go to transient fault (See Gr00.).
		NO	Replacement of rail

[Fault code]
Diagnosis code: P0192/Flash code: 11
[Monitor]
Abnormality of common rail pressure sensor
[Fault (outline)]
Low signal range check
[Diagnosis check]
- Output voltage of common rail pressure sensor is monitored.

[Code generation condition]
- Voltage of common rail pressure sensor remains below 0.2 V for approx. 2.5 seconds.
  (Warning lamp is lit and diagnosis code is displayed on first establishment of code generation condition.)

[Diagnosis check timing]
- When code generation condition is established after starter switch ON

[Diagnostic requirement]
- 2 seconds passed after starter switch ON
- 2 seconds passed after cranking
- Battery voltage: normal

[Control effected by electronic control unit during fault]
- Injection quantity is limited.
- Main injection only is allowed.
- Common rail pressure is limited.
- Exhaust gas recirculation control is stopped.
- Throttle control is stopped.
- Diesel particulate filter regeneration (manual or automatic) is stopped.
- Auto cruise control is stopped.
- Control using common rail pressure sensor feedback data is stopped.

[Probable cause of trouble]
- Open-circuit or short-circuit of harness between electronic control unit and common rail pressure sensor
- Abnormality of each connector
- Abnormality of common rail pressure sensor
- Abnormality in electronic control unit

[Recoverability]
<Control during fault>
- Recovered if signal becomes normal with starter switch in ON position.

<Warning lamp>
- Extinguished at 4th driving cycle after normal signal is input.

<Fault code>
- Automatically cleared at 40th warm up cycle after warning lamp is extinguished. (To clear as desired, erase from the memory.)

Driving cycle : “Starter switch ON to start engine till starter switch OFF” constitutes 1 driving cycle.
Warm up cycle : “Starter switch ON to start engine till starter switch OFF after coolant temperature increased and engine warmed up” constitutes 1 warm up cycle.

[Electronic Control Unit Connection Diagram]

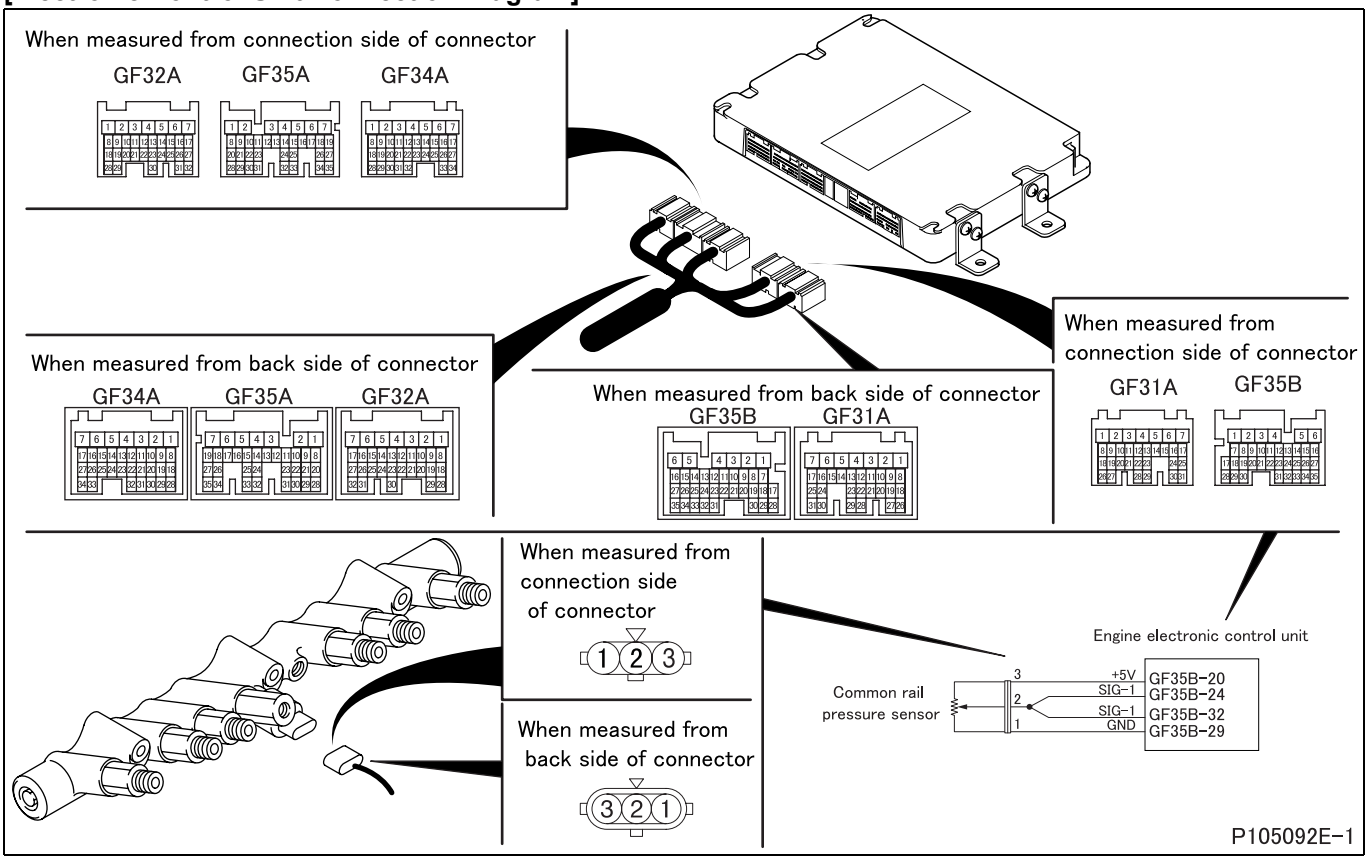

[Parts Identification and Location]

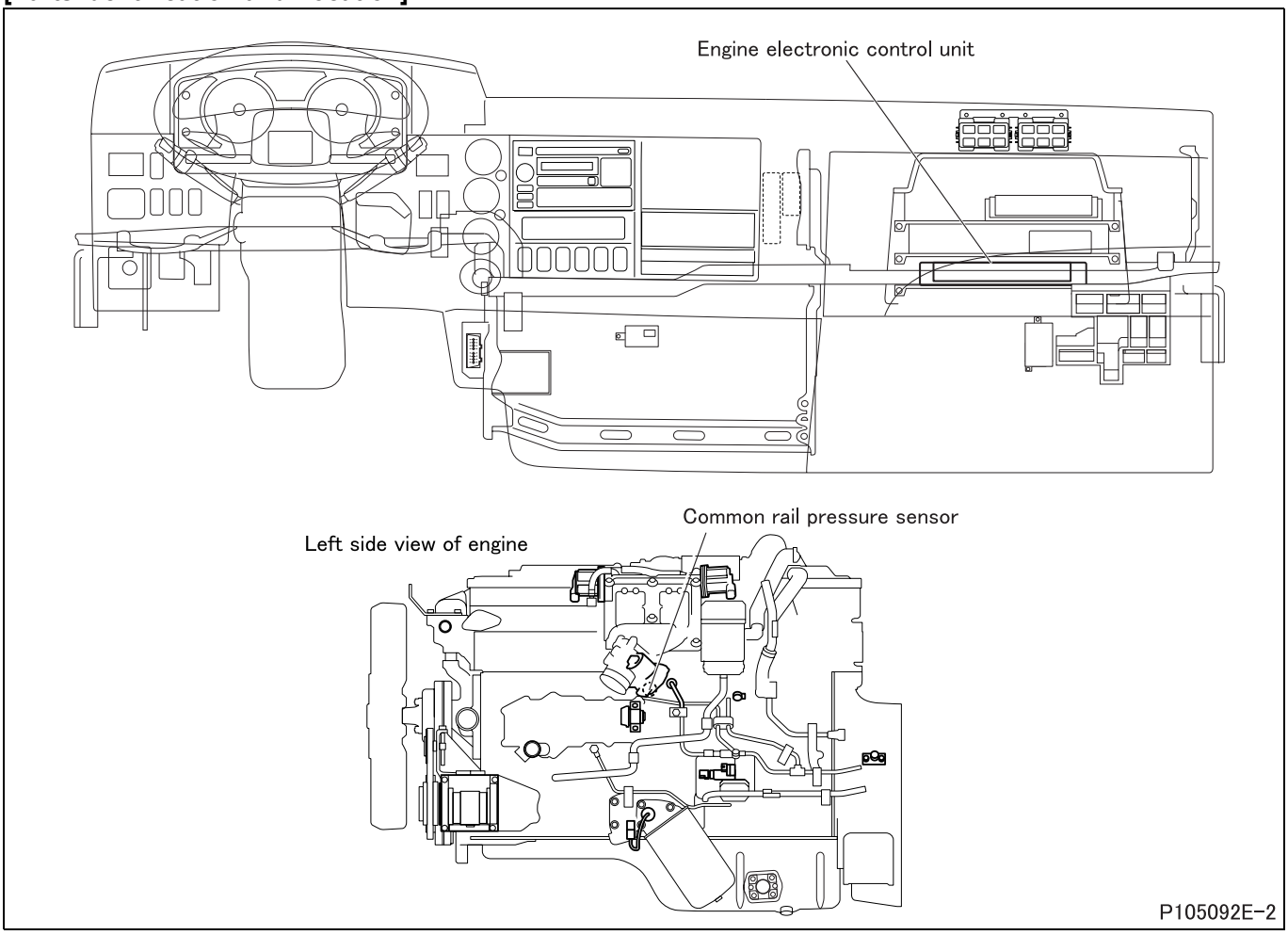

[Fault diagnosis]

- Perform checks in the sequence of the following steps.

Step 1	Inspection items		Inspection by control data
	Maintenance item		Measure item No. 09 “Actual Common Rail Pressure” of Service Data.
	Inspection condition		Starter switch: ON
	Requirements		0%
	Inspection result (Is the judging standard satisfied?)	YES	Go to transient fault (See Gr00.).
		NO	Go to step 2.

Step 2	Inspection items		Inspection by electronic control unit connector (signal)
	Maintenance item		Measure value of voltage between connector (GF35B) terminal No. 24 or 32 (+) and No. 29 (–).
	Inspection condition		• Measure from back side of connector of harness with each device connected to harness. • Starter switch: ON
	Requirements		0.5 to 4.5 V
	Inspection result (Is the judging standard satisfied?)	YES	Go to step 5.
		NO	Go to step 3.

Step 3	Inspection items		Inspection by electronic control unit connector (power supply)
	Maintenance item		Measure value of voltage between connector (GF35B) terminal No. 20 (+) and 29 (–).
	Inspection condition		• Measure from back side of connector of harness with each device connected to harness. • Starter switch: ON
	Requirements		5 V
	Inspection result (Is the judging standard satisfied?)	YES	Go to step 4.
		NO	Go to step 5.

Step 4	Inspection items		Inspection by electronic control unit connector (ground)
	Maintenance item		Measure value of voltage between connector (GF35B) terminal No. 29 (+) and (GF31A) terminal No. 3 (–).
	Inspection condition		• Measure from back side of connector of harness with each device connected to harness. • Starter switch: ON
	Requirements		0 V
	Inspection result (Is the judging standard satisfied?)	YES	Go to step 6.
		NO	Go to step 5.

Step 5	Inspection items		Inspection of electronic control unit connector
	Maintenance item		Inspection of connector
	Inspection condition		–
	Requirements		• Connector is properly connected. • No trace of water entry is found. • No corrosion is found in terminal. • Connection to terminal is appropriate.
	Inspection result (Is the judging standard satisfied?)	YES	Go to step 11.
		NO	Modify connector.

Step 6	Inspection items		Inspection of sensor connector
	Maintenance item		Inspection of connector
	Inspection condition		–
	Requirements		• Connector is properly connected. • No trace of water entry is found. • No corrosion is found in terminal. • Connection to terminal is appropriate.
	Inspection result (Is the judging standard satisfied?)	YES	Go to step 7.
		NO	Modify connector.

Step 7	Inspection items		Inspection of harness between electronic control unit and sensor (power supply)
	Maintenance item		Measure value of voltage between connector terminal No. 3 (+) and 1 (–).
	Inspection condition		• Measure from back side of connector of harness with each device connected to harness. • Starter switch: ON
	Requirements		5 V
	Inspection result (Is the judging standard satisfied?)	YES	Go to step 9.
		NO	Go to step 8.

Step 8	Inspection items		Inspection of harness between electronic control unit and sensor (power supply)
	Maintenance item		Check circuit between sensor connector terminal No. 3 and electronic control unit connector (GF35B) terminal No. 20.
	Inspection condition		Disconnect each device from harness and measure from connection side of harness connector.
	Requirements		There is continuity.
	Inspection result (Is the judging standard satisfied?)	YES	Go to step 11.
		NO	Modify harness.

Step 9	Inspection items		Inspection of harness between electronic control unit and sensor (ground)
	Maintenance item		Check circuit between sensor connector terminal No. 1 and electronic control unit connector (GF35B) terminal No. 29.
	Inspection condition		Disconnect each device from harness and measure from connection side of harness connector.
	Requirements		There is continuity.
	Inspection result (Is the judging standard satisfied?)	YES	Go to step 10.
		NO	Modify harness.

Step 10	Inspection items		Inspection of harness between electronic control unit and sensor (signal)
	Maintenance item		Check circuit between sensor connector terminal No. 2 and electronic control unit connector (GF35B) terminal No. 24 or 32.
	Inspection condition		Disconnect each device from harness and measure from connection side of harness connector.
	Requirements		There is continuity.
	Inspection result (Is the judging standard satisfied?)	YES	After replacement of sensor, go to step 11.
		NO	Modify harness.

Step 11	Inspection items		Inspection by control data
	Maintenance item		Measure item No. 09 “Actual Common Rail Pressure” of Service Data.
	Inspection condition		Starter switch: ON
	Requirements		0%
	Inspection result (Is the judging standard satisfied?)	YES	Go to transient fault (See Gr00.).
		NO	Replacement of rail

[Fault code]
Diagnosis code: P0193/Flash code: 11
[Monitor]
Abnormality of common rail pressure sensor
[Fault (outline)]
High signal range check
[Diagnosis check]
- Output voltage of common rail pressure sensor is monitored.

[Code generation condition]
- Voltage of common rail pressure sensor remains over 4.8 V for approx. 2.5 seconds.
  (Warning lamp is lit and diagnosis code is displayed on first establishment of code generation condition.)

[Diagnosis check timing]
- When code generation condition is established after starter switch ON

[Diagnostic requirement]
- 2 seconds passed after starter switch ON
- 2 seconds passed after cranking
- Battery voltage: normal

[Control effected by electronic control unit during fault]
- Injection quantity is limited.
- Main injection only is allowed.
- Common rail pressure is limited.
- Exhaust gas recirculation control is stopped.
- Throttle control is stopped.
- Diesel particulate filter regeneration (manual or automatic) is stopped.
- Auto cruise control is stopped.
- Control using common rail pressure sensor feedback data is stopped.

[Probable cause of trouble]
- Open-circuit or short-circuit of harness between electronic control unit and common rail pressure sensor
- Abnormality of each connector
- Abnormality of common rail pressure sensor
- Abnormality in electronic control unit

[Recoverability]
<Control during fault>
- Recovered if signal becomes normal with starter switch in ON position.

<Warning lamp>
- Extinguished at 4th driving cycle after normal signal is input.

<Fault code>
- Automatically cleared at 40th warm up cycle after warning lamp is extinguished. (To clear as desired, erase from the memory.)

Driving cycle : “Starter switch ON to start engine till starter switch OFF” constitutes 1 driving cycle.
Warm up cycle : “Starter switch ON to start engine till starter switch OFF after coolant temperature increased and engine warmed up” constitutes 1 warm up cycle.

[Electronic Control Unit Connection Diagram]

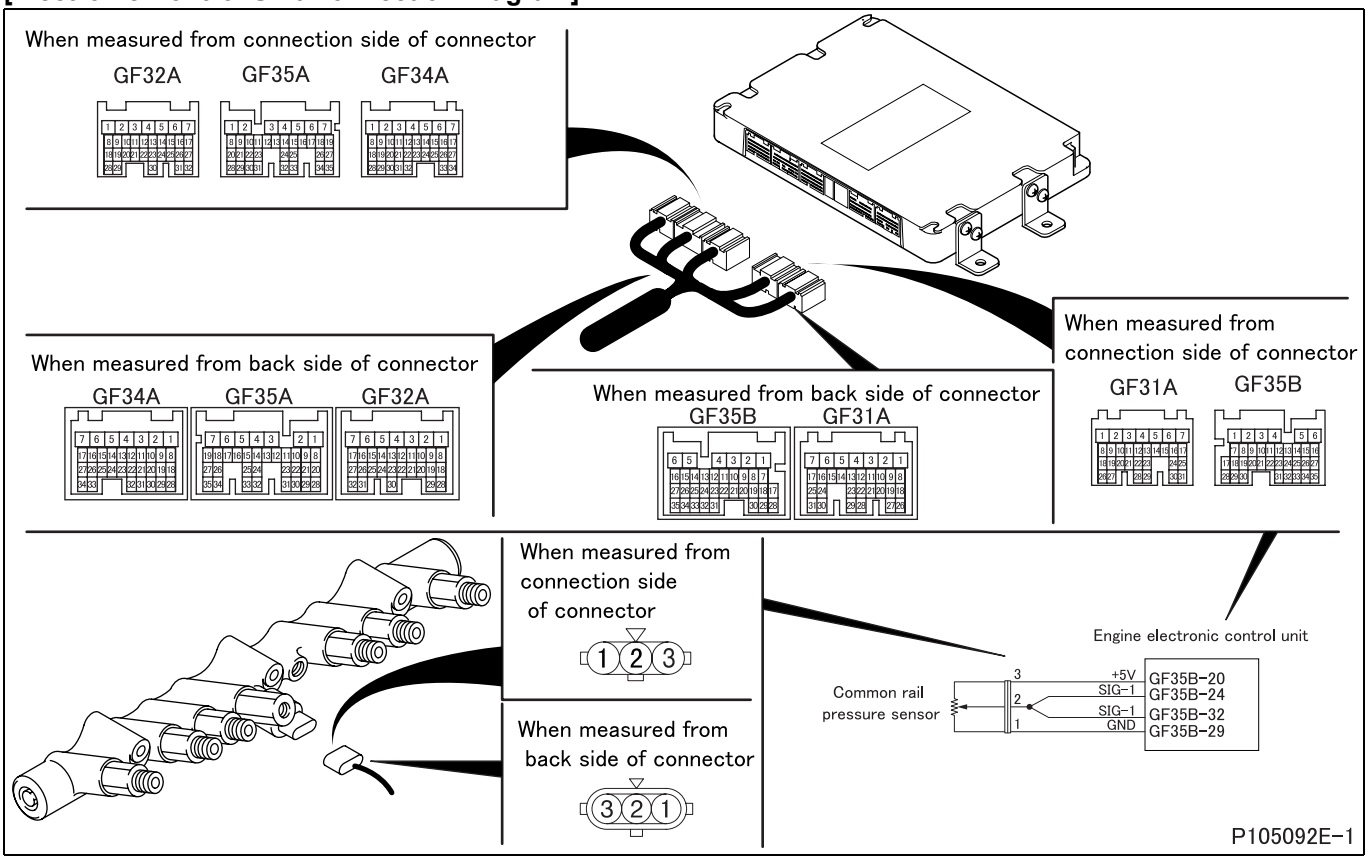

[Parts Identification and Location]

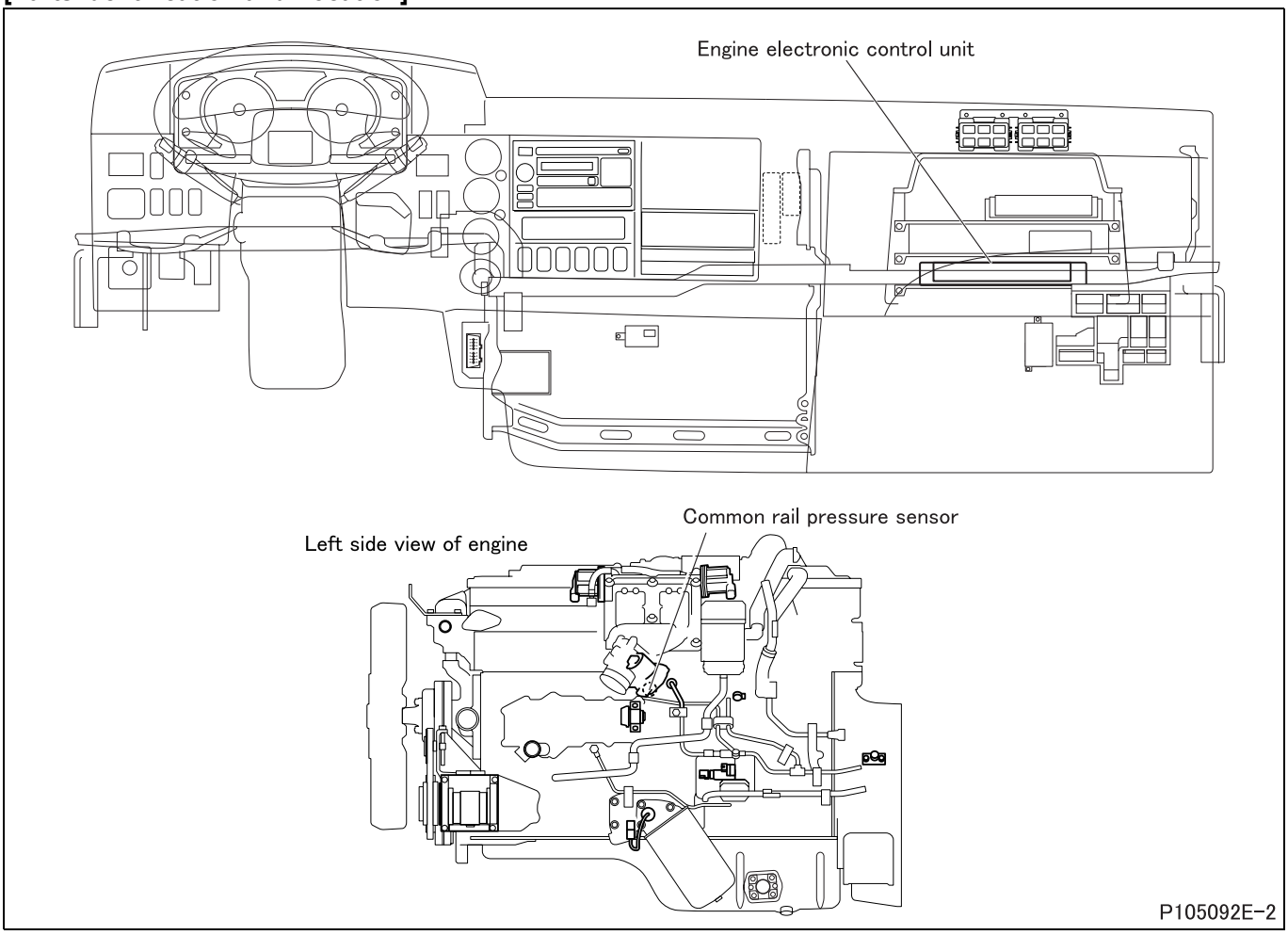

[Fault diagnosis]

- Perform checks in the sequence of the following steps.

Step 1	Inspection items		Inspection by control data
	Maintenance item		Measure item No. 09 “Actual Common Rail Pressure” of Service Data.
	Inspection condition		Starter switch: ON
	Requirements		0%
	Inspection result (Is the judging standard satisfied?)	YES	Go to transient fault (See Gr00.).
		NO	Go to step 2.

Step 2	Inspection items		Inspection by electronic control unit connector (signal)
	Maintenance item		Measure value of voltage between connector (GF35B) terminal No. 24 or 32 (+) and No. 29 (–).
	Inspection condition		• Measure from back side of connector of harness with each device connected to harness. • Starter switch: ON
	Requirements		0.5 to 4.5 V
	Inspection result (Is the judging standard satisfied?)	YES	Go to step 5.
		NO	Go to step 3.

Step 3	Inspection items		Inspection by electronic control unit connector (power supply)
	Maintenance item		Measure value of voltage between connector (GF35B) terminal No. 20 (+) and 29 (–).
	Inspection condition		• Measure from back side of connector of harness with each device connected to harness. • Starter switch: ON
	Requirements		5 V
	Inspection result (Is the judging standard satisfied?)	YES	Go to step 4.
		NO	Go to step 5.

Step 4	Inspection items		Inspection by electronic control unit connector (ground)
	Maintenance item		Measure value of voltage between connector (GF35B) terminal No. 29 (+) and (GF31A) terminal No. 3 (–).
	Inspection condition		• Measure from back side of connector of harness with each device connected to harness. • Starter switch: ON
	Requirements		0 V
	Inspection result (Is the judging standard satisfied?)	YES	Go to step 6.
		NO	Go to step 5.

Step 5	Inspection items		Inspection of electronic control unit connector
	Maintenance item		Inspection of connector
	Inspection condition		–
	Requirements		• Connector is properly connected. • No trace of water entry is found. • No corrosion is found in terminal. • Connection to terminal is appropriate.
	Inspection result (Is the judging standard satisfied?)	YES	Go to step 11.
		NO	Modify connector.

Step 6	Inspection items		Inspection of sensor connector
	Maintenance item		Inspection of connector
	Inspection condition		–
	Requirements		• Connector is properly connected. • No trace of water entry is found. • No corrosion is found in terminal. • Connection to terminal is appropriate.
	Inspection result (Is the judging standard satisfied?)	YES	Go to step 7.
		NO	Modify connector.

Step 7	Inspection items		Inspection of harness between electronic control unit and sensor (power supply)
	Maintenance item		Measure value of voltage between connector terminal No. 3 (+) and 1 (–).
	Inspection condition		• Measure from back side of connector of harness with each device connected to harness. • Starter switch: ON
	Requirements		5 V
	Inspection result (Is the judging standard satisfied?)	YES	Go to step 9.
		NO	Go to step 8.

Step 8	Inspection items		Inspection of harness between electronic control unit and sensor (power supply)
	Maintenance item		Check circuit between sensor connector terminal No. 3 and electronic control unit connector (GF35B) terminal No. 20.
	Inspection condition		Disconnect each device from harness and measure from connection side of harness connector.
	Requirements		There is continuity.
	Inspection result (Is the judging standard satisfied?)	YES	Go to step 11.
		NO	Modify harness.

Step 9	Inspection items		Inspection of harness between electronic control unit and sensor (ground)
	Maintenance item		Check circuit between sensor connector terminal No. 1 and electronic control unit connector (GF35B) terminal No. 29.
	Inspection condition		Disconnect each device from harness and measure from connection side of harness connector.
	Requirements		There is continuity.
	Inspection result (Is the judging standard satisfied?)	YES	Go to step 10.
		NO	Modify harness.

Step 10	Inspection items		Inspection of harness between electronic control unit and sensor (signal)
	Maintenance item		Check circuit between sensor connector terminal No. 2 and electronic control unit connector (GF35B) terminal No. 24 or 32.
	Inspection condition		Disconnect each device from harness and measure from connection side of harness connector.
	Requirements		There is continuity.
	Inspection result (Is the judging standard satisfied?)	YES	After replacement of sensor, go to step 11.
		NO	Modify harness.

Step 11	Inspection items		Inspection by control data
	Maintenance item		Measure item No. 09 “Actual Common Rail Pressure” of Service Data.
	Inspection condition		Starter switch: ON
	Requirements		0%
	Inspection result (Is the judging standard satisfied?)	YES	Go to transient fault (See Gr00.).
		NO	Replacement of rail

[Fault code]
Diagnosis code: P0201/Flash code: 37
[Monitor]
Abnormality of injector magnetic valve (No. 1 cylinder)
[Fault (outline)]
Injector open circuit (No. 1 cylinder)
[Diagnosis check]
- Injector magnetic valve (No. 1 cylinder) circuit is monitored for fault.

[Code generation condition]
- Open-circuit of injector magnetic valve (No. 1 cylinder) is detected.
  (Warning lamp is lit and diagnosis code is displayed on first establishment of code generation condition.)

[Diagnosis check timing]
- When code generation condition is established after starter switch ON

[Diagnostic requirement]
- 2 seconds passed after starter switch ON
- 2 seconds passed after cranking
- Battery voltage: normal
- Injection time command: available
- Injector charge circuit: ON
- Post injection: none
- Engine speed sensor: normal
- Sub CPU in engine electronic control unit: normal

[Control effected by electronic control unit during fault]
- No injection in abnormal cylinder (other cylinders are limited in injection quantity)
- Exhaust gas recirculation control is stopped.
- Throttle control is stopped.
- Diesel particulate filter regeneration (manual or automatic) is stopped.
- Auto cruise control is stopped.
- Learning of FCCB (fuel control cylinder balance) is inhibited.

[Probable cause of trouble]
- Open-circuit or short-circuit of harness between electronic control unit and injector magnetic valve (No. 1 cylinder)
- Abnormality of each connector
- Abnormality of injector magnetic valve (No. 1 cylinder)
- Abnormality in electronic control unit

[Recoverability]
<Control during fault>
- Recovered if signal becomes normal with starter switch in ON position.

<Warning lamp>
- Extinguished at 4th driving cycle after normal signal is input.

<Fault code>
- Automatically cleared at 40th warm up cycle after warning lamp is extinguished. (To clear as desired, erase from the memory.)

Driving cycle : “Starter switch ON to start engine till starter switch OFF” constitutes 1 driving cycle.
Warm up cycle : “Starter switch ON to start engine till starter switch OFF after coolant temperature increased and engine warmed up” constitutes 1 warm up cycle.

[Electronic Control Unit Connection Diagram]

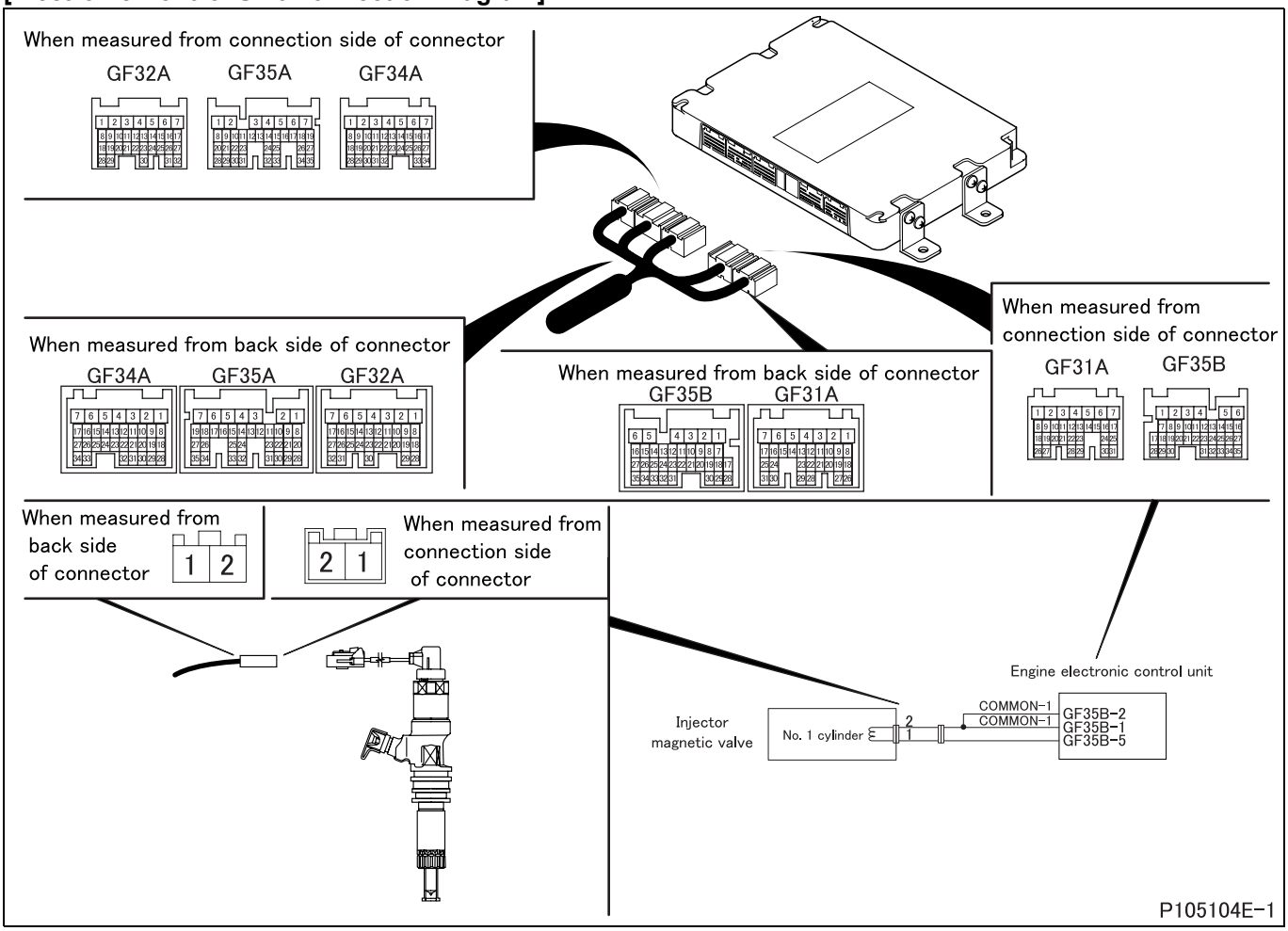

[Parts Identification and Location]

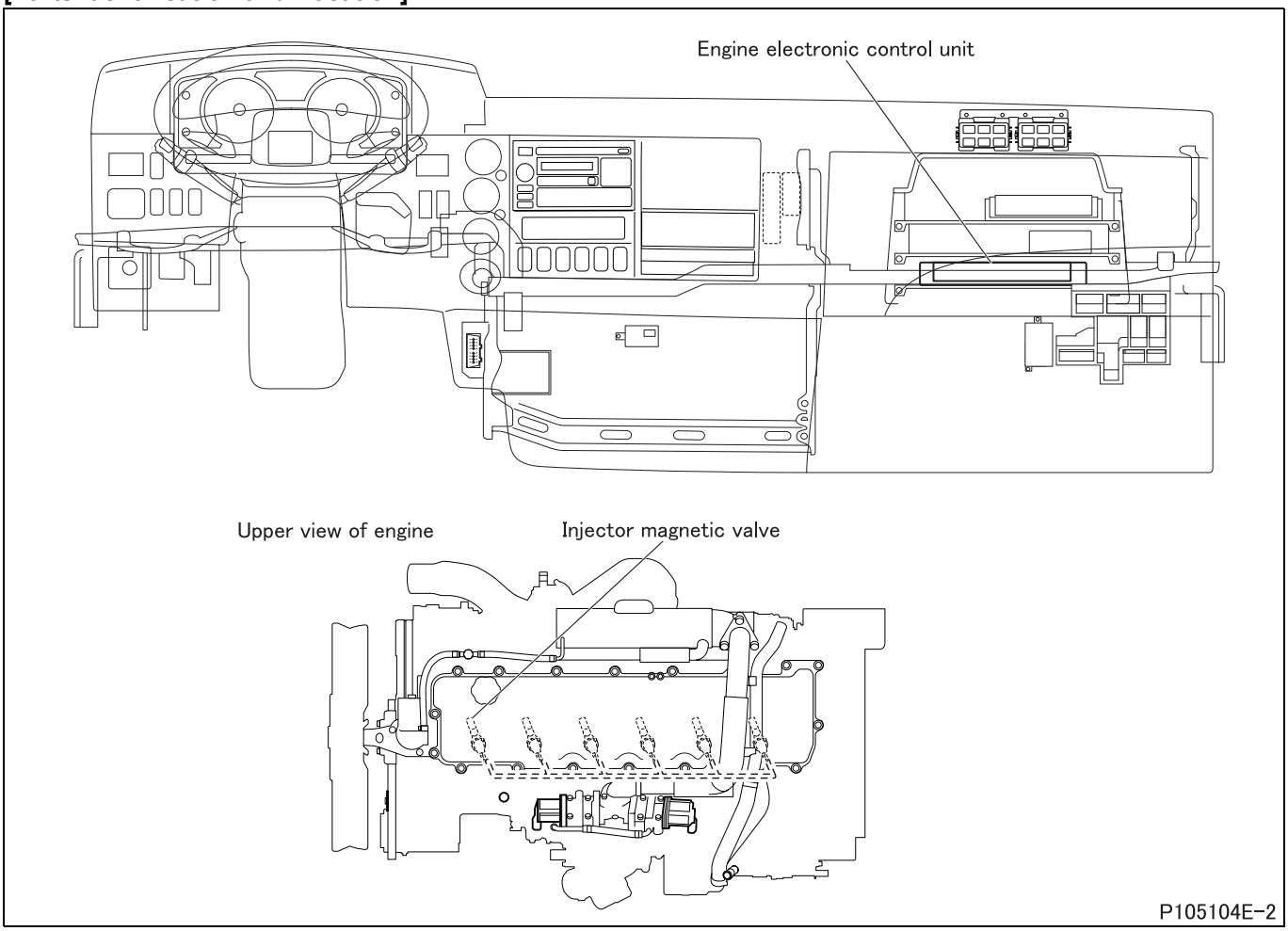

[Fault diagnosis]

- Perform checks in the sequence of the following steps.

Step 1	Inspection items		Inspection by control data
	Maintenance item		Perform actuator test item No. BB “Injector Test 1”.
	Inspection condition		• Vehicle: stationary (vehicle speed 0 km/h {0 MPH}) • Engine start: At idle • Transmission: neutral • The current diagnosis code does not occur.
	Requirements		Injector (No. 1 cylinder) is stopped during actuator test with engine changed in operating condition (vibrating).
	Inspection result (Is the judging standard satisfied?)	YES	Go to transient fault (See Gr00.).
		NO	Go to step 2.

Step 2	Inspection items		Inspection by electronic control unit connector
	Maintenance item		Measure value of resistance between connector (GF35B) terminal No. 1 and 5 or No. 2 and 5.
	Inspection condition		• Disconnect electronic control unit from harness and measure from connection side of harness connector. • Starter switch: ON
	Requirements		0.45 ± 0.1 Ω (20°C {68°F})
	Inspection result (Is the judging standard satisfied?)	YES	Go to step 3.
		NO	Go to step 4.

Step 3	Inspection items		Inspection of electronic control unit connector
	Maintenance item		Inspection of connector
	Inspection condition		–
	Requirements		• Connector is properly connected. • No trace of water entry is found. • No corrosion is found in terminal. • Connection to terminal is appropriate.
	Inspection result (Is the judging standard satisfied?)	YES	Go to step 8.
		NO	Modify connector.

Step 4	Inspection items		Inspection of injector magnetic valve connector
	Maintenance item		Inspection of connector
	Inspection condition		–
	Requirements		• Connector is properly connected. • Connection to terminal is appropriate.
	Inspection result (Is the judging standard satisfied?)	YES	Go to step 5.
		NO	Modify connector.

Step 5	Inspection items		Inspection of injector magnetic valve unit
	Maintenance item		Measure value of resistance between connector terminal No. 1 and 2.
	Inspection condition		–
	Requirements		0.45 ± 0.1 Ω (20°C {68°F})
	Inspection result (Is the judging standard satisfied?)	YES	Go to step 6.
		NO	Replacement of injector

<Step 5 inspection diagram>

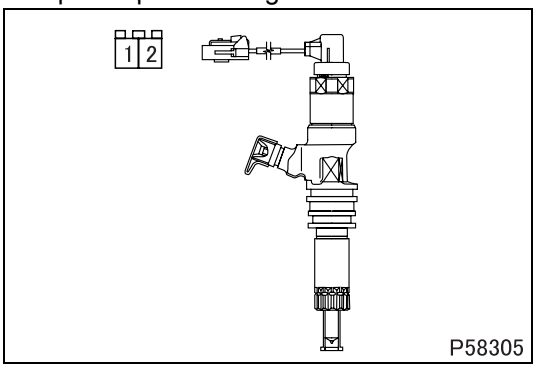

Step 6	Inspection items		Inspection of harness between injector magnetic valve and electronic control unit (power supply)
	Maintenance item		Check circuit between injector magnetic valve connector terminal No. 2 and electronic control unit connector (GF35B) terminal No. 1 or 2.
	Inspection condition		Disconnect electronic control unit from harness and measure from connection side of harness connector.
	Requirements		There is continuity.
	Inspection result (Is the judging standard satisfied?)	YES	Go to step 7.
		NO	Modify harness.

Step 7	Inspection items		Inspection of harness between injector magnetic valve and electronic control unit (ground)
	Maintenance item		Check circuit between injector magnetic valve connector terminal No. 1 and electronic control unit connector (GF35B) terminal No. 5.
	Inspection condition		Disconnect electronic control unit from harness and measure from connection side of harness connector.
	Requirements		There is continuity.
	Inspection result (Is the judging standard satisfied?)	YES	Go to step 8.
		NO	Modify harness.

Step 8	Inspection items		Inspection by control data
	Maintenance item		Perform actuator test item No. BB “Injector Test 1”.
	Inspection condition		• Vehicle: stationary (vehicle speed 0 km/h {0 MPH}) • Engine start: At idle • Transmission: neutral • The current diagnosis code does not occur.
	Requirements		Injector (No. 1 cylinder) is stopped during actuator test with engine changed in operating condition (vibrating).
	Inspection result (Is the judging standard satisfied?)	YES	Go to transient fault (See Gr00.).
		NO	Replacement of electronic control unit

[Fault code]
Diagnosis code: P0202/Flash code: 38
[Monitor]
Abnormality of injector magnetic valve (No. 2 cylinder)
[Fault (outline)]
Injector open circuit (No. 2 cylinder)
[Diagnosis check]
- Injector magnetic valve (No. 2 cylinder) circuit is monitored for fault.

[Code generation condition]
- Open-circuit of injector magnetic valve (No. 2 cylinder) is detected.
  (Warning lamp is lit and diagnosis code is displayed on first establishment of code generation condition.)

[Diagnosis check timing]
- When code generation condition is established after starter switch ON

[Diagnostic requirement]
- 2 seconds passed after starter switch ON
- 2 seconds passed after cranking
- Battery voltage: normal
- Injection time command: available
- Injector charge circuit: ON
- Post injection: none
- Engine speed sensor: normal
- Sub CPU in engine electronic control unit: normal

[Control effected by electronic control unit during fault]
- No injection in abnormal cylinder (other cylinders are limited in injection quantity)
- Exhaust gas recirculation control is stopped.
- Throttle control is stopped.
- Diesel particulate filter regeneration (manual or automatic) is stopped.
- Auto cruise control is stopped.
- Learning of FCCB (fuel control cylinder balance) is inhibited.

[Probable cause of trouble]
- Open-circuit or short-circuit of harness between electronic control unit and injector magnetic valve (No. 2 cylinder)
- Abnormality of each connector
- Abnormality of injector magnetic valve (No. 2 cylinder)
- Abnormality in electronic control unit

[Recoverability]
<Control during fault>
- Recovered if signal becomes normal with starter switch in ON position.

<Warning lamp>
- Extinguished at 4th driving cycle after normal signal is input.

<Fault code>
- Automatically cleared at 40th warm up cycle after warning lamp is extinguished. (To clear as desired, erase from the memory.)

Driving cycle : “Starter switch ON to start engine till starter switch OFF” constitutes 1 driving cycle.
Warm up cycle : “Starter switch ON to start engine till starter switch OFF after coolant temperature increased and engine warmed up” constitutes 1 warm up cycle.

[Electronic Control Unit Connection Diagram]

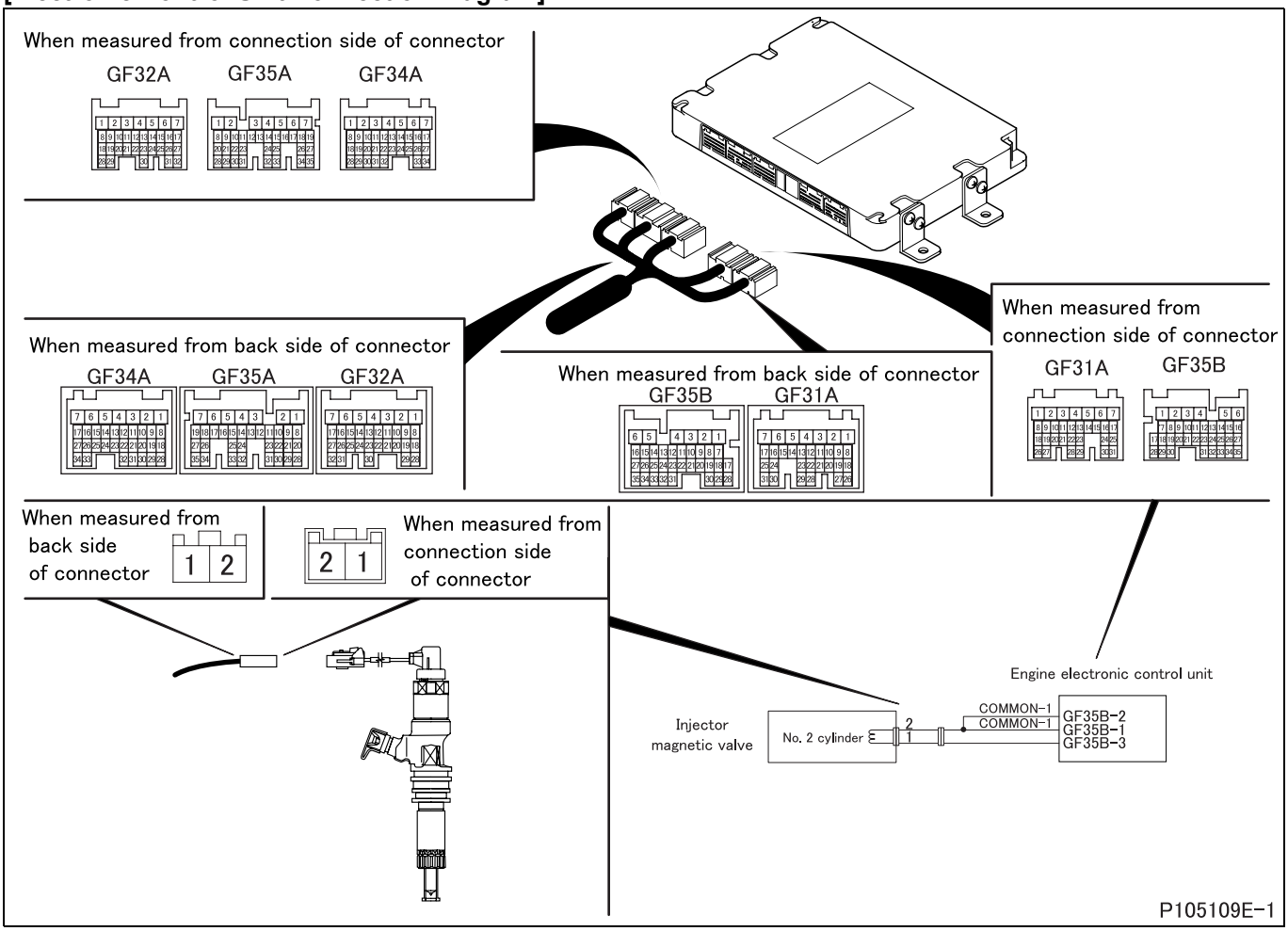

[Parts Identification and Location]

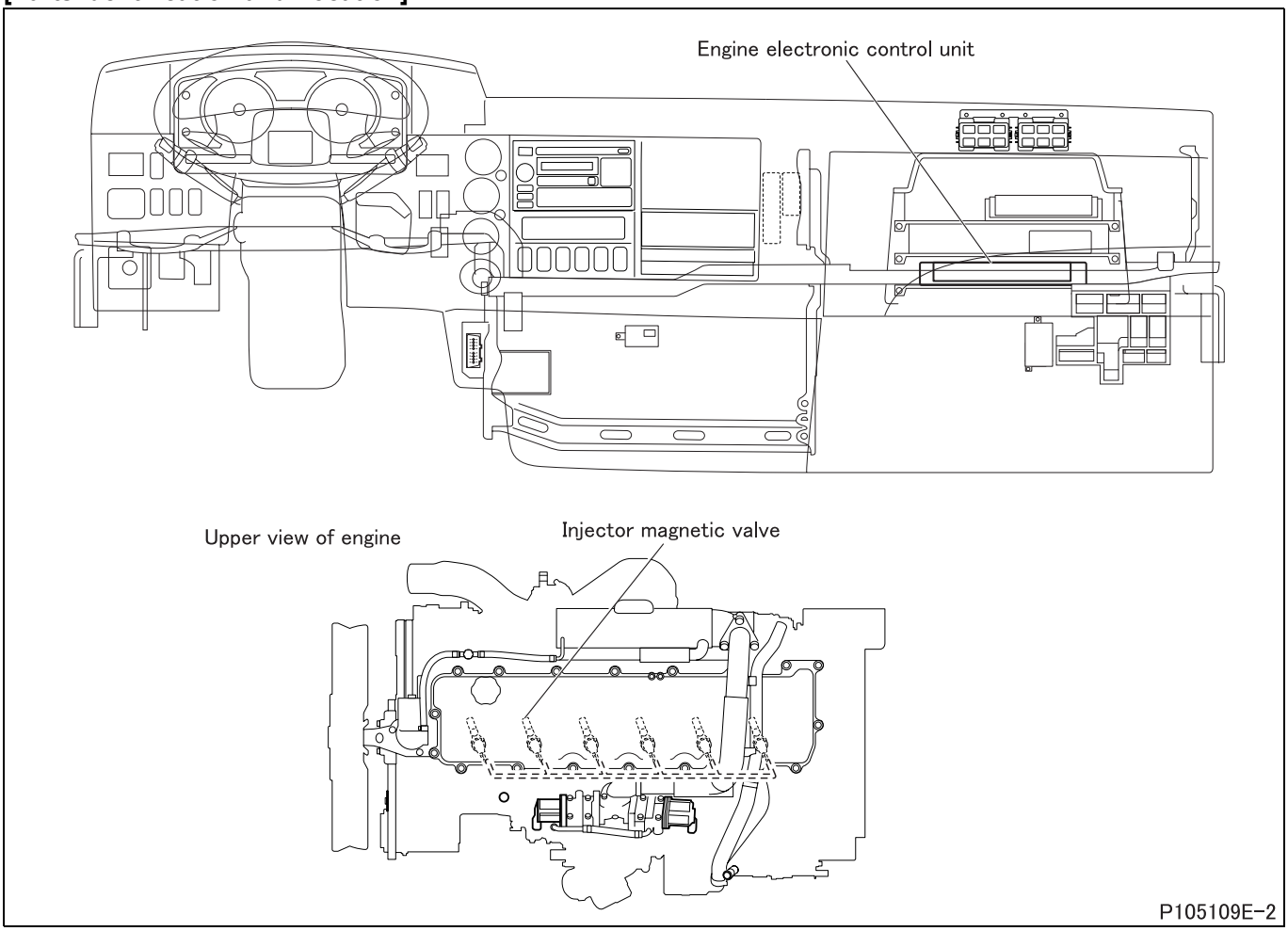

[Fault diagnosis]

- Perform checks in the sequence of the following steps.

Step 1	Inspection items		Inspection by control data
	Maintenance item		Perform actuator test item No. BF “Injector Test 5”.
	Inspection condition		• Vehicle: stationary (vehicle speed 0 km/h {0 MPH}) • Engine start: At idle • Transmission: neutral • The current diagnosis code does not occur.
	Requirements		Injector (No. 2 cylinder) is stopped during actuator test with engine changed in operating condition (vibrating).
	Inspection result (Is the judging standard satisfied?)	YES	Go to transient fault (See Gr00.).
		NO	Go to step 2.

Step 2	Inspection items		Inspection by electronic control unit connector
	Maintenance item		Measure value of resistance between connector (GF35B) terminal No. 1 and 3 or No. 2 and 3.
	Inspection condition		• Disconnect electronic control unit from harness and measure from connection side of harness connector. • Starter switch: ON
	Requirements		0.45 ± 0.1 Ω (20°C {68°F})
	Inspection result (Is the judging standard satisfied?)	YES	Go to step 3.
		NO	Go to step 4.

Step 3	Inspection items		Inspection of electronic control unit connector
	Maintenance item		Inspection of connector
	Inspection condition		–
	Requirements		• Connector is properly connected. • No trace of water entry is found. • No corrosion is found in terminal. • Connection to terminal is appropriate.
	Inspection result (Is the judging standard satisfied?)	YES	Go to step 8.
		NO	Modify connector.

Step 4	Inspection items		Inspection of injector magnetic valve connector
	Maintenance item		Inspection of connector
	Inspection condition		–
	Requirements		• Connector is properly connected. • Connection to terminal is appropriate.
	Inspection result (Is the judging standard satisfied?)	YES	Go to step 5.
		NO	Modify connector.

Step 5	Inspection items		Inspection of injector magnetic valve unit
	Maintenance item		Measure value of resistance between connector terminal No. 1 and 2.
	Inspection condition		–
	Requirements		0.45 ± 0.1 Ω (20°C {68°F})
	Inspection result (Is the judging standard satisfied?)	YES	Go to step 6.
		NO	Replacement of injector

<Step 5 inspection diagram>

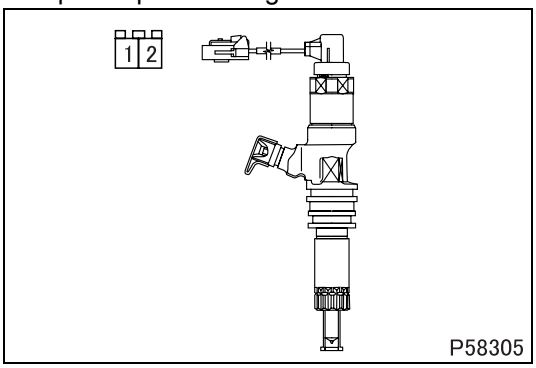

Step 6	Inspection items		Inspection of harness between injector magnetic valve and electronic control unit (power supply)
	Maintenance item		Check circuit between injector magnetic valve connector terminal No. 2 and electronic control unit connector (GF35B) terminal No. 1 or 2.
	Inspection condition		Disconnect electronic control unit from harness and measure from connection side of harness connector.
	Requirements		There is continuity.
	Inspection result (Is the judging standard satisfied?)	YES	Go to step 7.
		NO	Modify harness.

Step 7	Inspection items		Inspection of harness between injector magnetic valve and electronic control unit (ground)
	Maintenance item		Check circuit between injector magnetic valve connector terminal No. 1 and electronic control unit connector (GF35B) terminal No. 3.
	Inspection condition		Disconnect electronic control unit from harness and measure from connection side of harness connector.
	Requirements		There is continuity.
	Inspection result (Is the judging standard satisfied?)	YES	Go to step 8.
		NO	Modify harness.

Step 8	Inspection items		Inspection by control data
	Maintenance item		Perform actuator test item No. BF “Injector Test 5”.
	Inspection condition		• Vehicle: stationary (vehicle speed 0 km/h {0 MPH}) • Engine start: At idle • Transmission: neutral • The current diagnosis code does not occur.
	Requirements		Injector (No. 2 cylinder) is stopped during actuator test with engine changed in operating condition (vibrating).
	Inspection result (Is the judging standard satisfied?)	YES	Go to transient fault (See Gr00.).
		NO	Replacement of electronic control unit

[Fault code]
Diagnosis code: P0203/Flash code: 39
[Monitor]
Abnormality of injector magnetic valve (No. 3 cylinder)
[Fault (outline)]
Injector open circuit (No. 3 cylinder)
[Diagnosis check]
- Injector magnetic valve (No. 3 cylinder) circuit is monitored for fault.

[Code generation condition]
- Open-circuit of injector magnetic valve (No. 3 cylinder) is detected.
  (Warning lamp is lit and diagnosis code is displayed on first establishment of code generation condition.)

[Diagnosis check timing]
- When code generation condition is established after starter switch ON

[Diagnostic requirement]
- 2 seconds passed after starter switch ON
- 2 seconds passed after cranking
- Battery voltage: normal
- Injection time command: available
- Injector charge circuit: ON
- Post injection: none
- Engine speed sensor: normal
- Sub CPU in engine electronic control unit: normal

[Control effected by electronic control unit during fault]
- No injection in abnormal cylinder (other cylinders are limited in injection quantity)
- Exhaust gas recirculation control is stopped.
- Throttle control is stopped.
- Diesel particulate filter regeneration (manual or automatic) is stopped.
- Auto cruise control is stopped.
- Learning of FCCB (fuel control cylinder balance) is inhibited.

[Probable cause of trouble]
- Open-circuit or short-circuit of harness between electronic control unit and injector magnetic valve (No. 3 cylinder)
- Abnormality of each connector
- Abnormality of injector magnetic valve (No. 3 cylinder)
- Abnormality in electronic control unit

[Recoverability]
<Control during fault>
- Recovered if signal becomes normal with starter switch in ON position.

<Warning lamp>
- Extinguished at 4th driving cycle after normal signal is input.

<Fault code>
- Automatically cleared at 40th warm up cycle after warning lamp is extinguished. (To clear as desired, erase from the memory.)

Driving cycle : “Starter switch ON to start engine till starter switch OFF” constitutes 1 driving cycle.
Warm up cycle : “Starter switch ON to start engine till starter switch OFF after coolant temperature increased and engine warmed up” constitutes 1 warm up cycle.

[Electronic Control Unit Connection Diagram]

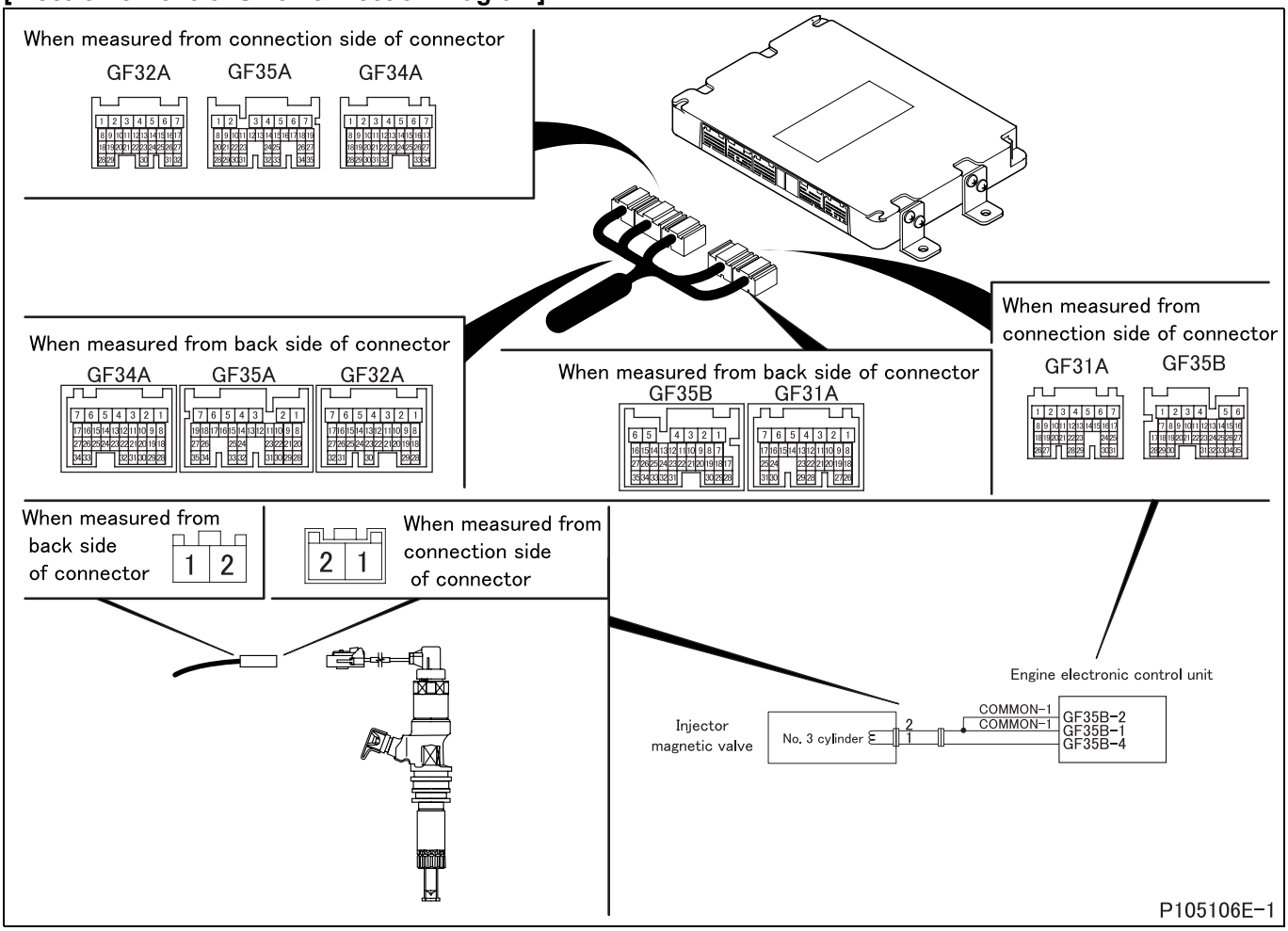

[Parts Identification and Location]

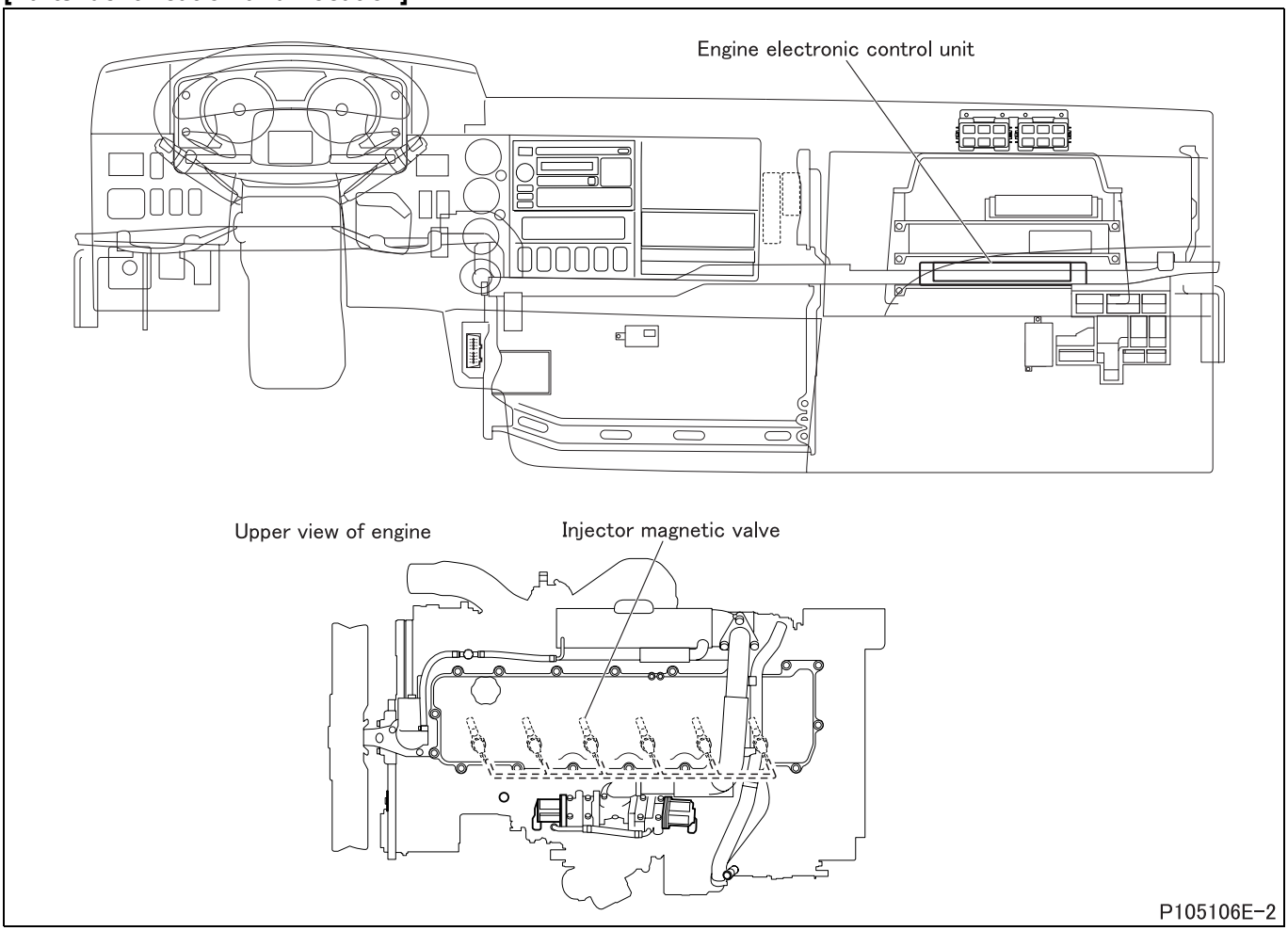

[Fault diagnosis]

- Perform checks in the sequence of the following steps.

Step 1	Inspection items		Inspection by control data
	Maintenance item		Perform actuator test item No. BD “Injector Test 3”.
	Inspection condition		• Vehicle: stationary (vehicle speed 0 km/h {0 MPH}) • Engine start: At idle • Transmission: neutral • The current diagnosis code does not occur.
	Requirements		Injector (No. 3 cylinder) is stopped during actuator test with engine changed in operating condition (vibrating).
	Inspection result (Is the judging standard satisfied?)	YES	Go to transient fault (See Gr00.).
		NO	Go to step 2.

Step 2	Inspection items		Inspection by electronic control unit connector
	Maintenance item		Measure value of resistance between connector (GF35B) terminal No. 1 and 4 or No. 2 and 4.
	Inspection condition		• Disconnect electronic control unit from harness and measure from connection side of harness connector. • Starter switch: ON
	Requirements		0.45 ± 0.1 Ω (20°C {68°F})
	Inspection result (Is the judging standard satisfied?)	YES	Go to step 3.
		NO	Go to step 4.

Step 3	Inspection items		Inspection of electronic control unit connector
	Maintenance item		Inspection of connector
	Inspection condition		–
	Requirements		• Connector is properly connected. • No trace of water entry is found. • No corrosion is found in terminal. • Connection to terminal is appropriate.
	Inspection result (Is the judging standard satisfied?)	YES	Go to step 8.
		NO	Modify connector.

Step 4	Inspection items		Inspection of injector magnetic valve connector
	Maintenance item		Inspection of connector
	Inspection condition		–
	Requirements		• Connector is properly connected. • Connection to terminal is appropriate.
	Inspection result (Is the judging standard satisfied?)	YES	Go to step 5.
		NO	Modify connector.

Step 5	Inspection items		Inspection of injector magnetic valve unit
	Maintenance item		Measure value of resistance between connector terminal No. 1 and 2.
	Inspection condition		–
	Requirements		0.45 ± 0.1 Ω (20°C {68°F})
	Inspection result (Is the judging standard satisfied?)	YES	Go to step 6.
		NO	Replacement of injector

<Step 5 inspection diagram>

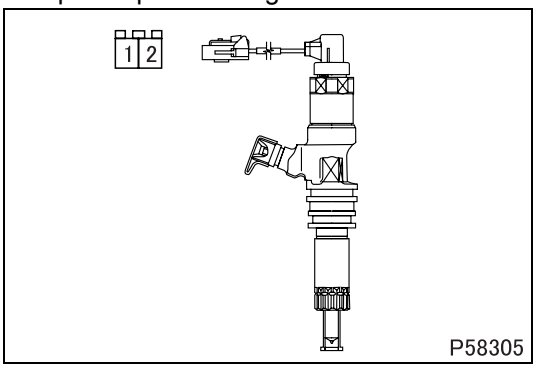

Step 6	Inspection items		Inspection of harness between injector magnetic valve and electronic control unit (power supply)
	Maintenance item		Check circuit between injector magnetic valve connector terminal No. 2 and electronic control unit connector (GF35B) terminal No. 1 or 2.
	Inspection condition		Disconnect electronic control unit from harness and measure from connection side of harness connector.
	Requirements		There is continuity.
	Inspection result (Is the judging standard satisfied?)	YES	Go to step 7.
		NO	Modify harness.

Step 7	Inspection items		Inspection of harness between injector magnetic valve and electronic control unit (ground)
	Maintenance item		Check circuit between injector magnetic valve connector terminal No. 1 and electronic control unit connector (GF35B) terminal No. 4.
	Inspection condition		Disconnect electronic control unit from harness and measure from connection side of harness connector.
	Requirements		There is continuity.
	Inspection result (Is the judging standard satisfied?)	YES	Go to step 8.
		NO	Modify harness.

Step 8	Inspection items		Inspection by control data
	Maintenance item		Perform actuator test item No. BD “Injector Test 3”.
	Inspection condition		• Vehicle: stationary (vehicle speed 0 km/h {0 MPH}) • Engine start: At idle • Transmission: neutral • The current diagnosis code does not occur.
	Requirements		Injector (No. 3 cylinder) is stopped during actuator test with engine changed in operating condition (vibrating).
	Inspection result (Is the judging standard satisfied?)	YES	Go to transient fault (See Gr00.).
		NO	Replacement of electronic control unit

[Fault code]
Diagnosis code: P0204/Flash code: 08
[Monitor]
Abnormality of injector magnetic valve (No. 4 cylinder)
[Fault (outline)]
Injector open circuit (No. 4 cylinder)
[Diagnosis check]
- Injector magnetic valve (No. 4 cylinder) circuit is monitored for fault.

[Code generation condition]
- Open-circuit of injector magnetic valve (No. 4 cylinder) is detected.
  (Warning lamp is lit and diagnosis code is displayed on first establishment of code generation condition.)

[Diagnosis check timing]
- When code generation condition is established after starter switch ON

[Diagnostic requirement]
- 2 seconds passed after starter switch ON
- 2 seconds passed after cranking
- Battery voltage: normal
- Injection time command: available
- Injector charge circuit: ON
- Post injection: none
- Engine speed sensor: normal
- Sub CPU in engine electronic control unit: normal

[Control effected by electronic control unit during fault]
- No injection in abnormal cylinder (other cylinders are limited in injection quantity)
- Exhaust gas recirculation control is stopped.
- Throttle control is stopped.
- Diesel particulate filter regeneration (manual or automatic) is stopped.
- Auto cruise control is stopped.
- Learning of FCCB (fuel control cylinder balance) is inhibited.

[Probable cause of trouble]
- Open-circuit or short-circuit of harness between electronic control unit and injector magnetic valve (No. 4 cylinder)
- Abnormality of each connector
- Abnormality of injector magnetic valve (No. 4 cylinder)
- Abnormality in electronic control unit

[Recoverability]
<Control during fault>
- Recovered if signal becomes normal with starter switch in ON position.

<Warning lamp>
- Extinguished at 4th driving cycle after normal signal is input.

<Fault code>
- Automatically cleared at 40th warm up cycle after warning lamp is extinguished. (To clear as desired, erase from the memory.)

Driving cycle : “Starter switch ON to start engine till starter switch OFF” constitutes 1 driving cycle.
Warm up cycle : “Starter switch ON to start engine till starter switch OFF after coolant temperature increased and engine warmed up” constitutes 1 warm up cycle.

[Electronic Control Unit Connection Diagram]

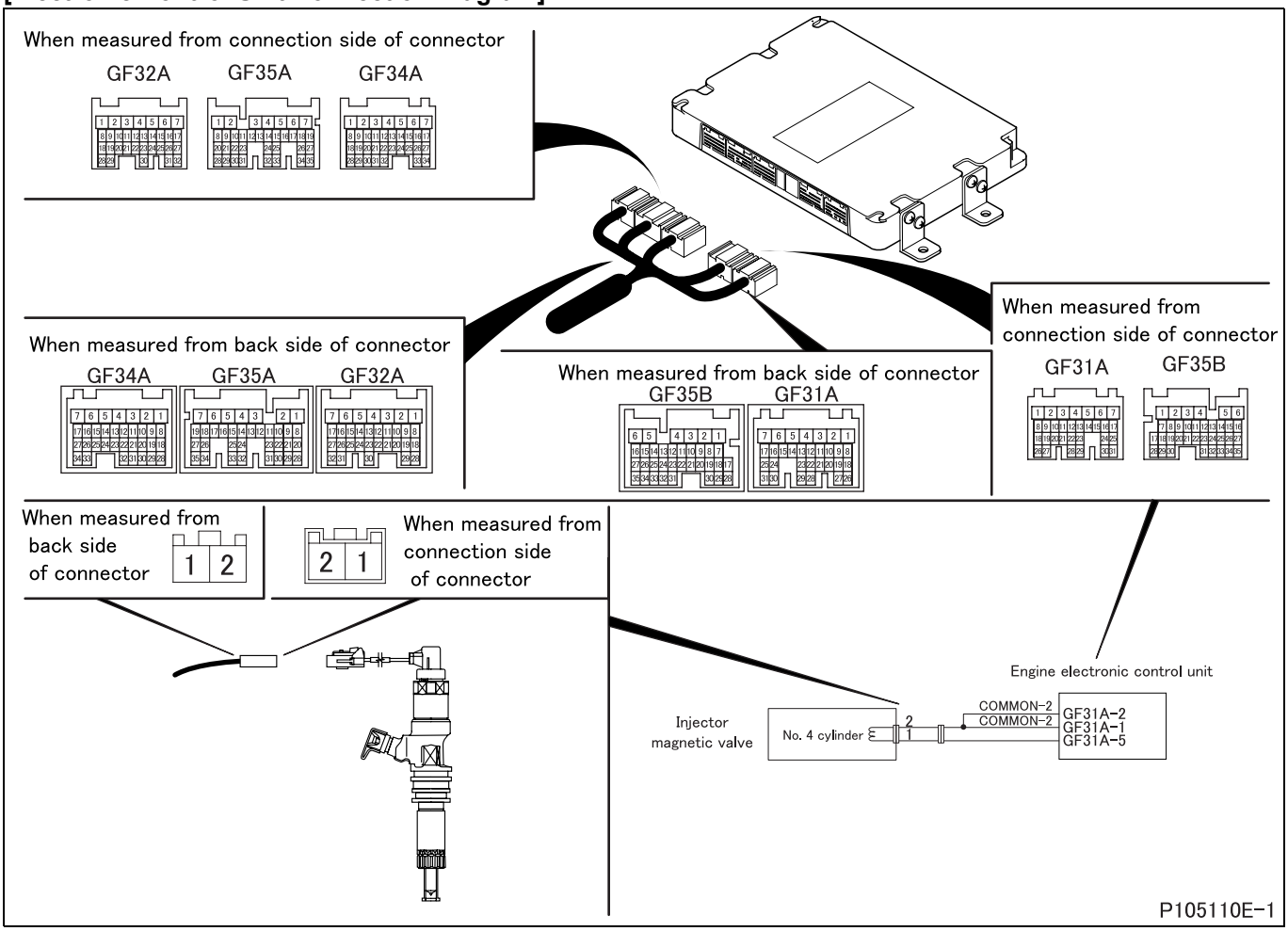

[Parts Identification and Location]

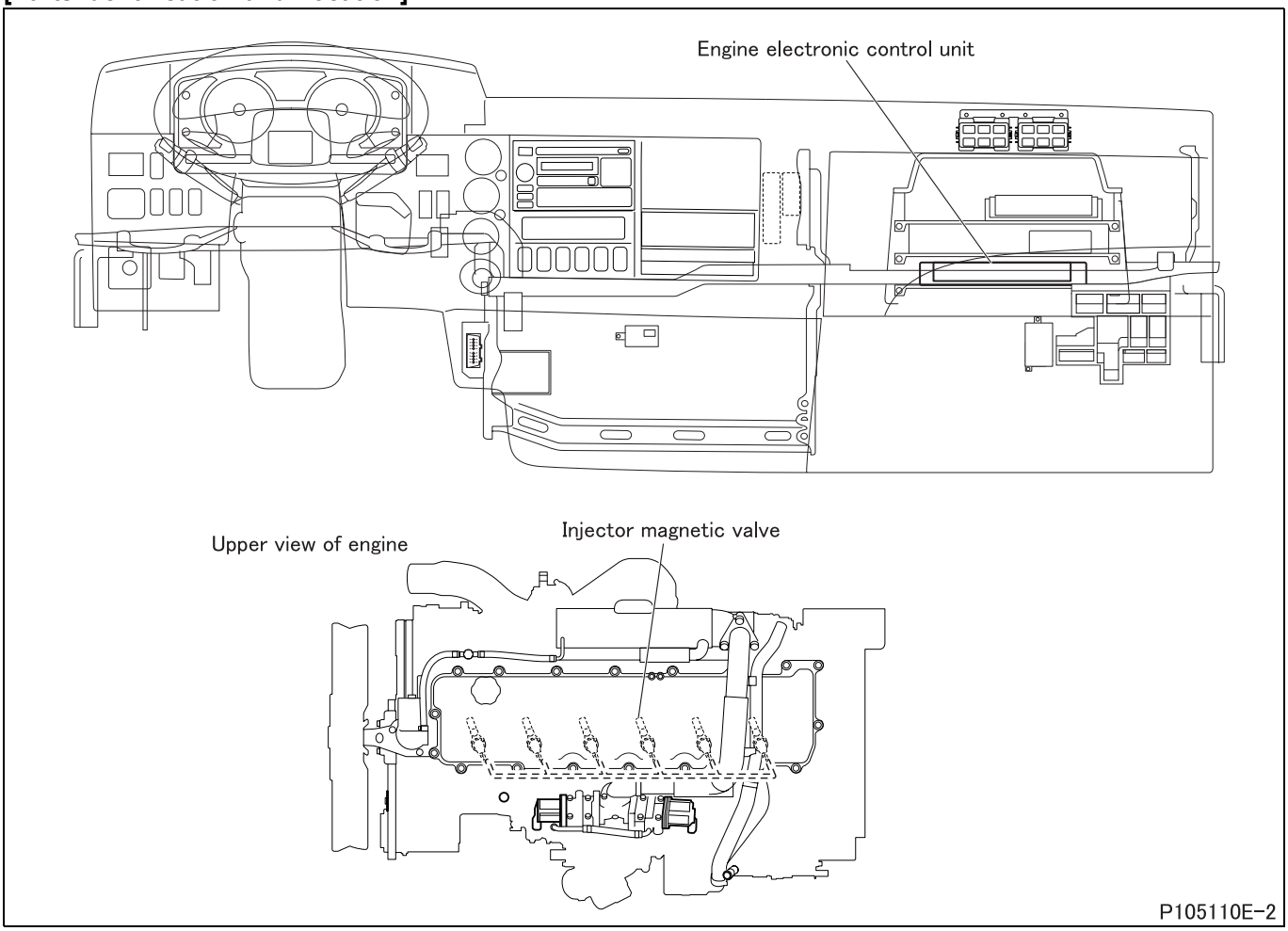

[Fault diagnosis]

- Perform checks in the sequence of the following steps.

Step 1	Inspection items		Inspection by control data
	Maintenance item		• Perform actuator test item No. C0 “Injector Test 6”.
	Inspection condition		• Vehicle: stationary (vehicle speed 0 km/h {0 MPH}) • Engine start: At idle • Transmission: neutral • The current diagnosis code does not occur.
	Requirements		Injector (No. 4 cylinder) is stopped during actuator test with engine changed in operating condition (vibrating).
	Inspection result (Is the judging standard satisfied?)	YES	Go to transient fault (See Gr00.).
		NO	Go to step 2.

Step 2	Inspection items		Inspection by electronic control unit connector
	Maintenance item		Measure value of resistance between connector (GF31A) terminal No. 1 and 5 or No. 2 and 5.
	Inspection condition		• Disconnect electronic control unit from harness and measure from connection side of harness connector. • Starter switch: ON
	Requirements		0.45 ± 0.1 Ω (20°C {68°F})
	Inspection result (Is the judging standard satisfied?)	YES	Go to step 3.
		NO	Go to step 4.

Step 3	Inspection items		Inspection of electronic control unit connector
	Maintenance item		Inspection of connector
	Inspection condition		–
	Requirements		• Connector is properly connected. • No trace of water entry is found. • No corrosion is found in terminal. • Connection to terminal is appropriate.
	Inspection result (Is the judging standard satisfied?)	YES	Go to step 8.
		NO	Modify connector.

Step 4	Inspection items		Inspection of injector magnetic valve connector
	Maintenance item		Inspection of connector
	Inspection condition		–
	Requirements		• Connector is properly connected. • Connection to terminal is appropriate.
	Inspection result (Is the judging standard satisfied?)	YES	Go to step 5.
		NO	Modify connector.

Step 5	Inspection items		Inspection of injector magnetic valve unit
	Maintenance item		Measure value of resistance between connector terminal No. 1 and 2.
	Inspection condition		–
	Requirements		0.45 ± 0.1 Ω (20°C {68°F})
	Inspection result (Is the judging standard satisfied?)	YES	Go to step 6.
		NO	Replacement of injector

<Step 5 inspection diagram>

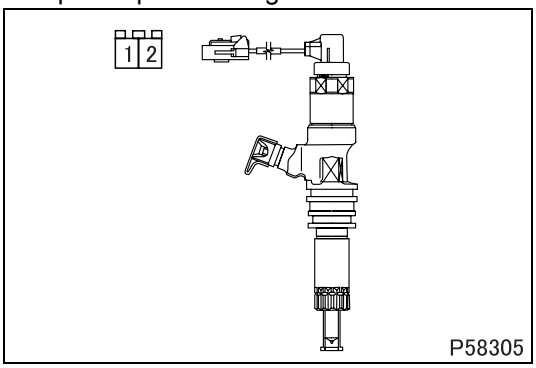

Step 6	Inspection items		Inspection of harness between injector magnetic valve and electronic control unit (power supply)
	Maintenance item		Check circuit between injector magnetic valve connector terminal No. 2 and electronic control unit connector (GF31A) terminal No. 1 or 2.
	Inspection condition		Disconnect electronic control unit from harness and measure from connection side of harness connector.
	Requirements		There is continuity.
	Inspection result (Is the judging standard satisfied?)	YES	Go to step 7.
		NO	Modify harness.

Step 7	Inspection items		Inspection of harness between injector magnetic valve and electronic control unit (ground)
	Maintenance item		Check circuit between injector magnetic valve connector terminal No. 1 and electronic control unit connector (GF31A) terminal No. 5.
	Inspection condition		Disconnect electronic control unit from harness and measure from connection side of harness connector.
	Requirements		There is continuity.
	Inspection result (Is the judging standard satisfied?)	YES	Go to step 8.
		NO	Modify harness.

Step 8	Inspection items		Inspection by control data
	Maintenance item		Perform actuator test item No. C0 “Injector Test 6”.
	Inspection condition		• Vehicle: stationary (vehicle speed 0 km/h {0 MPH}) • Engine start: At idle • Transmission: neutral • The current diagnosis code does not occur.
	Requirements		Injector (No. 4 cylinder) is stopped during actuator test with engine changed in operating condition (vibrating).
	Inspection result (Is the judging standard satisfied?)	YES	Go to transient fault (See Gr00.).
		NO	Replacement of electronic control unit

[Fault code]
Diagnosis code: P0205/Flash code: 46
[Monitor]
Abnormality of injector magnetic valve (No. 5 cylinder)
[Fault (outline)]
Injector open circuit (No. 5 cylinder)
[Diagnosis check]
- Injector magnetic valve (No. 5 cylinder) circuit is monitored for fault.

[Code generation condition]
- Open-circuit of injector magnetic valve (No. 5 cylinder) is detected.
  (Warning lamp is lit and diagnosis code is displayed on first establishment of code generation condition.)

[Diagnosis check timing]
- When code generation condition is established after starter switch ON

[Diagnostic requirement]
- 2 seconds passed after starter switch ON
- 2 seconds passed after cranking
- Battery voltage: normal
- Injection time command: available
- Injector charge circuit: ON
- Post injection: none
- Engine speed sensor: normal
- Sub CPU in engine electronic control unit: normal

[Control effected by electronic control unit during fault]
- No injection in abnormal cylinder (other cylinders are limited in injection quantity)
- Exhaust gas recirculation control is stopped.
- Throttle control is stopped.
- Diesel particulate filter regeneration (manual or automatic) is stopped.
- Auto cruise control is stopped.
- Learning of FCCB (fuel control cylinder balance) is inhibited.

[Probable cause of trouble]
- Open-circuit or short-circuit of harness between electronic control unit and injector magnetic valve (No. 5 cylinder)
- Abnormality of each connector
- Abnormality of injector magnetic valve (No. 5 cylinder)
- Abnormality in electronic control unit

[Recoverability]
<Control during fault>
- Recovered if signal becomes normal with starter switch in ON position.

<Warning lamp>
- Extinguished at 4th driving cycle after normal signal is input.

<Fault code>
- Automatically cleared at 40th warm up cycle after warning lamp is extinguished. (To clear as desired, erase from the memory.)

Driving cycle : “Starter switch ON to start engine till starter switch OFF” constitutes 1 driving cycle.
Warm up cycle : “Starter switch ON to start engine till starter switch OFF after coolant temperature increased and engine warmed up” constitutes 1 warm up cycle.

[Electronic Control Unit Connection Diagram]

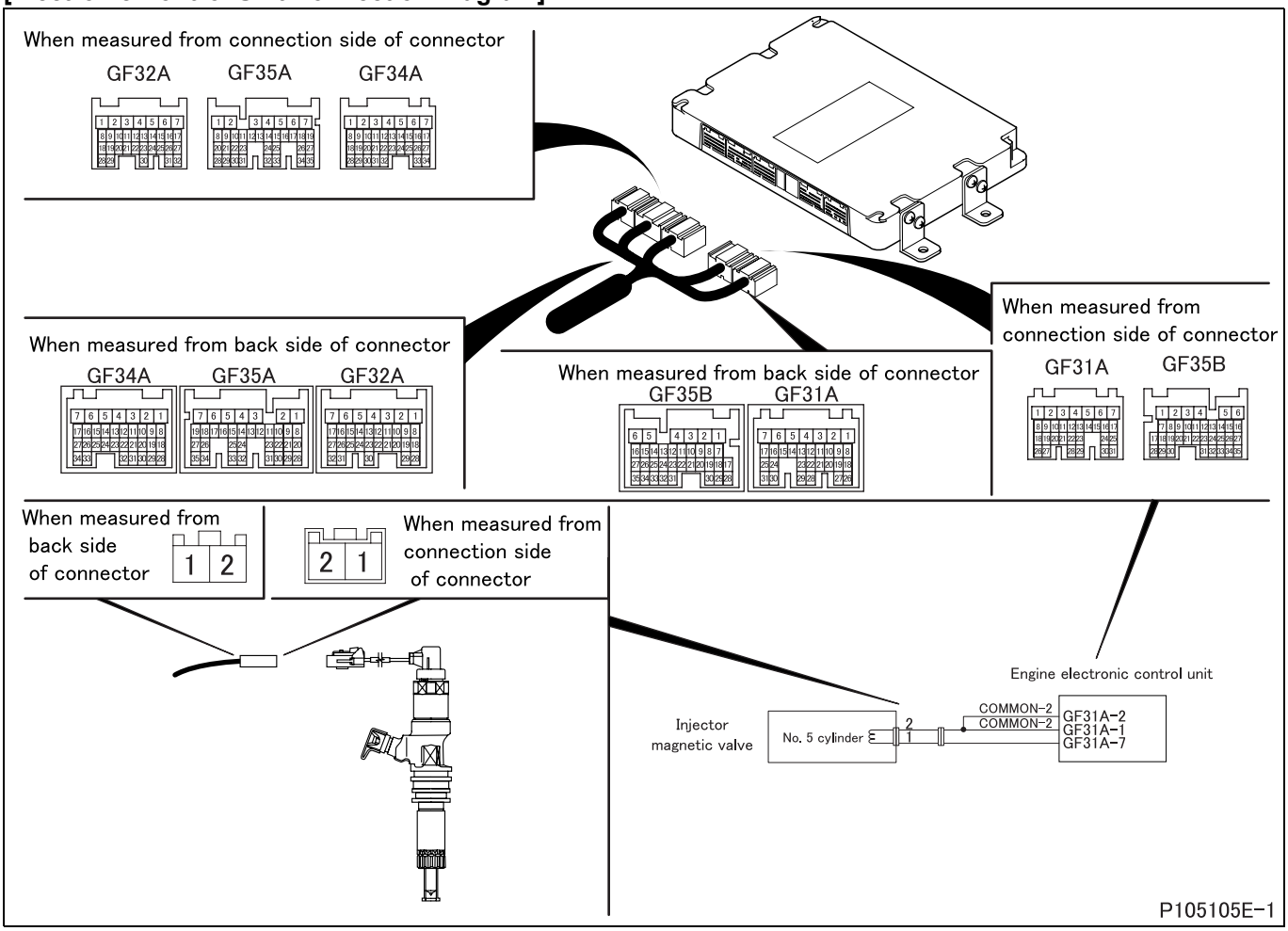

[Parts Identification and Location]

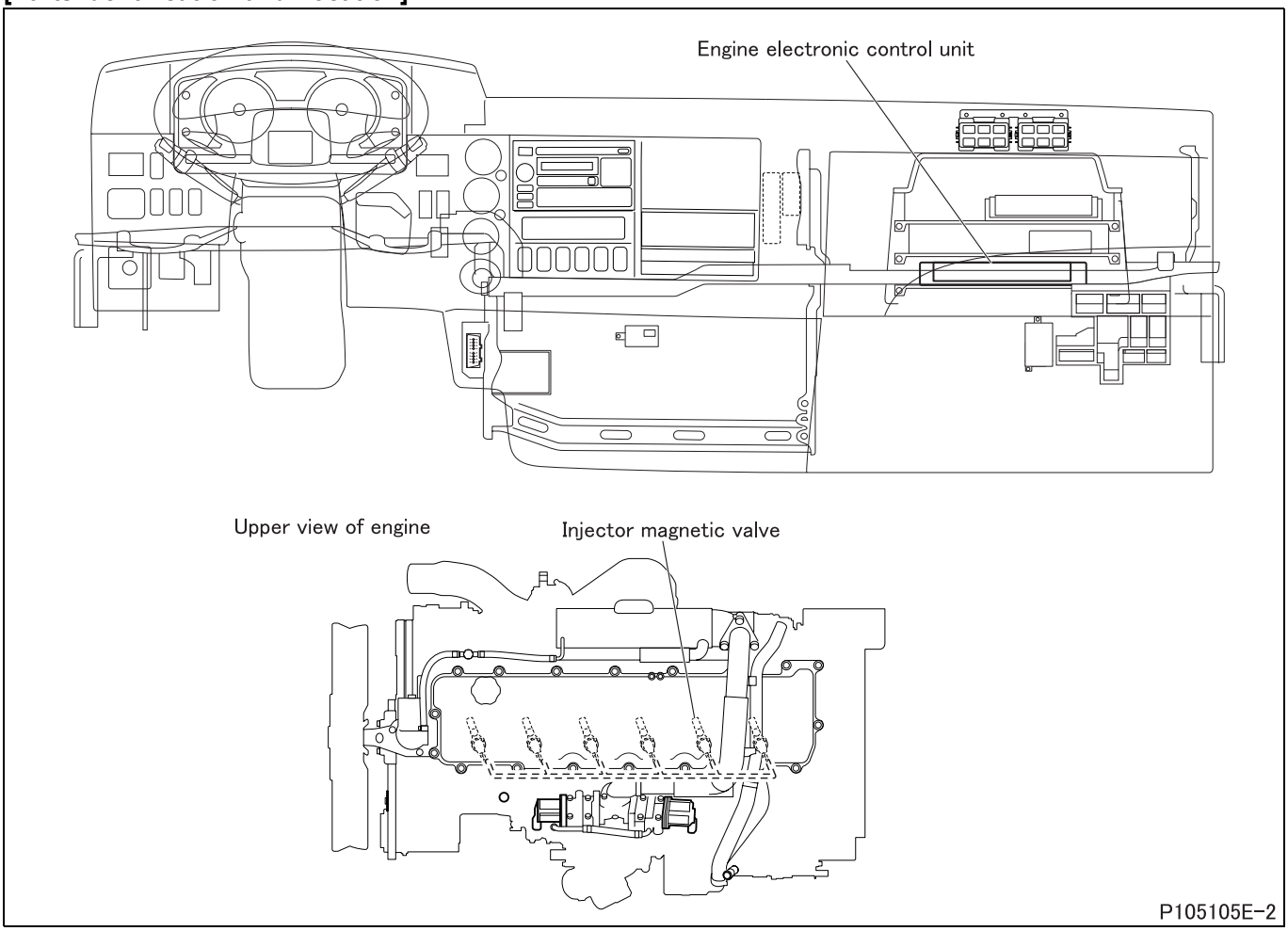

[Fault diagnosis]

- Perform checks in the sequence of the following steps.

Step 1	Inspection items		Inspection by control data
	Maintenance item		Perform actuator test item No. BC “Injector Test 2”.
	Inspection condition		• Vehicle: stationary (vehicle speed 0 km/h {0 MPH}) • Engine start: At idle • Transmission: neutral • The current diagnosis code does not occur.
	Requirements		Injector (No. 5 cylinder) is stopped during actuator test with engine changed in operating condition (vibrating).
	Inspection result (Is the judging standard satisfied?)	YES	Go to transient fault (See Gr00.).
		NO	Go to step 2.

Step 2	Inspection items		Inspection by electronic control unit connector
	Maintenance item		Measure value of resistance between connector (GF31A) terminal No. 1 and 7 or No. 2 and 7.
	Inspection condition		• Disconnect electronic control unit from harness and measure from connection side of harness connector. • Starter switch: ON
	Requirements		0.45 ± 0.1 Ω (20°C {68°F})
	Inspection result (Is the judging standard satisfied?)	YES	Go to step 3.
		NO	Go to step 4.

Step 3	Inspection items		Inspection of electronic control unit connector
	Maintenance item		Inspection of connector
	Inspection condition		–
	Requirements		• Connector is properly connected. • No trace of water entry is found. • No corrosion is found in terminal. • Connection to terminal is appropriate.
	Inspection result (Is the judging standard satisfied?)	YES	Go to step 8.
		NO	Modify connector.

Step 4	Inspection items		Inspection of injector magnetic valve connector
	Maintenance item		Inspection of connector
	Inspection condition		–
	Requirements		• Connector is properly connected. • Connection to terminal is appropriate.
	Inspection result (Is the judging standard satisfied?)	YES	Go to step 5.
		NO	Modify connector.

Step 5	Inspection items		Inspection of injector magnetic valve unit
	Maintenance item		Measure value of resistance between connector terminal No. 1 and 2.
	Inspection condition		–
	Requirements		0.45 ± 0.1 Ω (20°C {68°F})
	Inspection result (Is the judging standard satisfied?)	YES	Go to step 6.
		NO	Replacement of injector

<Step 5 inspection diagram>

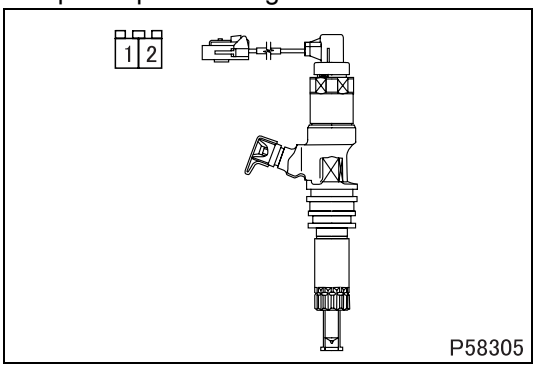

Step 6	Inspection items		Inspection of harness between injector magnetic valve and electronic control unit (power supply)
	Maintenance item		Check circuit between injector magnetic valve connector terminal No. 2 and electronic control unit connector (GF31A) terminal No. 1 or 2.
	Inspection condition		Disconnect electronic control unit from harness and measure from connection side of harness connector.
	Requirements		There is continuity.
	Inspection result (Is the judging standard satisfied?)	YES	Go to step 7.
		NO	Modify harness.

Step 7	Inspection items		Inspection of harness between injector magnetic valve and electronic control unit (ground)
	Maintenance item		Check circuit between injector magnetic valve connector terminal No. 1 and electronic control unit connector (GF31A) terminal No. 7.
	Inspection condition		Disconnect electronic control unit from harness and measure from connection side of harness connector.
	Requirements		There is continuity.
	Inspection result (Is the judging standard satisfied?)	YES	Go to step 8.
		NO	Modify harness.

Step 8	Inspection items		Inspection by control data
	Maintenance item		Perform actuator test item No. BC “Injector Test 2”.
	Inspection condition		• Vehicle: stationary (vehicle speed 0 km/h {0 MPH}) • Engine start: At idle • Transmission: neutral • The current diagnosis code does not occur.
	Requirements		Injector (No. 5 cylinder) is stopped during actuator test with engine changed in operating condition (vibrating).
	Inspection result (Is the judging standard satisfied?)	YES	Go to transient fault (See Gr00.).
		NO	Replacement of electronic control unit

[Fault code]
Diagnosis code: P0206/Flash code: 47
[Monitor]
Abnormality of injector magnetic valve (No. 6 cylinder)
[Fault (outline)]
Injector open circuit (No. 6 cylinder)
[Diagnosis check]
- Injector magnetic valve (No. 6 cylinder) circuit is monitored for fault.

[Code generation condition]
- Open-circuit of injector magnetic valve (No. 6 cylinder) is detected.
  (Warning lamp is lit and diagnosis code is displayed on first establishment of code generation condition.)

[Diagnosis check timing]
- When code generation condition is established after starter switch ON

[Diagnostic requirement]
- 2 seconds passed after starter switch ON
- 2 seconds passed after cranking
- Battery voltage: normal
- Injection time command: available
- Injector charge circuit: ON
- Post injection: none
- Engine speed sensor: normal
- Sub CPU in engine electronic control unit: normal

[Control effected by electronic control unit during fault]
- No injection in abnormal cylinder (other cylinders are limited in injection quantity)
- Exhaust gas recirculation control is stopped.
- Throttle control is stopped.
- Diesel particulate filter regeneration (manual or automatic) is stopped.
- Auto cruise control is stopped.
- Learning of FCCB (fuel control cylinder balance) is inhibited.

[Probable cause of trouble]
- Open-circuit or short-circuit of harness between electronic control unit and injector magnetic valve (No. 6 cylinder)
- Abnormality of each connector
- Abnormality of injector magnetic valve (No. 6 cylinder)
- Abnormality in electronic control unit

[Recoverability]
<Control during fault>
- Recovered if signal becomes normal with starter switch in ON position.

<Warning lamp>
- Extinguished at 4th driving cycle after normal signal is input.

<Fault code>
- Automatically cleared at 40th warm up cycle after warning lamp is extinguished. (To clear as desired, erase from the memory.)

Driving cycle : “Starter switch ON to start engine till starter switch OFF” constitutes 1 driving cycle.
Warm up cycle : “Starter switch ON to start engine till starter switch OFF after coolant temperature increased and engine warmed up” constitutes 1 warm up cycle.

[Electronic Control Unit Connection Diagram]

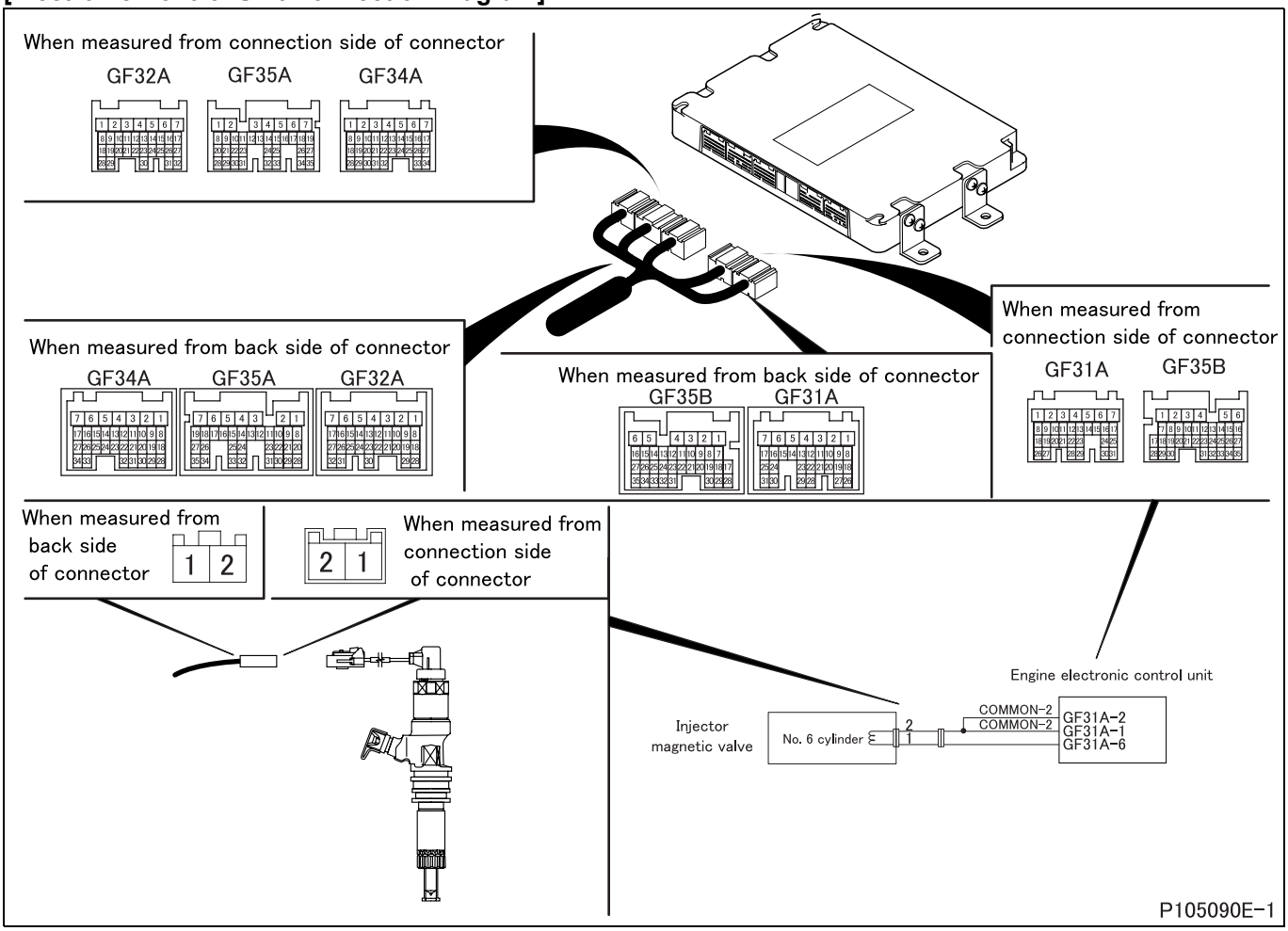

[Parts Identification and Location]

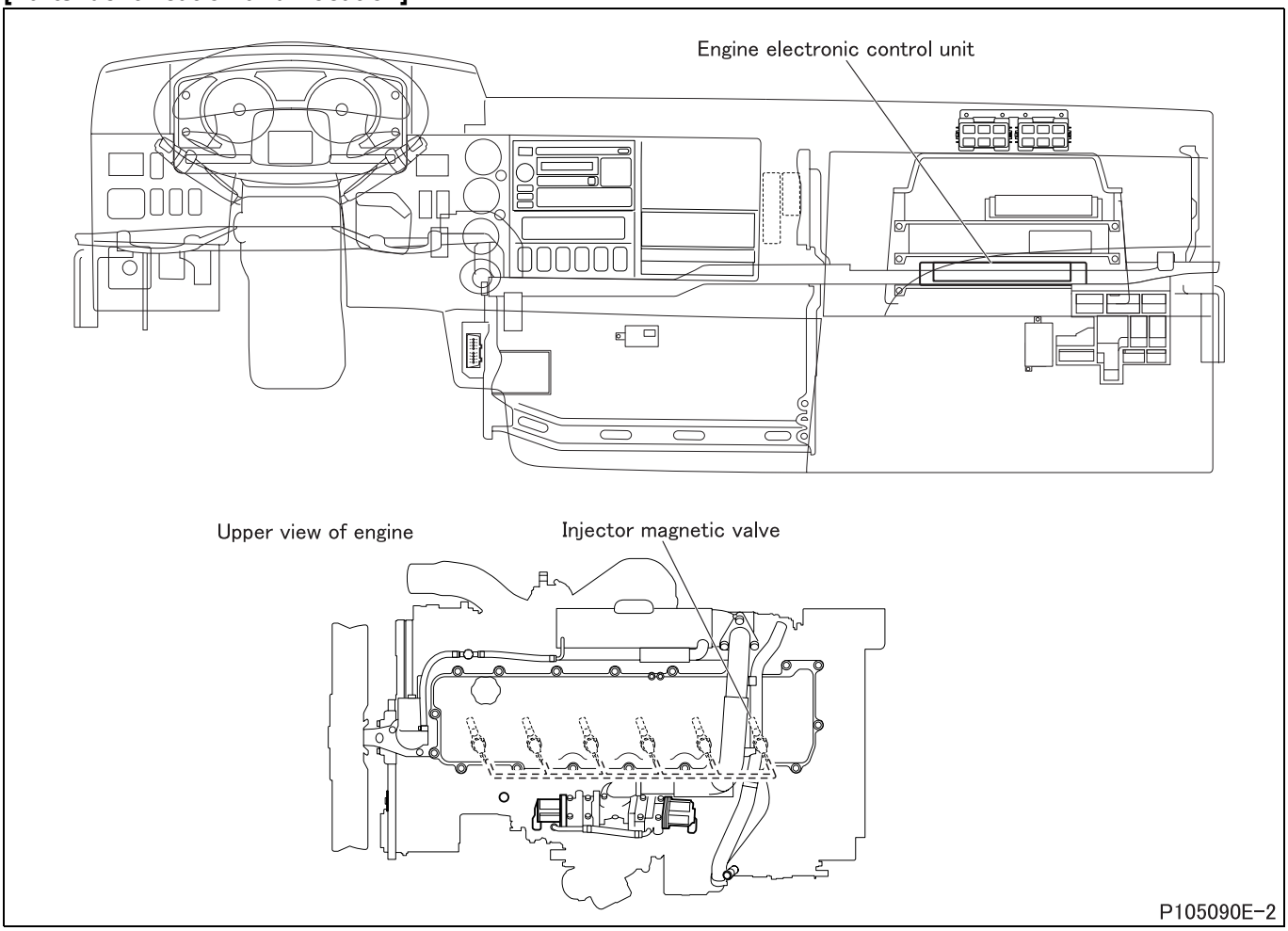

[Fault diagnosis]

- Perform checks in the sequence of the following steps.

Step 1	Inspection items		Inspection by control data
	Maintenance item		• Perform actuator test item No. BE “Injector Test 4”.
	Inspection condition		• Vehicle: stationary (vehicle speed 0 km/h {0 MPH}) • Engine start: At idle • Transmission: neutral • The current diagnosis code does not occur.
	Requirements		Injector (No. 6 cylinder) is stopped during actuator test with engine changed in operating condition (vibrating).
	Inspection result (Is the judging standard satisfied?)	YES	Go to transient fault (See Gr00.).
		NO	Go to step 2.

Step 2	Inspection items		Inspection by electronic control unit connector
	Maintenance item		Measure value of resistance between connector (GF31A) terminal No. 1 and 6 or No. 2 and 6.
	Inspection condition		• Disconnect electronic control unit from harness and measure from connection side of harness connector. • Starter switch: ON
	Requirements		0.45 ± 0.1 Ω (20°C {68°F})
	Inspection result (Is the judging standard satisfied?)	YES	Go to step 3.
		NO	Go to step 4.

Step 3	Inspection items		Inspection of electronic control unit connector
	Maintenance item		Inspection of connector
	Inspection condition		–
	Requirements		• Connector is properly connected. • No trace of water entry is found. • No corrosion is found in terminal. • Connection to terminal is appropriate.
	Inspection result (Is the judging standard satisfied?)	YES	Go to step 8.
		NO	Modify connector.

Step 4	Inspection items		Inspection of injector magnetic valve connector
	Maintenance item		Inspection of connector
	Inspection condition		–
	Requirements		• Connector is properly connected. • Connection to terminal is appropriate.
	Inspection result (Is the judging standard satisfied?)	YES	Go to step 5.
		NO	Modify connector.

Step 5	Inspection items		Inspection of injector magnetic valve unit
	Maintenance item		Measure value of resistance between connector terminal No. 1 and 2.
	Inspection condition		–
	Requirements		0.45 ± 0.1 Ω (20°C {68°F})
	Inspection result (Is the judging standard satisfied?)	YES	Go to step 6.
		NO	Replacement of injector

<Step 5 inspection diagram>

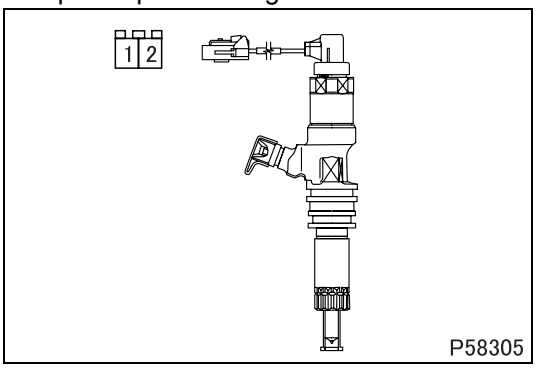

Step 6	Inspection items		Inspection of harness between injector magnetic valve and electronic control unit (power supply)
	Maintenance item		Check circuit between injector magnetic valve connector terminal No. 2 and electronic control unit connector (GF31A) terminal No. 1 or 2.
	Inspection condition		Disconnect electronic control unit from harness and measure from connection side of harness connector.
	Requirements		There is continuity.
	Inspection result (Is the judging standard satisfied?)	YES	Go to step 7.
		NO	Modify harness.

Step 7	Inspection items		Inspection of harness between injector magnetic valve and electronic control unit (ground)
	Maintenance item		Check circuit between injector magnetic valve connector terminal No. 1 and electronic control unit connector (GF31A) terminal No. 6.
	Inspection condition		Disconnect electronic control unit from harness and measure from connection side of harness connector.
	Requirements		There is continuity.
	Inspection result (Is the judging standard satisfied?)	YES	Go to step 8.
		NO	Modify harness.

Step 8	Inspection items		Inspection by control data
	Maintenance item		Perform actuator test item No. BE “Injector Test 4”.
	Inspection condition		• Vehicle: stationary (vehicle speed 0 km/h {0 MPH}) • Engine start: At idle • Transmission: neutral • The current diagnosis code does not occur.
	Requirements		Injector (No. 6 cylinder) is stopped during actuator test with engine changed in operating condition (vibrating).
	Inspection result (Is the judging standard satisfied?)	YES	Go to transient fault (See Gr00.).
		NO	Replacement of electronic control unit

[Fault code]
Diagnosis code: P0219/Flash code: 07
[Monitor]
Engine overrun
[Fault (outline)]
High signal range check
[Diagnosis check]
- Engine speed is monitored for abnormal increase (overrun).

[Code generation condition]
- Engine speed remains higher than 3400 rpm for approx. 0.064 second.
  (Warning lamp is lit and diagnosis code is displayed on first establishment of code generation condition.)

[Diagnosis check timing]
- When code generation condition is established after starter switch ON

[Diagnostic requirement]
- Starter switch: ON

[Control effected by electronic control unit during fault]
- Common rail system is stopped. (Injection quantity control is stopped.)

[Probable cause of trouble]
- Mistake of shifting
- Abnormality in electronic control unit

[Recoverability]
<Control during fault>
- Recovered if engine speed is 3250 rpm or less.

<Warning lamp>
- Extinguished after input of normal signal.

<Fault code>
- If code recovered to normal, automatically cleared at 40th warm up cycle after warning lamp is lit. (To clear as desired, erase from the memory.)

Warm up cycle : “Starter switch ON to start engine till starter switch OFF after coolant temperature increased and engine warmed up” constitutes 1 warm up cycle.

[Fault diagnosis]
- Perform checks in the sequence of the following step.

Step 1	Inspection items		Inspection by control data
	Maintenance item		Check if this diagnosis code occurs except in red zone.
	Inspection condition		• Starter switch: ON • Engine start (condition except in red zone)
	Requirements		Replacement of electronic control unit (Electronic control unit is checked for engine revolution pulse recognition under code generation condition. In the case of erroneous recognition (overspeed recognition), it should be an impact of engine speed sensor. (Engine speed sensor gap is increased to determine its impact resulting in code generation.) Otherwise, electronic control unit is replaced.)
	Inspection result (Is the judging standard satisfied?)	YES	Replacement of electronic control unit
		NO	–

[Fault code]
Diagnosis code: P0222/Flash code: 16
[Monitor]
Abnormality of accelerator pedal position sensor 2
[Fault (outline)]
Low signal range check
[Diagnosis check]
- Output voltage of accelerator pedal position sensor 2 is monitored.

[Code generation condition]
- Voltage of accelerator pedal position sensor 2 remains below 0.5 V for approx. 1 second.
  (Warning lamp is lit and diagnosis code is displayed on first establishment of code generation condition.)

[Diagnosis check timing]
- When code generation condition is established after starter switch ON

[Diagnostic requirement]
- 2 seconds passed after starter switch ON
- 2 seconds passed after cranking
- Battery voltage: normal

[Control effected by electronic control unit during fault]
- Control is carried out using output from accelerator pedal position sensor 1.
- When sensor 1 and 2 malfunctions, control is effected with accelerator pedal judged released from foot pressure.

[Probable cause of trouble]
- Open-circuit or short-circuit of harness between electronic control unit and accelerator pedal position sensor 2
- Abnormality of each connector
- Abnormality of accelerator pedal position sensor 2
- Abnormality in electronic control unit

[Recoverability]
<Control during fault>
- Recovered if signal becomes normal with starter switch in ON position.

<Warning lamp>
- Extinguished at 4th driving cycle after normal signal is input.

<Fault code>
- Automatically cleared at 40th warm up cycle after warning lamp is extinguished. (To clear as desired, erase from the memory.)

Driving cycle : “Starter switch ON to start engine till starter switch OFF” constitutes 1 driving cycle.
Warm up cycle : “Starter switch ON to start engine till starter switch OFF after coolant temperature increased and engine warmed up” constitutes 1 warm up cycle.

[Electronic Control Unit Connection Diagram]

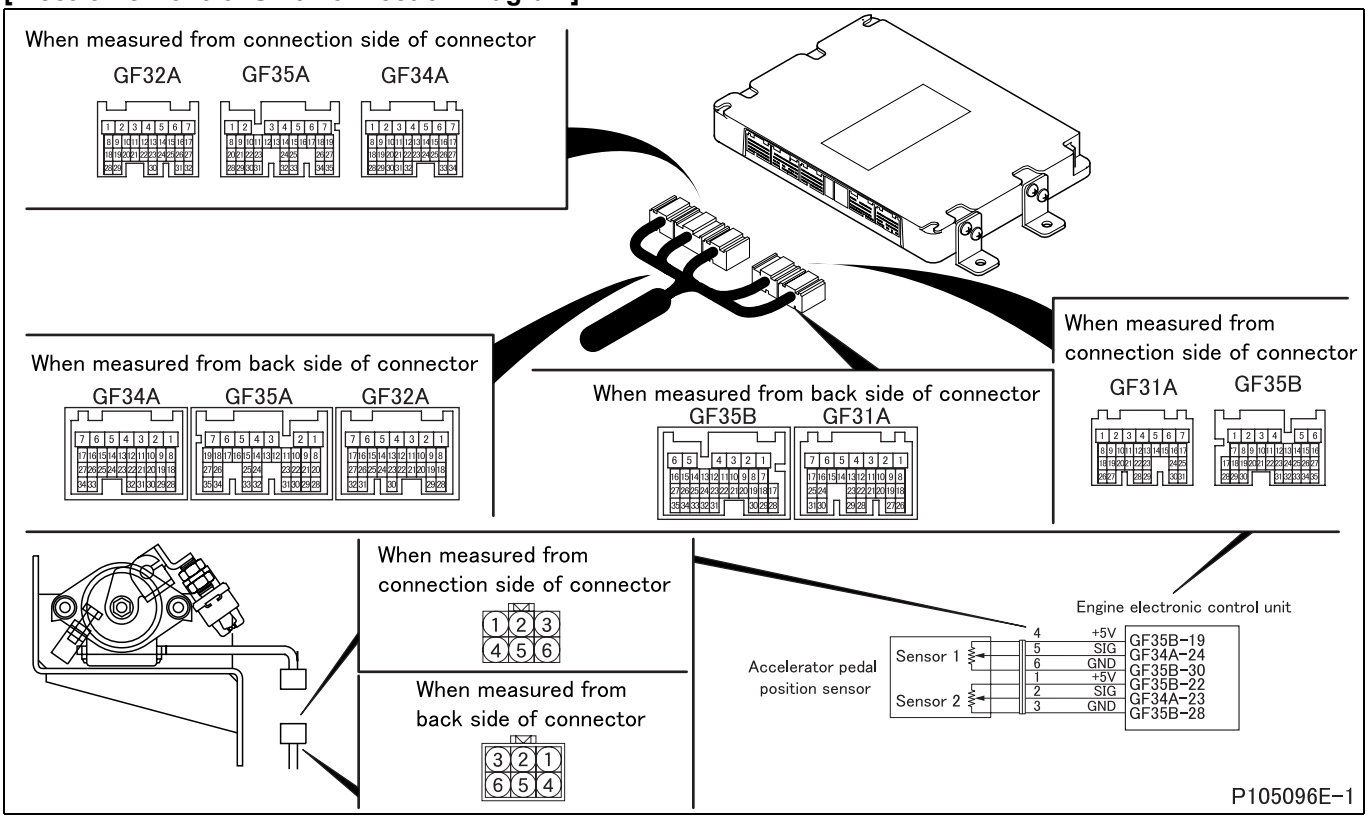

[Parts Identification and Location]

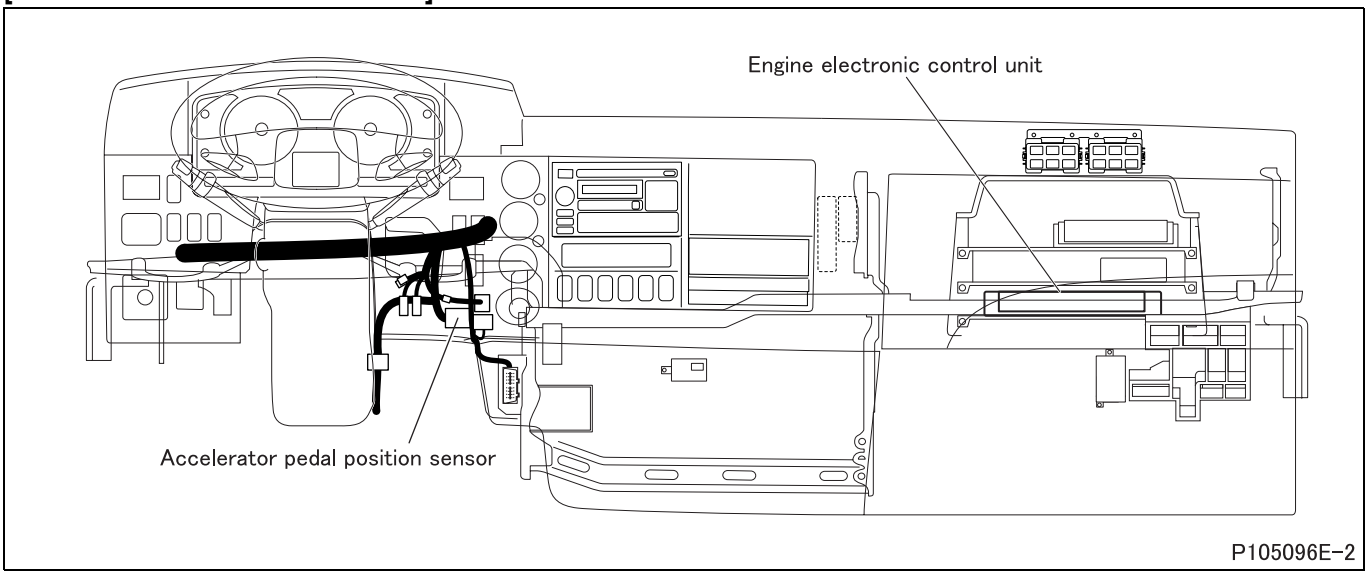

[Fault diagnosis]

- Perform checks in the sequence of the following steps.

Step 1	Inspection items		Inspection by control data
	Maintenance item		**<General Scanning Tool used>** • Measure item “Accelerator Pedal Position 2”. **<Multi-Use Tester used>** • Measure item No. 25 “Accel Pedal Sensor Voltage 2” of Service Data.
	Inspection condition		–
	Requirements		**<General Scanning Tool used>** • Accelerator pedal not pressed: 0% • Accelerator pedal pressed: 100% **<Multi-Use Tester used>** • Accelerator pedal not pressed: 0.85 ± 0.1 V • Accelerator pedal pressed: 4.15 ± 0.1 V
	Inspection result (Is the judging standard satisfied?)	YES	Go to transient fault (See Gr00.).
		NO	Go to step 2.

Step 2	Inspection items		Inspection by electronic control unit connector (signal)
	Maintenance item		Measure value of voltage between connector (GF34A) terminal No. 23 (+) and (GF35B) terminal No. 28 (–).
	Inspection condition		• Starter switch: ON • Engine is stopped. • Measure from back side of connector of harness with each device connected to harness.
	Requirements		• Accelerator pedal not pressed: 0.85 ± 0.1 V • Accelerator pedal pressed: 4.15 ± 0.1 V
	Inspection result (Is the judging standard satisfied?)	YES	Go to step 5.
		NO	Go to step 3.

Step 3	Inspection items		Inspection by electronic control unit connector (power supply)
	Maintenance item		Measure value of voltage between connector (GF35B) terminal No. 22 (+) and No. 28 (–).
	Inspection condition		• Starter switch: ON • Engine is stopped. • Measure from back side of connector of harness with each device connected to harness.
	Requirements		5 V
	Inspection result (Is the judging standard satisfied?)	YES	Go to step 4.
		NO	Go to step 5.

Step 4	Inspection items		Inspection by electronic control unit connector (ground)
	Maintenance item		Measure value of voltage between connector (GF35B) terminal No. 28 (+) and (GF31A) terminal No. 3 (–).
	Inspection condition		• Starter switch: ON • Engine is stopped. • Measure from back side of connector of harness with each device connected to harness.
	Requirements		0 V
	Inspection result (Is the judging standard satisfied?)	YES	Go to step 6.
		NO	Go to step 5.

Step 5	Inspection items		Inspection of electronic control unit connector
	Maintenance item		Inspection of connector
	Inspection condition		–
	Requirements		• Connector is properly connected. • No trace of water entry is found. • No corrosion is found in terminal. • Connection to terminal is appropriate.
	Inspection result (Is the judging standard satisfied?)	YES	Go to step 12.
		NO	Modify connector.

Step 6	Inspection items		Inspection of sensor connector
	Maintenance item		Inspection of connector
	Inspection condition		–
	Requirements		• Connector is properly connected. • No trace of water entry is found. • No corrosion is found in terminal. • Connection to terminal is appropriate.
	Inspection result (Is the judging standard satisfied?)	YES	Go to step 7.
		NO	Modify connector.

Step 7	Inspection items		Inspection of accelerator pedal position sensor 2 unit
	Maintenance item		Measure value of voltage between connector terminal No. 2 (+) and 3 (–).
	Inspection condition		Apply voltage DC 5 V across connector terminals No. 1 (+) and 3 (–).

	Requirements		• Idle position A: 0.85 ± 0.1 V
			• Accelerator pedal switch operating position B: 1.0 ± 0.2 V
			• Full load position C: 4.15 ± 0.1 V
			  • A: When accelerator lever fully presses accelerator pedal switch.
			  • B: When accelerator pedal is pressed until there is no continuity between accelerator pedal switch connector terminals 1 and 2.
			  • C: When accelerator lever is in contact with full load stopper bolt.

	Inspection result (Is the judging standard satisfied?)	YES	Go to step 8.
		NO	Adjustment of sensor (If the measurement deviates from the standard value after adjustment, replace the sensor.) (See “INSPECTION OF ELECTRICAL EQUIPMENT” – “Inspection of accelerator pedal position sensor”.)

<Step 7 inspection diagram>

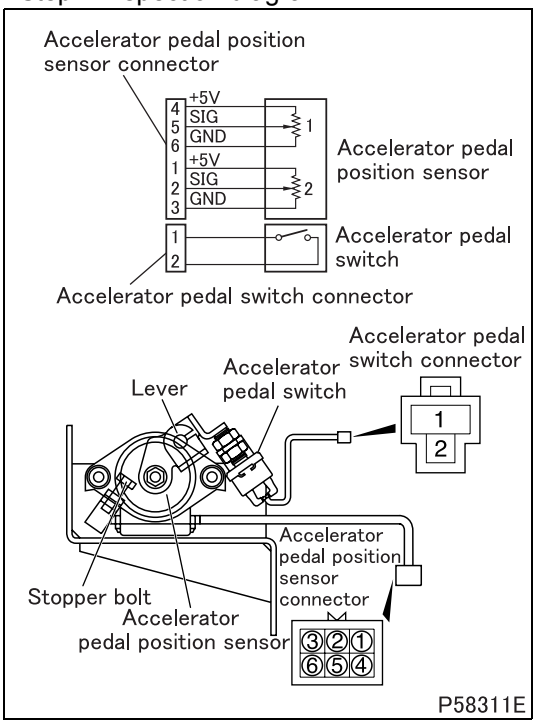

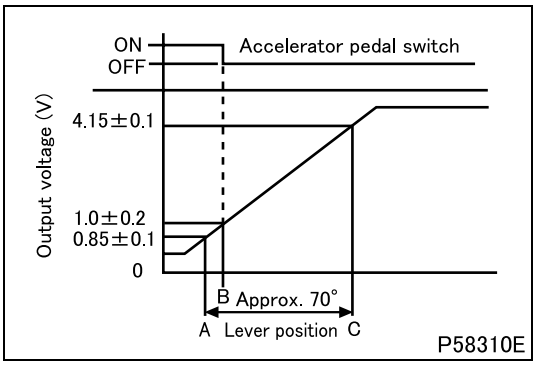

Step 8	Inspection items		Inspection by sensor connector
	Maintenance item		Measure value of voltage between connector terminal No. 1 (+) and 3 (–).
	Inspection condition		• Starter switch: ON • Engine is stopped. • Measure from back side of connector of harness with each device connected to harness.
	Requirements		5 V
	Inspection result (Is the judging standard satisfied?)	YES	Go to step 10.
		NO	Go to step 9.

Step 9	Inspection items		Inspection of harness between electronic control unit and sensor (power supply)
	Maintenance item		Check circuit between electronic control unit connector (GF35B) terminal No. 22 and sensor connector terminal No. 1.
	Inspection condition		Disconnect each device from harness and measure from connection side of harness connector.
	Requirements		There is continuity.
	Inspection result (Is the judging standard satisfied?)	YES	Go to step 12.
		NO	Modify harness.

Step 10	Inspection items		Inspection of harness between electronic control unit and sensor (ground)
	Maintenance item		Check circuit between electronic control unit connector (GF35B) terminal No. 28 and sensor connector terminal No. 3.
	Inspection condition		Disconnect each device from harness and measure from connection side of harness connector.
	Requirements		There is continuity.
	Inspection result (Is the judging standard satisfied?)	YES	Go to step 11.
		NO	Modify harness.

Step 11	Inspection items		Inspection of harness between electronic control unit and sensor (signal)
	Maintenance item		Check circuit between electronic control unit connector (GF34A) terminal No. 23 and sensor connector terminal No. 2.
	Inspection condition		Disconnect each device from harness and measure from connection side of harness connector.
	Requirements		There is continuity.
	Inspection result (Is the judging standard satisfied?)	YES	Go to step 12.
		NO	Modify harness.

Step 12	Inspection items		Inspection by control data
	Maintenance item		**<General Scanning Tool used>** • Measure item “Accelerator Pedal Position 2”. **<Multi-Use Tester used>** • Measure item No. 25 “Accel Pedal Sensor Voltage 2” of Service Data.
	Inspection condition		–
	Requirements		**<General Scanning Tool used>** • Accelerator pedal not pressed: 0% • Accelerator pedal pressed: 100% **<Multi-Use Tester used>** • Accelerator pedal not pressed: 0.85 ± 0.1 V • Accelerator pedal pressed: 4.15 ± 0.1 V
	Inspection result (Is the judging standard satisfied?)	YES	Go to transient fault (See Gr00.).
		NO	Replacement of electronic control unit

[Fault code]
Diagnosis code: P0223/Flash code: 16
[Monitor]
Abnormality of accelerator pedal position sensor 2
[Fault (outline)]
High signal range check
[Diagnosis check]
- Output voltage of accelerator pedal position sensor 2 is monitored.

[Code generation condition]
- Voltage of accelerator pedal position sensor 2 remains over 4.5 V for approx. 1 second.
  (Warning lamp is lit and diagnosis code is displayed on first establishment of code generation condition.)

[Diagnosis check timing]
- When code generation condition is established after starter switch ON

[Diagnostic requirement]
- 2 seconds passed after starter switch ON
- 2 seconds passed after cranking
- Battery voltage: normal

[Control effected by electronic control unit during fault]
- Control is carried out using output from accelerator pedal position sensor 1.
- When sensor 1 and 2 malfunctions, control is effected with accelerator pedal judged released from foot pressure.

[Probable cause of trouble]
- Open-circuit or short-circuit of harness between electronic control unit and accelerator pedal position sensor 2
- Abnormality of each connector
- Abnormality of accelerator pedal position sensor 2
- Abnormality in electronic control unit

[Recoverability]
<Control during fault>
- Recovered if signal becomes normal with starter switch in ON position.

<Warning lamp>
- Extinguished at 4th driving cycle after normal signal is input.

<Fault code>
- Automatically cleared at 40th warm up cycle after warning lamp is extinguished. (To clear as desired, erase from the memory.)

Driving cycle : “Starter switch ON to start engine till starter switch OFF” constitutes 1 driving cycle.
Warm up cycle : “Starter switch ON to start engine till starter switch OFF after coolant temperature increased and engine warmed up” constitutes 1 warm up cycle.

[Electronic Control Unit Connection Diagram]

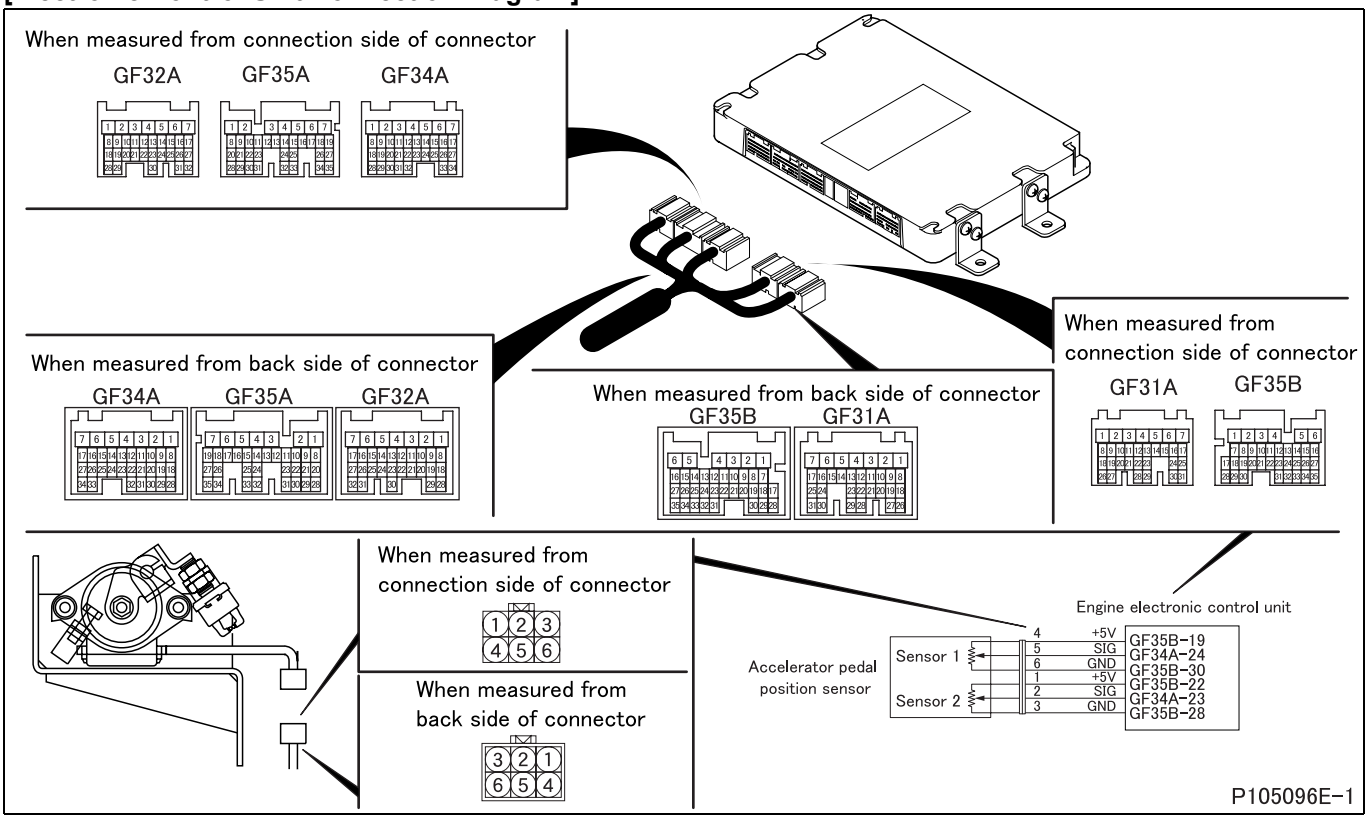

[Parts Identification and Location]

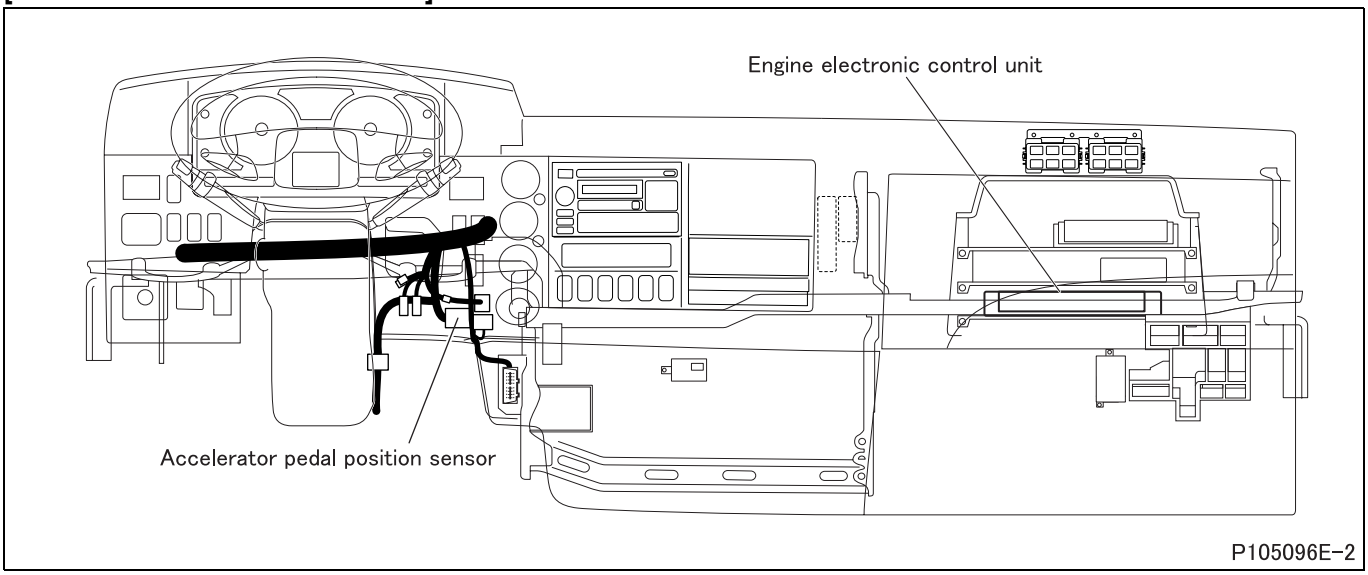

[Fault diagnosis]

- Perform checks in the sequence of the following steps.

Step 1	Inspection items		Inspection by control data
	Maintenance item		**<General Scanning Tool used>** • Measure item “Accelerator Pedal Position 2”. **<Multi-Use Tester used>** • Measure item No. 25 “Accel Pedal Sensor Voltage 2” of Service Data.
	Inspection condition		–
	Requirements		**<General Scanning Tool used>** • Accelerator pedal not pressed: 0% • Accelerator pedal pressed: 100% **<Multi-Use Tester used>** • Accelerator pedal not pressed: 0.85 ± 0.1 V • Accelerator pedal pressed: 4.15 ± 0.1 V
	Inspection result (Is the judging standard satisfied?)	YES	Go to transient fault (See Gr00.).
		NO	Go to step 2.

Step 2	Inspection items		Inspection by electronic control unit connector (signal)
	Maintenance item		Measure value of voltage between connector (GF34A) terminal No. 23 (+) and (GF35B) terminal No. 28 (–).
	Inspection condition		• Starter switch: ON • Engine is stopped. • Measure from back side of connector of harness with each device connected to harness.
	Requirements		• Accelerator pedal not pressed: 0.85 ± 0.1 V • Accelerator pedal pressed: 4.15 ± 0.1 V
	Inspection result (Is the judging standard satisfied?)	YES	Go to step 5.
		NO	Go to step 3.

Step 3	Inspection items		Inspection by electronic control unit connector (power supply)
	Maintenance item		Measure value of voltage between connector (GF35B) terminal No. 22 (+) and No. 28 (–).
	Inspection condition		• Starter switch: ON • Engine is stopped. • Measure from back side of connector of harness with each device connected to harness.
	Requirements		5 V
	Inspection result (Is the judging standard satisfied?)	YES	Go to step 4.
		NO	Go to step 5.

Step 4	Inspection items		Inspection by electronic control unit connector (ground)
	Maintenance item		Measure value of voltage between connector (GF35B) terminal No. 28 (+) and (GF31A) terminal No. 3 (–).
	Inspection condition		• Starter switch: ON • Engine is stopped. • Measure from back side of connector of harness with each device connected to harness.
	Requirements		0 V
	Inspection result (Is the judging standard satisfied?)	YES	Go to step 6.
		NO	Go to step 5.

Step 5	Inspection items		Inspection of electronic control unit connector
	Maintenance item		Inspection of connector
	Inspection condition		–
	Requirements		• Connector is properly connected. • No trace of water entry is found. • No corrosion is found in terminal. • Connection to terminal is appropriate.
	Inspection result (Is the judging standard satisfied?)	YES	Go to step 12.
		NO	Modify connector.

Step 6	Inspection items		Inspection of sensor connector
	Maintenance item		Inspection of connector
	Inspection condition		–
	Requirements		• Connector is properly connected. • No trace of water entry is found. • No corrosion is found in terminal. • Connection to terminal is appropriate.
	Inspection result (Is the judging standard satisfied?)	YES	Go to step 7.
		NO	Modify connector.

Step 7	Inspection items		Inspection of accelerator pedal position sensor 2 unit
	Maintenance item		Measure value of voltage between connector terminal No. 2 (+) and 3 (–).
	Inspection condition		Apply voltage DC 5 V across connector terminals No. 1 (+) and 3 (–).

	Requirements		• Idle position A: 0.85 ± 0.1 V
			• Accelerator pedal switch operating position B: 1.0 ± 0.2 V
			• Full load position C: 4.15 ± 0.1 V
			  • A: When accelerator lever fully presses accelerator pedal switch.
			  • B: When accelerator pedal is pressed until there is no continuity between accelerator pedal switch connector terminals 1 and 2.
			  • C: When accelerator lever is in contact with full load stopper bolt.

	Inspection result (Is the judging standard satisfied?)	YES	Go to step 8.
		NO	Adjustment of sensor (If the measurement deviates from the standard value after adjustment, replace the sensor.) (See “INSPECTION OF ELECTRICAL EQUIPMENT” – “Inspection of accelerator pedal position sensor”.)

<Step 7 inspection diagram>

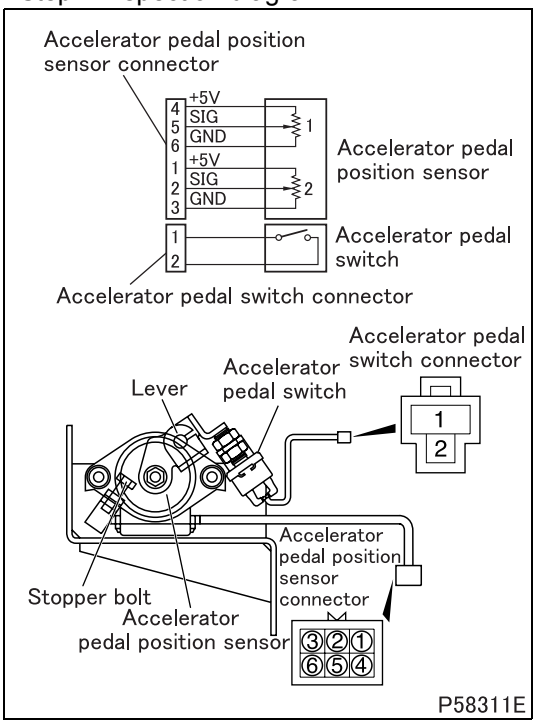

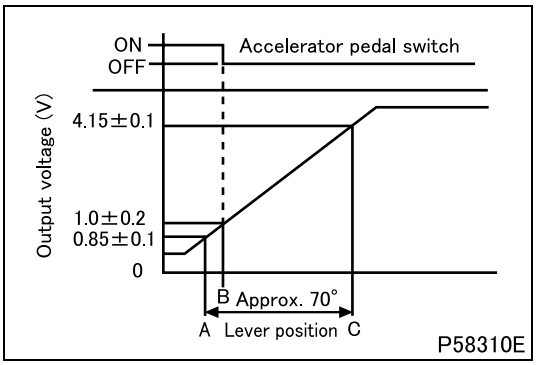

Step 8	Inspection items		Inspection by sensor connector
	Maintenance item		Measure value of voltage between connector terminal No. 1 (+) and 3 (–).
	Inspection condition		• Starter switch: ON • Engine is stopped. • Measure from back side of connector of harness with each device connected to harness.
	Requirements		5 V
	Inspection result (Is the judging standard satisfied?)	YES	Go to step 10.
		NO	Go to step 9.

Step 9	Inspection items		Inspection of harness between electronic control unit and sensor (power supply)
	Maintenance item		Check circuit between electronic control unit connector (GF35B) terminal No. 22 and sensor connector terminal No. 1.
	Inspection condition		Disconnect each device from harness and measure from connection side of harness connector.
	Requirements		There is continuity.
	Inspection result (Is the judging standard satisfied?)	YES	Go to step 12.
		NO	Modify harness.

Step 10	Inspection items		Inspection of harness between electronic control unit and sensor (ground)
	Maintenance item		Check circuit between electronic control unit connector (GF35B) terminal No. 28 and sensor connector terminal No. 3.
	Inspection condition		Disconnect each device from harness and measure from connection side of harness connector.
	Requirements		There is continuity.
	Inspection result (Is the judging standard satisfied?)	YES	Go to step 11.
		NO	Modify harness.

Step 11	Inspection items		Inspection of harness between electronic control unit and sensor (signal)
	Maintenance item		Check circuit between electronic control unit connector (GF34A) terminal No. 23 and sensor connector terminal No. 2.
	Inspection condition		Disconnect each device from harness and measure from connection side of harness connector.
	Requirements		There is continuity.
	Inspection result (Is the judging standard satisfied?)	YES	Go to step 12.
		NO	Modify harness.

Step 12	Inspection items		Inspection by control data
	Maintenance item		**<General Scanning Tool used>** • Measure item “Accelerator Pedal Position 2”. **<Multi-Use Tester used>** • Measure item No. 25 “Accel Pedal Sensor Voltage 2” of Service Data.
	Inspection condition		–
	Requirements		**<General Scanning Tool used>** • Accelerator pedal not pressed: 0% • Accelerator pedal pressed: 100% **<Multi-Use Tester used>** • Accelerator pedal not pressed: 0.85 ± 0.1 V • Accelerator pedal pressed: 4.15 ± 0.1 V
	Inspection result (Is the judging standard satisfied?)	YES	Go to transient fault (See Gr00.).
		NO	Replacement of electronic control unit

[Fault code]
Diagnosis code: P0226/Flash code: 28
[Monitor]
Abnormality of intake throttle (position sensor)
[Fault (outline)]
- Abnormal position
- Abnormal ref voltage

[Diagnosis check]
- Throttle electronic drive unit monitors built-in position sensor of intake throttle for circuit fault and sends abnormality information to engine electronic control unit through controller area network communication.

[Code generation condition]
Diagnosis code is generated under either of the following conditions.
(Warning lamp is lit and diagnosis code is displayed on first establishment of code generation condition.)
- Voltage of position sensor remains out of specification (open: above 4.7 V, close: below 0.2 V) for 1 second.
- Power voltage of position sensor remains below 4.1 V for 1 second.

[Diagnosis check timing]
- When code generation condition is established after starter switch ON

[Diagnostic requirement]
- 2 seconds passed after starter switch ON
- 2 seconds passed after cranking
- Battery voltage: normal

[Control effected by electronic control unit during fault]
- Injection quantity is limited.
- Exhaust gas recirculation control is stopped.
- Throttle control is stopped.
- Diesel particulate filter regeneration (manual or automatic) is stopped.

[Probable cause of trouble]
- Open-circuit or short-circuit of harness between throttle electronic drive unit and throttle actuator
- Abnormality of each connector
- Abnormality of throttle motor (built in throttle actuator)
- Abnormality of throttle position sensor (built in throttle actuator)
- Abnormality of throttle electronic drive unit
- Abnormality in electronic drive unit relay

[Recoverability]
<Control during fault>
- Recovered if signal becomes normal with starter switch in ON position.

<Warning lamp>
- Extinguished at 4th driving cycle after normal signal is input.

<Fault code>
- Automatically cleared at 40th warm up cycle after warning lamp is extinguished. (To clear as desired, erase from the memory.)

Driving cycle : “Starter switch ON to start engine till starter switch OFF” constitutes 1 driving cycle.
Warm up cycle : “Starter switch ON to start engine till starter switch OFF after coolant temperature increased and engine warmed up” constitutes 1 warm up cycle.

[Electronic Control Unit Connection Diagram]

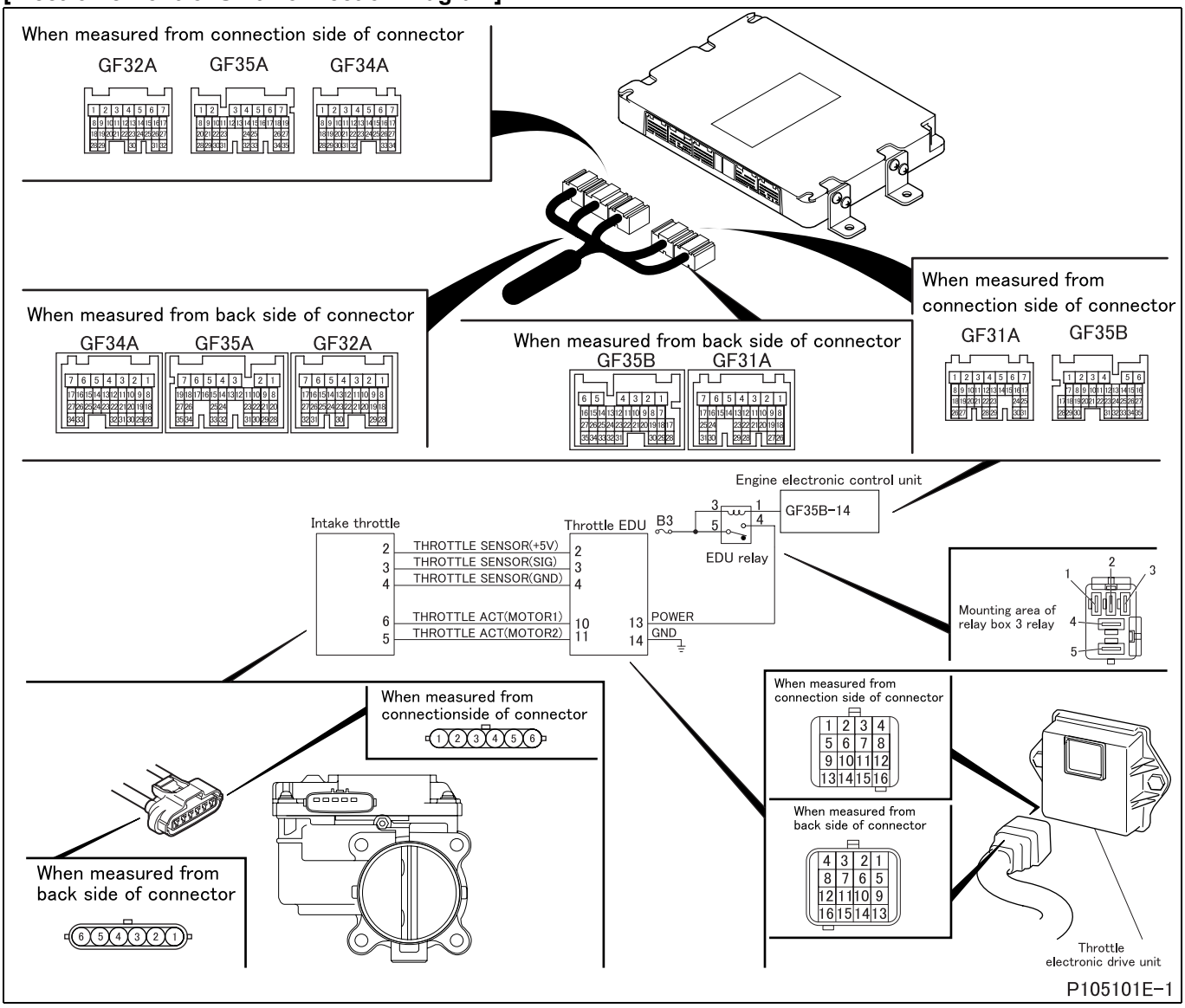

[Parts Identification and Location]

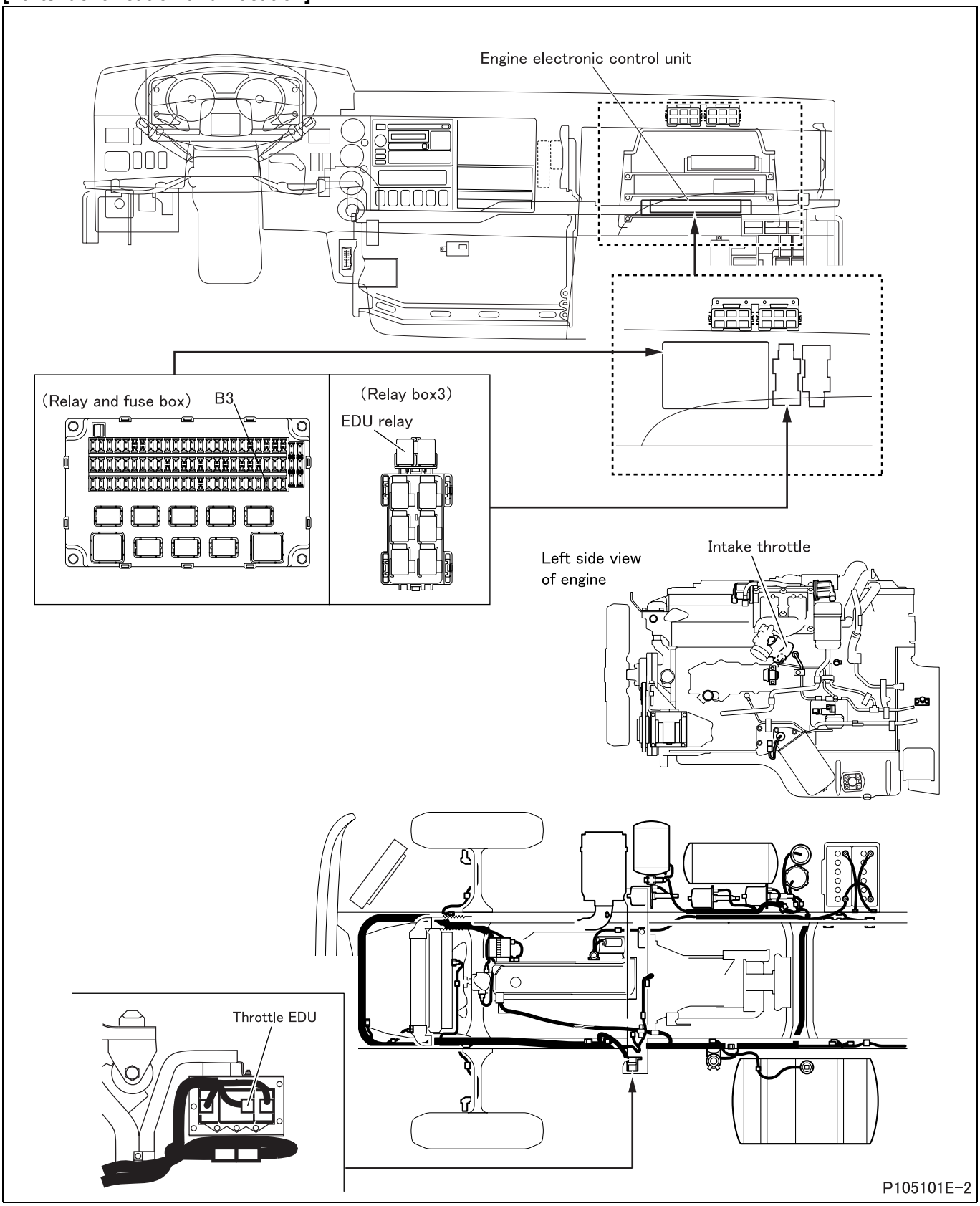

[Fault diagnosis]

- Perform checks in the sequence of the following steps.

Step 1	Inspection items		Inspection by control data
	Maintenance item		Perform actuator test item No. A7 “Intake throttle 1”
	Inspection condition		• Vehicle: stationary (vehicle speed 0 km/h {0 MPH}) • Starter switch: ON (engine started) • Transmission: neutral
	Requirements		Actual position matches with target value set by Multi-Use Tester. (check with service data “20: Intake Throttle actual position”)
	Inspection result (Is the judging standard satisfied?)	YES	Go to transient fault (See Gr00.).
		NO	Go to step 2.

Step 2	Inspection items		Inspection of electronic drive unit connector
	Maintenance item		Inspection of connector
	Inspection condition		–
	Requirements		• Connector is properly connected. • No trace of water entry is found. • No corrosion is found in terminal. • Connection to terminal is appropriate.
	Inspection result (Is the judging standard satisfied?)	YES	Go to step 3.
		NO	Modify connector.

Step 3	Inspection items		Inspection of throttle actuator connector
	Maintenance item		Inspection of connector
	Inspection condition		–
	Requirements		• Connector is properly connected. • No trace of water entry is found. • No corrosion is found in terminal. • Connection to terminal is appropriate.
	Inspection result (Is the judging standard satisfied?)	YES	Go to step 4.
		NO	Modify connector.

Step 4	Inspection items		Inspection by control data
	Maintenance item		Check if following diagnosis codes occur simultaneously. • P0685 “EDU Relay (Open)” • P0686 “EDU Relay (Low)” • P0687 “EDU Relay (High)” • P0688 “EDU Relay (Over Load)”
	Inspection condition		Starter switch: ON
	Requirements		Codes occur.
	Inspection result (Is the judging standard satisfied?)	YES	Inspect diagnosis code that is occurring.
		NO	Go to step 5.

Step 5	Inspection items		Inspection of electronic drive unit connector (power supply)
	Maintenance item		Measure value of voltage between connector terminal No. 13 (+) and 14 (–).
	Inspection condition		• Remove connector and measure from harness side. • Starter switch: ON • Perform actuator test item No. A9 “EDU Relay”
	Requirements		Same as battery voltage.
	Inspection result (Is the judging standard satisfied?)	YES	Go to step 10.
		NO	Go to step 6.

Step 6	Inspection items		Inspection of relay connector
	Maintenance item		Inspection of connector
	Inspection condition		–
	Requirements		• Connector is properly connected. • No trace of water entry is found. • No corrosion is found in terminal. • Connection to terminal is appropriate.
	Inspection result (Is the judging standard satisfied?)	YES	Go to step 7.
		NO	Modify connector.

Step 7	Inspection items		Inspection of harness between fuse and relay
	Maintenance item		Check circuit between fuse No. B3 and relay connector terminal No. 5
	Inspection condition		Disconnect each device from harness and measure from connection side of harness connector.
	Requirements		There is continuity.
	Inspection result (Is the judging standard satisfied?)	YES	Go to step 8.
		NO	Modify harness.

Step 8	Inspection items		Inspection of harness between relay and electronic drive unit
	Maintenance item		Check circuit between relay connector terminal No. 4 and electronic drive unit connecter terminal No. 13
	Inspection condition		Disconnect each device from harness and measure from connection side of harness connector.
	Requirements		There is continuity.
	Inspection result (Is the judging standard satisfied?)	YES	After replacement of relay, go to step 9.
		NO	Modify harness.

Step 9	Inspection items		Inspection of harness between electronic drive unit and ground
	Maintenance item		Check circuit between following electronic drive unit connector terminals • Electronic drive unit ground: terminal No. 14 - chassis ground • Sensor ground: terminal No. 4–14
	Inspection condition		Disconnect each device from harness and measure from connection side of harness connector.
	Requirements		There is continuity.
	Inspection result (Is the judging standard satisfied?)	YES	Go to step 10.
		NO	Modify harness.

Step 10	Inspection items		Inspection of electronic drive unit connector (motor)
	Maintenance item		Measure value of resistance between connector terminal No. 10 and 11.
	Inspection condition		Remove connector and measure from harness side.
	Requirements		0.3 to 80 Ω
	Inspection result (Is the judging standard satisfied?)	YES	Go to step 13.
		NO	Go to step 11.

Step 11	Inspection items		Inspection of harness between electronic drive unit and throttle actuator (motor)
	Maintenance item		Check circuit between following connector terminals. • Motor (1): electronic drive unit connector terminal No. 10 - throttle actuator connector terminal No. 6 • Motor (2): electronic drive unit connector terminal No. 11 - throttle actuator connector terminal No. 5
	Inspection condition		Disconnect each device from harness and measure from connection side of harness connector.
	Requirements		There is continuity.
	Inspection result (Is the judging standard satisfied?)	YES	Go to step 12.
		NO	Modify harness.

Step 12	Inspection items		Inspection of throttle actuator unit (motor)
	Maintenance item		Measure value of resistance between connector terminal No. 5 and 6.
	Inspection condition		• Keep throttle actuator installed on vehicle. • Remove connector, and measure throttle actuator side.
	Requirements		0.3 to 80 Ω
	Inspection result (Is the judging standard satisfied?)	YES	Go to step 13.
		NO	Replacement of throttle actuator

<Step 12 inspection diagram>

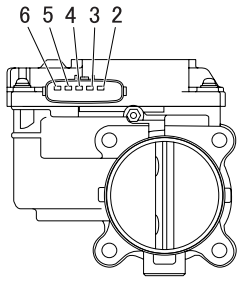

P104212

Step 13	Inspection items		Inspection of throttle actuator connector (position sensor: power supply)
	Maintenance item		Measure value of voltage between connector terminal No. 2 (+) and 4 (–).
	Inspection condition		• Measure from back side of connector of harness with each device connected to harness. • Starter switch: ON
	Requirements		5 V
	Inspection result (Is the judging standard satisfied?)	YES	Go to step 14.
		NO	Go to step 15.

Step 14	Inspection items		Inspection of electronic drive unit connector (position sensor: signal)
	Maintenance item		Measure value of voltage between connector terminal No. 3 (+) and 4 (–).
	Inspection condition		• Measure from back side of connector of harness with each device connected to harness. • Starter switch: ON • Perform actuator test item No. A7 “Intake throttle 1”
	Requirements		• Valve fully closed: 0.5 V • Valve fully opened: 4.375 V
	Inspection result (Is the judging standard satisfied?)	YES	Go to step 16.
		NO	Go to step 15.

Step 15	Inspection items		Inspection of harness between electronic drive unit and throttle actuator (position sensor)
	Maintenance item		Check circuit between following connector terminals. • Sensor (power supply): electronic drive unit connector terminal No. 2 - throttle actuator connector terminal No. 2 • Sensor (signal): electronic drive unit connector terminal No. 3 - throttle actuator connector terminal No. 3 • Sensor (ground): electronic drive unit connector terminal No. 4 - throttle actuator connector terminal No. 4
	Inspection condition		Disconnect each device from harness and measure from connection side of harness connector.
	Requirements		There is continuity.
	Inspection result (Is the judging standard satisfied?)	YES	After replacement of throttle actuator, go to step 16.
		NO	Modify harness.

Step 16	Inspection items		Inspection by control data
	Maintenance item		Perform actuator test item No. A7 “Intake throttle 1”
	Inspection condition		• Vehicle: stationary (vehicle speed 0 km/h {0 MPH}) • Starter switch: ON (engine started) • Transmission: neutral
	Requirements		Actual position matches with target value set by Multi-Use Tester. (check with service data “20: Intake Throttle actual position”)
	Inspection result (Is the judging standard satisfied?)	YES	Go to transient fault (See Gr00.).
		NO	Replacement of electronic drive unit

[Fault code]
Diagnosis code: P0227/Flash code: 61
[Monitor]
Abnormality of auxiliary equipment load sensor
[Fault (outline)]
Low signal range check
[Diagnosis check]
- Output voltage of auxiliary equipment load sensor is monitored.

[Code generation condition]
- Voltage of auxiliary equipment load sensor remains below 0.1 V for approx. 1 second when power take-off switch is ON. (Warning lamp is lit and diagnosis code is displayed on first establishment of code generation condition.)

[Diagnosis check timing]
- When code generation condition is established after starter switch ON

[Diagnostic requirement]
- 2 seconds passed after starter switch ON
- 2 seconds passed after cranking
- Battery voltage: normal
- PTO SW: ON

[Control effected by electronic control unit during fault]
–
[Probable cause of trouble]
- Open-circuit or short-circuit of harness between electronic control unit and auxiliary equipment load sensor
- Abnormality of each connector
- Abnormality of auxiliary equipment load sensor
- Abnormality in electronic control unit

[Recoverability]
<Control during fault>
- Recovered if signal becomes normal with starter switch in ON position.

<Warning lamp>
- Extinguished after input of normal signal.

<Fault code>
- If code recovered to normal, automatically cleared at 40th warm up cycle after warning lamp is lit. (To clear as desired, erase from the memory.)

Warm up cycle : “Starter switch ON to start engine till starter switch OFF after coolant temperature increased and engine warmed up” constitutes 1 warm up cycle.

[Electronic Control Unit Connection Diagram]

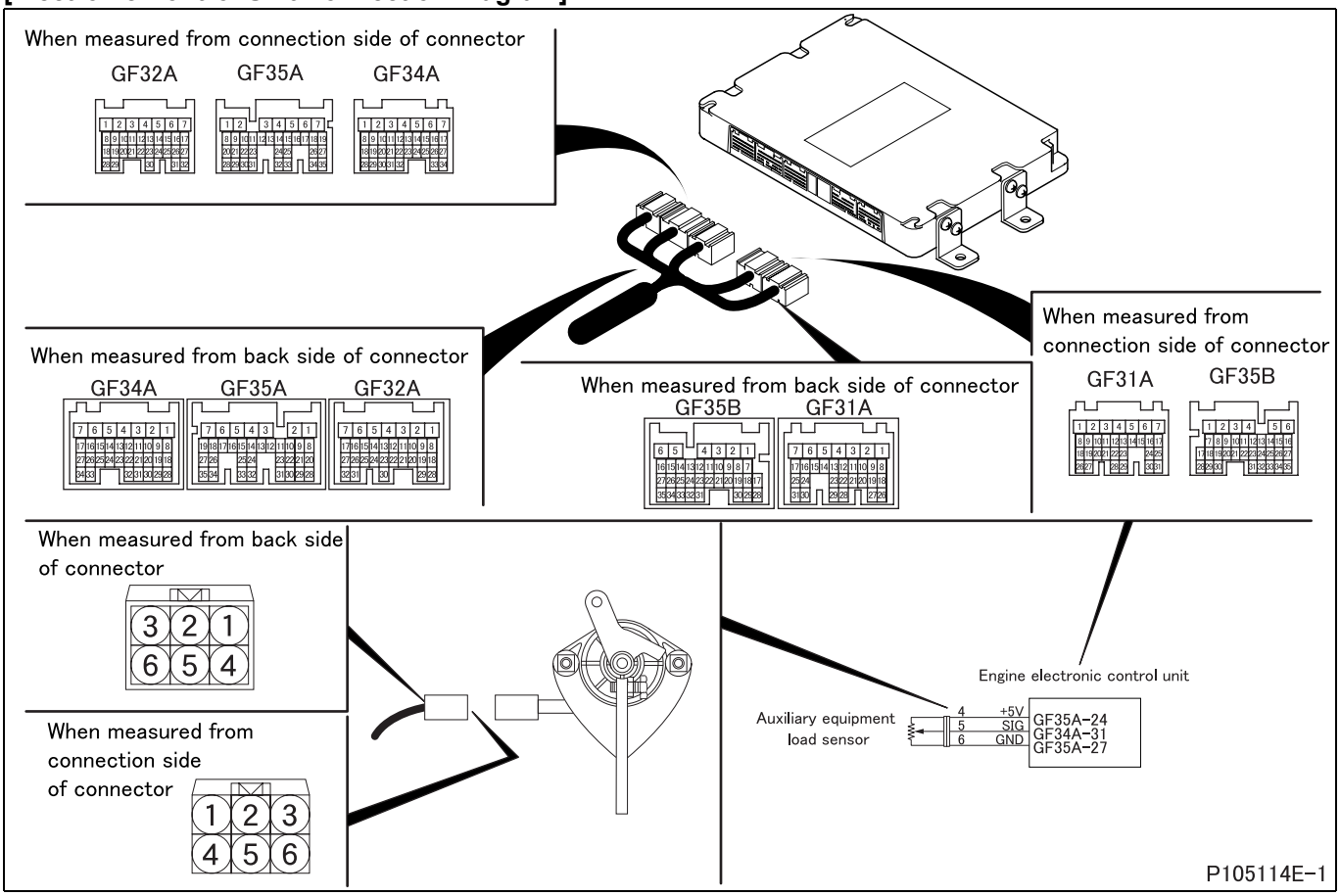

[Parts Identification and Location]

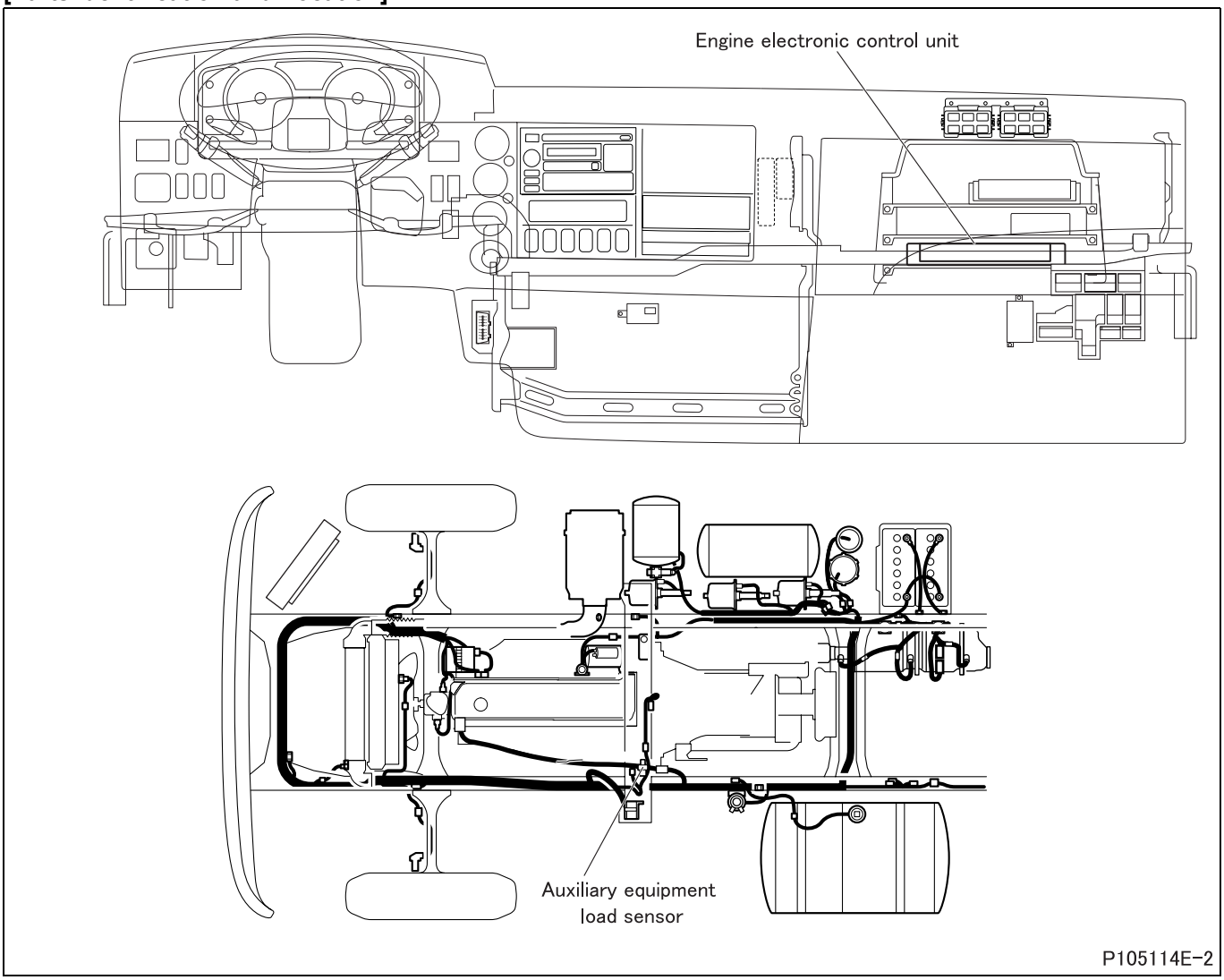

[Fault diagnosis]

- Perform checks in the sequence of the following steps.

Step 1	Inspection items		Inspection by control data
	Maintenance item		• Measure item No. 3F “PTO Accel Position” of Service Data. • Measure item No. 40 “PTO Accel Sensor Voltage” of Service Data.
	Inspection condition		When power take-off is used.
	Requirements		**<Accelerator pedal position>** • MIN to MAX: 0 to 100% **<Sensor voltage>** • MIN to MAX: 1 to 3.0 V
	Inspection result (Is the judging standard satisfied?)	YES	Go to transient fault (See Gr00.).
		NO	Go to step 2.

Step 2	Inspection items		Inspection by electronic control unit connector (signal)
	Maintenance item		Measure value of voltage between connector (GF34A) terminal No. 31 (+) and (GF35A) terminal No. 27 (–).
	Inspection condition		• Starter switch: ON • Engine is stopped. • Measure from back side of harness connector with each device connected to harness.
	Requirements		• Idling position: 0.85 ± 0.1 V • Full-load position: 3.0 ± 0.1 V
	Inspection result (Is the judging standard satisfied?)	YES	Go to step 5.
		NO	Go to step 3.

Step 3	Inspection items		Inspection by electronic control unit connector (power supply)
	Maintenance item		Measure value of voltage between connector (GF35A) terminal No. 24 (+) and (GF35A) terminal No. 27 (–).
	Inspection condition		• Starter switch: ON • Engine is stopped. • Measure from back side of harness connector with each device connected to harness.
	Requirements		5 V
	Inspection result (Is the judging standard satisfied?)	YES	Go to step 4.
		NO	Go to step 5.

Step 4	Inspection items		Inspection by electronic control unit connector (ground)
	Maintenance item		Measure value of voltage between connector (GF35A) terminal No. 27 (+) and (GF31A) terminal No. 3 (–).
	Inspection condition		• Starter switch: ON • Engine is stopped. • Measure from back side of harness connector with each device connected to harness.
	Requirements		0 V
	Inspection result (Is the judging standard satisfied?)	YES	Go to step 6.
		NO	Go to step 5.

Step 5	Inspection items		Inspection of electronic control unit connector
	Maintenance item		Inspection of connector
	Inspection condition		–
	Requirements		• Connector is properly connected. • No trace of water entry is found. • No corrosion is found in terminal. • Connection to terminal is appropriate.
	Inspection result (Is the judging standard satisfied?)	YES	Go to step 12.
		NO	Modify connector.

Step 6	Inspection items		Inspection of sensor connector
	Maintenance item		Inspection of connector
	Inspection condition		–
	Requirements		• Connector is properly connected. • No trace of water entry is found. • No corrosion is found in terminal. • Connection to terminal is appropriate.
	Inspection result (Is the judging standard satisfied?)	YES	Go to step 7.
		NO	Modify connector.

Step 7	Inspection items		Inspection of auxiliary equipment load sensor unit
	Maintenance item		Measure value of voltage between connector terminal No. 5 (+) and 6 (–).
	Inspection condition		Apply voltage DC 5 V across connector terminals No. 4 (+) and 6 (–).
	Requirements		• Idling position A: 0.85 ± 0.1 V • Full-load position B: 3.0 ± 0.1 V
	Inspection result (Is the judging standard satisfied?)	YES	Go to step 8.
		NO	• If measurement of idling position A deviates from standard value: replacement of sensor • If measurement of full-load position B deviates from standard value: adjustment of full load stopper bolt

<Step 7 inspection diagram>

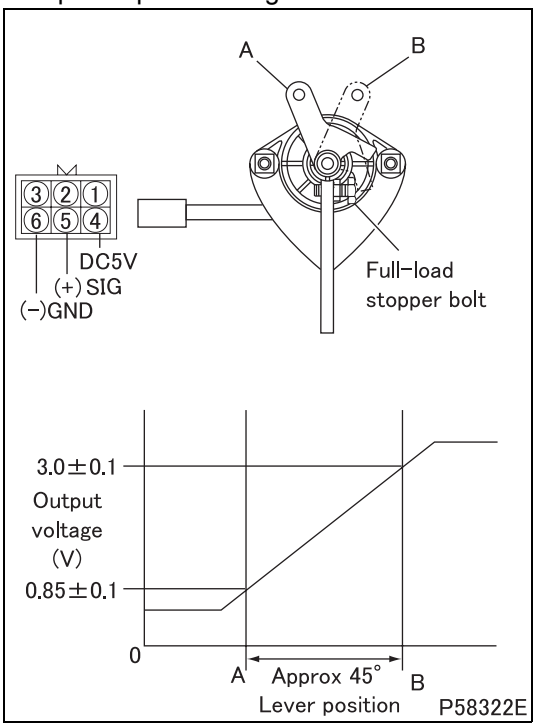

Step 8	Inspection items		Inspection by sensor connector
	Maintenance item		Measure value of voltage between connector terminal No. 4 (+) and 6 (–).
	Inspection condition		• Starter switch: ON • Engine is stopped. • Measure from back side of harness connector with each device connected to harness.
	Requirements		5 V
	Inspection result (Is the judging standard satisfied?)	YES	Go to step 10.
		NO	Go to step 9.

Step 9	Inspection items		Inspection of harness between electronic control unit and sensor (power supply)
	Maintenance item		Check circuit between electronic control unit connector (GF35A) terminal No. 24 and sensor connector terminal No. 4.
	Inspection condition		Disconnect each device from harness and measure from connection side of harness connector.
	Requirements		There is continuity.
	Inspection result (Is the judging standard satisfied?)	YES	Go to step 12.
		NO	Modify harness.

Step 10	Inspection items		Inspection of harness between electronic control unit and sensor (ground)
	Maintenance item		Check circuit between electronic control unit connector (GF35A) terminal No. 27 and sensor connector terminal No. 6.
	Inspection condition		Disconnect each device from harness and measure from connection side of harness connector.
	Requirements		There is continuity.
	Inspection result (Is the judging standard satisfied?)	YES	Go to step 11.
		NO	Modify harness.

Step 11	Inspection items		Inspection of harness between electronic control unit and sensor (signal)
	Maintenance item		Check circuit between electronic control unit connector (GF34A) terminal No. 31 and sensor connector terminal No. 5.
	Inspection condition		Disconnect each device from harness and measure from connection side of harness connector.
	Requirements		There is continuity.
	Inspection result (Is the judging standard satisfied?)	YES	Go to step 12.
		NO	Modify harness.

Step 12	Inspection items		Inspection by control data
	Maintenance item		• Measure item No. 3F “PTO Accel Position” of Service Data. • Measure item No. 40 “PTO Accel Sensor Voltage” of Service Data.
	Inspection condition		When power take-off is used.
	Requirements		**<Accelerator pedal position>** • MIN to MAX: 0 to 100% **<Sensor voltage>** • MIN to MAX: 1 to 3.0 V
	Inspection result (Is the judging standard satisfied?)	YES	Go to transient fault (See Gr00.).
		NO	Replacement of electronic control unit

[Fault code]
Diagnosis code: P0228/Flash code: 61
[Monitor]
Abnormality of auxiliary equipment load sensor
[Fault (outline)]
High signal range check
[Diagnosis check]
- Output voltage of auxiliary equipment load sensor is monitored.

[Code generation condition]
- Voltage of auxiliary equipment load sensor remains over 3.5 V for approx. 1 second when power take-off switch is ON. (Warning lamp is lit and diagnosis code is displayed on first establishment of code generation condition.)

[Diagnosis check timing]
- When code generation condition is established after starter switch ON

[Diagnostic requirement]
- 2 seconds passed after starter switch ON
- 2 seconds passed after cranking
- Battery voltage: normal
- PTO SW: ON

[Control effected by electronic control unit during fault]
–
[Probable cause of trouble]
- Open-circuit or short-circuit of harness between electronic control unit and auxiliary equipment load sensor
- Abnormality of each connector
- Abnormality of auxiliary equipment load sensor
- Abnormality in electronic control unit

[Recoverability]
<Control during fault>
- Recovered if signal becomes normal with starter switch in ON position.

<Warning lamp>
- Extinguished after input of normal signal.

<Fault code>
- If code recovered to normal, automatically cleared at 40th warm up cycle after warning lamp is lit. (To clear as desired, erase from the memory.)

Warm up cycle : “Starter switch ON to start engine till starter switch OFF after coolant temperature increased and engine warmed up” constitutes 1 warm up cycle.

[Electronic Control Unit Connection Diagram]

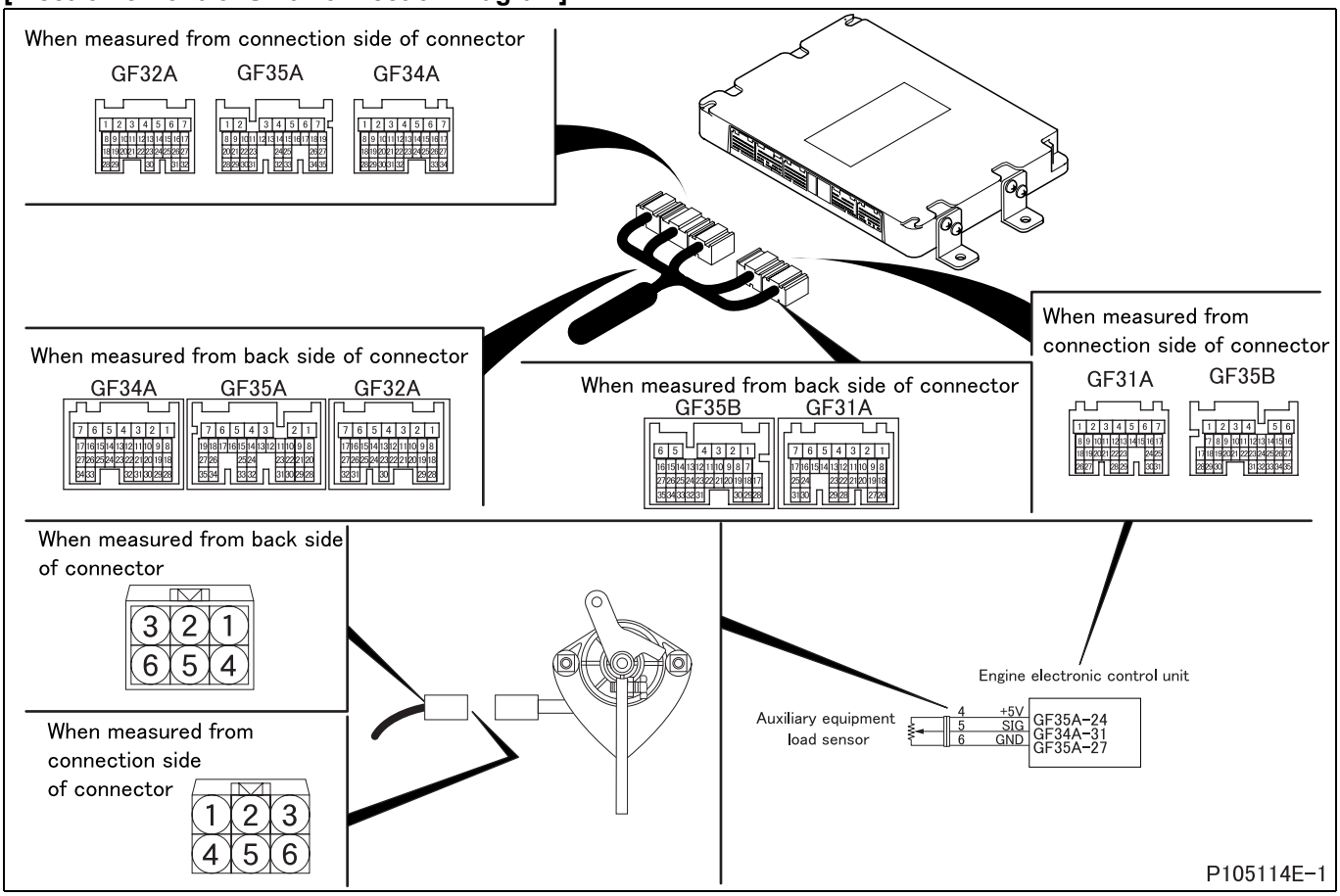

[Parts Identification and Location]

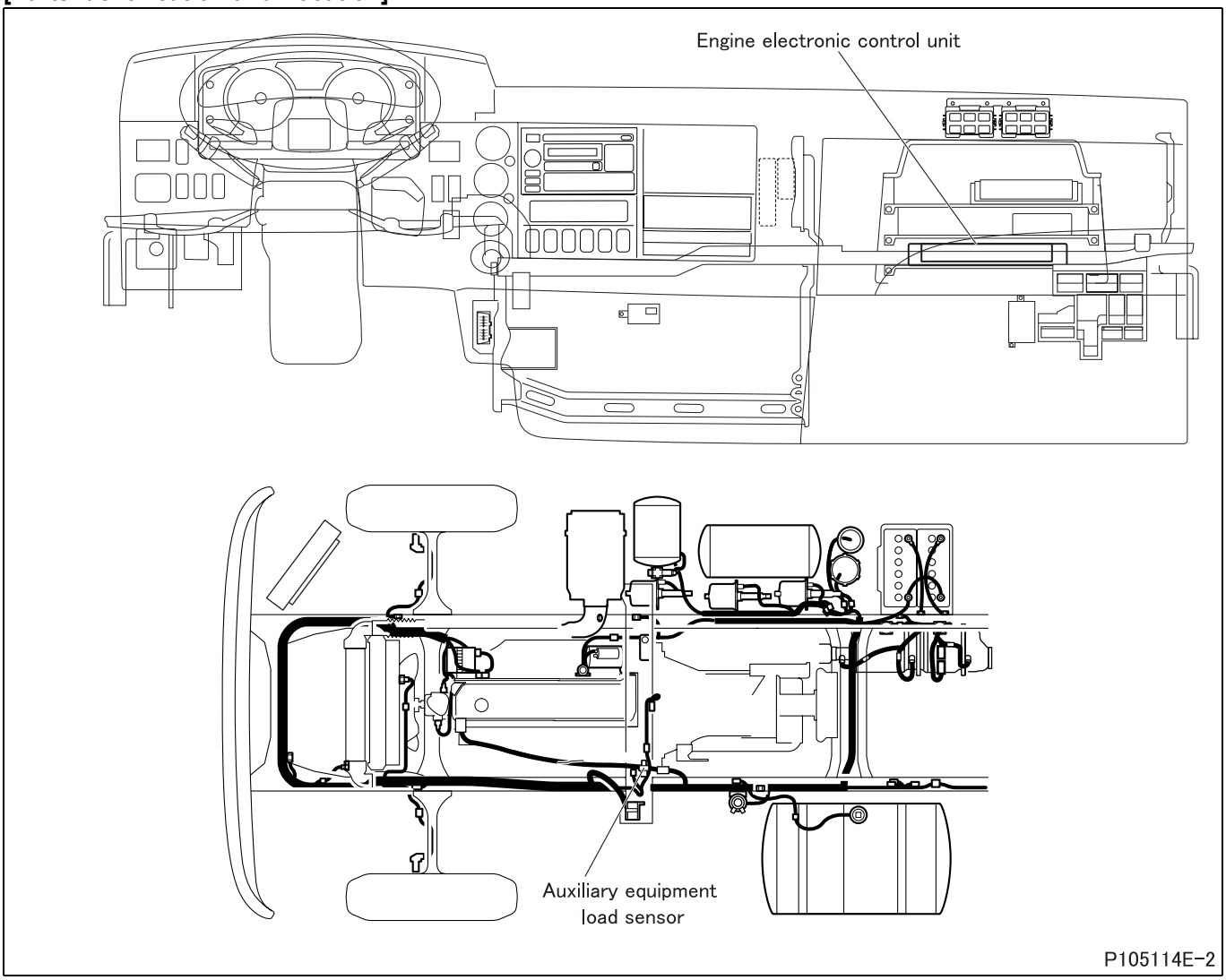

[Fault diagnosis]

- Perform checks in the sequence of the following steps.

Step 1	Inspection items		Inspection by control data
	Maintenance item		• Measure item No. 3F “PTO Accel Position” of Service Data. • Measure item No. 40 “PTO Accel Sensor Voltage” of Service Data.
	Inspection condition		When power take-off is used
	Requirements		**<Accelerator pedal position>** • MIN to MAX: 0 to 100% **<Sensor voltage>** • MIN to MAX: 1 to 3.0 V
	Inspection result (Is the judging standard satisfied?)	YES	Go to transient fault (See Gr00.).
		NO	Go to step 2.

Step 2	Inspection items		Inspection by electronic control unit connector (signal)
	Maintenance item		Measure value of voltage between connector (GF34A) terminal No. 31 (+) and (GF35A) terminal No. 27 (–).
	Inspection condition		• Starter switch: ON • Engine is stopped. • Measure from back side of harness connector with each device connected to harness.
	Requirements		• Idling position: 0.85 ± 0.1 V • Full-load position: 3.0 ± 0.1 V
	Inspection result (Is the judging standard satisfied?)	YES	Go to step 5.
		NO	Go to step 3.

Step 3	Inspection items		Inspection by electronic control unit connector (power supply)
	Maintenance item		Measure value of voltage between connector (GF35A) terminal No. 24 (+) and (GF35A) terminal No. 27 (–).
	Inspection condition		• Starter switch: ON • Engine is stopped. • Measure from back side of harness connector with each device connected to harness.
	Requirements		5 V
	Inspection result (Is the judging standard satisfied?)	YES	Go to step 4.
		NO	Go to step 5.

Step 4	Inspection items		Inspection by electronic control unit connector (ground)
	Maintenance item		Measure value of voltage between connector (GF35A) terminal No. 27 (+) and (GF31A) terminal No. 3 (–).
	Inspection condition		• Starter switch: ON • Engine is stopped. • Measure from back side of harness connector with each device connected to harness.
	Requirements		0 V
	Inspection result (Is the judging standard satisfied?)	YES	Go to step 6.
		NO	Go to step 5.

Step 5	Inspection items		Inspection of electronic control unit connector
	Maintenance item		Inspection of connector
	Inspection condition		–
	Requirements		• Connector is properly connected. • No trace of water entry is found. • No corrosion is found in terminal. • Connection to terminal is appropriate.
	Inspection result (Is the judging standard satisfied?)	YES	Go to step 12.
		NO	Modify connector.

Step 6	Inspection items		Inspection of sensor connector
	Maintenance item		Inspection of connector
	Inspection condition		–
	Requirements		• Connector is properly connected. • No trace of water entry is found. • No corrosion is found in terminal. • Connection to terminal is appropriate.
	Inspection result (Is the judging standard satisfied?)	YES	Go to step 7.
		NO	Modify connector.

Step 7	Inspection items		Inspection of auxiliary equipment load sensor unit
	Maintenance item		Measure value of voltage between connector terminal No. 5 (+) and 6 (–).
	Inspection condition		Apply voltage DC 5 V across connector terminals No. 4 (+) and 6 (–).
	Requirements		• Idling position A: 0.85 ± 0.1 V • Full-load position B: 3.0 ± 0.1 V
	Inspection result (Is the judging standard satisfied?)	YES	Go to step 8.
		NO	• If measurement of idling position A deviates from standard value: replacement of sensor • If measurement of full-load position B deviates from standard value: adjustment of full-load stopper bolt

<Step 7 inspection diagram>

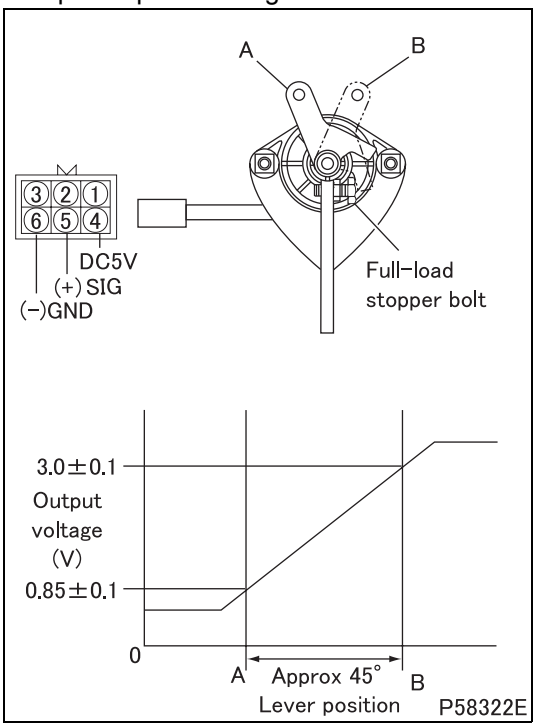

Step 8	Inspection items		Inspection by sensor connector
	Maintenance item		Measure value of voltage between connector terminal No. 4 (+) and 6 (–).
	Inspection condition		• Starter switch: ON • Engine is stopped. • Measure from back side of harness connector with each device connected to harness.
	Requirements		5 V
	Inspection result (Is the judging standard satisfied?)	YES	Go to step 10.
		NO	Go to step 9.

Step 9	Inspection items		Inspection of harness between electronic control unit and sensor (power supply)
	Maintenance item		Check circuit between electronic control unit connector (GF35A) terminal No. 24 and sensor connector terminal No. 4.
	Inspection condition		Disconnect each device from harness and measure from connection side of harness connector.
	Requirements		There is continuity.
	Inspection result (Is the judging standard satisfied?)	YES	Go to step 12.
		NO	Modify harness.

Step 10	Inspection items		Inspection of harness between electronic control unit and sensor (ground)
	Maintenance item		Check circuit between electronic control unit connector (GF35A) terminal No. 27 and sensor connector terminal No. 6.
	Inspection condition		Disconnect each device from harness and measure from connection side of harness connector.
	Requirements		There is continuity.
	Inspection result (Is the judging standard satisfied?)	YES	Go to step 11.
		NO	Modify harness.

Step 11	Inspection items		Inspection of harness between electronic control unit and sensor (signal)
	Maintenance item		Check circuit between electronic control unit connector (GF34A) terminal No. 31 and sensor connector terminal No. 5.
	Inspection condition		Disconnect each device from harness and measure from connection side of harness connector.
	Requirements		There is continuity.
	Inspection result (Is the judging standard satisfied?)	YES	Go to step 12.
		NO	Modify harness.

Step 12	Inspection items		Inspection by control data
	Maintenance item		• Measure item No. 3F “PTO Accel Position” of Service Data. • Measure item No. 40 “PTO Accel Sensor Voltage” of Service Data.
	Inspection condition		When power take-off is used
	Requirements		**<Accelerator pedal position>** • MIN to MAX: 0 to 100% **<Sensor voltage>** • MIN to MAX: 1 to 3.0 V
	Inspection result (Is the judging standard satisfied?)	YES	Go to transient fault (See Gr00.).
		NO	Replacement of electronic control unit

[Fault code]
Diagnosis code: P0234/Flash code: 54
[Monitor]
Abnormality of boost pressure
[Fault (outline)]
Overboost
[Diagnosis check]
- Actual boost pressure is detected by boost pressure sensor and compared with standard pressure recorded in engine electronic control unit.

[Code generation condition]
- Actual boost pressure remains over specified value for approx. 3 seconds.
  (Warning lamp is lit and diagnosis code is displayed on first establishment of code generation condition.)

[Diagnosis check timing]
- When code generation condition is established after starter switch ON

[Diagnostic requirement]
- 2 seconds passed after starter switch ON
- Engine in operation

[Control effected by electronic control unit during fault]
- Injection quantity is limited.

[Probable cause of trouble]
- Mechanical abnormality of turbocharger unit

[Recoverability]
<Control during fault>
- Recovered if signal becomes normal when starter switch is turned OFF to ON (power supply resumed to electronic control unit).

<Warning lamp>
- Extinguished at 4th driving cycle after normal signal is input.

<Fault code>
- Automatically cleared at 40th warm up cycle after warning lamp is extinguished. (To clear as desired, erase from the memory.)

Driving cycle : “Starter switch ON to start engine till starter switch OFF” constitutes 1 driving cycle.
Warm up cycle : “Starter switch ON to start engine till starter switch OFF after coolant temperature increased and engine warmed up” constitutes 1 warm up cycle.

[Fault diagnosis]

- Perform checks in the sequence of the following steps.

Step 1	Inspection items		Inspection by control data
	Maintenance item		Check if following diagnosis codes occur simultaneously. • P0069 “Boost Press SNSR (Correlation)” • P0236 “Boost Press SNSR (Plausi)” • P0237 “Boost Press SNSR (Low)” • P0238 “Boost Press SNSR (High)” • P0401 “EGR Flow (Insufficient)” • P0402 “EGR Flow (Excessive)” • P0403 “EGR1 (Actuator Circuit)” • P0404 “EGR System” • P0409 “EGR1 (Position Sensor)” • P0562 “Power Supply Voltage (Low)” • P0563 “Power Supply Voltage (High)” • P0600 “CAN Communication” • P0604 “ECU Hardware (RAM)” • P0605 “ECU System (Hardware)” • P0606 “ECU Hardware (Main CPU)” • P0607 “ECU System” • P062F “ECU System (EEPROM)” • P0685 “EDU Relay (Open)” • P0686 “EDU Relay (Low)” • P0687 “EDU Relay (High)” • P2002 “DPF MFF” • P2228 “Atm Press SNSR (Low)” • P2229 “Atm Press SNSR (High)” • P2413 “EGR System” • P2453 “DPF Diff SNSR (Plausi) & MFF” • P2454 “DPF Diff SNSR (Low) & MFF” • P2455 “DPF Diff SNSR (High) & MFF”
	Inspection condition		Starter switch: ON Do not start engine.
	Requirements		Codes occur.
	Inspection result (Is the judging standard satisfied?)	YES	Inspect diagnosis code that is occurring.
		NO	Go to step 2.

Step 2	Inspection items		Check of exhaust system
	Maintenance item		Front pipe, diesel particulate filter, tail pipe
	Inspection condition		Starter switch: OFF
	Requirements		Blocked
	Inspection result (Is the judging standard satisfied?)	YES	Clean or replace parts.
		NO	Go to step 3.

Step 3	Inspection items		Inspection of turbocharger
	Maintenance item		Inspection of turbocharger appearance • Waste gate actuator rod cracked or broken • Hose connected to waste gate actuator slipped off • Waste gate valve stuck • Turbocharger unit cracked, etc.
	Inspection condition		Starter switch: OFF
	Requirements		In order
	Inspection result (Is the judging standard satisfied?)	YES	Go to step 4.
		NO	Replacement of abnormal parts

Step 4	Inspection items		Inspection by control data
	Maintenance item		Measure item No. 26 “Boost Pressure” of Service Data.
	Inspection condition		After engine is completely warmed up
	Requirements		• Engine stationary: equivalent to atmospheric pressure • Engine speed at 3210 rpm (no-load maximum speed): 174 kPa {51.4 in.Hg}
	Inspection result (Is the judging standard satisfied?)	YES	Go to transient fault (See Gr00.).
		NO	Replacement of turbocharger

[Fault code]
Diagnosis code: P0236/Flash code: 32
[Monitor]
Characteristic abnormality of boost pressure sensor
[Fault (outline)]
Gain and offset drift
[Diagnosis check]
- Output voltage of boost pressure sensor is monitored.

[Code generation condition]
Check result by electronic control unit differs according to boost pressure. (Warning lamp is lit and diagnosis code is displayed on second establishment of code generation condition.)
<Low speed operation>
- Boost pressure: Remains over 114 kPa {16.5 psi, 1.2 kgf/cm^2} for 5 seconds.

<High speed operation>
- Boost pressure: Remains below 120 kPa {17 psi, 1.2 kgf/cm^2} for 5 seconds.

[Diagnosis check timing]
- When code generation condition is established after starter switch ON

[Diagnostic requirement]
Code generation condition is established if engine speed remains in L or H range below for more than 0.5 second.
- Intake throttle opening: L (40 to 60), H (90 to 100)%
- Exhaust gas recirculation valve opening: L (0 to 100), H (0 to 100)%
- Engine speed: L (550 to 650), H (1700 to 1900)
- Injection quantity: L (–20 to 15) and H (75 to 110)%

[Control effected by electronic control unit during fault]
- Effects no special control.

[Probable cause of trouble]
- Open-circuit or short-circuit of harness between electronic control unit and boost pressure sensor
- Abnormality of each connector
- Abnormality of boost pressure sensor
- Abnormality in electronic control unit

[Recoverability]
<Control during fault>
- Recovered if signal becomes normal with starter switch in ON position.

<Warning lamp>
- Extinguished at 4th driving cycle after normal signal is input.

<Fault code>
- Automatically cleared at 40th warm up cycle after warning lamp is extinguished. (To clear as desired, erase from the memory.)

Driving cycle : “Starter switch ON to start engine till starter switch OFF” constitutes 1 driving cycle.
Warm up cycle : “Starter switch ON to start engine till starter switch OFF after coolant temperature increased and engine warmed up” constitutes 1 warm up cycle.

[Electronic Control Unit Connection Diagram]

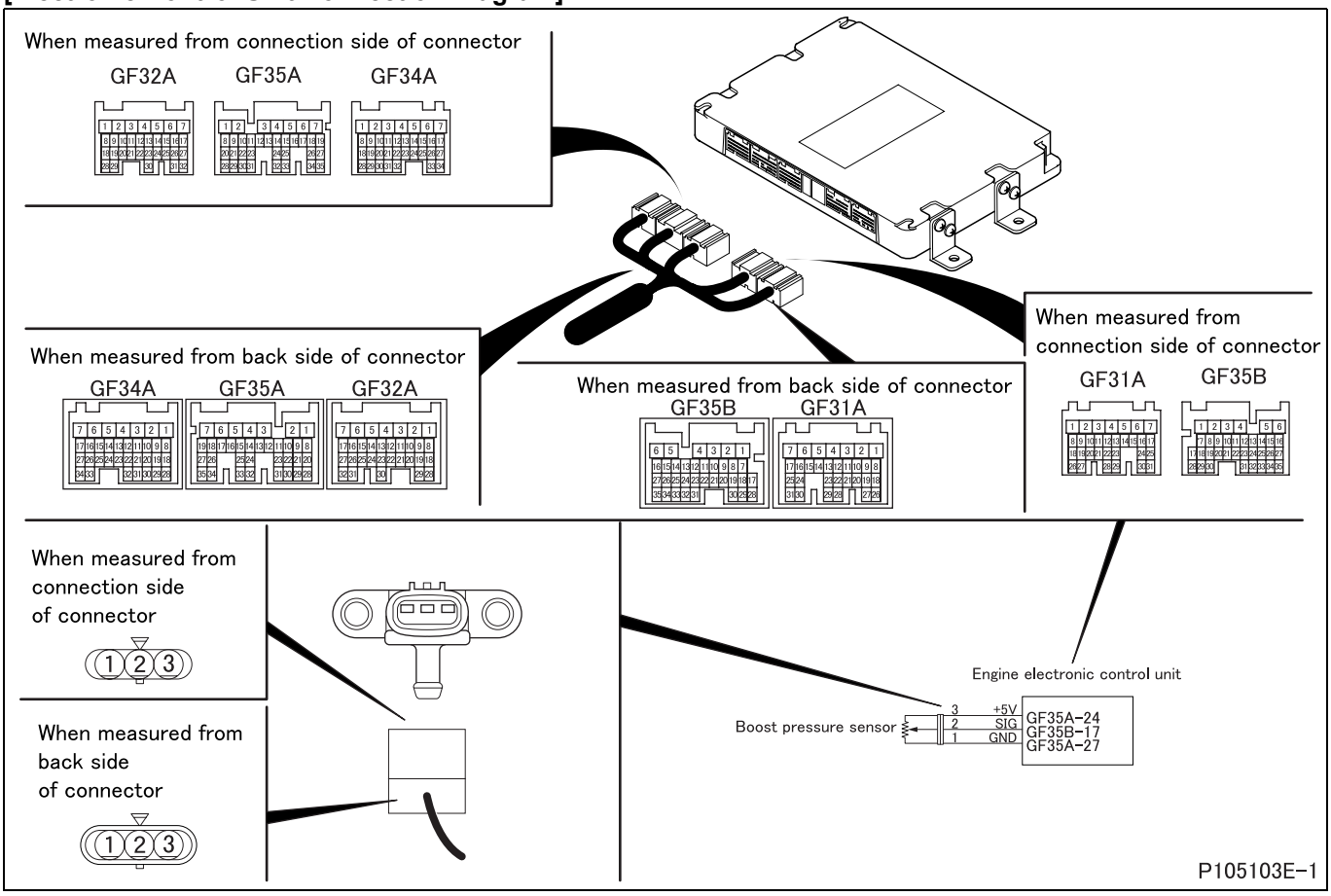

[Parts Identification and Location]

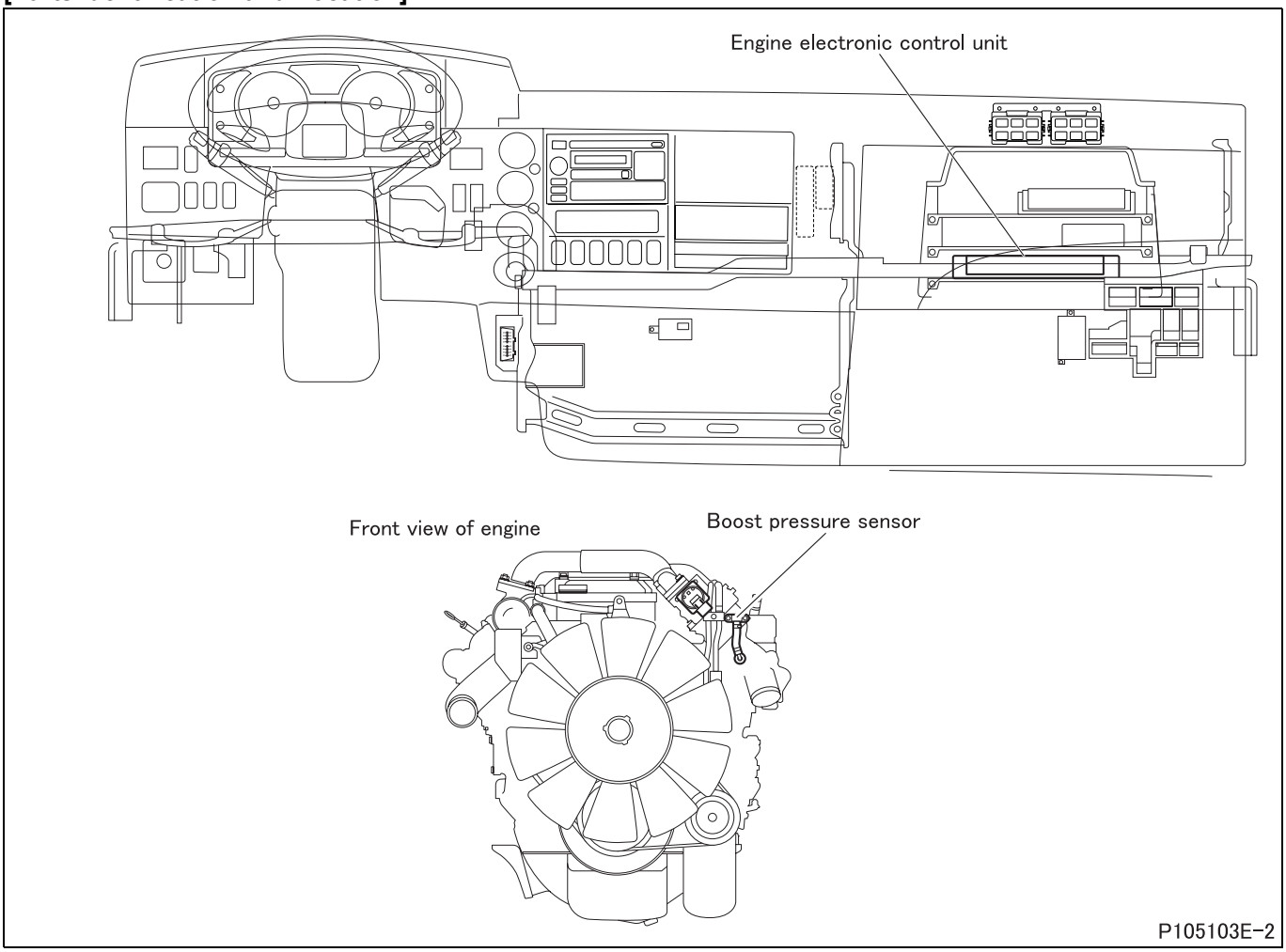

[Fault diagnosis]

- Perform checks in the sequence of the following steps.

Step 1	Inspection items		Inspection by control data
	Maintenance item		**<General Scanning Tool used>** • Measure item “Intake MAP”. **<Multi-Use Tester used>** • Measure item No. 26 “Boost Pressure” of Service Data.
	Inspection condition		Starter switch ON (engine stationary) → After engine has started, press accelerator pedal.
	Requirements		Coincides with atmospheric pressure → Gradually increases
	Inspection result (Is the judging standard satisfied?)	YES	Go to transient fault (See Gr00.).
		NO	Go to step 2.

Step 2	Inspection items		Inspection by electronic control unit connector (signal)
	Maintenance item		Measure value of voltage between connector (GF35B) terminal No. 17 (+) and (GF35A) terminal No. 27 (–).
	Inspection condition		• Measure from back side of connector of harness with each device connected to harness. • Engine started
	Requirements		0.5 to 4.5 V
	Inspection result (Is the judging standard satisfied?)	YES	Go to step 5.
		NO	Go to step 3.

Step 3	Inspection items		Inspection by electronic control unit connector (power supply)
	Maintenance item		Measure value of voltage between connector (GF35A) terminal No. 24 (+) and 27 (–).
	Inspection condition		• Measure from back side of connector of harness with each device connected to harness. • Starter switch: ON
	Requirements		5 V
	Inspection result (Is the judging standard satisfied?)	YES	Go to step 4.
		NO	Go to step 5.

Step 4	Inspection items		Inspection by electronic control unit connector (ground)
	Maintenance item		Measure value of voltage between connector (GF35A) terminal No. 27 (+) and (GF31A) terminal No. 3 (–).
	Inspection condition		• Measure from back side of connector of harness with each device connected to harness. • Starter switch: ON
	Requirements		0 V
	Inspection result (Is the judging standard satisfied?)	YES	Go to step 6.
		NO	Go to step 5.

Step 5	Inspection items		Inspection of electronic control unit connector
	Maintenance item		Inspection of connector
	Inspection condition		–
	Requirements		• Connector is properly connected. • No trace of water entry is found. • No corrosion is found in terminal. • Connection to terminal is appropriate.
	Inspection result (Is the judging standard satisfied?)	YES	Go to step 12.
		NO	Modify connector.

Step 6	Inspection items		Inspection of sensor connector
	Maintenance item		Inspection of connector
	Inspection condition		–
	Requirements		• Connector is properly connected. • No trace of water entry is found. • No corrosion is found in terminal. • Connection to terminal is appropriate.
	Inspection result (Is the judging standard satisfied?)	YES	Go to step 7.
		NO	Modify connector.

Step 7	Inspection items		Inspection of sensor unit
	Maintenance item		Measure voltage developing across connector terminal No. 2 (+) and 1 (–) when air pressure (gauge pressure) is gradually applied.
	Inspection condition		Apply voltage DC 5 V across connector terminals No. 3 (+) and 1 (–).
	Requirements		• 101.67 kPa {15 psi, 1.0 kgf/cm^2}: Approx. 3.2 V • 165.67 kPa {24 psi, 1.7 kgf/cm^2}: Approx. 4.5 V
	Inspection result (Is the judging standard satisfied?)	YES	Go to step 8.
		NO	Replacement of sensor

<Step 7 inspection diagram>

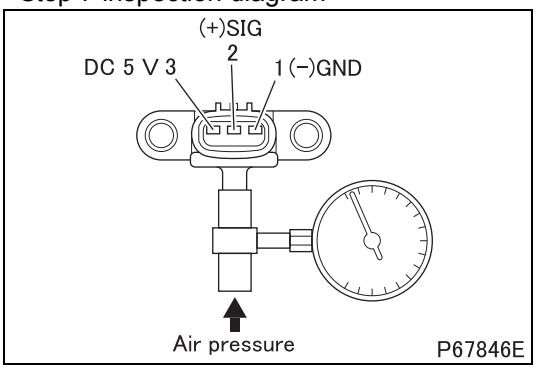

Step 8	Inspection items		Inspection of harness between electronic control unit and sensor (power supply)
	Maintenance item		Measure value of voltage between connector terminal No. 3 (+) and 1 (–).
	Inspection condition		• Measure from back side of connector of harness with each device connected to harness. • Starter switch: ON
	Requirements		5 V
	Inspection result (Is the judging standard satisfied?)	YES	Go to step 10.
		NO	Go to step 9.

Step 9	Inspection items		Inspection of harness between electronic control unit and sensor (power supply)
	Maintenance item		Check circuit between sensor connector terminal No. 3 and electronic control unit connector (GF35A) terminal No. 24.
	Inspection condition		Disconnect each device from harness and measure from connection side of harness connector.
	Requirements		There is continuity.
	Inspection result (Is the judging standard satisfied?)	YES	Go to step 12.
		NO	Modify harness.

Step 10	Inspection items		Inspection of harness between electronic control unit and sensor (ground)
	Maintenance item		Check circuit between sensor connector terminal No. 1 and electronic control unit connector (GF35A) terminal No. 27.
	Inspection condition		Disconnect each device from harness and measure from connection side of harness connector.
	Requirements		There is continuity.
	Inspection result (Is the judging standard satisfied?)	YES	Go to step 11.
		NO	Modify harness.

Step 11	Inspection items		Inspection of harness between electronic control unit and sensor (signal)
	Maintenance item		Check circuit between sensor connector terminal No. 2 and electronic control unit connector (GF35B) terminal No. 17.
	Inspection condition		Disconnect each device from harness and measure from connection side of harness connector.
	Requirements		There is continuity.
	Inspection result (Is the judging standard satisfied?)	YES	Go to step 12.
		NO	Modify harness.

Step 12	Inspection items		Inspection by control data
	Maintenance item		**<General Scanning Tool used>** • Measure item “Intake MAP”. **<Multi-Use Tester used>** • Measure item No. 26 “Boost Pressure” of Service Data.
	Inspection condition		Starter switch ON (engine stationary) → After engine has started, press accelerator pedal.
	Requirements		Coincides with atmospheric pressure → Gradually increases
	Inspection result (Is the judging standard satisfied?)	YES	Go to transient fault (See Gr00.).
		NO	Replacement of electronic control unit

[Fault code]
Diagnosis code: P0237/Flash code: 32
[Monitor]
Abnormality of boost pressure sensor
[Fault (outline)]
Low signal range check
[Diagnosis check]
- Output voltage of boost pressure sensor is monitored.

[Code generation condition]
- Voltage of boost pressure sensor remains below 0.3 V for approx. 2.5 seconds.
  (Warning lamp is lit and diagnosis code is displayed on first establishment of code generation condition.)

[Diagnosis check timing]
- When code generation condition is established after starter switch ON

[Diagnostic requirement]
- 2 seconds passed after starter switch ON
- 2 seconds passed after cranking
- Battery voltage: normal
- Injection quantity: more than specified

[Control effected by electronic control unit during fault]
- Injection quantity is limited.
- Exhaust gas recirculation control is stopped.
- Throttle control is stopped.
- Diesel particulate filter regeneration (manual or automatic) is stopped.
- Particulate matter (PM) deposit computation is stopped.
- Boost pressure is locked at 101 kPa {1.03 kgf/cm^2}.

[Probable cause of trouble]
- Open-circuit or short-circuit of harness between electronic control unit and boost pressure sensor
- Abnormality of each connector
- Abnormality of boost pressure sensor
- Abnormality in electronic control unit

[Recoverability]
<Control during fault>
- Recovered if signal becomes normal with starter switch in ON position.

<Warning lamp>
- Extinguished at 4th driving cycle after normal signal is input.

<Fault code>
- Automatically cleared at 40th warm up cycle after warning lamp is extinguished. (To clear as desired, erase from the memory.)

Driving cycle : “Starter switch ON to start engine till starter switch OFF” constitutes 1 driving cycle.
Warm up cycle : “Starter switch ON to start engine till starter switch OFF after coolant temperature increased and engine warmed up” constitutes 1 warm up cycle.

[Electronic Control Unit Connection Diagram]

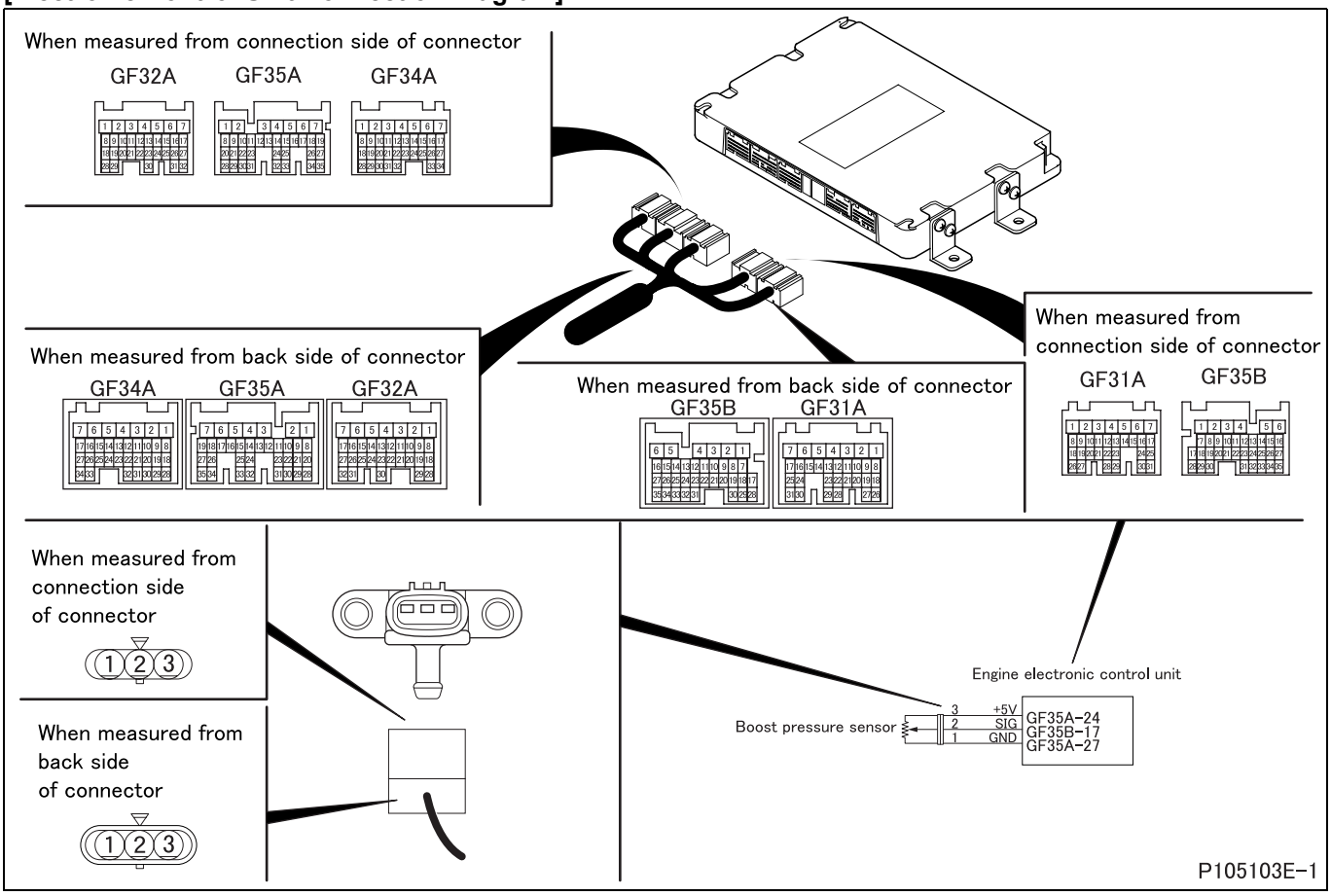

[Parts Identification and Location]

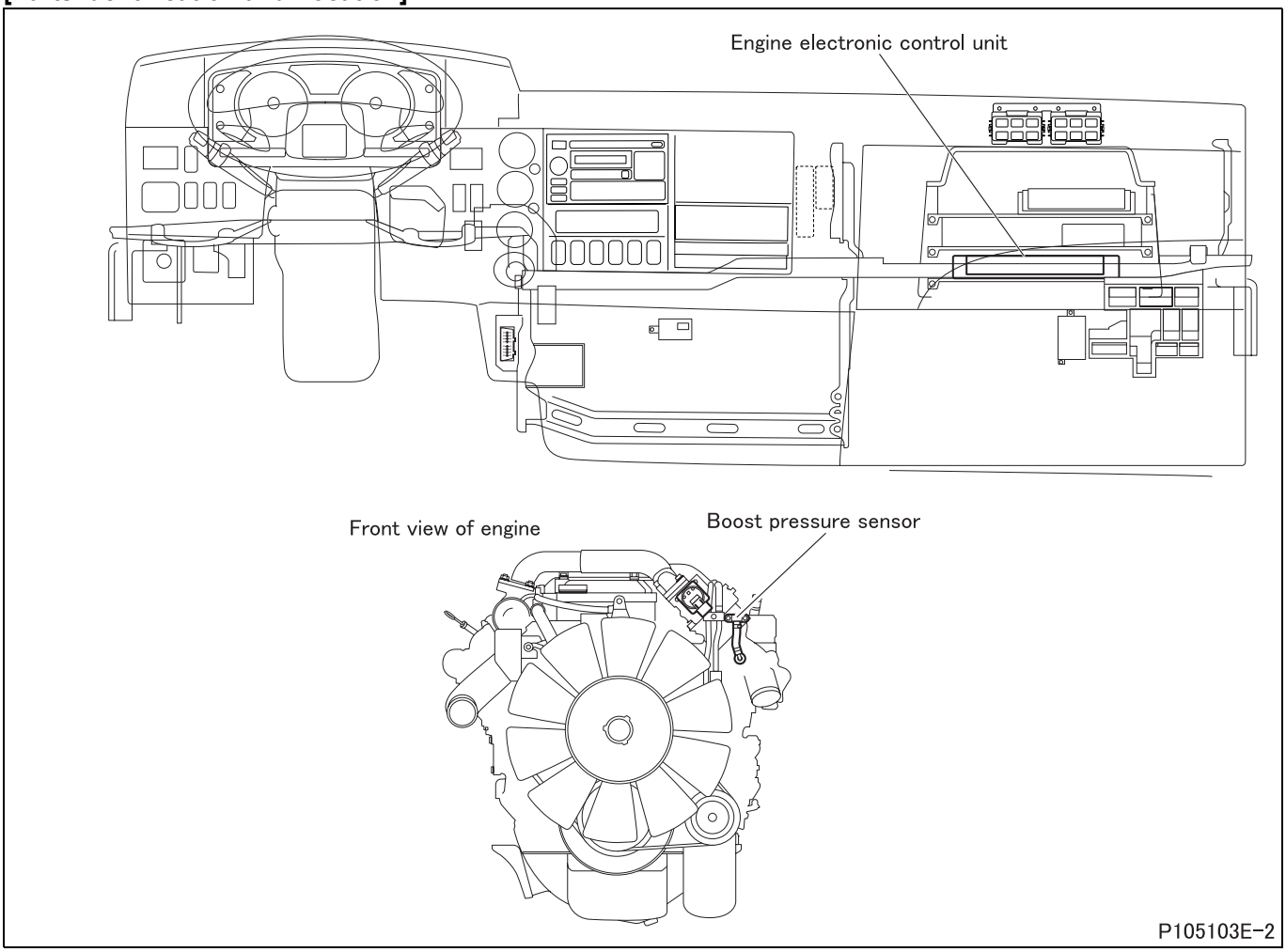

[Fault diagnosis]

- Perform checks in the sequence of the following steps.

Step 1	Inspection items		Inspection by control data
	Maintenance item		**<General Scanning Tool used>** • Measure item “Intake MAP”. **<Multi-Use Tester used>** • Measure item No. 26 “Boost Pressure” of Service Data.
	Inspection condition		Starter switch ON (engine stationary) → After engine has started, press accelerator pedal.
	Requirements		Coincides with atmospheric pressure → Gradually increases
	Inspection result (Is the judging standard satisfied?)	YES	Go to transient fault (See Gr00.).
		NO	Go to step 2.

Step 2	Inspection items		Inspection by electronic control unit connector (signal)
	Maintenance item		Measure value of voltage between connector (GF35B) terminal No. 17 (+) and (GF35A) terminal No. 27 (–).
	Inspection condition		• Measure from back side of connector of harness with each device connected to harness. • Engine started
	Requirements		0.5 to 4.5 V
	Inspection result (Is the judging standard satisfied?)	YES	Go to step 5.
		NO	Go to step 3.

Step 3	Inspection items		Inspection by electronic control unit connector (power supply)
	Maintenance item		Measure value of voltage between connector (GF35A) terminal No. 24 (+) and 27 (–).
	Inspection condition		• Measure from back side of connector of harness with each device connected to harness. • Starter switch: ON
	Requirements		5 V
	Inspection result (Is the judging standard satisfied?)	YES	Go to step 4.
		NO	Go to step 5.

Step 4	Inspection items		Inspection by electronic control unit connector (ground)
	Maintenance item		Measure value of voltage between connector (GF35A) terminal No. 27 (+) and (GF31A) terminal No. 3 (–).
	Inspection condition		• Measure from back side of connector of harness with each device connected to harness. • Starter switch: ON
	Requirements		0 V
	Inspection result (Is the judging standard satisfied?)	YES	Go to step 6.
		NO	Go to step 5.

Step 5	Inspection items		Inspection of electronic control unit connector
	Maintenance item		Inspection of connector
	Inspection condition		–
	Requirements		• Connector is properly connected. • No trace of water entry is found. • No corrosion is found in terminal. • Connection to terminal is appropriate.
	Inspection result (Is the judging standard satisfied?)	YES	Go to step 12.
		NO	Modify connector.

Step 6	Inspection items		Inspection of sensor connector
	Maintenance item		Inspection of connector
	Inspection condition		–
	Requirements		• Connector is properly connected. • No trace of water entry is found. • No corrosion is found in terminal. • Connection to terminal is appropriate.
	Inspection result (Is the judging standard satisfied?)	YES	Go to step 7.
		NO	Modify connector.

Step 7	Inspection items		Inspection of sensor unit
	Maintenance item		Measure voltage developing across connector terminal No. 2 (+) and 1 (–) when air pressure (gauge pressure) is gradually applied.
	Inspection condition		Apply voltage DC 5 V across connector terminals No. 3 (+) and 1 (–).
	Requirements		• 101.67 kPa {15 psi, 1.0 kgf/cm^2}: Approx. 3.2 V • 165.67 kPa {24 psi, 1.7 kgf/cm^2}: Approx. 4.5 V
	Inspection result (Is the judging standard satisfied?)	YES	Go to step 8.
		NO	Replacement of sensor

<Step 7 inspection diagram>

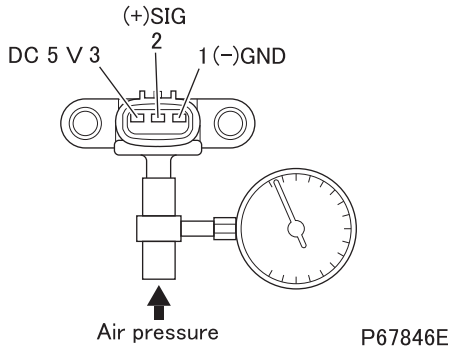

Step 8	Inspection items		Inspection of harness between electronic control unit and sensor (power supply)
	Maintenance item		Measure value of voltage between connector terminal No. 3 (+) and 1 (–).
	Inspection condition		• Measure from back side of connector of harness with each device connected to harness. • Starter switch: ON
	Requirements		5 V
	Inspection result (Is the judging standard satisfied?)	YES	Go to step 10.
		NO	Go to step 9.

Step 9	Inspection items		Inspection of harness between electronic control unit and sensor (power supply)
	Maintenance item		Check circuit between sensor connector terminal No. 3 and electronic control unit connector (GF35A) terminal No. 24.
	Inspection condition		Disconnect each device from harness and measure from connection side of harness connector.
	Requirements		There is continuity.
	Inspection result (Is the judging standard satisfied?)	YES	Go to step 12.
		NO	Modify harness.

Step 10	Inspection items		Inspection of harness between electronic control unit and sensor (ground)
	Maintenance item		Check circuit between sensor connector terminal No. 1 and electronic control unit connector (GF35A) terminal No. 27.
	Inspection condition		Disconnect each device from harness and measure from connection side of harness connector.
	Requirements		There is continuity.
	Inspection result (Is the judging standard satisfied?)	YES	Go to step 11.
		NO	Modify harness.

Step 11	Inspection items		Inspection of harness between electronic control unit and sensor (signal)
	Maintenance item		Check circuit between sensor connector terminal No. 2 and electronic control unit connector (GF35B) terminal No. 17.
	Inspection condition		Disconnect each device from harness and measure from connection side of harness connector.
	Requirements		There is continuity.
	Inspection result (Is the judging standard satisfied?)	YES	Go to step 12.
		NO	Modify harness.

Step 12	Inspection items		Inspection by control data
	Maintenance item		**<General Scanning Tool used>** • Measure item “Intake MAP”. **<Multi-Use Tester used>** • Measure item No. 26 “Boost Pressure” of Service Data.
	Inspection condition		Starter switch ON (engine stationary) → After engine has started, press accelerator pedal.
	Requirements		Coincides with atmospheric pressure → Gradually increases
	Inspection result (Is the judging standard satisfied?)	YES	Go to transient fault (See Gr00.).
		NO	Replacement of electronic control unit

[Fault code]
Diagnosis code: P0238/Flash code: 32
[Monitor]
Abnormality of boost pressure sensor
[Fault (outline)]
High signal range check
[Diagnosis check]
- Output voltage of boost pressure sensor is monitored.

[Code generation condition]
- Voltage of boost pressure sensor remains over 4.7 V for approx. 2.5 seconds.
  (Warning lamp is lit and diagnosis code is displayed on first establishment of code generation condition.)

[Diagnosis check timing]
- When code generation condition is established after starter switch ON

[Diagnostic requirement]
- 2 seconds passed after starter switch ON
- 2 seconds passed after cranking
- Battery voltage: normal

[Control effected by electronic control unit during fault]
- Injection quantity is limited.
- Exhaust gas recirculation control is stopped.
- Throttle control is stopped.
- Diesel particulate filter regeneration (manual or automatic) is stopped.
- Particulate matter (PM) deposit computation is stopped.
- Boost pressure is locked at 101 kPa {1.03 kgf/cm^2}.

[Probable cause of trouble]
- Open-circuit or short-circuit of harness between electronic control unit and boost pressure sensor
- Abnormality of each connector
- Abnormality of boost pressure sensor
- Abnormality in electronic control unit

[Recoverability]
<Control during fault>
- Recovered if signal becomes normal with starter switch in ON position.

<Warning lamp>
- Extinguished at 4th driving cycle after normal signal is input.

<Fault code>
- Automatically cleared at 40th warm up cycle after warning lamp is extinguished. (To clear as desired, erase from the memory.)

Driving cycle : “Starter switch ON to start engine till starter switch OFF” constitutes 1 driving cycle.
Warm up cycle : “Starter switch ON to start engine till starter switch OFF after coolant temperature increased and engine warmed up” constitutes 1 warm up cycle.

[Electronic Control Unit Connection Diagram]

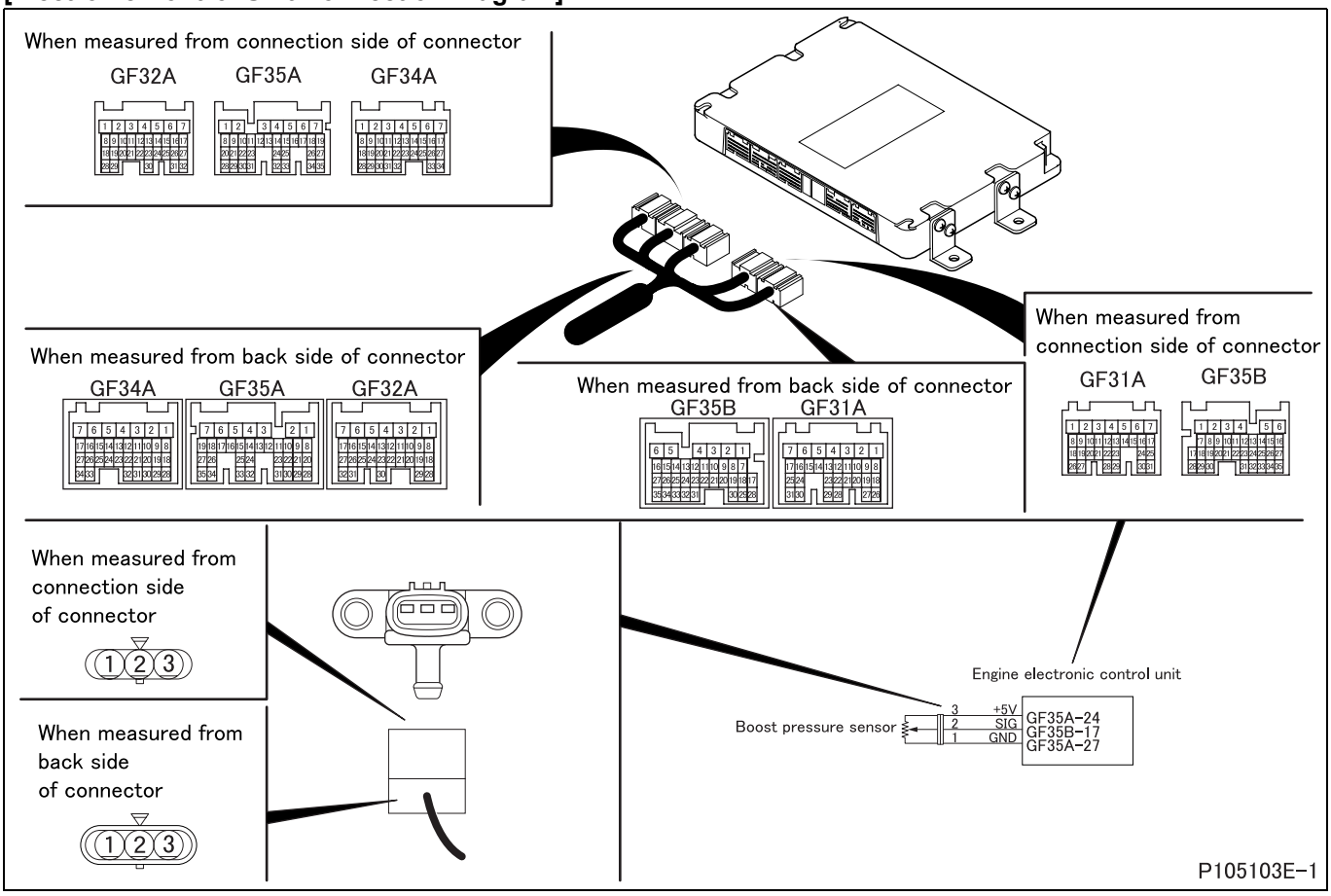

[Parts Identification and Location]

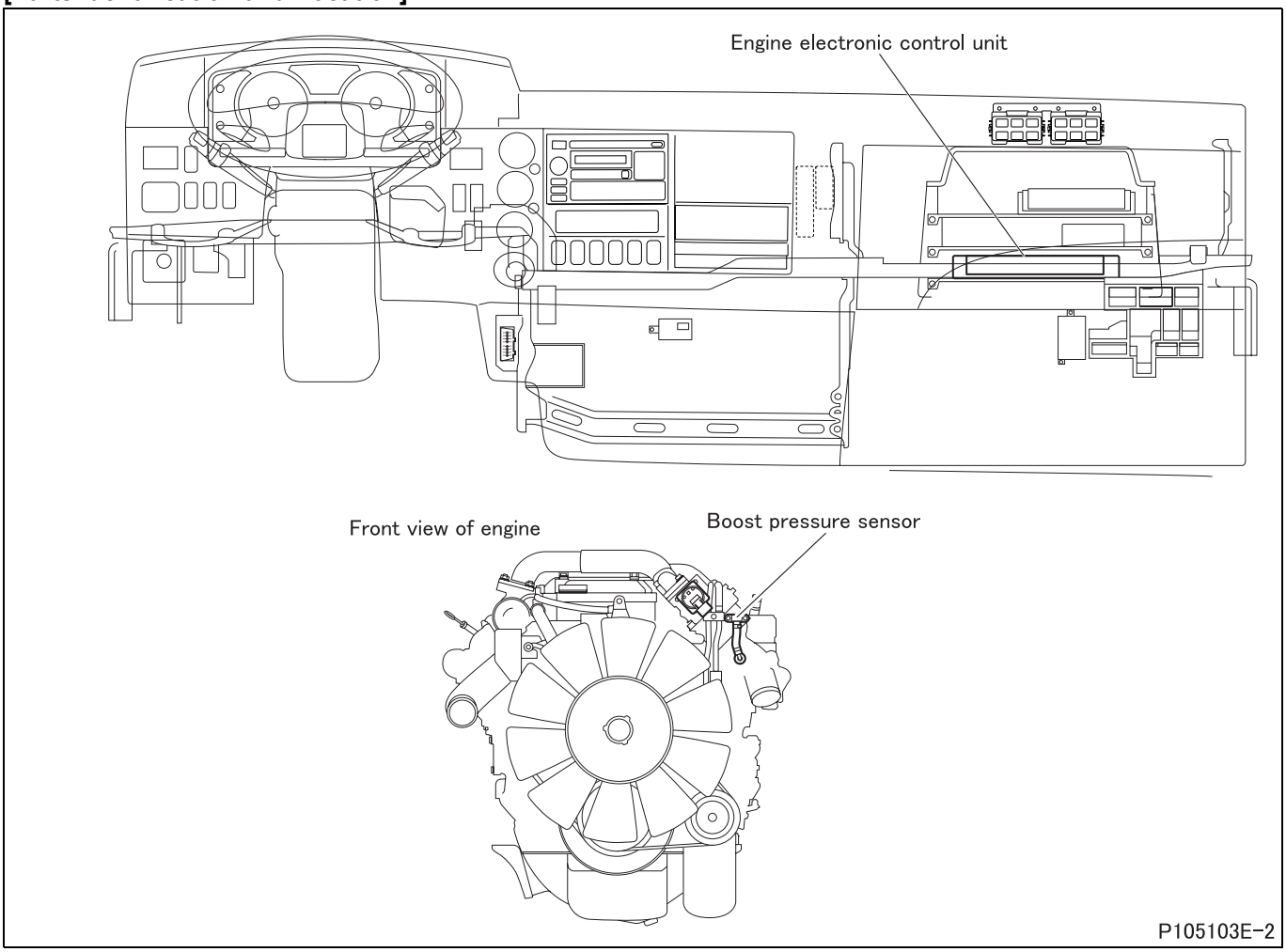

[Fault diagnosis]

- Perform checks in the sequence of the following steps.

Step 1	Inspection items		Inspection by control data
	Maintenance item		**<General Scanning Tool used>** • Measure item “Intake MAP”. **<Multi-Use Tester used>** • Measure item No. 26 “Boost Pressure” of Service Data.
	Inspection condition		Starter switch ON (engine stationary) → After engine has started, press accelerator pedal.
	Requirements		Coincides with atmospheric pressure → Gradually increases
	Inspection result (Is the judging standard satisfied?)	YES	Go to transient fault (See Gr00.).
		NO	Go to step 2.

Step 2	Inspection items		Inspection by electronic control unit connector (signal)
	Maintenance item		Measure value of voltage between connector (GF35B) terminal No. 17 (+) and (GF35A) terminal No. 27 (–).
	Inspection condition		• Measure from back side of connector of harness with each device connected to harness. • Engine started
	Requirements		0.5 to 4.5 V
	Inspection result (Is the judging standard satisfied?)	YES	Go to step 5.
		NO	Go to step 3.

Step 3	Inspection items		Inspection by electronic control unit connector (power supply)
	Maintenance item		Measure value of voltage between connector (GF35A) terminal No. 24 (+) and 27 (–).
	Inspection condition		• Measure from back side of connector of harness with each device connected to harness. • Starter switch: ON
	Requirements		5 V
	Inspection result (Is the judging standard satisfied?)	YES	Go to step 4.
		NO	Go to step 5.

Step 4	Inspection items		Inspection by electronic control unit connector (ground)
	Maintenance item		Measure value of voltage between connector (GF35A) terminal No. 27 (+) and (GF31A) terminal No. 3 (–).
	Inspection condition		• Measure from back side of connector of harness with each device connected to harness. • Starter switch: ON
	Requirements		0 V
	Inspection result (Is the judging standard satisfied?)	YES	Go to step 6.
		NO	Go to step 5.

Step 5	Inspection items		Inspection of electronic control unit connector
	Maintenance item		Inspection of connector
	Inspection condition		–
	Requirements		• Connector is properly connected. • No trace of water entry is found. • No corrosion is found in terminal. • Connection to terminal is appropriate.
	Inspection result (Is the judging standard satisfied?)	YES	Go to step 12.
		NO	Modify connector.

Step 6	Inspection items		Inspection of sensor connector
	Maintenance item		Inspection of connector
	Inspection condition		–
	Requirements		• Connector is properly connected. • No trace of water entry is found. • No corrosion is found in terminal. • Connection to terminal is appropriate.
	Inspection result (Is the judging standard satisfied?)	YES	Go to step 7.
		NO	Modify connector.

Step 7	Inspection items		Inspection of sensor unit
	Maintenance item		Measure value of voltage developing across connector terminal No. 2 (+) and 1 (–) when air pressure (gauge pressure) is gradually applied.
	Inspection condition		Apply voltage DC 5 V across connector terminals No. 3 (+) and 1 (–).
	Requirements		• 101.67 kPa {15 psi, 1.0 kgf/cm^2}: Approx. 3.2 V • 165.67 kPa {24 psi, 1.7 kgf/cm^2}: Approx. 4.5 V
	Inspection result (Is the judging standard satisfied?)	YES	Go to step 8.
		NO	Replacement of sensor

<Step 7 inspection diagram>

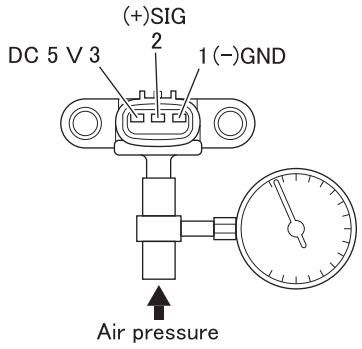

Step 8	Inspection items		Inspection of harness between electronic control unit and sensor (power supply)
	Maintenance item		Measure value of voltage between connector terminal No. 3 (+) and 1 (–).
	Inspection condition		• Measure from back side of connector of harness with each device connected to harness. • Starter switch: ON
	Requirements		5 V
	Inspection result (Is the judging standard satisfied?)	YES	Go to step 10.
		NO	Go to step 9.

Step 9	Inspection items		Inspection of harness between electronic control unit and sensor (power supply)
	Maintenance item		Check circuit between sensor connector terminal No. 3 and electronic control unit connector (GF35A) terminal No. 24.
	Inspection condition		Disconnect each device from harness and measure from connection side of harness connector.
	Requirements		There is continuity.
	Inspection result (Is the judging standard satisfied?)	YES	Go to step 12.
		NO	Modify harness.

Step 10	Inspection items		Inspection of harness between electronic control unit and sensor (ground)
	Maintenance item		Check circuit between sensor connector terminal No. 1 and electronic control unit connector (GF35A) terminal No. 27.
	Inspection condition		Disconnect each device from harness and measure from connection side of harness connector.
	Requirements		There is continuity.
	Inspection result (Is the judging standard satisfied?)	YES	Go to step 11.
		NO	Modify harness.

Step 11	Inspection items		Inspection of harness between electronic control unit and sensor (signal)
	Maintenance item		Check circuit between sensor connector terminal No. 2 and electronic control unit connector (GF35B) terminal No. 17.
	Inspection condition		Disconnect each device from harness and measure from connection side of harness connector.
	Requirements		There is continuity.
	Inspection result (Is the judging standard satisfied?)	YES	Go to step 12.
		NO	Modify harness.

Step 12	Inspection items		Inspection by control data
	Maintenance item		**<General Scanning Tool used>** • Measure item “Intake MAP”. **<Multi-Use Tester used>** • Measure item No. 26 “Boost Pressure” of Service Data.
	Inspection condition		Starter switch ON (engine stationary) → After engine has started, press accelerator pedal.
	Requirements		Coincides with atmospheric pressure → Gradually increases
	Inspection result (Is the judging standard satisfied?)	YES	Go to transient fault (See Gr00.).
		NO	Replacement of electronic control unit

[Fault code]
Diagnosis code: P0244/Flash code: 51
[Monitor]
System monitor of waste gate
[Fault (outline)]
Waste gate system check
[Diagnosis check]
- Boost pressure is monitored for deviation from specified value when waste gate operates.

[Code generation condition]
- At valve opening, boost pressure remains higher than specified for 30 seconds.
- At valve closing, boost pressure remains lower than specified for 30 seconds.
  (Warning lamp is lit and diagnosis code is displayed on second establishment of code generation condition.)

[Diagnosis check timing]
- When code generation condition is established after starter switch ON

[Diagnostic requirement]
- 2 seconds passed after starter switch ON
- 2 seconds passed after cranking
- Battery voltage: normal
- Water temperature: 70◦C {158◦F}
- Engine speed: more than 2000 rpm
- Intake throttle opening: more than 0%
- Exhaust gas recirculation valve opening: more than 0%
- Atmospheric pressure: more than 85 kPa {12 psi, 0.9 kgf/cm^2} (at 1500 m {5000 ft})
- Intake air temperature: more than 20◦C {68◦F}
- Intake air temperature sensor 1: normal in output signal
- Boost pressure sensor: normal in output signal
- Atmospheric pressure sensor: normal in output signal
- Water temperature sensor: normal in output signal
- Intake throttle: normal in output signal

[Control effected by electronic control unit during fault]
- Effects no special control.

[Probable cause of trouble]
- Short-circuit of harness between electronic control unit and waste gate magnetic valve
- Abnormality of each connector
- Abnormality of waste gate magnetic valve
- Abnormality in electronic control unit

[Recoverability]
<Control during fault>
- Recovered if signal becomes normal with starter switch in ON position.

<Warning lamp>
- Extinguished at 4th driving cycle after normal signal is input.

<Fault code>
- Automatically cleared at 40th warm up cycle after warning lamp is extinguished. (To clear as desired, erase from the memory.)

Driving cycle : “Starter switch ON to start engine till starter switch OFF” constitutes 1 driving cycle.
Warm up cycle : “Starter switch ON to start engine till starter switch OFF after coolant temperature increased and engine warmed up” constitutes 1 warm up cycle.

[Electronic Control Unit Connection Diagram]

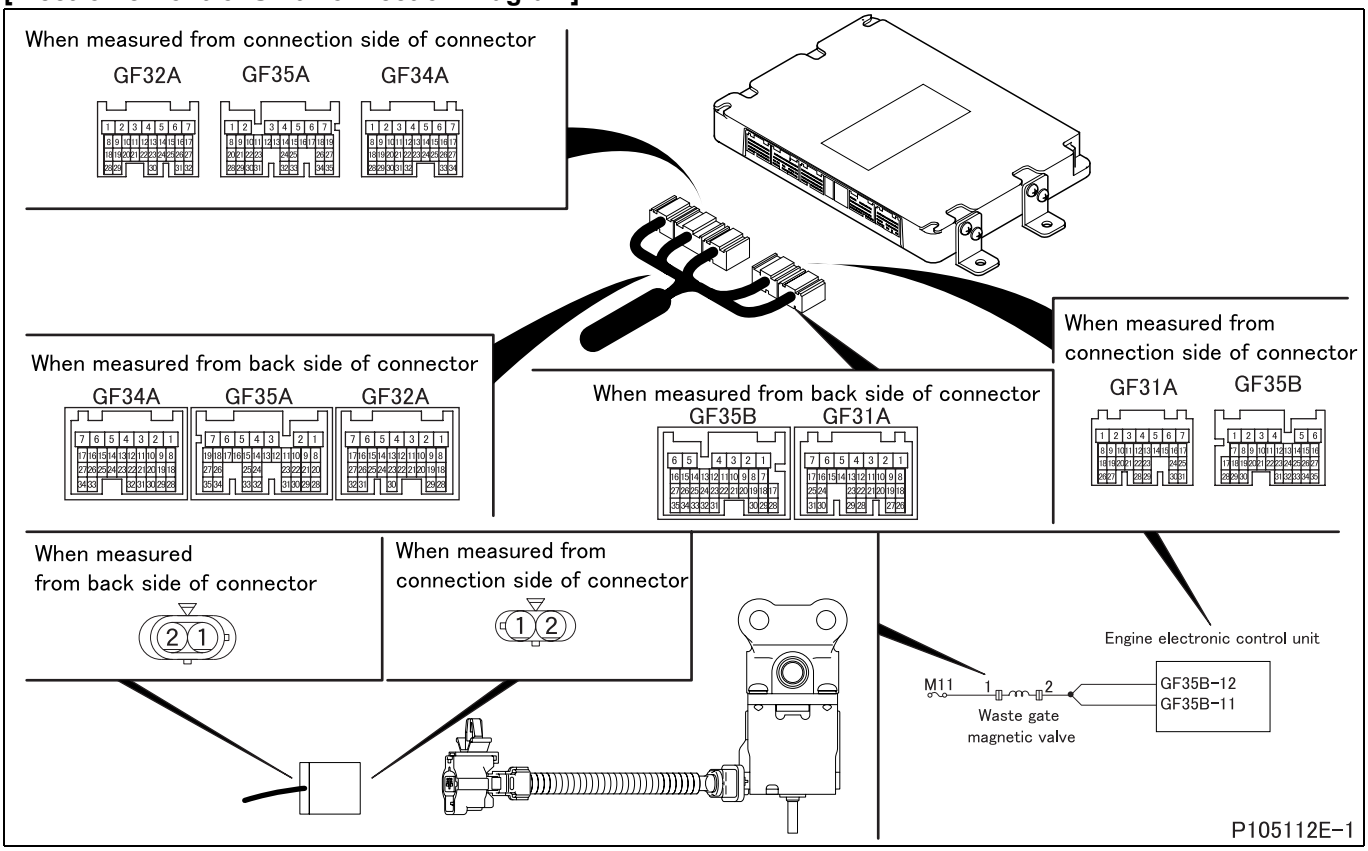

[Parts Identification and Location]

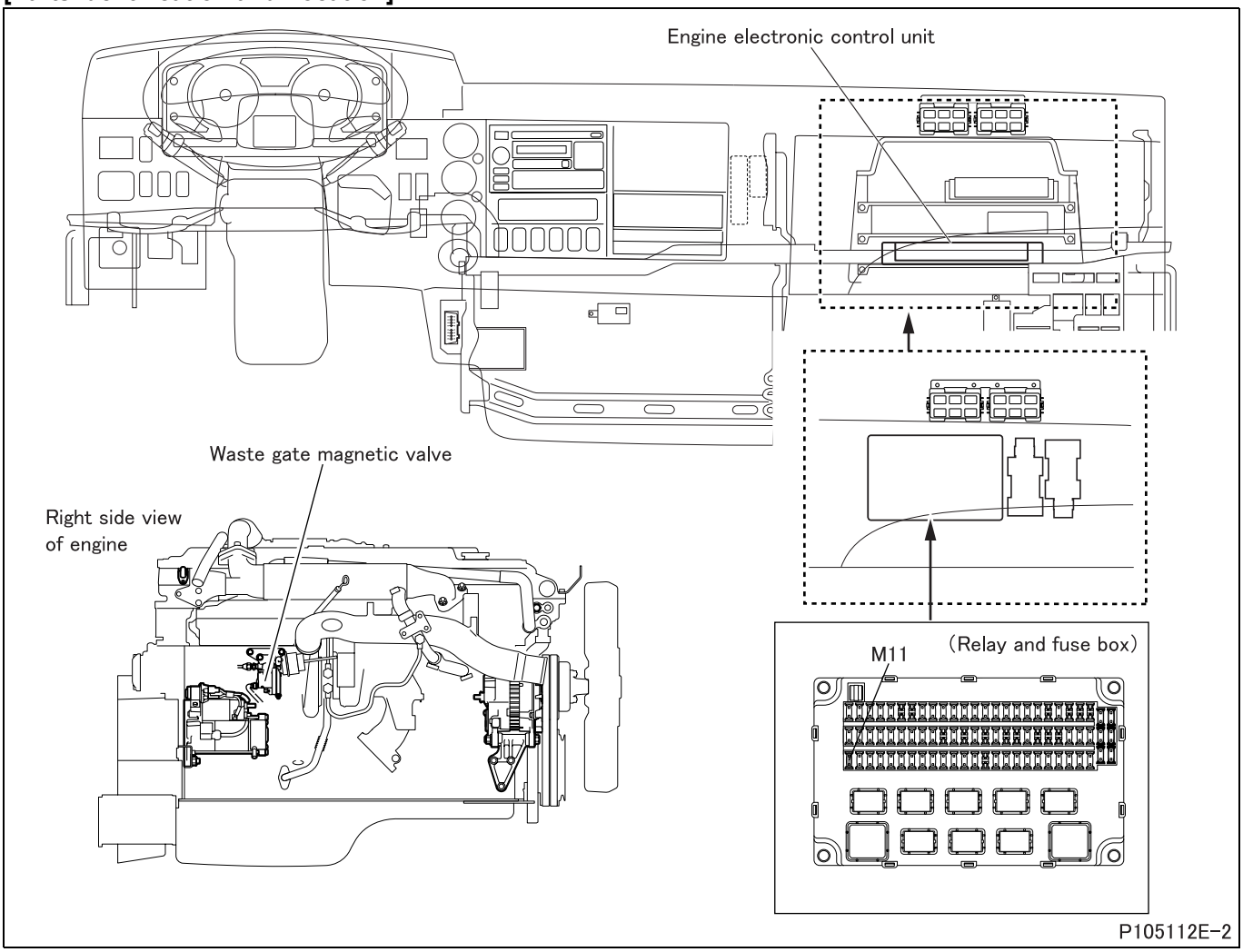

[Fault diagnosis]

- Perform checks in the sequence of the following steps.

Step 1	Inspection items		Inspection by control data
	Maintenance item		Perform actuator test item No. A3 “W/G M/V”.
	Inspection condition		• Starter switch: ON • Engine start: At idle
	Requirements		Waste gate magnetic valve operation sound is noted (automatic reset after 15 seconds)
	Inspection result (Is the judging standard satisfied?)	YES	Go to transient fault (see Gr00.).
		NO	Go to step 2.

Step 2	Inspection items		Inspection of electronic control unit connector
	Maintenance item		Inspection of connector
	Inspection condition		–
	Requirements		• Connector is properly connected. • No trace of water entry is found. • No corrosion is found in terminal. • Connection to terminal is appropriate.
	Inspection result (Is the judging standard satisfied?)	YES	Go to step 3.
		NO	Modify connector.

Step 3	Inspection items		Inspection of waste gate magnetic valve connector
	Maintenance item		Inspection of connector
	Inspection condition		–
	Requirements		• Connector is properly connected. • No trace of water entry is found. • No corrosion is found in terminal. • Connection to terminal is appropriate.
	Inspection result (Is the judging standard satisfied?)	YES	Go to step 4.
		NO	Modify connector.

Step 4	Inspection items		Inspection of waste gate magnetic valve unit
	Maintenance item		Measure minimum operating voltage when waste gate magnetic valve operates (judge by operation sound).
	Inspection condition		Gradually increase from zero the voltage applied to terminals No. 1 (+) and 2 (–).
	Requirements		9 V or less
	Inspection result (Is the judging standard satisfied?)	YES	Go to step 5.
		NO	Replacement of waste gate magnetic valve

<Step 4 inspection diagram>

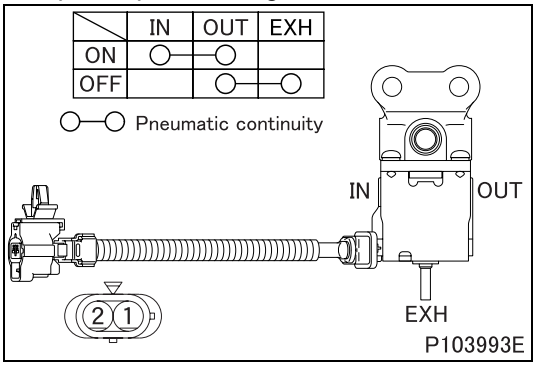

Step 5	Inspection items		Inspection of harness between waste gate magnetic valve and fuse
	Maintenance item		Check circuit between waste gate magnetic valve connector terminal No. 1 and fuse (M11).
	Inspection condition		Disconnect each device from harness and measure from connection side of harness connector.
	Requirements		There is continuity.
	Inspection result (Is the judging standard satisfied?)	YES	Go to step 6.
		NO	Modify harness.

Step 6	Inspection items		Inspection of harness between waste gate magnetic valve and electronic control unit
	Maintenance item		Check circuit between waste gate magnetic valve connector terminal No. 2 and electronic control unit connector (GF35B) terminal No. 11 or 12.
	Inspection condition		Disconnect each device from harness and measure from connection side of harness connector.
	Requirements		There is continuity.
	Inspection result (Is the judging standard satisfied?)	YES	Go to step 7.
		NO	Modify harness.

Step 7	Inspection items		Inspection by control data
	Maintenance item		Perform actuator test item No. A3 “W/G M/V”.
	Inspection condition		• Starter switch: ON • Engine start: At idle
	Requirements		Waste gate magnetic valve operation sound is noted (automatic reset after 15 seconds)
	Inspection result (Is the judging standard satisfied?)	YES	Go to transient fault (See Gr00.).
		NO	Replacement of electronic control unit

[Fault code]
Diagnosis code: P0245/Flash code: 51
[Monitor]
Abnormality of waste gate magnetic valve
[Fault (outline)]
- Short circuit ground
- Open circuit

[Diagnosis check]
- Waste gate magnetic valve circuit is monitored for fault.

[Code generation condition]
- Waste gate magnetic valve circuit remains shorted to ground or open as detected for approx. 1 second. (Warning lamp is lit and diagnosis code is displayed on second establishment of code generation condition.)

[Diagnosis check timing]
- When code generation condition is established after starter switch ON

[Diagnostic requirement]
- 2 seconds passed after starter switch ON
- 2 seconds passed after cranking
- Battery voltage: normal
- Waste gate magnetic valve: inactive

[Control effected by electronic control unit during fault]
- Automatic diesel particulate filter regeneration is stopped.

[Probable cause of trouble]
- Short-circuit of harness between electronic control unit and waste gate magnetic valve
- Abnormality of each connector
- Abnormality of waste gate magnetic valve
- Abnormality in electronic control unit

[Recoverability]
<Control during fault>
- Recovered if signal becomes normal with starter switch in ON position.

<Warning lamp>
- Extinguished at 4th driving cycle after normal signal is input.

<Fault code>
- Automatically cleared at 40th warm up cycle after warning lamp is extinguished. (To clear as desired, erase from the memory.)

Driving cycle : “Starter switch ON to start engine till starter switch OFF” constitutes 1 driving cycle.
Warm up cycle : “Starter switch ON to start engine till starter switch OFF after coolant temperature increased and engine warmed up” constitutes 1 warm up cycle.

[Electronic Control Unit Connection Diagram]

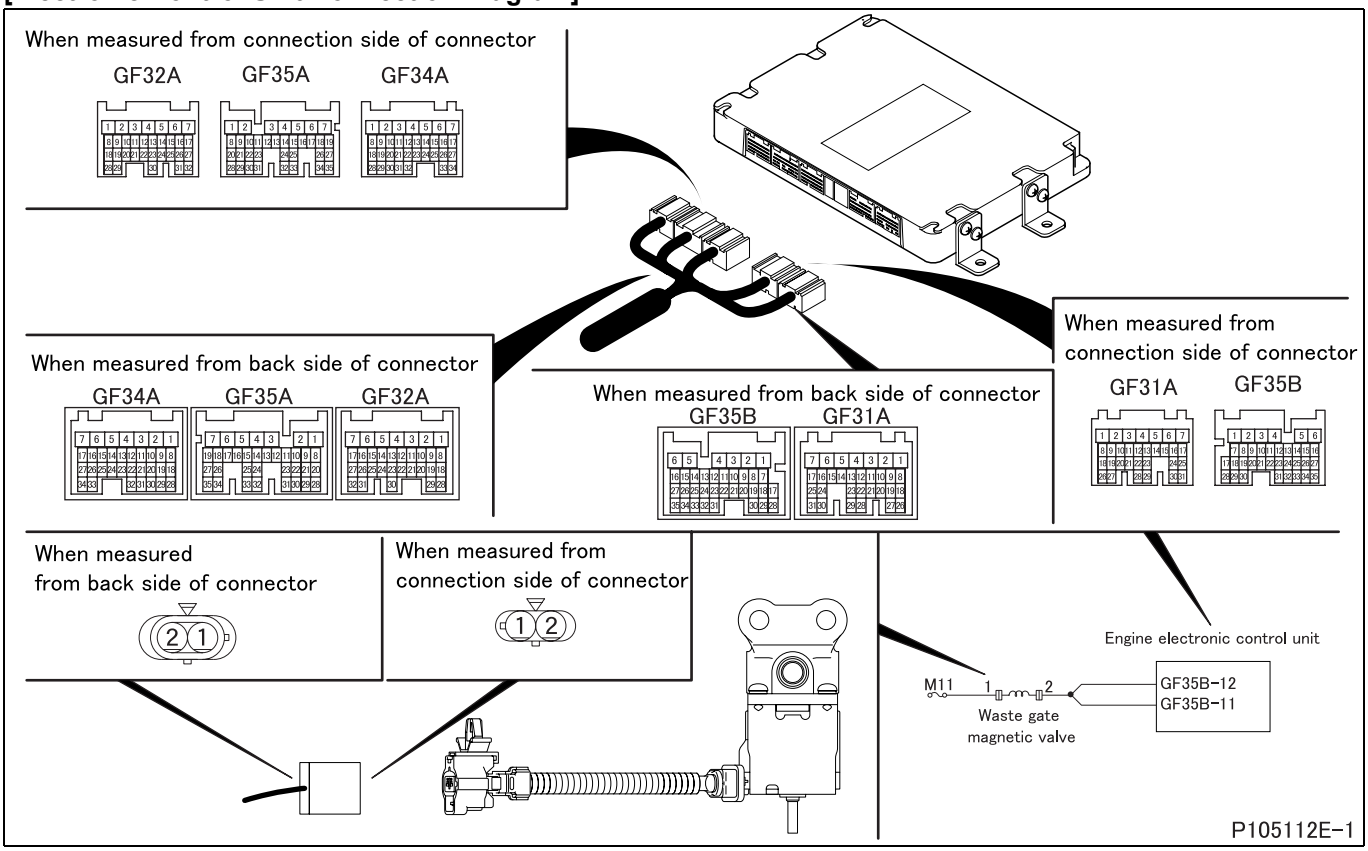

[Parts Identification and Location]

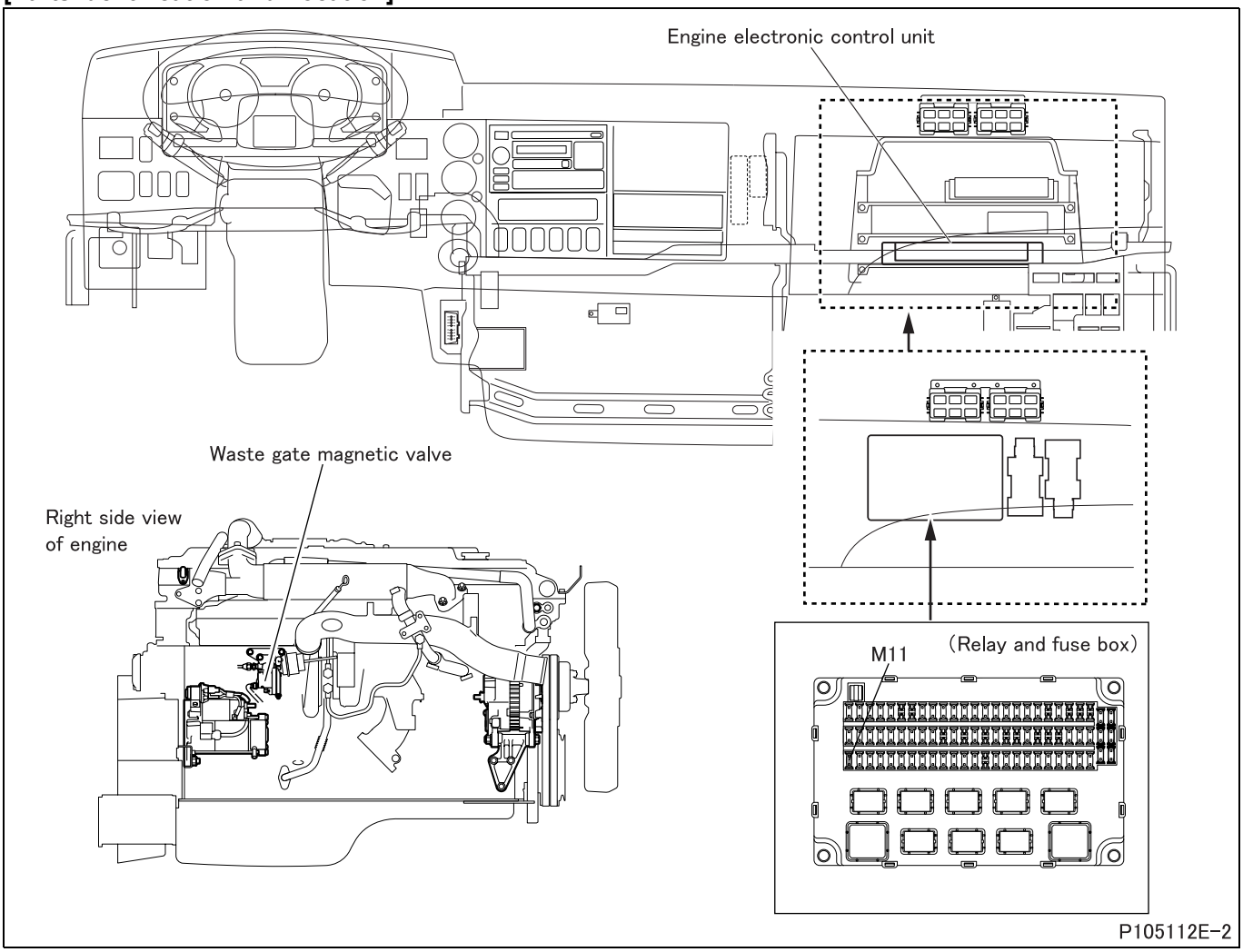

[Fault diagnosis]

- Perform checks in the sequence of the following steps.

Step 1	Inspection items		Inspection by control data
	Maintenance item		Perform actuator test item No. A3 “W/G M/V”.
	Inspection condition		• Starter switch: ON • Engine start: At idle
	Requirements		Waste gate magnetic valve operation sound is noted (automatic reset after 15 seconds)
	Inspection result (Is the judging standard satisfied?)	YES	Go to transient fault (see Gr00.).
		NO	Go to step 2.

Step 2	Inspection items		Inspection of electronic control unit connector
	Maintenance item		Inspection of connector
	Inspection condition		–
	Requirements		• Connector is properly connected. • No trace of water entry is found. • No corrosion is found in terminal. • Connection to terminal is appropriate.
	Inspection result (Is the judging standard satisfied?)	YES	Go to step 3.
		NO	Modify connector.

Step 3	Inspection items		Inspection of waste gate magnetic valve connector
	Maintenance item		Inspection of connector
	Inspection condition		–
	Requirements		• Connector is properly connected. • No trace of water entry is found. • No corrosion is found in terminal. • Connection to terminal is appropriate.
	Inspection result (Is the judging standard satisfied?)	YES	Go to step 4.
		NO	Modify connector.

Step 4	Inspection items		Inspection of waste gate magnetic valve unit
	Maintenance item		Measure minimum operating voltage when waste gate magnetic valve operates (judge by operation sound).
	Inspection condition		Gradually increase from zero the voltage applied to terminals No. 1 (+) and 2 (–).
	Requirements		9 V or less
	Inspection result (Is the judging standard satisfied?)	YES	Go to step 5.
		NO	Replacement of waste gate magnetic valve

<Step 4 inspection diagram>

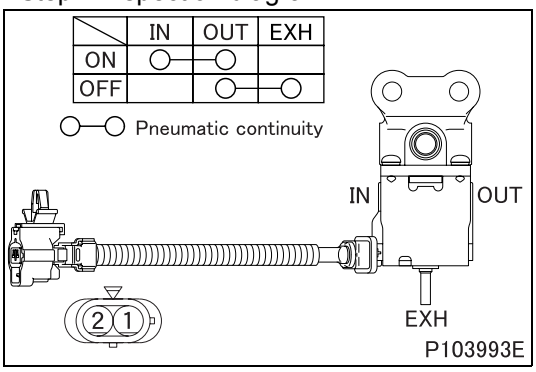

Step 5	Inspection items		Inspection of harness between waste gate magnetic valve and fuse
	Maintenance item		Check circuit between waste gate magnetic valve connector terminal No. 1 and fuse (M11).
	Inspection condition		Disconnect each device from harness and measure from connection side of harness connector.
	Requirements		There is continuity.
	Inspection result (Is the judging standard satisfied?)	YES	Go to step 6.
		NO	Modify harness.

Step 6	Inspection items		Inspection of harness between waste gate magnetic valve and electronic control unit
	Maintenance item		Check circuit between waste gate magnetic valve connector terminal No. 2 and electronic control unit connector (GF35B) terminal No. 11 or 12.
	Inspection condition		Disconnect each device from harness and measure from connection side of harness connector.
	Requirements		There is continuity.
	Inspection result (Is the judging standard satisfied?)	YES	Go to step 7.
		NO	Modify harness.

Step 7	Inspection items		Inspection by control data
	Maintenance item		Perform actuator test item No. A3 “W/G M/V”.
	Inspection condition		• Starter switch: ON • Engine start: At idle
	Requirements		Waste gate magnetic valve operation sound is noted (automatic reset after 15 seconds)
	Inspection result (Is the judging standard satisfied?)	YES	Go to transient fault (See Gr00.).
		NO	Replacement of electronic control unit

[Fault code]
Diagnosis code: P0246/Flash code: 51
[Monitor]
Abnormality of waste gate magnetic valve
[Fault (outline)]
Short circuit battery
[Diagnosis check]
- Waste gate magnetic valve circuit is monitored for fault.

[Code generation condition]
- Waste gate magnetic valve circuit remains shorted to battery as detected for approx. 1 second.
  (Warning lamp is lit and diagnosis code is displayed on second establishment of code generation condition.)

[Diagnosis check timing]
- When code generation condition is established after starter switch ON

[Diagnostic requirement]
- 2 seconds passed after starter switch ON
- 2 seconds passed after cranking
- Battery voltage: normal
- Waste gate magnetic valve: active

[Control effected by electronic control unit during fault]
- Waste gate magnetic valve control is stopped.
- Automatic diesel particulate filter regeneration is stopped.

[Probable cause of trouble]
- Short-circuit of harness between electronic control unit and waste gate magnetic valve
- Abnormality of each connector
- Abnormality of waste gate magnetic valve
- Abnormality in electronic control unit

[Recoverability]
<Control during fault>
- Recovered if signal becomes normal with starter switch in ON position.

<Warning lamp>
- Extinguished at 4th driving cycle after normal signal is input.

<Fault code>
- Automatically cleared at 40th warm up cycle after warning lamp is extinguished. (To clear as desired, erase from the memory.)

Driving cycle : “Starter switch ON to start engine till starter switch OFF” constitutes 1 driving cycle.
Warm up cycle : “Starter switch ON to start engine till starter switch OFF after coolant temperature increased and engine warmed up” constitutes 1 warm up cycle.

[Fault diagnosis]
- Perform checks in the sequence of the following steps.

Step 1	Inspection items		Inspection by control data
	Maintenance item		Perform actuator test item No. A3 “W/G M/V”.
	Inspection condition		• Starter switch: ON • Engine start: At idle
	Requirements		Waste gate magnetic valve operation sound is noted (automatic reset after 15 seconds)
	Inspection result (Is the judging standard satisfied?)	YES	Go to transient fault (see Gr00.).
		NO	Go to step 2.

Step 2	Inspection items		Inspection of electronic control unit connector
	Maintenance item		Inspection of connector
	Inspection condition		–
	Requirements		• Connector is properly connected. • No trace of water entry is found. • No corrosion is found in terminal. • Connection to terminal is appropriate.
	Inspection result (Is the judging standard satisfied?)	YES	Go to step 3.
		NO	Modify connector.

Step 3	Inspection items		Inspection of waste gate magnetic valve connector
	Maintenance item		Inspection of connector
	Inspection condition		–
	Requirements		• Connector is properly connected. • No trace of water entry is found. • No corrosion is found in terminal. • Connection to terminal is appropriate.
	Inspection result (Is the judging standard satisfied?)	YES	Go to step 4.
		NO	Modify connector.

Step 4	Inspection items		Inspection of waste gate magnetic valve unit
	Maintenance item		Measure minimum operating voltage when waste gate magnetic valve operates (judge by operation sound).
	Inspection condition		Gradually increase from zero the voltage applied to terminals No. 1 (+) and 2 (–).
	Requirements		9 V or less
	Inspection result (Is the judging standard satisfied?)	YES	Go to step 5.
		NO	Replacement of waste gate magnetic valve

<Step 4 inspection diagram>

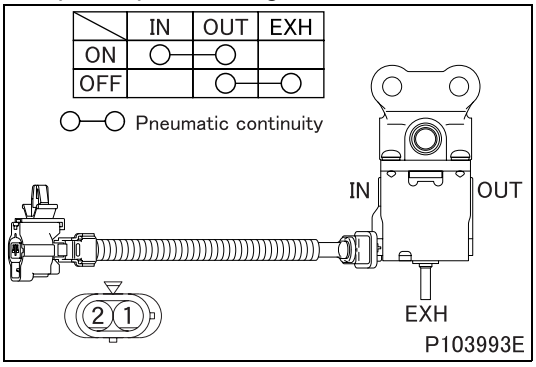

Step 5	Inspection items		Inspection of harness between waste gate magnetic valve and fuse
	Maintenance item		Check circuit between waste gate magnetic valve connector terminal No. 1 and fuse (M11).
	Inspection condition		Disconnect each device from harness and measure from connection side of harness connector.
	Requirements		There is continuity.
	Inspection result (Is the judging standard satisfied?)	YES	Go to step 6.
		NO	Modify harness.

Step 6	Inspection items		Inspection of harness between waste gate magnetic valve and electronic control unit
	Maintenance item		Check circuit between waste gate magnetic valve connector terminal No. 2 and electronic control unit connector (GF35B) terminal No. 11 or 12.
	Inspection condition		Disconnect each device from harness and measure from connection side of harness connector.
	Requirements		There is continuity.
	Inspection result (Is the judging standard satisfied?)	YES	Go to step 7.
		NO	Modify harness.

Step 7	Inspection items		Inspection by control data
	Maintenance item		Perform actuator test item No. A3 “W/G M/V”.
	Inspection condition		• Starter switch: ON • Engine start: At idle
	Requirements		Waste gate magnetic valve operation sound is noted (automatic reset after 15 seconds)
	Inspection result (Is the judging standard satisfied?)	YES	Go to transient fault (See Gr00.).
		NO	Replacement of electronic control unit

[Fault code]
Diagnosis code: P0253/Flash code: 22
[Monitor]
Abnormality of common rail pressure
[Fault (outline)]
Too large rail pressure (too high)
[Diagnosis check]
- Common rail pressure is monitored.

[Code generation condition]
- Actual common rail pressure remains over 122.5% for approx. 0.3 second. (common rail pressure: over pressure limiter actuation level)
  (Warning lamp is lit and diagnosis code is displayed on first establishment of code generation condition.)

[Diagnosis check timing]
- When code generation condition is established after starter switch ON

[Diagnostic requirement]
- 2 seconds passed after starter switch ON
- 2 seconds passed after cranking
- Battery voltage: normal

[Control effected by electronic control unit during fault]
- Common rail system is stopped. (Engine is immediately stopped.)

[Probable cause of trouble]
- Abnormality of fuel pipe
- Abnormality of supply pump
- Abnormality of pressure limiter
- Abnormality of injector

[Recoverability]
<Control during fault>
- Recovered if actual common rail pressure becomes below 92.5% when starter switch is turned OFF to ON.

<Warning lamp>
- Extinguished after input of normal signal.

<Fault code>
- If code recovered to normal, automatically cleared at 40th warm up cycle after warning lamp is lit. (To clear as desired, erase from the memory.)

Warm up cycle : “Starter switch ON to start engine till starter switch OFF after coolant temperature increased and engine warmed up” constitutes 1 warm up cycle.

[Fault diagnosis]
- Perform checks in the sequence of the following steps.

Step 1	Inspection items		Inspection by control data
	Maintenance item		Check if following diagnosis codes occur simultaneously. • P0191 “CRS Pressure SNSR (Plausibility)” • P0192 “CRS Pressure SNSR (Low)” • P0193 “CRS Pressure SNSR (High)” • P0253 “Common Rail Pressure Defect” • P0254 “Common Rail Pressure Defect” • P0256 “Common Rail Pressure High (Pump)” • P0257 “Common Rail Pressure Low (Pump)” • P0259 “Common Rail Pressure High (Pump)”
	Inspection condition		• Starter switch: ON • Engine not started
	Requirements		The diagnosis code does not occur.
	Inspection result (Is the judging standard satisfied?)	YES	Go to step 2.
		NO	Inspect diagnosis code that is occurring.

Step 2	Inspection items		Inspection of low pressure piping (fuel return pipe)
	Maintenance item		Check return pipe or hose for blocking.
	Inspection condition		Starter switch: OFF
	Requirements		There is no blocking on pipe or hose.
	Inspection result (Is the judging standard satisfied?)	YES	Go to step 3.
		NO	Correct and replace return pipe or hose.

Step 3	Inspection items		Inspection of rail (pressure limiter) (contact DENSO Service Station) or replace.
	Maintenance item		–
	Inspection condition		–
	Requirements		Problem is solved by repairing and replacing rail (pressure limiter).
	Inspection result (Is the judging standard satisfied?)	YES	–
		NO	Go to step 4.

Step 4	Inspection items		Replacement of supply pump
	Maintenance item		–
	Inspection condition		–
	Requirements		Problem is solved by replacing supply pump.
	Inspection result (Is the judging standard satisfied?)	YES	–
		NO	Replacement of injectors (six) (If there is any abnormality, replace electronic control unit.)

[Fault code]
Diagnosis code: P0254/Flash code: 23
[Monitor]
Abnormality of common rail pressure
[Fault (outline)]
Too large rail pressure (high)
[Diagnosis check]
- Common rail pressure is monitored.

[Code generation condition]
- Actual common rail pressure remains over 98.5% for approx. 0.3 second. (common rail pressure: below pressure limiter actuation level)
  (Warning lamp is lit and diagnosis code is displayed on first establishment of code generation condition.)

[Diagnosis check timing]
- When code generation condition is established after starter switch ON

[Diagnostic requirement]
- 2 seconds passed after starter switch ON
- 2 seconds passed after cranking
- Battery voltage: normal

[Control effected by electronic control unit during fault]
- Injection quantity is limited.
- Main injection only is allowed.
- Common rail pressure is limited.
- Exhaust gas recirculation control is stopped.
- Throttle control is stopped.
- Diesel particulate filter regeneration (manual or automatic) is stopped.
- Auto cruise control is stopped.

[Probable cause of trouble]
- Abnormality of fuel pipe
- Abnormality of supply pump
- Abnormality of common rail unit
- Abnormality of injector

[Recoverability]
<Control during fault>
- Recovered if signal becomes normal when starter switch is turned OFF to ON (power supply resumed to electronic control unit).

<Warning lamp>
- Extinguished after input of normal signal.

<Fault code>
- If code recovered to normal, automatically cleared at 40th warm up cycle after warning lamp is lit. (To clear as desired, erase from the memory.)

Warm up cycle : “Starter switch ON to start engine till starter switch OFF after coolant temperature increased and engine warmed up” constitutes 1 warm up cycle.

[Fault diagnosis]

- Perform checks in the sequence of the following steps.

Step 1	Inspection items		Inspection by control data
	Maintenance item		Check if following diagnosis codes occur simultaneously. • P0191 “CRS Pressure SNSR (Plausibility)” • P0192 “CRS Pressure SNSR (Low)” • P0193 “CRS Pressure SNSR (High)” • P0253 “Common Rail Pressure Defect” • P0254 “Common Rail Pressure Defect” • P0256 “Common Rail Pressure High (Pump)” • P0257 “Common Rail Pressure Low (Pump)” • P0259 “Common Rail Pressure High (Pump)”
	Inspection condition		• Starter switch: ON • Engine not started
	Requirements		The diagnosis code does not occur.
	Inspection result (Is the judging standard satisfied?)	YES	Go to step 2.
		NO	Inspect diagnosis code that is occurring.

Step 2	Inspection items		Inspection of injection pipe
	Maintenance item		Check injection pipe for clogging.
	Inspection condition		Starter switch: OFF
	Requirements		Not clogged
	Inspection result (Is the judging standard satisfied?)	YES	Go to step 3.
		NO	Cleaning of injection pipe.

Step 3	Inspection items		Inspection of rail (pressure limiter) (contact DENSO Service Station) or replace.
	Maintenance item		–
	Inspection condition		–
	Requirements		Problem is solved by repairing and replacing rail (pressure limiter).
	Inspection result (Is the judging standard satisfied?)	YES	–
		NO	Go to step 4.

Step 4	Inspection items		Replacement of supply pump
	Maintenance item		–
	Inspection condition		–
	Requirements		Problem is solved by replacing supply pump.
	Inspection result (Is the judging standard satisfied?)	YES	–
		NO	Replacement of injectors (six) (If there is any abnormality, replace electronic control unit.)

[Fault code]
Diagnosis code: P0256/Flash code: 23
[Monitor]
Supply pump signal out of serviceable range
[Fault (outline)]
Too large supply pump discharge pressure
[Diagnosis check]
- Supply pump discharge pressure is monitored according to rail pressure.

[Code generation condition]
Either of the following states caused by excessive rail pressure
(Warning lamp is lit and diagnosis code is displayed on first establishment of code generation condition.)
- Pump exceeds time allowed to operate in seizure range of service (approx. 10 seconds).
- Pump exceeds time allowed to operate in short-time range of service (approx. 6 minutes).

[Diagnosis check timing]
- When code generation condition is established after starter switch ON

[Diagnostic requirement]
- Rotation pulse input: available

[Control effected by electronic control unit during fault]
- Injection quantity is limited.
- Main injection only is allowed.
- Common rail pressure is limited.
- Exhaust gas recirculation control is stopped.
- Throttle control is stopped.
- Diesel particulate filter regeneration (manual or automatic) is stopped.
- Auto cruise control is stopped.

[Probable cause of trouble]
- Abnormality of fuel pipe
- Abnormality of supply pump
- Possibility is high that supply pump is damaged. Replace supply pump even if back to normal. Also, check high-pressure fuel piping for abnormality.

[Recoverability]
<Control during fault>
- Recovered if signal becomes normal when starter switch is turned OFF to ON (power supply resumed to electronic control unit).
  Possibility is high that supply pump is damaged when this diagnosis code occurs. Replace supply pump even if back to normal.

<Warning lamp>
- Extinguished after input of normal signal.

<Fault code>
- If code recovered to normal, automatically cleared at 40th warm up cycle after warning lamp is lit. (To clear as desired, erase from the memory.)

Warm up cycle : “Starter switch ON to start engine till starter switch OFF after coolant temperature increased and engine warmed up” constitutes 1 warm up cycle.

[Fault code]
Diagnosis code: P0257/Flash code: 23
[Monitor]
Abnormality of delivery by supply pump
[Fault (outline)]
Abnormal supply pump discharge pressure (too rapid pressure change)
[Diagnosis check]
- Supply pump pressurizing section (cylinder) is checked for fracture.

[Code generation condition]
- Supply pump delivery rate in current cycle is significantly larger than that in the previous cycle (1.5 times). (Warning lamp is lit and diagnosis code is displayed on first establishment of code generation condition.)

[Diagnosis check timing]
- When code generation condition is established after starter switch ON

[Diagnostic requirement]
- Rotation pulse input: available

[Control effected by electronic control unit during fault]
- Injection quantity is limited.
- Main injection only is allowed.
- Common rail pressure is limited.
- Exhaust gas recirculation control is stopped.
- Throttle control is stopped.
- Diesel particulate filter regeneration (manual or automatic) is stopped.
- Auto cruise control is stopped.

[Probable cause of trouble]
- Inspection of supply pump for cause of abnormality (contact DENSO Service Station) or replace.

[Recoverability]
<Control during fault>
- Recovered if signal becomes normal when starter switch is turned OFF to ON (power supply resumed to electronic control unit).

<Warning lamp>
- Extinguished after input of normal signal.

<Fault code>
- If code recovered to normal, automatically cleared at 40th warm up cycle after warning lamp is lit. (To clear as desired, erase from the memory.)

Warm up cycle : “Starter switch ON to start engine till starter switch OFF after coolant temperature increased and engine warmed up” constitutes 1 warm up cycle.

[Fault code]
Diagnosis code: P0259/Flash code: 23
[Monitor]
Supply pump signal out of serviceable range
[Fault (outline)]
Large supply pump discharge pressure
[Diagnosis check]
- Checking is made for time duration of supply pump staying in the range where seizure is more likely to occur as discharge pressure of supply pump is increased during operation at low speeds.

[Code generation condition]
- Pump exceeds time allowed to operate in seizure range of service (approx. 10 seconds).
  (Warning lamp is lit and diagnosis code is displayed on first establishment of code generation condition.)

[Diagnosis check timing]
- When code generation condition is established after starter switch ON

[Diagnostic requirement]
- Rotation pulse input: available

[Control effected by electronic control unit during fault]
- Injection quantity is limited.
- Main injection only is allowed.
- Common rail pressure is limited.
- Exhaust gas recirculation control is stopped.
- Throttle control is stopped.
- Diesel particulate filter regeneration (manual or automatic) is stopped.
- Auto cruise control is stopped.

[Probable cause of trouble]
- Abnormality of fuel pipe
- Abnormality of supply pump
- Possibility is high that supply pump is damaged. Replace supply pump even if back to normal. Also, check high-pressure fuel piping for abnormality.

[Recoverability]
<Control during fault>
- Recovered if signal becomes normal when starter switch is turned OFF to ON (power supply resumed to electronic control unit).

<Warning lamp>
- Extinguished after input of normal signal.

<Fault code>
- If code recovered to normal, automatically cleared at 40th warm up cycle after warning lamp is lit. (To clear as desired, erase from the memory.)

Warm up cycle : “Starter switch ON to start engine till starter switch OFF after coolant temperature increased and engine warmed up” constitutes 1 warm up cycle.

[Fault code]
Diagnosis code: P0336/Flash code: 15
[Monitor]
Abnormality of engine speed sensor
[Fault (outline)]
- No pulse check
- Gap phase shift

[Diagnosis check]
- Output pulses from engine speed sensor during engine operation are counted.

[Code generation condition]
- No pulse is received from engine speed sensor with one revolution of engine.
  (Warning lamp is lit and diagnosis code is displayed on first establishment of code generation condition.)

[Diagnosis check timing]
- When code generation condition is established after starter switch ON

[Diagnostic requirement]
- Battery voltage: normal

[Control effected by electronic control unit during fault]
- Injection quantity is limited.
- Exhaust gas recirculation control is stopped.
- Throttle control is stopped.
- Diesel particulate filter regeneration (manual or automatic) is stopped.
- Auto cruise control is stopped.

[Probable cause of trouble]
- Open-circuit or short-circuit of harness between electronic control unit and engine speed sensor
- Abnormality of each connector
- Abnormality of engine speed sensor
- Abnormality in electronic control unit

[Recoverability]
<Control during fault>
- Recovered if signal becomes normal with starter switch in ON position.

<Warning lamp>
- Extinguished at 4th driving cycle after normal signal is input.

<Fault code>
- Automatically cleared at 40th warm up cycle after warning lamp is extinguished. (To clear as desired, erase from the memory.)

Driving cycle : “Starter switch ON to start engine till starter switch OFF” constitutes 1 driving cycle.
Warm up cycle : “Starter switch ON to start engine till starter switch OFF after coolant temperature increased and engine warmed up” constitutes 1 warm up cycle.

[Electronic Control Unit Connection Diagram]

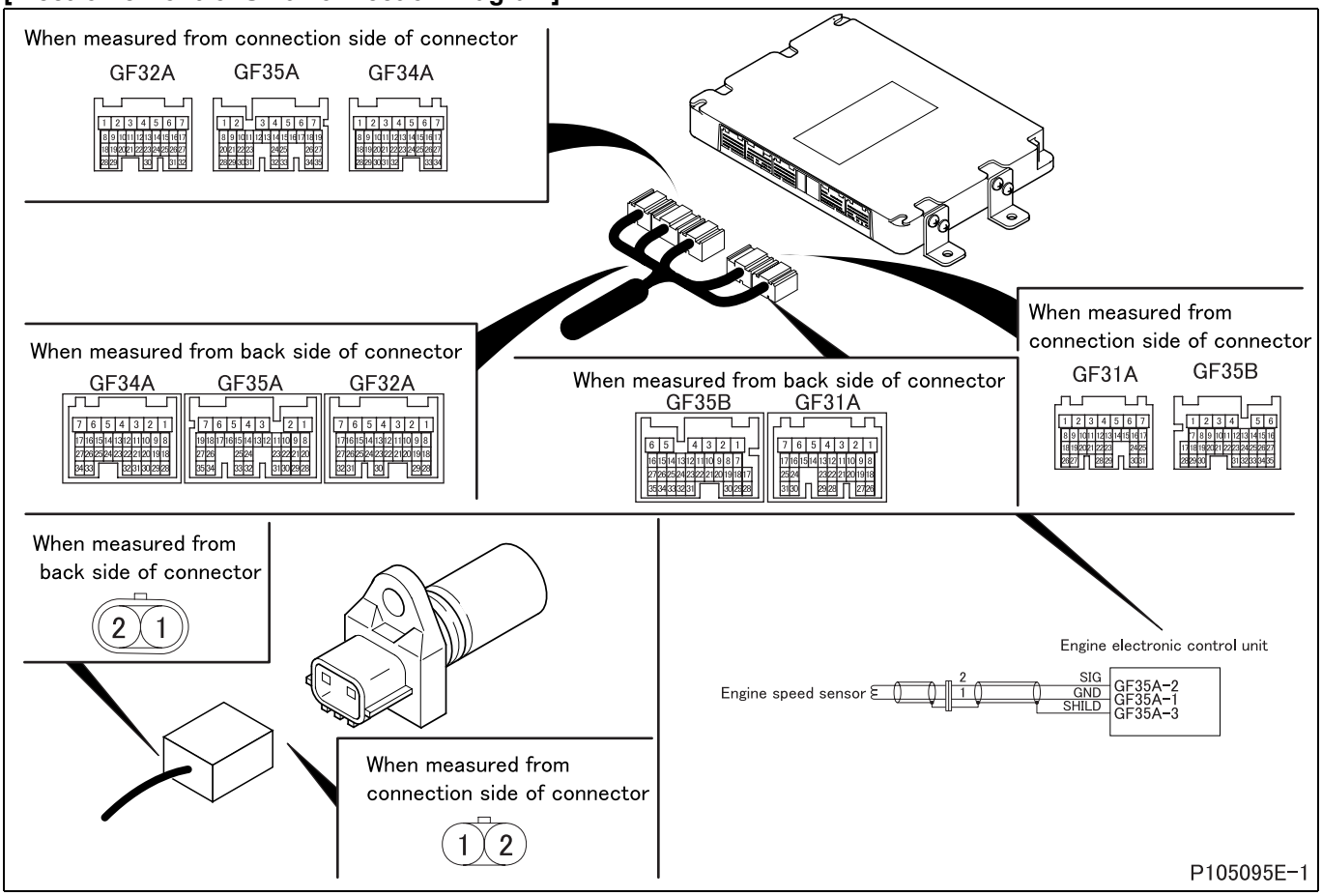

[Parts Identification and Location]

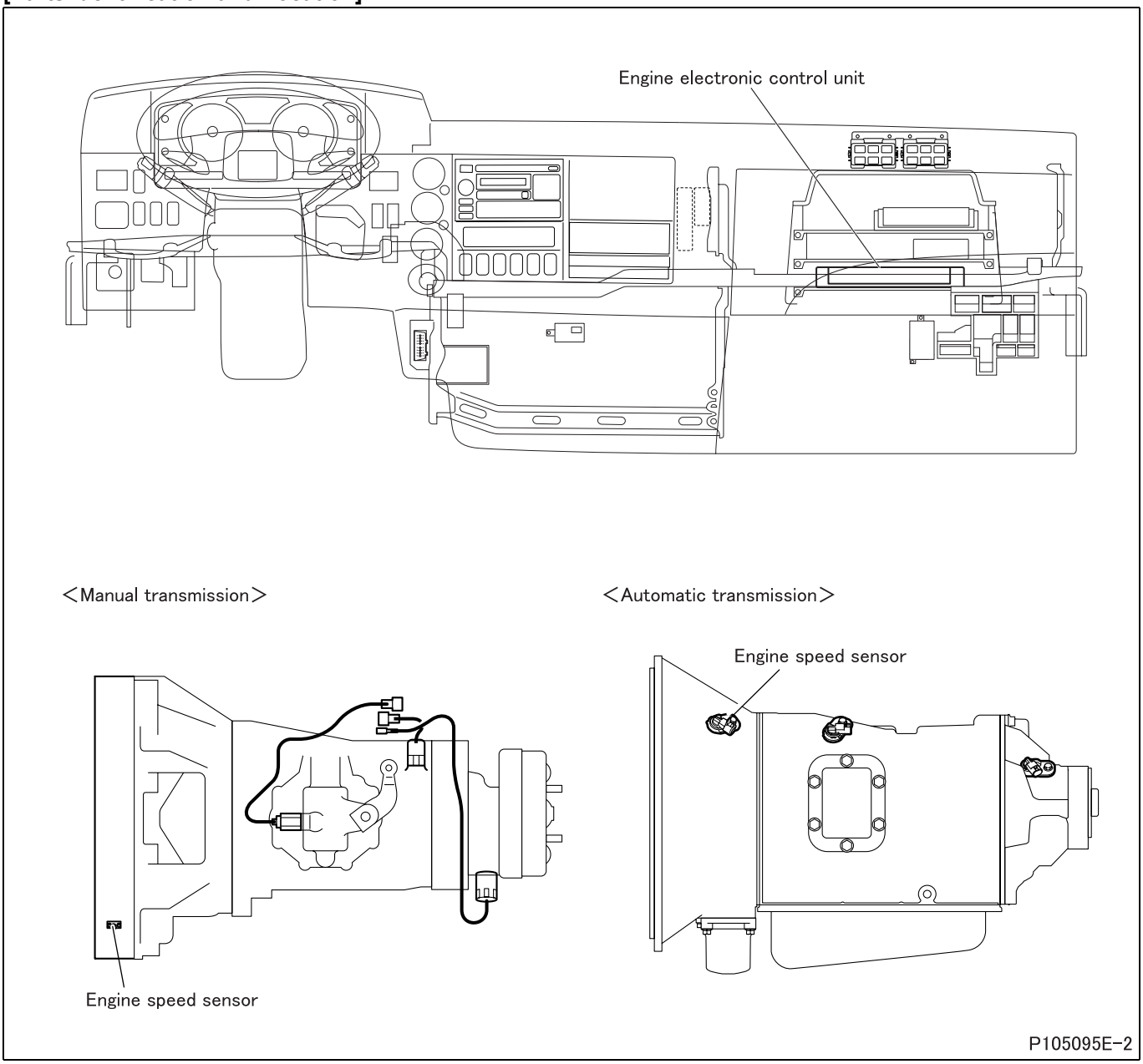

[Fault diagnosis]

- Perform checks in the sequence of the following steps.

Step 1	Inspection items		Inspection by control data
	Maintenance item		**<General Scanning Tool used>** • Measure item “Ne”. **<Multi-Use Tester used>** • Measure item No. 01 “Engine Revolution” of Service Data.
	Inspection condition		–
	Requirements		Same indication as tachometer is given.
	Inspection result (Is the judging standard satisfied?)	YES	Go to transient fault (See Gr00.).
		NO	Go to step 2.

Step 2	Inspection items		Inspection by electronic control unit connector
	Maintenance item		Measure value of resistance between connector (GF35A) terminal No. 1 and 2.
	Inspection condition		Disconnect electronic control unit from harness and measure from connection side of harness connector.
	Requirements		125.5 ± 17 Ω (20°C {68°F})
	Inspection result (Is the judging standard satisfied?)	YES	Go to step 3.
		NO	Go to step 4.

Step 3	Inspection items		Inspection of electronic control unit connector
	Maintenance item		Inspection of connector
	Inspection condition		–
	Requirements		• Connector is properly connected. • No trace of water entry is found. • No corrosion is found in terminal. • Connection to terminal is appropriate.
	Inspection result (Is the judging standard satisfied?)	YES	Go to step 8.
		NO	Modify connector.

Step 4	Inspection items		Inspection of engine speed sensor connector
	Maintenance item		Inspection of connector
	Inspection condition		–
	Requirements		• Connector is properly connected. • No trace of water entry is found. • No corrosion is found in terminal. • Connection to terminal is appropriate.
	Inspection result (Is the judging standard satisfied?)	YES	Go to step 5.
		NO	Modify connector.

Step 5	Inspection items		Inspection of engine speed sensor unit
	Maintenance item		Measure value of resistance between connector terminal No. 1 and 2.
	Inspection condition		–
	Requirements		125.5 ± 17 Ω (20°C {68°F})
	Inspection result (Is the judging standard satisfied?)	YES	Go to step 6.
		NO	Replacement of sensor

<Step 5 inspection diagram>

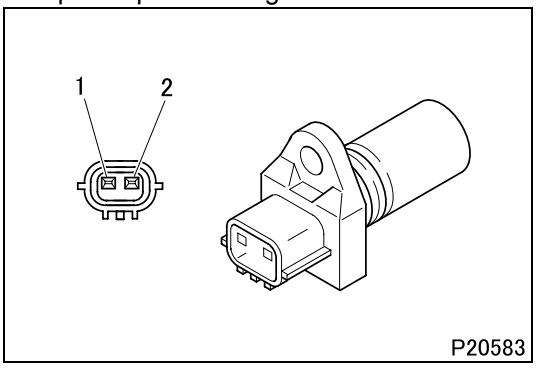

Step 6	Inspection items		Inspection of harness between electronic control unit and sensor (power supply)
	Maintenance item		Check circuit between sensor connector terminal No. 2 and electronic control unit connector (GF35A) terminal No. 2.
	Inspection condition		Disconnect each device from harness and measure from connection side of harness connector.
	Requirements		There is continuity.
	Inspection result (Is the judging standard satisfied?)	YES	Go to step 7.
		NO	Modify harness.

Step 7	Inspection items		Inspection of harness between electronic control unit and sensor (ground)
	Maintenance item		Check circuit between sensor connector terminal No. 1 and electronic control unit connector (GF35A) terminal No. 1.
	Inspection condition		Disconnect each device from harness and measure from connection side of harness connector.
	Requirements		There is continuity.
	Inspection result (Is the judging standard satisfied?)	YES	Go to step 8.
		NO	Modify harness.

Step 8	Inspection items		Inspection by control data
	Maintenance item		**<General Scanning Tool used>** • Measure item “Ne”. **<Multi-Use Tester used>** • Measure item No. 01 “Engine Revolution” of Service Data.
	Inspection condition		–
	Requirements		Same indication as tachometer is given.
	Inspection result (Is the judging standard satisfied?)	YES	Go to transient fault (See Gr00.).
		NO	Replacement of electronic control unit

[Fault code]
Diagnosis code: P0339/Flash code: 14
[Monitor]
Abnormality of engine speed sensor
[Fault (outline)]
Abnormal pulse count
[Diagnosis check]
- Output pulses from engine speed sensor during engine operation are counted.

[Code generation condition]
- Engine speed sensor input pulse count with one revolution of engine is not the same as last.
  (Warning lamp is lit and diagnosis code is displayed on first establishment of code generation condition.)

[Diagnosis check timing]
- When code generation condition is established after starter switch ON

[Diagnostic requirement]
- Battery voltage: normal
- Engine state: not in stalled condition (inputs available from engine speed sensor)
- Engine speed: more than 350 rpm

[Control effected by electronic control unit during fault]
- Injection quantity is limited.
- Exhaust gas recirculation control is stopped.
- Throttle control is stopped.
- Diesel particulate filter regeneration (manual or automatic) is stopped.
- Auto cruise control is stopped.

[Probable cause of trouble]
- Open-circuit or short-circuit of harness between electronic control unit and engine speed sensor
- Abnormality of each connector
- Abnormality of engine speed sensor
- Abnormality in electronic control unit

[Recoverability]
<Control during fault>
- Recovered if signal becomes normal with starter switch in ON position.

<Warning lamp>
- Extinguished at 4th driving cycle after normal signal is input.

<Fault code>
- Automatically cleared at 40th warm up cycle after warning lamp is extinguished. (To clear as desired, erase from the memory.)

Driving cycle : “Starter switch ON to start engine till starter switch OFF” constitutes 1 driving cycle.
Warm up cycle : “Starter switch ON to start engine till starter switch OFF after coolant temperature increased and engine warmed up” constitutes 1 warm up cycle.

[Electronic Control Unit Connection Diagram]

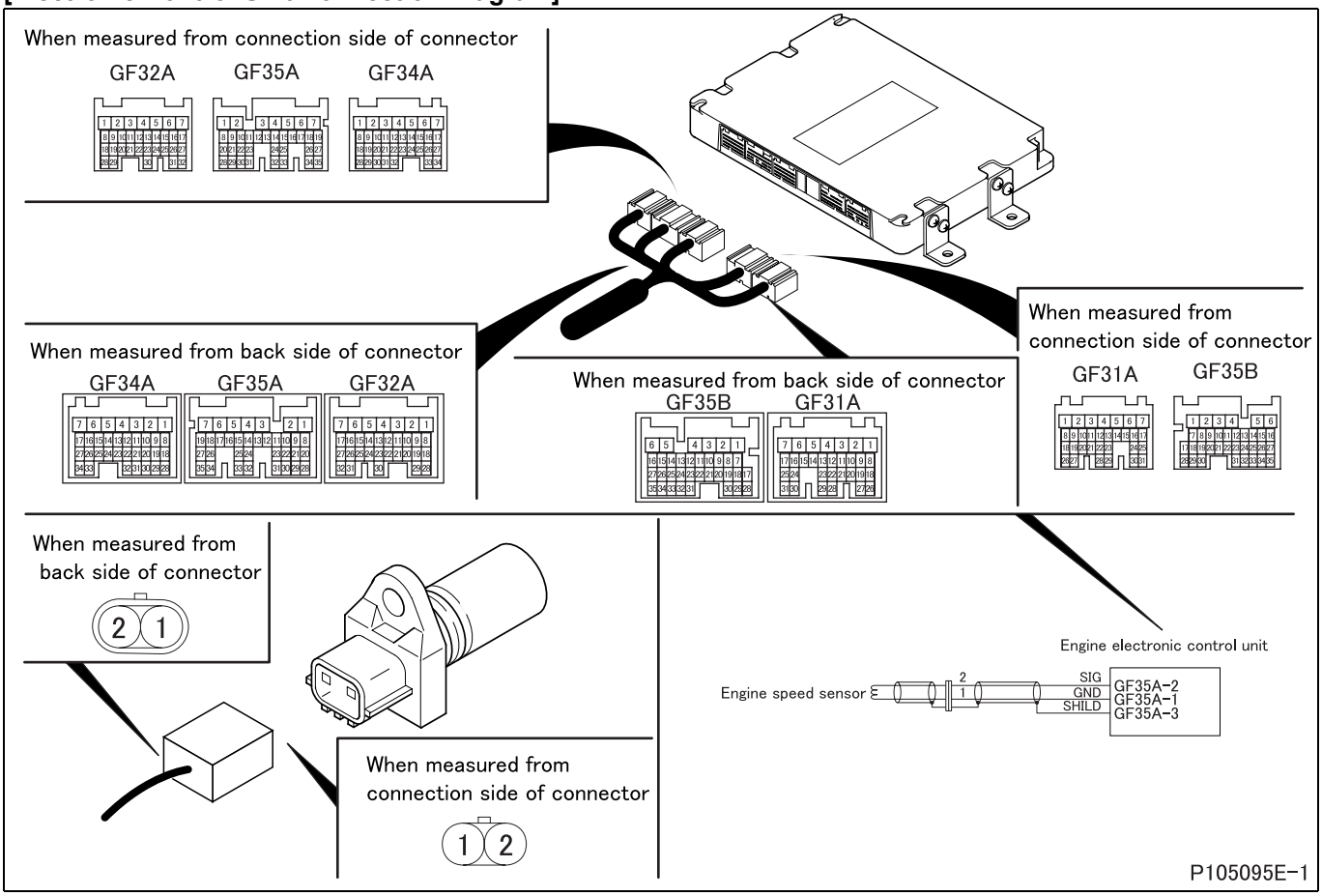

[Parts Identification and Location]

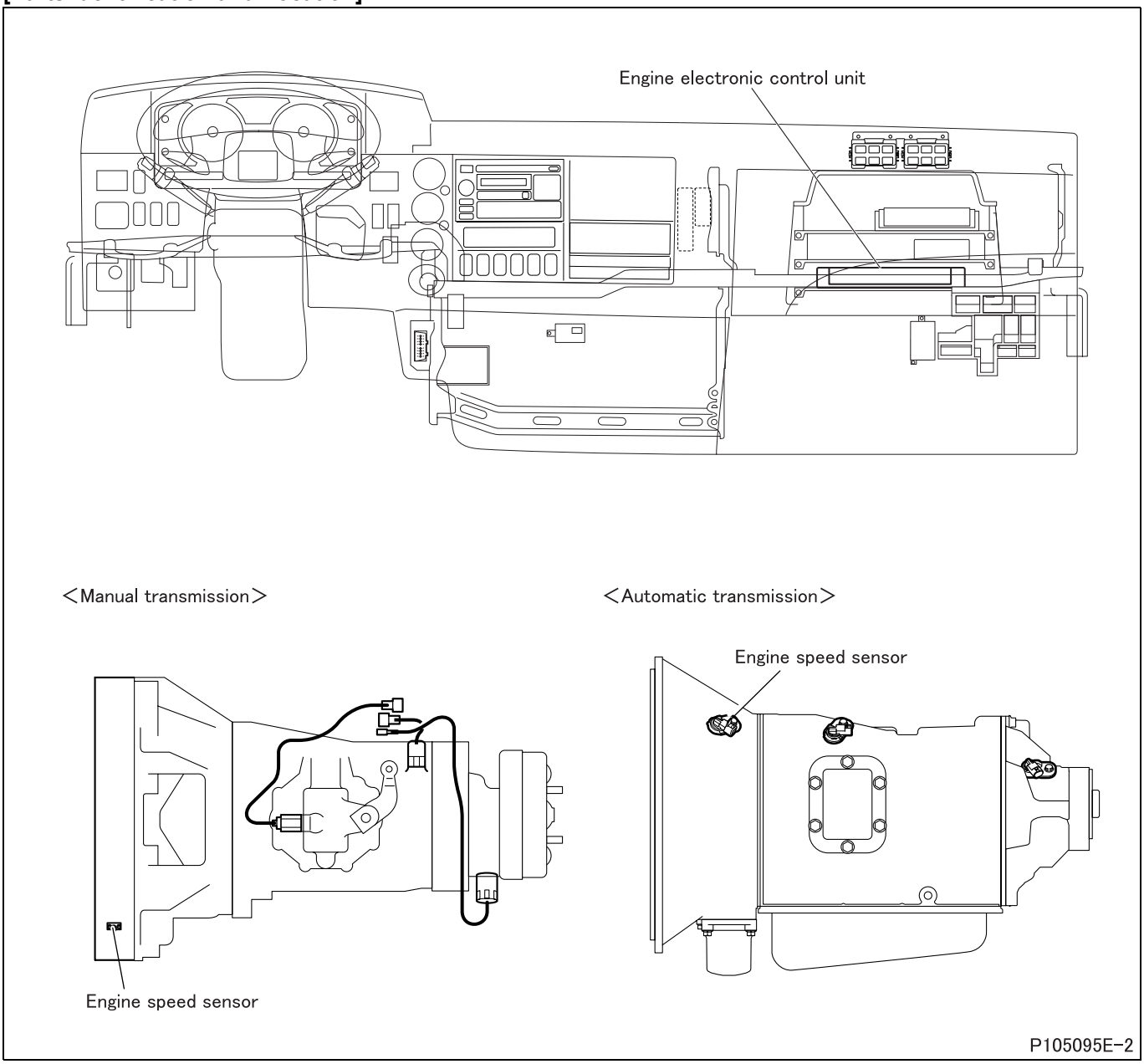

[Fault diagnosis]

- Perform checks in the sequence of the following steps.

Step 1	Inspection items		Inspection by control data
	Maintenance item		**<General Scanning Tool used>** • Measure item “Ne”. **<Multi-Use Tester used>** • Measure item No. 01 “Engine Revolution” of Service Data.
	Inspection condition		–
	Requirements		Same indication as tachometer is given.
	Inspection result (Is the judging standard satisfied?)	YES	Go to transient fault (See Gr00.).
		NO	Go to step 2.

Step 2	Inspection items		Inspection by electronic control unit connector
	Maintenance item		Measure value of resistance between connector (GF35A) terminal No. 1 and 2.
	Inspection condition		Disconnect electronic control unit from harness and measure from connection side of harness connector.
	Requirements		125.5 ± 17 Ω (20°C {68°F})
	Inspection result (Is the judging standard satisfied?)	YES	Go to step 3.
		NO	Go to step 4.

Step 3	Inspection items		Inspection of electronic control unit connector
	Maintenance item		Inspection of connector
	Inspection condition		–
	Requirements		• Connector is properly connected. • No trace of water entry is found. • No corrosion is found in terminal. • Connection to terminal is appropriate.
	Inspection result (Is the judging standard satisfied?)	YES	Go to step 8.
		NO	Modify connector.

Step 4	Inspection items		Inspection of engine speed sensor connector
	Maintenance item		Inspection of connector
	Inspection condition		–
	Requirements		• Connector is properly connected. • No trace of water entry is found. • No corrosion is found in terminal. • Connection to terminal is appropriate.
	Inspection result (Is the judging standard satisfied?)	YES	Go to step 5.
		NO	Modify connector.

Step 5	Inspection items		Inspection of engine speed sensor unit
	Maintenance item		Measure value of resistance between connector terminal No. 1 and 2.
	Inspection condition		–
	Requirements		125.5 ± 17 Ω (20°C {68°F})
	Inspection result (Is the judging standard satisfied?)	YES	Go to step 6.
		NO	Replacement of sensor

<Step 5 inspection diagram>

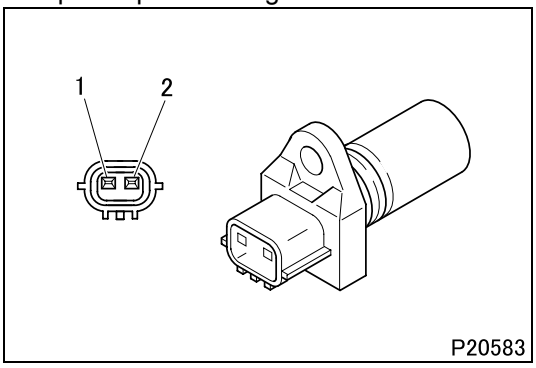

Step 6	Inspection items		Inspection of harness between electronic control unit and sensor (power supply)
	Maintenance item		Check circuit between sensor connector terminal No. 2 and electronic control unit connector (GF35A) terminal No. 2.
	Inspection condition		Disconnect each device from harness and measure from connection side of harness connector.
	Requirements		There is continuity.
	Inspection result (Is the judging standard satisfied?)	YES	Go to step 7.
		NO	Modify harness.

Step 7	Inspection items		Inspection of harness between electronic control unit and sensor (ground)
	Maintenance item		Check circuit between sensor connector terminal No. 1 and electronic control unit connector (GF35A) terminal No. 1.
	Inspection condition		Disconnect each device from harness and measure from connection side of harness connector.
	Requirements		There is continuity.
	Inspection result (Is the judging standard satisfied?)	YES	Go to step 8.
		NO	Modify harness.

Step 8	Inspection items		Inspection by control data
	Maintenance item		**<General Scanning Tool used>** • Measure item “Ne”. **<Multi-Use Tester used>** • Measure item No. 01 “Engine Revolution” of Service Data.
	Inspection condition		–
	Requirements		Same indication as tachometer is given.
	Inspection result (Is the judging standard satisfied?)	YES	Go to transient fault (See Gr00.).
		NO	Replacement of electronic control unit

[Fault code]
Diagnosis code: P0340/Flash code: 12
[Monitor]
Abnormality of cylinder recognition sensor
[Fault (outline)]
No pulse check
[Diagnosis check]
- Output pulses from cylinder recognition sensor during engine operation are counted.

[Code generation condition]
- No input pulse is received from cylinder recognition sensor with one revolution of engine.
  (Warning lamp is lit and diagnosis code is displayed on first establishment of code generation condition.)

[Diagnosis check timing]
- When code generation condition is established after starter switch ON

[Diagnostic requirement]
- Battery voltage: normal

[Control effected by electronic control unit during fault]
- Control is carried out using engine speed sensors (engine is stopped if engine speed sensor also malfunctions).
- Auto cruise control is stopped (normal running (engine is stopped if engine speed sensor also malfunctions), start-ability declines).
- Fault detection for controller area network communication is stopped.

[Probable cause of trouble]
- Open-circuit or short-circuit of harness between electronic control unit and cylinder recognition sensor
- Abnormality of each connector
- Abnormality of cylinder recognition sensor
- Abnormality in electronic control unit

[Recoverability]
<Control during fault>
- Recovered if signal becomes normal with starter switch in ON position.

<Warning lamp>
- Extinguished at 4th driving cycle after normal signal is input.

<Fault code>
- Automatically cleared at 40th warm up cycle after warning lamp is extinguished. (To clear as desired, erase from the memory.)

Driving cycle : “Starter switch ON to start engine till starter switch OFF” constitutes 1 driving cycle.
Warm up cycle : “Starter switch ON to start engine till starter switch OFF after coolant temperature increased and engine warmed up” constitutes 1 warm up cycle.

[Electronic Control Unit Connection Diagram]

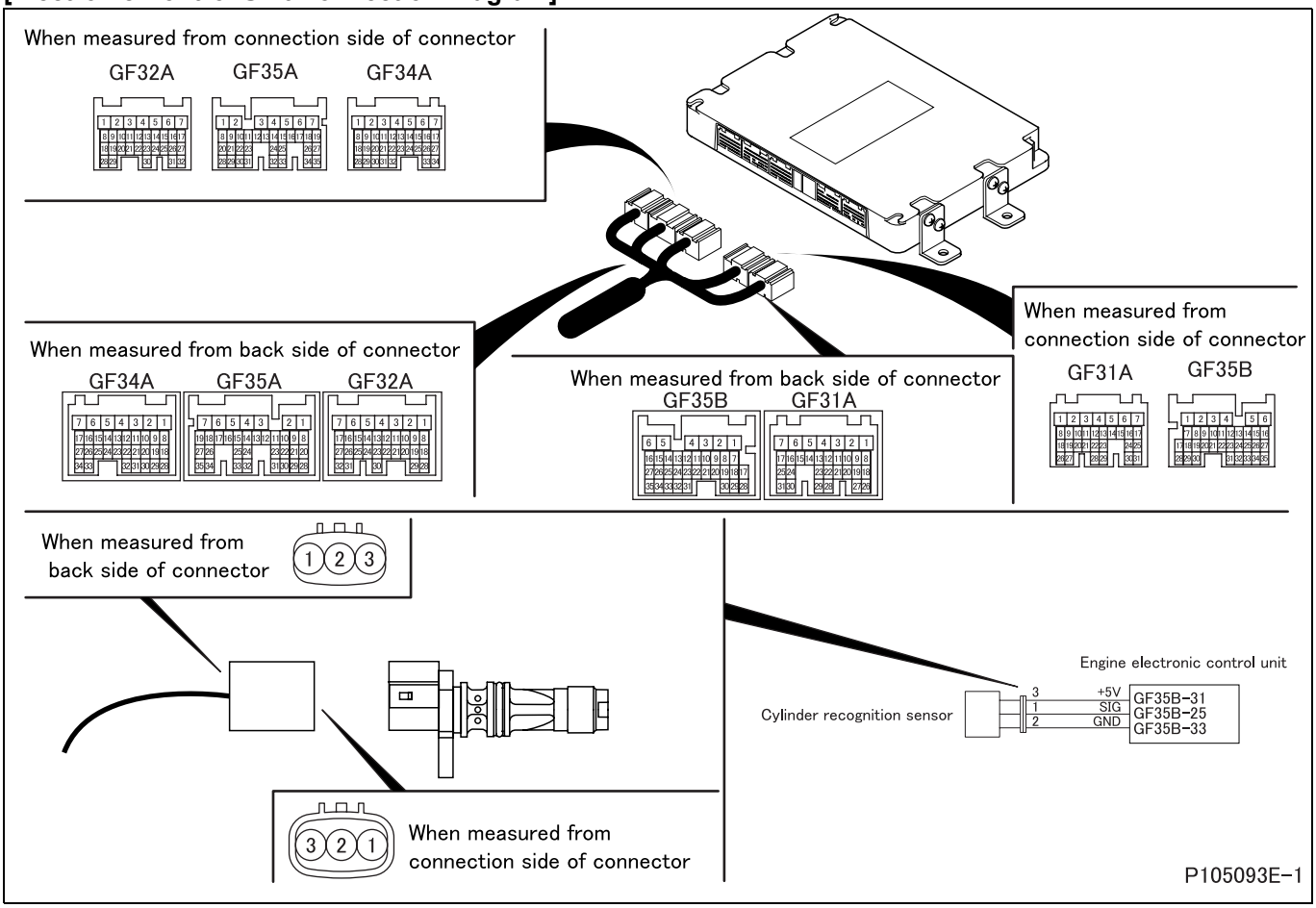

[Parts Identification and Location]

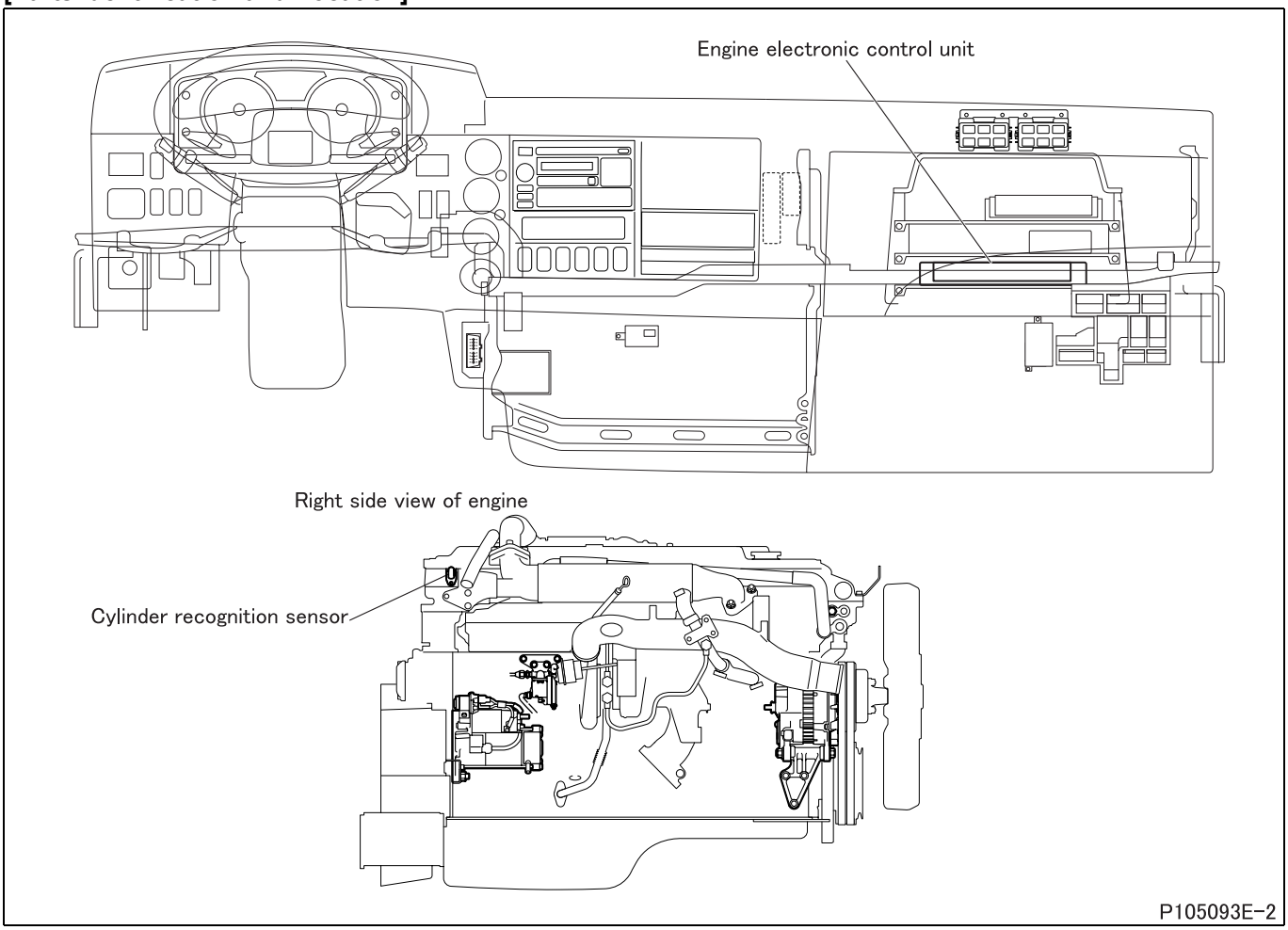

[Fault diagnosis]

- Perform checks in the sequence of the following steps.

Step 1	Inspection items		Inspection by control data
	Maintenance item		**<General Scanning Tool used>** • Measure item “Ne”. **<Multi-Use Tester used>** • Measure item No. 01 “Engine Revolution” of Service Data.
	Inspection condition		–
	Requirements		Same indication as tachometer is given.
	Inspection result (Is the judging standard satisfied?)	YES	Go to transient fault (See Gr00.).
		NO	Go to step 2.

Step 2	Inspection items		Inspection by electronic control unit connector (signal)
	Maintenance item		Measure value of voltage between connector (GF35B) terminal No. 25 (+) and 33 (–).
	Inspection condition		• Measure from back side of connector of harness with each device connected to harness. • Starter switch: ON
	Requirements		1 V or more
	Inspection result (Is the judging standard satisfied?)	YES	Go to step 5.
		NO	Go to step 3.

Step 3	Inspection items		Inspection by electronic control unit connector (power supply)
	Maintenance item		Measure value of voltage between connector (GF35B) terminal No. 31 (+) and 33 (–).
	Inspection condition		• Measure from back side of connector of harness with each device connected to harness. • Starter switch: ON
	Requirements		5 V
	Inspection result (Is the judging standard satisfied?)	YES	Go to step 4.
		NO	Go to step 5.

Step 4	Inspection items		Inspection by electronic control unit connector (ground)
	Maintenance item		Measure value of voltage between connector (GF35B) terminal No. 33 (+) and (GF31A) terminal No. 3 (–).
	Inspection condition		• Measure from back side of connector of harness with each device connected to harness. • Starter switch: ON
	Requirements		0 V
	Inspection result (Is the judging standard satisfied?)	YES	Go to step 6.
		NO	Go to step 5.

Step 5	Inspection items		Inspection of electronic control unit connector
	Maintenance item		Inspection of connector
	Inspection condition		–
	Requirements		• Connector is properly connected. • No trace of water entry is found. • No corrosion is found in terminal. • Connection to terminal is appropriate.
	Inspection result (Is the judging standard satisfied?)	YES	Go to step 12.
		NO	Modify connector.

Step 6	Inspection items		Inspection of sensor connector
	Maintenance item		Inspection of connector
	Inspection condition		–
	Requirements		• Connector is properly connected. • No trace of water entry is found. • No corrosion is found in terminal. • Connection to terminal is appropriate.
	Inspection result (Is the judging standard satisfied?)	YES	Go to step 7.
		NO	Modify connector.

Step 7	Inspection items		Inspection of sensor unit
	Maintenance item		Measure value of resistance between connector terminal No. 1 and 2.
	Inspection condition		–
	Requirements		200 to 1800 Ω
	Inspection result (Is the judging standard satisfied?)	YES	Go to step 8.
		NO	Replacement of sensor

<Step 7 inspection diagram>

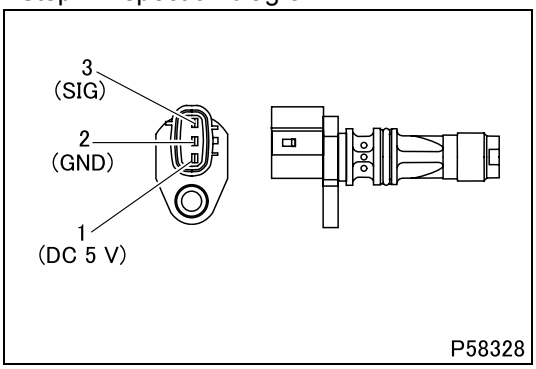

Step 8	Inspection items		Inspection of harness between electronic control unit and sensor (power supply)
	Maintenance item		Measure value of voltage between sensor connector terminal No. 3 (+) and 2 (–).
	Inspection condition		• Remove connector and measure from harness side. • Starter switch: ON
	Requirements		5 V
	Inspection result (Is the judging standard satisfied?)	YES	Go to step 10.
		NO	Go to step 9.

Step 9	Inspection items		Inspection of harness between electronic control unit and sensor (power supply)
	Maintenance item		Check circuit between sensor connector terminal No. 3 and electronic control unit connector (GF35B) terminal No. 31.
	Inspection condition		Disconnect each device from harness and measure from connection side of harness connector.
	Requirements		There is continuity.
	Inspection result (Is the judging standard satisfied?)	YES	Go to step 12.
		NO	Modify harness.

Step 10	Inspection items		Inspection of harness between electronic control unit and sensor (ground)
	Maintenance item		Check circuit between sensor connector terminal No. 2 and electronic control unit connector (GF35B) terminal No. 33.
	Inspection condition		Disconnect each device from harness and measure from connection side of harness connector.
	Requirements		There is continuity.
	Inspection result (Is the judging standard satisfied?)	YES	Go to step 11.
		NO	Modify harness.

Step 11	Inspection items		Inspection of harness between electronic control unit and sensor (signal)
	Maintenance item		Check circuit between sensor connector terminal No. 1 and electronic control unit connector (GF35B) terminal No. 25.
	Inspection condition		Disconnect each device from harness and measure from connection side of harness connector.
	Requirements		There is continuity.
	Inspection result (Is the judging standard satisfied?)	YES	Go to step 12.
		NO	Modify harness.

Step 12	Inspection items		Inspection by control data
	Maintenance item		**<General Scanning Tool used>** • Measure item “Ne”. **<Multi-Use Tester used>** • Measure item No. 01 “Engine Revolution” of Service Data.
	Inspection condition		–
	Requirements		Same indication as tachometer is given.
	Inspection result (Is the judging standard satisfied?)	YES	Go to transient fault (See Gr00.).
		NO	Replacement of electronic control unit

[Fault code]
Diagnosis code: P0344/Flash code: 64
[Monitor]
Abnormality of cylinder recognition sensor
[Fault (outline)]
Abnormal pulse count
[Diagnosis check]
- Output pulses from cylinder recognition sensor during engine operation are counted.

[Code generation condition]
- Number of pulses input from cylinder recognition sensor when engine makes a turn is not normal.
  (Warning lamp is lit and diagnosis code is displayed on first establishment of code generation condition.)

[Diagnosis check timing]
- When code generation condition is established after starter switch ON

[Diagnostic requirement]
- Battery voltage: normal
- Engine state: Not in stalled condition (inputs available from cylinder recognition sensor)
- Engine speed

[Control effected by electronic control unit during fault]
- Auto cruise control is stopped.

[Probable cause of trouble]
- Open-circuit or short-circuit of harness between electronic control unit and cylinder recognition sensor
- Abnormality of each connector
- Abnormality of cylinder recognition sensor
- Abnormality in electronic control unit

[Recoverability]
<Control during fault>
- Recovered if signal becomes normal with starter switch in ON position.

<Warning lamp>
- Extinguished at 4th driving cycle after normal signal is input.

<Fault code>
- Automatically cleared at 40th warm up cycle after warning lamp is extinguished. (To clear as desired, erase from the memory.)

Driving cycle : “Starter switch ON to start engine till starter switch OFF” constitutes 1 driving cycle.
Warm up cycle : “Starter switch ON to start engine till starter switch OFF after coolant temperature increased and engine warmed up” constitutes 1 warm up cycle.

[Electronic Control Unit Connection Diagram]

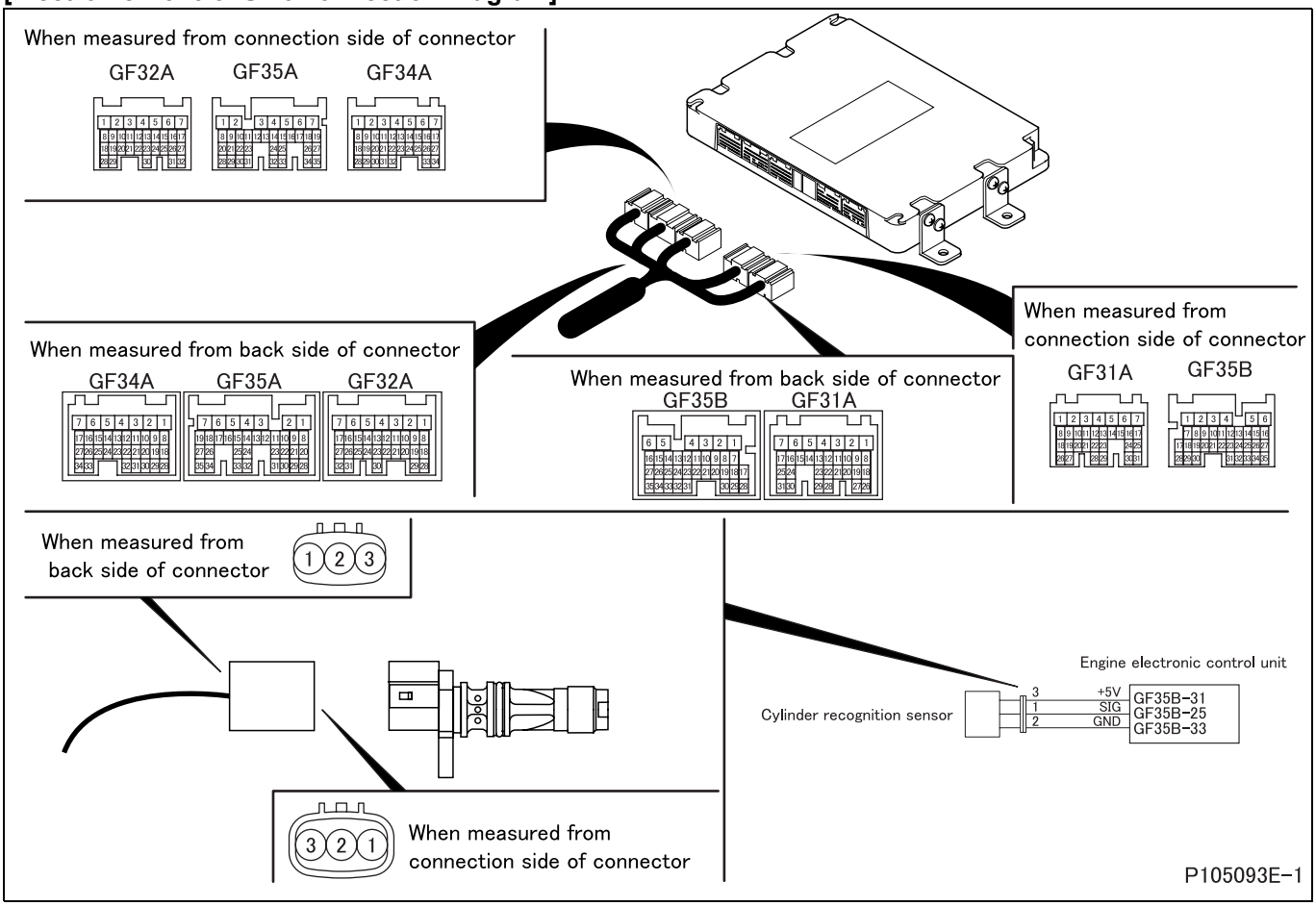

[Parts Identification and Location]

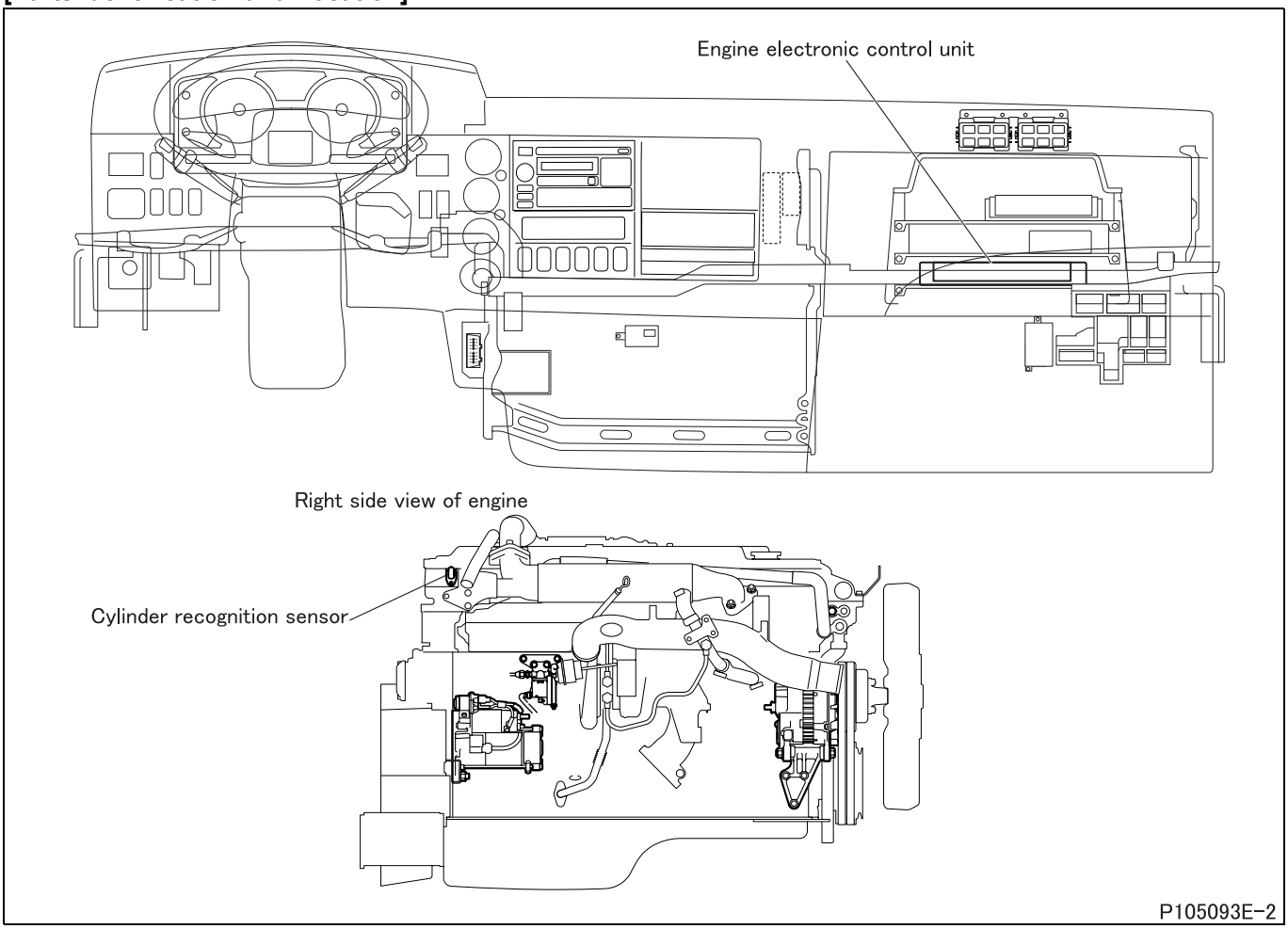

[Fault diagnosis]

- Perform checks in the sequence of the following steps

Step 1	Inspection items		Inspection by control data
	Maintenance item		**<General Scanning Tool used>** • Measure item “Ne”. **<Multi-Use Tester used>** • Measure item No. 01 “Engine Revolution” of Service Data.
	Inspection condition		–
	Requirements		Same indication as tachometer is given.
	Inspection result (Is the judging standard satisfied?)	YES	Go to transient fault (See Gr00.).
		NO	Go to step 2.

Step 2	Inspection items		Inspection by electronic control unit connector (signal)
	Maintenance item		Measure value of voltage between connector (GF35B) terminal No. 25 (+) and 33 (–).
	Inspection condition		• Measure from back side of connector of harness with each device connected to harness. • Starter switch: ON
	Requirements		1 V or more
	Inspection result (Is the judging standard satisfied?)	YES	Go to step 5.
		NO	Go to step 3.

Step 3	Inspection items		Inspection by electronic control unit connector (power supply)
	Maintenance item		Measure value of voltage between connector (GF35B) terminal No. 31 (+) and 33 (–).
	Inspection condition		• Measure from back side of connector of harness with each device connected to harness. • Starter switch: ON
	Requirements		5 V
	Inspection result (Is the judging standard satisfied?)	YES	Go to step 4.
		NO	Go to step 5.

Step 4	Inspection items		Inspection by electronic control unit connector (ground)
	Maintenance item		Measure value of voltage between connector (GF35B) terminal No. 33 (+) and (GF31A) terminal No. 3 (–).
	Inspection condition		• Measure from back side of connector of harness with each device connected to harness. • Starter switch: ON
	Requirements		0 V
	Inspection result (Is the judging standard satisfied?)	YES	Go to step 6.
		NO	Go to step 5.

Step 5	Inspection items		Inspection of electronic control unit connector
	Maintenance item		Inspection of connector
	Inspection condition		–
	Requirements		• Connector is properly connected. • No trace of water entry is found. • No corrosion is found in terminal. • Connection to terminal is appropriate.
	Inspection result (Is the judging standard satisfied?)	YES	Go to step 12.
		NO	Modify connector.

Step 6	Inspection items		Inspection of sensor connector
	Maintenance item		Inspection of connector
	Inspection condition		–
	Requirements		• Connector is properly connected. • No trace of water entry is found. • No corrosion is found in terminal. • Connection to terminal is appropriate.
	Inspection result (Is the judging standard satisfied?)	YES	Go to step 7.
		NO	Modify connector.

Step 7	Inspection items		Inspection of sensor unit
	Maintenance item		Measure value of resistance between connector terminal No. 1 and 2.
	Inspection condition		–
	Requirements		200 to 1800 Ω
	Inspection result (Is the judging standard satisfied?)	YES	Go to step 8.
		NO	Replacement of sensor

<Step 7 inspection diagram>

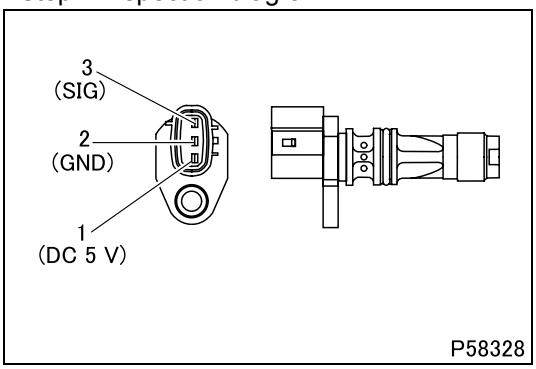

Step 8	Inspection items		Inspection of harness between electronic control unit and sensor (power supply)
	Maintenance item		Measure value of voltage between sensor connector terminal No. 3 (+) and 2 (–).
	Inspection condition		• Remove connector and measure from harness side. • Starter switch: ON
	Requirements		5 V
	Inspection result (Is the judging standard satisfied?)	YES	Go to step 10.
		NO	Go to step 9.

Step 9	Inspection items		Inspection of harness between electronic control unit and sensor (power supply)
	Maintenance item		Check circuit between sensor connector terminal No. 3 and electronic control unit connector (GF35B) terminal No. 31.
	Inspection condition		Disconnect each device from harness and measure from connection side of harness connector.
	Requirements		There is continuity.
	Inspection result (Is the judging standard satisfied?)	YES	Go to step 12.
		NO	Modify harness.

Step 10	Inspection items		Inspection of harness between electronic control unit and sensor (ground)
	Maintenance item		Check circuit between sensor connector terminal No. 2 and electronic control unit connector (GF35B) terminal No. 33.
	Inspection condition		Disconnect each device from harness and measure from connection side of harness connector.
	Requirements		There is continuity.
	Inspection result (Is the judging standard satisfied?)	YES	Go to step 11.
		NO	Modify harness.

Step 11	Inspection items		Inspection of harness between electronic control unit and sensor (signal)
	Maintenance item		Check circuit between sensor connector terminal No. 1 and electronic control unit connector (GF35B) terminal No. 25.
	Inspection condition		Disconnect each device from harness and measure from connection side of harness connector.
	Requirements		There is continuity.
	Inspection result (Is the judging standard satisfied?)	YES	Go to step 12.
		NO	Modify harness.

Step 12	Inspection items		Inspection by control data
	Maintenance item		**<General Scanning Tool used>** • Measure item “Ne”. **<Multi-Use Tester used>** • Measure item No. 01 “Engine Revolution” of Service Data.
	Inspection condition		–
	Requirements		Same indication as tachometer is given.
	Inspection result (Is the judging standard satisfied?)	YES	Go to transient fault (See Gr00.).
		NO	Replacement of electronic control unit

[Fault code]
Diagnosis code: P0383/Flash code: 26
[Monitor]
Abnormality of glow drive relay
[Fault (outline)]
Short circuit ground
[Diagnosis check]
- Glow drive relay circuit is monitored for fault.

[Code generation condition]
- Glow drive relay circuit remains shorted to ground or open as detected for approx. 1 second.
  (Warning lamp is lit and diagnosis code is displayed on first establishment of code generation condition.)

[Diagnosis check timing]
- When code generation condition is established after starter switch ON

[Diagnostic requirement]
- 2 seconds passed after starter switch ON
- 2 seconds passed after cranking
- Battery voltage: normal
- Glow drive relay: active

[Control effected by electronic control unit during fault]
- Glow drive relay is inactivated.

[Probable cause of trouble]
- Open-circuit or short-circuit of harness between electronic control unit and glow drive relay
- Abnormality of each connector
- Abnormality of glow drive relay
- Abnormality in electronic control unit

[Recoverability]
<Control during fault>
- Recovered if signal becomes normal with starter switch in ON position.

<Fault code>
- Automatically cleared at 40th warm up cycle after warning lamp is extinguished. (To clear as desired, erase from the memory.)

Warm up cycle : “Starter switch ON to start engine till starter switch OFF after coolant temperature increased and engine warmed up” constitutes 1 warm up cycle.

[Electronic Control Unit Connection Diagram]

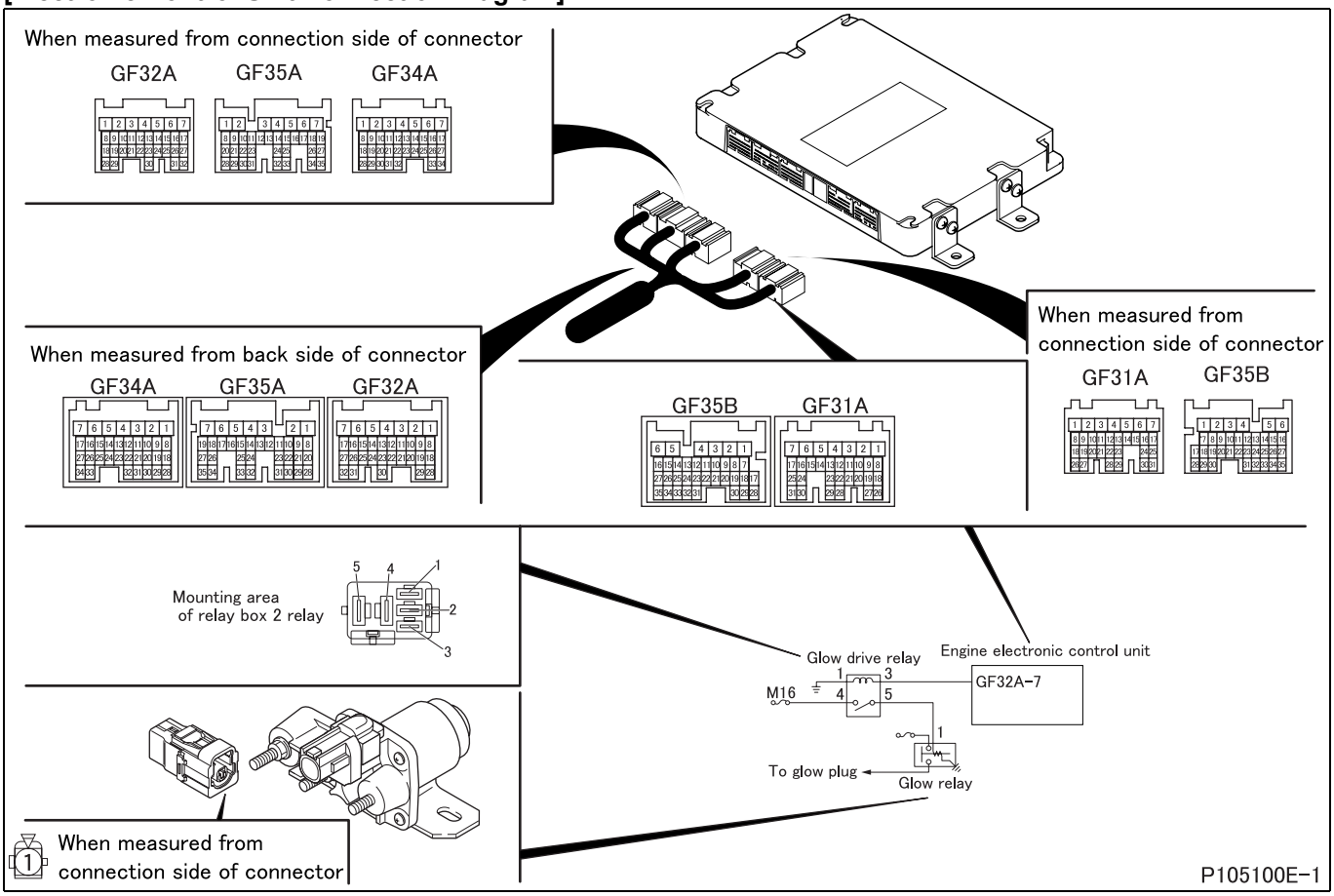

[Parts Identification and Location]

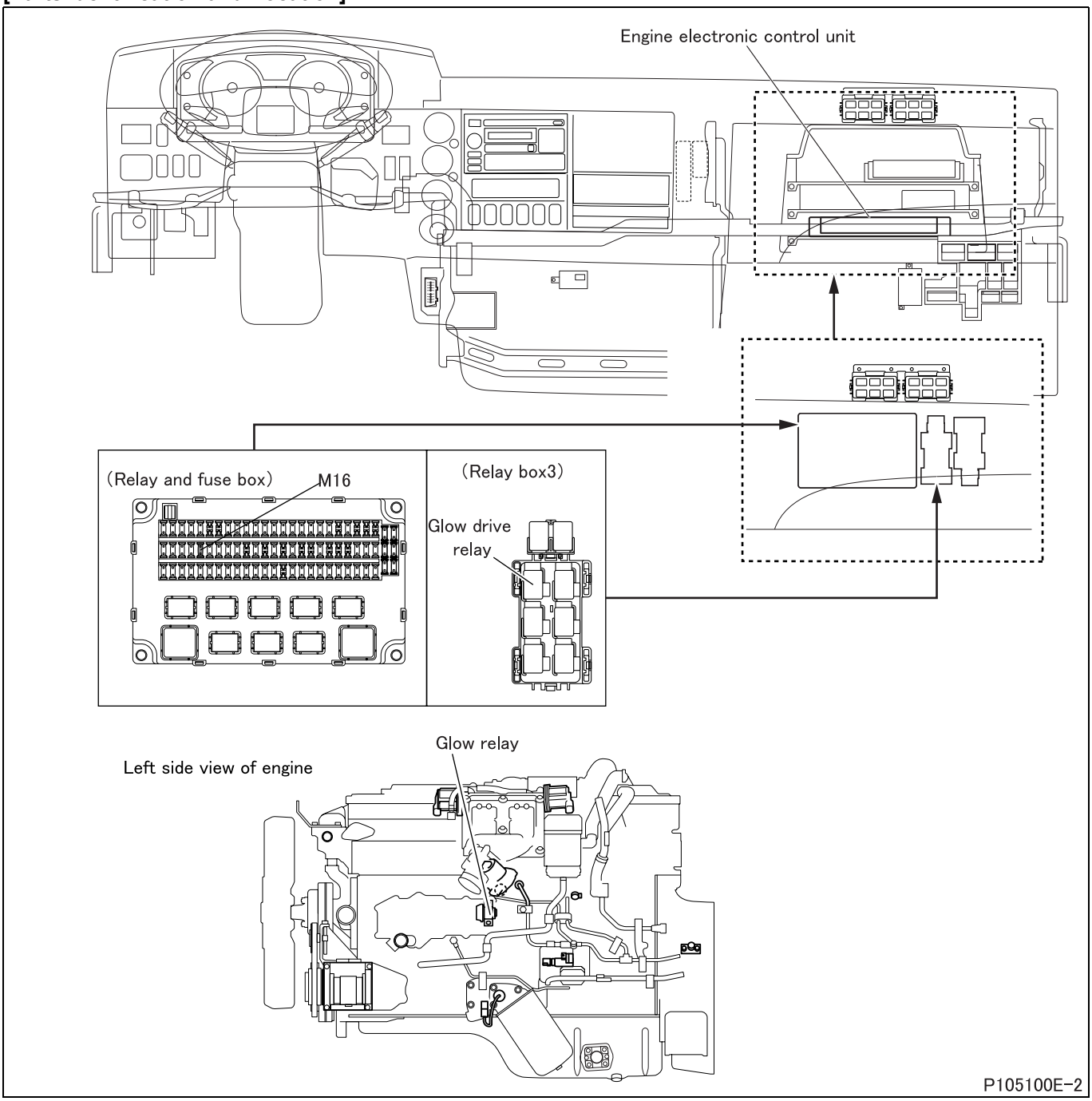

[Fault diagnosis]

- Perform checks in the sequence of the following steps.

Step 1	Inspection items		Inspection by control data
	Maintenance item		Perform actuator test item No. AF “Relay for Glow Relay”.
	Inspection condition		–
	Requirements		Relay operation sound is noted (automatically reset after 6 seconds), or ON/OFF switching of Service Data: item No. 8D “Glow Relay” is effected.
	Inspection result (Is the judging standard satisfied?)	YES	Go to transient fault (See Gr00.).
		NO	Go to step 2.

Step 2	Inspection items		Inspection of electronic control unit connector
	Maintenance item		Inspection of connector
	Inspection condition		–
	Requirements		• Connector is properly connected. • No trace of water entry is found. • No corrosion is found in terminal. • Connection to terminal is appropriate.
	Inspection result (Is the judging standard satisfied?)	YES	Go to step 3.
		NO	Modify connector.

Step 3	Inspection items		Inspection of relay connector
	Maintenance item		Inspection of connector
	Inspection condition		–
	Requirements		• Connector is properly connected. • No trace of water entry is found. • No corrosion is found in terminal. • Connection to terminal is appropriate.
	Inspection result (Is the judging standard satisfied?)	YES	Go to step 4.
		NO	Modify connector.

Step 4	Inspection items		Inspection of relay unit
	Maintenance item		Measure continuity between terminals No. 4 and 5 when relay operates.
	Inspection condition		Apply battery voltage across terminals No. 3 (+) and 1 (–).
	Requirements		There is continuity.
	Inspection result (Is the judging standard satisfied?)	YES	Go to step 5.
		NO	Replacement of relay

<Step 4 inspection diagram>

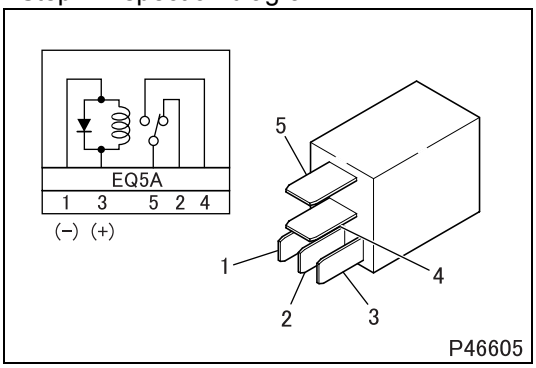

Step 5	Inspection items		Inspection of harness between relay and electronic control unit (power supply)
	Maintenance item		Check circuit between relay connector terminal No. 3 and electronic control unit connector (GF32A) terminal No. 7.
	Inspection condition		Disconnect electronic control unit from harness and measure from connection side of harness connector.
	Requirements		There is continuity.
	Inspection result (Is the judging standard satisfied?)	YES	Go to step 6.
		NO	Modify harness.

Step 6	Inspection items		Inspection of harness between relay and electronic control unit (ground)
	Maintenance item		Check circuit between relay connector terminal No. 1 and cab ground.
	Inspection condition		Disconnect electronic control unit from harness and measure from connection side of harness connector.
	Requirements		There is continuity.
	Inspection result (Is the judging standard satisfied?)	YES	Go to step 7.
		NO	Modify harness.

Step 7	Inspection items		Inspection by control data
	Maintenance item		Perform actuator test item No. AF “Relay for Glow Relay”.
	Inspection condition		–
	Requirements		Relay operation sound is noted (automatically reset after 6 seconds), or ON/OFF switching of Service Data: item No. 8D “Glow Relay” is effected.
	Inspection result (Is the judging standard satisfied?)	YES	Go to transient fault (See Gr00.).
		NO	Replacement of electronic control unit

[Fault code]
Diagnosis code: P0384/Flash code: 26
[Monitor]
Abnormality of glow drive relay
[Fault (outline)]
Short circuit battery
[Diagnosis check]
- Glow drive relay circuit is monitored for fault.

[Code generation condition]
- Glow drive relay circuit remains shorted to battery as detected for approx. 1 second.
  (Warning lamp is lit and diagnosis code is displayed on first establishment of code generation condition.)

[Diagnosis check timing]
- When code generation condition is established after starter switch ON

[Diagnostic requirement]
- 2 seconds passed after starter switch ON
- 2 seconds passed after cranking
- Battery voltage: normal
- Glow drive relay: inactive

[Control effected by electronic control unit during fault]
- Preheating control is stopped.
- Glow drive relay control is stopped.

[Probable cause of trouble]
- Open-circuit or short-circuit of harness between electronic control unit and glow drive relay
- Abnormality of each connector
- Abnormality of glow drive relay
- Abnormality in electronic control unit

[Recoverability]
<Control during fault>
- Recovered if signal becomes normal with starter switch in ON position.

<Fault code>
- Automatically cleared at 40th warm up cycle after warning lamp is extinguished. (To clear as desired, erase from the memory.)

Warm up cycle : “Starter switch ON to start engine till starter switch OFF after coolant temperature increased and engine warmed up” constitutes 1 warm up cycle.

[Electronic Control Unit Connection Diagram]

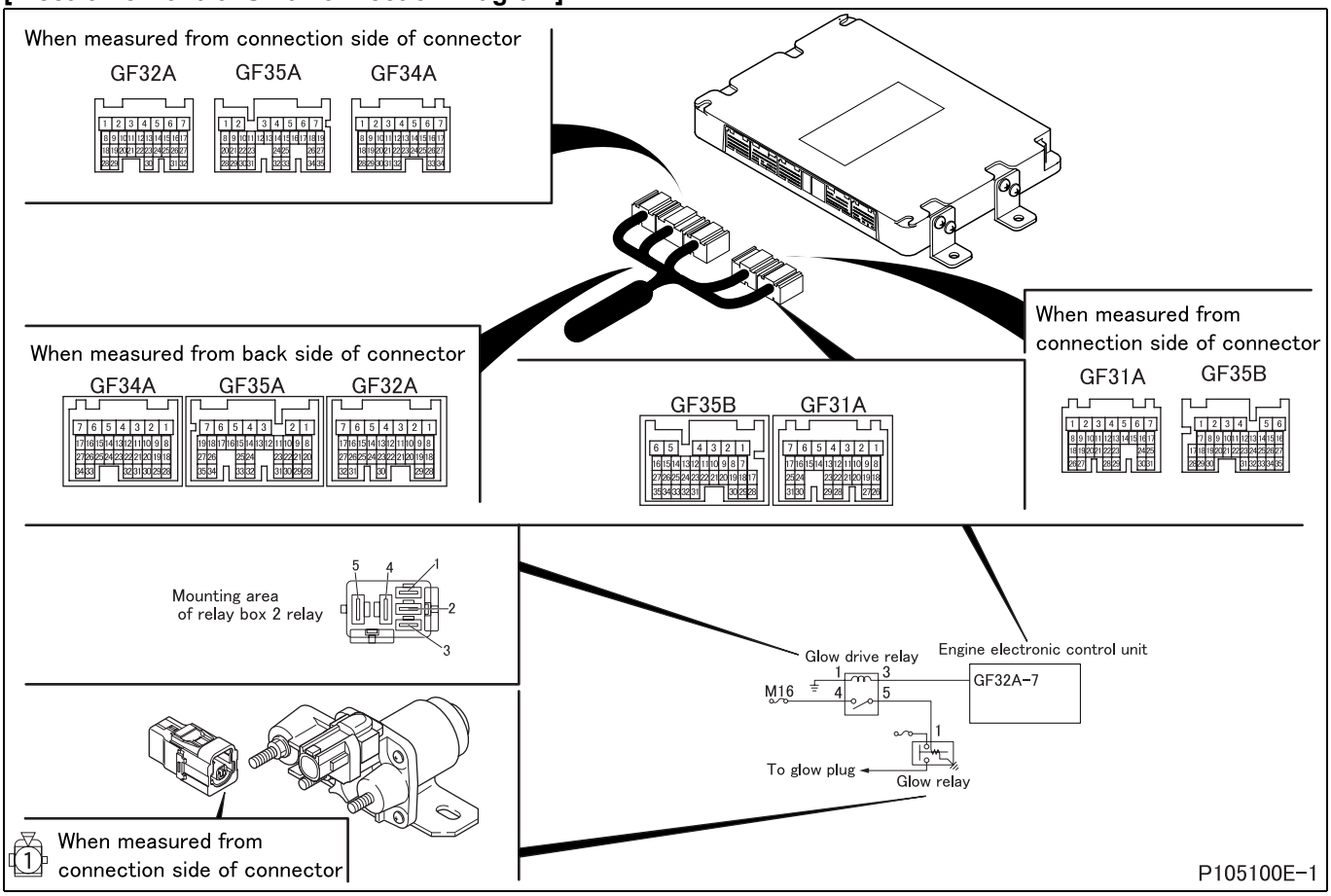

[Parts Identification and Location]

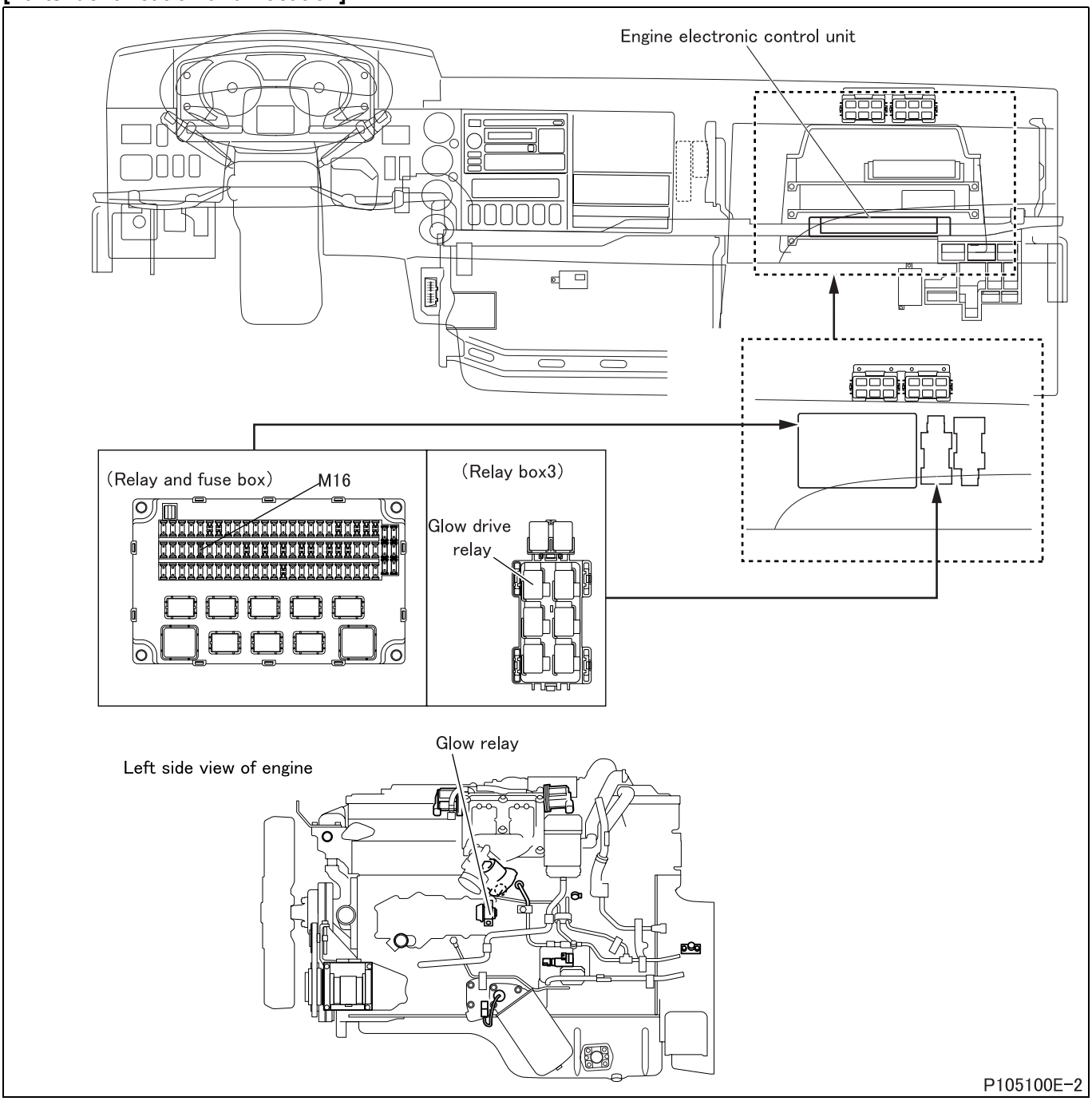

[Fault diagnosis]

- Perform checks in the sequence of the following steps.

Step 1	Inspection items		Inspection by control data
	Maintenance item		Perform actuator test item No. AF “Relay for Glow Relay”.
	Inspection condition		–
	Requirements		Relay operation sound is noted (automatically reset after 6 seconds), or ON/OFF switching of Service Data: item No. 8D “Glow Relay” is effected.
	Inspection result (Is the judging standard satisfied?)	YES	Go to transient fault (See Gr00.).
		NO	Go to step 2.

Step 2	Inspection items		Inspection of electronic control unit connector
	Maintenance item		Inspection of connector
	Inspection condition		–
	Requirements		• Connector is properly connected. • No trace of water entry is found. • No corrosion is found in terminal. • Connection to terminal is appropriate.
	Inspection result (Is the judging standard satisfied?)	YES	Go to step 3.
		NO	Modify connector.

Step 3	Inspection items		Inspection of relay connector
	Maintenance item		Inspection of connector
	Inspection condition		–
	Requirements		• Connector is properly connected. • No trace of water entry is found. • No corrosion is found in terminal. • Connection to terminal is appropriate.
	Inspection result (Is the judging standard satisfied?)	YES	Go to step 4.
		NO	Modify connector.

Step 4	Inspection items		Inspection of relay unit
	Maintenance item		Measure continuity between terminals No. 4 and 5 when relay operates.
	Inspection condition		Apply battery voltage across terminals No. 3 (+) and 1 (–).
	Requirements		There is continuity.
	Inspection result (Is the judging standard satisfied?)	YES	Go to step 5.
		NO	Replacement of relay

<Step 4 inspection diagram>

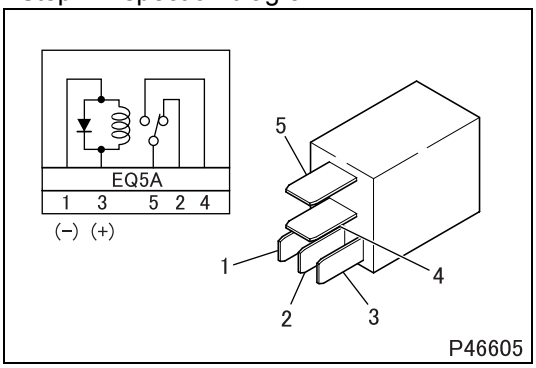

Step 5	Inspection items		Inspection of harness between relay and electronic control unit (power supply)
	Maintenance item		Check circuit between relay connector terminal No. 3 and electronic control unit connector (GF32A) terminal No. 7.
	Inspection condition		Disconnect electronic control unit from harness and measure from connection side of harness connector.
	Requirements		There is continuity.
	Inspection result (Is the judging standard satisfied?)	YES	Go to step 6.
		NO	Modify harness.

Step 6	Inspection items		Inspection of harness between relay and electronic control unit (ground)
	Maintenance item		Check circuit between relay connector terminal No. 1 and cab ground.
	Inspection condition		Disconnect electronic control unit from harness and measure from connection side of harness connector.
	Requirements		There is continuity.
	Inspection result (Is the judging standard satisfied?)	YES	Go to step 7.
		NO	Modify harness.

Step 7	Inspection items		Inspection by control data
	Maintenance item		Perform actuator test item No. AF “Relay for Glow Relay”.
	Inspection condition		–
	Requirements		Relay operation sound is noted (automatically reset after 6 seconds), or ON/OFF switching of Service Data: item No. 8D “Glow Relay” is effected.
	Inspection result (Is the judging standard satisfied?)	YES	Go to transient fault (See Gr00.).
		NO	Replacement of electronic control unit

[Fault code]
Diagnosis code: P0401/Flash code: 02
[Monitor]
Exhaust gas recirculation system (insufficient flow rate of exhaust gas recirculation gas)
[Fault (outline)]
Insufficient exhaust gas recirculation flow
[Diagnosis check]
Either of the following is monitored. (Warning lamp is lit and diagnosis code is displayed on second establishment of code generation condition.)
<Condition (1)>
- Excess air rate (λ) is calculated to determine whether exhaust gas recirculation gas flow rate is correct or not.

<Condition (2)>
- Insufficient flow rate of exhaust gas recirculation gas is calculated based on inputs from air flow, boost pressure and engine speed sensors.

[Code generation condition]
Either of the following is judged.
<Condition (1)>
- Difference between target λ value and computed λ value remains less than specified for 30 seconds.

<Condition (2)>
- Computed exhaust gas recirculation flow rate remains below specified value for 30 seconds.

[Diagnosis check timing]
- When code generation condition is established after starter switch ON

[Diagnostic requirement]
<Condition (1)>
- Exhaust gas recirculation control status: closed loop
- Engine control map: normal
- Exhaust gas recirculation electronic drive unit: normal in output signal
- Air flow sensor: normal in output signal
- Boost pressure sensor: normal in output signal
- Check of boost temperature sensor: normal
- Atmospheric pressure sensor: normal in output signal
- Intake air temperature sensor 2: normal in output signal
- Intake air temperature sensor 1: normal in output signal
- Check of exhaust gas recirculation temperature: normal
- When prerequisites for exhaust gas recirculation control are all satisfied

<Condition (2)>
- Atmospheric temperature sensor: more than –30°C {–22°F} to 50°C {122°F}
- Atmospheric pressure: more than 85 kPa {12 psi, 0.9 kgf/cm^2} (at 1500 m {5000 ft})
- Water temperature: more than 70°C {158°F}
- Diesel particulate filter regeneration control: not effected
- Exhaust shutter: not controlled
- Exhaust gas recirculation electronic drive unit: normal
- Air flow sensor: normal in output signal
- Boost pressure sensor: normal in output signal
- Check of boost temperature sensor: normal
- Atmospheric pressure sensor: normal in output signal
- Intake air temperature sensor 2: normal in output signal
- Intake air temperature sensor 1: normal in output signal
- Check of exhaust gas recirculation temperature: normal
- When prerequisites for exhaust gas recirculation control are all satisfied

[Control effected by electronic control unit during fault]
- Effects no special control.

[Probable cause of trouble]

- Exhaust gas recirculation valve stuck (remains fully closed)
- Clogging of exhaust gas recirculation pipe and hose
- Exhaust gas recirculation cooler clogged

[Recoverability]

<Control during fault>

- Recovered if signal becomes normal with starter switch in ON position.

<Warning lamp>

- Extinguished at 4th driving cycle after normal signal is input.

<Fault code>

- Automatically cleared at 40th warm up cycle after warning lamp is extinguished. (To clear as desired, erase from the memory.)

Driving cycle : “Starter switch ON to start engine till starter switch OFF” constitutes 1 driving cycle.
Warm up cycle : “Starter switch ON to start engine till starter switch OFF after coolant temperature increased and engine warmed up” constitutes 1 warm up cycle.

[Electronic Control Unit Connection Diagram]

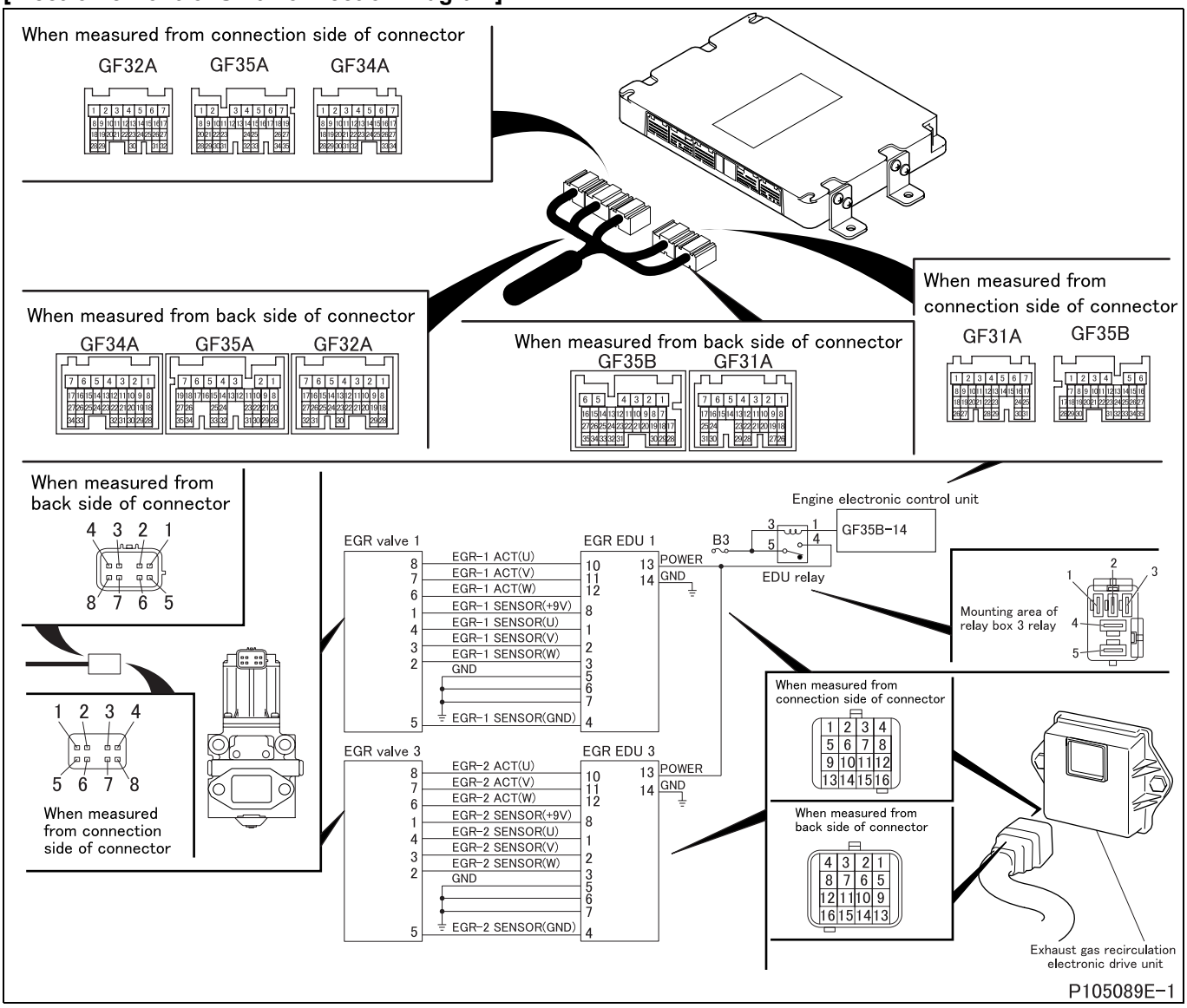

[Parts Identification and Location]

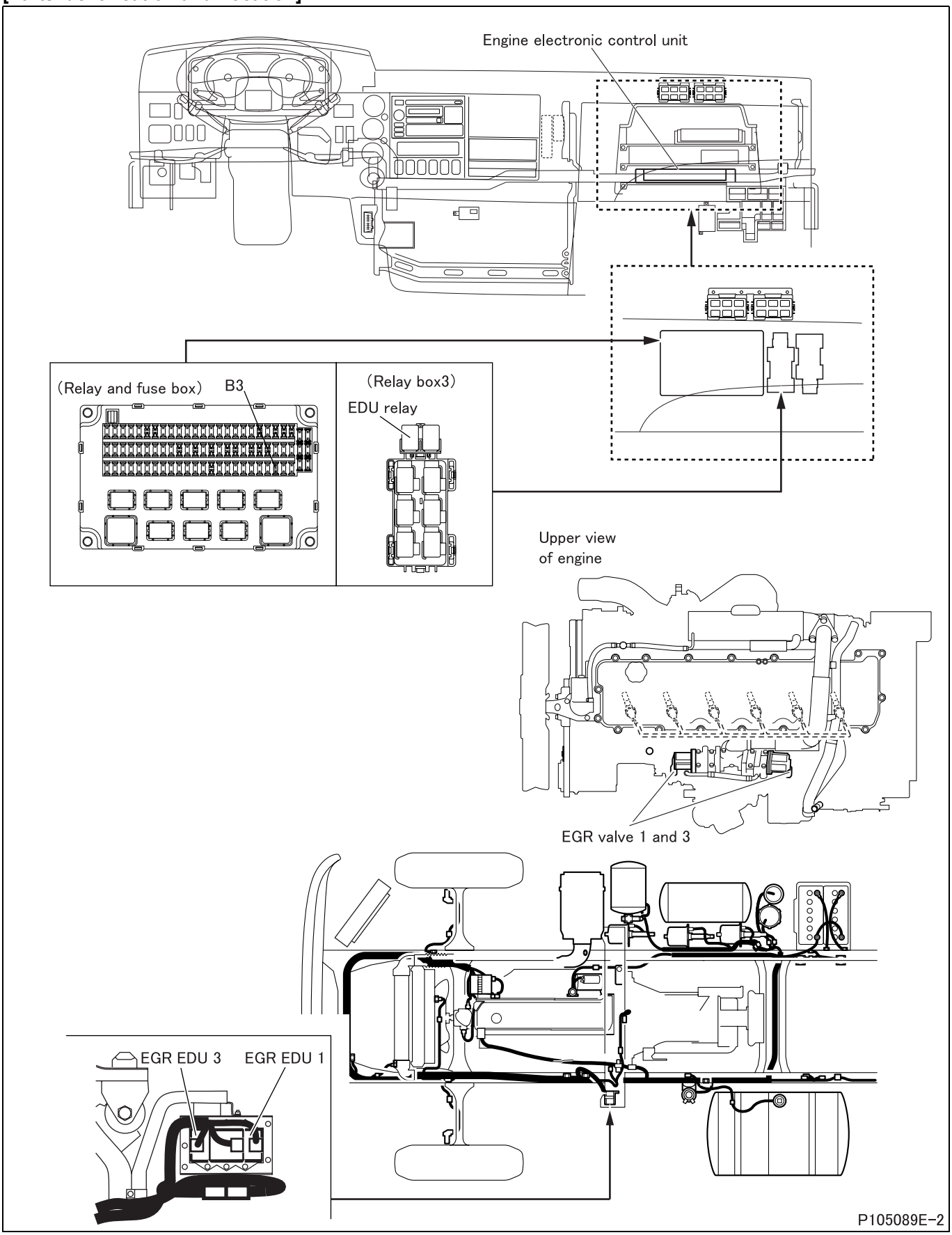

[Fault diagnosis]

- Perform checks in the sequence of the following step.

Step 1	Inspection items		Inspection by control data
	Maintenance item		Check if following diagnosis codes occur simultaneously. • P0402 “EGR Flow (Excessive)” • P0403 “EGR1 (Actuator Circuit)” • P0404 “EGR System” • P0409 “EGR1 (Position Sensor)” • P0562 “Power Supply Voltage (Low)” • P0563 “Power Supply Voltage (High)” • P0600 “CAN Communication” • P0604 “ECU Hardware (RAM)” • P0605 “ECU System (Hardware)” • P0606 “ECU Hardware (Main CPU)” • P0607 “ECU System” • P062F “ECU System (EEPROM)” • P0685 “EDU Relay (Open)” • P0686 “EDU Relay (Low)” • P0687 “EDU Relay (High)” • P0688 “EDU Relay (Over Load)”
	Inspection condition		• Starter switch: ON • Do not start engine.
	Requirements		Codes occur.
	Inspection result (Is the judging standard satisfied?)	YES	Inspect diagnosis code that is occurring.
		NO	Inspection of exhaust gas recirculation system (exhaust gas recirculation pipe, exhaust gas recirculation cooler, exhaust gas recirculation valve)

[Fault code]
Diagnosis code: P0402/Flash code: 02
[Monitor]
Exhaust gas recirculation system (excessive flow rate of exhaust gas recirculation gas)
[Fault (outline)]
Excessive exhaust gas recirculation flow
[Diagnosis check]
Either of the following is monitored.
<Condition (1)>
• Excess air rate (λ) is calculated to determine whether exhaust gas recirculation gas flow rate is correct or not.
<Condition (2)>
• Excessive flow rate of exhaust gas recirculation gas is calculated based on inputs from air flow, boost pressure and engine speed sensors.
[Code generation condition]
Either of the following is judged. (Warning lamp is lit and diagnosis code is displayed on second establishment of code generation condition.)
<Condition (1)>
• Difference between target λ value and computed λ value remains more than specified for 30 seconds.
<Condition (2)>
• Computed exhaust gas recirculation flow rate remains more than specified value for 30 seconds.
[Diagnosis check timing]
• When code generation condition is established after starter switch ON
[Diagnostic requirement]
<Condition (1)>
• Exhaust gas recirculation control status: closed loop
• Engine control map: normal
• Exhaust gas recirculation electronic drive unit: normal in output signal
• Air flow sensor: normal in output signal
• Boost pressure sensor: normal in output signal
• Check of boost temperature sensor: normal
• Atmospheric pressure sensor: normal in output signal
• Intake air temperature sensor 2: normal in output signal
• Intake air temperature sensor 1: normal in output signal
• Check of exhaust gas recirculation temperature: normal
• When prerequisites for exhaust gas recirculation control are all satisfied
<Condition (2)>
• Atmospheric temperature sensor: more than –30°C {–22°F} to 50°C {122°F}
• Atmospheric pressure: more than 85 kPa {12 psi, 0.9 kgf/cm^2} (at 1500 m {5000 ft})
• Water temperature: more than 70°C {158°F}
• Diesel particulate filter regeneration control: not effected
• Exhaust shutter: not controlled
• Exhaust gas recirculation electronic drive unit: normal
• Air flow sensor: normal in output signal
• Boost pressure sensor: normal in output signal
• Check of boost temperature sensor: normal
• Atmospheric pressure sensor: normal in output signal
• Intake air temperature sensor 2: normal in output signal
• Intake air temperature sensor 1: normal in output signal
• Check of exhaust gas recirculation temperature: normal
• When prerequisites for exhaust gas recirculation control are all satisfied
[Control effected by electronic control unit during fault]
• Effects no special control.

[Probable cause of trouble]

- Exhaust gas recirculation valve stuck (remains fully open)
- Damage of exhaust gas recirculation pipe and hose
- Damage of exhaust gas recirculation cooler

[Recoverability]

<Control during fault>

- Recovered if signal becomes normal with starter switch in ON position.

<Warning lamp>

- Extinguished at 4th driving cycle after normal signal is input.

<Fault code>

- Automatically cleared at 40th warm up cycle after warning lamp is extinguished. (To clear as desired, erase from the memory.)

Driving cycle : “Starter switch ON to start engine till starter switch OFF” constitutes 1 driving cycle.
Warm up cycle : “Starter switch ON to start engine till starter switch OFF after coolant temperature increased and engine warmed up” constitutes 1 warm up cycle.

[Electronic Control Unit Connection Diagram]

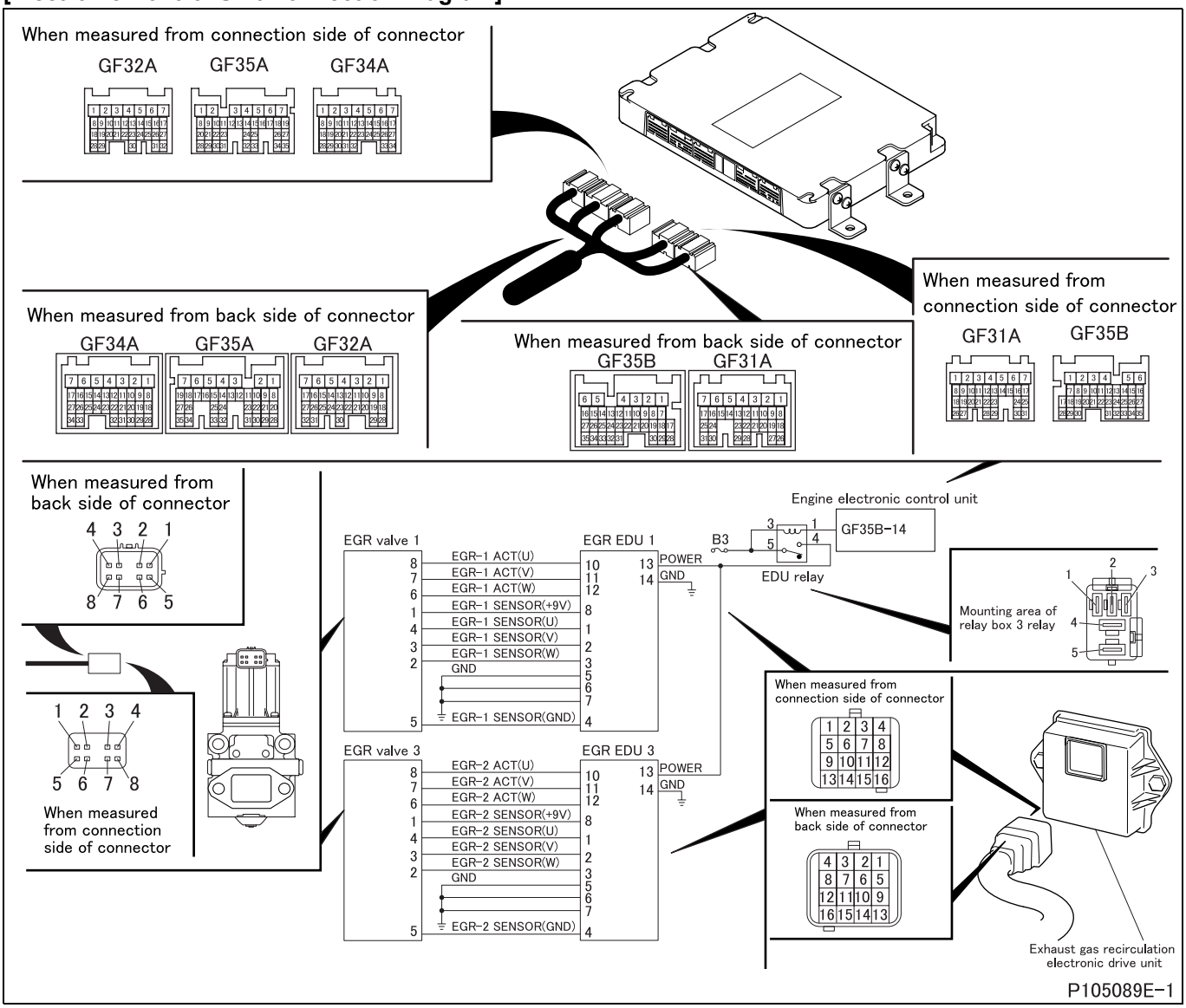

[Parts Identification and Location]

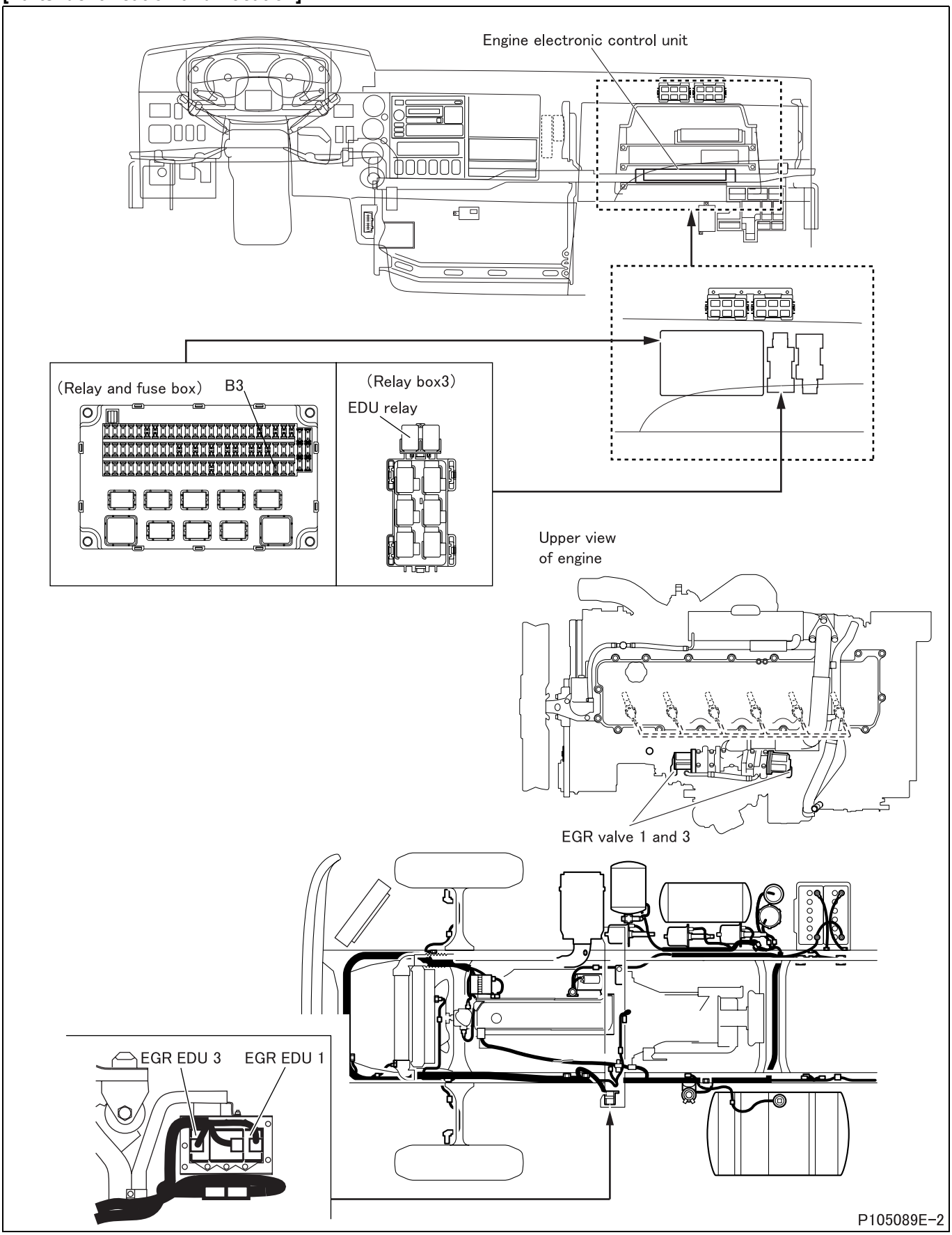

[Fault diagnosis]

- Perform checks in the sequence of the following step.

Step 1	Inspection items		Inspection by control data
	Maintenance item		Check if following diagnosis codes occur simultaneously. • P0402 “EGR Flow (Excessive)” • P0403 “EGR1 (Actuator Circuit)” • P0404 “EGR System” • P0409 “EGR1 (Position Sensor)” • P0562 “Power Supply Voltage (Low)” • P0563 “Power Supply Voltage (High)” • P0600 “CAN Communication” • P0604 “ECU Hardware (RAM)” • P0605 “ECU System (Hardware)” • P0606 “ECU Hardware (Main CPU)” • P0607 “ECU System” • P062F “ECU System (EEPROM)” • P0685 “EDU Relay (Open)” • P0686 “EDU Relay (Low)” • P0687 “EDU Relay (High)” • P0688 “EDU Relay (Over Load)”
	Inspection condition		• Starter switch: ON • Do not start engine.
	Requirements		Codes occur.
	Inspection result (Is the judging standard satisfied?)	YES	Inspect diagnosis code that is occurring.
		NO	Inspection of exhaust gas recirculation system (exhaust gas recirculation pipe, exhaust gas recirculation cooler, exhaust gas recirculation valve)

[Fault code]
Diagnosis code: P0403/Flash code: 67
[Monitor]
Abnormality in exhaust gas recirculation valve (actuator)
[Fault (outline)]
- Actuator short circuit
- Actuator open circuit
- Power supply too high
- Power supply too low

[Diagnosis check]
- Exhaust gas recirculation electronic drive unit monitors exhaust gas recirculation valve driving motor and sends fault information to engine electronic control unit through controller area network communication.

[Code generation condition]
Diagnosis code is generated under either of the following conditions. (Warning lamp is lit and diagnosis code is displayed on first establishment of code generation condition.)
- Motor circuit remains shorted or open as detected by exhaust gas recirculation electronic drive unit 1 or 3 for 1 second.
- Voltage of exhaust gas recirculation electronic drive unit 1 or 3 remains over 19 V for 5 seconds.
- Voltage of exhaust gas recirculation electronic drive unit 1 or 3 remains below 7 V for 13 seconds.
- From electronic drive unit is sent abnormal information the total reception time of which (through controller area network 2) exceeds 6 seconds.

[Diagnosis check timing]
- When code generation condition is established after starter switch ON

[Diagnostic requirement]
- 2 seconds passed after starter switch ON
- 2 seconds passed after cranking
- Battery voltage: normal

[Control effected by electronic control unit during fault]
- Injection quantity is limited.
- Exhaust gas recirculation control is stopped.
- Throttle control is stopped.
- Diesel particulate filter regeneration (manual or automatic) is stopped.

[Probable cause of trouble]
- Open-circuit or short-circuit of harness between exhaust gas recirculation electronic drive unit and exhaust gas recirculation valve
- Abnormality of each connector
- Abnormality of exhaust gas recirculation motor (built in exhaust gas recirculation valve)
- Abnormality of exhaust gas recirculation position sensor (built in exhaust gas recirculation valve)
- Abnormality of exhaust gas recirculation electronic drive unit
- Abnormality of electronic drive unit relay

[Recoverability]
<Control during fault>
- Recovered if signal becomes normal when starter switch is turned OFF to ON.

<Warning lamp>
- Extinguished at 4th driving cycle after normal signal is input.

<Fault code>
- Automatically cleared at 40th warm up cycle after warning lamp is extinguished. (To clear as desired, erase from the memory.)

Driving cycle : “Starter switch ON to start engine till starter switch OFF” constitutes 1 driving cycle.
Warm up cycle : “Starter switch ON to start engine till starter switch OFF after coolant temperature increased and engine warmed up” constitutes 1 warm up cycle.

[Electronic Control Unit Connection Diagram]

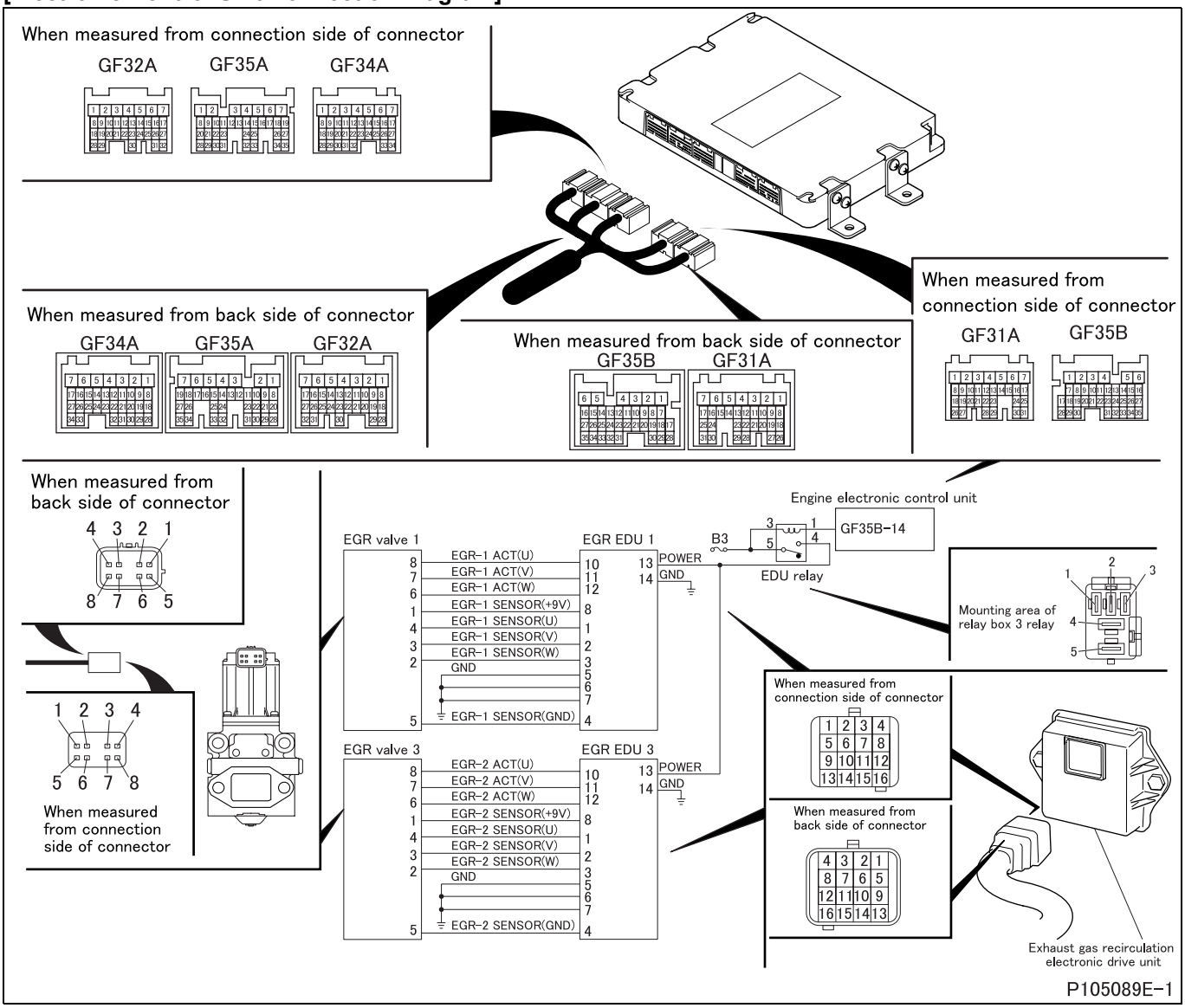

[Parts Identification and Location]

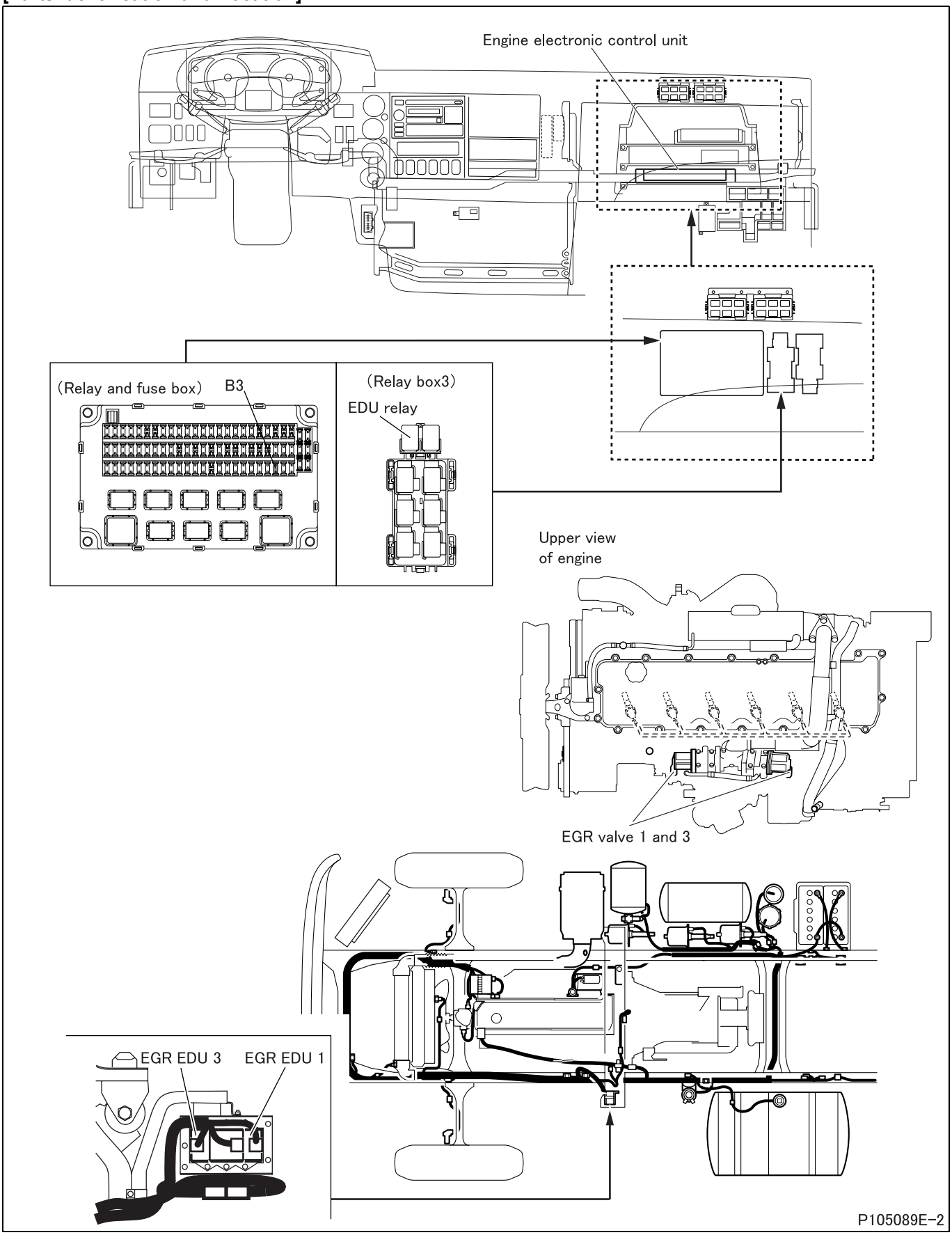

[Fault diagnosis]

- Perform checks in the sequence of the following steps.

Step 1	Inspection items		Inspection by control data
	Maintenance item		Perform actuator test item No. A1 “EGR1, 3”. **NOTE** • **As initial operational check of exhaust gas recirculation valve is automatically effected immediately after starter switch is ON, perform actuator test by Multi-Use Tester after that check (approximately 5 seconds later).**
	Inspection condition		• Vehicle: stationary (vehicle speed 0 km/h {0 MPH}) • Starter switch: ON (engine started) • Transmission: neutral (parking satisfactory for automatic transmission)
	Requirements		Actual position matches with target value set by Multi-Use Tester (check with service data “0E: EGR1 Actual Position” and “0F: EGR3 Actual Position”).
	Inspection result (Is the judging standard satisfied?)	YES	Go to transient fault (See Gr00.).
		NO	Go to step 2.

Step 2	Inspection items		Inspection of electronic drive unit connector
	Maintenance item		Inspection of connector
	Inspection condition		–
	Requirements		• Connector is properly connected. • No trace of water entry is found. • No corrosion is found in terminal. • Connection to terminal is appropriate.
	Inspection result (Is the judging standard satisfied?)	YES	Go to step 3.
		NO	Modify connector.

Step 3	Inspection items		Inspection of exhaust gas recirculation valve connector
	Maintenance item		Inspection of connector
	Inspection condition		–
	Requirements		• Connector is properly connected. • No trace of water entry is found. • No corrosion is found in terminal. • Connection to terminal is appropriate.
	Inspection result (Is the judging standard satisfied?)	YES	Go to step 4.
		NO	Modify connector.

Step 4	Inspection items		Inspection by control data
	Maintenance item		Check if following diagnosis codes occur simultaneously. • P0685 “EDU Relay (Open)” • P0686 “EDU Relay (Low)” • P0687 “EDU Relay (High)” • P0688 “EDU Relay (Over Load)”
	Inspection condition		Starter switch: ON
	Requirements		No codes occur.
	Inspection result (Is the judging standard satisfied?)	YES	Go to step 5.
		NO	Inspect diagnosis code that is occurring.

Step 5	Inspection items		Inspection of electronic drive unit connector (power supply)
	Maintenance item		Measure value of voltage between connector terminal No. 13 (+) and 14 (–).
	Inspection condition		• Remove connector and measure from harness side. • Starter switch: ON • Perform actuator test item No. A9 “EDU Relay”
	Requirements		Same as battery voltage.
	Inspection result (Is the judging standard satisfied?)	YES	Go to step 10.
		NO	Go to step 6.

Step 6	Inspection items		Inspection of relay connector
	Maintenance item		Inspection of connector
	Inspection condition		–
	Requirements		• Connector is properly connected. • No trace of water entry is found. • No corrosion is found in terminal. • Connection to terminal is appropriate.
	Inspection result (Is the judging standard satisfied?)	YES	Go to step 7.
		NO	Modify connector.

Step 7	Inspection items		Inspection of harness between fuse and relay
	Maintenance item		Check circuit between fuse No. B3 and relay connector terminal No. 5.
	Inspection condition		Disconnect each device from harness and measure from connection side of harness connector.
	Requirements		There is continuity.
	Inspection result (Is the judging standard satisfied?)	YES	Go to step 8.
		NO	Modify harness.

Step 8	Inspection items		Inspection of harness between relay and electronic drive unit
	Maintenance item		Check circuit between relay connector terminal No. 4 and electronic drive unit connector terminal No. 13.
	Inspection condition		Disconnect each device from harness and measure from connection side of harness connector.
	Requirements		There is continuity.
	Inspection result (Is the judging standard satisfied?)	YES	After replacement of electronic drive unit relay, go to step 9.
		NO	Modify harness.

Step 9	Inspection items		Inspection of harness between electronic drive unit and ground
	Maintenance item		Check circuit between following electronic drive unit connector. • Electronic drive unit ground: terminal No. 14 - chassis ground • Sensor shield ground (U): terminal No. 5 - 14 • Sensor shield ground (V): terminal No. 6 - 14 • Sensor shield ground (W): terminal No. 7 - 14 • Sensor ground: terminal No. 4 - 14
	Inspection condition		Disconnect each device from harness and measure from connection side of harness connector.
	Requirements		There is continuity.
	Inspection result (Is the judging standard satisfied?)	YES	Go to step 10.
		NO	Modify harness.

Step 10	Inspection items		Inspection of electronic drive unit connector (motor)
	Maintenance item		Measure value of resistance between following connector terminals. • Between U - V: 10 - 11 • Between U - W: 10 - 12 • Between V - W: 11 - 12
	Inspection condition		–
	Requirements		2.1 ± 0.3 Ω
	Inspection result (Is the judging standard satisfied?)	YES	Go to step 13.
		NO	Go to step 11.

Step 11	Inspection items		Inspection of harness between electronic drive unit and exhaust gas recirculation valve (motor)
	Maintenance item		Check circuit between following connector terminals. • Motor (U): electronic drive unit connector terminal No. 10 - exhaust gas recirculation valve connector terminal No. 8 • Motor (V): electronic drive unit connector terminal No. 11 - exhaust gas recirculation valve connector terminal No. 7 • Motor (W): electronic drive unit connector terminal No. 12 - exhaust gas recirculation valve connector terminal No. 6
	Inspection condition		Disconnect each device from harness and measure from connection side of harness connector.
	Requirements		There is continuity.
	Inspection result (Is the judging standard satisfied?)	YES	Go to step 12.
		NO	Modify harness.

Step 12	Inspection items		Inspection of exhaust gas recirculation valve unit (motor)
	Maintenance item		Measure value of resistance between following exhaust gas recirculation valve connector terminals. • Between U - V: 8 - 7 • Between U - W: 8 - 6 • Between V - W: 7 - 6
	Inspection condition		• Keep exhaust gas recirculation valve installed on vehicle. • Remove harness connector, and measure exhaust gas recirculation valve side.
	Requirements		2.1 ± 0.3 Ω
	Inspection result (Is the judging standard satisfied?)	YES	Go to step 13.
		NO	Replacement of exhaust gas recirculation valve

<Step 12 inspection diagram>

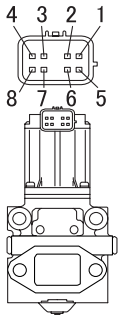

P104214

Step 13	Inspection items		Inspection of exhaust gas recirculation valve connector (position sensor: power supply)
	Maintenance item		Measure value of voltage between connector terminal No. 1 (+) and 5 (–).
	Inspection condition		• Measure from back side of connector of harness with each device connected to harness. • Starter switch: ON
	Requirements		10 V
	Inspection result (Is the judging standard satisfied?)	YES	Go to step 14.
		NO	Go to step 15.

Step 14	Inspection items		Inspection of electronic drive unit connector (position sensor: signal)
	Maintenance item		Measure value of voltage between following electronic drive unit connector terminals. • U signal output: terminal 1 (+) - 4 (–) • V signal output: terminal 2 (+) - 4 (–) • W signal output: terminal 3 (+) - 4 (–)
	Inspection condition		• Measure from back side of connector of harness with each device connected to harness. • Starter switch: ON • Perform actuator test item No. A9 “EDU Relay”
	Requirements		8 to 11 V
	Inspection result (Is the judging standard satisfied?)	YES	Go to step 16.
		NO	Go to step 15.

Step 15	Inspection items		Inspection of harness between electronic drive unit and exhaust gas recirculation valve (position sensor)
	Maintenance item		Check circuit between following connector terminals. • Sensor (power supply): electronic drive unit connector terminal No. 8 - exhaust gas recirculation valve connector terminal No. 1 • Sensor (U): electronic drive unit connector terminal No. 1 - exhaust gas recirculation valve connector terminal No. 4 • Sensor (V): electronic drive unit connector terminal No. 2 - exhaust gas recirculation valve connector terminal No. 3 • Sensor (W): electronic drive unit connector terminal No. 3 - exhaust gas recirculation valve connector terminal No. 2 • Sensor (ground): electronic drive unit connector terminal No. 4 - exhaust gas recirculation valve connector terminal No. 5
	Inspection condition		Disconnect each device from harness and measure from connection side of harness connector.
	Requirements		There is continuity.
	Inspection result (Is the judging standard satisfied?)	YES	After replacement of exhaust gas recirculation valve, go to step 16.
		NO	Modify harness.

Step 16	Inspection items		Inspection by control data
	Maintenance item		Perform actuator test item No. A1 “EGR1, 3”. **NOTE** • **As initial operational check of exhaust gas recirculation valve is automatically effected immediately after starter switch is ON, perform actuator test by Multi-Use Tester after that check (approximately 5 seconds later).**
	Inspection condition		• Vehicle: stationary (vehicle speed 0 km/h {0 MPH}) • Starter switch: ON (engine started) • Transmission: neutral • Diagnosis switch: OFF (fuse removed)
	Requirements		Actual position matches with target value set by Multi-Use Tester (check with service data “0E: EGR1 Actual Position” and “0F: EGR3 Actual Position”).
	Inspection result (Is the judging standard satisfied?)	YES	Go to transient fault (See Gr00.).
		NO	Replacement of electronic drive unit

[Fault code]
Diagnosis code: P0404/Flash code: 02, 67
[Monitor]
Abnormality in exhaust gas recirculation valve (actuator)
[Fault (outline)]
- Actuator stuck
- Initialization error
- Valve not close

[Diagnosis check]
- Exhaust gas recirculation electronic drive unit monitors exhaust gas recirculation valve driving motor and sends fault information to engine electronic control unit through controller area network communication.

[Code generation condition]
Diagnosis code is generated under either of the following conditions. (Warning lamp is lit and diagnosis code is displayed on first establishment of code generation condition.)
- Motor remains stuck as detected by throttle electronic drive unit 1 or 3 for more than 13 seconds.
- The errors which indicate the exhaust gas recirculation valve initialization failed or valve abnormally closed condition are received from the exhaust gas recirculation electronic drive unit 1 or 3.
- From electronic drive unit is sent abnormal information the total reception time of which (through controller area network 2) exceeds 6 seconds.

[Diagnosis check timing]
- When code generation condition is established after starter switch ON

[Diagnostic requirement]
- 2 seconds passed after starter switch ON
- 2 seconds passed after cranking
- Battery voltage: normal

[Control effected by electronic control unit during fault]
- Injection quantity is limited.
- Exhaust gas recirculation control is stopped.
- Throttle control is stopped.
- Diesel particulate filter regeneration (manual or automatic) is stopped.

[Probable cause of trouble]
- Open-circuit or short-circuit of harness between exhaust gas recirculation electronic drive unit and exhaust gas recirculation valve
- Abnormality of each connector
- Abnormality of exhaust gas recirculation motor (built in exhaust gas recirculation valve)
- Abnormality of exhaust gas recirculation position sensor (built in exhaust gas recirculation valve)
- Abnormality of exhaust gas recirculation electronic drive unit
- Abnormality of electronic drive unit relay

[Recoverability]
[Abnormality in valve closing]
- Recovered if signal becomes normal with starter switch in ON position.

[Abnormality of actuator]
- Recovered if signal becomes normal when starter switch is turned OFF to ON (power supply resumed to electronic control unit).

<Warning lamp>
- Extinguished at 4th driving cycle after normal signal is input.

<Fault code>
- Automatically cleared at 40th warm up cycle after warning lamp is extinguished. (To clear as desired, erase from the memory.)

Driving cycle : “Starter switch ON to start engine till starter switch OFF” constitutes 1 driving cycle.
Warm up cycle : “Starter switch ON to start engine till starter switch OFF after coolant temperature increased and engine warmed up” constitutes 1 warm up cycle.

[Electronic Control Unit Connection Diagram]

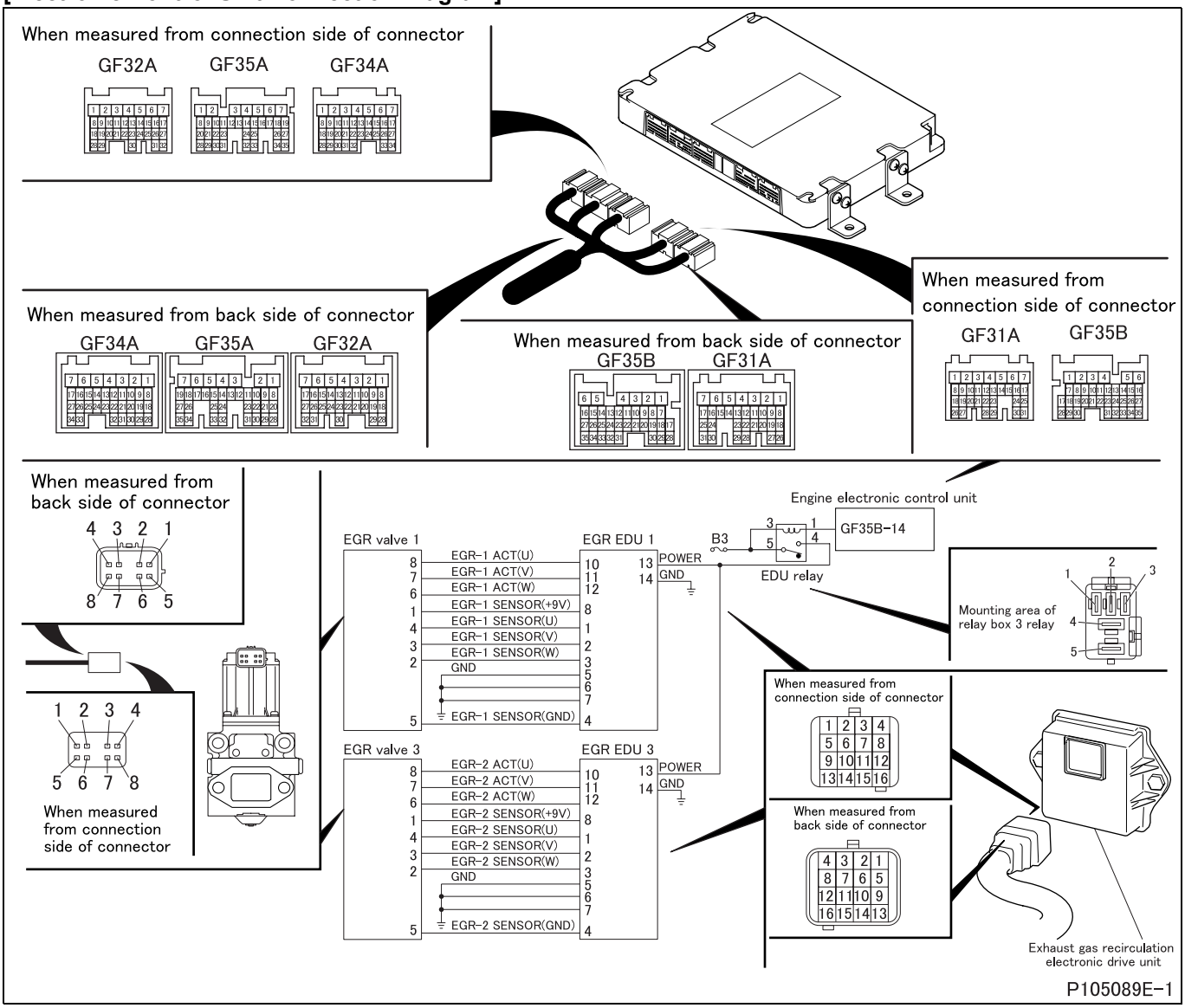

[Parts Identification and Location]

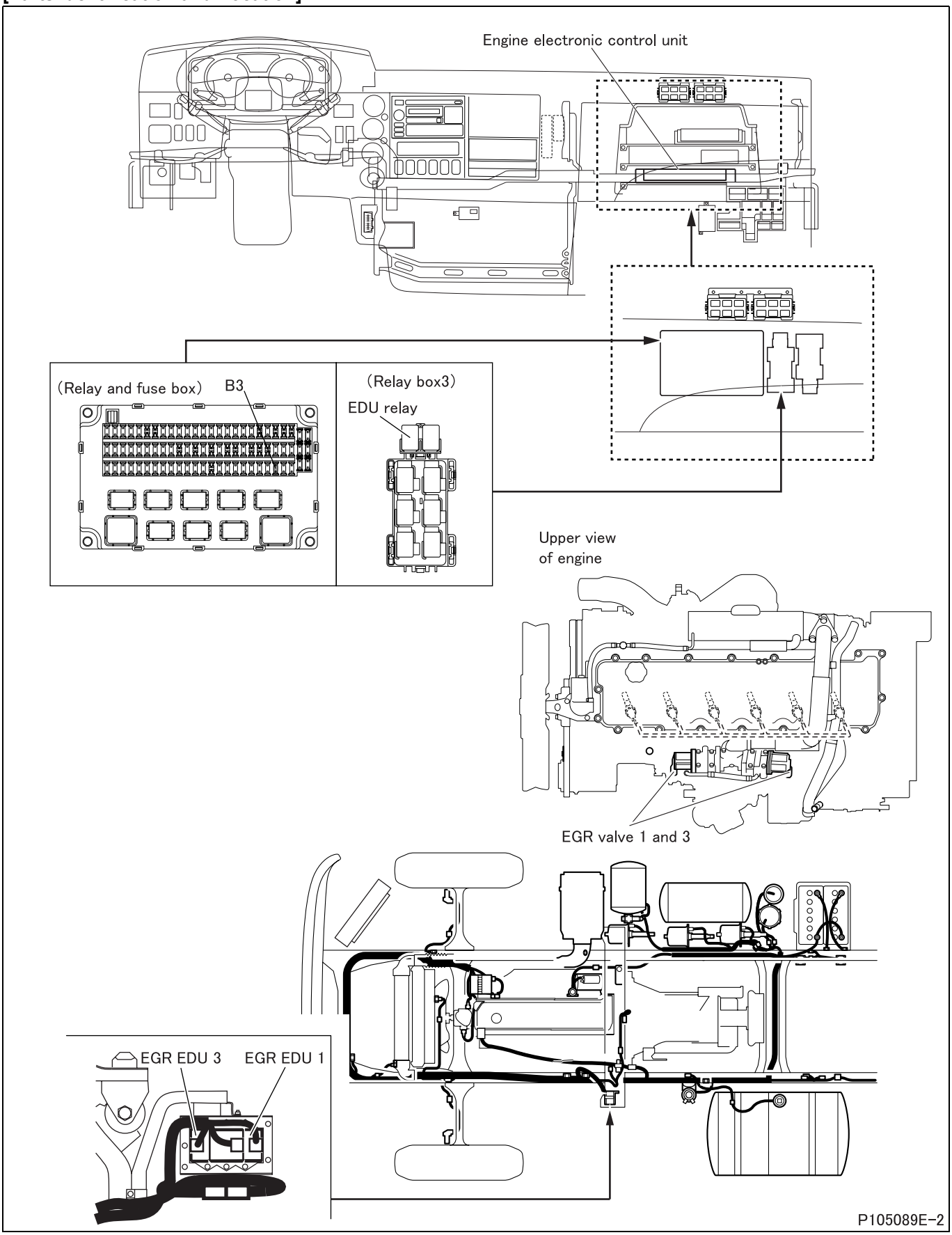

[Fault diagnosis]

- Perform checks in the sequence of the following steps.

Step 1	Inspection items		Inspection by control data
	Maintenance item		Perform actuator test item No. A1 “EGR1, 3”. **NOTE** • **As initial operational check of exhaust gas recirculation valve is automatically effected immediately after starter switch is ON, perform actuator test by Multi-Use Tester after that check (approximately 5 seconds later).**
	Inspection condition		• Vehicle: stationary (vehicle speed 0 km/h {0 MPH}) • Starter switch: ON (engine started) • Transmission: neutral (parking satisfactory for automatic transmission)
	Requirements		Actual position matches with target value set by Multi-Use Tester (check with service data “0E: EGR1 Actual Position” and “0F: EGR3 Actual Position”).
	Inspection result (Is the judging standard satisfied?)	YES	Go to transient fault (See Gr00.).
		NO	Go to step 2.

Step 2	Inspection items		Inspection of electronic drive unit connector
	Maintenance item		Inspection of connector
	Inspection condition		–
	Requirements		• Connector is properly connected. • No trace of water entry is found. • No corrosion is found in terminal. • Connection to terminal is appropriate.
	Inspection result (Is the judging standard satisfied?)	YES	Go to step 3.
		NO	Modify connector.

Step 3	Inspection items		Inspection of exhaust gas recirculation valve connector
	Maintenance item		Inspection of connector
	Inspection condition		–
	Requirements		• Connector is properly connected. • No trace of water entry is found. • No corrosion is found in terminal. • Connection to terminal is appropriate.
	Inspection result (Is the judging standard satisfied?)	YES	Go to step 4.
		NO	Modify connector.

Step 4	Inspection items		Inspection by control data
	Maintenance item		Check if following diagnosis codes occur simultaneously. • P0685 “EDU Relay (Open)” • P0686 “EDU Relay (Low)” • P0687 “EDU Relay (High)” • P0688 “EDU Relay (Over Load)”
	Inspection condition		Starter switch: ON
	Requirements		No codes occur.
	Inspection result (Is the judging standard satisfied?)	YES	Go to step 5.
		NO	Inspect diagnosis code that is occurring.

Step 5	Inspection items		Inspection of electronic drive unit connector (power supply)
	Maintenance item		Measure value of voltage between connector terminal No. 13 (+) and 14 (–).
	Inspection condition		• Remove connector and measure from harness side. • Starter switch: ON • Perform actuator test item No. A9 “EDU Relay”.
	Requirements		Same as battery voltage.
	Inspection result (Is the judging standard satisfied?)	YES	Go to step 10.
		NO	Go to step 6.

Step 6	Inspection items		Inspection of relay connector
	Maintenance item		Inspection of connector
	Inspection condition		–
	Requirements		• Connector is properly connected. • No trace of water entry is found. • No corrosion is found in terminal. • Connection to terminal is appropriate.
	Inspection result (Is the judging standard satisfied?)	YES	Go to step 7.
		NO	Modify connector.

Step 7	Inspection items		Inspection of harness between fuse and relay
	Maintenance item		Check circuit between fuse No. B3 and relay connector terminal No. 5.
	Inspection condition		Disconnect each device from harness and measure from connection side of harness connector.
	Requirements		There is continuity.
	Inspection result (Is the judging standard satisfied?)	YES	Go to step 8.
		NO	Modify harness.

Step 8	Inspection items		Inspection of harness between relay and electronic drive unit
	Maintenance item		Check circuit between relay connector terminal No. 4 and electronic drive unit connector terminal No. 13.
	Inspection condition		Disconnect each device from harness and measure from connection side of harness connector.
	Requirements		There is continuity.
	Inspection result (Is the judging standard satisfied?)	YES	After replacement of electronic drive unit relay, go to step 9.
		NO	Modify harness.

Step 9	Inspection items		Inspection of harness between electronic drive unit and ground
	Maintenance item		Check circuit between following electronic drive unit connector • Electronic drive unit ground: terminal No. 14 - chassis ground • Sensor shield ground (U): terminal No. 5 - 14 • Sensor shield ground (V): terminal No. 6 - 14 • Sensor shield ground (W): terminal No. 7 - 14 • Sensor ground: terminal No. 4 - 14
	Inspection condition		Disconnect each device from harness and measure from connection side of harness connector.
	Requirements		There is continuity.
	Inspection result (Is the judging standard satisfied?)	YES	Go to step 10.
		NO	Modify harness.

Step 10	Inspection items		Inspection of electronic drive unit connector (motor)
	Maintenance item		Measure value of resistance between following connector terminals. • Between U - V: 10 - 11 • Between U - W: 10 - 12 • Between V - W: 11 - 12
	Inspection condition		–
	Requirements		2.1 ± 0.3 Ω
	Inspection result (Is the judging standard satisfied?)	YES	Go to step 13.
		NO	Go to step 11.

Step 11	Inspection items		Inspection of harness between electronic drive unit and exhaust gas recirculation valve (motor)
	Maintenance item		Check circuit between following connector terminals. • Motor (U): electronic drive unit connector terminal No. 10 - exhaust gas recirculation valve connector terminal No. 8 • Motor (V): electronic drive unit connector terminal No. 11 - exhaust gas recirculation valve connector terminal No. 7 • Motor (W): electronic drive unit connector terminal No. 12 - exhaust gas recirculation valve connector terminal No. 6
	Inspection condition		Disconnect each device from harness and measure from connection side of harness connector.
	Requirements		There is continuity.
	Inspection result (Is the judging standard satisfied?)	YES	Go to step 12.
		NO	Modify harness.

Step 12	Inspection items		Inspection of exhaust gas recirculation valve unit (motor)
	Maintenance item		Measure value of resistance between following exhaust gas recirculation valve connector terminals. • Between U - V: 8 - 7 • Between U - W: 8 - 6 • Between V - W: 7 - 6
	Inspection condition		• Keep exhaust gas recirculation valve installed on vehicle. • Remove harness connector, and measure exhaust gas recirculation valve side.
	Requirements		2.1 ± 0.3 Ω
	Inspection result (Is the judging standard satisfied?)	YES	Go to step 13.
		NO	Replacement of exhaust gas recirculation valve

<Step 12 inspection diagram>

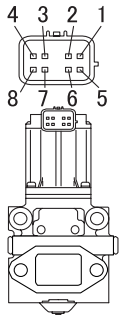

P104214

Step 13	Inspection items		Inspection of exhaust gas recirculation valve connector (position sensor: power supply)
	Maintenance item		Measure value of voltage between connector terminal No. 1 (+) and 5 (–).
	Inspection condition		• Measure from back side of connector of harness with each device connected to harness. • Starter switch: ON
	Requirements		10 V
	Inspection result (Is the judging standard satisfied?)	YES	Go to step 14.
		NO	Go to step 15.

Step 14	Inspection items		Inspection of electronic drive unit connector (position sensor: signal)
	Maintenance item		Measure value of voltage between following electronic drive unit connector terminals • U signal output: terminal 1 (+) - 4 (–) • V signal output: terminal 2 (+) - 4 (–) • W signal output: terminal 3 (+) - 4 (–)
	Inspection condition		• Measure from back side of connector of harness with each device connected to harness. • Starter switch: ON • Perform actuator test item No. A9 “EDU Relay”
	Requirements		8 to 11 V
	Inspection result (Is the judging standard satisfied?)	YES	Go to step 16.
		NO	Go to step 15.

Step 15	Inspection items		Inspection of harness between electronic drive unit and exhaust gas recirculation valve (position sensor)
	Maintenance item		Check circuit between following connector terminals. • Sensor (power supply): electronic drive unit connector terminal No. 8 - exhaust gas recirculation valve connector terminal No. 1 • Sensor (U): electronic drive unit connector terminal No. 1 - exhaust gas recirculation valve connector terminal No. 4 • Sensor (V): electronic drive unit connector terminal No. 2 - exhaust gas recirculation valve connector terminal No. 3 • Sensor (W): electronic drive unit connector terminal No. 3 - exhaust gas recirculation valve connector terminal No. 2 • Sensor (ground): electronic drive unit connector terminal No. 4 - exhaust gas recirculation valve connector terminal No. 5
	Inspection condition		Disconnect each device from harness and measure from connection side of harness connector.
	Requirements		There is continuity.
	Inspection result (Is the judging standard satisfied?)	YES	After replacement of exhaust gas recirculation valve, go to step 16.
		NO	Modify harness.

Step 16	Inspection items		Inspection by control data
	Maintenance item		Perform actuator test item No. A1 “EGR1, 3”. **NOTE** • **As initial operational check of exhaust gas recirculation valve is automatically effected immediately after starter switch is ON, perform actuator test by Multi-Use Tester after that check (approximately 5 seconds later).**
	Inspection condition		• Vehicle: stationary (vehicle speed 0 km/h {0 MPH}) • Starter switch: ON (engine started) • Transmission: neutral • Diagnosis switch: OFF (fuse removed)
	Requirements		Actual position matches with target value set by Multi-Use Tester (check with service data “0E: EGR1 Actual Position” and “0F: EGR3 Actual Position”).
	Inspection result (Is the judging standard satisfied?)	YES	Go to transient fault (See Gr00.).
		NO	Replacement of electronic drive unit

[Fault code]
Diagnosis code: P0409/Flash code: 67
[Monitor]
Abnormality in exhaust gas recirculation valve (position sensor)
[Fault (outline)]
Abnormal position
[Diagnosis check]
- Exhaust gas recirculation electronic drive unit monitors position sensor of exhaust gas recirculation valve driving motor and sends abnormality information to engine electronic control unit through controller area network communication.

[Code generation condition]
- Voltage of position sensor remains out of specification (open: above 4.7 V, close: below 0.2 V) for 1 second. (Warning lamp is lit and diagnosis code is displayed on first establishment of code generation condition.)

[Diagnosis check timing]
- When code generation condition is established after starter switch ON

[Diagnostic requirement]
- 2 seconds passed after starter switch ON
- 2 seconds passed after cranking
- Battery voltage: normal

[Control effected by electronic control unit during fault]
- Injection quantity is limited.
- Exhaust gas recirculation control is stopped.
- Throttle control is stopped.
- Diesel particulate filter regeneration (manual or automatic) is stopped.

[Probable cause of trouble]
- Open-circuit or short-circuit of harness between exhaust gas recirculation electronic drive unit and exhaust gas recirculation valve
- Abnormality of each connector
- Abnormality of exhaust gas recirculation motor (built in exhaust gas recirculation valve)
- Abnormality of exhaust gas recirculation position sensor (built in exhaust gas recirculation valve)
- Abnormality of exhaust gas recirculation electronic drive unit
- Abnormality of electronic drive unit relay

[Recoverability]
<Control during fault>
- Recovered if signal becomes normal with starter switch in ON position.

<Warning lamp>
- Extinguished at 4th driving cycle after normal signal is input.

<Fault code>
- Automatically cleared at 40th warm up cycle after warning lamp is extinguished. (To clear as desired, erase from the memory.)

Driving cycle : “Starter switch ON to start engine till starter switch OFF” constitutes 1 driving cycle.
Warm up cycle : “Starter switch ON to start engine till starter switch OFF after coolant temperature increased and engine warmed up” constitutes 1 warm up cycle.

[Electronic Control Unit Connection Diagram]

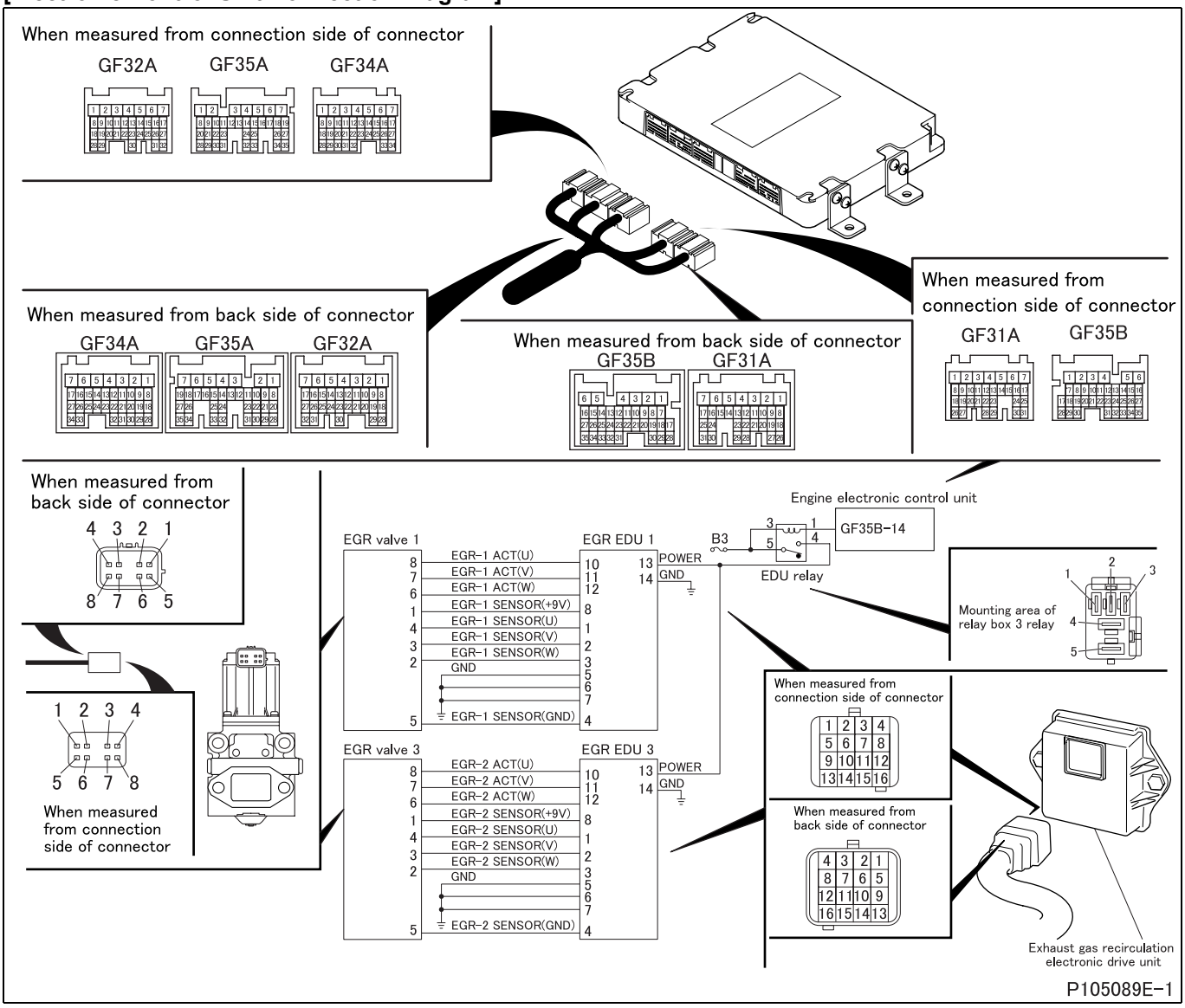

[Parts Identification and Location]

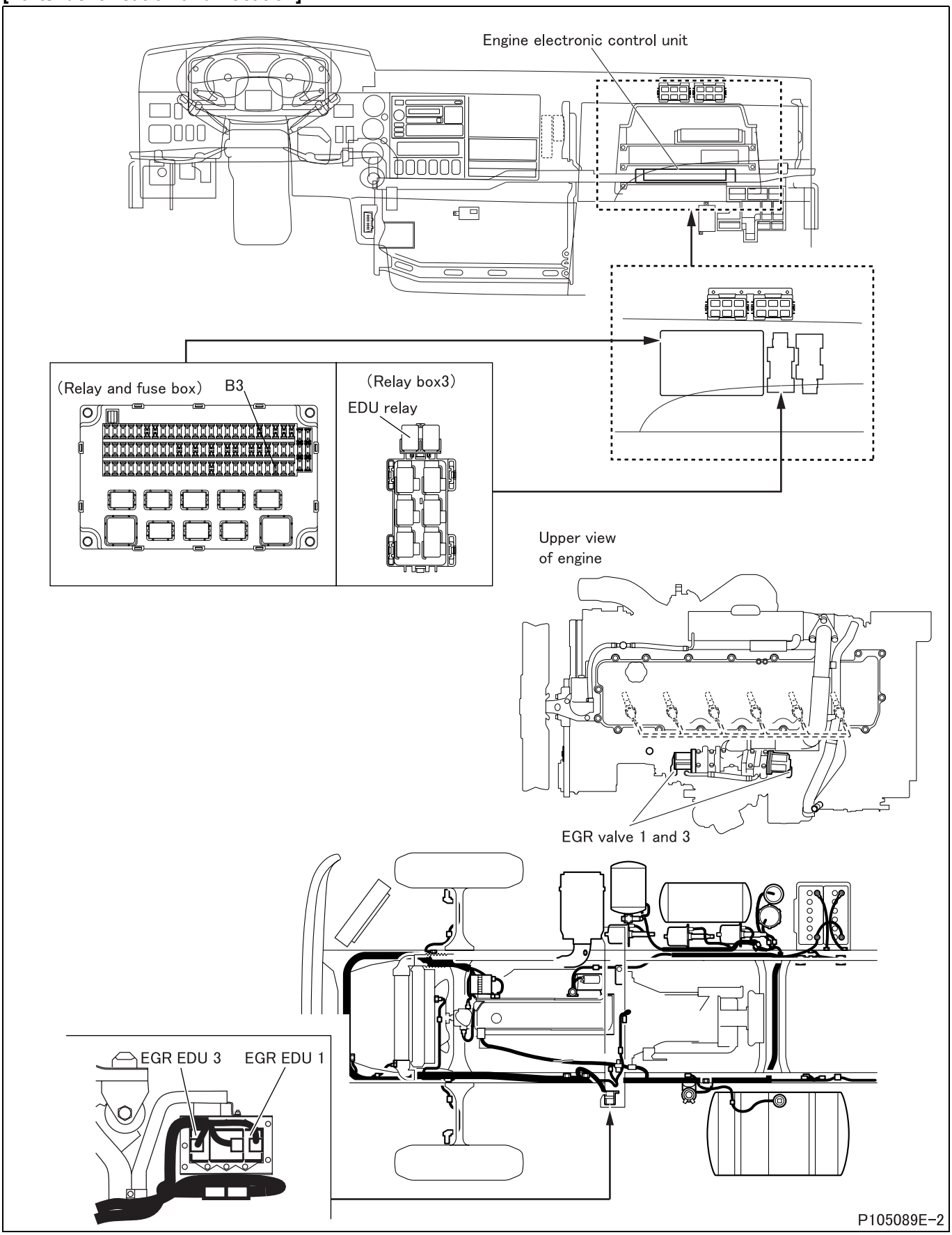

[Fault diagnosis]

- Perform checks in the sequence of the following steps.

Step 1	Inspection items		Inspection by control data
	Maintenance item		Perform actuator test item No. A1 “EGR1, 3”. **NOTE** • **As initial operational check of exhaust gas recirculation valve is automatically effected immediately after starter switch is ON, perform actuator test by Multi-Use Tester after that check (approximately 5 seconds later).**
	Inspection condition		• Vehicle: stationary (vehicle speed 0 km/h {0 MPH}) • Starter switch: ON (engine started) • Transmission: neutral (parking satisfactory for automatic transmission)
	Requirements		Actual position matches with target value set by Multi-Use Tester (check with service data “0E: EGR1 Actual Position” and “0F: EGR3 Actual Position”).
	Inspection result (Is the judging standard satisfied?)	YES	Go to transient fault (See Gr00.).
		NO	Go to step 2.

Step 2	Inspection items		Inspection of electronic drive unit connector
	Maintenance item		Inspection of connector
	Inspection condition		–
	Requirements		• Connector is properly connected. • No trace of water entry is found. • No corrosion is found in terminal. • Connection to terminal is appropriate.
	Inspection result (Is the judging standard satisfied?)	YES	Go to step 3.
		NO	Modify connector.

Step 3	Inspection items		Inspection of exhaust gas recirculation valve connector
	Maintenance item		Inspection of connector
	Inspection condition		–
	Requirements		• Connector is properly connected. • No trace of water entry is found. • No corrosion is found in terminal. • Connection to terminal is appropriate.
	Inspection result (Is the judging standard satisfied?)	YES	Go to step 4.
		NO	Modify connector.

Step 4	Inspection items		Inspection by control data
	Maintenance item		Check if following diagnosis codes occur simultaneously. • P0685 “EDU Relay (Open)” • P0686 “EDU Relay (Low)” • P0687 “EDU Relay (High)” • P0688 “EDU Relay (Over Load)”
	Inspection condition		Starter switch: ON
	Requirements		No codes occur.
	Inspection result (Is the judging standard satisfied?)	YES	Go to step 5.
		NO	Inspect diagnosis code that is occurring.

Step 5	Inspection items		Inspection of electronic drive unit connector (power supply)
	Maintenance item		Measure value of voltage between connector terminal No. 13 (+) and 14 (–).
	Inspection condition		• Remove connector and measure from harness side. • Starter switch: ON • Perform actuator test item No. A9 “EDU Relay”
	Requirements		Same as battery voltage.
	Inspection result (Is the judging standard satisfied?)	YES	Go to step 10.
		NO	Go to step 6.

Step 6	Inspection items		Inspection of relay connector
	Maintenance item		Inspection of connector
	Inspection condition		–
	Requirements		• Connector is properly connected. • No trace of water entry is found. • No corrosion is found in terminal. • Connection to terminal is appropriate.
	Inspection result (Is the judging standard satisfied?)	YES	Go to step 7.
		NO	Modify connector.

Step 7	Inspection items		Inspection of harness between fuse and relay
	Maintenance item		Check circuit between fuse No. B3 and relay connector terminal No. 5.
	Inspection condition		Disconnect each device from harness and measure from connection side of harness connector.
	Requirements		There is continuity.
	Inspection result (Is the judging standard satisfied?)	YES	Go to step 8.
		NO	Modify harness.

Step 8	Inspection items		Inspection of harness between relay and electronic drive unit
	Maintenance item		Check circuit between relay connector terminal No. 4 and electronic drive unit connector terminal No. 13.
	Inspection condition		Disconnect each device from harness and measure from connection side of harness connector.
	Requirements		There is continuity.
	Inspection result (Is the judging standard satisfied?)	YES	After replacement of electronic drive unit relay, go to step 9.
		NO	Modify harness.

Step 9	Inspection items		Inspection of harness between electronic drive unit and ground
	Maintenance item		Check circuit between following electronic drive unit connector • Electronic drive unit ground: terminal No. 14 - chassis ground • Sensor shield ground (U): terminal No. 5 - 14 • Sensor shield ground (V): terminal No. 6 - 14 • Sensor shield ground (W): terminal No. 7 - 14 • Sensor ground: terminal No. 4 - 14
	Inspection condition		Disconnect each device from harness and measure from connection side of harness connector.
	Requirements		There is continuity.
	Inspection result (Is the judging standard satisfied?)	YES	Go to step 10.
		NO	Modify harness.

Step 10	Inspection items		Inspection of electronic drive unit connector (motor)
	Maintenance item		Measure value of resistance between following connector terminals. • Between U - V: 10 - 11 • Between U - W: 10 - 12 • Between V - W: 11 - 12
	Inspection condition		–
	Requirements		2.1 ± 0.3 Ω
	Inspection result (Is the judging standard satisfied?)	YES	Go to step 13.
		NO	Go to step 11.

Step 11	Inspection items		Inspection of harness between electronic drive unit and exhaust gas recirculation valve (motor)
	Maintenance item		Check circuit between following connector terminals. • Motor (U): electronic drive unit connector terminal No. 10 - exhaust gas recirculation valve connector terminal No. 8 • Motor (V): electronic drive unit connector terminal No. 11 - exhaust gas recirculation valve connector terminal No. 7 • Motor (W): electronic drive unit connector terminal No. 12 - exhaust gas recirculation valve connector terminal No. 6
	Inspection condition		Disconnect each device from harness and measure from connection side of harness connector.
	Requirements		There is continuity.
	Inspection result (Is the judging standard satisfied?)	YES	Go to step 12.
		NO	Modify harness.

Step 12	Inspection items		Inspection of exhaust gas recirculation valve unit (motor)
	Maintenance item		Measure value of resistance between following exhaust gas recirculation valve connector terminals. • Between U - V: 8 - 7 • Between U - W: 8 - 6 • Between V - W: 7 - 6
	Inspection condition		• Keep exhaust gas recirculation valve installed on vehicle. • Remove harness connector, and measure exhaust gas recirculation valve side.
	Requirements		2.1 ± 0.3 Ω
	Inspection result (Is the judging standard satisfied?)	YES	Go to step 13.
		NO	Replacement of exhaust gas recirculation valve

<Step 12 inspection diagram>

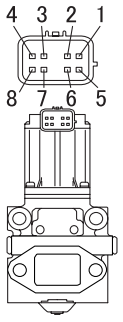

P104214

Step 13	Inspection items		Inspection of exhaust gas recirculation valve connector (position sensor: power supply)
	Maintenance item		Measure value of voltage between connector terminal No. 1 (+) and 5 (–).
	Inspection condition		• Measure from back side of connector of harness with each device connected to harness. • Starter switch: ON
	Requirements		10 V
	Inspection result (Is the judging standard satisfied?)	YES	Go to step 14.
		NO	Go to step 15.

Step 14	Inspection items		Inspection of electronic drive unit connector (position sensor: signal)
	Maintenance item		Measure value of voltage between following electronic drive unit connector terminals. • U signal output: terminal 1 (+) - 4 (–) • V signal output: terminal 2 (+) - 4 (–) • W signal output: terminal 3 (+) - 4 (–)
	Inspection condition		• Measure from back side of connector of harness with each device connected to harness. • Starter switch: ON • Perform actuator test item No. A9 “EDU Relay”
	Requirements		8 to 11 V
	Inspection result (Is the judging standard satisfied?)	YES	Go to step 16.
		NO	Go to step 15.

Step 15	Inspection items		Inspection of harness between electronic drive unit and exhaust gas recirculation valve (position sensor)
	Maintenance item		Check circuit between following connector terminals. • Sensor (power supply): electronic drive unit connector terminal No. 8 - exhaust gas recirculation valve connector terminal No. 1 • Sensor (U): electronic drive unit connector terminal No. 1 - exhaust gas recirculation valve connector terminal No. 4 • Sensor (V): electronic drive unit connector terminal No. 2 - exhaust gas recirculation valve connector terminal No. 3 • Sensor (W): electronic drive unit connector terminal No. 3 - exhaust gas recirculation valve connector terminal No. 2 • Sensor (ground): electronic drive unit connector terminal No. 4 - exhaust gas recirculation valve connector terminal No. 5
	Inspection condition		Disconnect each device from harness and measure from connection side of harness connector.
	Requirements		There is continuity.
	Inspection result (Is the judging standard satisfied?)	YES	After replacement of exhaust gas recirculation valve, go to step 16.
		NO	Modify harness.

Step 16	Inspection items		Inspection by control data
	Maintenance item		Perform actuator test item No. A1 “EGR1, 3”. **NOTE** • **As initial operational check of exhaust gas recirculation valve is automatically effected immediately after starter switch is ON, perform actuator test by Multi-Use Tester after that check (approximately 5 seconds later).**
	Inspection condition		• Vehicle: stationary (vehicle speed 0 km/h {0 MPH}) • Starter switch: ON (engine started) • Transmission: neutral • Diagnosis switch: OFF (fuse removed)
	Requirements		Actual position matches with target value set by Multi-Use Tester (check with service data “0E: EGR1 Actual Position” and “0F: EGR3 Actual Position”).
	Inspection result (Is the judging standard satisfied?)	YES	Go to transient fault (See Gr00.).
		NO	Replacement of electronic drive unit

[Fault code]
Diagnosis code: P0427/Flash code: 13
[Monitor]
Abnormality of catalytic temperature sensor
[Fault (outline)]
Low signal range check
[Diagnosis check]
- Catalytic temperature sensor output voltage is monitored.

[Code generation condition]
- Voltage of DPF temperature sensor 1 remains under 0.2 V for approx. 2.5 seconds.
  (Warning lamp is lit and diagnosis code is displayed on second establishment of code generation condition.)

[Diagnosis check timing]
- When code generation condition is established after starter switch ON

[Diagnostic requirement]
- 2 seconds passed after starter switch ON
- 2 seconds passed after cranking
- Battery voltage: normal
- Engine speed: more than 1200 rpm
- Injection quantity: more than 50 mm^3/st
- Water temperature: above –7°C {19°F}

[Control effected by electronic control unit during fault]
- Automatic diesel particulate filter regeneration is stopped.
- Control is carried out using backup value (200°C {392°F})

[Probable cause of trouble]
- Open-circuit or short-circuit of harness between electronic control unit and catalytic temperature sensor
- Abnormality of each connector
- Abnormality of catalytic temperature sensor
- Abnormality in electronic control unit

[Recoverability]
<Control during fault>
- Recovered if signal becomes normal with starter switch in ON position.

<Warning lamp>
- Extinguished at 4th driving cycle after normal signal is input.

<Fault code>
- Automatically cleared at 40th warm up cycle after warning lamp is extinguished. (To clear as desired, erase from the memory.)

Driving cycle : “Starter switch ON to start engine till starter switch OFF” constitutes 1 driving cycle.
Warm up cycle : “Starter switch ON to start engine till starter switch OFF after coolant temperature increased and engine warmed up” constitutes 1 warm up cycle.

[Electronic Control Unit Connection Diagram]

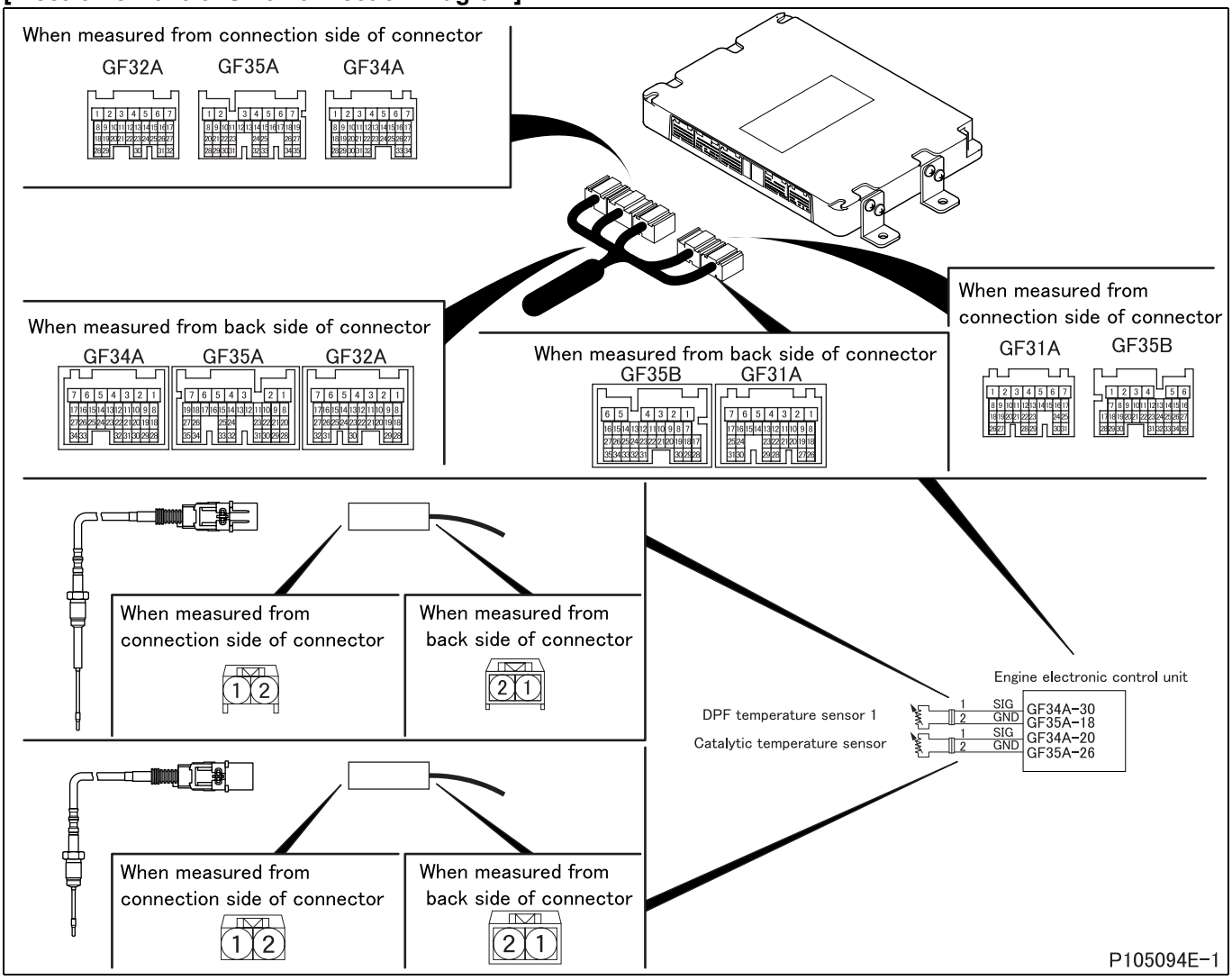

[Parts Identification and Location]

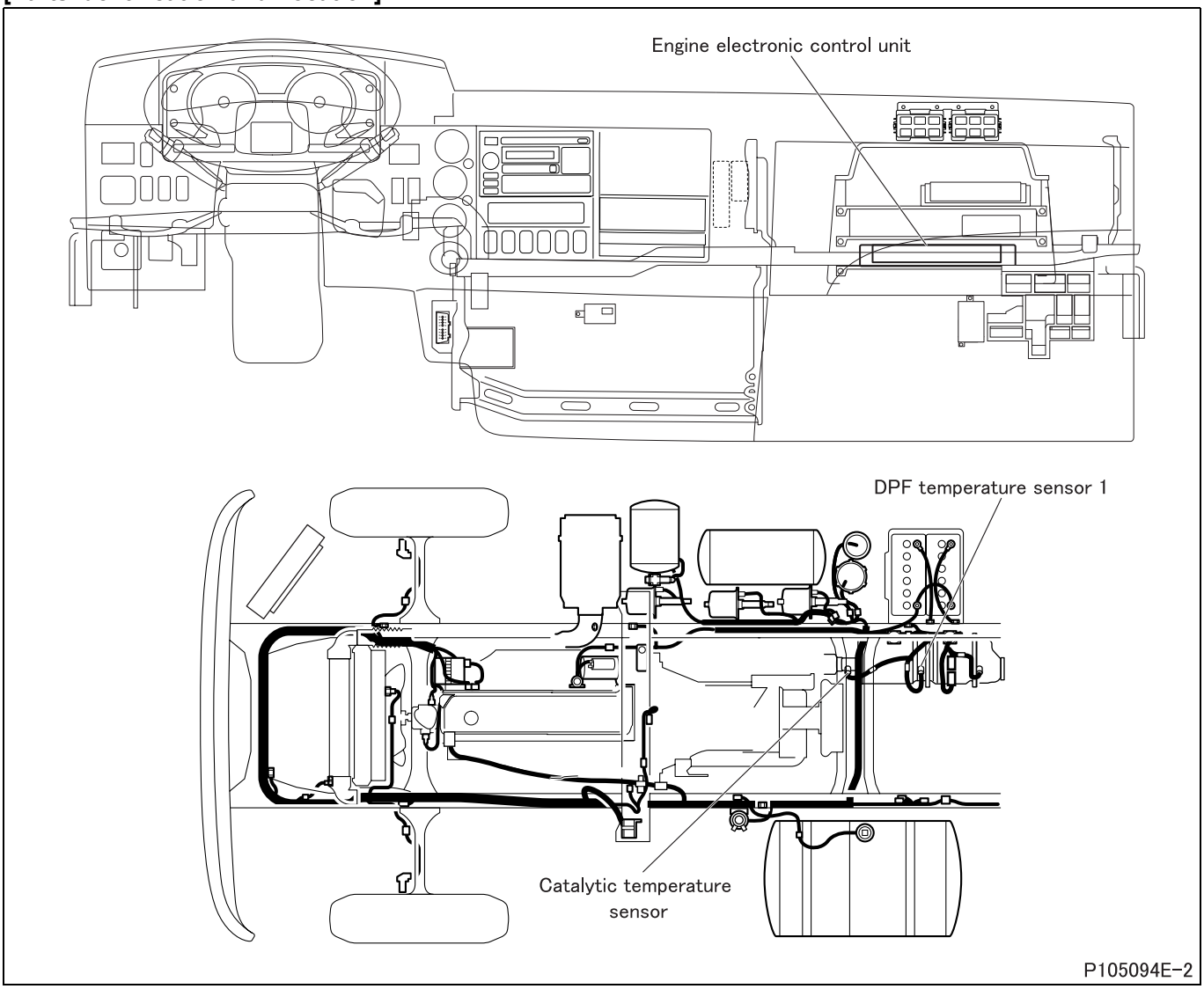

[Fault diagnosis]

- Perform checks in the sequence of the following steps.

Step 1	Inspection items		Inspection by control data
	Maintenance item		**<General Scanning Tool used>** • Measure item “OXI CAT Temperature”. **<Multi-Use Tester used>** • Measure item No. 58 “Exhaust Gas Temperature” of Service Data.
	Inspection condition		While engine is warmed up
	Requirements		Temperature gradually rises up.
	Inspection result (Is the judging standard satisfied?)	YES	Go to transient fault (See Gr00.).
		NO	Go to step 2.

Step 2	Inspection items		Inspection by electronic control unit connector
	Maintenance item		Measure value of voltage between connector (GF34A) terminal No. 20 and (GF35A) terminal No. 26.
	Inspection condition		• Starter switch: OFF • Disconnect electronic control unit from harness and measure at vehicle-side connector half.
	Requirements		• 20°C {68°F} : 241.8 kΩ • 50°C {122°F} : 106.2 $^{+74.3}_{-41.8}$ kΩ • 100°C {212°F} : 33.56 $^{+17.60}_{-10.60}$ kΩ • 150°C {302°F} : 13.90 $^{+5.36}_{-3.60}$ kΩ • 200°C {392°F} : 6.896 $^{+2.064}_{-1.252}$ kΩ
	Inspection result (Is the judging standard satisfied?)	YES	Go to step 3.
		NO	Go to step 4.

Step 3	Inspection items		Inspection of electronic control unit connector
	Maintenance item		Inspection of connector
	Inspection condition		–
	Requirements		• Connector is properly connected. • No trace of water entry is found. • No corrosion is found in terminal. • Connection to terminal is appropriate.
	Inspection result (Is the judging standard satisfied?)	YES	Go to step 8.
		NO	Modify connector.

Step 4	Inspection items		Inspection of sensor connector
	Maintenance item		Inspection of connector
	Inspection condition		–
	Requirements		• Connector is properly connected. • No trace of water entry is found. • No corrosion is found in terminal. • Connection to terminal is appropriate.
	Inspection result (Is the judging standard satisfied?)	YES	Go to step 5.
		NO	Modify connector.

Step 5	Inspection items		Inspection of catalytic temperature sensor unit
	Maintenance item		Measure value of resistance between connector terminal No. 1 and 2.
	Inspection condition		• Put catalytic temperature sensor in vessel filled with engine oil. • Heat the oil to each of the specified temperatures. Stir the oil well while doing so.
	Requirements		• 20°C {68°F} : 241.8 kΩ • 50°C {122°F} : 106.2 $^{+74.3}_{-41.8}$ kΩ • 100°C {212°F} : 33.56 $^{+17.60}_{-10.60}$ kΩ • 150°C {302°F} : 13.90 $^{+5.36}_{-3.60}$ kΩ • 200°C {392°F} : 6.896 $^{+2.064}_{-1.252}$ kΩ
	Inspection result (Is the judging standard satisfied?)	YES	Go to step 6.
		NO	Replacement of sensor

<Step 5 inspection diagram>

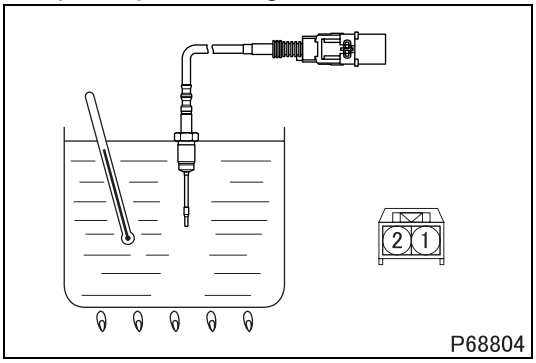

Step 6	Inspection items		Inspection of harness between electronic control unit and sensor (power supply)
	Maintenance item		Check circuit between electronic control unit connector (GF34A) terminal No. 20 and sensor connector terminal No. 1.
	Inspection condition		Disconnect each device from harness and measure from connection side of harness connector.
	Requirements		There is continuity.
	Inspection result (Is the judging standard satisfied?)	YES	Go to step 7.
		NO	Modify harness.

Step 7	Inspection items		Inspection of harness between electronic control unit and sensor (ground)
	Maintenance item		Check circuit between electronic control unit connector (GF35A) terminal No. 26 and sensor connector terminal No. 2.
	Inspection condition		Disconnect each device from harness and measure from connection side of harness connector.
	Requirements		There is continuity.
	Inspection result (Is the judging standard satisfied?)	YES	Go to step 8.
		NO	Modify harness.

Step 8	Inspection items		Inspection by control data
	Maintenance item		**<General Scanning Tool used>** • Measure item “OXI CAT Temperature”. **<Multi-Use Tester used>** • Measure item No. 58 “Exhaust Gas Temperature” of Service Data.
	Inspection condition		While engine is warmed up
	Requirements		Temperature gradually rises up.
	Inspection result (Is the judging standard satisfied?)	YES	Go to transient fault (See Gr00.).
		NO	Replacement of electronic control unit

[Fault code]
Diagnosis code: P0428/Flash code: 13
[Monitor]
Abnormality of catalytic temperature sensor
[Fault (outline)]
High signal range check
[Diagnosis check]
- Catalytic temperature sensor output voltage is monitored.

[Code generation condition]
- Voltage of DPF temperature sensor 1 remains over 4.96 V for approx. 1 second.
  (Warning lamp is lit and diagnosis code is displayed on second establishment of code generation condition.)

[Diagnosis check timing]
- When code generation condition is established after starter switch ON

[Diagnostic requirement]
- 2 seconds passed after starter switch ON
- 2 seconds passed after cranking
- Battery voltage: normal
- Engine speed: more than 1200 rpm
- Injection quantity: more than 50 mm^3/st
- Water temperature: above –7°C {19°F}

[Control effected by electronic control unit during fault]
- Automatic diesel particulate filter regeneration is stopped.
- Control is carried out using backup value (200°C {392°F}).

[Probable cause of trouble]
- Open-circuit or short-circuit of harness between electronic control unit and catalytic temperature sensor
- Abnormality of each connector
- Abnormality of catalytic temperature sensor
- Abnormality in electronic control unit

[Recoverability]
<Control during fault>
- Recovered if signal becomes normal with starter switch in ON position.

<Warning lamp>
- Extinguished at 4th driving cycle after normal signal is input.

<Fault code>
- Automatically cleared at 40th warm up cycle after warning lamp is extinguished. (To clear as desired, erase from the memory.)

Driving cycle : “Starter switch ON to start engine till starter switch OFF” constitutes 1 driving cycle.
Warm up cycle : “Starter switch ON to start engine till starter switch OFF after coolant temperature increased and engine warmed up” constitutes 1 warm up cycle.

[Electronic Control Unit Connection Diagram]

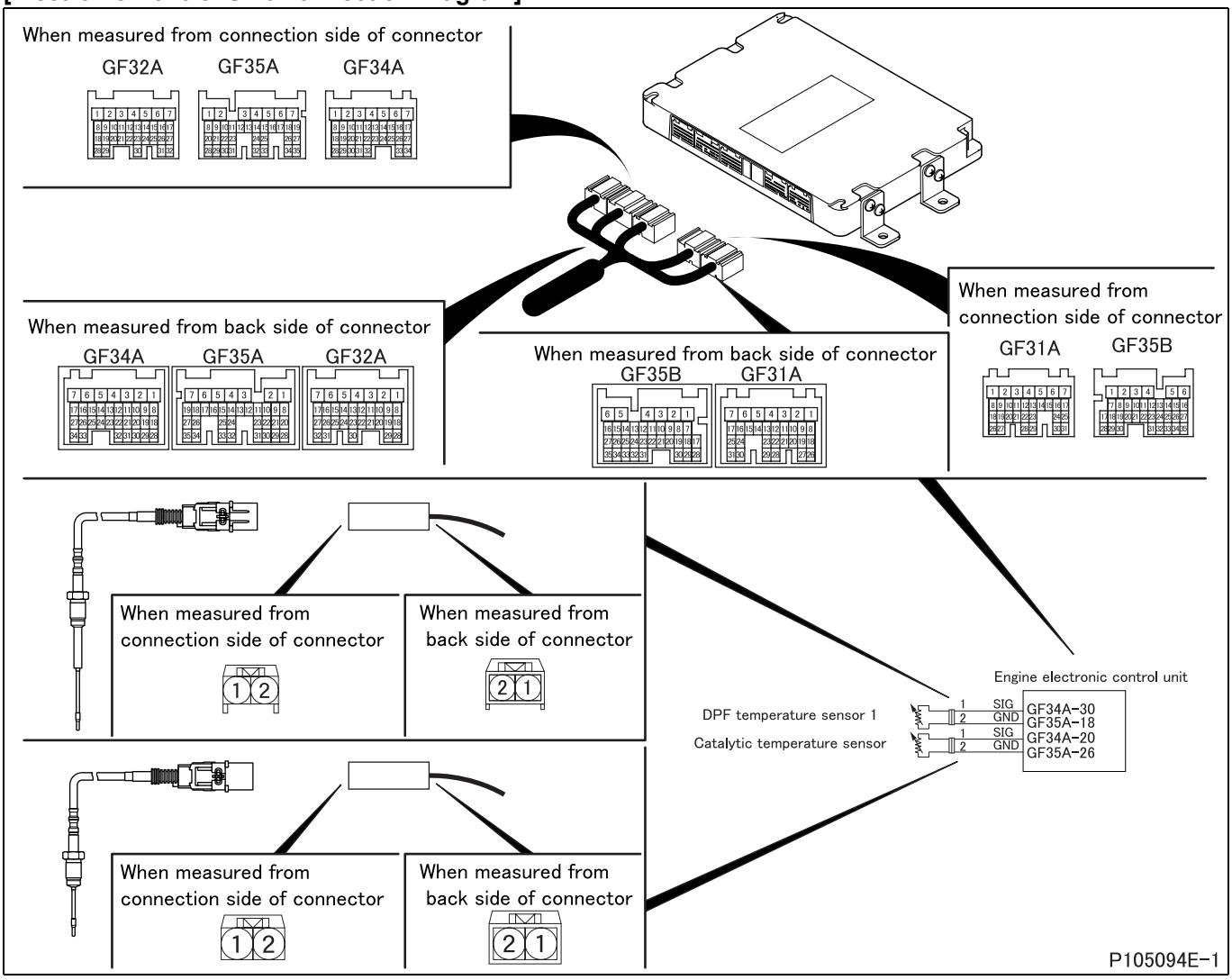

[Parts Identification and Location]

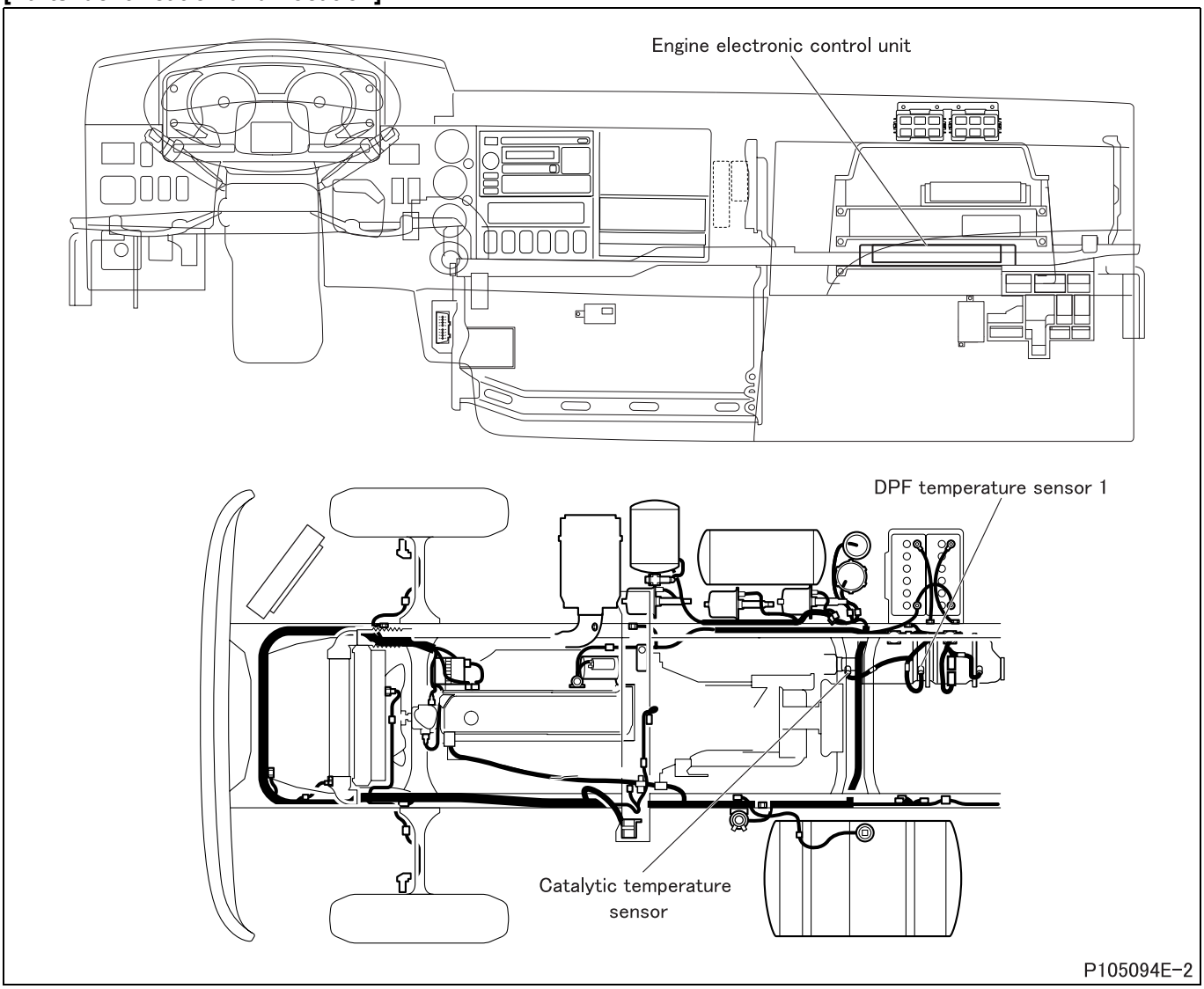

[Fault diagnosis]

- Perform checks in the sequence of the following steps.

Step 1	Inspection items		Inspection by control data
	Maintenance item		**<General Scanning Tool used>** • Measure item “OXI CAT Temperature”. **<Multi-Use Tester used>** • Measure item No. 58 “Exhaust Gas Temperature” of Service Data.
	Inspection condition		While engine is warmed up
	Requirements		Temperature gradually rises up.
	Inspection result (Is the judging standard satisfied?)	YES	Go to transient fault (See Gr00.).
		NO	Go to step 2.

Step 2	Inspection items		Inspection by electronic control unit connector
	Maintenance item		Measure value of voltage between connector (GF34A) terminal No. 20 and (GF35A) terminal No. 26.
	Inspection condition		• Starter switch: OFF • Disconnect electronic control unit from harness and measure at vehicle-side connector half.
	Requirements		• 20°C {68°F} : 241.8 kΩ • 50°C {122°F} : 106.2 $^{+74.3}_{-41.8}$ kΩ • 100°C {212°F} : 33.56 $^{+17.60}_{-10.60}$ kΩ • 150°C {302°F} : 13.90 $^{+5.36}_{-3.60}$ kΩ • 200°C {392°F} : 6.896 $^{+2.064}_{-1.252}$ kΩ
	Inspection result (Is the judging standard satisfied?)	YES	Go to step 3.
		NO	Go to step 4.

Step 3	Inspection items		Inspection of electronic control unit connector
	Maintenance item		Inspection of connector
	Inspection condition		–
	Requirements		• Connector is properly connected. • No trace of water entry is found. • No corrosion is found in terminal. • Connection to terminal is appropriate.
	Inspection result (Is the judging standard satisfied?)	YES	Go to step 8.
		NO	Modify connector.

Step 4	Inspection items		Inspection of sensor connector
	Maintenance item		Inspection of connector
	Inspection condition		–
	Requirements		• Connector is properly connected. • No trace of water entry is found. • No corrosion is found in terminal. • Connection to terminal is appropriate.
	Inspection result (Is the judging standard satisfied?)	YES	Go to step 5.
		NO	Modify connector.

Step 5	Inspection items		Inspection of catalytic temperature sensor unit
	Maintenance item		Measure value of resistance between connector terminal No. 1 and 2.
	Inspection condition		• Put catalytic temperature sensor in vessel filled with engine oil. • Heat the oil to each of the specified temperatures. Stir the oil well while doing so.
	Requirements		• 20°C {68°F} : 241.8 kΩ • 50°C {122°F} : 106.2 $^{+74.3}_{-41.8}$ kΩ • 100°C {212°F} : 33.56 $^{+17.60}_{-10.60}$ kΩ • 150°C {302°F} : 13.90 $^{+5.36}_{-3.60}$ kΩ • 200°C {392°F} : 6.896 $^{+2.064}_{-1.252}$ kΩ
	Inspection result (Is the judging standard satisfied?)	YES	Go to step 6.
		NO	Replacement of sensor

<Step 5 inspection diagram>

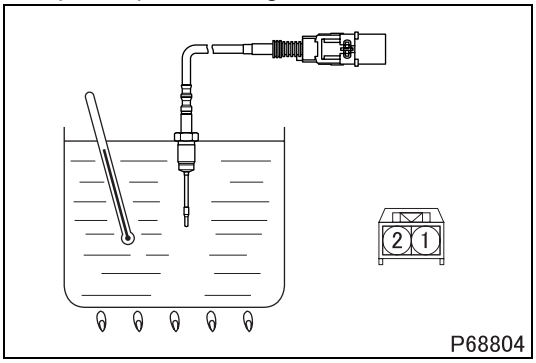

Step 6	Inspection items		Inspection of harness between electronic control unit and sensor (power supply)
	Maintenance item		Check circuit between electronic control unit connector (GF34A) terminal No. 20 and sensor connector terminal No. 1.
	Inspection condition		Disconnect each device from harness and measure from connection side of harness connector.
	Requirements		There is continuity.
	Inspection result (Is the judging standard satisfied?)	YES	Go to step 7.
		NO	Modify harness.

Step 7	Inspection items		Inspection of harness between electronic control unit and sensor (ground)
	Maintenance item		Check circuit between electronic control unit connector (GF35A) terminal No. 26 and sensor connector terminal No. 2.
	Inspection condition		Disconnect each device from harness and measure from connection side of harness connector.
	Requirements		There is continuity.
	Inspection result (Is the judging standard satisfied?)	YES	Go to step 8.
		NO	Modify harness.

Step 8	Inspection items		Inspection by control data
	Maintenance item		**<General Scanning Tool used>** • Measure item “OXI CAT Temperature”. **<Multi-Use Tester used>** • Measure item No. 58 “Exhaust Gas Temperature” of Service Data.
	Inspection condition		While engine is warmed up
	Requirements		Temperature gradually rises up.
	Inspection result (Is the judging standard satisfied?)	YES	Go to transient fault (See Gr00.).
		NO	Replacement of electronic control unit

[Fault code]
Diagnosis code: P0471/Flash code: 98
[Monitor]
Characteristic abnormality of DPF absolute pressure sensor
[Fault (outline)]
Gain and offset drift
[Diagnosis check]
- Outputs from atmospheric pressure sensor and DPF absolute pressure sensor are compared to each other to determine if sensor outputs are normal or not.

[Code generation condition]
- Pressure difference between atmospheric pressure sensor and DPF absolute pressure sensor is more than 14.5 kPa {2.1 psi, 0.1 kgf/cm^2} and that condition lasts for approx. 5 seconds.
  (Warning lamp is lit and diagnosis code is displayed on second establishment of code generation condition.)

[Diagnosis check timing]
- When code generation condition is established after starter switch ON

[Diagnostic requirement]
- 2 seconds passed after starter switch ON
- 2 seconds passed after cranking
- Battery voltage: normal
- Engine speed: less than 750 rpm
- Injection quantity: less than 20 mm^3/st
- Intake air temperature sensor 1: normal in output signal
- Boost temperature sensor: normal in output signal

[Control effected by electronic control unit during fault]
- Effects no special control.

[Probable cause of trouble]
- Open-circuit or short-circuit of harness between electronic control unit and DPF absolute pressure sensor
- Abnormality of each connector
- Abnormality of DPF absolute pressure sensor
- Abnormality in electronic control unit

[Recoverability]
<Control during fault>
- Recovered if signal becomes normal with starter switch in ON position.

<Warning lamp>
- Extinguished at 4th driving cycle after normal signal is input.

<Fault code>
- Automatically cleared at 40th warm up cycle after warning lamp is extinguished. (To clear as desired, erase from the memory.)

Driving cycle : “Starter switch ON to start engine till starter switch OFF” constitutes 1 driving cycle.
Warm up cycle : “Starter switch ON to start engine till starter switch OFF after coolant temperature increased and engine warmed up” constitutes 1 warm up cycle.

[Electronic Control Unit Connection Diagram]

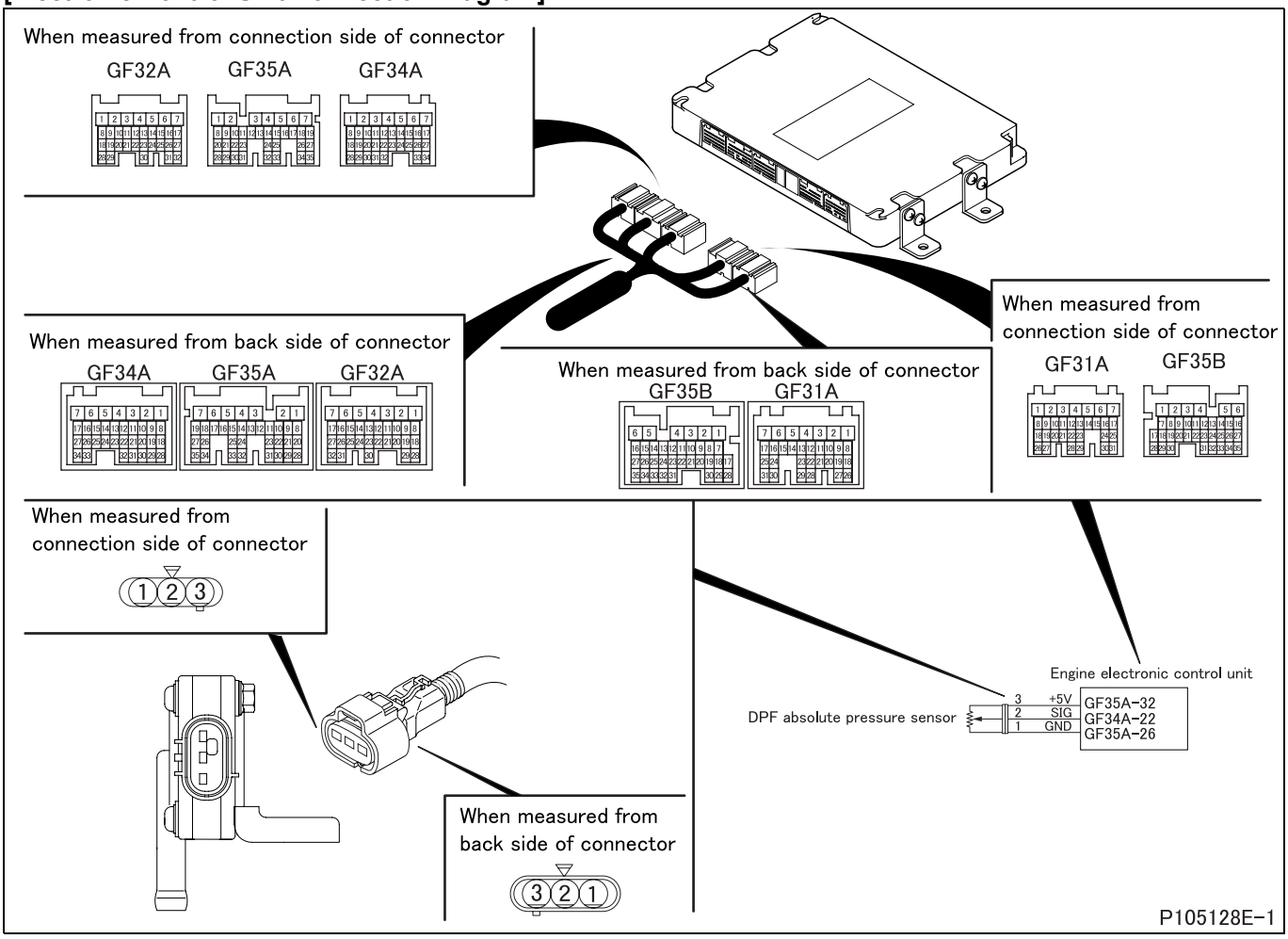

[Parts Identification and Location]

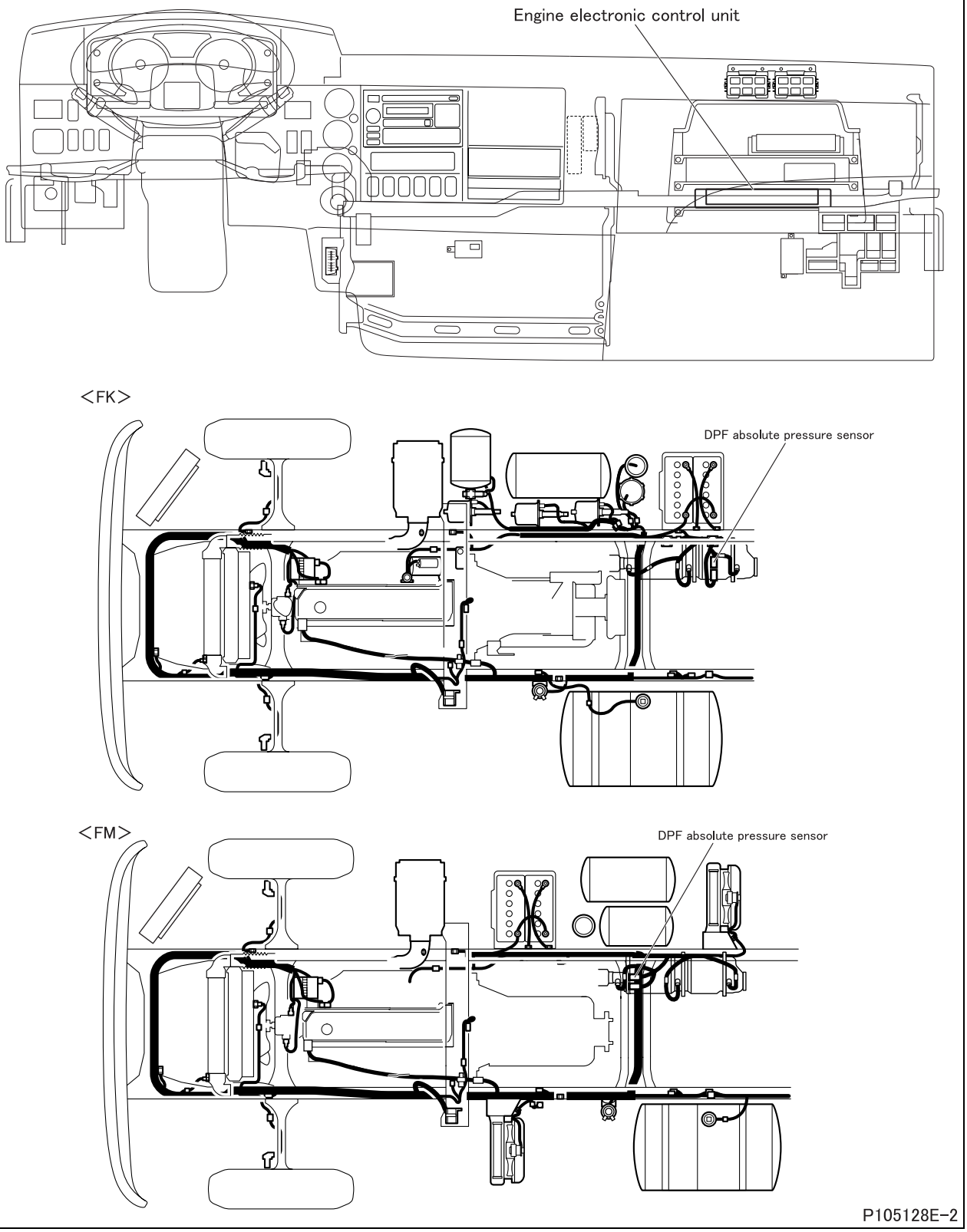

[Fault diagnosis]

- Perform checks in the sequence of the following steps.

Step 1	Inspection items		Inspection by control data
	Maintenance item		Check if following diagnosis codes occur simultaneously. • P2453 “DPF Diff SNSR (Plausi) & MFF” • P2454 “DPF Diff SNSR (Low) & MFF” • P2455 “DPF Diff SNSR (High) & MFF”
	Inspection condition		• Starter switch: ON • Engine: stopped
	Requirements		Codes occur.
	Inspection result (Is the judging standard satisfied?)	YES	Inspect diagnosis code that is occurring.
		NO	Go to step 2.

Step 2	Inspection items		Inspection by control data
	Maintenance item		Measure item No. 33 “Exhaust gas pressure” of Service Data.
	Inspection condition		–
	Requirements		0 kPa {0 psi, 0 kgf/cm^2}
	Inspection result (Is the judging standard satisfied?)	YES	Go to transient fault (See Gr00.).
		NO	Go to step 3.

Step 3	Inspection items		Inspection by electronic control unit connector (signal)
	Maintenance item		Measure value of voltage between connector (GF34A) terminal No. 22 (+) and (GF35A) terminal No. 26 (–).
	Inspection condition		• Starter switch: ON • Engine: stopped • Measure from back side of connector of harness with each device connected to harness.
	Requirements		1.875 to 4.5 V
	Inspection result (Is the judging standard satisfied?)	YES	Go to step 6.
		NO	Go to step 4.

Step 4	Inspection items		Inspection by electronic control unit connector (power supply)
	Maintenance item		Measure value of voltage between connector (GF35A) terminal No. 32 (+) and 26 (–).
	Inspection condition		• Starter switch: ON • Engine: stopped • Measure from back side of connector of harness with each device connected to harness.
	Requirements		5 V
	Inspection result (Is the judging standard satisfied?)	YES	Go to step 5.
		NO	Go to step 6.

Step 5	Inspection items		Inspection by electronic control unit connector (ground)
	Maintenance item		Measure value of voltage between connector (GF35A) terminal No. 26 (+) and (GF31A) terminal No. 3 (–).
	Inspection condition		• Starter switch: ON • Engine: stopped • Measure from back side of connector of harness with each device connected to harness.
	Requirements		0 V
	Inspection result (Is the judging standard satisfied?)	YES	Go to step 7.
		NO	Go to step 6.

Step 6	Inspection items		Inspection of electronic control unit connector
	Maintenance item		Inspection of connector
	Inspection condition		–
	Requirements		• Connector is properly connected. • No trace of water entry is found. • No corrosion is found in terminal. • Connection to terminal is appropriate.
	Inspection result (Is the judging standard satisfied?)	YES	Go to step 13.
		NO	Modify connector.

Step 7	Inspection items		Inspection of sensor connector
	Maintenance item		Inspection of connector
	Inspection condition		–
	Requirements		• Connector is properly connected. • No trace of water entry is found. • No corrosion is found in terminal. • Connection to terminal is appropriate.
	Inspection result (Is the judging standard satisfied?)	YES	Go to step 8.
		NO	Modify connector.

Step 8	Inspection items		Inspection of DPF absolute pressure sensor unit
	Maintenance item		Measure value of voltage between terminal No. 2 (+) and 1 (–).
	Inspection condition		• Apply voltage DC 5 V across connector terminals No. 3 (+) and 1 (–). • Gradually increase applied air pressure.
	Requirements		• –41 ± 3.2 kPa {–5.9 ± 0.5 psi, –0.43 ± 0.03 kgf/cm^2}: 1.875 V • 99 ± 3.2 kPa {14 ± 0.5 psi, 1.0 ± 0.03 kgf/cm^2}: 4.5 V
	Inspection result (Is the judging standard satisfied?)	YES	Go to step 9.
		NO	Replacement of sensor

<Step 8 inspection diagram>

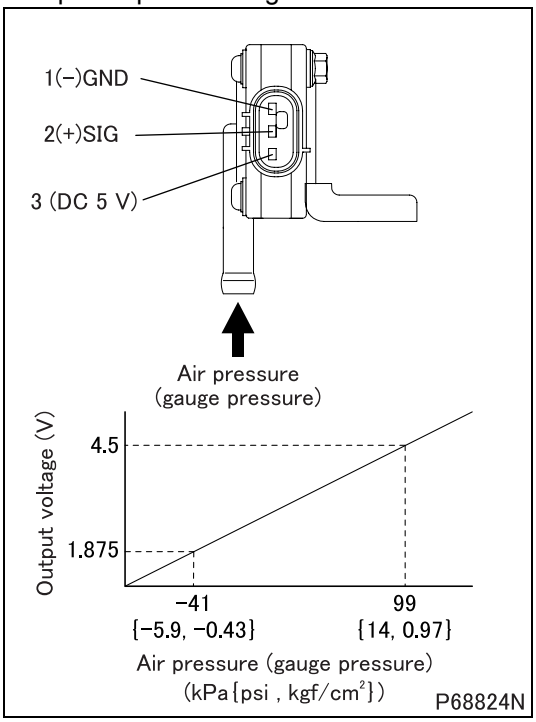

Step 9	Inspection items		Inspection by sensor connector
	Maintenance item		Measure value of voltage between terminal No. 3 (+) and 1 (–).
	Inspection condition		• Starter switch: ON • Engine: stopped • Measure from back side of connector of harness with each device connected to harness.
	Requirements		5 V
	Inspection result (Is the judging standard satisfied?)	YES	Go to step 11.
		NO	Go to step 10.

Step 10	Inspection items		Inspection of harness between electronic control unit and sensor (power supply)
	Maintenance item		Check circuit between electronic control unit connector (GF35A) terminal No. 32 and sensor connector terminal No. 3.
	Inspection condition		Disconnect each device from harness and measure from connection side of harness connector.
	Requirements		There is continuity.
	Inspection result (Is the judging standard satisfied?)	YES	Go to step 13.
		NO	Modify harness.

Step 11	Inspection items		Inspection of harness between electronic control unit and sensor (ground)
	Maintenance item		Check circuit between electronic control unit connector (GF35A) terminal No. 26 and sensor connector terminal No. 1.
	Inspection condition		Disconnect each device from harness and measure from connection side of harness connector.
	Requirements		There is continuity.
	Inspection result (Is the judging standard satisfied?)	YES	Go to step 12.
		NO	Modify harness.

Step 12	Inspection items		Inspection of harness between electronic control unit and sensor (signal)
	Maintenance item		Check circuit between electronic control unit connector (GF34A) terminal No. 22 and sensor connector terminal No. 2.
	Inspection condition		Disconnect each device from harness and measure from connection side of harness connector.
	Requirements		There is continuity.
	Inspection result (Is the judging standard satisfied?)	YES	Go to step 13.
		NO	Modify harness.

Step 13	Inspection items		Inspection by control data
	Maintenance item		Measure item No. 33 “Exhaust gas pressure” of Service Data.
	Inspection condition		–
	Requirements		0 kPa {0 psi, 0 kgf/cm^2}
	Inspection result (Is the judging standard satisfied?)	YES	Go to transient fault (See Gr00.).
		NO	Replacement of electronic control unit

[Fault code]
Diagnosis code: P0472/Flash code: 98
[Monitor]
Abnormality of DPF absolute pressure sensor
[Fault (outline)]
Low signal range check
[Diagnosis check]
- Output voltage of DPF absolute pressure sensor is monitored.

[Code generation condition]
- Voltage of DPF absolute pressure sensor remains under 0.2 V for approx. 2.5 seconds.
  (Warning lamp is lit and diagnosis code is displayed on first establishment of code generation condition.)

[Diagnosis check timing]
- When code generation condition is established after starter switch ON

[Diagnostic requirement]
- 2 seconds passed after starter switch ON
- 2 seconds passed after cranking
- Battery voltage: normal

[Control effected by electronic control unit during fault]
- Injection quantity is limited.
- Exhaust gas recirculation control is stopped.
- Throttle control is stopped.
- Diesel particulate filter regeneration (manual or automatic) is stopped.
- Control is carried out using backup value (101.3 kPa).

[Probable cause of trouble]
- Open-circuit or short-circuit of harness between electronic control unit and DPF absolute pressure sensor
- Abnormality of each connector
- Abnormality of DPF absolute pressure sensor
- Abnormality in electronic control unit

[Recoverability]
<Control during fault>
- Recovered if signal becomes normal with starter switch in ON position.

<Warning lamp>
- Extinguished at 4th driving cycle after normal signal is input.

<Fault code>
- Automatically cleared at 40th warm up cycle after warning lamp is extinguished. (To clear as desired, erase from the memory.)

Driving cycle : “Starter switch ON to start engine till starter switch OFF” constitutes 1 driving cycle.
Warm up cycle : “Starter switch ON to start engine till starter switch OFF after coolant temperature increased and engine warmed up” constitutes 1 warm up cycle.

[Electronic Control Unit Connection Diagram]

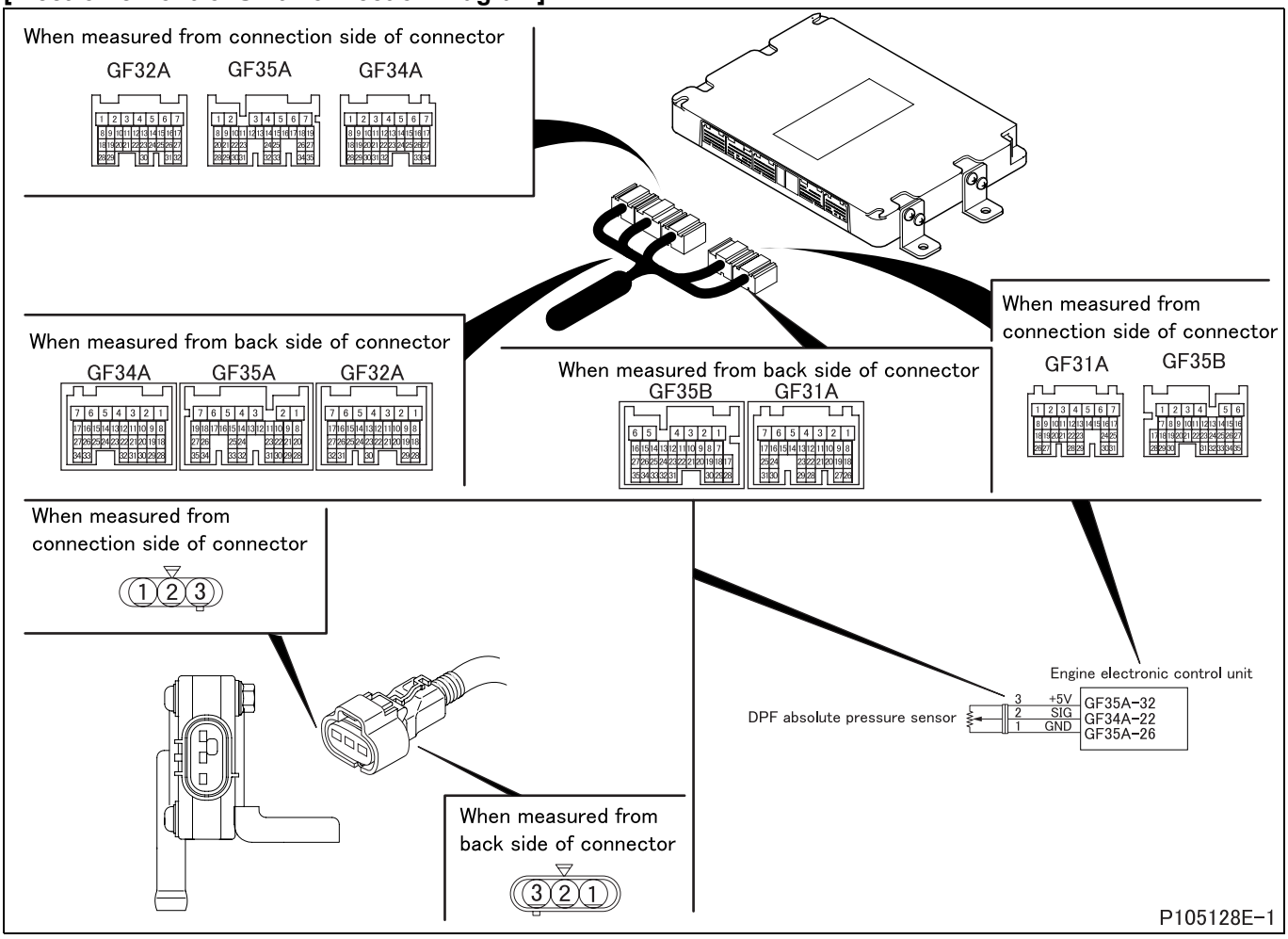

[Parts Identification and Location]

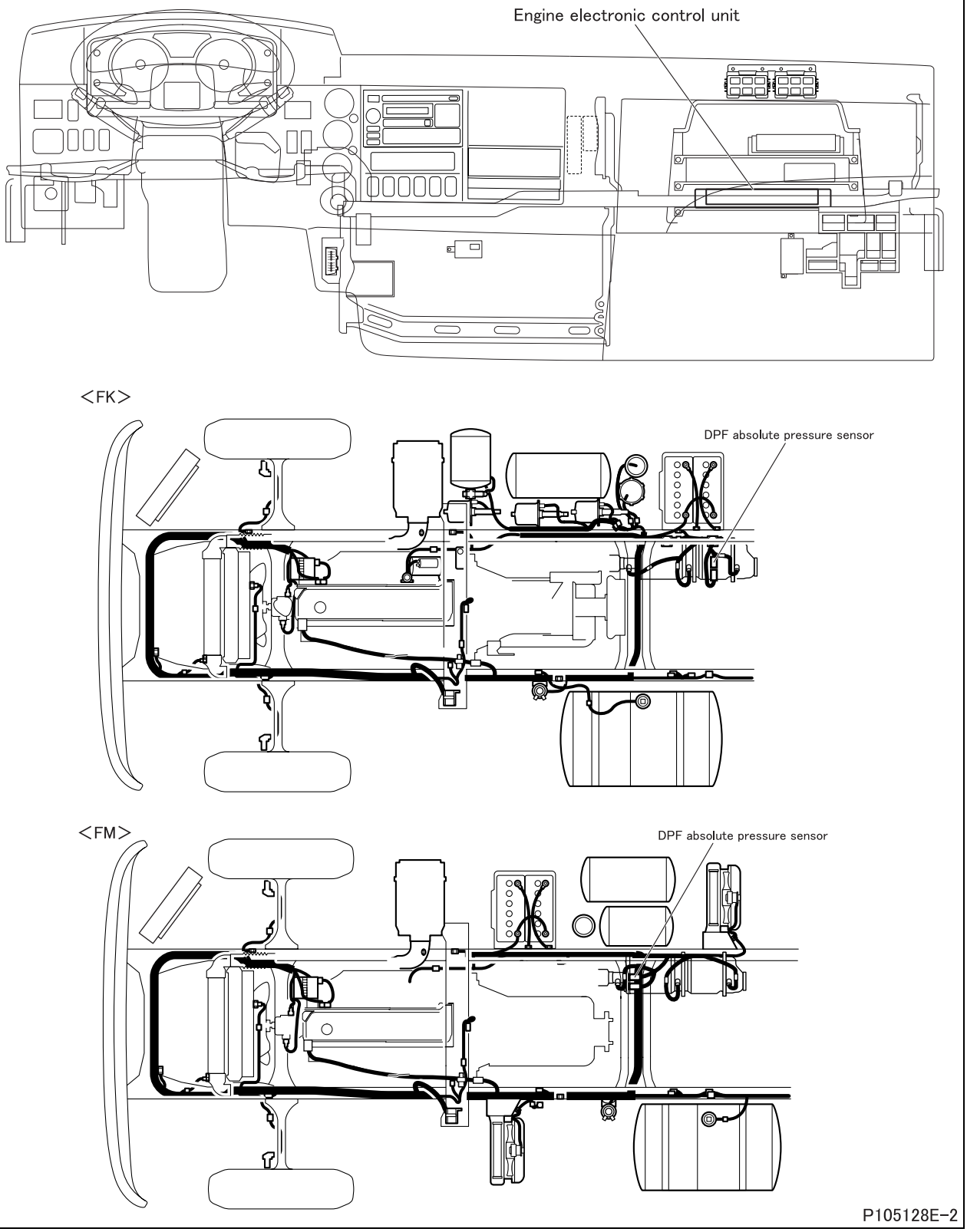

[Fault diagnosis]

- Perform checks in the sequence of the following steps.

Step 1	Inspection items		Inspection by control data
	Maintenance item		Check if following diagnosis codes occur simultaneously. • P2453 “DPF Diff SNSR (Plausi) & MFF” • P2454 “DPF Diff SNSR (Low) & MFF” • P2455 “DPF Diff SNSR (High) & MFF”
	Inspection condition		• Starter switch: ON • Engine: stopped
	Requirements		Codes occur.
	Inspection result (Is the judging standard satisfied?)	YES	Inspect diagnosis code that is occurring.
		NO	Go to step 2.

Step 2	Inspection items		Inspection by control data
	Maintenance item		Measure item No. 33 “Exhaust gas pressure” of Service Data.
	Inspection condition		–
	Requirements		0 kPa {0 psi, 0 kgf/cm^2}
	Inspection result (Is the judging standard satisfied?)	YES	Go to transient fault (See Gr00.).
		NO	Go to step 3.

Step 3	Inspection items		Inspection by electronic control unit connector (signal)
	Maintenance item		Measure value of voltage between connector (GF34A) terminal No. 22 (+) and (GF35A) terminal No. 26 (–).
	Inspection condition		• Starter switch: ON • Engine: stopped • Measure from back side of connector of harness with each device connected to harness.
	Requirements		1.875 to 4.5 V
	Inspection result (Is the judging standard satisfied?)	YES	Go to step 6.
		NO	Go to step 4.

Step 4	Inspection items		Inspection by electronic control unit connector (power supply)
	Maintenance item		Measure value of voltage between connector (GF35A) terminal No. 32 (+) and 26 (–).
	Inspection condition		• Starter switch: ON • Engine: stopped • Measure from back side of connector of harness with each device connected to harness.
	Requirements		5 V
	Inspection result (Is the judging standard satisfied?)	YES	Go to step 5.
		NO	Go to step 6.

Step 5	Inspection items		Inspection by electronic control unit connector (ground)
	Maintenance item		Measure value of voltage between connector (GF35A) terminal No. 26 (+) and (GF31A) terminal No. 3 (–).
	Inspection condition		• Starter switch: ON • Engine: stopped • Measure from back side of connector of harness with each device connected to harness.
	Requirements		0 V
	Inspection result (Is the judging standard satisfied?)	YES	Go to step 7.
		NO	Go to step 6.

Step 6	Inspection items		Inspection of electronic control unit connector
	Maintenance item		Inspection of connector
	Inspection condition		–
	Requirements		• Connector is properly connected. • No trace of water entry is found. • No corrosion is found in terminal. • Connection to terminal is appropriate.
	Inspection result (Is the judging standard satisfied?)	YES	Go to step 13.
		NO	Modify connector.

Step 7	Inspection items		Inspection of sensor connector
	Maintenance item		Inspection of connector
	Inspection condition		–
	Requirements		• Connector is properly connected. • No trace of water entry is found. • No corrosion is found in terminal. • Connection to terminal is appropriate.
	Inspection result (Is the judging standard satisfied?)	YES	Go to step 8.
		NO	Modify connector.

Step 8	Inspection items		Inspection of DPF absolute pressure sensor unit
	Maintenance item		Measure value of voltage between terminal No. 2 (+) and 1 (–).
	Inspection condition		• Apply voltage DC 5 V across connector terminals No. 3 (+) and 1 (–). • Gradually increase applied air pressure.
	Requirements		• –41 ± 3.2 kPa {–5.9 ± 0.5 psi, –0.43 ± 0.03 kgf/cm^2}: 1.875 V • 99 ± 3.2 kPa {14 ± 0.5 psi, 1.0 ± 0.03 kgf/cm^2}: 4.5 V
	Inspection result (Is the judging standard satisfied?)	YES	Go to step 9.
		NO	Replacement of sensor

<Step 8 inspection diagram>

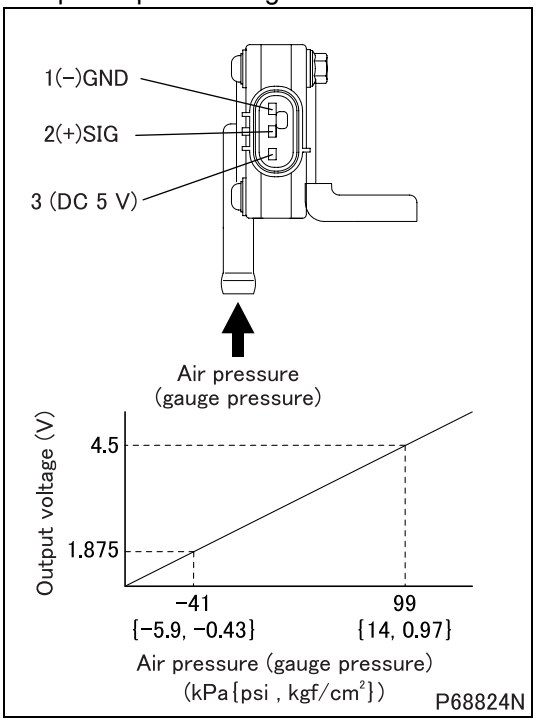

Step 9	Inspection items		Inspection by sensor connector
	Maintenance item		Measure value of voltage between terminal No. 3 (+) and 1 (–)
	Inspection condition		• Starter switch: ON • Engine: stopped • Measure from back side of connector of harness with each device connected to harness.
	Requirements		5 V
	Inspection result (Is the judging standard satisfied?)	YES	Go to step 11.
		NO	Go to step 10.

Step 10	Inspection items		Inspection of harness between electronic control unit and sensor (power supply)
	Maintenance item		Check circuit between electronic control unit connector (GF35A) terminal No. 32 and sensor connector terminal No. 3.
	Inspection condition		Disconnect each device from harness and measure from connection side of harness connector.
	Requirements		There is continuity.
	Inspection result (Is the judging standard satisfied?)	YES	Go to step 13.
		NO	Modify harness.

Step 11	Inspection items		Inspection of harness between electronic control unit and sensor (ground)
	Maintenance item		Check circuit between electronic control unit connector (GF35A) terminal No. 26 and sensor connector terminal No. 1.
	Inspection condition		Disconnect each device from harness and measure from connection side of harness connector.
	Requirements		There is continuity.
	Inspection result (Is the judging standard satisfied?)	YES	Go to step 12.
		NO	Modify harness.

Step 12	Inspection items		Inspection of harness between electronic control unit and sensor (signal)
	Maintenance item		Check circuit between electronic control unit connector (GF34A) terminal No. 22 and sensor connector terminal No. 2.
	Inspection condition		Disconnect each device from harness and measure from connection side of harness connector.
	Requirements		There is continuity.
	Inspection result (Is the judging standard satisfied?)	YES	Go to step 13.
		NO	Modify harness.

Step 13	Inspection items		Inspection by control data
	Maintenance item		Measure item No. 33 “Exhaust gas pressure” of Service Data.
	Inspection condition		–
	Requirements		0 kPa {0 psi, 0 kgf/cm^2}
	Inspection result (Is the judging standard satisfied?)	YES	Go to transient fault (See Gr00.).
		NO	Replacement of electronic control unit

[Fault code]
Diagnosis code: P0473/Flash code: 98
[Monitor]
Abnormality of DPF absolute pressure sensor
[Fault (outline)]
High signal range check
[Diagnosis check]
- Output voltage of DPF absolute pressure sensor is monitored.

[Code generation condition]
- Voltage of DPF absolute pressure sensor remains over 4.8 V for approx. 2.5 seconds.
  (Warning lamp is lit and diagnosis code is displayed on first establishment of code generation condition.)

[Diagnosis check timing]
- When code generation condition is established after starter switch ON

[Diagnostic requirement]
- 2 seconds passed after starter switch ON
- 2 seconds passed after cranking
- Battery voltage: normal

[Control effected by electronic control unit during fault]
- Injection quantity is limited.
- Exhaust gas recirculation control is stopped.
- Throttle control is stopped.
- Diesel particulate filter regeneration (manual or automatic) is stopped.
- Control is carried out using backup value (101.3 kPa).

[Probable cause of trouble]
- Open-circuit or short-circuit of harness between electronic control unit and DPF absolute pressure sensor
- Abnormality of each connector
- Abnormality of DPF absolute pressure sensor
- Abnormality in electronic control unit

[Recoverability]
<Control during fault>
- Recovered if signal becomes normal with starter switch in ON position.

<Warning lamp>
- Extinguished at 4th driving cycle after normal signal is input.

<Fault code>
- Automatically cleared at 40th warm up cycle after warning lamp is extinguished. (To clear as desired, erase from the memory.)

Driving cycle : “Starter switch ON to start engine till starter switch OFF” constitutes 1 driving cycle.
Warm up cycle : “Starter switch ON to start engine till starter switch OFF after coolant temperature increased and engine warmed up” constitutes 1 warm up cycle.

[Electronic Control Unit Connection Diagram]

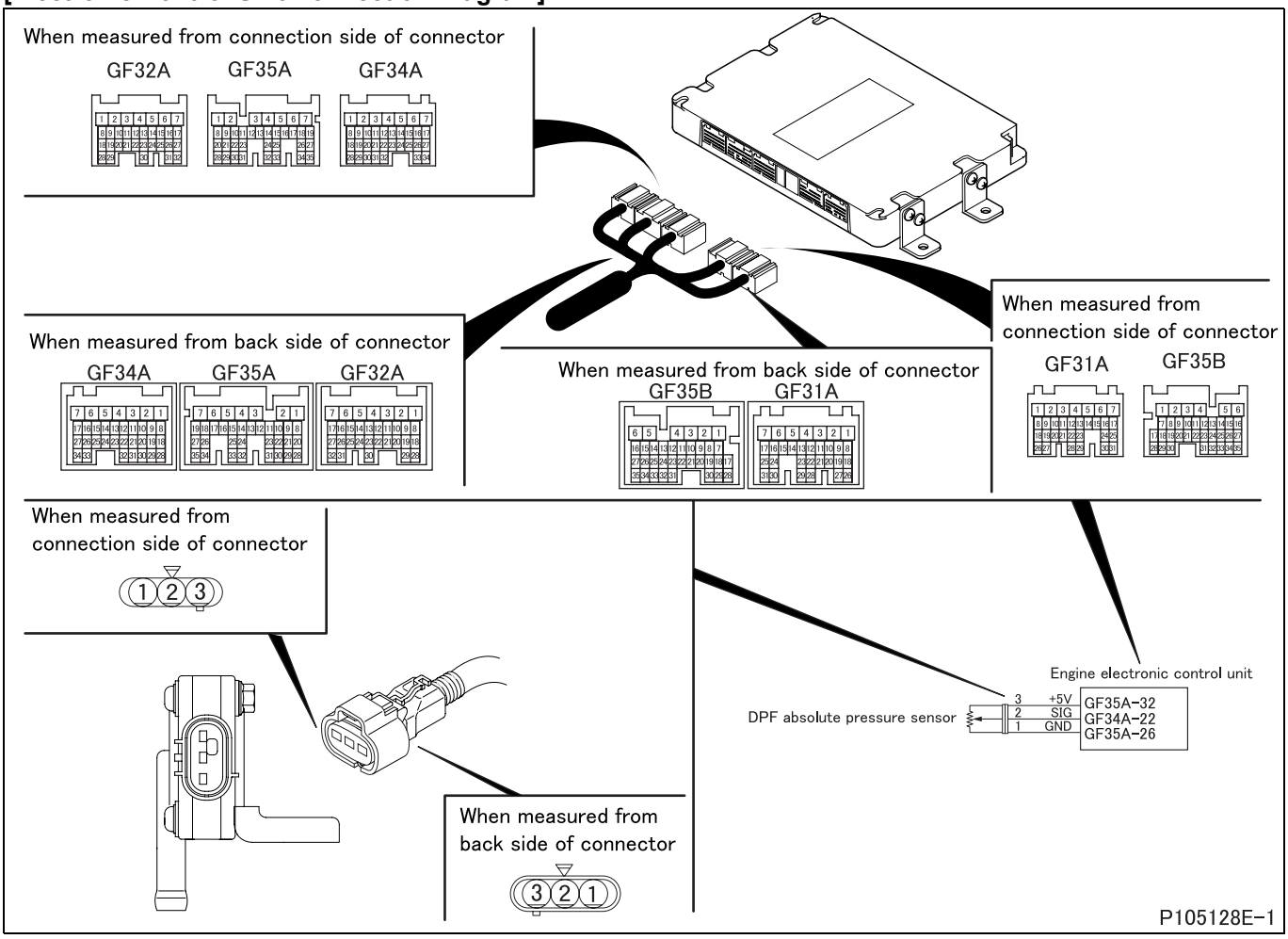

[Parts Identification and Location]

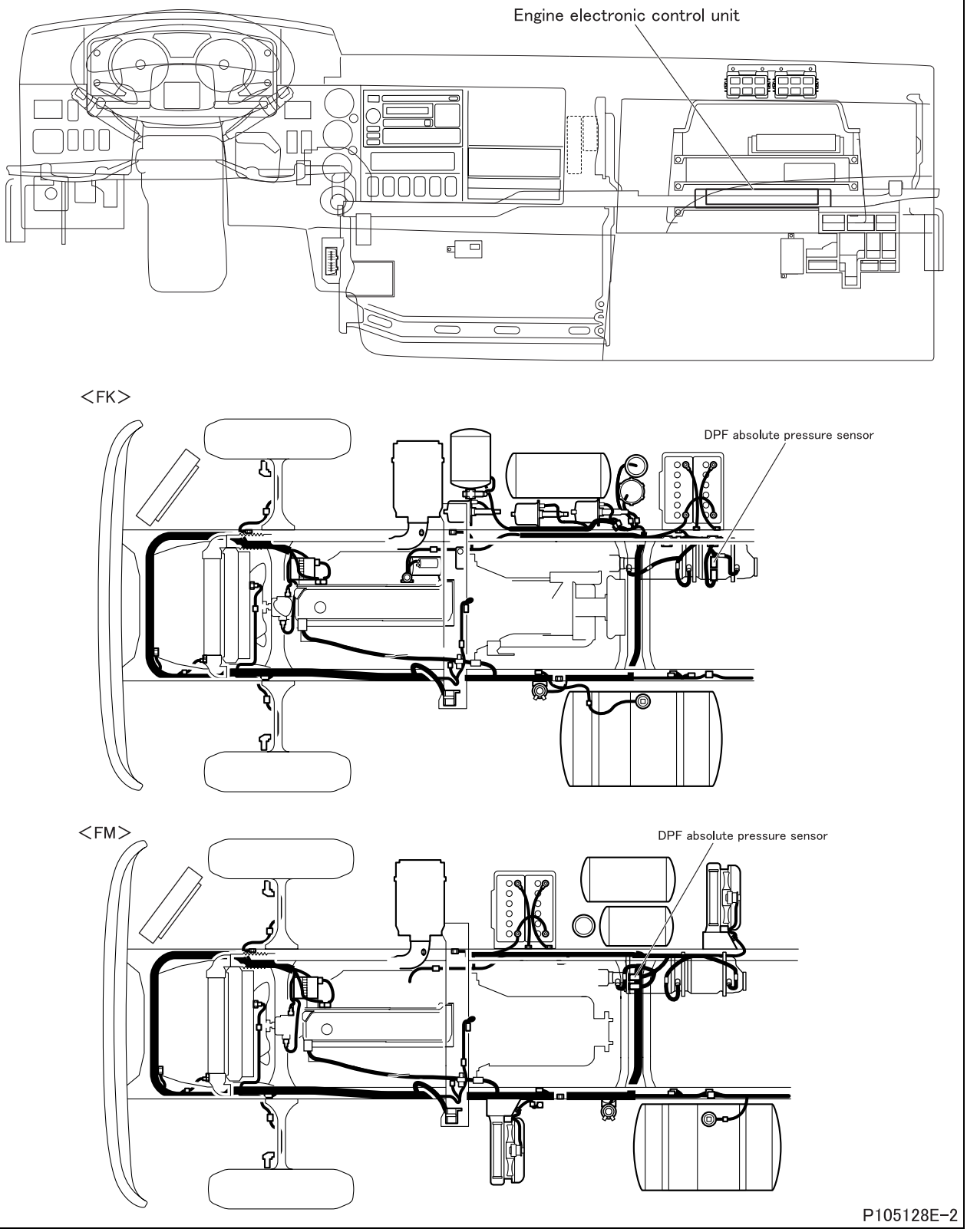

[Fault diagnosis]

- Perform checks in the sequence of the following steps.

Step 1	Inspection items		Inspection by control data
	Maintenance item		Check if following diagnosis codes occur simultaneously. • P2453 “DPF Diff SNSR (Plausi) & MFF” • P2454 “DPF Diff SNSR (Low) & MFF” • P2455 “DPF Diff SNSR (High) & MFF”
	Inspection condition		• Starter switch: ON • Engine: stopped
	Requirements		Codes occur.
	Inspection result (Is the judging standard satisfied?)	YES	Inspect diagnosis code that is occurring.
		NO	Go to step 2.

Step 2	Inspection items		Inspection by control data
	Maintenance item		Measure item No. 33 “Exhaust gas pressure” of Service Data.
	Inspection condition		–
	Requirements		0 kPa {0 psi, 0 kgf/cm^2}
	Inspection result (Is the judging standard satisfied?)	YES	Go to transient fault (See Gr00.).
		NO	Go to step 3.

Step 3	Inspection items		Inspection by electronic control unit connector (signal)
	Maintenance item		Measure value of voltage between connector (GF34A) terminal No. 22 (+) and (GF35A) terminal No. 26 (–).
	Inspection condition		• Starter switch: ON • Engine: stopped • Measure from back side of connector of harness with each device connected to harness.
	Requirements		1.875 to 4.5 V
	Inspection result (Is the judging standard satisfied?)	YES	Go to step 6.
		NO	Go to step 4.

Step 4	Inspection items		Inspection by electronic control unit connector (power supply)
	Maintenance item		Measure value of voltage between connector (GF35A) terminal No. 32 (+) and 26 (–).
	Inspection condition		• Starter switch: ON • Engine: stopped • Measure from back side of connector of harness with each device connected to harness.
	Requirements		5 V
	Inspection result (Is the judging standard satisfied?)	YES	Go to step 5.
		NO	Go to step 6.

Step 5	Inspection items		Inspection by electronic control unit connector (ground)
	Maintenance item		Measure value of voltage between connector (GF35A) terminal No. 26 (+) and (GF31A) terminal No. 3 (–).
	Inspection condition		• Starter switch: ON • Engine: stopped • Measure from back side of connector of harness with each device connected to harness.
	Requirements		0 V
	Inspection result (Is the judging standard satisfied?)	YES	Go to step 7.
		NO	Go to step 6.

Step 6	Inspection items		Inspection of electronic control unit connector
	Maintenance item		Inspection of connector
	Inspection condition		–
	Requirements		• Connector is properly connected. • No trace of water entry is found. • No corrosion is found in terminal. • Connection to terminal is appropriate.
	Inspection result (Is the judging standard satisfied?)	YES	Go to step 13.
		NO	Modify connector.

Step 7	Inspection items		Inspection of sensor connector
	Maintenance item		Inspection of connector
	Inspection condition		–
	Requirements		• Connector is properly connected. • No trace of water entry is found. • No corrosion is found in terminal. • Connection to terminal is appropriate.
	Inspection result (Is the judging standard satisfied?)	YES	Go to step 8.
		NO	Modify connector.

Step 8	Inspection items		Inspection of DPF absolute pressure sensor unit
	Maintenance item		Measure value of voltage between terminal No. 2 (+) and 1 (–).
	Inspection condition		• Apply voltage DC 5 V across connector terminals No. 3 (+) and 1 (–). • Gradually increase applied air pressure.
	Requirements		• –41 ± 3.2 kPa {–5.9 ± 0.5 psi, –0.43 ± 0.03 kgf/cm^2}: 1.875 V • 99 ± 3.2 kPa {14 ± 0.5 psi, 1.0 ± 0.03 kgf/cm^2}: 4.5 V
	Inspection result (Is the judging standard satisfied?)	YES	Go to step 9.
		NO	Replacement of sensor

<Step 8 inspection diagram>

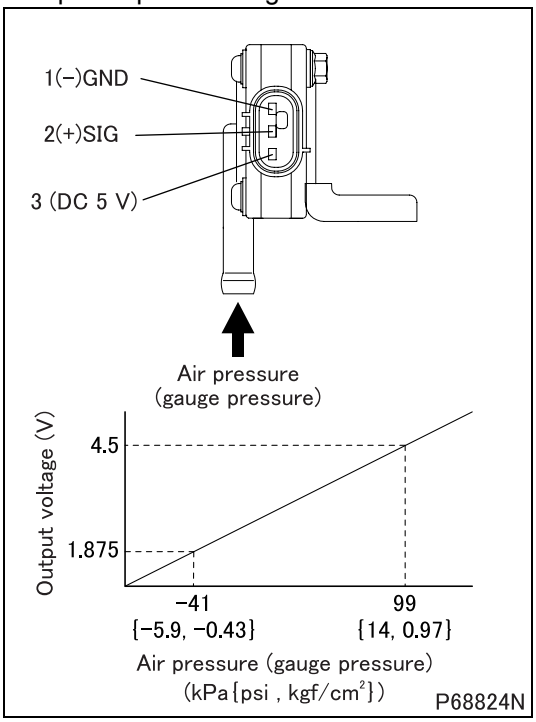

Step 9	Inspection items		Inspection by sensor connector
	Maintenance item		Measure value of voltage between terminal No. 3 (+) and 1 (–)
	Inspection condition		• Starter switch: ON • Engine: stopped • Measure from back side of connector of harness with each device connected to harness.
	Requirements		5 V
	Inspection result (Is the judging standard satisfied?)	YES	Go to step 11.
		NO	Go to step 10.

Step 10	Inspection items		Inspection of harness between electronic control unit and sensor (power supply)
	Maintenance item		Check circuit between electronic control unit connector (GF35A) terminal No. 32 and sensor connector terminal No. 3.
	Inspection condition		Disconnect each device from harness and measure from connection side of harness connector.
	Requirements		There is continuity.
	Inspection result (Is the judging standard satisfied?)	YES	Go to step 13.
		NO	Modify harness.

Step 11	Inspection items		Inspection of harness between electronic control unit and sensor (ground)
	Maintenance item		Check circuit between electronic control unit connector (GF35A) terminal No. 26 and sensor connector terminal No. 1.
	Inspection condition		Disconnect each device from harness and measure from connection side of harness connector.
	Requirements		There is continuity.
	Inspection result (Is the judging standard satisfied?)	YES	Go to step 12.
		NO	Modify harness.

Step 12	Inspection items		Inspection of harness between electronic control unit and sensor (signal)
	Maintenance item		Check circuit between electronic control unit connector (GF34A) terminal No. 22 and sensor connector terminal No. 2.
	Inspection condition		Disconnect each device from harness and measure from connection side of harness connector.
	Requirements		There is continuity.
	Inspection result (Is the judging standard satisfied?)	YES	Go to step 13.
		NO	Modify harness.

Step 13	Inspection items		Inspection by control data
	Maintenance item		Measure item No. 33 “Exhaust gas pressure” of Service Data.
	Inspection condition		–
	Requirements		0 kPa {0 psi, 0 kgf/cm^2}
	Inspection result (Is the judging standard satisfied?)	YES	Go to transient fault (See Gr00.).
		NO	Replacement of electronic control unit

[Fault code]
Diagnosis code: P0477/Flash code: 94
[Monitor]
Abnormality of exhaust shutter 3-way magnetic valve 2
[Fault (outline)]
- Short circuit ground
- Open circuit

[Diagnosis check]
- Exhaust shutter 3-way magnetic valve 2 circuit is monitored for fault.

[Code generation condition]
- Exhaust shutter 3-way magnetic valve 2 circuit remains shorted to ground or open as detected for approx. 1 second. (Warning lamp is lit and diagnosis code is displayed on first establishment of code generation condition.)

[Diagnosis check timing]
- When code generation condition is established after starter switch ON

[Diagnostic requirement]
- 2 seconds passed after starter switch ON
- 2 seconds passed after cranking
- Battery voltage: normal
- Exhaust shutter 3-way magnetic valve 2: inactive

[Control effected by electronic control unit during fault]
- Injection quantity is limited.
- Exhaust gas recirculation control is stopped.
- Throttle control is stopped.
- Diesel particulate filter regeneration (manual or automatic) is stopped.

[Probable cause of trouble]
- Short-circuit of harness between electronic control unit and exhaust shutter 3-way magnetic valve 2
- Abnormality of each connector
- Abnormality of exhaust shutter 3-way magnetic valve 2
- Abnormality in electronic control unit

[Recoverability]
<Control during fault>
- Recovered if signal becomes normal with starter switch in ON position.

<Warning lamp>
- Extinguished at 4th driving cycle after normal signal is input.

<Fault code>
- Automatically cleared at 40th warm up cycle after warning lamp is extinguished. (To clear as desired, erase from the memory.)

Driving cycle : “Starter switch ON to start engine till starter switch OFF” constitutes 1 driving cycle.
Warm up cycle : “Starter switch ON to start engine till starter switch OFF after coolant temperature increased and engine warmed up” constitutes 1 warm up cycle.

[Electronic Control Unit Connection Diagram]

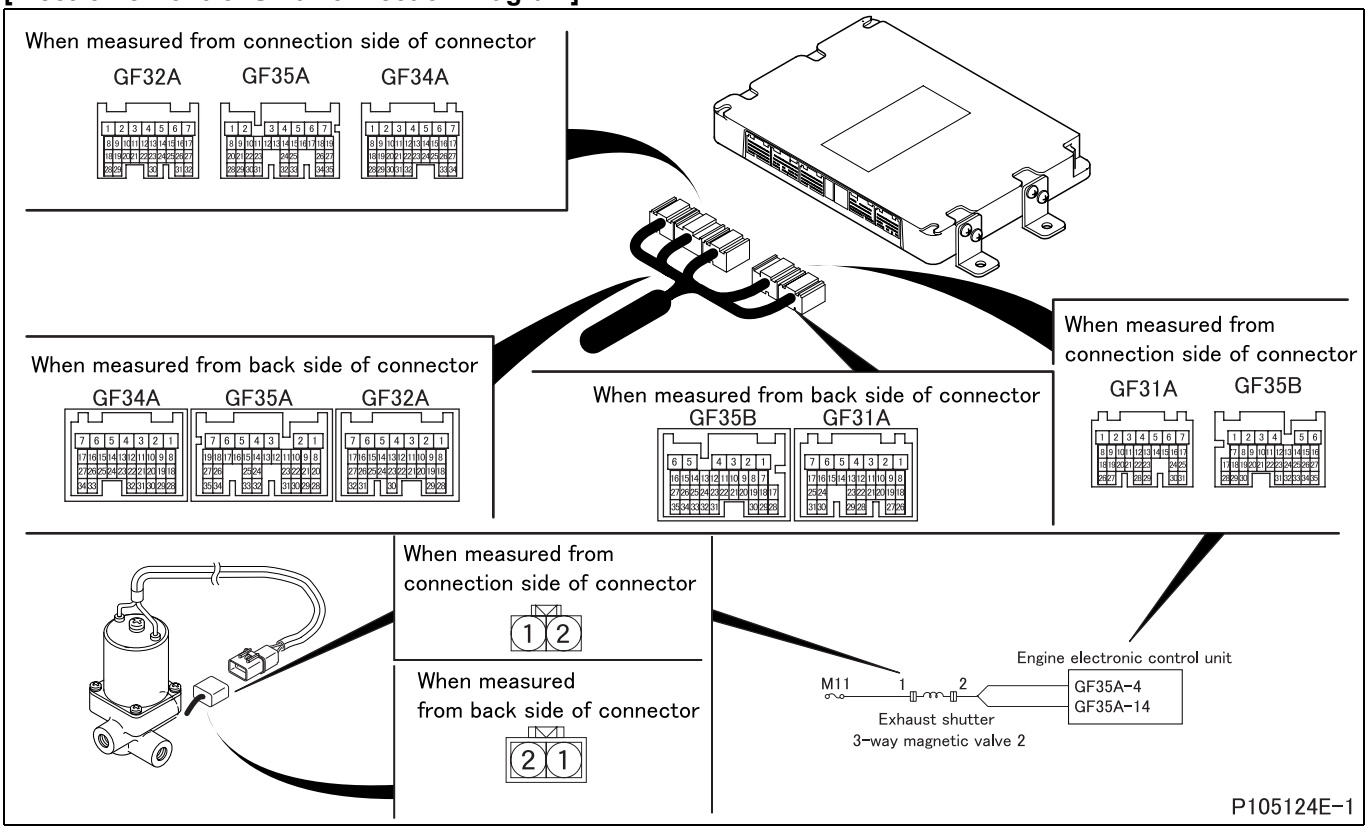

[Parts Identification and Location]

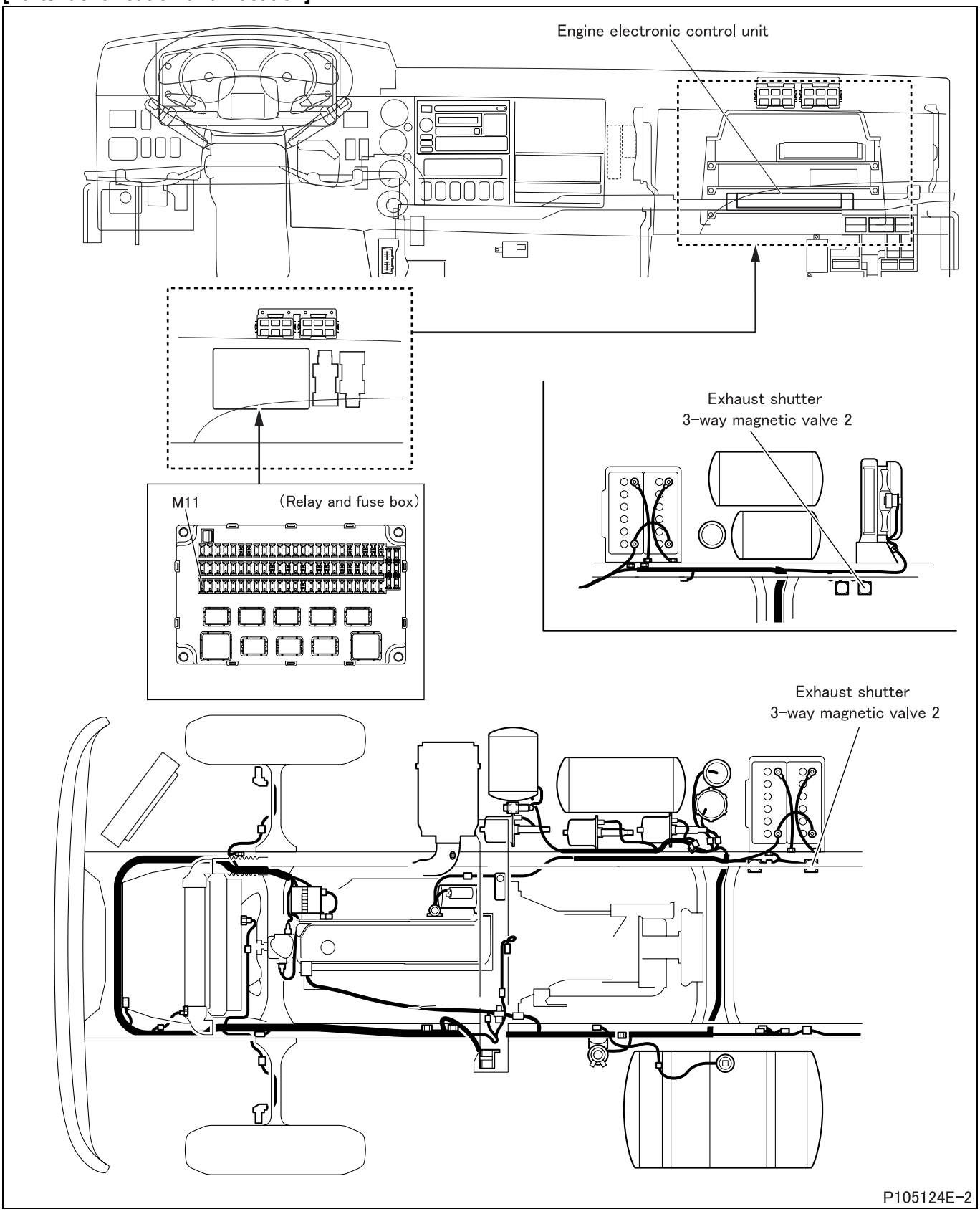

[Fault diagnosis]

- Perform checks in the sequence of the following steps.

Step 1	Inspection items		Inspection by control data
	Maintenance item		Perform actuator test item No. AB “Exhaust Brake M/V1 + M/V2”.
	Inspection condition		Starter switch: ON
	Requirements		3-way magnetic valve operation sound is noted (automatically reset after 6 seconds), or ON/OFF switching of Service Data: item No. 88 “Exhaust M/V” is effected.
	Inspection result (Is the judging standard satisfied?)	YES	Go to transient fault (See Gr00.).
		NO	Go to step 2.

Step 2	Inspection items		Inspection of electronic control unit connector
	Maintenance item		Inspection of connector
	Inspection condition		–
	Requirements		• Connector is properly connected. • No trace of water entry is found. • No corrosion is found in terminal. • Connection to terminal is appropriate.
	Inspection result (Is the judging standard satisfied?)	YES	Go to step 3.
		NO	Modify connector.

Step 3	Inspection items		Inspection of 3-way magnetic valve connector
	Maintenance item		Inspection of connector
	Inspection condition		–
	Requirements		• Connector is properly connected. • No trace of water entry is found. • No corrosion is found in terminal. • Connection to terminal is appropriate.
	Inspection result (Is the judging standard satisfied?)	YES	Go to step 4.
		NO	Modify connector.

Step 4	Inspection items		Inspection of 3-way magnetic valve unit
	Maintenance item		Measure minimum operating voltage when 3-way magnetic valve operates (judge by operation sound).
	Inspection condition		Gradually increase from zero the voltage applied to terminals No. 1 (+) and 2 (–).
	Requirements		10 V or less
	Inspection result (Is the judging standard satisfied?)	YES	Go to step 5.
		NO	Replacement of 3-way magnetic valve

<Step 4 inspection diagram>

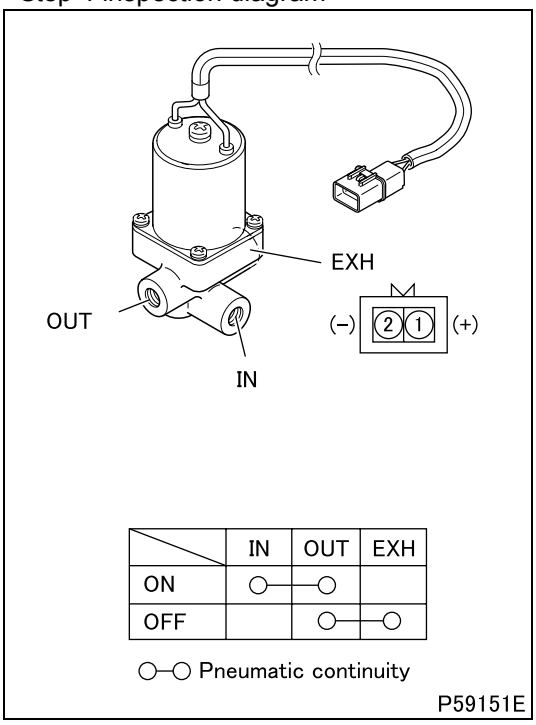

Step 5	Inspection items		Inspection of harness between 3-way magnetic valve and electronic control unit (ground)
	Maintenance item		Check circuit between 3-way magnetic valve connector terminal No. 2 and electronic control unit connector (GF35A) terminal No. 4 or 14.
	Inspection condition		Disconnect electronic control unit from harness and measure from connection side of harness connector.
	Requirements		There is continuity.
	Inspection result (Is the judging standard satisfied?)	YES	Go to step 6.
		NO	Modify harness.

Step 6	Inspection items		Inspection of harness between 3-way magnetic valve and fuse (power supply)
	Maintenance item		Check circuit between 3-way magnetic valve connector terminal No. 1 and fuse (M11).
	Inspection condition		Disconnect electronic control unit from harness and measure from connection side of harness connector.
	Requirements		There is continuity.
	Inspection result (Is the judging standard satisfied?)	YES	Go to step 7.
		NO	Modify harness.

Step 7	Inspection items		Inspection by control data
	Maintenance item		Perform actuator test item No. AB “Exhaust Brake M/V1 + M/V2”
	Inspection condition		Starter switch: ON
	Requirements		3-way magnetic valve operation sound is noted (automatically reset after 6 seconds), or ON/OFF switching of Service Data: item No. 88 “Exhaust M/V” is effected.
	Inspection result (Is the judging standard satisfied?)	YES	Go to transient fault (See Gr00.).
		NO	Replacement of electronic control unit

[Fault code]
Diagnosis code: P0478/Flash code: 94
[Monitor]
Abnormality of exhaust shutter 3-way magnetic valve 2
[Fault (outline)]
Short circuit battery
[Diagnosis check]
- Exhaust shutter 3-way magnetic valve 2 circuit is monitored for fault.

[Code generation condition]
- Exhaust shutter 3-way magnetic valve 2 circuit remains shorted to battery as detected for approx. 1 second. (Warning lamp is lit and diagnosis code is displayed on first establishment of code generation condition.)

[Diagnosis check timing]
- When code generation condition is established after starter switch ON

[Diagnostic requirement]
- 2 seconds passed after starter switch ON
- 2 seconds passed after cranking
- Battery voltage: normal
- Exhaust shutter 3-way magnetic valve 2: active

[Control effected by electronic control unit during fault]
- Injection quantity is limited.
- Exhaust gas recirculation control is stopped.
- Throttle control is stopped.
- Diesel particulate filter regeneration (manual or automatic) is stopped.

[Probable cause of trouble]
- Short-circuit of harness between electronic control unit and exhaust shutter 3-way magnetic valve 2
- Abnormality of each connector
- Abnormality of exhaust shutter 3-way magnetic valve 2
- Abnormality in electronic control unit

[Recoverability]
<Control during fault>
- Recovered if signal becomes normal with starter switch in ON position.

<Warning lamp>
- Extinguished at 4th driving cycle after normal signal is input.

<Fault code>
- Automatically cleared at 40th warm up cycle after warning lamp is extinguished. (To clear as desired, erase from the memory.)

Driving cycle : “Starter switch ON to start engine till starter switch OFF” constitutes 1 driving cycle.
Warm up cycle : “Starter switch ON to start engine till starter switch OFF after coolant temperature increased and engine warmed up” constitutes 1 warm up cycle.

[Electronic Control Unit Connection Diagram]

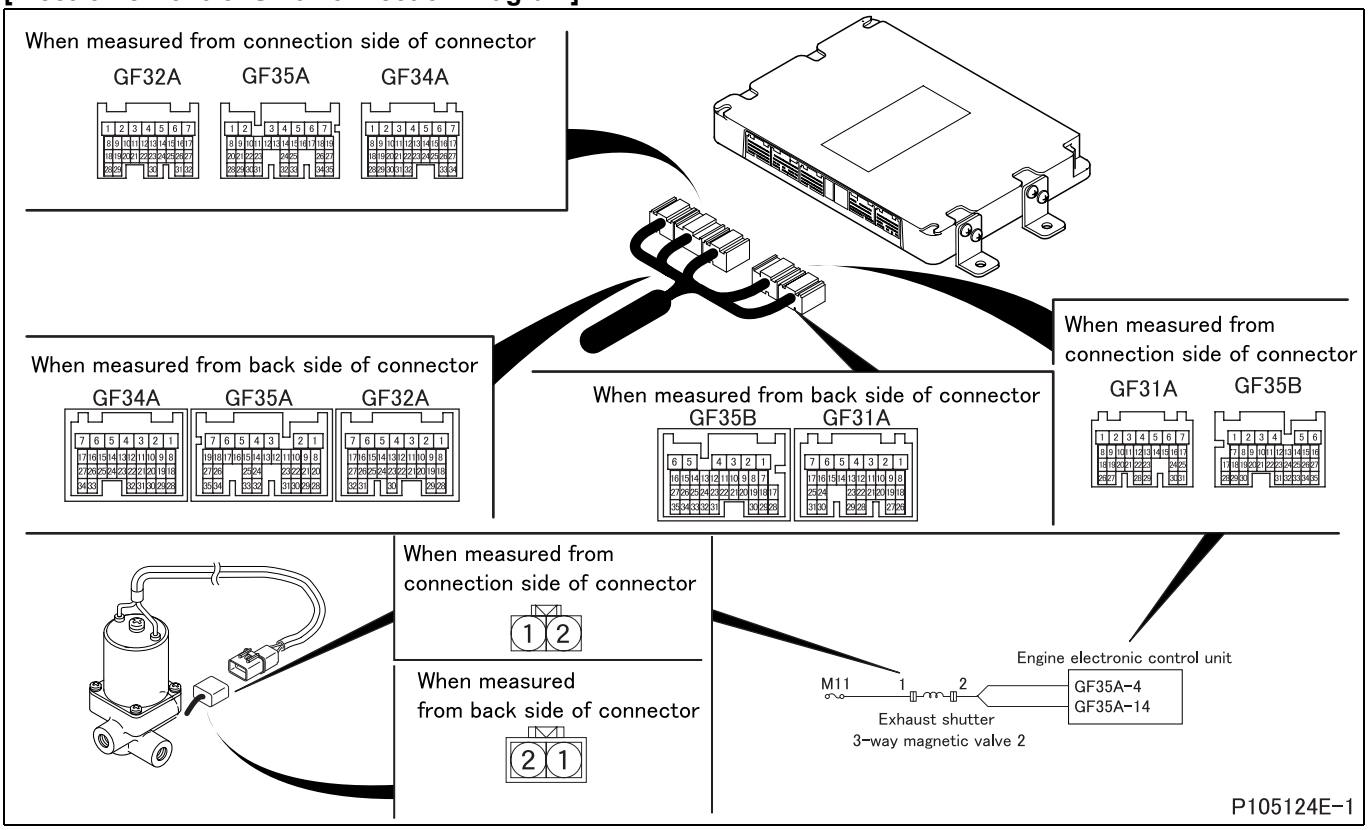

[Parts Identification and Location]

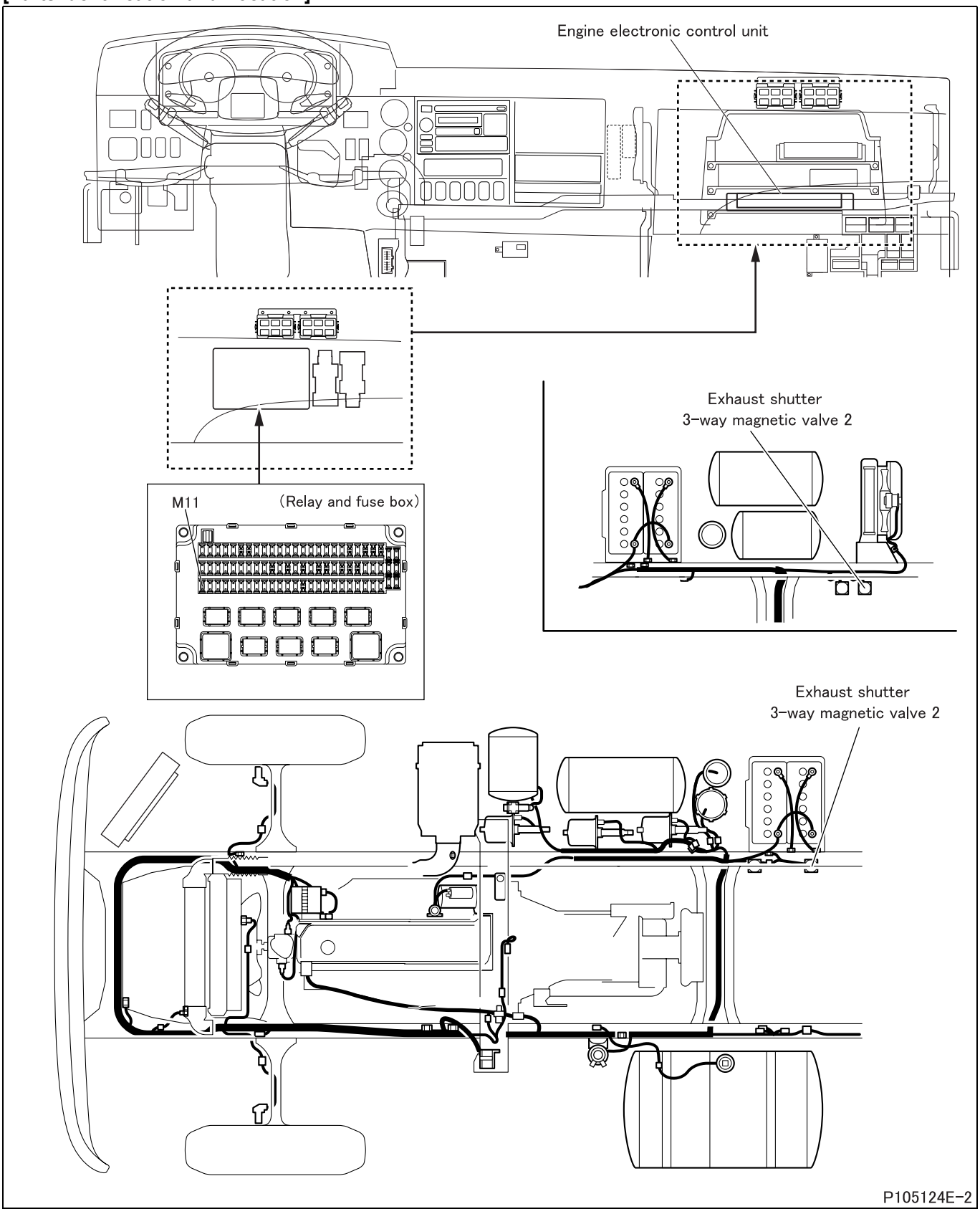

[Fault diagnosis]

- Perform checks in the sequence of the following steps.

Step 1	Inspection items		Inspection by control data
	Maintenance item		Perform actuator test item No. AB “Exhaust Brake M/V1 + M/V2”.
	Inspection condition		Starter switch: ON
	Requirements		3-way magnetic valve operation sound is noted (automatically reset after 6 seconds), or ON/OFF switching of Service Data: item No. 88 “Exhaust M/V” is effected.
	Inspection result (Is the judging standard satisfied?)	YES	Go to transient fault (See Gr00.).
		NO	Go to step 2.

Step 2	Inspection items		Inspection of electronic control unit connector
	Maintenance item		Inspection of connector
	Inspection condition		–
	Requirements		• Connector is properly connected. • No trace of water entry is found. • No corrosion is found in terminal. • Connection to terminal is appropriate.
	Inspection result (Is the judging standard satisfied?)	YES	Go to step 3.
		NO	Modify connector.

Step 3	Inspection items		Inspection of 3-way magnetic valve connector
	Maintenance item		Inspection of connector
	Inspection condition		–
	Requirements		• Connector is properly connected. • No trace of water entry is found. • No corrosion is found in terminal. • Connection to terminal is appropriate.
	Inspection result (Is the judging standard satisfied?)	YES	Go to step 4.
		NO	Modify connector.

Step 4	Inspection items		Inspection of 3-way magnetic valve unit
	Maintenance item		Measure minimum operating voltage when 3-way magnetic valve operates (judge by operation sound).
	Inspection condition		Gradually increase from zero the voltage applied to terminals No. 1 (+) and 2 (–).
	Requirements		10 V or less
	Inspection result (Is the judging standard satisfied?)	YES	Go to step 5.
		NO	Replacement of 3-way magnetic valve

<Step 4 inspection diagram>

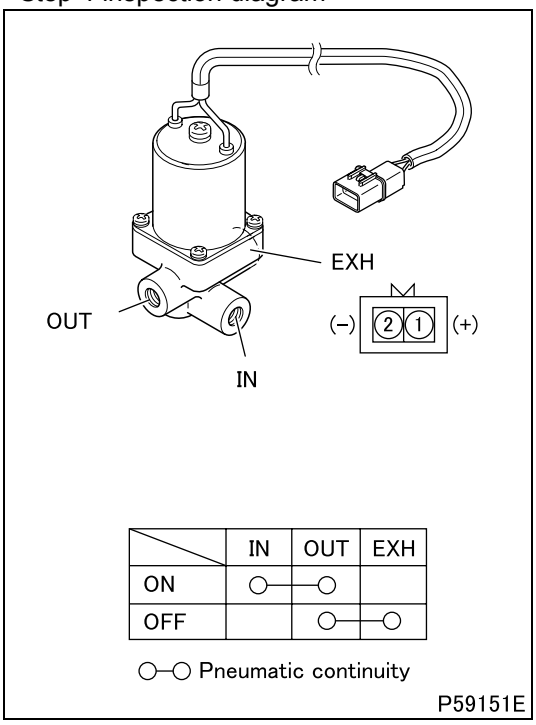

Step 5	Inspection items		Inspection of harness between 3-way magnetic valve and electronic control unit (ground)
	Maintenance item		Check circuit between 3-way magnetic valve connector terminal No. 2 and electronic control unit connector (GF35A) terminal No. 4 or 14.
	Inspection condition		Disconnect electronic control unit from harness and measure from connection side of harness connector.
	Requirements		There is continuity.
	Inspection result (Is the judging standard satisfied?)	YES	Go to step 6.
		NO	Modify harness.

Step 6	Inspection items		Inspection of harness between 3-way magnetic valve and fuse (power supply)
	Maintenance item		Check circuit between 3-way magnetic valve connector terminal No. 1 and fuse (M11).
	Inspection condition		Disconnect electronic control unit from harness and measure from connection side of harness connector.
	Requirements		There is continuity.
	Inspection result (Is the judging standard satisfied?)	YES	Go to step 7.
		NO	Modify harness.

Step 7	Inspection items		Inspection by control data
	Maintenance item		Perform actuator test item No. AB “Exhaust Brake M/V1 + M/V2”
	Inspection condition		Starter switch: ON
	Requirements		3-way magnetic valve operation sound is noted (automatically reset after 6 seconds), or ON/OFF switching of Service Data: item No. 88 “Exhaust M/V” is effected.
	Inspection result (Is the judging standard satisfied?)	YES	Go to transient fault (See Gr00.).
		NO	Replacement of electronic control unit

[Fault code]
Diagnosis code: P0500/Flash code: 25
[Monitor]
Abnormality of vehicle speed sensor
[Fault (outline)]
Signal invalid
[Diagnosis check]
- Output signal of vehicle speed sensor is monitored.

[Code generation condition]
- Abnormality of vehicle speed sensor signal (pulse inputs changing suddenly) during vehicle run remains as detected for approx. 5 seconds.
  (Warning lamp is lit and diagnosis code is displayed on first establishment of code generation condition.)

[Diagnosis check timing]
- When code generation condition is established after starter switch ON

[Diagnostic requirement]
- 2 seconds passed after starter switch ON
- 2 seconds passed after cranking
- Battery voltage: normal
- Engine in operation

[Control effected by electronic control unit during fault]
- Injection quantity is limited.
- Exhaust gas recirculation control is stopped.
- Throttle control is stopped.
- Diesel particulate filter regeneration (manual or automatic) is stopped.
- Auto cruise control is stopped.
- Vehicle speed limiting control is suspended.

[Probable cause of trouble]
- Open-circuit or short-circuit of harness between electronic control unit and vehicle speed sensor
- Abnormality of each connector
- Abnormality of pulse divider
- Abnormality of vehicle speed sensor
- Abnormality in electronic control unit

[Recoverability]
<Control during fault>
- Recovered if signal becomes normal with starter switch in ON position.

<Warning lamp>
- Extinguished after input of normal signal.

<Fault code>
- If code recovered to normal, automatically cleared at 40th warm up cycle after warning lamp is lit.
  (To clear as desired, erase from the memory.)

Warm up cycle : “Starter switch ON to start engine till starter switch OFF after coolant temperature increased and engine warmed up” constitutes 1 warm up cycle.

[Electronic Control Unit Connection Diagram]

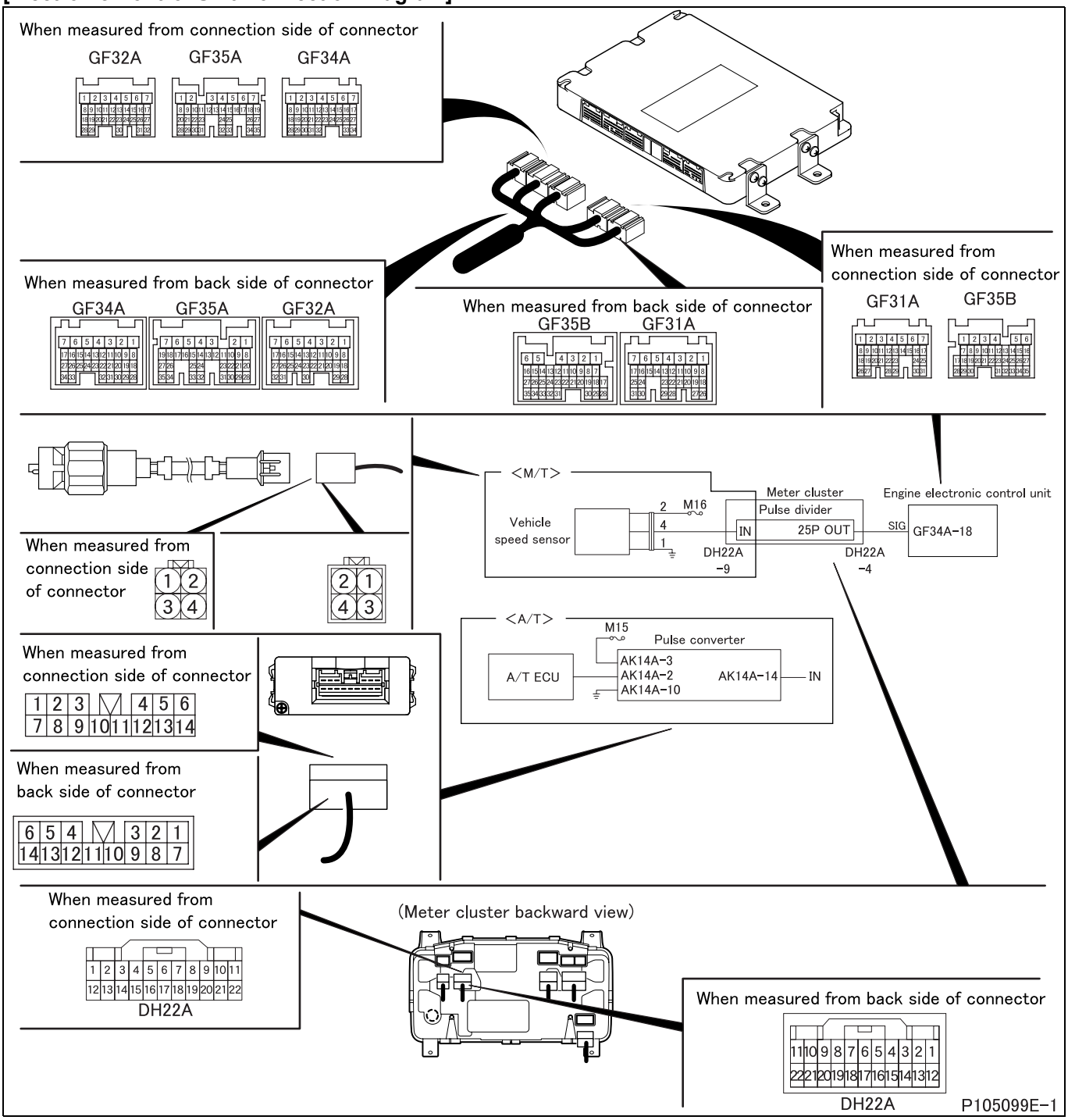

[Parts Identification and Location]

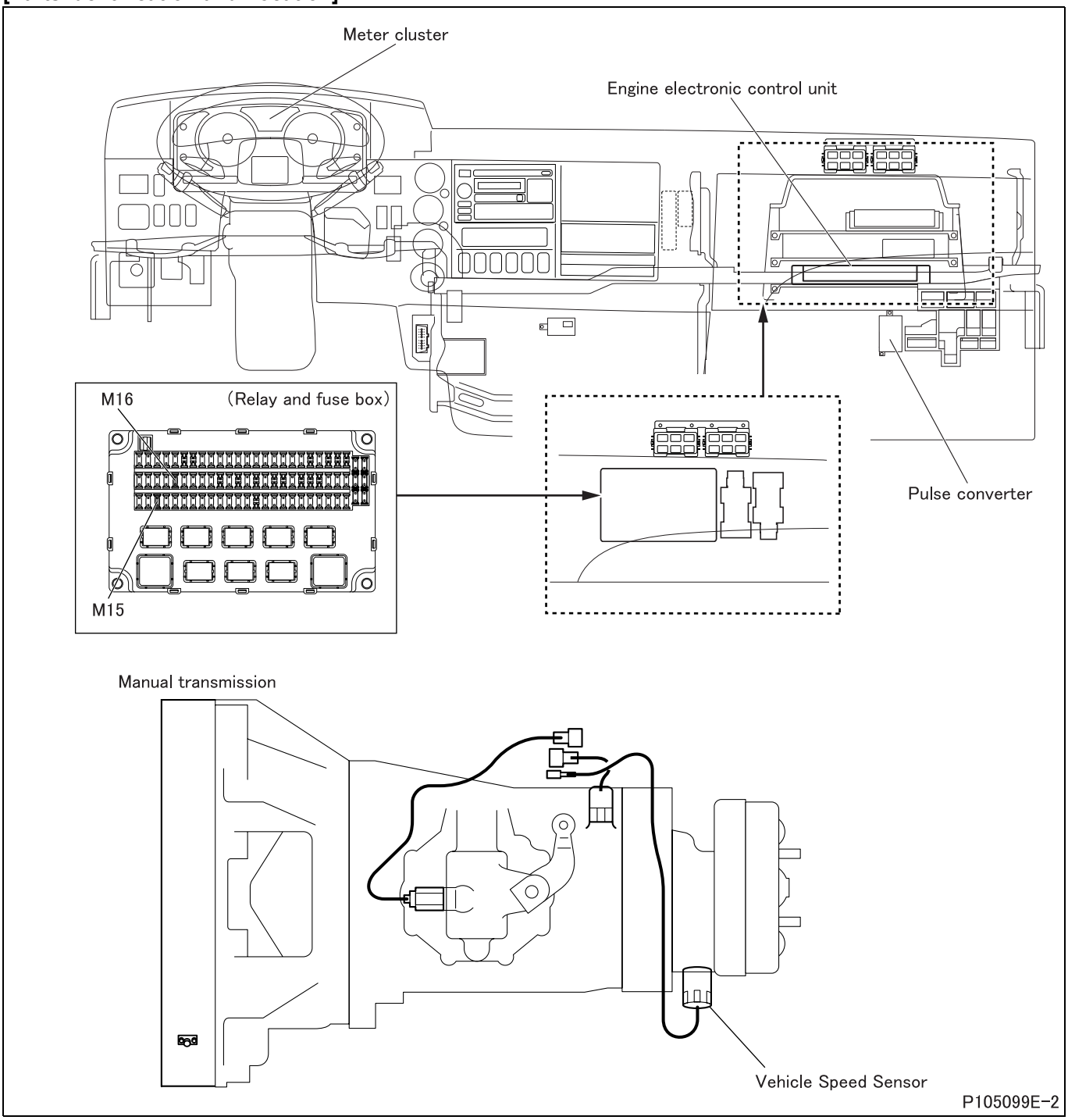

[Fault diagnosis]

- Perform checks in the sequence of the following steps.

Step 1	Inspection items		Inspection by control data
	Maintenance item		**<General Scanning Tool used>** • Measure item “Vehicle Speed Sensor”. **<Multi-Use Tester used>** • Measure item No. 3C “Vehicle Speed” of Service Data.
	Inspection condition		During vehicle run
	Requirements		Same indication as speedometer is given.
	Inspection result (Is the judging standard satisfied?)	YES	Go to transient fault (See Gr00.).
		NO	Go to step 2.

Step 2	Inspection items		Inspection by electronic control unit connector (signal)
	Maintenance item		Measure value of voltage between connector (GF34A) terminal No.18 (+) and (GF32A) terminal No.5 (–).
	Inspection condition		• Starter switch: ON • Measure from back side of harness connector with each device connected to harness. • Slowly turn the wheel using chassis dynamometer or the like.
	Requirements		• Low pulse: 0.5 V or less • High pulse: 8 ± 1 V
	Inspection result (Is the judging standard satisfied?)	YES	Go to step 3.
		NO	Go to step 4.

Step 3	Inspection items		Inspection of electronic control unit connector
	Maintenance item		Inspection of connector
	Inspection condition		–
	Requirements		• Connector is properly connected. • No trace of water entry is found. • No corrosion is found in terminal. • Connection to terminal is appropriate.
	Inspection result (Is the judging standard satisfied?)	YES	Go to step 12.
		NO	Modify connector.

Step 4	Inspection items		Inspection of harness between electronic control unit and pulse divider (built in meter cluster)
	Maintenance item		Check circuit between electronic control unit connector (GF34A) terminal No.18 and meter cluster connector (DH22A) terminal No.4.
	Inspection condition		Disconnect each device from harness and measure from connection side of harness connector.
	Requirements		There is continuity.
	Inspection result (Is the judging standard satisfied?)	YES	Go to step 5.
		NO	Modify harness.

Step 5	Inspection items		Inspection by pulse divider (built in meter cluster) connector (input signal)
	Maintenance item		Measure value of voltage between connector (DH22A) terminal No.9 (+) and 12 (–).
	Inspection condition		• Starter switch: ON • Measure from back side of harness connector with each device connected to harness. • Slowly turn the wheel using chassis dynamometer or the like.
	Requirements		• Low pulse: 0.5 V or less • High pulse: 8 ± 1 V
	Inspection result (Is the judging standard satisfied?)	YES	Go to step 12.
		NO	Go to step 6.

Step 6	Inspection items		Inspection of vehicle speed sensor unit (25 pulse output) <Manual transmission> For vehicles with automatic transmission, go to step 7.
	Maintenance item		Measure maximum value (high pulse voltage) and minimum value (low pulse voltage) of voltage generated between connector terminals No. 4 (+) and No. 1 (–).
	Inspection condition		Slowly turn sensor shaft with voltage DC 12 V applied between connector terminals No. 2 (+) and No. 1 (–).
	Requirements		• Low pulse: 0.5 V or less • High pulse: 8 ± 1 V
	Inspection result (Is the judging standard satisfied?)	YES	Go to step 8.
		NO	Replacement of sensor

<Step 6 inspection diagram>

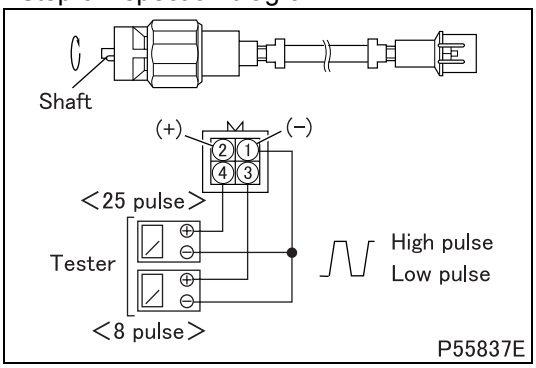

Step 7	Inspection items		Inspection of pulse converter (25 pulse output) <Automatic transmission> For vehicles with manual transmission, go to step 8.
	Maintenance item		Measure value of voltage between pulse converter connector terminal No.14 (+) and 10 (–).
	Inspection condition		• Starter switch: ON • Measure from back side of harness connector with each device connected to harness. • Slowly turn the wheel using chassis dynamometer or the like.
	Requirements		• Low pulse: 0.5 V or less • High pulse: 8 ± 1 V
	Inspection result (Is the judging standard satisfied?)	YES	Go to step 8.
		NO	Replacement of pulse converter

Step 8	Inspection items		Inspection of sensor harness and fuse (power supply)
	Maintenance item		<Manual transmission> • Check circuit between vehicle speed sensor connector No. 2 and fuse (M16). <Automatic transmission> • Check circuit between pulse converter connector terminal No.3 and fuse (M15).
	Inspection condition		Disconnect each device from harness and measure from connection side of harness connector.
	Requirements		There is continuity.
	Inspection result (Is the judging standard satisfied?)	YES	Go to step 9.
		NO	Modify harness.

Step 9	Inspection items		Inspection of sensor harness (ground)
	Maintenance item		<Manual transmission> • Check circuit between vehicle speed sensor connector terminal No.1 and chassis ground. <Automatic transmission> • Check circuit between pulse converter connector terminal No.10 and chassis ground.
	Inspection condition		Disconnect each device from harness and measure from connection side of harness connector.
	Requirements		There is continuity.
	Inspection result (Is the judging standard satisfied?)	YES	Go to step 10.
		NO	Modify harness.

Step 10	Inspection items		Inspection of sensor harness (signal)
	Maintenance item		<Manual transmission> • Check circuit between vehicle speed sensor connector terminal No. 4 and pulse divider (built in meter cluster) connector (DH22A) terminal No. 9. <Automatic transmission> • Check circuit between pulse converter connector terminal No. 14 and pulse divider (built in meter cluster) connector (DH22A) terminal No. 9.
	Inspection condition		Disconnect each device from harness and measure from connection side of harness connector.
	Requirements		There is continuity.
	Inspection result (Is the judging standard satisfied?)	YES	Go to step 11.
		NO	Modify harness.

Step 11	Inspection items		Inspection by pulse divider (built in meter cluster) connector (output signal)
	Maintenance item		Measure value of voltage between connector (DH22A) terminal No.17 (+) and 12 (–).
	Inspection condition		• Starter switch: ON • Measure from back side of harness connector with each device connected to harness. • Slowly turn the wheel using chassis dynamometer or the like.
	Requirements		• Low pulse: 0.5 V or less • High pulse: 8 ± 1 V
	Inspection result (Is the judging standard satisfied?)	YES	Go to step 12.
		NO	Replacement of pulse divider (meter cluster)

Step 12	Inspection items		Inspection by control data
	Maintenance item		**<General Scanning Tool used>** • Measure item “Vehicle Speed Sensor”. **<Multi-Use Tester used>** • Measure item No. 3C “Vehicle Speed” of Service Data.
	Inspection condition		During vehicle run
	Requirements		Same indication as speedometer is given.
	Inspection result (Is the judging standard satisfied?)	YES	Go to transient fault (See Gr00.).
		NO	Replacement of electronic control unit

[Fault code]
Diagnosis code: P0502/Flash code: 25
[Monitor]
Abnormality of vehicle speed sensor
[Fault (outline)]
Too low
[Diagnosis check]
- Output signal of vehicle speed sensor is monitored.

[Code generation condition]
- Actual vehicle speed in running condition remains 0 km/h {0 MPH} for approx. 1 minute.
  (Warning lamp is lit and diagnosis code is displayed on first establishment of code generation condition.)

[Diagnosis check timing]
- When code generation condition is established after starter switch ON

[Diagnostic requirement]
- 2 seconds passed after starter switch ON
- 2 seconds passed after cranking
- Battery voltage: normal
- Transmission: in gear (except neutral)
- Engine in operation
- Water temperature: above 50°C {122°F}
- Clutch: in engagement
- Engine speed: more than 1000 rpm
- Injection quantity: more than 40 mm^3/st

[Control effected by electronic control unit during fault]
- Injection quantity is limited.
- Exhaust gas recirculation control is stopped.
- Throttle control is stopped.
- Diesel particulate filter regeneration (manual or automatic) is stopped.
- Auto cruise control is stopped.
- Vehicle speed limiting control is suspended.

[Probable cause of trouble]
- Open-circuit or short-circuit of harness between electronic control unit and vehicle speed sensor
- Abnormality of each connector
- Abnormality of pulse divider
- Abnormality of vehicle speed sensor
- Abnormality in electronic control unit

[Recoverability]
<Control during fault>
- Recovered if signal becomes normal with starter switch in ON position.

<Warning lamp>
- Extinguished after input of normal signal.

<Fault code>
- If code recovered to normal, automatically cleared at 40th warm up cycle after warning lamp is lit.
  (To clear as desired, erase from the memory.)

Warm up cycle : “Starter switch ON to start engine till starter switch OFF after coolant temperature increased and engine warmed up” constitutes 1 warm up cycle.

[Electronic Control Unit Connection Diagram]

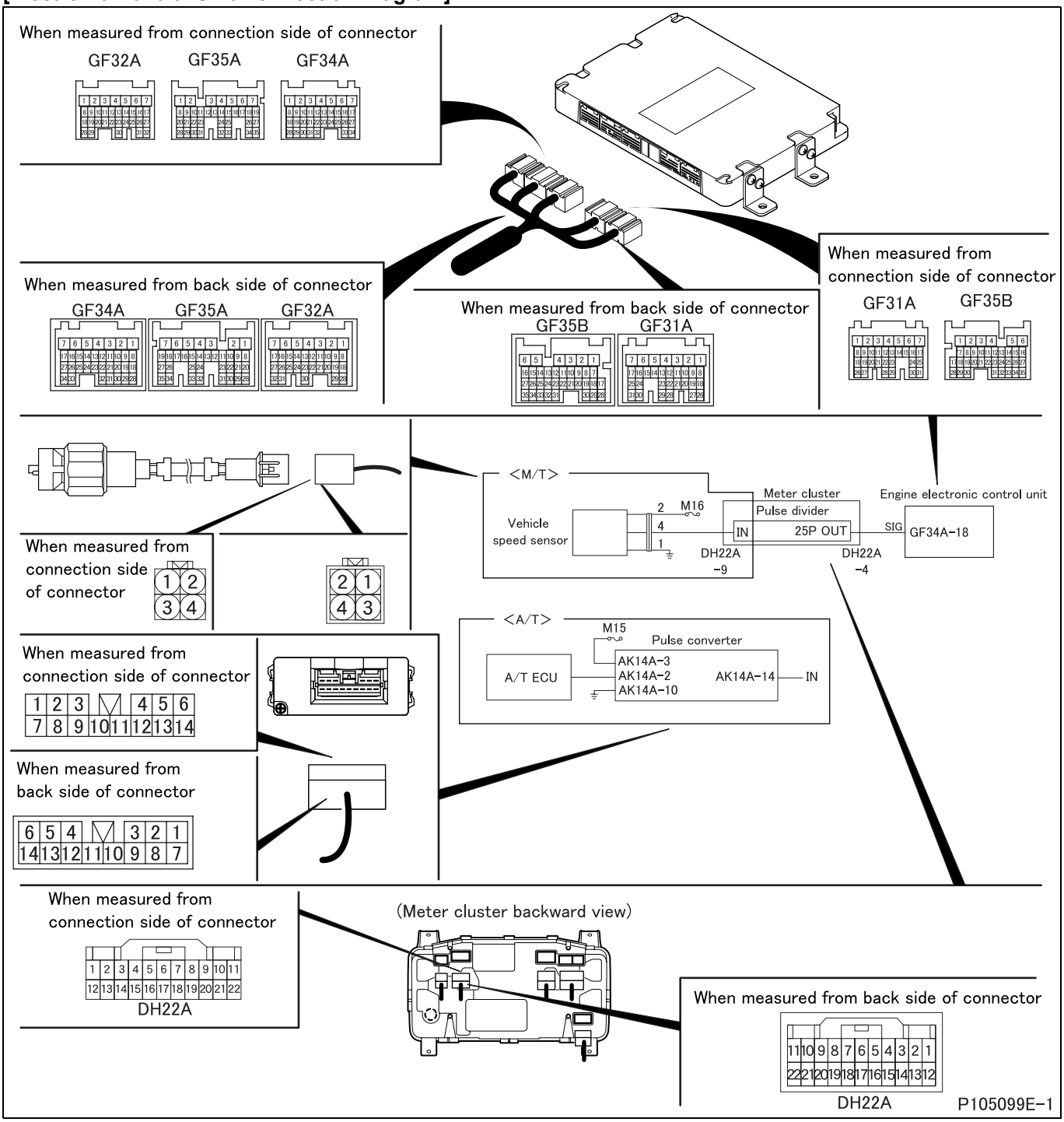

[Parts Identification and Location]

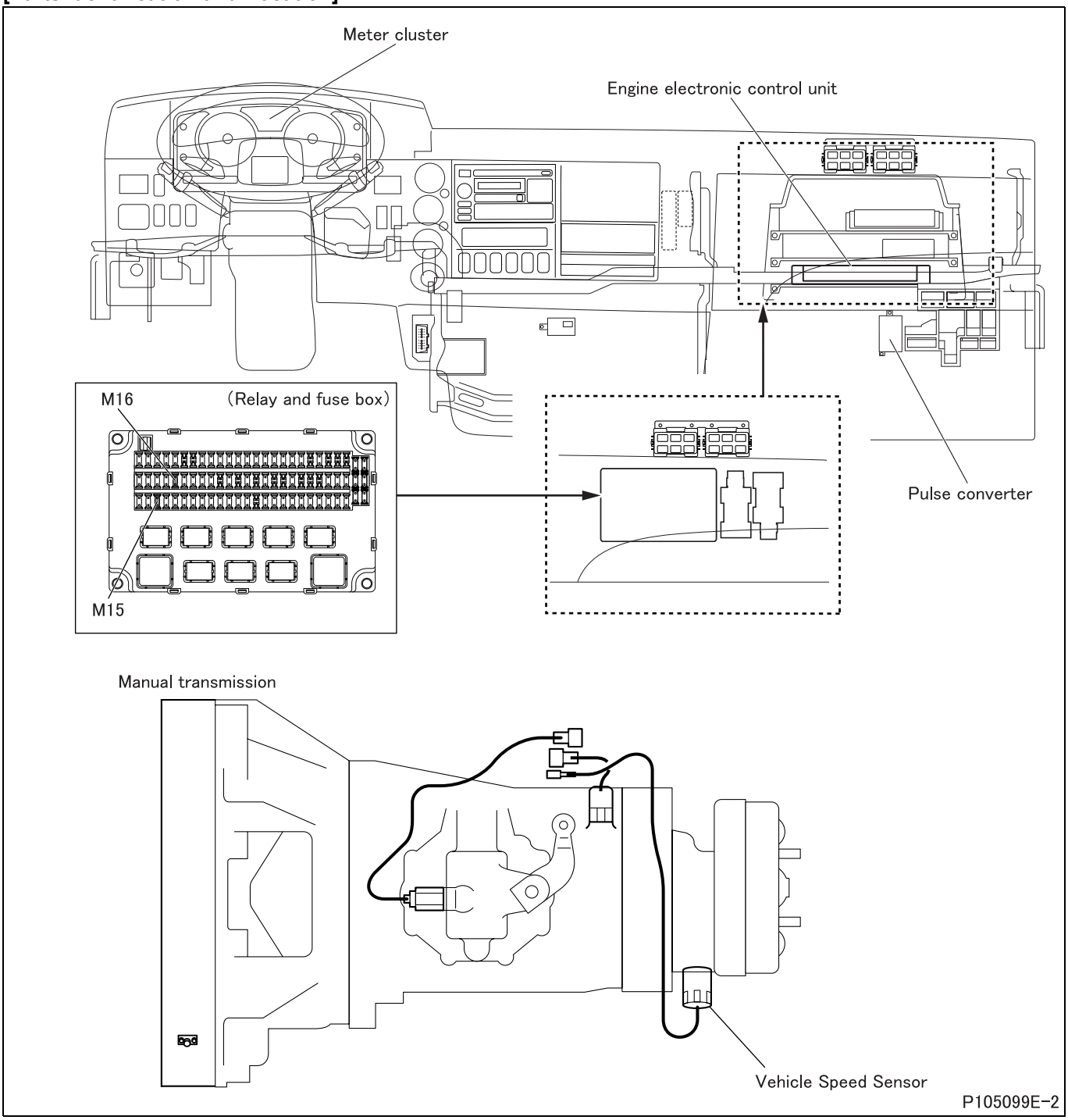

[Fault diagnosis]

- Perform checks in the sequence of the following steps.

Step 1	Inspection items		Inspection by control data
	Maintenance item		**<General Scanning Tool used>** • Measure item “Vehicle Speed Sensor”. **<Multi-Use Tester used>** • Measure item No. 3C “Vehicle Speed” of Service Data.
	Inspection condition		During vehicle run
	Requirements		Same indication as speedometer is given.
	Inspection result (Is the judging standard satisfied?)	YES	Go to transient fault (See Gr00.).
		NO	Go to step 2.

Step 2	Inspection items		Inspection by electronic control unit connector (signal)
	Maintenance item		Measure value of voltage between connector (GF34A) terminal No.18 (+) and (GF32A) terminal No.5 (–).
	Inspection condition		• Starter switch: ON • Measure from back side of harness connector with each device connected to harness. • Slowly turn the wheel using chassis dynamometer or the like.
	Requirements		• Low pulse: 0.5 V or less • High pulse: 8 ± 1 V
	Inspection result (Is the judging standard satisfied?)	YES	Go to step 3.
		NO	Go to step 4.

Step 3	Inspection items		Inspection of electronic control unit connector
	Maintenance item		Inspection of connector
	Inspection condition		–
	Requirements		• Connector is properly connected. • No trace of water entry is found. • No corrosion is found in terminal. • Connection to terminal is appropriate.
	Inspection result (Is the judging standard satisfied?)	YES	Go to step 12.
		NO	Modify connector.

Step 4	Inspection items		Inspection of harness between electronic control unit and pulse divider (built in meter cluster)
	Maintenance item		Check circuit between electronic control unit connector (GF34A) terminal No.18 and meter cluster connector (DH22A) terminal No.4.
	Inspection condition		Disconnect each device from harness and measure from connection side of harness connector.
	Requirements		There is continuity.
	Inspection result (Is the judging standard satisfied?)	YES	Go to step 5.
		NO	Modify harness.

Step 5	Inspection items		Inspection by pulse divider (built in meter cluster) connector (input signal)
	Maintenance item		Measure value of voltage between connector (DH22A) terminal No.9 (+) and 12 (–).
	Inspection condition		• Starter switch: ON • Measure from back side of harness connector with each device connected to harness. • Slowly turn the wheel using chassis dynamometer or the like.
	Requirements		• Low pulse: 0.5 V or less • High pulse: 8 ± 1 V
	Inspection result (Is the judging standard satisfied?)	YES	Go to step 12.
		NO	Go to step 6.

Step 6	Inspection items		Inspection of vehicle speed sensor unit (25 pulse output) <Manual transmission> For vehicles with automatic transmission, go to step 7.
	Maintenance item		Measure maximum value (high pulse voltage) and minimum value (low pulse voltage) of voltage generated between connector terminals No. 4 (+) and No. 1 (–).
	Inspection condition		Slowly turn sensor shaft with voltage DC 12 V applied between connector terminals No. 2 (+) and No. 1 (–).
	Requirements		• Low pulse: 0.5 V or less • High pulse: 8 ± 1 V
	Inspection result (Is the judging standard satisfied?)	YES	Go to step 8.
		NO	Replacement of sensor

<Step 6 inspection diagram>

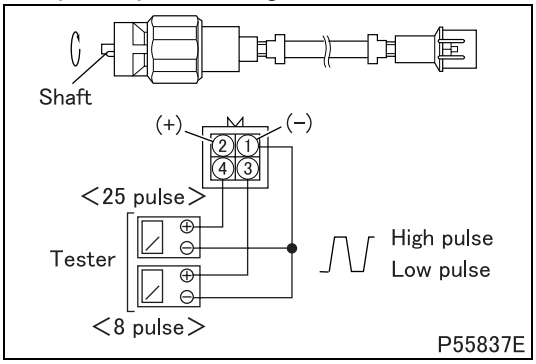

Step 7	Inspection items		Inspection of pulse converter (25 pulse output) <Automatic transmission> For vehicles with manual transmission, go to step 8.
	Maintenance item		Measure value of voltage between pulse converter connector terminal No.14 (+) and 10 (–).
	Inspection condition		• Starter switch: ON • Measure from back side of harness connector with each device connected to harness. • Slowly turn the wheel using chassis dynamometer or the like.
	Requirements		• Low pulse: 0.5 V or less • High pulse: 8 ± 1 V
	Inspection result (Is the judging standard satisfied?)	YES	Go to step 8.
		NO	Replacement of pulse converter

Step 8	Inspection items		Inspection of sensor harness and fuse (power supply)
	Maintenance item		<Manual transmission> • Check circuit between vehicle speed sensor connector No. 2 and fuse (M16). <Automatic transmission> • Check circuit between pulse converter connector terminal No.3 and fuse (M15).
	Inspection condition		Disconnect each device from harness and measure from connection side of harness connector.
	Requirements		There is continuity.
	Inspection result (Is the judging standard satisfied?)	YES	Go to step 9.
		NO	Modify harness.

Step 9	Inspection items		Inspection of sensor harness (ground)
	Maintenance item		<Manual transmission> • Check circuit between vehicle speed sensor connector terminal No.1 and chassis ground. <Automatic transmission> • Check circuit between pulse converter connector terminal No.10 and chassis ground.
	Inspection condition		Disconnect each device from harness and measure from connection side of harness connector.
	Requirements		There is continuity.
	Inspection result (Is the judging standard satisfied?)	YES	Go to step 10.
		NO	Modify harness.

Step 10	Inspection items		Inspection of sensor harness (signal)
	Maintenance item		<Manual transmission> • Check circuit between vehicle speed sensor connector terminal No. 4 and pulse divider (built in meter cluster) connector (DH22A) terminal No. 9. <Automatic transmission> • Check circuit between pulse converter connector terminal No. 14 and pulse divider (built in meter cluster) connector (DH22A) terminal No. 9.
	Inspection condition		Disconnect each device from harness and measure from connection side of harness connector.
	Requirements		There is continuity.
	Inspection result (Is the judging standard satisfied?)	YES	Go to step 11.
		NO	Modify harness.

Step 11	Inspection items		Inspection by pulse divider (built in meter cluster) connector (output signal)
	Maintenance item		Measure value of voltage between connector (DH22A) terminal No.17 (+) and 12 (–).
	Inspection condition		• Starter switch: ON • Measure from back side of harness connector with each device connected to harness. • Slowly turn the wheel using chassis dynamometer or the like.
	Requirements		• Low pulse: 0.5 V or less • High pulse: 8 ± 1 V
	Inspection result (Is the judging standard satisfied?)	YES	Go to step 12.
		NO	Replacement of pulse divider (meter cluster)

Step 12	Inspection items		Inspection by control data
	Maintenance item		**<General Scanning Tool used>** • Measure item “Vehicle Speed Sensor”. **<Multi-Use Tester used>** • Measure item No. 3C “Vehicle Speed” of Service Data.
	Inspection condition		During vehicle run
	Requirements		Same indication as speedometer is given.
	Inspection result (Is the judging standard satisfied?)	YES	Go to transient fault (See Gr00.).
		NO	Replacement of electronic control unit

[Fault code]
Diagnosis code: P0503/Flash code: 25
[Monitor]
Abnormality of vehicle speed sensor
[Fault (outline)]
Too high
[Diagnosis check]
- Output signal of vehicle speed sensor is monitored.

[Code generation condition]
- Actual vehicle speed in engine idling condition remains 250 km/h {158.5 MPH} or more for approx. 1 minute. (Warning lamp is lit and diagnosis code is displayed on first establishment of code generation condition.)

[Diagnosis check timing]
- When code generation condition is established after starter switch ON

[Diagnostic requirement]
- 2 seconds passed after starter switch ON
- 2 seconds passed after cranking
- Battery voltage: normal
- Engine in operation
- Injection quantity: less than 30 mm^3/st

[Control effected by electronic control unit during fault]
- Injection quantity is limited.
- Exhaust gas recirculation control is stopped.
- Throttle control is stopped.
- Diesel particulate filter regeneration (manual or automatic) is stopped.
- Auto cruise control is stopped.
- Vehicle speed limiting control is suspended.

[Probable cause of trouble]
- Open-circuit or short-circuit of harness between electronic control unit and vehicle speed sensor
- Abnormality of each connector
- Abnormality of pulse divider
- Abnormality of vehicle speed sensor
- Abnormality in electronic control unit

[Recoverability]
<Control during fault>
- Recovered if signal becomes normal with starter switch in ON position.

<Warning lamp>
- Extinguished after input of normal signal.

<Fault code>
- If code recovered to normal, automatically cleared at 40th warm up cycle after warning lamp is lit. (To clear as desired, erase from the memory.)

Warm up cycle : “Starter switch ON to start engine till starter switch OFF after coolant temperature increased and engine warmed up” constitutes 1 warm up cycle.

[Electronic Control Unit Connection Diagram]

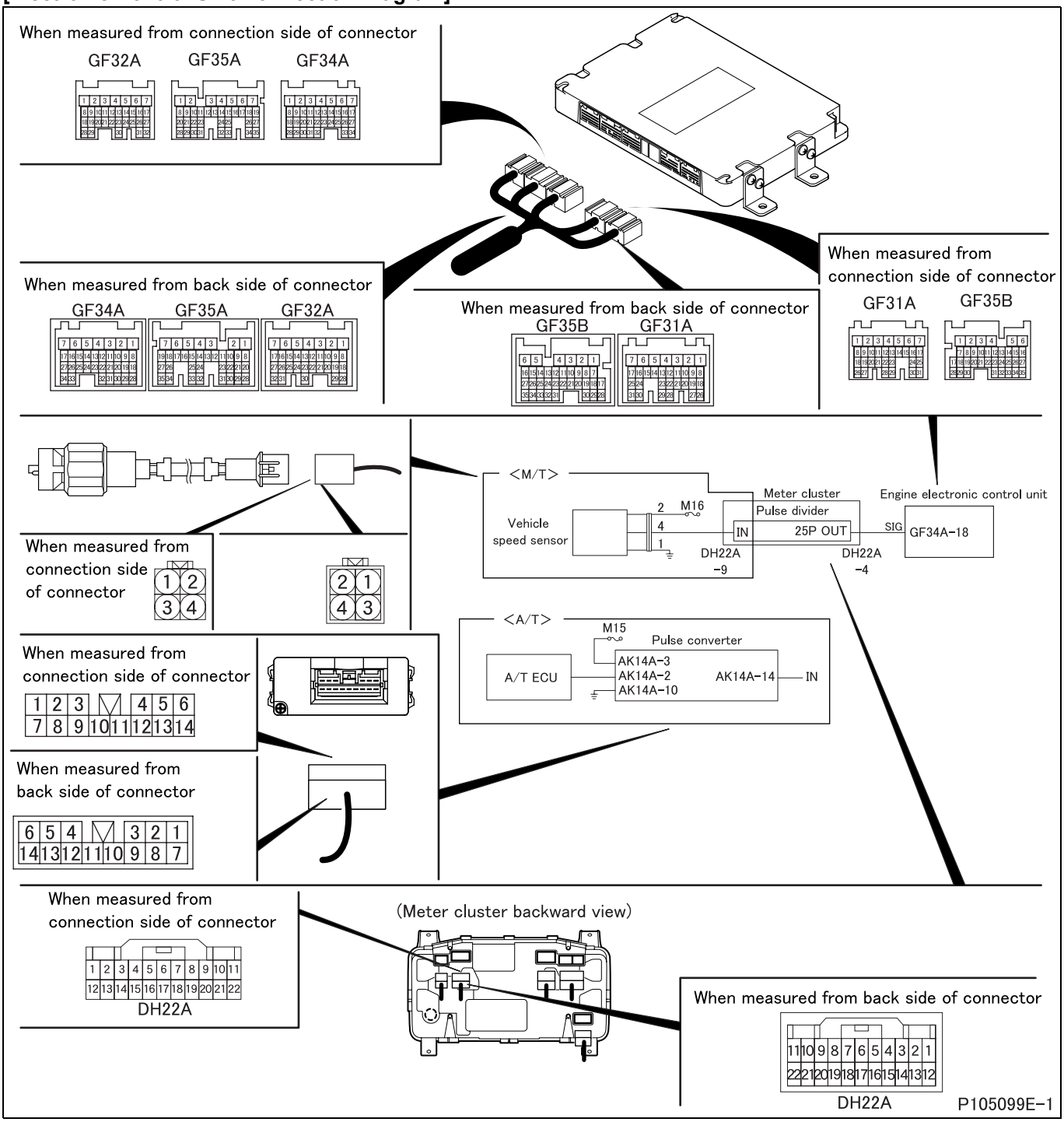

[Parts Identification and Location]

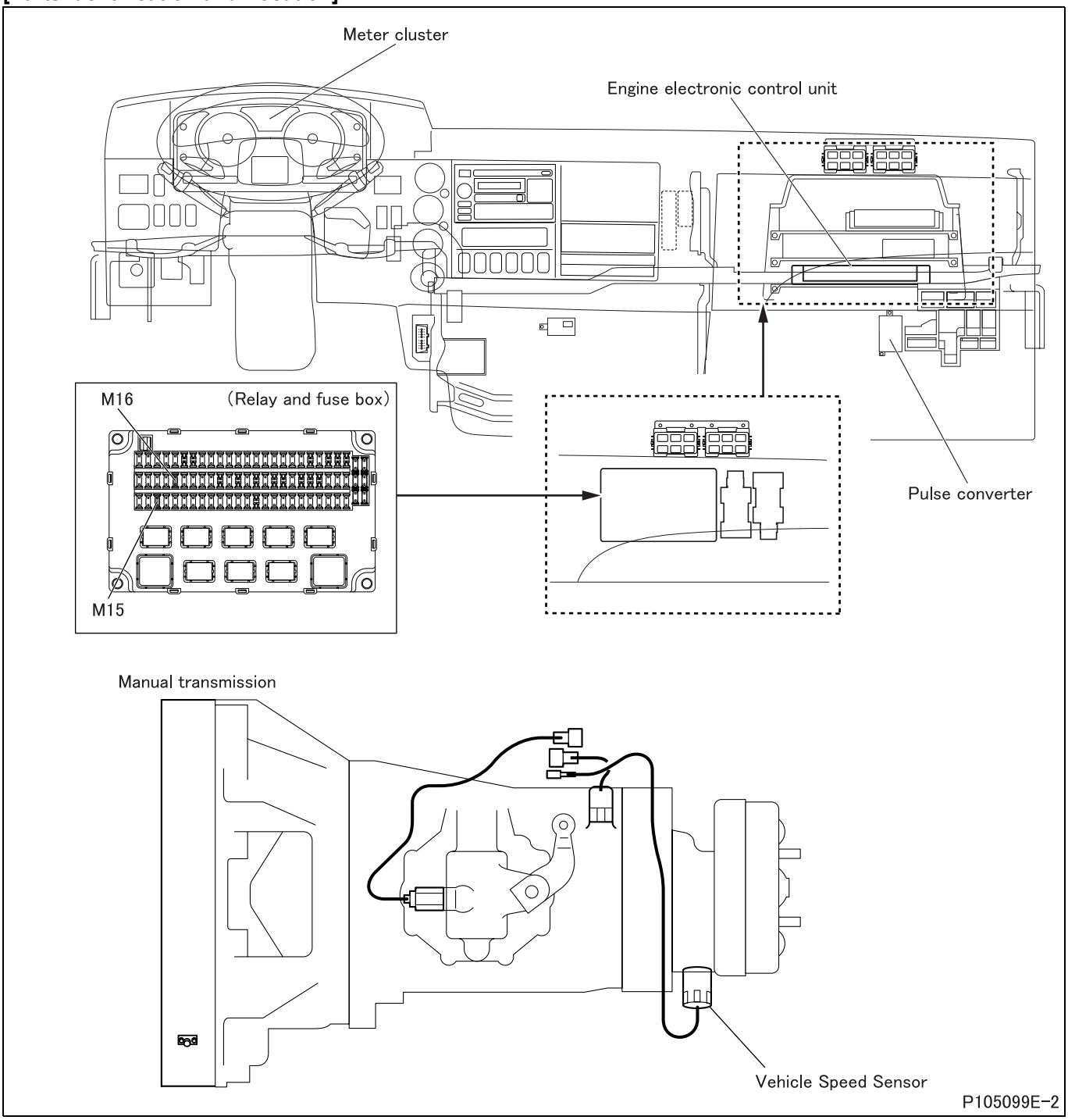

[Fault diagnosis]

- Perform checks in the sequence of the following steps.

Step 1	Inspection items		Inspection by control data
	Maintenance item		**<General Scanning Tool used>** • Measure item “Vehicle Speed Sensor”. **<Multi-Use Tester used>** • Measure item No. 3C “Vehicle Speed” of Service Data.
	Inspection condition		During vehicle run
	Requirements		Same indication as speedometer is given.
	Inspection result (Is the judging standard satisfied?)	YES	Go to transient fault (See Gr00.).
		NO	Go to step 2.

Step 2	Inspection items		Inspection by electronic control unit connector (signal)
	Maintenance item		Measure value of voltage between connector (GF34A) terminal No.18 (+) and (GF32A) terminal No.5 (–).
	Inspection condition		• Starter switch: ON • Measure from back side of harness connector with each device connected to harness. • Slowly turn the wheel using chassis dynamometer or the like.
	Requirements		• Low pulse: 0.5 V or less • High pulse: 8 ± 1 V
	Inspection result (Is the judging standard satisfied?)	YES	Go to step 3.
		NO	Go to step 4.

Step 3	Inspection items		Inspection of electronic control unit connector
	Maintenance item		Inspection of connector
	Inspection condition		–
	Requirements		• Connector is properly connected. • No trace of water entry is found. • No corrosion is found in terminal. • Connection to terminal is appropriate.
	Inspection result (Is the judging standard satisfied?)	YES	Go to step 12.
		NO	Modify connector.

Step 4	Inspection items		Inspection of harness between electronic control unit and pulse divider (built in meter cluster)
	Maintenance item		Check circuit between electronic control unit connector (GF34A) terminal No.18 and meter cluster connector (DH22A) terminal No.4.
	Inspection condition		Disconnect each device from harness and measure from connection side of harness connector.
	Requirements		There is continuity.
	Inspection result (Is the judging standard satisfied?)	YES	Go to step 5.
		NO	Modify harness.

Step 5	Inspection items		Inspection by pulse divider (built in meter cluster) connector (input signal)
	Maintenance item		Measure value of voltage between connector (DH22A) terminal No.9 (+) and 12 (–).
	Inspection condition		• Starter switch: ON • Measure from back side of harness connector with each device connected to harness. • Slowly turn the wheel using chassis dynamometer or the like.
	Requirements		• Low pulse: 0.5 V or less • High pulse: 8 ± 1 V
	Inspection result (Is the judging standard satisfied?)	YES	Go to step 12.
		NO	Go to step 6.

Step 6	Inspection items		Inspection of vehicle speed sensor unit (25 pulse output) <Manual transmission> For vehicles with automatic transmission, go to step 7.
	Maintenance item		Measure maximum value (high pulse voltage) and minimum value (low pulse voltage) of voltage generated between connector terminals No. 4 (+) and No. 1 (–).
	Inspection condition		Slowly turn sensor shaft with voltage DC 12 V applied between connector terminals No. 2 (+) and No. 1 (–).
	Requirements		• Low pulse: 0.5 V or less • High pulse: 8 ± 1 V
	Inspection result (Is the judging standard satisfied?)	YES	Go to step 8.
		NO	Replacement of sensor

<Step 6 inspection diagram>

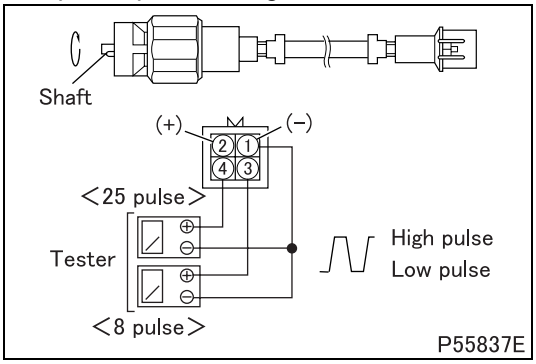

Step 7	Inspection items		Inspection of pulse converter (25 pulse output) <Automatic transmission> For vehicles with manual transmission, go to step 8.
	Maintenance item		Measure value of voltage between pulse converter connector terminal No.14 (+) and 10 (–).
	Inspection condition		• Starter switch: ON • Measure from back side of harness connector with each device connected to harness. • Slowly turn the wheel using chassis dynamometer or the like.
	Requirements		• Low pulse: 0.5 V or less • High pulse: 8 ± 1 V
	Inspection result (Is the judging standard satisfied?)	YES	Go to step 8.
		NO	Replacement of pulse converter

Step 8	Inspection items		Inspection of sensor harness and fuse (power supply)
	Maintenance item		<Manual transmission> • Check circuit between vehicle speed sensor connector No. 2 and fuse (M16). <Automatic transmission> • Check circuit between pulse converter connector terminal No.3 and fuse (M15).
	Inspection condition		Disconnect each device from harness and measure from connection side of harness connector.
	Requirements		There is continuity.
	Inspection result (Is the judging standard satisfied?)	YES	Go to step 9.
		NO	Modify harness.

Step 9	Inspection items		Inspection of sensor harness (ground)
	Maintenance item		<Manual transmission> • Check circuit between vehicle speed sensor connector terminal No.1 and chassis ground. <Automatic transmission> • Check circuit between pulse converter connector terminal No.10 and chassis ground.
	Inspection condition		Disconnect each device from harness and measure from connection side of harness connector.
	Requirements		There is continuity.
	Inspection result (Is the judging standard satisfied?)	YES	Go to step 10.
		NO	Modify harness.

Step 10	Inspection items		Inspection of sensor harness (signal)
	Maintenance item		<Manual transmission> • Check circuit between vehicle speed sensor connector terminal No. 4 and pulse divider (built in meter cluster) connector (DH22A) terminal No. 9. <Automatic transmission> • Check circuit between pulse converter connector terminal No. 14 and pulse divider (built in meter cluster) connector (DH22A) terminal No. 9.
	Inspection condition		Disconnect each device from harness and measure from connection side of harness connector.
	Requirements		There is continuity.
	Inspection result (Is the judging standard satisfied?)	YES	Go to step 11.
		NO	Modify harness.

Step 11	Inspection items		Inspection by pulse divider (built in meter cluster) connector (output signal)
	Maintenance item		Measure value of voltage between connector (DH22A) terminal No.17 (+) and 12 (–).
	Inspection condition		• Starter switch: ON • Measure from back side of harness connector with each device connected to harness. • Slowly turn the wheel using chassis dynamometer or the like.
	Requirements		• Low pulse: 0.5 V or less • High pulse: 8 ± 1 V
	Inspection result (Is the judging standard satisfied?)	YES	Go to step 12.
		NO	Replacement of pulse divider (meter cluster)

Step 12	Inspection items		Inspection by control data
	Maintenance item		**<General Scanning Tool used>** • Measure item “Vehicle Speed Sensor”. **<Multi-Use Tester used>** • Measure item No. 3C “Vehicle Speed” of Service Data.
	Inspection condition		During vehicle run
	Requirements		Same indication as speedometer is given.
	Inspection result (Is the judging standard satisfied?)	YES	Go to transient fault (See Gr00.).
		NO	Replacement of electronic control unit

[Fault code]
Diagnosis code: P0512/Flash code: –
[Monitor]
Abnormality of starter switch
[Fault (outline)]
Short-circuited to battery
[Diagnosis check]
- Starter switch start signal is monitored.

[Code generation condition]
- Engine cranking command signal is detected when engine speed is 1200 rpm or more.
  (Warning lamp is lit and diagnosis code is displayed on first establishment of code generation condition.)

[Diagnosis check timing]
- When code generation condition is established after starter switch ON

[Diagnostic requirement]
- Battery voltage: normal
- Starter switch: ON
- Engine speed: more than 1200 rpm

[Control effected by electronic control unit during fault]
- Effects no special control.

[Probable cause of trouble]
- Open-circuit or short-circuit of harness between electronic control unit and starter switch
- Abnormality of each connector
- Abnormality of starter switch
- Abnormality in electronic control unit

[Recoverability]
<Control during fault>
- Recovered if signal becomes normal with starter switch in ON position.

<Fault code>
- To erase, execute Memory Clear.

[Electronic Control Unit Connection Diagram]

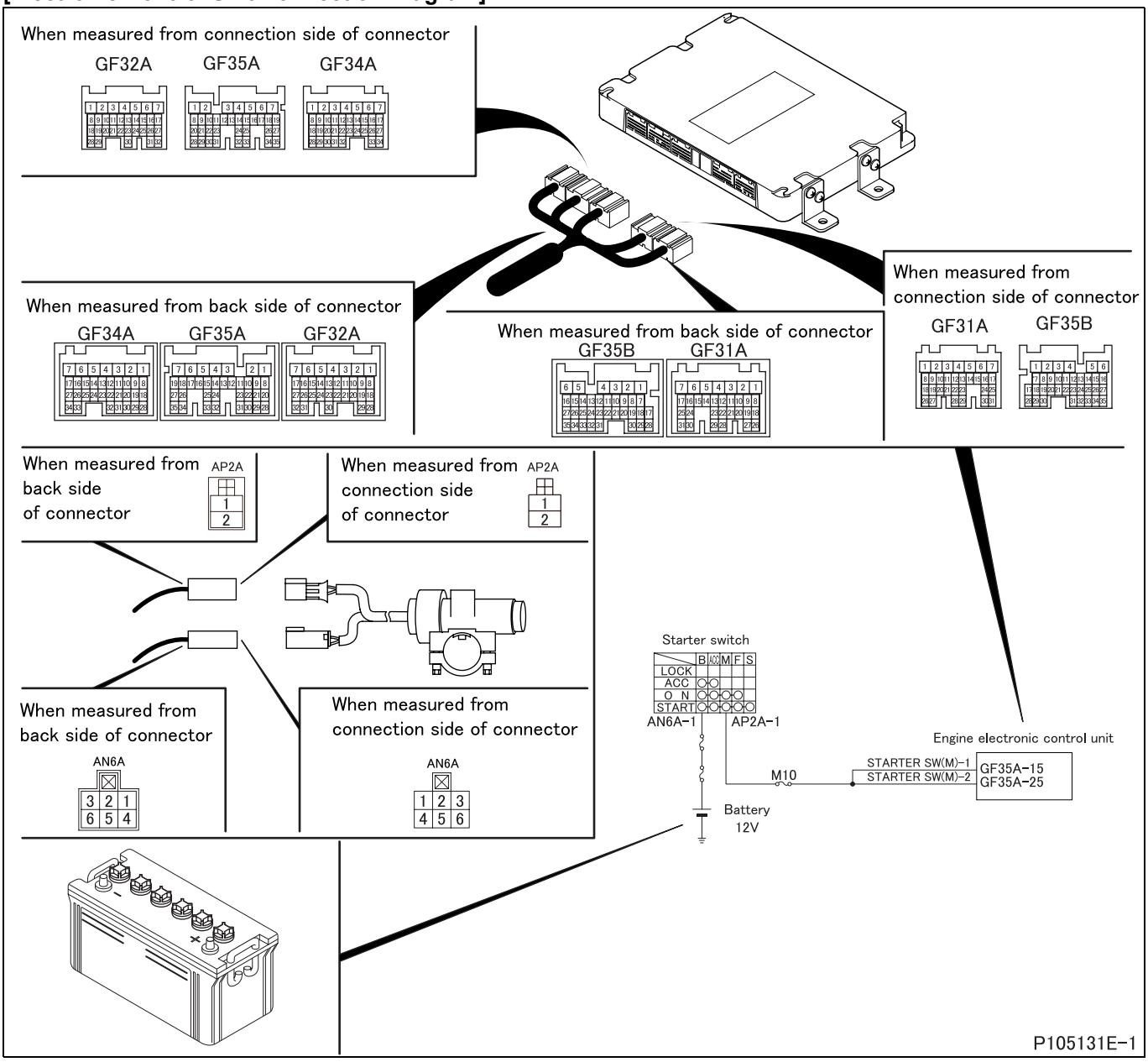

[Parts Identification and Location]

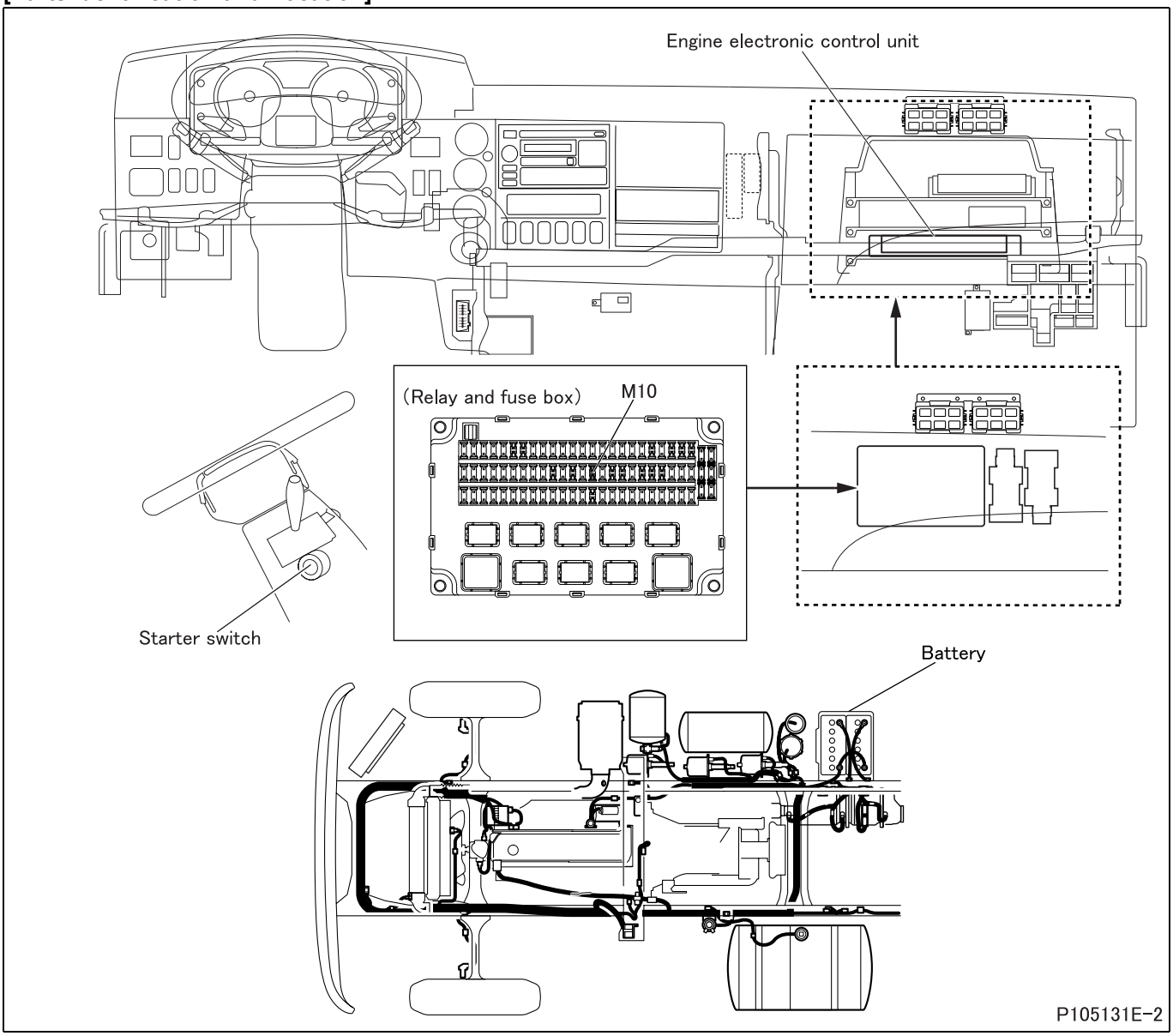

[Fault diagnosis]

- Perform checks in the sequence of the following steps.

Step 1	Inspection items		Inspection by control data
	Maintenance item		Measure item No. 42 “Power Supply Voltage” of Service Data.
	Inspection condition		Starter switch: ON
	Requirements		Equivalent to battery voltage
	Inspection result (Is the judging standard satisfied?)	YES	Go to transient fault (See Gr00.).
		NO	Go to step 2.

Step 2	Inspection items		Inspection of electronic control unit connector
	Maintenance item		Inspection of connector
	Inspection condition		–
	Requirements		• Connector is properly connected. • No trace of water entry is found. • No corrosion is found in terminal. • Connection to terminal is appropriate.
	Inspection result (Is the judging standard satisfied?)	YES	Go to step 3.
		NO	Modify connector.

Step 3	Inspection items		Inspection of starter switch connector
	Maintenance item		Inspection of connector
	Inspection condition		–
	Requirements		• Connector is properly connected. • No trace of water entry is found. • No corrosion is found in terminal. • Connection to terminal is appropriate.
	Inspection result (Is the judging standard satisfied?)	YES	Go to step 4.
		NO	Modify connector.

Step 4	Inspection items		Inspection of starter switch unit
	Maintenance item		Check continuity between connector terminals.
	Inspection condition		Check presence of continuity in each switch position.
	Requirements		• LOCK (without key): There is no continuity. • LOCK (with key): There is no continuity between 4 and 5. • OFF: There is no continuity between 4 and 5. • ACC: There is continuity between [2] and 2, and 4 and 5. • ON: There is continuity between [1], [2], 2 and 3, and 4 and 5. • START: There is continuity between [1], [2], 1, 2 and 3, and 4 and 5. Terminal No. with [ ] shows connector terminal of AP2A.
	Inspection result (Is the judging standard satisfied?)	YES	Go to step 5.
		NO	Replacement of starter switch

<Step 4 inspection diagram>

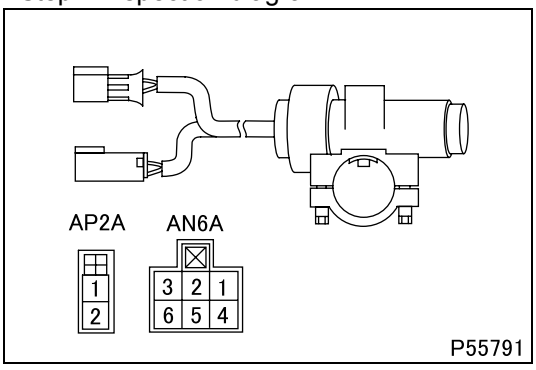

Step 5	Inspection items		Inspection of sensor harness (power supply: electronic control unit and fuse)
	Maintenance item		Check circuit between electronic control unit connector (GF35A) terminal No. 15 or 25 and fuse (M10).
	Inspection condition		Disconnect each device from harness and measure from connection side of harness connector.
	Requirements		There is continuity.
	Inspection result (Is the judging standard satisfied?)	YES	Go to step 6.
		NO	Modify harness.

Step 6	Inspection items		Inspection of sensor harness (power supply: fuse and starter switch)
	Maintenance item		Check circuit between fuse (M10) and starter switch connector (AP2A) terminal No. 1.
	Inspection condition		Disconnect each device from harness and measure from connection side of harness connector.
	Requirements		There is continuity.
	Inspection result (Is the judging standard satisfied?)	YES	Go to step 7.
		NO	Modify harness.

Step 7	Inspection items		Inspection by control data
	Maintenance item		Measure item No. 42 “Power Supply Voltage” of Service Data.
	Inspection condition		Starter switch: ON
	Requirements		Equivalent to battery voltage
	Inspection result (Is the judging standard satisfied?)	YES	Go to transient fault (See Gr00.).
		NO	Replacement of electronic control unit

[Fault code]
Diagnosis code: P0545/Flash code: 87
[Monitor]
Abnormality of DPF temperature sensor 1
[Fault (outline)]
Low signal range check
[Diagnosis check]
- Output voltage of DPF temperature sensor 1 is monitored.

[Code generation condition]
- Voltage of DPF temperature sensor 1 remains under 0.2 V for approx. 2.5 seconds.
  (Warning lamp is lit and diagnosis code is displayed on first establishment of code generation condition.)

[Diagnosis check timing]
- When code generation condition is established after starter switch ON

[Diagnostic requirement]
- 2 seconds passed after starter switch ON
- 2 seconds passed after cranking
- Battery voltage: normal
- Injection quantity: 50 mm^3/st or more
- Engine speed: 1200 rpm or more
- Water temperature: –7°C {19°F} or above

[Control effected by electronic control unit during fault]
- Injection quantity is limited.
- Exhaust gas recirculation control is stopped.
- Throttle control is stopped.
- Diesel particulate filter regeneration (manual or automatic) is stopped.
- Control is carried out using backup value (200°C {392°F}).

[Probable cause of trouble]
- Open-circuit or short-circuit of harness between electronic control unit and DPF temperature sensor 1
- Abnormality of each connector
- Abnormality of DPF temperature sensor 1
- Abnormality in electronic control unit

[Recoverability]
<Control during fault>
- Recovered if signal becomes normal with starter switch in ON position.

<Warning lamp>
- Extinguished at 4th driving cycle after normal signal is input.

<Fault code>
- Automatically cleared at 40th warm up cycle after warning lamp is extinguished.
  (To clear as desired, erase from the memory.)

Driving cycle : “Starter switch ON to start engine till starter switch OFF” constitutes 1 driving cycle.
Warm up cycle : “Starter switch ON to start engine till starter switch OFF after coolant temperature increased and engine warmed up” constitutes 1 warm up cycle.

[Electronic Control Unit Connection Diagram]

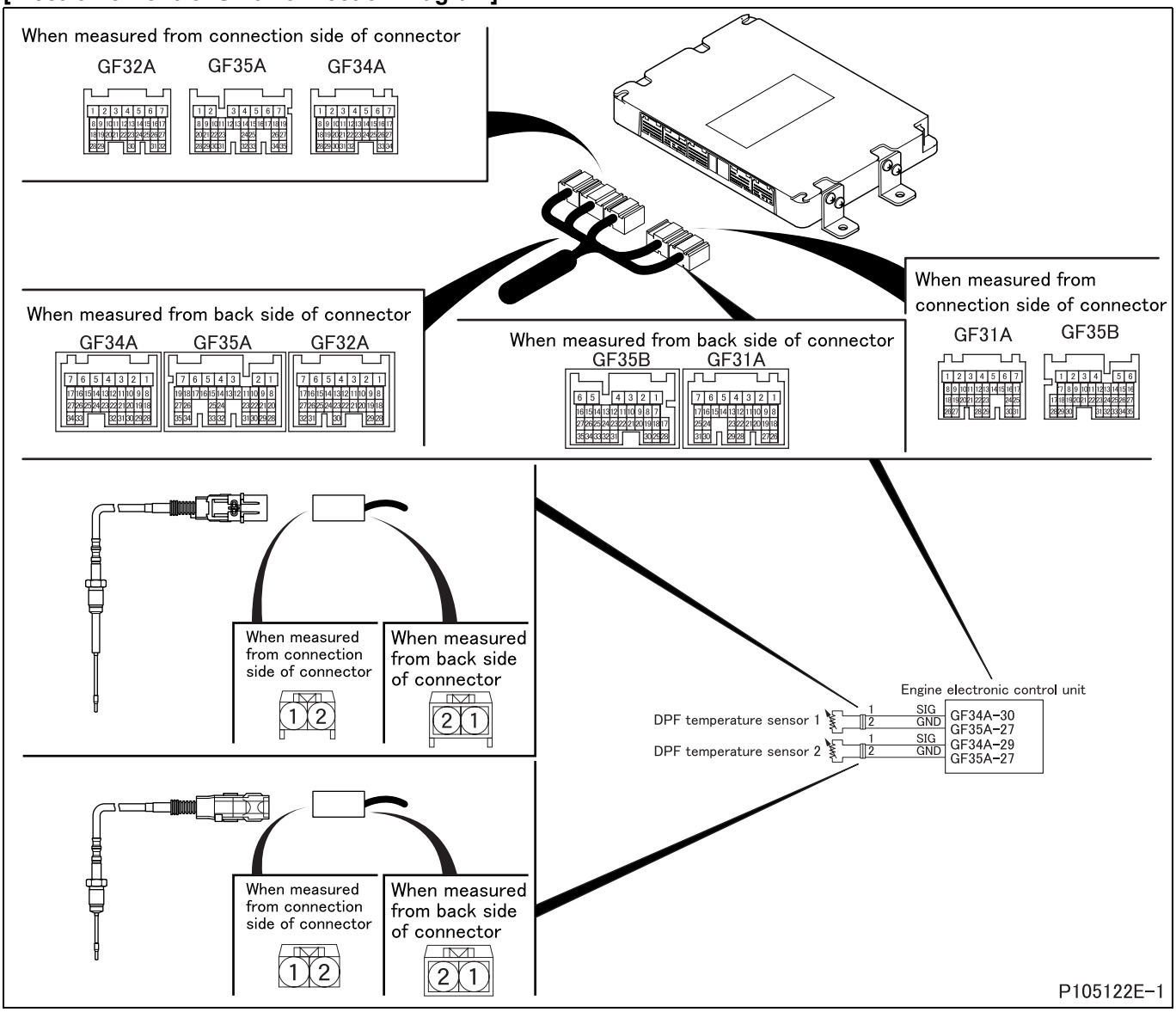

[Parts Identification and Location]

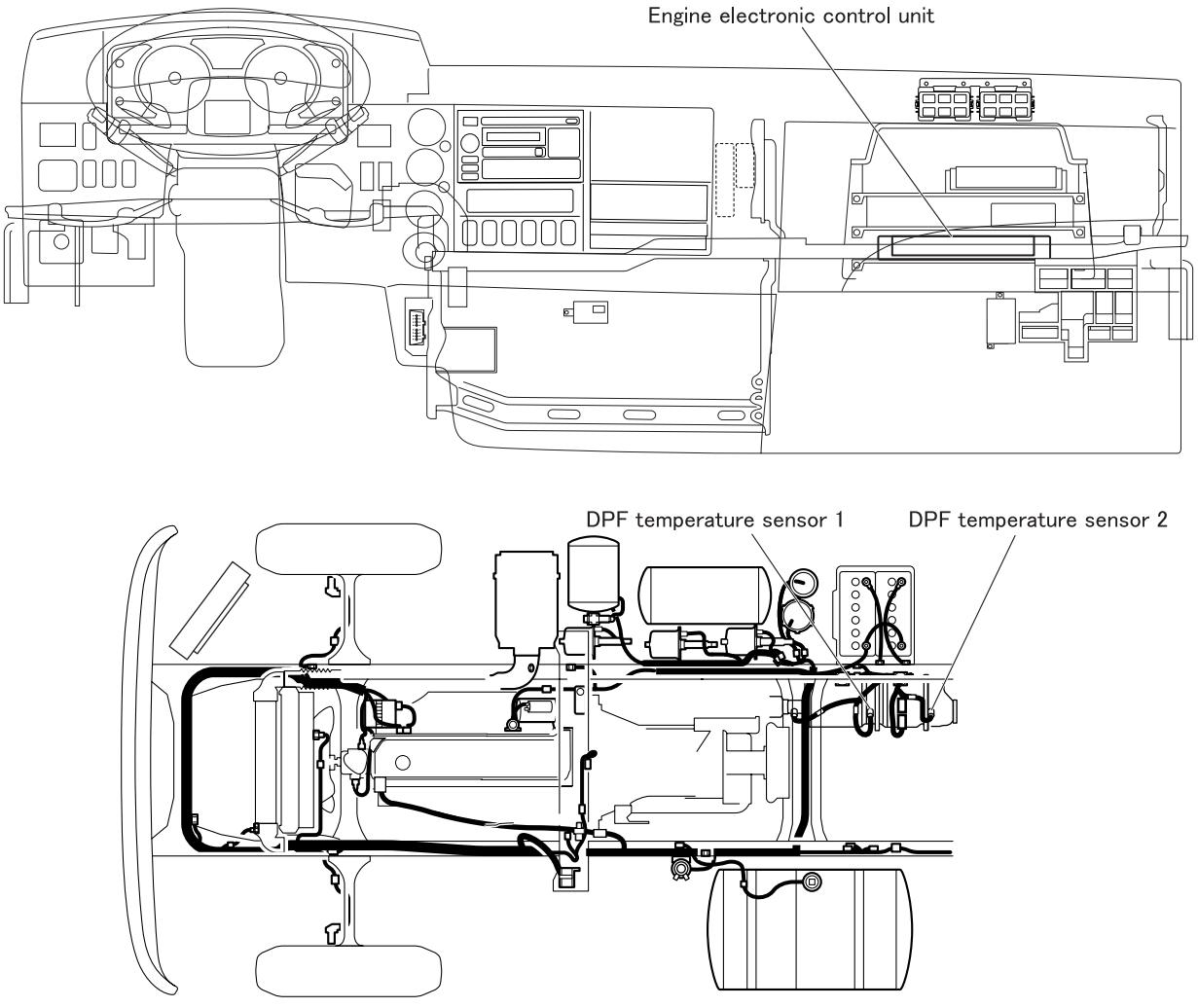

[Fault diagnosis]

- Perform checks in the sequence of the following steps.

Step 1	Inspection items		Inspection by control data
	Maintenance item		Measure item No. 29 “DPF Temperature 1 (inlet)” of Service Data.
	Inspection condition		While engine is warmed up
	Requirements		Temperature gradually rises up.
	Inspection result (Is the judging standard satisfied?)	YES	Go to transient fault (See Gr00.).
		NO	Go to step 2.

Step 2	Inspection items		Inspection by electronic control unit connector
	Maintenance item		Measure value of voltage between connector (GF34A) terminal No. 30 and (GF35A) terminal No. 27.
	Inspection condition		• Starter switch: OFF • Disconnect electronic control unit from harness and measure at vehicle-side connector half.
	Requirements		• 20°C {68°F} : 241.8 kΩ • 50°C {122°F} : 106.2 $^{+74.3}_{-41.8}$ kΩ • 100°C {212°F} : 33.56 $^{+17.60}_{-10.60}$ kΩ • 150°C {302°F} : 13.90 $^{+5.36}_{-3.60}$ kΩ • 200°C {392°F} : 6.896 $^{+2.064}_{-1.252}$ kΩ
	Inspection result (Is the judging standard satisfied?)	YES	Go to step 3.
		NO	Go to step 4.

Step 3	Inspection items		Inspection of electronic control unit connector
	Maintenance item		Inspection of connector
	Inspection condition		–
	Requirements		• Connector is properly connected. • No trace of water entry is found. • No corrosion is found in terminal. • Connection to terminal is appropriate.
	Inspection result (Is the judging standard satisfied?)	YES	Go to step 8.
		NO	Modify connector.

Step 4	Inspection items		Inspection of sensor connector
	Maintenance item		Inspection of connector
	Inspection condition		–
	Requirements		• Connector is properly connected. • No trace of water entry is found. • No corrosion is found in terminal. • Connection to terminal is appropriate.
	Inspection result (Is the judging standard satisfied?)	YES	Go to step 5.
		NO	Modify connector.

Step 5	Inspection items		Inspection of DPF temperature sensor 1 unit
	Maintenance item		Measure value of resistance between connector terminal No. 1 and 2.
	Inspection condition		• Put DPF temperature sensor 1 in vessel filled with engine oil. • Heat the oil to each of the specified temperatures. Stir the oil well while doing so.
	Requirements		• 20°C {68°F}: 241.8 kΩ • 50°C {122°F}: 106.2 $^{+74.3}_{-41.8}$ kΩ • 100°C {212°F}: 33.56 $^{+17.60}_{-10.60}$ kΩ • 150°C {302°F}: 13.90 $^{+5.36}_{-3.60}$ kΩ • 200°C {392°F}: 6.896 $^{+2.064}_{-1.252}$ kΩ
	Inspection result (Is the judging standard satisfied?)	YES	Go to step 6.
		NO	Replacement of sensor

<Step 5 inspection diagram>

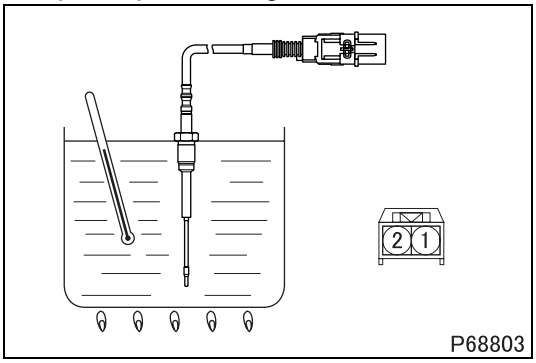

Step 6	Inspection items		Inspection of harness between electronic control unit and sensor (power supply)
	Maintenance item		Check circuit between electronic control unit connector (GF34A) terminal No. 30 and sensor connector terminal No. 1.
	Inspection condition		Disconnect each device from harness and measure from connection side of harness connector.
	Requirements		There is continuity.
	Inspection result (Is the judging standard satisfied?)	YES	Go to step 7.
		NO	Modify harness.

Step 7	Inspection items		Inspection of harness between electronic control unit and sensor (ground)
	Maintenance item		Check circuit between electronic control unit connector (GF35A) terminal No. 27 and sensor connector terminal No. 2.
	Inspection condition		Disconnect each device from harness and measure from connection side of harness connector.
	Requirements		There is continuity.
	Inspection result (Is the judging standard satisfied?)	YES	Go to step 8.
		NO	Modify harness.

Step 8	Inspection items		Inspection by control data
	Maintenance item		Measure item No. 29 “DPF Temperature 1 (inlet)” of Service Data.
	Inspection condition		While engine is warmed up
	Requirements		Temperature gradually rises up.
	Inspection result (Is the judging standard satisfied?)	YES	Go to transient fault (See Gr00.).
		NO	Replacement of electronic control unit

[Fault code]
Diagnosis code: P0546/Flash code: 87
[Monitor]
Abnormality of DPF temperature sensor 1
[Fault (outline)]
High signal range check
[Diagnosis check]
- Output voltage of DPF temperature sensor 1 is monitored.

[Code generation condition]
- Voltage of DPF temperature sensor 1 remains over 4.96 V for approx. 1 minute.
  (Warning lamp is lit and diagnosis code is displayed on first establishment of code generation condition.)

[Diagnosis check timing]
- When code generation condition is established after starter switch ON

[Diagnostic requirement]
- 2 seconds passed after starter switch ON
- 2 seconds passed after cranking
- Battery voltage: normal
- Engine in operation
- Engine speed: more than 1200 rpm
- Injection quantity: more than 50 mm^3/st
- Water temperature: more than –7°C {19°F}

[Control effected by electronic control unit during fault]
- Injection quantity is limited.
- Exhaust gas recirculation control is stopped.
- Throttle control is stopped.
- Diesel particulate filter regeneration (manual or automatic) is stopped.
- Control is carried out using backup value (200°C {392°F}).

[Probable cause of trouble]
- Open-circuit or short-circuit of harness between electronic control unit and DPF temperature sensor 1
- Abnormality of each connector
- Abnormality of DPF temperature sensor 1
- Abnormality in electronic control unit

[Recoverability]
<Control during fault>
- Recovered if signal becomes normal with starter switch in ON position.

<Warning lamp>
- Extinguished at 4th driving cycle after normal signal is input.

<Fault code>
- Automatically cleared at 40th warm up cycle after warning lamp is extinguished.
  (To clear as desired, erase from the memory.)

Driving cycle : “Starter switch ON to start engine till starter switch OFF” constitutes 1 driving cycle.
Warm up cycle : “Starter switch ON to start engine till starter switch OFF after coolant temperature increased and engine warmed up” constitutes 1 warm up cycle.

[Electronic Control Unit Connection Diagram]

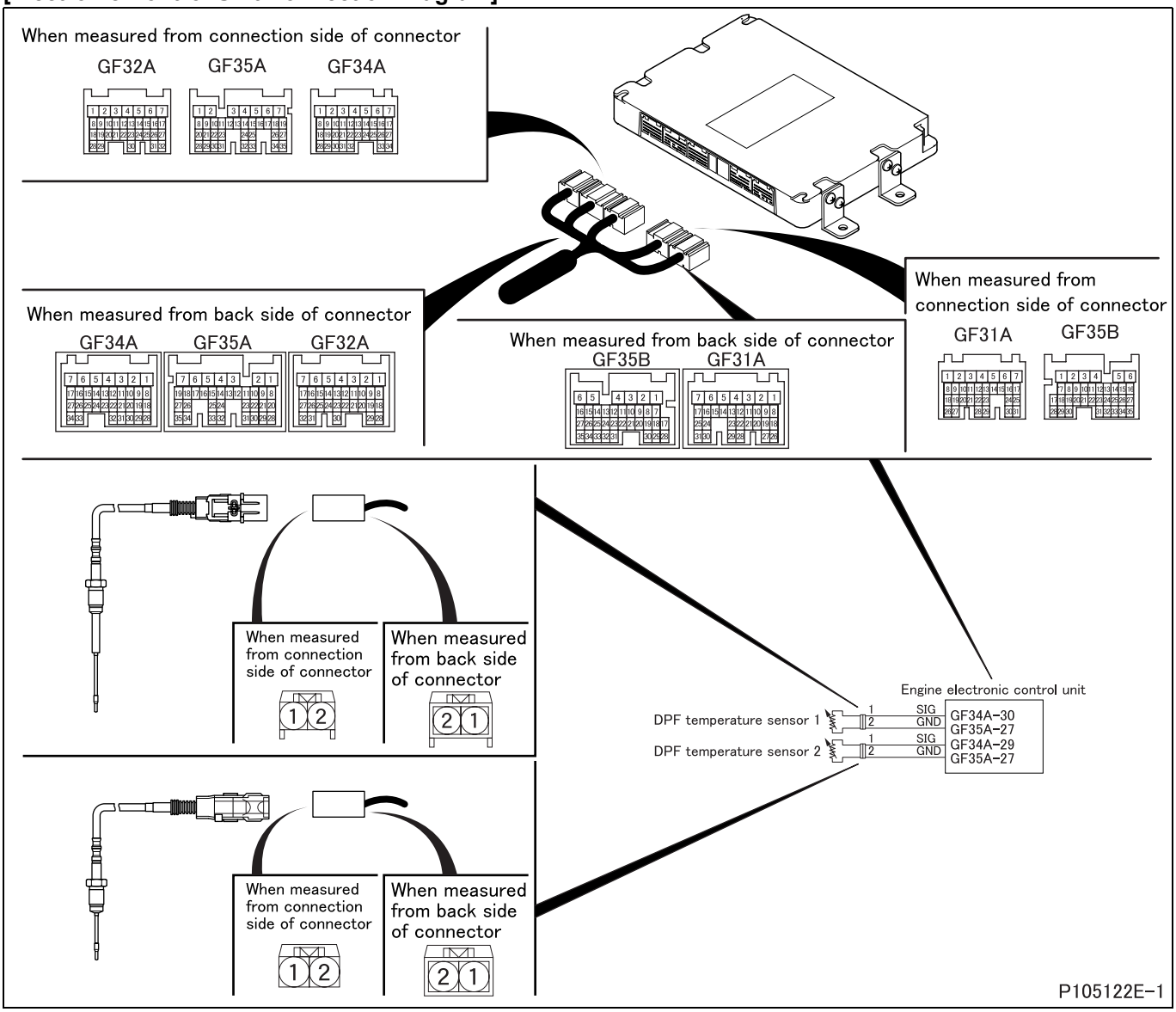

[Parts Identification and Location]

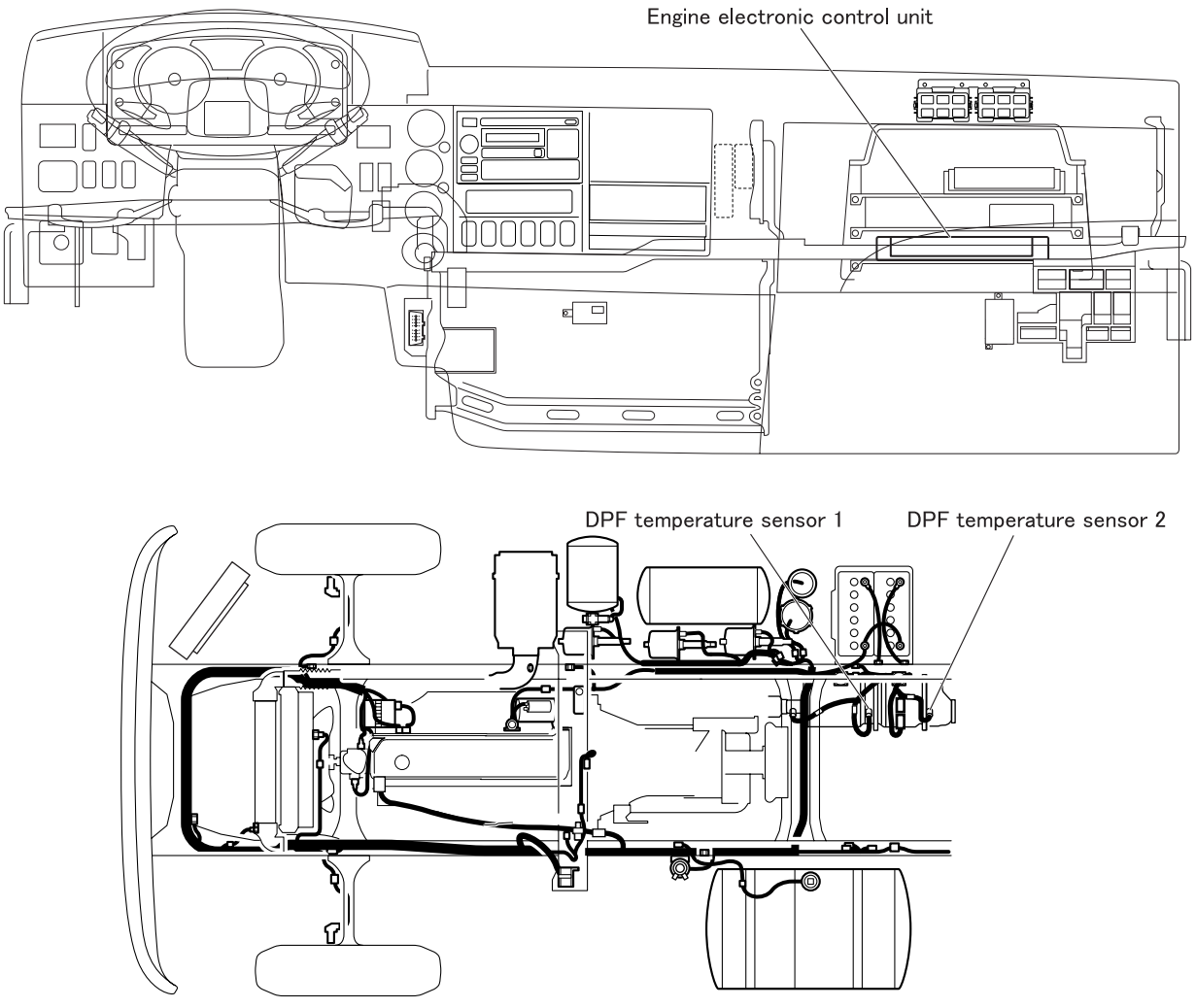

[Fault diagnosis]

- Perform checks in the sequence of the following steps.

Step 1	Inspection items		Inspection by control data
	Maintenance item		Measure item No. 29 “DPF Temperature 1 (inlet)” of Service Data.
	Inspection condition		While engine is warmed up
	Requirements		Temperature gradually rises up.
	Inspection result (Is the judging standard satisfied?)	YES	Go to transient fault (See Gr00.).
		NO	Go to step 2.

Step 2	Inspection items		Inspection by electronic control unit connector
	Maintenance item		Measure value of voltage between connector (GF34A) terminal No. 30 and (GF35A) terminal No.27.
	Inspection condition		• Starter switch: OFF • Disconnect electronic control unit from harness and measure at vehicle-side connector half.
	Requirements		• 20°C {68°F} : 241.8 kΩ • 50°C {122°F} : 106.2 $^{+74.3}_{-41.8}$ kΩ • 100°C {212°F} : 33.56 $^{+17.60}_{-10.60}$ kΩ • 150°C {302°F} : 13.90 $^{+5.36}_{-3.60}$ kΩ • 200°C {392°F} : 6.896 $^{+2.064}_{-1.252}$ kΩ
	Inspection result (Is the judging standard satisfied?)	YES	Go to step 3.
		NO	Go to step 4.

Step 3	Inspection items		Inspection of electronic control unit connector
	Maintenance item		Inspection of connector
	Inspection condition		–
	Requirements		• Connector is properly connected. • No trace of water entry is found. • No corrosion is found in terminal. • Connection to terminal is appropriate.
	Inspection result (Is the judging standard satisfied?)	YES	Go to step 8.
		NO	Modify connector.

Step 4	Inspection items		Inspection of sensor connector
	Maintenance item		Inspection of connector
	Inspection condition		–
	Requirements		• Connector is properly connected. • No trace of water entry is found. • No corrosion is found in terminal. • Connection to terminal is appropriate.
	Inspection result (Is the judging standard satisfied?)	YES	Go to step 5.
		NO	Modify connector.

Step 5	Inspection items		Inspection of DPF temperature sensor 1 unit
	Maintenance item		Measure value of resistance between connector terminal No. 1 and 2.
	Inspection condition		• Put DPF temperature sensor 1 in vessel filled with engine oil. • Heat the oil to each of the specified temperatures. Stir the oil well while doing so.
	Requirements		• 20°C {68°F}: 241.8 kΩ • 50°C {122°F}: 106.2 $^{+74.3}_{-41.8}$ kΩ • 100°C {212°F}: 33.56 $^{+17.60}_{-10.60}$ kΩ • 150°C {302°F}: 13.90 $^{+5.36}_{-3.60}$ kΩ • 200°C {392°F}: 6.896 $^{+2.064}_{-1.252}$ kΩ
	Inspection result (Is the judging standard satisfied?)	YES	Go to step 6.
		NO	Replacement of sensor

<Step 5 inspection diagram>

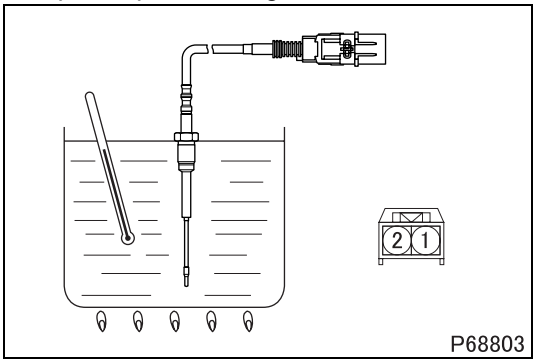

Step 6	Inspection items		Inspection of harness between electronic control unit and sensor (power supply)
	Maintenance item		Check circuit between electronic control unit connector (GF34A) terminal No. 30 and sensor connector terminal No. 1.
	Inspection condition		Disconnect each device from harness and measure from connection side of harness connector.
	Requirements		There is continuity.
	Inspection result (Is the judging standard satisfied?)	YES	Go to step 7.
		NO	Modify harness.

Step 7	Inspection items		Inspection of harness between electronic control unit and sensor (ground)
	Maintenance item		Check circuit between electronic control unit connector (GF35A) terminal No. 27 and sensor connector terminal No. 2.
	Inspection condition		Disconnect each device from harness and measure from connection side of harness connector.
	Requirements		There is continuity.
	Inspection result (Is the judging standard satisfied?)	YES	Go to step 8.
		NO	Modify harness.

Step 8	Inspection items		Inspection by control data
	Maintenance item		Measure item No. 29 “DPF Temperature 1 (inlet)” of Service Data.
	Inspection condition		While engine is warmed up
	Requirements		Temperature gradually rises up.
	Inspection result (Is the judging standard satisfied?)	YES	Go to transient fault (See Gr00.).
		NO	Replacement of electronic control unit

[Fault code]
Diagnosis code: P0562/Flash code: 79
[Monitor]
Abnormality of battery voltage
[Fault (outline)]
Low signal range check
[Diagnosis check]
- Power supply voltage in engine electronic control unit is monitored.

[Code generation condition]
- Voltage remains under 0.96 V for approx. 2.5 seconds.
  (Warning lamp is lit and diagnosis code is displayed on second establishment of code generation condition.)

[Diagnosis check timing]
- When code generation condition is established after starter switch ON

[Diagnostic requirement]
- 2 seconds passed after starter switch ON
- 2 seconds passed after cranking

[Control effected by electronic control unit during fault]
–
[Probable cause of trouble]
- Abnormality in electronic control unit (replacement of electronic control unit), battery voltage below 8 V

[Recoverability]
- Recovered if signal becomes normal with starter switch in ON position.

[Fault code]
Diagnosis code: P0563/Flash code: 79
[Monitor]
Abnormality of battery voltage
[Fault (outline)]
High signal range check
[Diagnosis check]
- Power supply voltage in engine electronic control unit is monitored.

[Code generation condition]
- Voltage remains over 1.8 V for approx. 2.5 seconds.
  (Warning lamp is lit and diagnosis code is displayed on second establishment of code generation condition.)

[Diagnosis check timing]
- When code generation condition is established after starter switch ON

[Diagnostic requirement]
- 2 seconds passed after starter switch ON
- 2 seconds passed after cranking

[Control effected by electronic control unit during fault]
–
[Probable cause of trouble]
- Abnormality in electronic control unit (replacement of electronic control unit), battery voltage above 15 V

[Recoverability]
<Control during fault>
- Recovered if signal becomes normal with starter switch in ON position.

<Warning lamp>
- Extinguished at 4th driving cycle after normal signal is input.

<Fault code>
- Automatically cleared at 40th warm up cycle after warning lamp is extinguished.
  (To clear as desired, erase from the memory.)

Driving cycle : “Starter switch ON to start engine till starter switch OFF” constitutes 1 driving cycle.
Warm up cycle : “Starter switch ON to start engine till starter switch OFF after coolant temperature increased and engine warmed up” constitutes 1 warm up cycle.

[Fault code]
Diagnosis code: P0600/Flash code: 64
[Monitor]
Abnormality in controller area network 1 communication (speed limitation device)
[Fault (outline)]
- Controller area network
- Message timeout

[Diagnosis check]
- Controller area network communication between engine electronic control unit and multifunction vehicle control unit is monitored for abnormality.

[Code generation condition]
Diagnosis code is generated under either of the following conditions. (Warning lamp is lit and diagnosis code is displayed on first establishment of code generation condition.)
- No controller area network signal is received from each multifunction vehicle control unit.
- Abnormal command controller are network signal is received from multifunction vehicle control unit.
- The combination of engine electronic control unit and multifunction vehicle control unit do not match.
- Abnormality of vehicle speed sensor

[Diagnosis check timing]
- When code generation condition is established after starter switch ON

[Diagnostic requirement]
- 2 seconds passed after starter switch ON
- 2 seconds passed after cranking
- Battery voltage: normal

[Control effected by electronic control unit during fault]
- Vehicle speed limiting control is suspended.

[Probable cause of trouble]
- Open-circuit or short-circuit of controller area network communication harness between engine electronic control unit and multifunction vehicle control unit
- Abnormality of each connector
- Abnormality of engine electronic control unit
- Abnormality of multifunction vehicle control unit
- Abnormality of controller area network resistor in engine electronic control unit
- Abnormality of controller area network resistor

[Recoverability]
<Control during fault>
- Recovered if signal becomes normal with starter switch in ON position.

<Warning lamp>
- Extinguished after input of normal signal.

<Fault code>
- If code recovered to normal, automatically cleared at 40th warm up cycle after warning lamp is lit.
  (To clear as desired, erase from the memory.)

Warm up cycle : “Starter switch ON to start engine till starter switch OFF after coolant temperature increased and engine warmed up” constitutes 1 warm up cycle.

[Electronic Control Unit Connection Diagram]

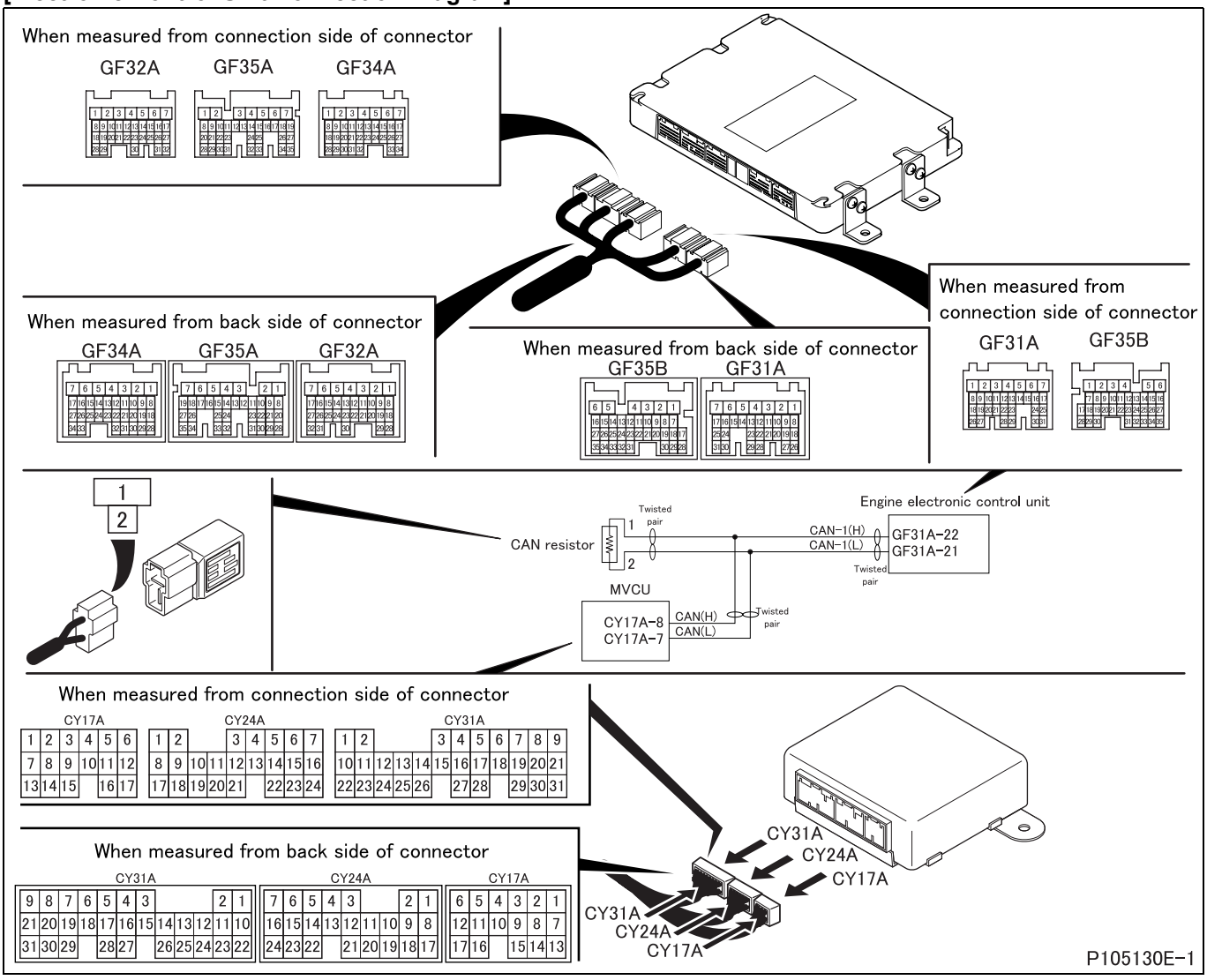

[Parts Identification and Location]

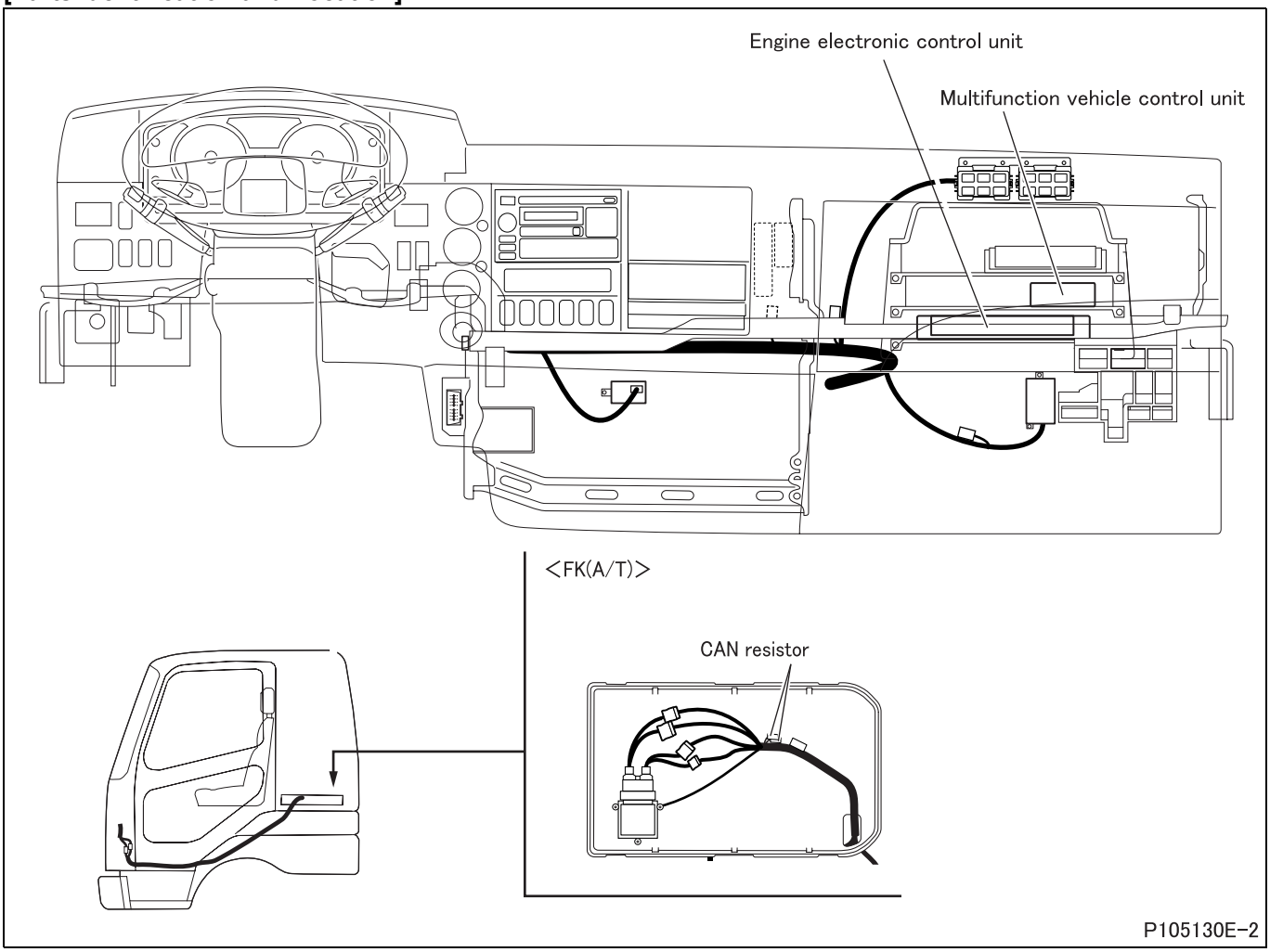

[Fault diagnosis]

- Perform checks in the sequence of the following steps.

Step 1	Inspection items		Inspection by engine electronic control unit connector
	Maintenance item		Measure value of resistance between engine electronic control unit connector (GF31A) terminal No. 21 and 22.
	Inspection condition		Disconnect each device from harness and measure from connection side of harness connector.
	Requirements		120 ± 6 Ω
	Inspection result (Is the judging standard satisfied?)	YES	Go to step 7.
		NO	Go to step 2.

Step 2	Inspection items		Inspection of controller area network resistor connector
	Maintenance item		Inspection of connector
	Inspection condition		–
	Requirements		• Connector is properly connected. • No trace of water entry is found. • No corrosion is found in terminal. • Connection to terminal is appropriate.
	Inspection result (Is the judging standard satisfied?)	YES	Go to step 3.
		NO	Modify connector.

Step 3	Inspection items		Inspection of controller area network resistor unit
	Maintenance item		Measure value of resistance between connector terminal No. 1 and 2.
	Inspection condition		Remove connector and measure resistance.
	Requirements		120 ± 6 Ω
	Inspection result (Is the judging standard satisfied?)	YES	Go to step 4.
		NO	Replacement of controller area network resistor

<Step 3 inspection diagram>

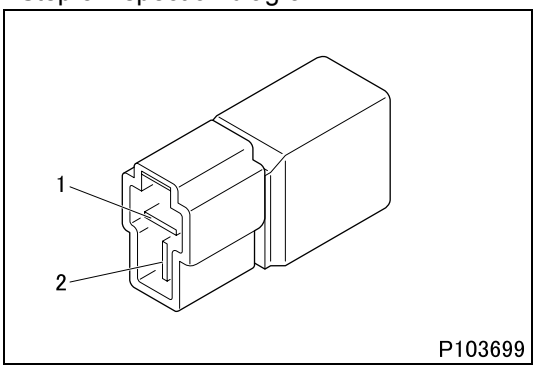

Step 4	Inspection items		Inspection of harness between engine electronic control unit and controller area network resistor (HIGH)
	Maintenance item		Check circuit between controller area network resistor connector terminal No. 1 and engine electronic control unit connector (GF31A) terminal No. 22.
	Inspection condition		Disconnect each device from harness and measure from connection side of harness connector.
	Requirements		There is continuity.
	Inspection result (Is the judging standard satisfied?)	YES	Go to step 5.
		NO	Modify harness.

Step 5	Inspection items		Inspection of harness between engine electronic control unit and controller area network resistor (LOW)
	Maintenance item		Check circuit between controller area network resistor connector terminal No. 2 and engine electronic control unit connector (GF31A) terminal No. 21.
	Inspection condition		Disconnect each device from harness and measure from connection side of harness connector.
	Requirements		There is continuity.
	Inspection result (Is the judging standard satisfied?)	YES	Go to step 6.
		NO	Modify harness.

Step 6	Inspection items		Inspection of electronic control unit connector
	Maintenance item		Inspection of connector
	Inspection condition		–
	Requirements		• Connector is properly connected. • No trace of water entry is found. • No corrosion is found in terminal. • Connection to terminal is appropriate.
	Inspection result (Is the judging standard satisfied?)	YES	Go to step 10.
		NO	Modify connector.

Step 7	Inspection items		Inspection of harness between multifunction vehicle control unit and controller area network resistor (HIGH)
	Maintenance item		Check circuit between controller area network resistor connector terminal No. 1 and multifunction vehicle control unit connector (CY17A) terminal No. 8.
	Inspection condition		Disconnect each device from harness and measure from connection side of harness connector.
	Requirements		There is continuity.
	Inspection result (Is the judging standard satisfied?)	YES	Go to step 8.
		NO	Modify harness.

Step 8	Inspection items		Inspection of harness between multifunction vehicle control unit and controller area network resistor (LOW)
	Maintenance item		Check circuit between controller area network resistor connector terminal No. 2 and multifunction vehicle control unit connector (CY17A) terminal No. 7.
	Inspection condition		Disconnect each device from harness and measure from connection side of harness connector.
	Requirements		There is continuity.
	Inspection result (Is the judging standard satisfied?)	YES	Go to step 9.
		NO	Modify harness.

Step 9	Inspection items		Inspection of multifunction vehicle control unit connector
	Maintenance item		Inspection of connector
	Inspection condition		–
	Requirements		• Connector is properly connected. • No trace of water entry is found. • No corrosion is found in terminal. • Connection to terminal is appropriate.
	Inspection result (Is the judging standard satisfied?)	YES	Replace the engine electronic control unit as well if this diagnosis code occurs after the replacement of multifunction vehicle control unit.
		NO	Modify connector.

[Fault code]
Diagnosis code: P0604/Flash code: 33
[Monitor]
Abnormality in engine electronic control unit
[Fault (outline)]
Hardware check
[Diagnosis check]
- Data processing function in engine electronic control unit is monitored.

[Code generation condition]
- Engine electronic control unit internal memory (RAM) is malfunctioning.
  (Warning lamp is lit and diagnosis code is displayed on first establishment of code generation condition.)

[Diagnosis check timing]
- When code generation condition is established after starter switch ON (with power ON)

[Diagnostic requirement]
- 2 seconds passed after starter switch ON
- 2 seconds passed after cranking
- Battery voltage: normal

[Control effected by electronic control unit during fault]
- Effects no special control.

[Probable cause of trouble]
- Abnormality in electronic control unit (replacement of electronic control unit)

[Recoverability]
<Control during fault>
- Recovered if signal becomes normal with starter switch in ON position.

<Warning lamp>
- Extinguished at 4th driving cycle after normal signal is input.

<Fault code>
- Automatically cleared at 40th warm up cycle after warning lamp is extinguished.
  (To clear as desired, erase from the memory.)

Driving cycle : “Starter switch ON to start engine till starter switch OFF” constitutes 1 driving cycle.
Warm up cycle : “Starter switch ON to start engine till starter switch OFF after coolant temperature increased and engine warmed up” constitutes 1 warm up cycle.

[Fault code]
Diagnosis code: P0605/Flash code: 33
[Monitor]
Abnormality in engine electronic control unit
[Fault (outline)]
Hardware check
[Diagnosis check]
- Data stored in engine electronic control unit is monitored for error.

[Code generation condition]
- Sum checking of Engine electronic control unit internal data is performed unsuccessfully.
  (Warning lamp is lit and diagnosis code is displayed on first establishment of code generation condition.)

[Diagnosis check timing]
- When code generation condition is established after starter switch ON

[Diagnostic requirement]
- Prerequisites for performing periodical sum checking are all met.

[Control effected by electronic control unit during fault]
- Common rail system is stopped (Engine is immediately stopped.).
- Fault detection for controller area network communication is stopped.

[Probable cause of trouble]
- Abnormality in electronic control unit (replacement of electronic control unit)

[Recoverability]
<Control during fault>
- Recovered if signal becomes normal when starter switch is turned OFF to ON (power supply resumed to electronic control unit).

<Warning lamp>
[Warning lamp: MIL (orange)]
- Extinguished at 4th driving cycle after normal signal is input.

[Warning lamp: Red]
- Extinguished on input of normal signal

<Fault code>
- Automatically cleared at 40th warm up cycle after warning lamp is extinguished.
  (To clear as desired, erase from the memory.)

Driving cycle : “Starter switch ON to start engine till starter switch OFF” constitutes 1 driving cycle.
Warm up cycle : “Starter switch ON to start engine till starter switch OFF after coolant temperature increased and engine warmed up” constitutes 1 warm up cycle.

[Fault code]
Diagnosis code: P0606/Flash code: 33
[Monitor]
Abnormality in engine electronic control unit
[Fault (outline)]
Hardware check
[Diagnosis check]
- Main CPU is checked for abnormal function.

[Code generation condition]
- Any signal showing abnormal function of main CPU is issued. (Warning lamp is lit and diagnosis code is displayed on first establishment of code generation condition.)

[Diagnosis check timing]
- When code generation condition is established after starter switch ON

[Diagnostic requirement]
- Power: ON

[Control effected by electronic control unit during fault]
- Common rail system is stopped (Engine is immediately stopped.).
- Fault detection for controller area network communication is stopped.

[Probable cause of trouble]
- Abnormality in electronic control unit (replacement of electronic control unit)

[Recoverability]
<Control during fault>
- Recovered if signal becomes normal when starter switch is turned OFF to ON (power supply resumed to electronic control unit).

<Warning lamp>
- Extinguished after input of normal signal.

<Fault code>
- To erase, execute Memory Clear.

[Fault code]
Diagnosis code: P0607/Flash code: 33
[Monitor]
Abnormality in engine electronic control unit
[Fault (outline)]
Hardware check
[Diagnosis check]
- Sub-CPU (for monitoring main CPU) is checked for abnormal function.

[Code generation condition]
- Any signal showing abnormal function of sub-CPU is issued.
  (Warning lamp is lit and diagnosis code is displayed on first establishment of code generation condition.)

[Diagnosis check timing]
- When code generation condition is established after starter switch ON

[Diagnostic requirement]
- Power: ON

[Control effected by electronic control unit during fault]
- Common rail system is stopped (Engine is immediately stopped.).
- Fault detection for controller area network communication is stopped

[Probable cause of trouble]
- Abnormality in electronic control unit (replacement of electronic control unit)

[Recoverability]
<Control during fault>
- Recovered if signal becomes normal when starter switch is turned OFF to ON (power supply resumed to electronic control unit).

<Warning lamp>
- Extinguished after input of normal signal.

<Fault code>
- If code recovered to normal, automatically cleared at 40th warm up cycle after warning lamp is lit.
  (To clear as desired, erase from the memory.)

Warm up cycle : “Starter switch ON to start engine till starter switch OFF after coolant temperature increased and engine warmed up” constitutes 1 warm up cycle.

[Fault code]
Diagnosis code: P0611/Flash code: 99
[Monitor]
Abnormality of injector adjustment data
[Fault (outline)]
Absence of code information
[Diagnosis check]
- Availability of stored injector adjustment data in engine electronic control unit is checked.

[Code generation condition]
- Injector adjustment data (absence of code information) remains missed for approx. 0.2 second.
  (Warning lamp is lit and diagnosis code is displayed on first establishment of code generation condition.)

[Diagnosis check timing]
- When code generation condition is established after starter switch ON

[Diagnostic requirement]
- Starter switch: ON
- Correction value: one stored in electronic control unit memory to be used

[Control effected by electronic control unit during fault]
–
[Probable cause of trouble]
- No injection correction data stored in engine electronic control unit
  (For data alteration/registration and data write operation, contact your nearest Mitsubishi FUSO Dealer or Mitsubishi FUSO Truck of America, Inc.)

[Recoverability]
<Control during fault>
- Recovered if signal becomes normal with starter switch in ON position.

<Warning lamp>
- Extinguished after input of normal signal.

<Fault code>
- To erase, execute Memory Clear.

[Fault code]
Diagnosis code: P0616/Flash code: 48
[Monitor]
Abnormality of safety relay
[Fault (outline)]
Short circuit battery
[Diagnosis check]
- Safety relay circuit is monitored for fault.

[Code generation condition]
- Safety relay circuit remains shorted to ground or open as detected for approx. 1 second.
  (Warning lamp is lit and diagnosis code is displayed on first establishment of code generation condition.)

[Diagnosis check timing]
- When code generation condition is established after starter switch ON

[Diagnostic requirement]
- Starter switch: ON
- Safety relay: active

[Control effected by electronic control unit during fault]
- Fault detection for controller are network communication is stopped.
- Starter continuous energization prevention control is stopped.

[Probable cause of trouble]
- Open-circuit or short-circuit of harness between electronic control unit and safety relay
- Abnormality of each connector
- Abnormality of safety relay
- Abnormality in electronic control unit

[Recoverability]
<Control during fault>
- Recovered if signal becomes normal with starter switch in ON position.

<Warning lamp>
- Extinguished after input of normal signal.

<Fault code>
- If code recovered to normal, automatically cleared at 40th warm up cycle after warning lamp is lit.
  (To clear as desired, erase from the memory.)

Warm up cycle : “Starter switch ON to start engine till starter switch OFF after coolant temperature increased and engine warmed up” constitutes 1 warm up cycle.

[Electronic Control Unit Connection Diagram]

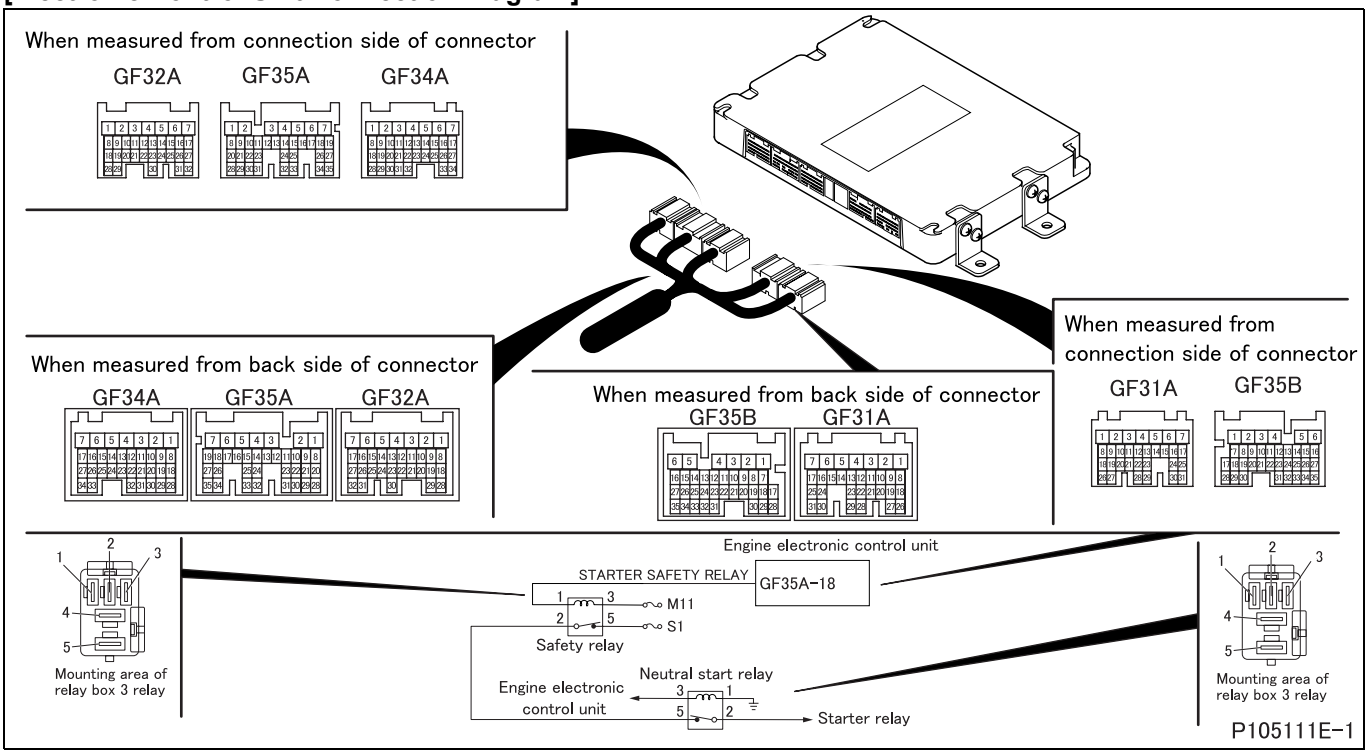

[Parts Identification and Location]

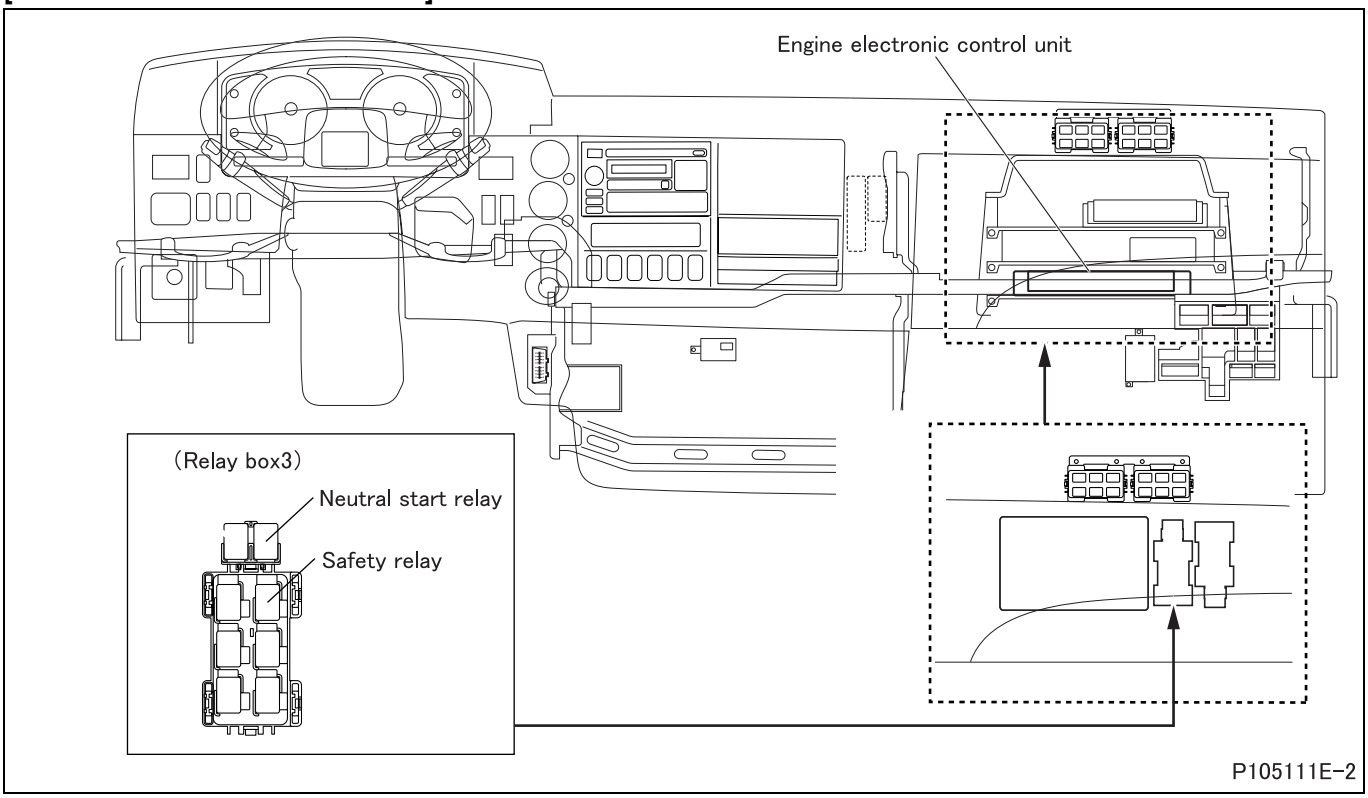

[Fault diagnosis]

- Perform checks in the sequence of the following steps.

Step 1	Inspection items		Inspection by control data
	Maintenance item		Perform actuator test item No. B1 “Starter Safety Relay”.
	Inspection condition		Starter switch: ON
	Requirements		Relay operation sound is noted (automatically reset after 6 seconds), or ON/OFF switching of Service Data: item No. 8F “Starter Safety Relay” is effected.
	Inspection result (Is the judging standard satisfied?)	YES	Go to transient fault (See Gr00.).
		NO	Go to step 2.

Step 2	Inspection items		Inspection of electronic control unit connector
	Maintenance item		Inspection of connector
	Inspection condition		–
	Requirements		• Connector is properly connected. • No trace of water entry is found. • No corrosion is found in terminal. • Connection to terminal is appropriate.
	Inspection result (Is the judging standard satisfied?)	YES	Go to step 3.
		NO	Modify connector.

Step 3	Inspection items		Inspection of relay connector
	Maintenance item		Inspection of connector
	Inspection condition		–
	Requirements		• Connector is properly connected. • No trace of water entry is found. • No corrosion is found in terminal. • Connection to terminal is appropriate.
	Inspection result (Is the judging standard satisfied?)	YES	Go to step 4.
		NO	Modify connector.

Step 4	Inspection items		Inspection of relay unit
	Maintenance item		Measure continuity between terminals No. 2 and 5 when relay operates.
	Inspection condition		Apply battery voltage across connector terminals No. 3 (+) and 1 (–).
	Requirements		There is no continuity.
	Inspection result (Is the judging standard satisfied?)	YES	Go to step 5.
		NO	Replacement of relay

<Step 4 inspection diagram>

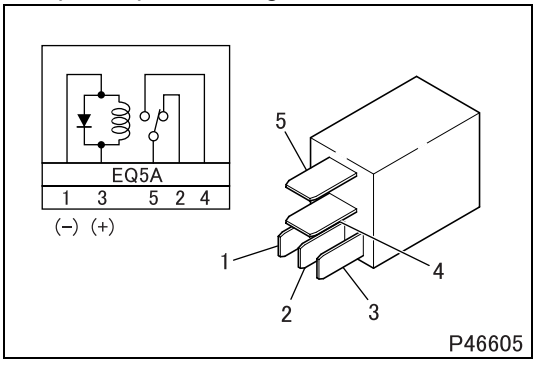

Step 5	Inspection items		Inspection of harness between relay and electronic control unit (ground)
	Maintenance item		Check circuit between relay connector terminal No. 1 and electronic control unit connector (GF35A) terminal No. 18.
	Inspection condition		Disconnect each device from harness and measure from connection side of harness connector.
	Requirements		There is continuity.
	Inspection result (Is the judging standard satisfied?)	YES	Go to step 6.
		NO	Modify harness.

Step 6	Inspection items		Inspection of harness between relay and electronic control unit (power supply)
	Maintenance item		Check circuit between relay connector terminal No. 3 and fuse (M11).
	Inspection condition		Disconnect each device from harness and measure from connection side of harness connector.
	Requirements		There is continuity.
	Inspection result (Is the judging standard satisfied?)	YES	Go to step 7.
		NO	Modify harness.

Step 7	Inspection items		Inspection by control data
	Maintenance item		Perform actuator test item No. B1 “Starter Safety Relay”.
	Inspection condition		Starter switch: ON
	Requirements		Relay operation sound is noted (automatically reset after 6 seconds), or ON/OFF switching of Service Data: item No. 8F “Starter Safety Relay” is effected.
	Inspection result (Is the judging standard satisfied?)	YES	Go to transient fault (See Gr00.).
		NO	Replacement of electronic control unit

[Fault code]
Diagnosis code: P0617/Flash code: 48
[Monitor]
Abnormality of safety relay
[Fault (outline)]
- Short circuit ground
- Open circuit

[Diagnosis check]
- Safety relay circuit is monitored for fault.

[Code generation condition]
- Safety relay circuit remains shorted to battery as detected for approx. 1 second.
  (Warning lamp is lit and diagnosis code is displayed on first establishment of code generation condition.)

[Diagnosis check timing]
- When code generation condition is established after starter switch ON

[Diagnostic requirement]
- 2 seconds passed after starter switch ON
- 2 seconds passed after cranking
- Battery voltage: normal
- Safety relay: inactive

[Control effected by electronic control unit during fault]
- Fault detection for controller area network communication is stopped.

[Probable cause of trouble]
- Open-circuit or short-circuit of harness between electronic control unit and safety relay
- Abnormality of each connector
- Abnormality of safety relay
- Abnormality in electronic control unit

[Recoverability]
<Control during fault>
- Recovered if signal becomes normal with starter switch in ON position.

<Warning lamp>
- Extinguished after input of normal signal.

<Fault code>
- If code recovered to normal, automatically cleared at 40th warm up cycle after warning lamp is lit.
  (To clear as desired, erase from the memory.)

Warm up cycle : “Starter switch ON to start engine till starter switch OFF after coolant temperature increased and engine warmed up” constitutes 1 warm up cycle.

[Electronic Control Unit Connection Diagram]

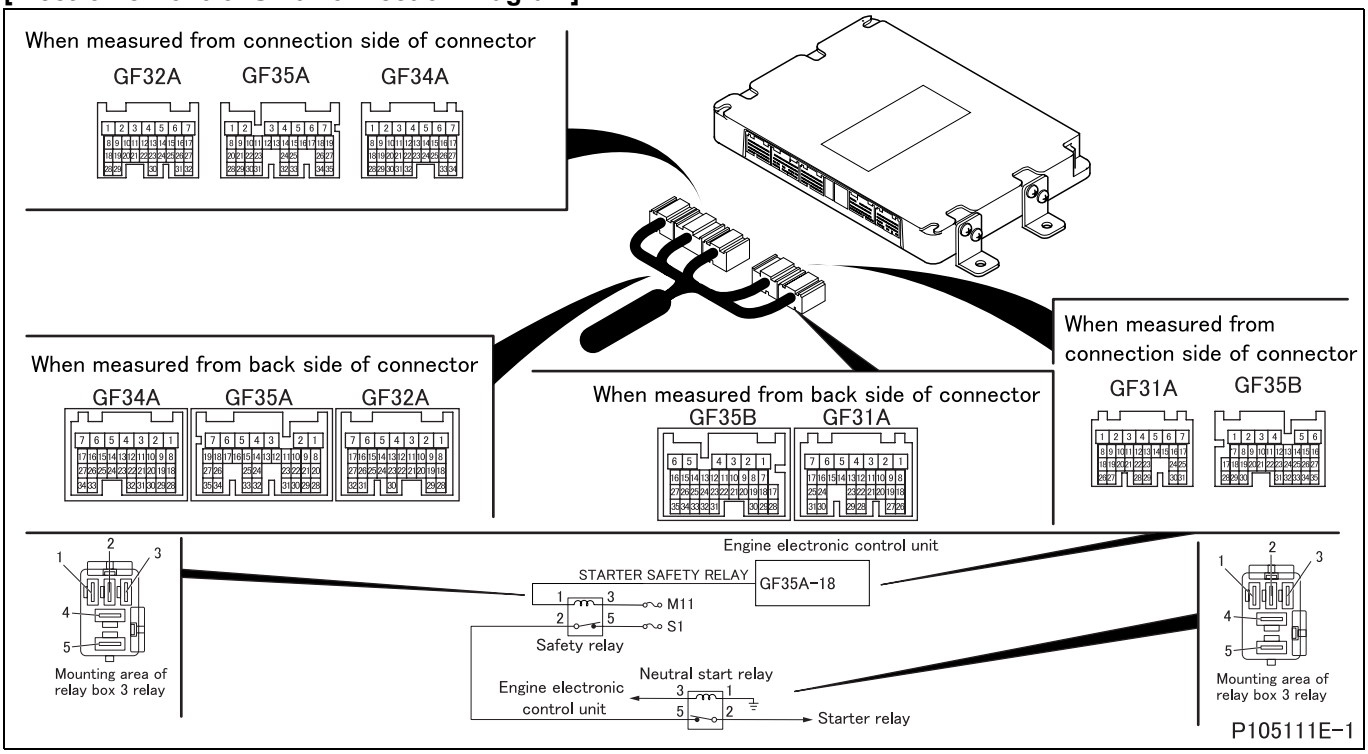

[Parts Identification and Location]

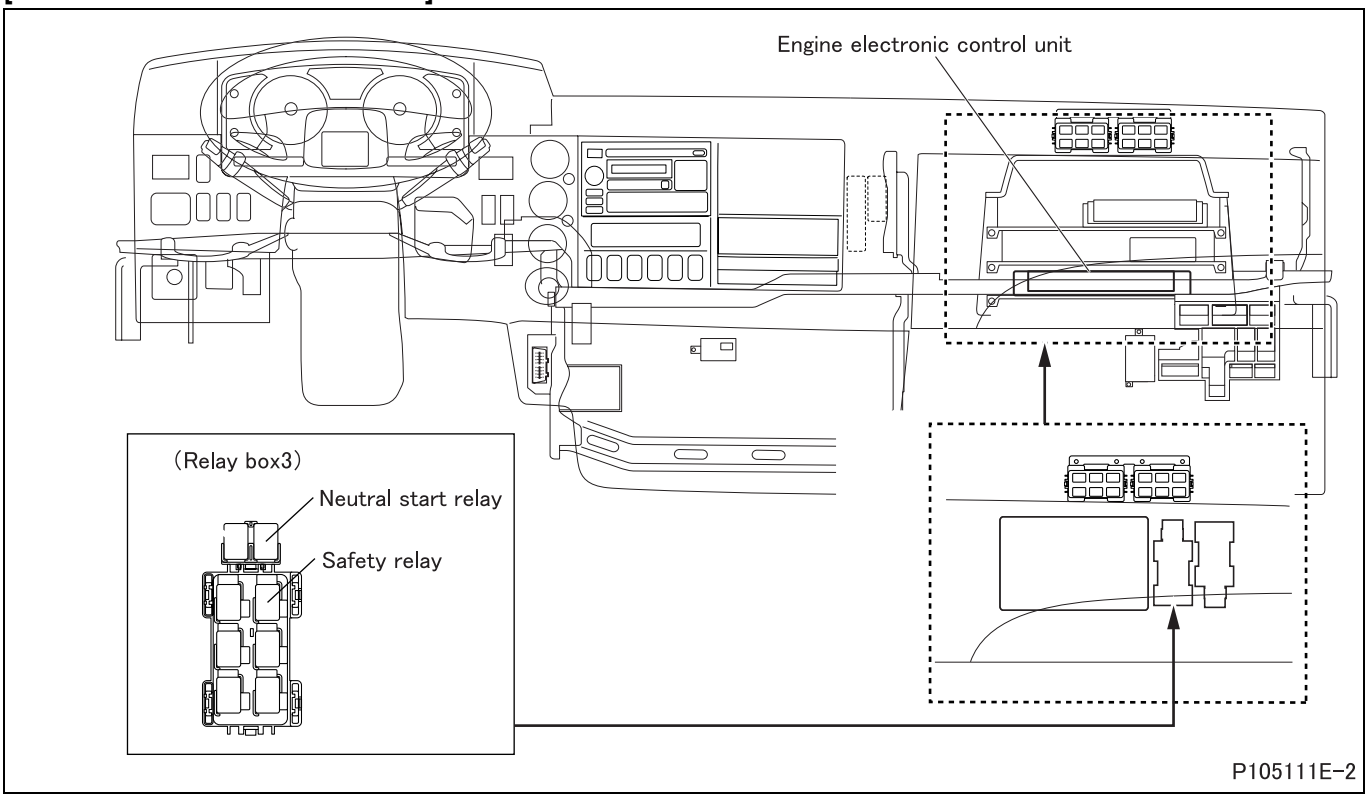

[Fault diagnosis]

- Perform checks in the sequence of the following steps.

Step 1	Inspection items		Inspection by control data
	Maintenance item		Perform actuator test item No. B1 “Starter Safety Relay”.
	Inspection condition		Starter switch: ON
	Requirements		Relay operation sound is noted (automatically reset after 6 seconds), or ON/OFF switching of Service Data: item No. 8F “Starter Safety Relay” is effected.
	Inspection result (Is the judging standard satisfied?)	YES	Go to transient fault (See Gr00.).
		NO	Go to step 2.

Step 2	Inspection items		Inspection of electronic control unit connector
	Maintenance item		Inspection of connector
	Inspection condition		–
	Requirements		• Connector is properly connected. • No trace of water entry is found. • No corrosion is found in terminal. • Connection to terminal is appropriate.
	Inspection result (Is the judging standard satisfied?)	YES	Go to step 3.
		NO	Modify connector.

Step 3	Inspection items		Inspection of relay connector
	Maintenance item		Inspection of connector
	Inspection condition		–
	Requirements		• Connector is properly connected. • No trace of water entry is found. • No corrosion is found in terminal. • Connection to terminal is appropriate.
	Inspection result (Is the judging standard satisfied?)	YES	Go to step 4.
		NO	Modify connector.

Step 4	Inspection items		Inspection of relay unit
	Maintenance item		Measure continuity between terminals No. 2 and 5 when relay operates.
	Inspection condition		Apply battery voltage across connector terminals No. 3 (+) and 1 (–).
	Requirements		There is no continuity.
	Inspection result (Is the judging standard satisfied?)	YES	Go to step 5.
		NO	Replacement of relay

<Step 4 inspection diagram>

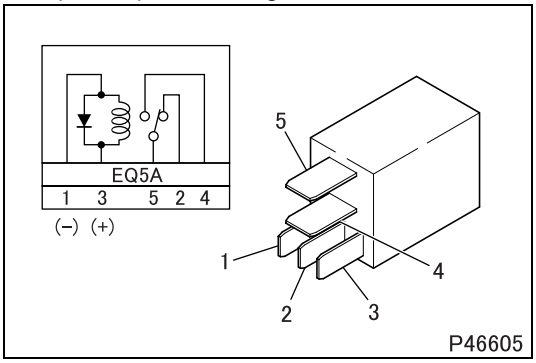

Step 5	Inspection items		Inspection of harness between relay and electronic control unit (ground)
	Maintenance item		Check circuit between relay connector terminal No. 1 and electronic control unit connector (GF35A) terminal No. 18.
	Inspection condition		Disconnect each device from harness and measure from connection side of harness connector.
	Requirements		There is continuity.
	Inspection result (Is the judging standard satisfied?)	YES	Go to step 6.
		NO	Modify harness.

Step 6	Inspection items		Inspection of harness between relay and electronic control unit (power supply)
	Maintenance item		Check circuit between relay connector terminal No. 3 and fuse (M11).
	Inspection condition		Disconnect each device from harness and measure from connection side of harness connector.
	Requirements		There is continuity.
	Inspection result (Is the judging standard satisfied?)	YES	Go to step 7.
		NO	Modify harness.

Step 7	Inspection items		Inspection by control data
	Maintenance item		Perform actuator test item No. B1 “Starter Safety Relay”.
	Inspection condition		Starter switch: ON
	Requirements		Relay operation sound is noted (automatically reset after 6 seconds), or ON/OFF switching of Service Data: item No. 8F “Starter Safety Relay” is effected.
	Inspection result (Is the judging standard satisfied?)	YES	Go to transient fault (See Gr00.).
		NO	Replacement of electronic control unit

[Fault code]
Diagnosis code: P062B/Flash code: 99
[Monitor]
Abnormality of injector adjustment data
[Fault (outline)]
Error in code information (Adjustment point error)
[Diagnosis check]
- Availability of stored injector adjustment data in engine electronic control unit is checked.

[Code generation condition]
- Abnormality of injector adjustment data or improper adjustment point data (error in code information) remains as detected for approx. 0.2 second.
  (Warning lamp is lit and diagnosis code is displayed on first establishment of code generation condition.)

[Diagnosis check timing]
- When code generation condition is established after starter switch ON

[Diagnostic requirement]
- Starter switch: ON

[Control effected by electronic control unit during fault]
- Control is effected without injector adjustment data.

[Probable cause of trouble]
- No injection correction data stored in engine electronic control unit
  (For data alteration/registration and data write operation, contact your nearest Mitsubishi FUSO Dealer or Mitsubishi FUSO Truck of America, Inc.)

[Recoverability]
<Control during fault>
- Recovered if signal becomes normal with starter switch in ON position.

<Warning lamp>
- Extinguished after input of normal signal.

<Fault code>
- If code recovered to normal, automatically cleared at 40th warm up cycle after warning lamp is lit.
  (To clear as desired, erase from the memory.)

Warm up cycle : “Starter switch ON to start engine till starter switch OFF after coolant temperature increased and engine warmed up” constitutes 1 warm up cycle.

[Fault code]
Diagnosis code: P062F/Flash code: 33
[Monitor]
Abnormality in engine electronic control unit
[Fault (outline)]
Hardware check (EEPROM)
[Diagnosis check]
- Memory circuit inside engine electronic control unit is checked for abnormal function.

[Code generation condition]
- Any error is found in data read out from engine electronic control unit internal memory.

[Diagnosis check timing]
- When code generation condition is established after starter switch ON

[Diagnostic requirement]
- 2 seconds passed after starter switch ON
- 2 seconds passed after cranking
- Battery voltage: normal

[Control effected by electronic control unit during fault]
- Effects no special control.

[Probable cause of trouble]
- Abnormality in electronic control unit (replacement of electronic control unit)

[Recoverability]
<Control during fault>
- Recovered if signal becomes normal when starter switch is turned OFF to ON (power supply resumed to electronic control unit).

<Warning lamp>
- Extinguished at 4th driving cycle after normal signal is input.

<Fault code>
- Automatically cleared at 40th warm up cycle after warning lamp is extinguished.
  (To clear as desired, erase from the memory.)

Driving cycle : “Starter switch ON to start engine till starter switch OFF” constitutes 1 driving cycle.
Warm up cycle : “Starter switch ON to start engine till starter switch OFF after coolant temperature increased and engine warmed up” constitutes 1 warm up cycle.

[Fault code]
Diagnosis code: P0642/Flash code: 81
[Monitor]
Abnormality of sensor supply voltage 1
[Fault (outline)]
Low signal range check
[Diagnosis check]
- Sensor supply voltage 1 in engine electronic control unit is monitored.
- Units served by sensor supply 1
  - Common rail pressure sensor
  - Accelerator pedal position sensor (sensor 1)
  - DPF absolute pressure sensor
  - DPF pressure sensor (DIFF)

[Code generation condition]
- Supply voltage to units remain below 4 V for 0.03 second.
  (Warning lamp is lit and diagnosis code is displayed on first establishment of code generation condition.)

[Diagnosis check timing]
- When code generation condition is established after starter switch ON

[Diagnostic requirement]
- 2 seconds passed after starter switch ON
- 2 seconds passed after cranking
- Battery voltage: normal

[Control effected by electronic control unit during fault]
- Effects no special control.

[Probable cause of trouble]
- Open-circuit or short-circuit of harness between electronic control unit and each sensor
- Abnormality of each connector
- Abnormality of each sensor
- Abnormality in electronic control unit

[Recoverability]
<Control during fault>
- Recovered if signal becomes normal with starter switch in ON position.

<Warning lamp>
- Extinguished at 4th driving cycle after normal signal is input.

<Fault code>
- Automatically cleared at 40th warm up cycle after warning lamp is extinguished.
  (To clear as desired, erase from the memory.)

Driving cycle : “Starter switch ON to start engine till starter switch OFF” constitutes 1 driving cycle.
Warm up cycle : “Starter switch ON to start engine till starter switch OFF after coolant temperature increased and engine warmed up” constitutes 1 warm up cycle.

[Electronic Control Unit Connection Diagram]

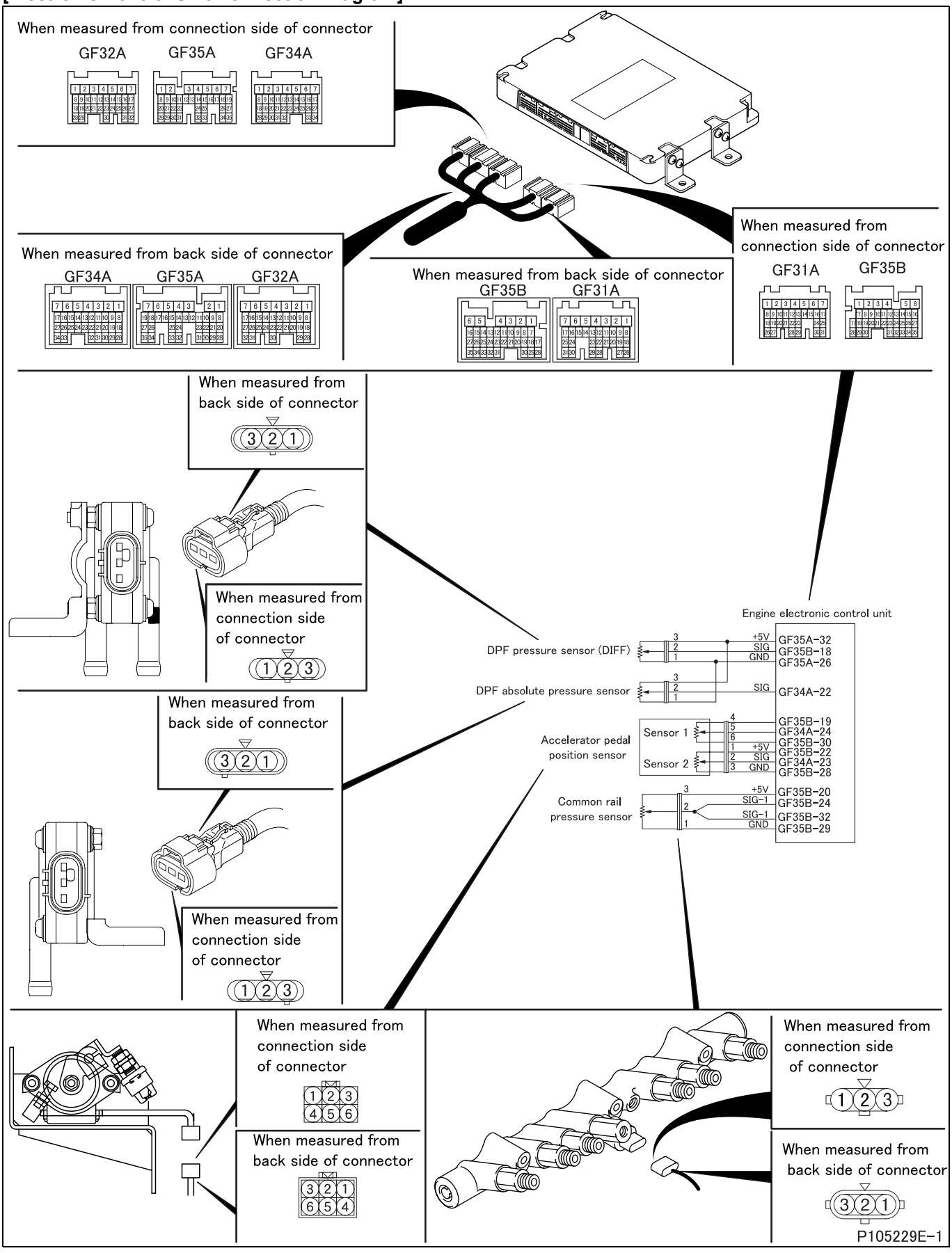

[Parts Identification and Location]

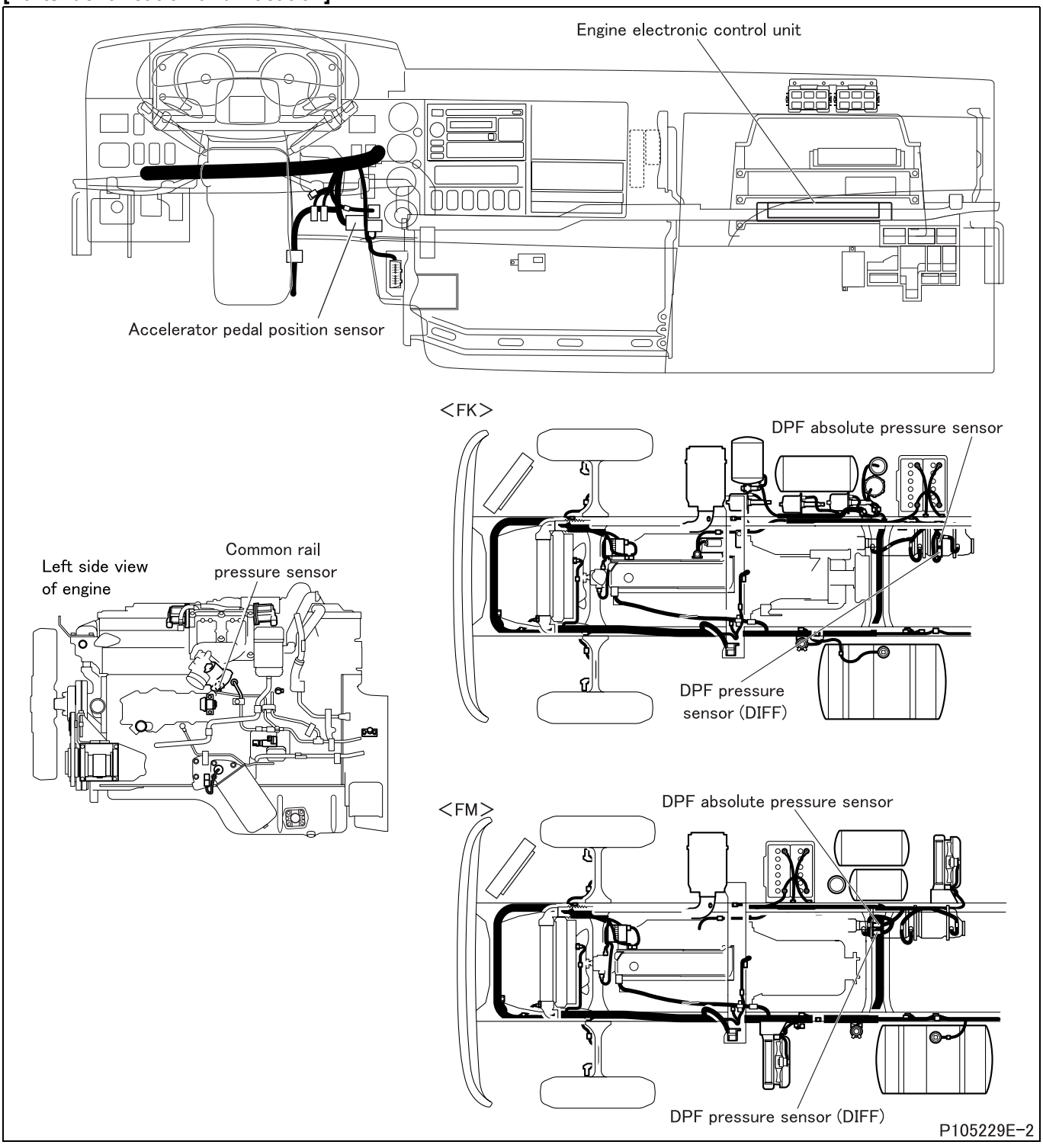

[Fault diagnosis]

- Perform checks in the sequence of the following steps.

Step 1	Inspection items		Inspection of electronic control unit connector
	Maintenance item		Inspection of connector
	Inspection condition		–
	Requirements		• Connector is properly connected. • No trace of water entry is found. • No corrosion is found in terminal. • Connection to terminal is appropriate.
	Inspection result (Is the judging standard satisfied?)	YES	Go to step 2.
		NO	Modify connector.

Step 2	Inspection items		Inspection by electronic control unit connector (power supply): common rail pressure sensor
	Maintenance item		Measure value of voltage between connector (GF35B) terminal No. 20 (+) and No. 29 (–).
	Inspection condition		• Measure from back side of connector of harness with each device connected to harness. • Starter switch: ON
	Requirements		5 V
	Inspection result (Is the judging standard satisfied?)	YES	Go to step 5.
		NO	Go to step 3.

Step 3	Inspection items		Inspection of common rail pressure sensor connector
	Maintenance item		Inspection of connector
	Inspection condition		–
	Requirements		• Connector is properly connected. • No trace of water entry is found. • No corrosion is found in terminal. • Connection to terminal is appropriate.
	Inspection result (Is the judging standard satisfied?)	YES	Go to step 4.
		NO	Modify connector.

Step 4	Inspection items		Inspection of harness between electronic control unit and common rail pressure sensor (power supply)
	Maintenance item		Check circuit between common rail pressure sensor connector terminal No. 3 and electronic control unit connector (GF35B) terminal No. 20.
	Inspection condition		Disconnect each device from harness and measure from connection side of harness connector.
	Requirements		There is continuity.
	Inspection result (Is the judging standard satisfied?)	YES	Go to step 5.
		NO	Modify harness.

Step 5	Inspection items		Inspection by electronic control unit connector (power supply): accelerator pedal position sensor (sensor 1)
	Maintenance item		Measure value of voltage between connector (GF35B) terminal No. 19 (+) and No. 30 (–).
	Inspection condition		• Measure from back side of connector of harness with each device connected to harness. • Starter switch: ON
	Requirements		5 V
	Inspection result (Is the judging standard satisfied?)	YES	Go to step 8.
		NO	Go to step 6.

Step 6	Inspection items		Inspection of accelerator pedal position sensor (sensor 1) connector
	Maintenance item		Inspection of connector
	Inspection condition		–
	Requirements		• Connector is properly connected. • No trace of water entry is found. • No corrosion is found in terminal. • Connection to terminal is appropriate.
	Inspection result (Is the judging standard satisfied?)	YES	Go to step 7.
		NO	Modify connector.

Step 7	Inspection items		Inspection of harness between electronic control unit and accelerator pedal position sensor (sensor 1) (power supply)
	Maintenance item		Check circuit between accelerator pedal position sensor (sensor 1) connector terminal No. 4 and electronic control unit connector (GF35B) terminal No. 19.
	Inspection condition		Disconnect each device from harness and measure from connection side of harness connector.
	Requirements		There is continuity.
	Inspection result (Is the judging standard satisfied?)	YES	Go to step 8.
		NO	Modify harness.

Step 8	Inspection items		Inspection by electronic control unit connector: DPF absolute pressure sensor
	Maintenance item		Measure value of voltage between connector (GF35A) terminal No. 32 (+) and No. 26 (–).
	Inspection condition		• Measure from back side of connector of harness with each device connected to harness. • Starter switch: ON
	Requirements		5 V
	Inspection result (Is the judging standard satisfied?)	YES	Go to transient fault (See Gr00.).
		NO	Go to step 9.

Step 9	Inspection items		Inspection of DPF absolute pressure sensor connector
	Maintenance item		Inspection of connector
	Inspection condition		–
	Requirements		• Connector is properly connected. • No trace of water entry is found. • No corrosion is found in terminal. • Connection to terminal is appropriate.
	Inspection result (Is the judging standard satisfied?)	YES	Go to step 10.
		NO	Modify connector.

Step 10	Inspection items		Inspection of harness between electronic control unit and DPF absolute pressure sensor (power supply)
	Maintenance item		Check circuit between DPF absolute pressure sensor connector terminal No. 3 and electronic control unit connector (GF35A) terminal No. 32.
	Inspection condition		Disconnect each device from harness and measure from connection side of harness connector.
	Requirements		There is continuity.
	Inspection result (Is the judging standard satisfied?)	YES	Go to step 11.
		NO	Modify harness.

Step 11	Inspection items		Inspection by electronic control unit connector: DPF pressure sensor (DIFF)
	Maintenance item		Measure value of voltage between connector (GF35A) terminal No. 32 (+) and No. 26 (–).
	Inspection condition		• Measure from back side of connector of harness with each device connected to harness. • Starter switch: ON
	Requirements		5 V
	Inspection result (Is the judging standard satisfied?)	YES	Go to transient fault (See Gr00.).
		NO	Go to step 12.

Step 12	Inspection items		Inspection of DPF pressure sensor (DIFF) connector
	Maintenance item		Inspection of connector
	Inspection condition		–
	Requirements		• Connector is properly connected. • No trace of water entry is found. • No corrosion is found in terminal. • Connection to terminal is appropriate.
	Inspection result (Is the judging standard satisfied?)	YES	Go to step 13.
		NO	Modify connector.

Step 13	Inspection items		Inspection of harness between electronic control unit and DPF pressure sensor (DIFF) (power supply)
	Maintenance item		Check circuit between DPF pressure sensor (DIFF) connector terminal No. 3 and electronic control unit connector (GF35A) terminal No. 32.
	Inspection condition		Disconnect each device from harness and measure from connection side of harness connector.
	Requirements		There is continuity.
	Inspection result (Is the judging standard satisfied?)	YES	Replacement of electronic control unit
		NO	Modify harness.

[Fault code]
Diagnosis code: P0643/Flash code: 81
[Monitor]
Abnormality of sensor supply voltage 1
[Fault (outline)]
High signal range check
[Diagnosis check]
- Sensor supply voltage 1 in engine electronic control unit is monitored.
- Units served by sensor supply 1
- Common rail pressure sensor
- Accelerator pedal position sensor (sensor 1)
- DPF absolute pressure sensor
- DPF pressure sensor (DIFF)

[Code generation condition]
- Supply voltage to units remain over 6 V for 0.03 second. (Warning lamp is lit and diagnosis code is displayed on first establishment of code generation condition.)

[Diagnosis check timing]
- When code generation condition is established after starter switch ON

[Diagnostic requirement]
- 2 seconds passed after starter switch ON
- 2 seconds passed after cranking
- Battery voltage: normal

[Control effected by electronic control unit during fault]
- Effects no special control.

[Probable cause of trouble]
- Open-circuit or short-circuit of harness between electronic control unit and each sensor
- Abnormality of each connector
- Abnormality of each sensor
- Abnormality in electronic control unit

[Recoverability]
<Control during fault>
- Recovered if signal becomes normal with starter switch in ON position.

<Warning lamp>
- Extinguished at 4th driving cycle after normal signal is input.

<Fault code>
- Automatically cleared at 40th warm up cycle after warning lamp is extinguished.
  (To clear as desired, erase from the memory.)

Driving cycle : “Starter switch ON to start engine till starter switch OFF” constitutes 1 driving cycle.
Warm up cycle : “Starter switch ON to start engine till starter switch OFF after coolant temperature increased and engine warmed up” constitutes 1 warm up cycle.

[Electronic Control Unit Connection Diagram]

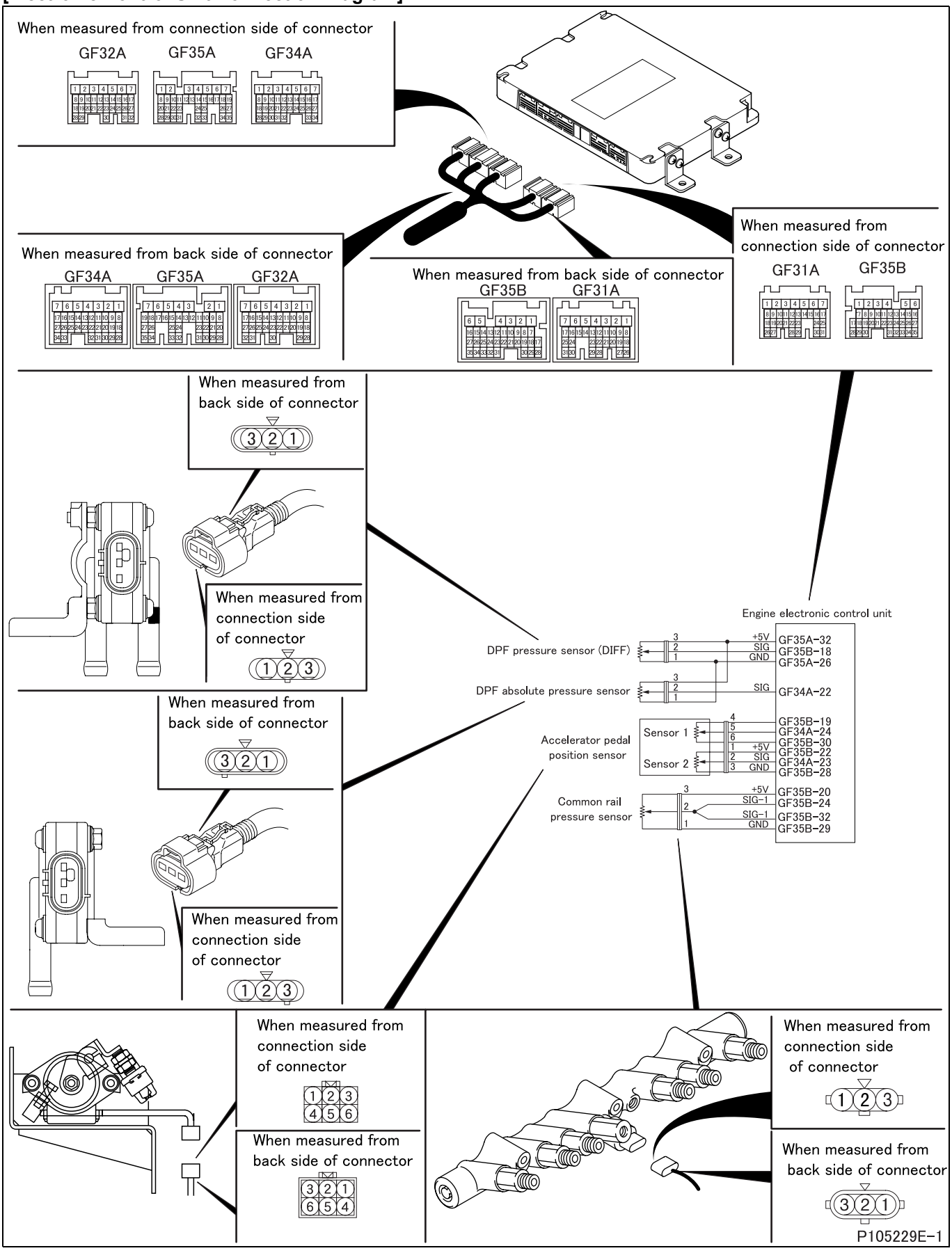

[Parts Identification and Location]

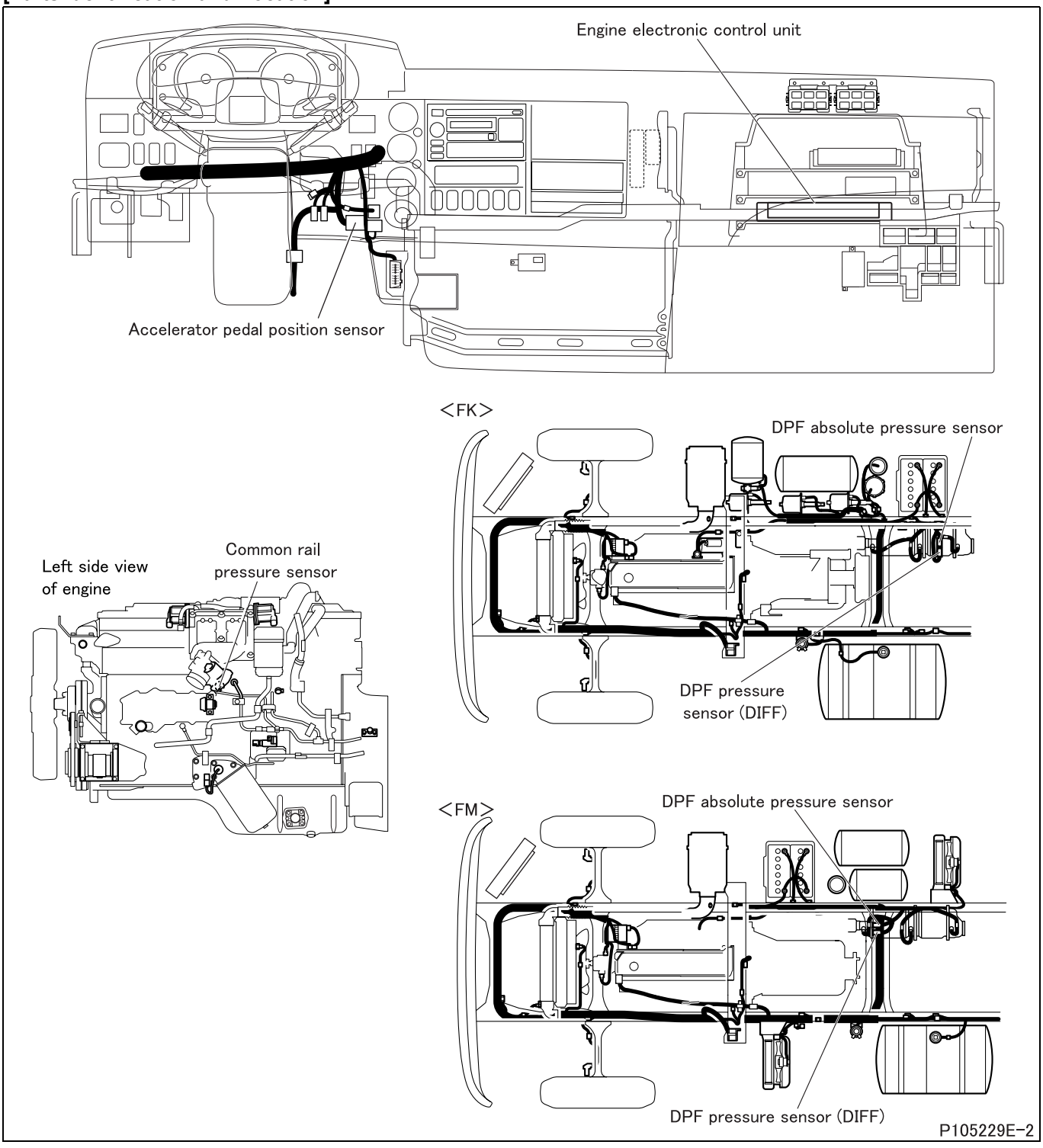

[Fault diagnosis]

- Perform checks in the sequence of the following steps.

Step 1	Inspection items		Inspection of electronic control unit connector
	Maintenance item		Inspection of connector
	Inspection condition		–
	Requirements		• Connector is properly connected. • No trace of water entry is found. • No corrosion is found in terminal. • Connection to terminal is appropriate.
	Inspection result (Is the judging standard satisfied?)	YES	Go to step 2.
		NO	Modify connector.

Step 2	Inspection items		Inspection by electronic control unit connector (power supply): common rail pressure sensor
	Maintenance item		Measure value of voltage between connector (GF35B) terminal No. 20 (+) and No. 29 (–).
	Inspection condition		• Measure from back side of connector of harness with each device connected to harness. • Starter switch: ON
	Requirements		5 V
	Inspection result (Is the judging standard satisfied?)	YES	Go to step 5.
		NO	Go to step 3.

Step 3	Inspection items		Inspection of common rail pressure sensor connector
	Maintenance item		Inspection of connector
	Inspection condition		–
	Requirements		• Connector is properly connected. • No trace of water entry is found. • No corrosion is found in terminal. • Connection to terminal is appropriate.
	Inspection result (Is the judging standard satisfied?)	YES	Go to step 4.
		NO	Modify connector.

Step 4	Inspection items		Inspection of harness between electronic control unit and common rail pressure sensor (power supply)
	Maintenance item		Check circuit between common rail pressure sensor connector terminal No. 3 and electronic control unit connector (GF35B) terminal No. 20.
	Inspection condition		Disconnect each device from harness and measure from connection side of harness connector.
	Requirements		There is continuity.
	Inspection result (Is the judging standard satisfied?)	YES	Go to step 5.
		NO	Modify harness.

Step 5	Inspection items		Inspection by electronic control unit connector (power supply): accelerator pedal position sensor (sensor 1)
	Maintenance item		Measure value of voltage between connector (GF35B) terminal No. 19 (+) and No. 30 (–).
	Inspection condition		• Measure from back side of connector of harness with each device connected to harness. • Starter switch: ON
	Requirements		5 V
	Inspection result (Is the judging standard satisfied?)	YES	Go to step 8.
		NO	Go to step 6.

Step 6	Inspection items		Inspection of accelerator pedal position sensor (sensor 1) connector
	Maintenance item		Inspection of connector
	Inspection condition		–
	Requirements		• Connector is properly connected. • No trace of water entry is found. • No corrosion is found in terminal. • Connection to terminal is appropriate.
	Inspection result (Is the judging standard satisfied?)	YES	Go to step 7.
		NO	Modify connector.

Step 7	Inspection items		Inspection of harness between electronic control unit and accelerator pedal position sensor (sensor 1) (power supply)
	Maintenance item		Check circuit between accelerator pedal position sensor (sensor 1) connector terminal No. 4 and electronic control unit connector (GF35B) terminal No. 19.
	Inspection condition		Disconnect each device from harness and measure from connection side of harness connector.
	Requirements		There is continuity.
	Inspection result (Is the judging standard satisfied?)	YES	Go to step 8.
		NO	Modify harness.

Step 8	Inspection items		Inspection by electronic control unit connector: DPF absolute pressure sensor
	Maintenance item		Measure value of voltage between connector (GF35A) terminal No. 32 (+) and No. 26 (–).
	Inspection condition		• Measure from back side of connector of harness with each device connected to harness. • Starter switch: ON
	Requirements		5 V
	Inspection result (Is the judging standard satisfied?)	YES	Go to transient fault (See Gr00.).
		NO	Go to step 9.

Step 9	Inspection items		Inspection of DPF absolute pressure sensor connector
	Maintenance item		Inspection of connector
	Inspection condition		–
	Requirements		• Connector is properly connected. • No trace of water entry is found. • No corrosion is found in terminal. • Connection to terminal is appropriate.
	Inspection result (Is the judging standard satisfied?)	YES	Go to step 10.
		NO	Modify connector.

Step 10	Inspection items		Inspection of harness between electronic control unit and DPF absolute pressure sensor (power supply)
	Maintenance item		Check circuit between DPF absolute pressure sensor connector terminal No. 3 and electronic control unit connector (GF35A) terminal No. 32.
	Inspection condition		Disconnect each device from harness and measure from connection side of harness connector.
	Requirements		There is continuity.
	Inspection result (Is the judging standard satisfied?)	YES	Go to step 11.
		NO	Modify harness.

Step 11	Inspection items		Inspection by electronic control unit connector: DPF pressure sensor (DIFF)
	Maintenance item		Measure value of voltage between connector (GF35A) terminal No. 32 (+) and No. 26 (–).
	Inspection condition		• Measure from back side of connector of harness with each device connected to harness. • Starter switch: ON
	Requirements		5 V
	Inspection result (Is the judging standard satisfied?)	YES	Go to transient fault (See Gr00.).
		NO	Go to step 12.

Step 12	Inspection items		Inspection of DPF pressure sensor (DIFF) connector
	Maintenance item		Inspection of connector
	Inspection condition		–
	Requirements		• Connector is properly connected. • No trace of water entry is found. • No corrosion is found in terminal. • Connection to terminal is appropriate.
	Inspection result (Is the judging standard satisfied?)	YES	Go to step 13.
		NO	Modify connector.

Step 13	Inspection items		Inspection of harness between electronic control unit and DPF pressure sensor (DIFF) (power supply)
	Maintenance item		Check circuit between DPF pressure sensor (DIFF) connector terminal No. 3 and electronic control unit connector (GF35A) terminal No. 32.
	Inspection condition		Disconnect each device from harness and measure from connection side of harness connector.
	Requirements		There is continuity.
	Inspection result (Is the judging standard satisfied?)	YES	Replacement of electronic control unit
		NO	Modify harness.

[Fault code]
Diagnosis code: P0652/Flash code: 81
[Monitor]
Abnormality of sensor supply voltage 2
[Fault (outline)]
Low signal range check
[Diagnosis check]
- Sensor supply voltage 2 in engine electronic control unit is monitored.
- Units served by sensor supply 2
  - Accelerator pedal position sensor (sensor 2)
  - Boost pressure sensor

[Code generation condition]
- Supply voltage to units remain below 4 V for 0.03 second.
  (Warning lamp is lit and diagnosis code is displayed on first establishment of code generation condition.)

[Diagnosis check timing]
- When code generation condition is established after starter switch ON

[Diagnostic requirement]
- 2 seconds passed after starter switch ON
- 2 seconds passed after cranking
- Battery voltage: normal

[Control effected by electronic control unit during fault]
- Effects no special control.

[Probable cause of trouble]
- Open-circuit or short-circuit of harness between electronic control unit and each sensor
- Abnormality of each connector
- Abnormality of each sensor
- Abnormality in electronic control unit

[Recoverability]
<Control during fault>
- Recovered if signal becomes normal with starter switch in ON position.

<Warning lamp>
- Extinguished at 4th driving cycle after normal signal is input.

<Fault code>
- Automatically cleared at 40th warm up cycle after warning lamp is extinguished.
  (To clear as desired, erase from the memory.)

Driving cycle : “Starter switch ON to start engine till starter switch OFF” constitutes 1 driving cycle.
Warm up cycle : “Starter switch ON to start engine till starter switch OFF after coolant temperature increased and engine warmed up” constitutes 1 warm up cycle.

[Electronic Control Unit Connection Diagram]

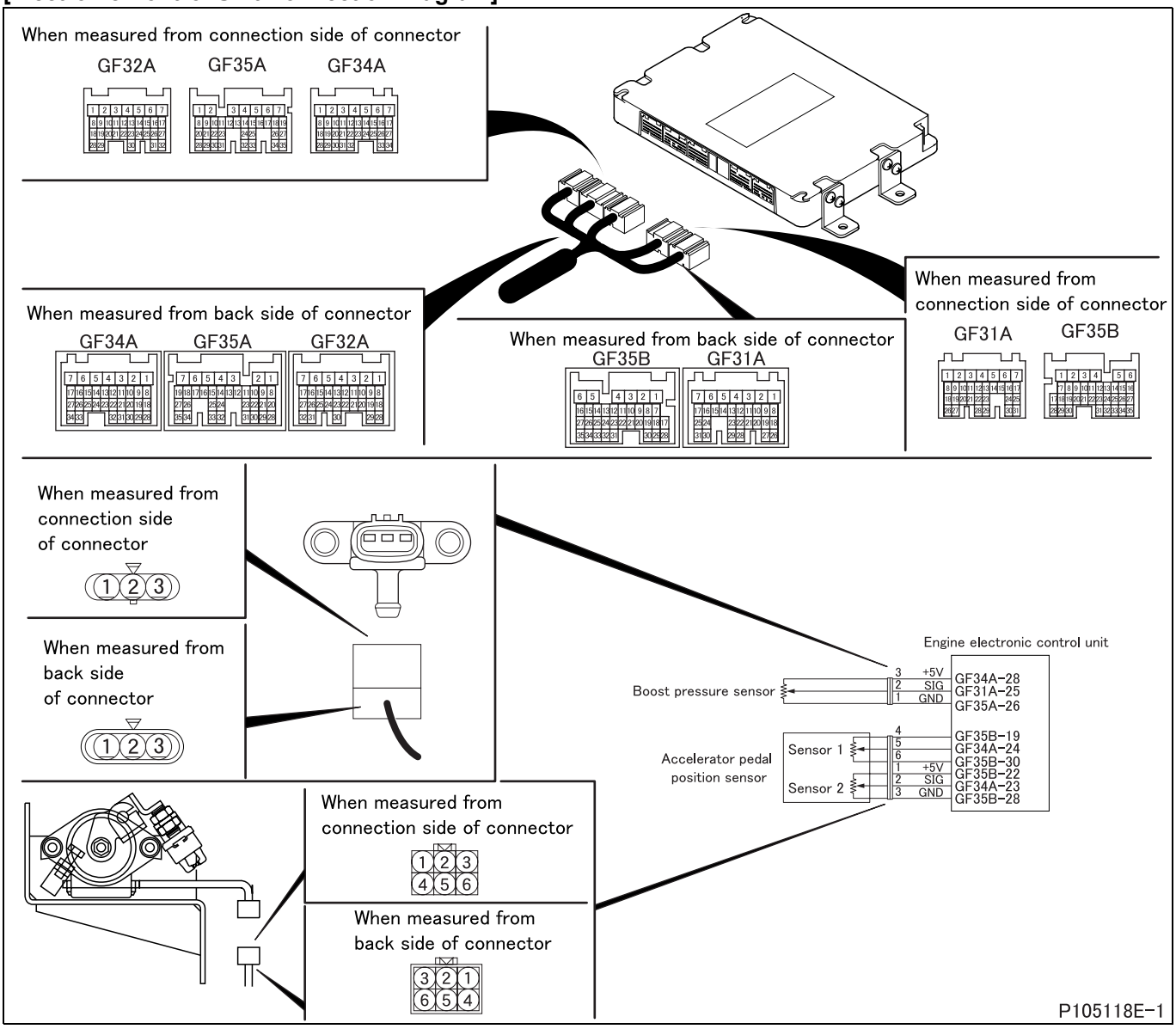

[Parts Identification and Location]

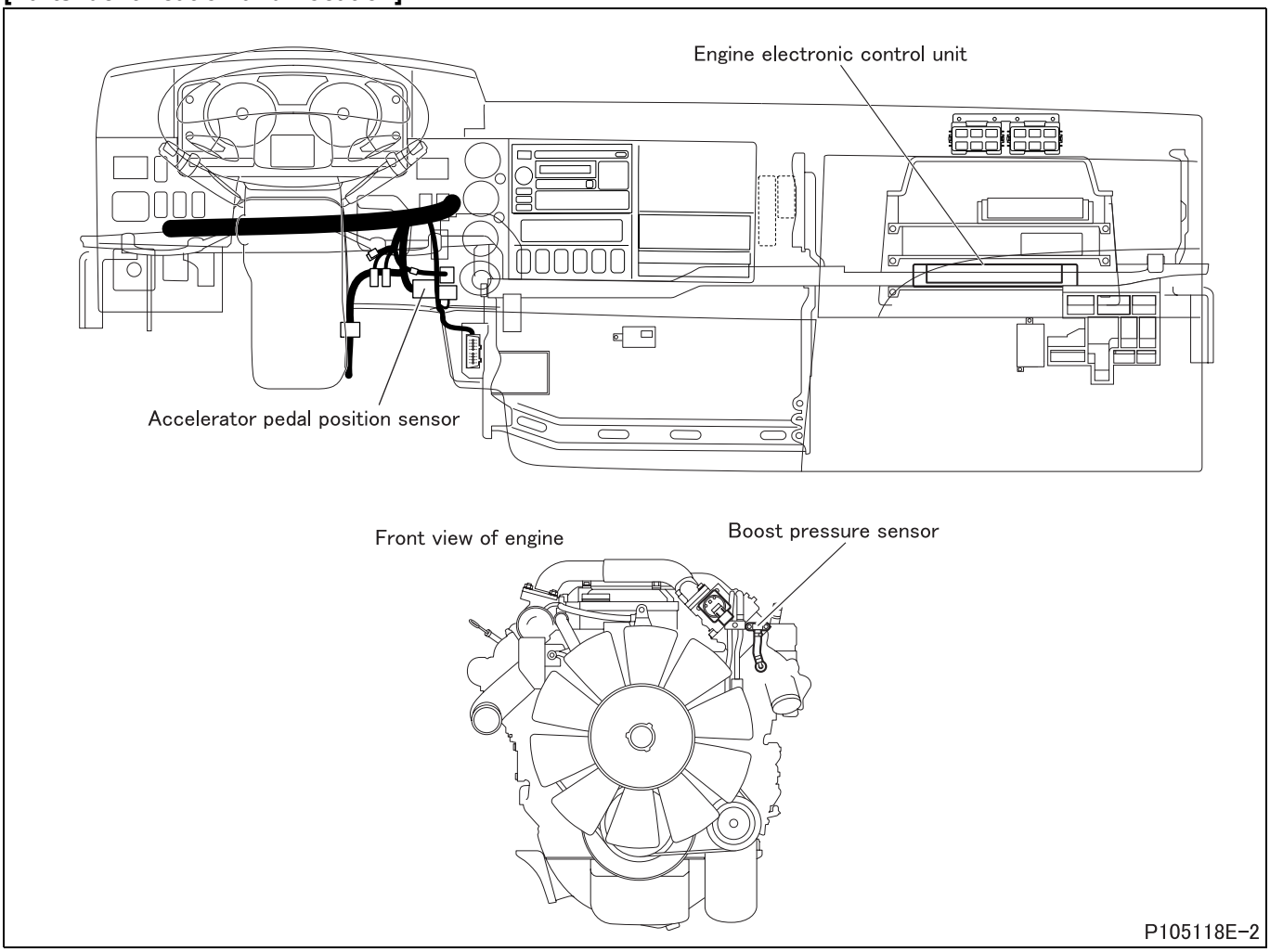

[Fault diagnosis]

- Perform checks in the sequence of the following steps.

Step 1	Inspection items		Inspection of electronic control unit connector
	Maintenance item		Inspection of connector
	Inspection condition		–
	Requirements		• Connector is properly connected. • No trace of water entry is found. • No corrosion is found in terminal. • Connection to terminal is appropriate.
	Inspection result (Is the judging standard satisfied?)	YES	Go to step 2.
		NO	Modify connector.

Step 2	Inspection items		Inspection by electronic control unit connector (power supply): accelerator pedal position sensor (sensor 2)
	Maintenance item		Measure value of voltage between connector (GF35B) terminal No. 22 (+) and No. 28 (–).
	Inspection condition		• Measure from back side of connector of harness with each device connected to harness. • Starter switch: ON
	Requirements		5 V
	Inspection result (Is the judging standard satisfied?)	YES	Go to step 5.
		NO	Go to step 3.

Step 3	Inspection items		Inspection of accelerator pedal position sensor (sensor 2) connector
	Maintenance item		Inspection of connector
	Inspection condition		–
	Requirements		• Connector is properly connected. • No trace of water entry is found. • No corrosion is found in terminal. • Connection to terminal is appropriate.
	Inspection result (Is the judging standard satisfied?)	YES	Go to step 4.
		NO	Modify connector.

Step 4	Inspection items		Inspection of harness between electronic control unit and accelerator pedal position sensor (sensor 2) (power supply)
	Maintenance item		Check circuit between accelerator pedal position sensor (sensor 2) connector terminal No. 1 and electronic control unit connector (GF35B) terminal No. 22.
	Inspection condition		Disconnect each device from harness and measure from connection side of harness connector.
	Requirements		There is continuity.
	Inspection result (Is the judging standard satisfied?)	YES	Go to step 5.
		NO	Modify harness.

Step 5	Inspection items		Inspection by electronic control unit connector: boost pressure sensor
	Maintenance item		Measure value of voltage between connector (GF35A) terminal No. 24 (+) and No. 27 (–).
	Inspection condition		• Measure from back side of connector of harness with each device connected to harness. • Starter switch: ON
	Requirements		5 V
	Inspection result (Is the judging standard satisfied?)	YES	Go to transient fault (See Gr00.).
		NO	Go to step 6.

Step 6	Inspection items		Inspection of boost pressure sensor connector
	Maintenance item		Inspection of connector
	Inspection condition		–
	Requirements		• Connector is properly connected. • No trace of water entry is found. • No corrosion is found in terminal. • Connection to terminal is appropriate.
	Inspection result (Is the judging standard satisfied?)	YES	Go to step 7.
		NO	Modify connector.

Step 7	Inspection items		Inspection of harness between electronic control unit and boost pressure sensor (power supply)
	Maintenance item		Check circuit between boost pressure sensor connector terminal No. 3 and electronic control unit connector (GF35A) terminal No. 24.
	Inspection condition		Disconnect each device from harness and measure from connection side of harness connector.
	Requirements		There is continuity.
	Inspection result (Is the judging standard satisfied?)	YES	Replacement of electronic control unit
		NO	Modify harness.

[Fault code]
Diagnosis code: P0653/Flash code: 81
[Monitor]
Abnormality of sensor supply voltage 2
[Fault (outline)]
High signal range check
[Diagnosis check]
- Sensor supply voltage 2 in engine electronic control unit is monitored.
- Units served by sensor supply 2
  - Accelerator pedal position sensor (sensor 2)
  - Boost pressure sensor

[Code generation condition]
- Supply voltage to units remain over 6 V for 0.03 second.
  (Warning lamp is lit and diagnosis code is displayed on first establishment of code generation condition.)

[Diagnosis check timing]
- When code generation condition is established after starter switch ON

[Diagnostic requirement]
- 2 seconds passed after starter switch ON
- 2 seconds passed after cranking
- Battery voltage: normal

[Control effected by electronic control unit during fault]
- Effects no special control.

[Probable cause of trouble]
- Open-circuit or short-circuit of harness between electronic control unit and each sensor
- Abnormality of each connector
- Abnormality of each sensor
- Abnormality in electronic control unit

[Recoverability]
<Control during fault>
- Recovered if signal becomes normal with starter switch in ON position.

<Warning lamp>
- Extinguished at 4th driving cycle after normal signal is input.

<Fault code>
- Automatically cleared at 40th warm up cycle after warning lamp is extinguished.
  (To clear as desired, erase from the memory.)

Driving cycle : “Starter switch ON to start engine till starter switch OFF” constitutes 1 driving cycle.
Warm up cycle : “Starter switch ON to start engine till starter switch OFF after coolant temperature increased and engine warmed up” constitutes 1 warm up cycle.

[Electronic Control Unit Connection Diagram]

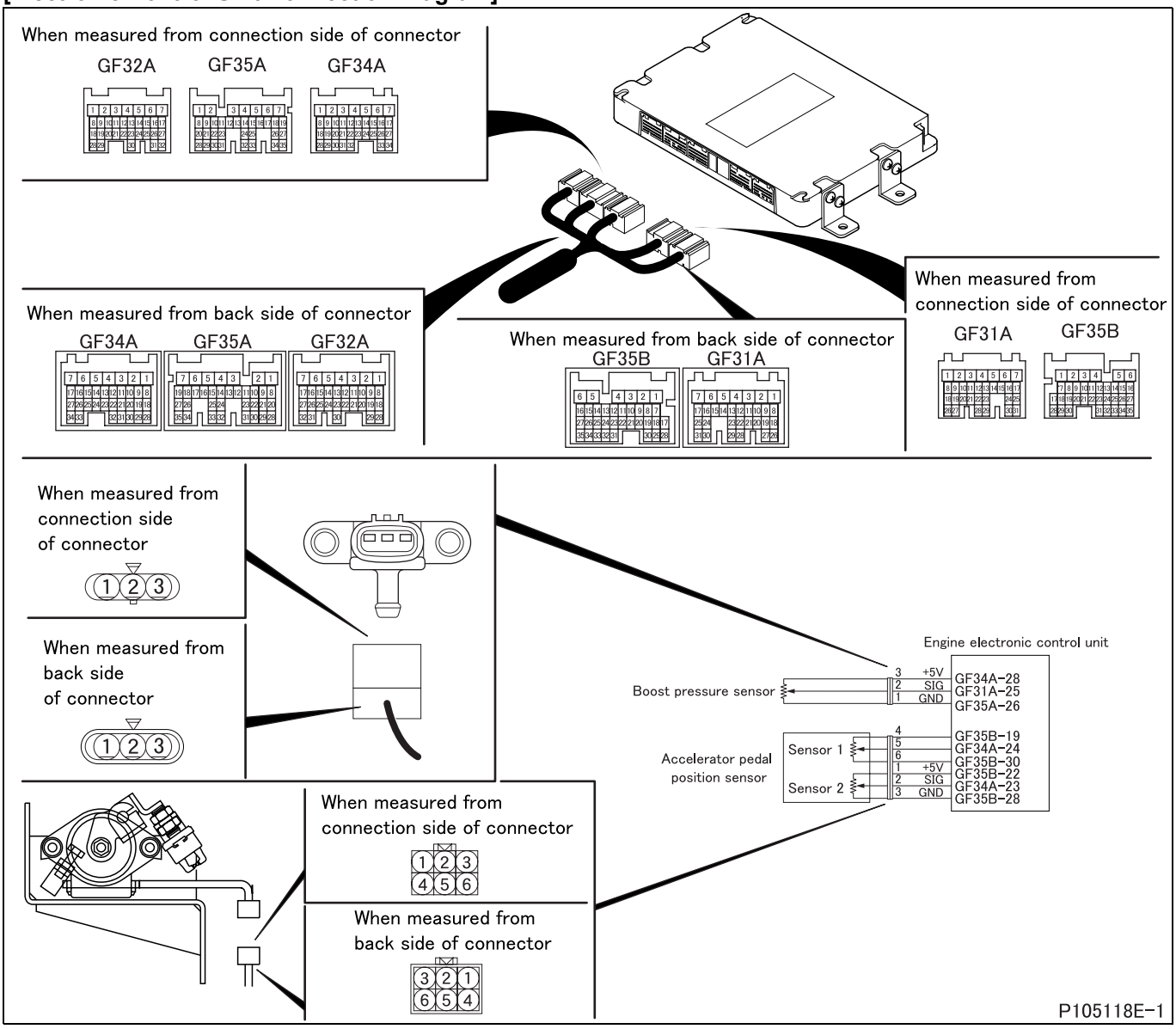

[Parts Identification and Location]

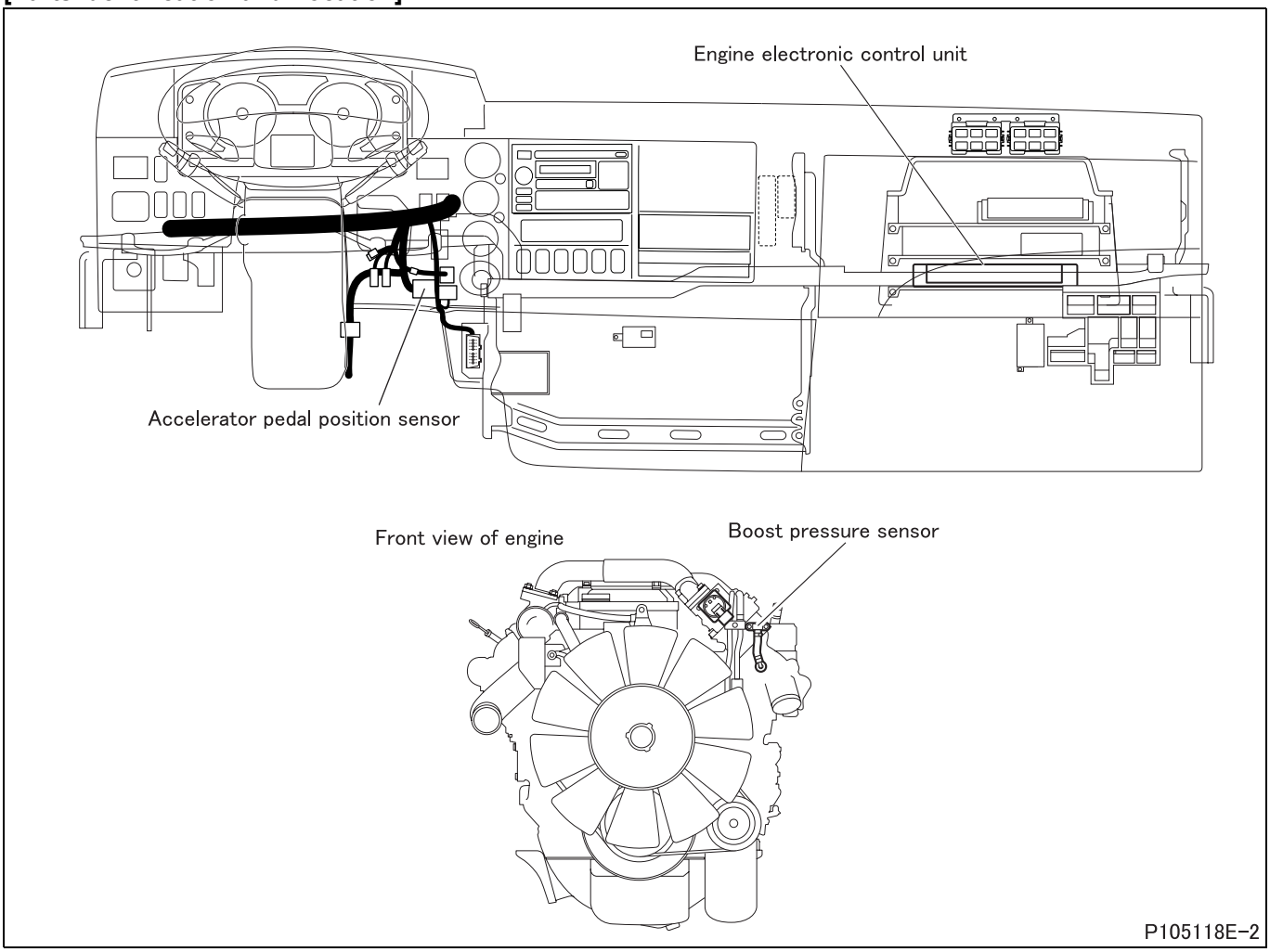

[Fault diagnosis]

- Perform checks in the sequence of the following steps.

Step 1	Inspection items		Inspection of electronic control unit connector
	Maintenance item		Inspection of connector
	Inspection condition		–
	Requirements		• Connector is properly connected. • No trace of water entry is found. • No corrosion is found in terminal. • Connection to terminal is appropriate.
	Inspection result (Is the judging standard satisfied?)	YES	Go to step 2.
		NO	Modify connector.

Step 2	Inspection items		Inspection by electronic control unit connector (power supply): accelerator pedal position sensor (sensor 2)
	Maintenance item		Measure value of voltage between connector (GF35B) terminal No. 22 (+) and No. 28 (–).
	Inspection condition		• Measure from back side of connector of harness with each device connected to harness. • Starter switch: ON
	Requirements		5 V
	Inspection result (Is the judging standard satisfied?)	YES	Go to step 5.
		NO	Go to step 3.

Step 3	Inspection items		Inspection of accelerator pedal position sensor (sensor 2) connector
	Maintenance item		Inspection of connector
	Inspection condition		–
	Requirements		• Connector is properly connected. • No trace of water entry is found. • No corrosion is found in terminal. • Connection to terminal is appropriate.
	Inspection result (Is the judging standard satisfied?)	YES	Go to step 4.
		NO	Modify connector.

Step 4	Inspection items		Inspection of harness between electronic control unit and accelerator pedal position sensor (sensor 2) (power supply)
	Maintenance item		Check circuit between accelerator pedal position sensor (sensor 2) connector terminal No. 1 and electronic control unit connector (GF35B) terminal No. 22.
	Inspection condition		Disconnect each device from harness and measure from connection side of harness connector.
	Requirements		There is continuity.
	Inspection result (Is the judging standard satisfied?)	YES	Go to step 5.
		NO	Modify harness.

Step 5	Inspection items		Inspection by electronic control unit connector: boost pressure sensor
	Maintenance item		Measure value of voltage between connector (GF35A) terminal No. 24 (+) and No. 27 (–).
	Inspection condition		• Measure from back side of connector of harness with each device connected to harness. • Starter switch: ON
	Requirements		5 V
	Inspection result (Is the judging standard satisfied?)	YES	Go to transient fault (See Gr00.).
		NO	Go to step 6.

Step 6	Inspection items		Inspection of boost pressure sensor connector
	Maintenance item		Inspection of connector
	Inspection condition		–
	Requirements		• Connector is properly connected. • No trace of water entry is found. • No corrosion is found in terminal. • Connection to terminal is appropriate.
	Inspection result (Is the judging standard satisfied?)	YES	Go to step 7.
		NO	Modify connector.

Step 7	Inspection items		Inspection of harness between electronic control unit and boost pressure sensor (power supply)
	Maintenance item		Check circuit between boost pressure sensor connector terminal No. 3 and electronic control unit connector (GF35A) terminal No. 24.
	Inspection condition		Disconnect each device from harness and measure from connection side of harness connector.
	Requirements		There is continuity.
	Inspection result (Is the judging standard satisfied?)	YES	Replacement of electronic control unit
		NO	Modify harness.

[Fault code]
Diagnosis code: P0685/Flash code: 84
[Monitor]
Abnormality of electronic drive unit relay
[Fault (outline)]
Electronic drive unit OFF with starter switch ON
[Diagnosis check]
- Electronic drive unit relay is checked for internal switch being stuck open.

[Code generation condition]
- Electronic drive unit relay circuit remains open as detected for 1 second. (No communication through controller area network 2)
  (Warning lamp is lit and diagnosis code is displayed on second establishment of code generation condition.)

[Diagnosis check timing]
- When code generation condition is established after starter switch ON

[Diagnostic requirement]
- 2 seconds passed after starter switch ON
- 2 seconds passed after cranking
- Battery voltage: normal
- Electronic drive unit relay: active
- Exhaust gas recirculation: initialization process completed
- Controller area network 2 communication in order

[Control effected by electronic control unit during fault]
- Effects no special control.

[Probable cause of trouble]
- Open-circuit or short-circuit of harness between electronic control unit and electronic drive unit relay
- Abnormality of each connector
- Abnormality of electronic drive unit relay
- Abnormality in electronic control unit

[Recoverability]
<Control during fault>
- Recovered if signal becomes normal with starter switch in ON position.

<Warning lamp>
- Extinguished at 4th driving cycle after normal signal is input.

<Fault code>
- Automatically cleared at 40th warm up cycle after warning lamp is extinguished.
  (To clear as desired, erase from the memory.)

Driving cycle : “Starter switch ON to start engine till starter switch OFF” constitutes 1 driving cycle.
Warm up cycle : “Starter switch ON to start engine till starter switch OFF after coolant temperature increased and engine warmed up” constitutes 1 warm up cycle.

[Electronic Control Unit Connection Diagram]

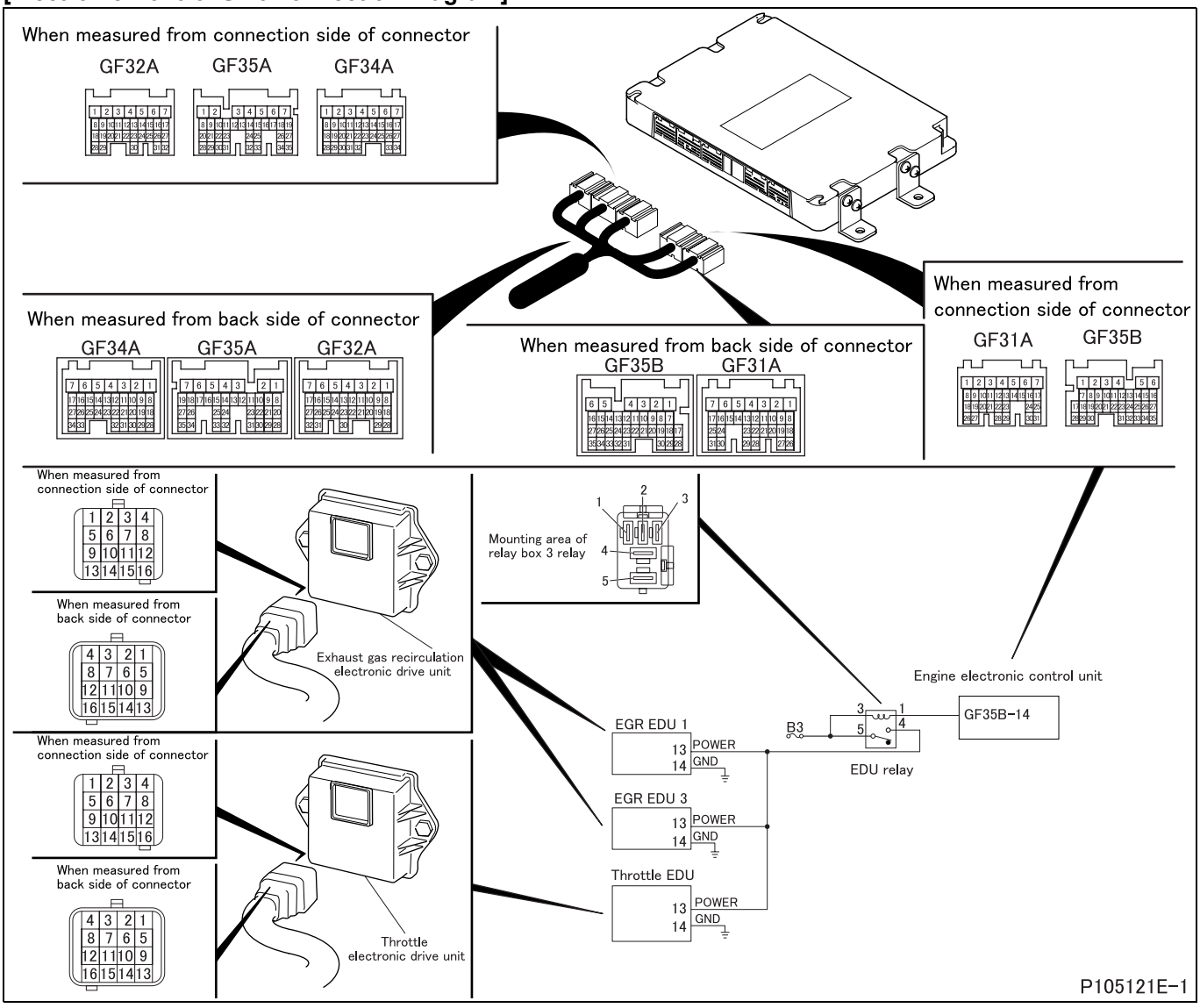

[Parts Identification and Location]

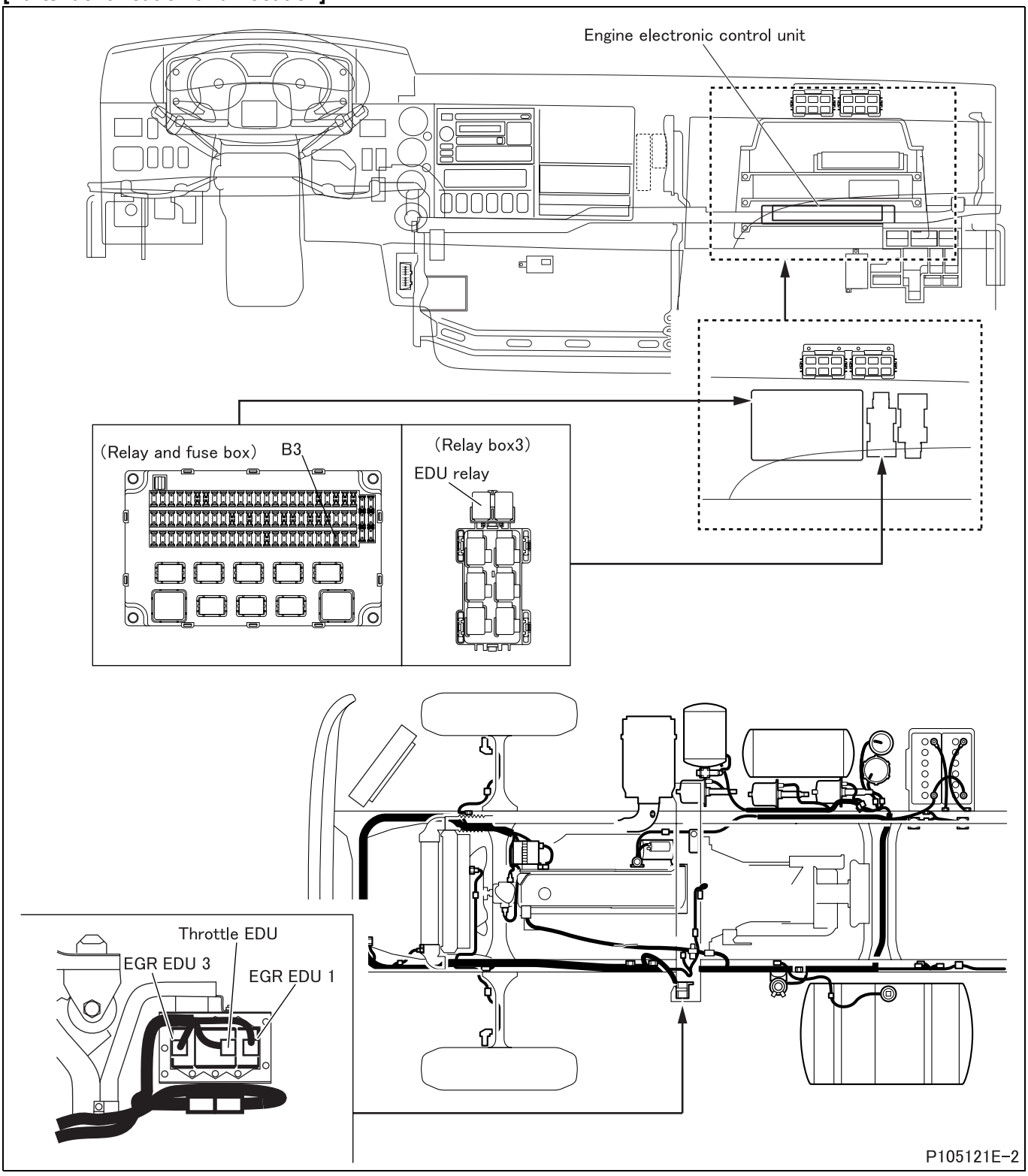

[Fault diagnosis]

- Perform checks in the sequence of the following steps.

Step 1	Inspection items		Inspection by control data
	Maintenance item		Perform actuator test item No. A9 “EDU Relay”.
	Inspection condition		Starter switch: ON
	Requirements		Relay operation sound is noted (automatically reset after 6 seconds), or ON/OFF switching of Service Data: item No. 90 “EDU Relay” is effected.
	Inspection result (Is the judging standard satisfied?)	YES	Go to transient fault (See Gr00.).
		NO	Go to step 2.

Step 2	Inspection items		Inspection of electronic control unit connector
	Maintenance item		Inspection of connector
	Inspection condition		–
	Requirements		• Connector is properly connected. • No trace of water entry is found. • No corrosion is found in terminal. • Connection to terminal is appropriate.
	Inspection result (Is the judging standard satisfied?)	YES	Go to step 3.
		NO	Modify connector.

Step 3	Inspection items		Inspection of relay connector
	Maintenance item		Inspection of connector
	Inspection condition		–
	Requirements		• Connector is properly connected. • No trace of water entry is found. • No corrosion is found in terminal. • Connection to terminal is appropriate.
	Inspection result (Is the judging standard satisfied?)	YES	Go to step 4.
		NO	Modify connector.

Step 4	Inspection items		Inspection of relay unit
	Maintenance item		Measure continuity between terminals No. 2 and 5 when relay operates.
	Inspection condition		Apply battery voltage across connector terminals No. 3 (+) and 1 (–).
	Requirements		There is continuity.
	Inspection result (Is the judging standard satisfied?)	YES	Go to step 5.
		NO	Replacement of relay

<Step 4 inspection diagram>

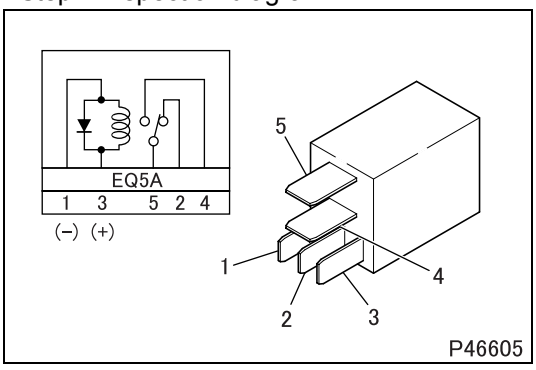

Step 5	Inspection items		Inspection of harness between relay and electronic control unit (ground)
	Maintenance item		Check circuit between relay connector terminal No. 1 and electronic control unit connector (GF35B) terminal No. 14.
	Inspection condition		Disconnect each device from harness and measure from connection side of harness connector.
	Requirements		There is continuity.
	Inspection result (Is the judging standard satisfied?)	YES	Go to step 6.
		NO	Modify harness.

Step 6	Inspection items		Inspection of harness between relay and electronic control unit (power supply)
	Maintenance item		Check circuit between relay connector terminal No. 3 and fuse (B3).
	Inspection condition		Disconnect each device from harness and measure from connection side of harness connector.
	Requirements		There is continuity.
	Inspection result (Is the judging standard satisfied?)	YES	Go to step 7.
		NO	Modify harness.

Step 7	Inspection items		Inspection by control data
	Maintenance item		Perform actuator test item No. A9 “EDU Relay”.
	Inspection condition		Starter switch: ON
	Requirements		Relay operation sound is noted (automatically reset after 6 seconds), or ON/OFF switching of Service Data: item No. 90 “EDU Relay” is effected.
	Inspection result (Is the judging standard satisfied?)	YES	Go to transient fault (See Gr00.).
		NO	Replacement of electronic control unit

[Fault code]
Diagnosis code: P0686/Flash code: 84
[Monitor]
Abnormality of electronic drive unit relay
[Fault (outline)]
Short circuit ground
[Diagnosis check]
- Electronic drive unit relay (internal coil) monitored for short-circuit to ground.

[Code generation condition]
- Engine continues to operate for 1 second even if starter switch is turned to OFF, which may result from that communication (to electronic drive unit) through controller area network 2 is not interrupted because of short-circuit to ground in electronic drive unit relay (internal coil). (In such a case, trouble occurrence is reported to electronic control unit, and diagnosis code is indicated when starter switch is turned ON next time.)
  (Warning lamp is lit on second establishment of code generation condition.)

[Diagnosis check timing]
- When code generation condition is established after starter switch ON

[Diagnostic requirement]
- 2 seconds passed after starter switch ON
- 2 seconds passed after cranking
- Battery voltage: normal
- Starter switch: OFF
- Engine status: after-run
- Electronic drive unit relay request signal: OFF
- Termination processing of each electronic drive unit: normal

[Control effected by electronic control unit during fault]
- Effects no special control.

[Probable cause of trouble]
- Open-circuit or short-circuit of harness between electronic control unit and electronic drive unit relay
- Abnormality of each connector
- Abnormality of electronic drive unit relay
- Abnormality in electronic control unit

[Recoverability]
<Control during fault>
- Recovered if signal becomes normal with starter switch in ON position.

<Warning lamp>
- Extinguished at 4th driving cycle after normal signal is input.

<Fault code>
- Automatically cleared at 40th warm up cycle after warning lamp is extinguished.
  (To clear as desired, erase from the memory.)

Driving cycle : “Starter switch ON to start engine till starter switch OFF” constitutes 1 driving cycle.
Warm up cycle : “Starter switch ON to start engine till starter switch OFF after coolant temperature increased and engine warmed up” constitutes 1 warm up cycle.

[Electronic Control Unit Connection Diagram]

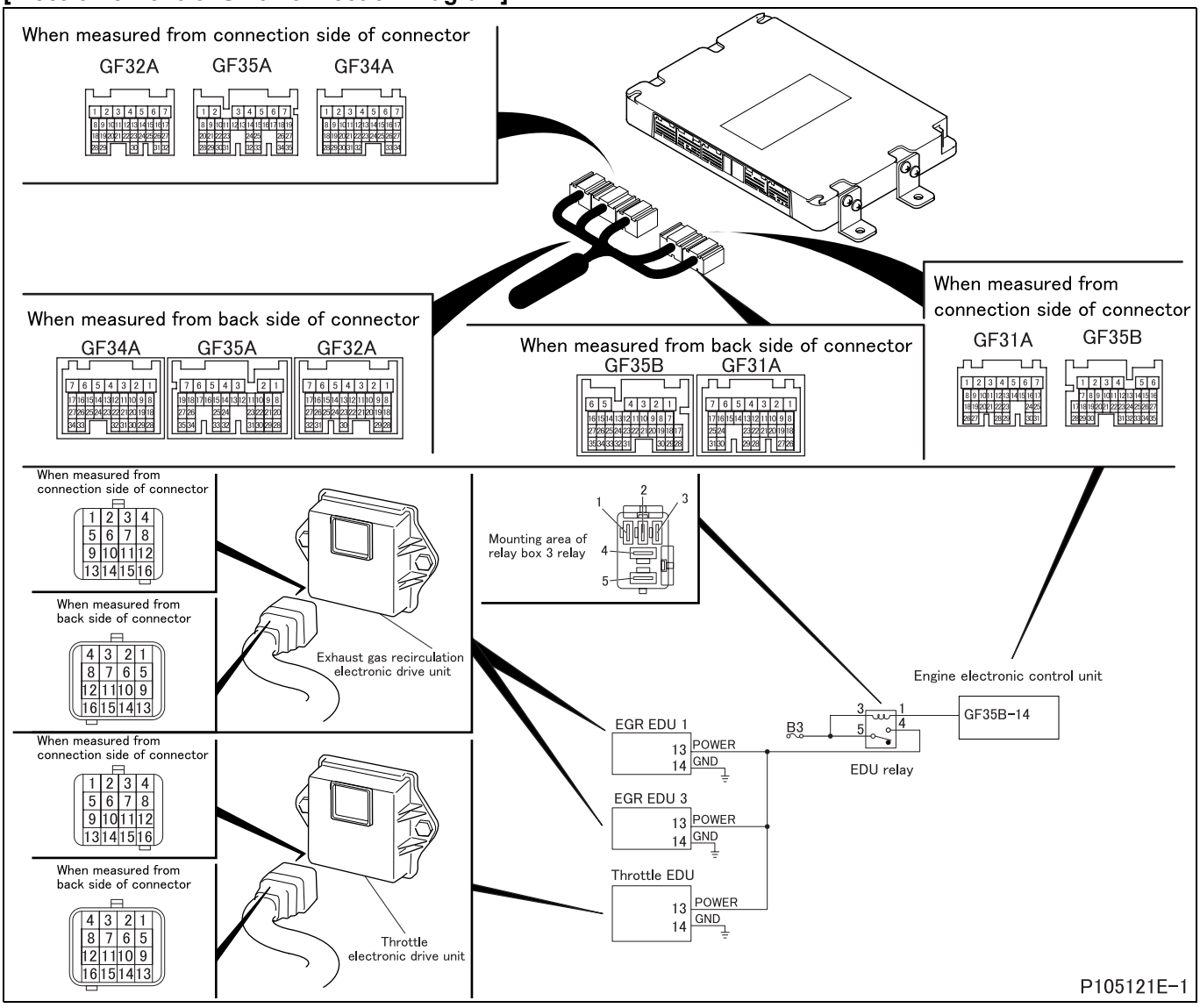

[Parts Identification and Location]

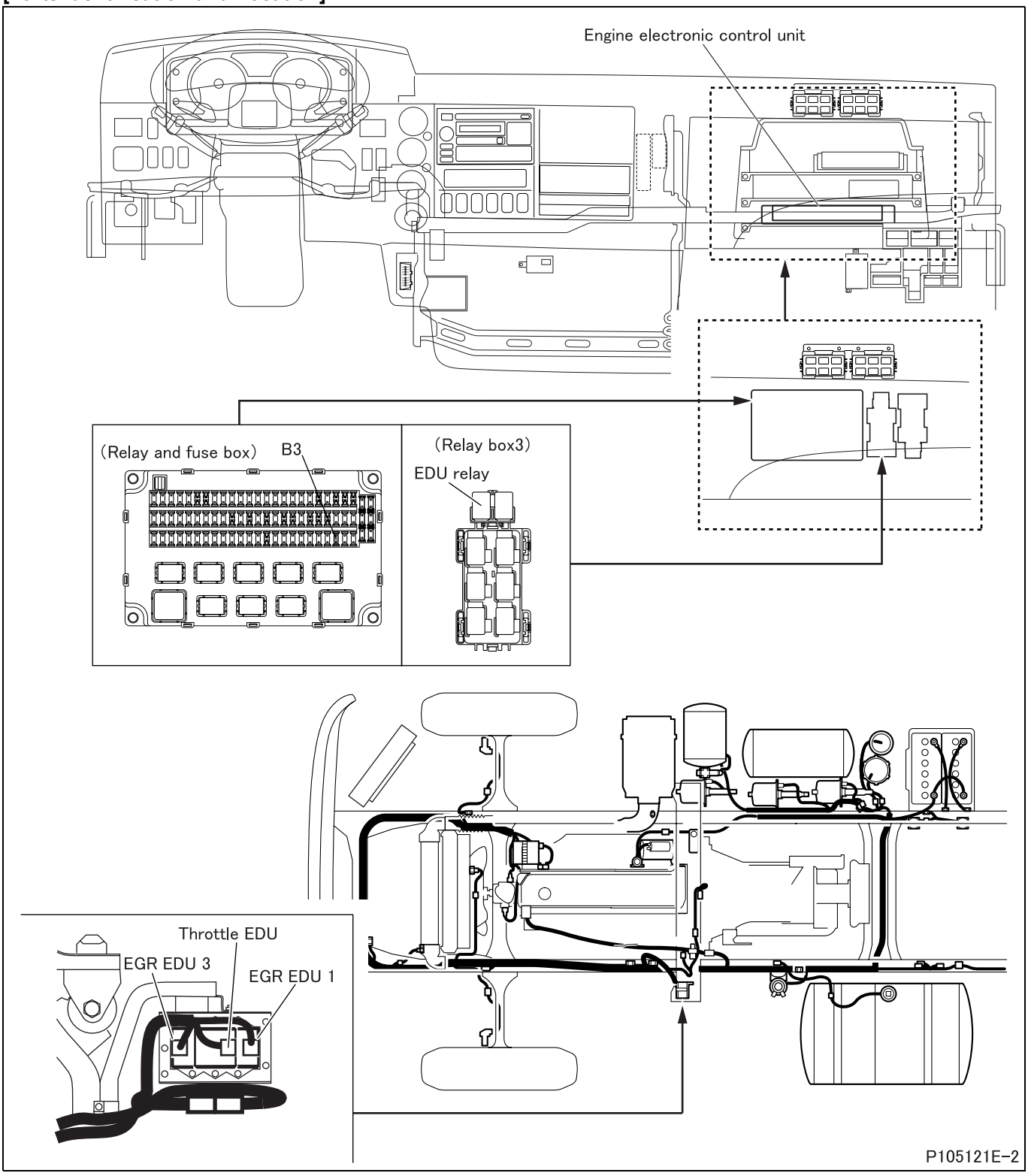

[Fault diagnosis]

- Perform checks in the sequence of the following steps.

Step 1	Inspection items		Inspection by control data
	Maintenance item		Perform actuator test item No. A9 “EDU Relay”.
	Inspection condition		Starter switch: ON
	Requirements		Relay operation sound is noted (automatically reset after 6 seconds), or ON/OFF switching of Service Data: item No. 90 “EDU Relay” is effected.
	Inspection result (Is the judging standard satisfied?)	YES	Go to transient fault (See Gr00.).
		NO	Go to step 2.

Step 2	Inspection items		Inspection of electronic control unit connector
	Maintenance item		Inspection of connector
	Inspection condition		–
	Requirements		• Connector is properly connected. • No trace of water entry is found. • No corrosion is found in terminal. • Connection to terminal is appropriate.
	Inspection result (Is the judging standard satisfied?)	YES	Go to step 3.
		NO	Modify connector.

Step 3	Inspection items		Inspection of relay connector
	Maintenance item		Inspection of connector
	Inspection condition		–
	Requirements		• Connector is properly connected. • No trace of water entry is found. • No corrosion is found in terminal. • Connection to terminal is appropriate.
	Inspection result (Is the judging standard satisfied?)	YES	Go to step 4.
		NO	Modify connector.

Step 4	Inspection items		Inspection of relay unit
	Maintenance item		Measure continuity between terminals No. 2 and 5 when relay operates.
	Inspection condition		Apply battery voltage across connector terminals No. 3 (+) and 1 (–).
	Requirements		There is continuity.
	Inspection result (Is the judging standard satisfied?)	YES	Go to step 5.
		NO	Replacement of relay

<Step 4 inspection diagram>

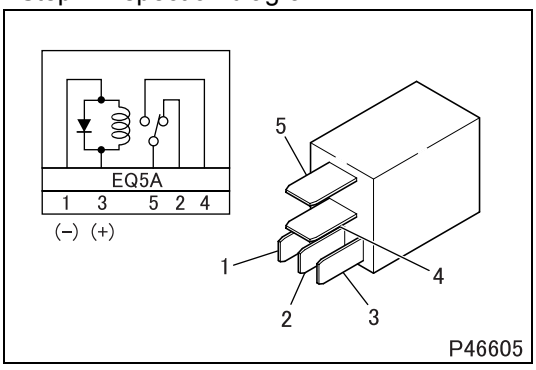

Step 5	Inspection items		Inspection of harness between relay and electronic control unit (ground)
	Maintenance item		Check circuit between relay connector terminal No. 1 and electronic control unit connector (GF35B) terminal No. 14.
	Inspection condition		Disconnect each device from harness and measure from connection side of harness connector.
	Requirements		There is continuity.
	Inspection result (Is the judging standard satisfied?)	YES	Go to step 6.
		NO	Modify harness.

Step 6	Inspection items		Inspection of harness between relay and electronic control unit (power supply)
	Maintenance item		Check circuit between relay connector terminal No. 3 and fuse (B3).
	Inspection condition		Disconnect each device from harness and measure from connection side of harness connector.
	Requirements		There is continuity.
	Inspection result (Is the judging standard satisfied?)	YES	Go to step 7.
		NO	Modify harness.

Step 7	Inspection items		Inspection by control data
	Maintenance item		Perform actuator test item No. A9 “EDU Relay”.
	Inspection condition		Starter switch: ON
	Requirements		Relay operation sound is noted (automatically reset after 6 seconds), or ON/OFF switching of Service Data: item No. 90 “EDU Relay” is effected.
	Inspection result (Is the judging standard satisfied?)	YES	Go to transient fault (See Gr00.).
		NO	Replacement of electronic control unit

[Fault code]
Diagnosis code: P0687/Flash code: 84
[Monitor]
Abnormality of electronic drive unit relay
[Fault (outline)]
Short circuit battery
[Diagnosis check]
- Electronic drive unit relay (internal coil) monitored for short-circuit to battery.

[Code generation condition]
- Electronic drive unit relay circuit remains shorted to battery as detected for approx. 1 second. (No communication through controller area network 2)
  (Warning lamp is lit and diagnosis code is displayed on second establishment of code generation condition.)

[Diagnosis check timing]
- When code generation condition is established after starter switch ON

[Diagnostic requirement]
- 2 seconds passed after starter switch ON
- 2 seconds passed after cranking
- Battery voltage: normal
- Electronic drive unit relay: active

[Control effected by electronic control unit during fault]
- Effects no special control.

[Probable cause of trouble]
- Open-circuit or short-circuit of harness between electronic control unit and electronic drive unit relay
- Abnormality of each connector
- Abnormality of electronic drive unit relay
- Abnormality in electronic control unit

[Recoverability]
<Control during fault>
- Recovered if signal becomes normal with starter switch in ON position.

<Warning lamp>
- Extinguished at 4th driving cycle after normal signal is input.

<Fault code>
- Automatically cleared at 40th warm up cycle after warning lamp is extinguished.
  (To clear as desired, erase from the memory.)

Driving cycle : “Starter switch ON to start engine till starter switch OFF” constitutes 1 driving cycle.
Warm up cycle : “Starter switch ON to start engine till starter switch OFF after coolant temperature increased and engine warmed up” constitutes 1 warm up cycle.

[Electronic Control Unit Connection Diagram]

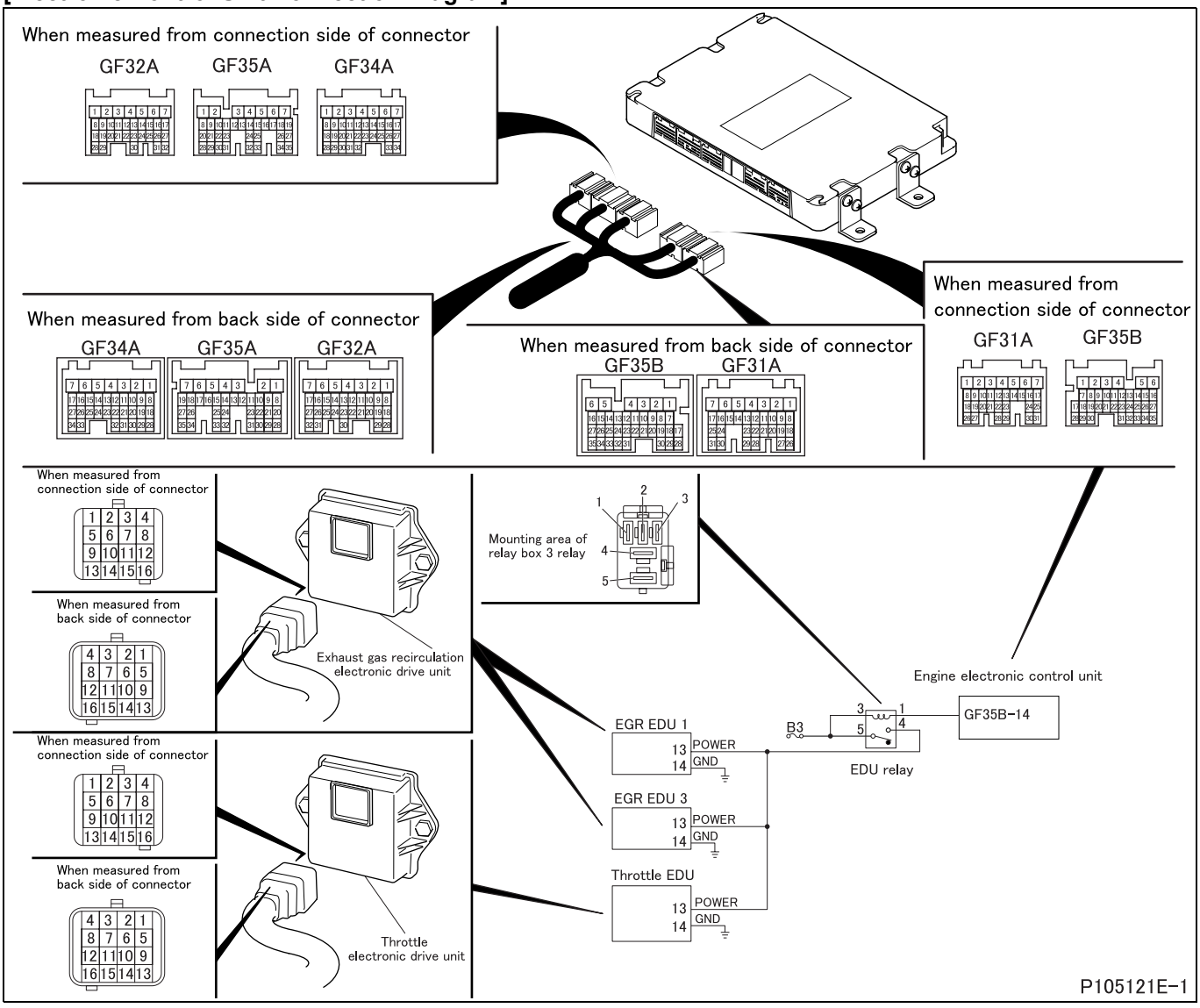

[Parts Identification and Location]

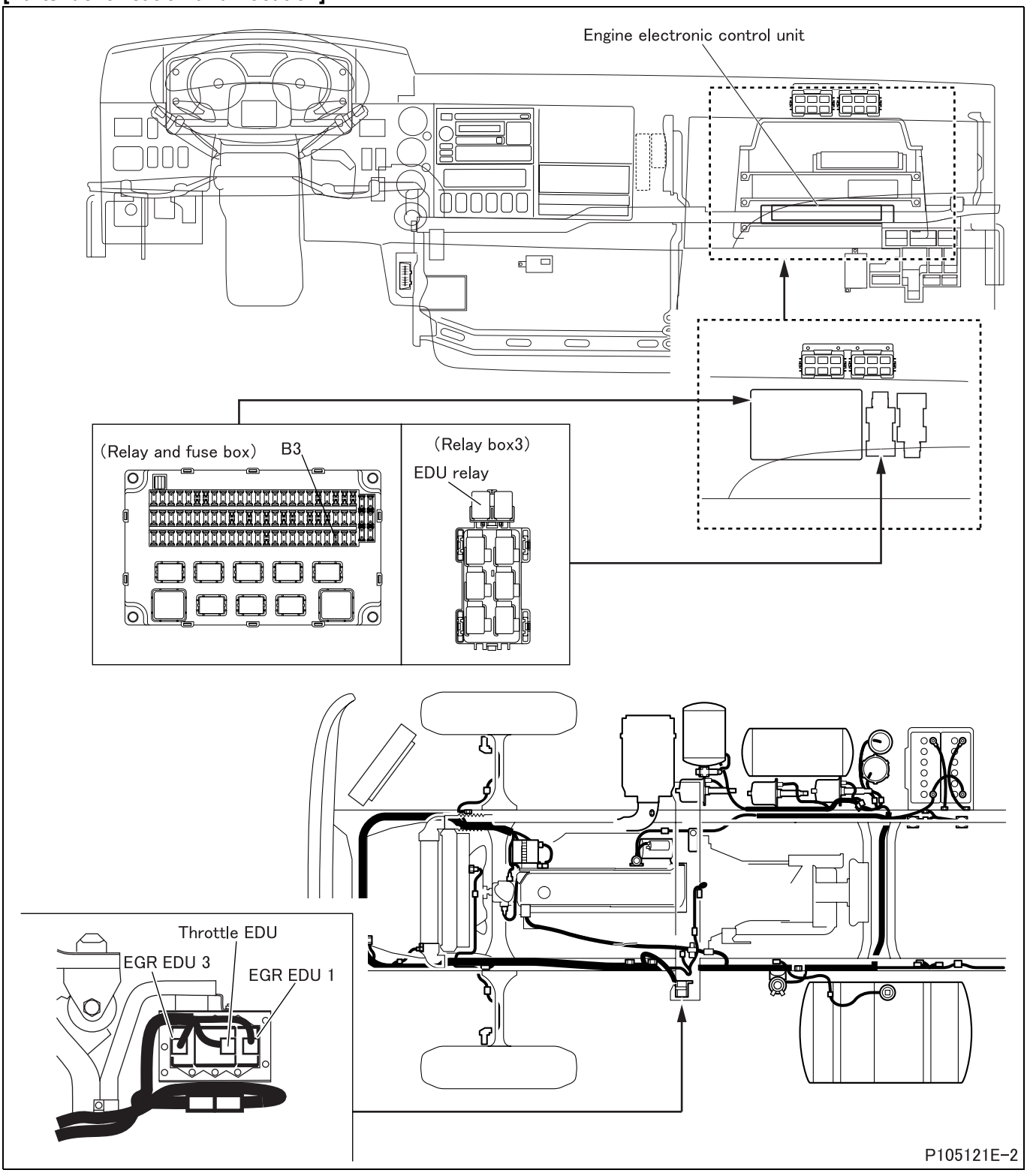

[Fault diagnosis]

- Perform checks in the sequence of the following steps.

Step 1	Inspection items		Inspection by control data
	Maintenance item		Perform actuator test item No. A9 “EDU Relay”.
	Inspection condition		Starter switch: ON
	Requirements		Relay operation sound is noted (automatically reset after 6 seconds), or ON/OFF switching of Service Data: item No. 90 “EDU Relay” is effected.
	Inspection result (Is the judging standard satisfied?)	YES	Go to transient fault (See Gr00.).
		NO	Go to step 2.

Step 2	Inspection items		Inspection of electronic control unit connector
	Maintenance item		Inspection of connector
	Inspection condition		–
	Requirements		• Connector is properly connected. • No trace of water entry is found. • No corrosion is found in terminal. • Connection to terminal is appropriate.
	Inspection result (Is the judging standard satisfied?)	YES	Go to step 3.
		NO	Modify connector.

Step 3	Inspection items		Inspection of relay connector
	Maintenance item		Inspection of connector
	Inspection condition		–
	Requirements		• Connector is properly connected. • No trace of water entry is found. • No corrosion is found in terminal. • Connection to terminal is appropriate.
	Inspection result (Is the judging standard satisfied?)	YES	Go to step 4.
		NO	Modify connector.

Step 4	Inspection items		Inspection of relay unit
	Maintenance item		Measure continuity between terminals No. 2 and 5 when relay operates.
	Inspection condition		Apply battery voltage across connector terminals No. 3 (+) and 1 (–).
	Requirements		There is continuity.
	Inspection result (Is the judging standard satisfied?)	YES	Go to step 5.
		NO	Replacement of relay

<Step 4 inspection diagram>

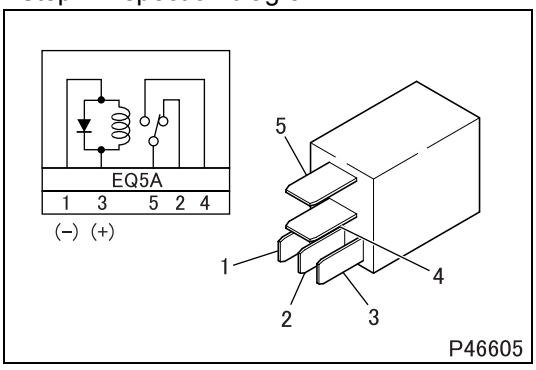

Step 5	Inspection items		Inspection of harness between relay and electronic control unit (ground)
	Maintenance item		Check circuit between relay connector terminal No. 1 and electronic control unit connector (GF35B) terminal No. 14.
	Inspection condition		Disconnect each device from harness and measure from connection side of harness connector.
	Requirements		There is continuity.
	Inspection result (Is the judging standard satisfied?)	YES	Go to step 6.
		NO	Modify harness.

Step 6	Inspection items		Inspection of harness between relay and electronic control unit (power supply)
	Maintenance item		Check circuit between relay connector terminal No. 3 and fuse (B3).
	Inspection condition		Disconnect each device from harness and measure from connection side of harness connector.
	Requirements		There is continuity.
	Inspection result (Is the judging standard satisfied?)	YES	Go to step 7.
		NO	Modify harness.

Step 7	Inspection items		Inspection by control data
	Maintenance item		Perform actuator test item No. A9 “EDU Relay”.
	Inspection condition		Starter switch: ON
	Requirements		Relay operation sound is noted (automatically reset after 6 seconds), or ON/OFF switching of Service Data: item No. 90 “EDU Relay” is effected.
	Inspection result (Is the judging standard satisfied?)	YES	Go to transient fault (See Gr00.).
		NO	Replacement of electronic control unit

[Fault code]
Diagnosis code: P0688/Flash code: 84
[Monitor]
Abnormality of electronic drive unit relay
[Fault (outline)]
Electronic drive unit ON with starter switch OFF
[Diagnosis check]
- Electronic drive unit relay is checked for internal switch being stuck close.

[Code generation condition]
- Engine continues to operate for 1 second even if starter switch is turned to OFF because of communication (to electronic drive unit) through controller area network 2 being not interrupted. (In such a case, trouble occurrence is reported to electronic control unit, and diagnosis code is indicated when starter switch is turned ON next time.) (Warning lamp is lit on second establishment of code generation condition.)

[Diagnosis check timing]
- When code generation condition is established after starter switch ON

[Diagnostic requirement]
- 2 seconds passed after starter switch ON
- 2 seconds passed after cranking
- Battery voltage: normal
- Controller area network 2 communication: available
- Starter switch: to be turned OFF
- Exhaust gas recirculation: initialization process completed

[Control effected by electronic control unit during fault]
- Effects no special control.

[Probable cause of trouble]
- Open-circuit or short-circuit of harness between electronic control unit and electronic drive unit relay
- Abnormality of each connector
- Abnormality of electronic drive unit relay
- Abnormality in electronic control unit

[Recoverability]
<Control during fault>
- Recovered if signal becomes normal with starter switch in ON position.

<Fault code>
- To erase, execute Memory Clear.

[Electronic Control Unit Connection Diagram]

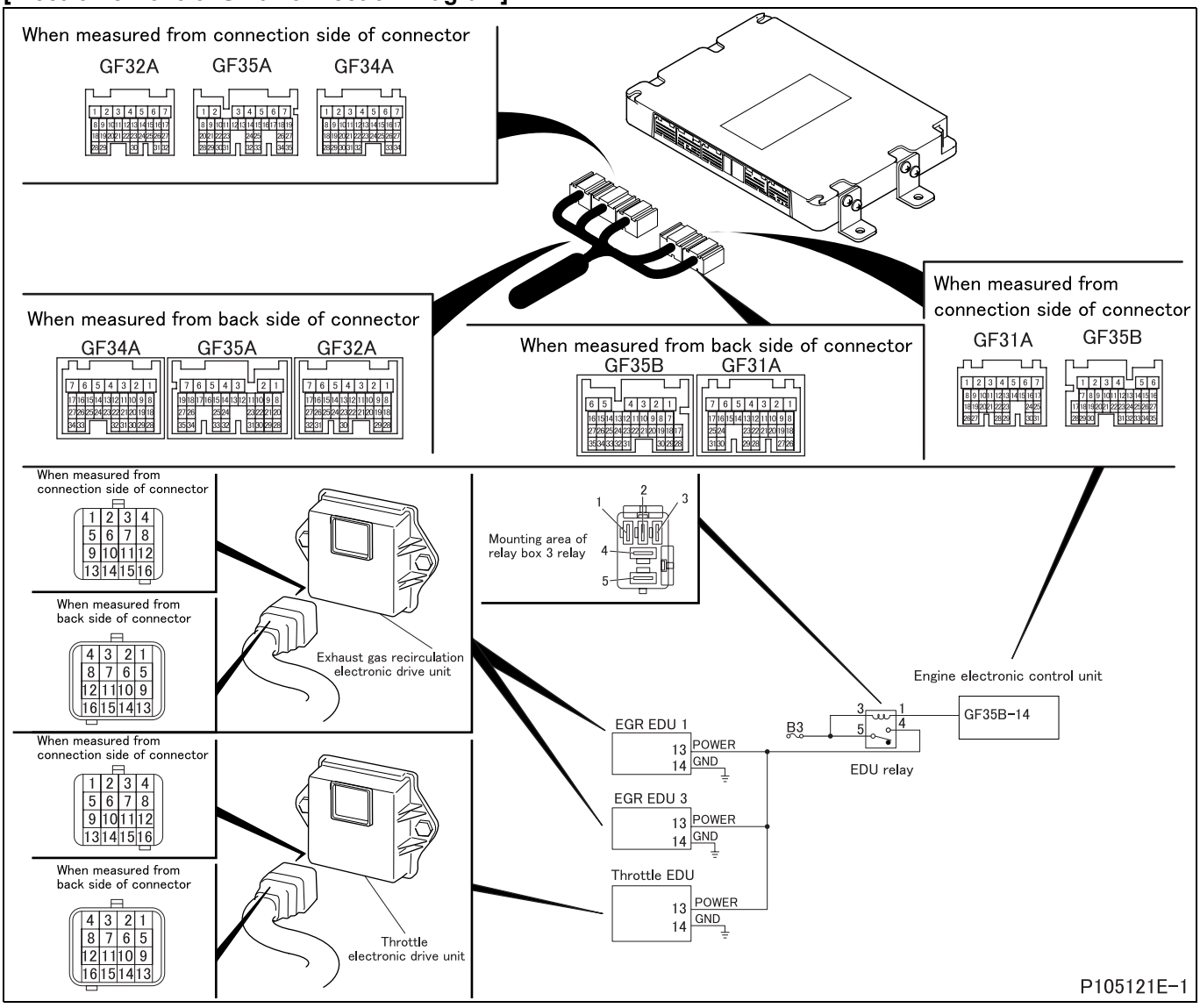

[Parts Identification and Location]

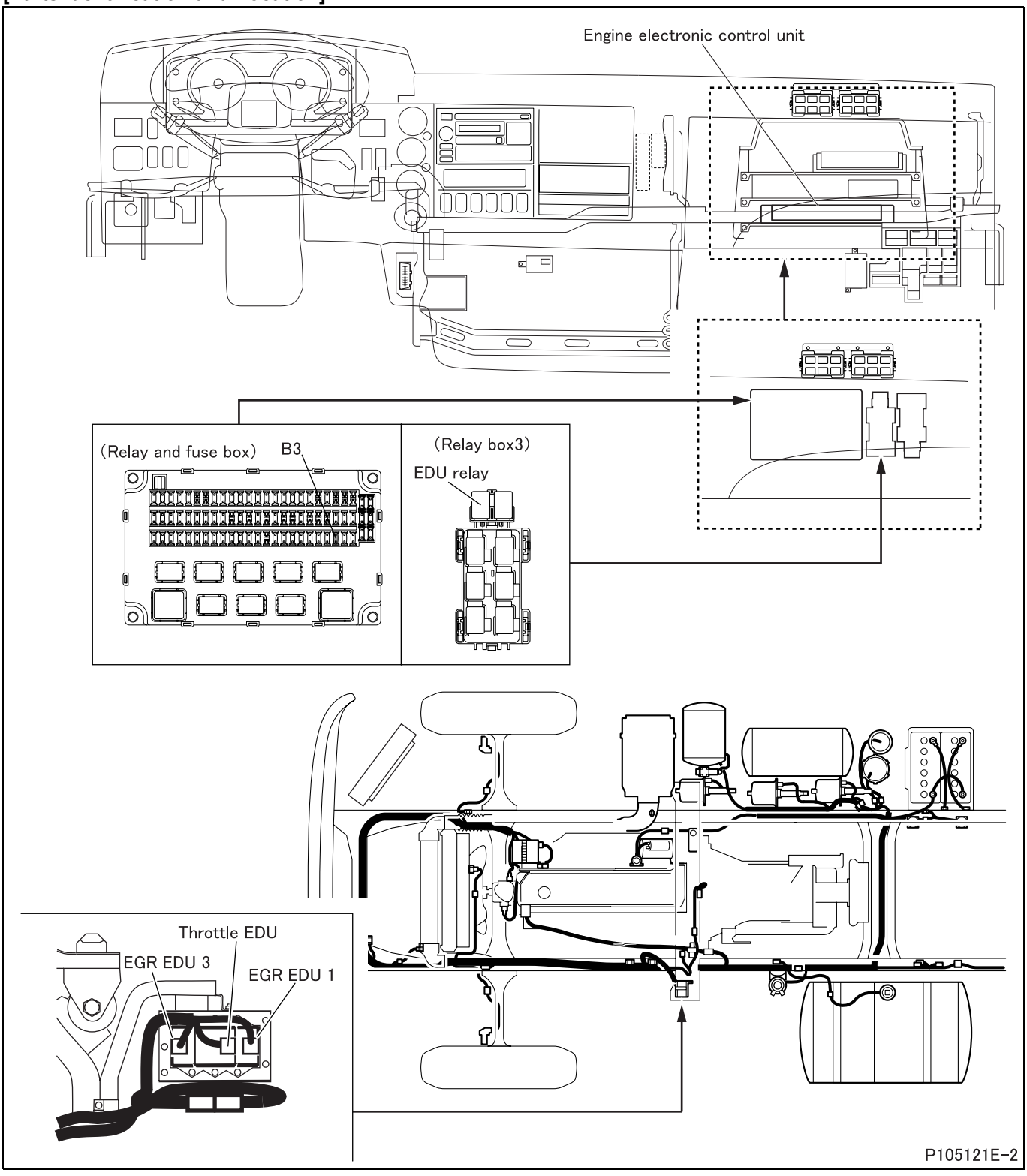

[Fault diagnosis]

- Perform checks in the sequence of the following steps.

Step 1	Inspection items		Inspection by control data
	Maintenance item		Perform actuator test item No. A9 “EDU Relay”.
	Inspection condition		Starter switch: ON
	Requirements		Relay operation sound is noted (automatically reset after 6 seconds), or ON/OFF switching of Service Data: item No. 90 “EDU Relay” is effected.
	Inspection result (Is the judging standard satisfied?)	YES	Go to transient fault (See Gr00.).
		NO	Go to step 2.

Step 2	Inspection items		Inspection of electronic control unit connector
	Maintenance item		Inspection of connector
	Inspection condition		–
	Requirements		• Connector is properly connected. • No trace of water entry is found. • No corrosion is found in terminal. • Connection to terminal is appropriate.
	Inspection result (Is the judging standard satisfied?)	YES	Go to step 3.
		NO	Modify connector.

Step 3	Inspection items		Inspection of relay connector
	Maintenance item		Inspection of connector
	Inspection condition		–
	Requirements		• Connector is properly connected. • No trace of water entry is found. • No corrosion is found in terminal. • Connection to terminal is appropriate.
	Inspection result (Is the judging standard satisfied?)	YES	Go to step 4.
		NO	Modify connector.

Step 4	Inspection items		Inspection of relay unit
	Maintenance item		Measure continuity between terminals No. 2 and 5 when relay operates.
	Inspection condition		Apply battery voltage across connector terminals No. 3 (+) and 1 (–).
	Requirements		There is continuity.
	Inspection result (Is the judging standard satisfied?)	YES	Go to step 5.
		NO	Replacement of relay

<Step 4 inspection diagram>

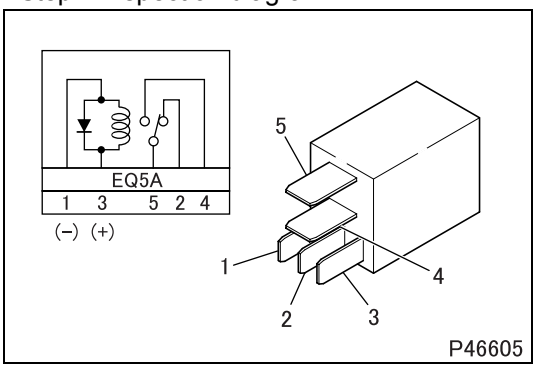

Step 5	Inspection items		Inspection of harness between relay and electronic control unit (ground)
	Maintenance item		Check circuit between relay connector terminal No. 1 and electronic control unit connector (GF35B) terminal No. 14.
	Inspection condition		Disconnect each device from harness and measure from connection side of harness connector.
	Requirements		There is continuity.
	Inspection result (Is the judging standard satisfied?)	YES	Go to step 6.
		NO	Modify harness.

Step 6	Inspection items		Inspection of harness between relay and electronic control unit (power supply)
	Maintenance item		Check circuit between relay connector terminal No. 3 and fuse (B3).
	Inspection condition		Disconnect each device from harness and measure from connection side of harness connector.
	Requirements		There is continuity.
	Inspection result (Is the judging standard satisfied?)	YES	Go to step 7.
		NO	Modify harness.

Step 7	Inspection items		Inspection by control data
	Maintenance item		Perform actuator test item No. A9 “EDU Relay”.
	Inspection condition		Starter switch: ON
	Requirements		Relay operation sound is noted (automatically reset after 6 seconds), or ON/OFF switching of Service Data: item No. 90 “EDU Relay” is effected.
	Inspection result (Is the judging standard satisfied?)	YES	Go to transient fault (See Gr00.).
		NO	Replacement of electronic control unit

[Fault code]
Diagnosis code: P1170/Flash code: 99
[Monitor]
Abnormality of injection quantity adjustment data
[Fault (outline)]
Data abnormality in electronic control unit
[Diagnosis check]
- Checking is made to confirm that data for injection amount compensation is written in engine electronic control unit and they are correct.

[Code generation condition]
- Injection quantity adjustment data remains abnormal or unavailable for approx. 1 second.
  (Warning lamp is lit and diagnosis code is displayed on first establishment of code generation condition.)

[Diagnosis check timing]
- When code generation condition is established after starter switch ON

[Diagnostic requirement]
- 2 seconds passed after starter switch ON
- 2 seconds passed after cranking
- Battery voltage: normal

[Control effected by electronic control unit during fault]
- Control is carried out using injection quantity adjustment resistor No. 1. (Output is slightly reduced.)

[Probable cause of trouble]
- No injection quantity adjustment data stored in engine electronic control unit
  (For data alteration/registration and data write operation, contact your nearest Mitsubishi FUSO Dealer or Mitsubishi FUSO Truck of America, Inc.)

[Recoverability]
<Control during fault>
- Recovered if signal becomes normal with starter switch in ON position.

<Warning lamp>
- Extinguished after input of normal signal.

<Fault code>
- If code recovered to normal, automatically cleared at 40th warm up cycle after warning lamp is lit.
  (To clear as desired, erase from the memory.)

Warm up cycle : “Starter switch ON to start engine till starter switch OFF after coolant temperature increased and engine warmed up” constitutes 1 warm up cycle.

[Fault code]
Diagnosis code: P1240/Flash code: 71
[Monitor]
Abnormality of flow damper (No. 1 cylinder)
[Fault (outline)]
Faulty flow damper check
[Diagnosis check]
- Operation of flow damper is monitored.

[Code generation condition]
- Fuel control cylinder balance (FCCB) and engine speed variation time remain more than specified for approx. 1 minute.
  (Warning lamp is lit and diagnosis code is displayed on first establishment of code generation condition.)

[Diagnosis check timing]
- When code generation condition is established after starter switch ON

[Diagnostic requirement]
- Engine in operation
- 2 seconds passed after starter switch ON
- 2 seconds passed after cranking
- Battery voltage: normal
- Engine speed sensor: normal in signal
- Post injection: none

[Control effected by electronic control unit during fault]
- Learning of FCCB (fuel control cylinder balance) is inhibited.

[Probable cause of trouble]
- Leakage and air are found in fuel system.
- Abnormality of flow damper (No. 1 cylinder)
- Abnormality of electronic control unit
- Abnormality of injector (No. 1 cylinder)

[Recoverability]
<Control during fault>
- Recovered if signal becomes normal with starter switch in ON position.

<Fault code>
- To erase, execute Memory Clear.

[Fault diagnosis]

- Perform checks in the sequence of the following steps.

Step 1	Inspection items		Inspection by control data
	Maintenance item		Perform actuator test item No. BB “Injector Test 1”.
	Inspection condition		• Engine start: At idle • Transmission: neutral • Vehicle speed: 0 km/h {0 MPH} • Other diagnosis codes do not occur.
	Requirements		Engine variation and status remain uncharged even if injector (No. 1 cylinder) is put in injection stopped state.
	Inspection result (Is the judging standard satisfied?)	YES	Go to step 2.
		NO	Go to step 3.

Step 2	Inspection items		Checking of air bleeding
	Maintenance item		Bleed air from fuel filter.
	Inspection condition		Starter switch: OFF
	Requirements		Air bleeding is effected to check if problem is solved (Item No. 61 “Flow Damper (#1)” is checked and if frequency of operation is not increased, problem is judged solved).
	Inspection result (Is the judging standard satisfied?)	YES	Transient fault due to trapped air
		NO	Replacement of injector

Step 3	Inspection items		Inspection by control data
	Maintenance item		Measurement of following service data • Item No. 5B “Pump Adjustment Value (Last Time)” • Item No. 5C “Pump Adjustment Value (This Time)”
	Inspection condition		Engine start: At idle
	Requirements		–200 to +200 mA
	Inspection result (Is the judging standard satisfied?)	YES	Replacement of injector
		NO	Go to step 4.

Step 4	Inspection items		Inspection by control data
	Maintenance item		Perform actuator test item No. C2 “Pump Adjustment Value Clear” to initialize pump learning value.
	Inspection condition		–
	Requirements		Problem is solved with learning value initialized (Item No. 61 “Flow Damper (#1)” is checked and if frequency of operation is not increased, problem is judged solved).
	Inspection result (Is the judging standard satisfied?)	YES	Transient fault due to improper pump learning value
		NO	Replacement of injector (rail is replaced if problem remains unsolved after injector replacement)

[Fault code]
Diagnosis code: P1241/Flash code: 72
[Monitor]
Abnormality of flow damper (No. 2 cylinder)
[Fault (outline)]
Faulty flow damper operation
[Diagnosis check]
- Operation of flow damper is monitored.

[Code generation condition]
- Fuel control cylinder balance (FCCB) and engine speed variation time remain more than specified for approx. 1 minute.
  (Warning lamp is lit and diagnosis code is displayed on first establishment of code generation condition.)

[Diagnosis check timing]
- When code generation condition is established after starter switch ON

[Diagnostic requirement]
- Engine in operation
- 2 seconds passed after starter switch ON
- 2 seconds passed after cranking
- Battery voltage: normal
- Engine speed sensor: normal in signal
- Post injection: none

[Control effected by electronic control unit during fault]
- Learning of FCCB (fuel control cylinder balance) is inhibited.

[Probable cause of trouble]
- Leakage and air are found in fuel system.
- Abnormality of flow damper (No. 2 cylinder)
- Abnormality of electronic control unit
- Abnormality of injector (No. 2 cylinder)

[Recoverability]
<Control during fault>
- Recovered if signal becomes normal with starter switch in ON position.

<Fault code>
- To erase, execute Memory Clear.

[Fault diagnosis]

- Perform checks in the sequence of the following steps.

Step 1	Inspection items		Inspection by control data
	Maintenance item		Perform actuator test item No. BF “Injector Test 5”.
	Inspection condition		• Engine start: At idle • Transmission: neutral • Vehicle speed: 0 km/h {0 MPH} • Other diagnosis codes do not occur.
	Requirements		Engine variation and status remain uncharged even if injector (No. 2 cylinder) is put in injection stopped state.
	Inspection result (Is the judging standard satisfied?)	YES	Go to step 2.
		NO	Go to step 3.

Step 2	Inspection items		Checking of air bleeding
	Maintenance item		Bleed air from fuel filter.
	Inspection condition		Starter switch: OFF
	Requirements		Air bleeding is effected to check if problem is solved (Item No. 62 “Flow Damper (#2)” is checked and if frequency of operation is not increased, problem is judged solved).
	Inspection result (Is the judging standard satisfied?)	YES	Transient fault due to trapped air
		NO	Replacement of injector

Step 3	Inspection items		Inspection by control data
	Maintenance item		Measurement of following service data • Item No. 5B “Pump Adjustment Value (Last Time)” • Item No. 5C “Pump Adjustment Value (This Time)”
	Inspection condition		Engine start: At idle
	Requirements		–200 to +200 mA
	Inspection result (Is the judging standard satisfied?)	YES	Replacement of injector
		NO	Go to step 4.

Step 4	Inspection items		Inspection by control data
	Maintenance item		Perform actuator test item No. C2 “Pump Adjustment Value Clear” to initialize pump learning value.
	Inspection condition		–
	Requirements		Problem is solved with learning value initialized (Item No. 62 “Flow Damper (#2)” is checked and if frequency of operation is not increased, problem is judged solved).
	Inspection result (Is the judging standard satisfied?)	YES	Transient fault due to improper pump learning value
		NO	Replacement of injector (rail is replaced if problem remains unsolved after injector replacement)

[Fault code]
Diagnosis code: P1242/Flash code: 73
[Monitor]
Abnormality of flow damper (No. 3 cylinder)
[Fault (outline)]
Faulty flow damper check
[Diagnosis check]
- Operation of flow damper is monitored.

[Code generation condition]
- Fuel control cylinder balance (FCCB) and engine speed variation time remain more than specified for approx. 1 minute.
  (Warning lamp is lit and diagnosis code is displayed on first establishment of code generation condition.)

[Diagnosis check timing]
- When code generation condition is established after starter switch ON

[Diagnostic requirement]
- Engine in operation
- 2 seconds passed after starter switch ON
- 2 seconds passed after cranking
- Battery voltage: normal
- Engine speed sensor: normal in signal
- Post injection: none

[Control effected by electronic control unit during fault]
- Learning of FCCB (fuel control cylinder balance) is inhibited.

[Probable cause of trouble]
- Leakage and air are found in fuel system.
- Abnormality of flow damper (No. 3 cylinder)
- Abnormality of electronic control unit
- Abnormality of injector (No. 3 cylinder)

[Recoverability]
<Control during fault>
- Recovered if signal becomes normal with starter switch in ON position.

<Fault code>
- To erase, execute Memory Clear.

[Fault diagnosis]

- Perform checks in the sequence of the following steps.

Step 1	Inspection items		Inspection by control data
	Maintenance item		Perform actuator test item No. BD “Injector Test 3”.
	Inspection condition		• Engine start: At idle • Transmission: neutral • Vehicle speed: 0 km/h {0 MPH} • Other diagnosis codes do not occur.
	Requirements		Engine variation and status remain uncharged even if injector (No. 3 cylinder) is put in injection stopped state.
	Inspection result (Is the judging standard satisfied?)	YES	Go to step 2.
		NO	Go to step 3.

Step 2	Inspection items		Checking of air bleeding
	Maintenance item		Bleed air from fuel filter.
	Inspection condition		Starter switch: OFF
	Requirements		Air bleeding is effected to check if problem is solved (Item No. 63 “Flow Damper (#3)” is checked and if frequency of operation is not increased, problem is judged solved).
	Inspection result (Is the judging standard satisfied?)	YES	Transient fault due to trapped air
		NO	Replacement of injector

Step 3	Inspection items		Inspection by control data
	Maintenance item		Measurement of following service data • Item No. 5B “Pump Adjustment Value (Last Time)” • Item No. 5C “Pump Adjustment Value (This Time)”
	Inspection condition		Engine start: At idle
	Requirements		–200 to +200 mA
	Inspection result (Is the judging standard satisfied?)	YES	Replacement of injector
		NO	Go to step 4.

Step 4	Inspection items		Inspection by control data
	Maintenance item		Perform actuator test item No. C2 “Pump Adjustment Value Clear” to initialize pump learning value.
	Inspection condition		–
	Requirements		Problem is solved with learning value initialized (Item No. 63 “Flow Damper (#3)” is checked and if frequency of operation is not increased, problem is judged solved).
	Inspection result (Is the judging standard satisfied?)	YES	Transient fault due to improper pump learning value
		NO	Replacement of injector (rail is replaced if problem remains unsolved after injector replacement)

[Fault code]
Diagnosis code: P1243/Flash code: 74
[Monitor]
Abnormality of flow damper (No. 4 cylinder)
[Fault (outline)]
Faulty flow damper check
[Diagnosis check]
- Operation of flow damper is monitored.

[Code generation condition]
- Fuel control cylinder balance (FCCB) and engine speed variation time remain more than specified for approx. 1 minute.
  (Warning lamp is lit and diagnosis code is displayed on first establishment of code generation condition.)

[Diagnosis check timing]
- When code generation condition is established after starter switch ON

[Diagnostic requirement]
- Engine in operation
- 2 seconds passed after starter switch ON
- 2 seconds passed after cranking
- Battery voltage: normal
- Engine speed sensor: normal in signal
- Post injection: none

[Control effected by electronic control unit during fault]
- Learning of FCCB (fuel control cylinder balance) is inhibited.

[Probable cause of trouble]
- Leakage and air are found in fuel system.
- Abnormality of flow damper (No. 4 cylinder)
- Abnormality of electronic control unit
- Abnormality of injector (No. 4 cylinder)

[Recoverability]
<Control during fault>
- Recovered if signal becomes normal with starter switch in ON position.

<Fault code>
- To erase, execute Memory Clear.

[Fault diagnosis]

- Perform checks in the sequence of the following steps.

Step 1	Inspection items		Inspection by control data
	Maintenance item		Perform actuator test item No. C0 “Injector Test 6”.
	Inspection condition		• Engine start: At idle • Transmission: neutral • Vehicle speed: 0 km/h {0 MPH} • Other diagnosis codes do not occur.
	Requirements		Engine variation and status remain uncharged even if injector (No. 4 cylinder) is put in injection stopped state.
	Inspection result (Is the judging standard satisfied?)	YES	Go to step 2.
		NO	Go to step 3.

Step 2	Inspection items		Checking of air bleeding
	Maintenance item		Bleed air from fuel filter.
	Inspection condition		Starter switch: OFF
	Requirements		Air bleeding is effected to check if problem is solved (Item No. 64 “Flow Damper (#4)” is checked and if frequency of operation is not increased, problem is judged solved).
	Inspection result (Is the judging standard satisfied?)	YES	Transient fault due to trapped air
		NO	Replacement of injector

Step 3	Inspection items		Inspection by control data
	Maintenance item		Measurement of following service data • Item No. 5B “Pump Adjustment Value (Last Time)” • Item No. 5C “Pump Adjustment Value (This Time)”
	Inspection condition		Engine start: At idle
	Requirements		–200 to +200 mA
	Inspection result (Is the judging standard satisfied?)	YES	Replacement of injector
		NO	Go to step 4.

Step 4	Inspection items		Inspection by control data
	Maintenance item		Perform actuator test item No. C2 “Pump Adjustment Value Clear” to initialize pump learning value.
	Inspection condition		–
	Requirements		Problem is solved with learning value initialized (Item No. 64 “Flow Damper (#4)” is checked and if frequency of operation is not increased, problem is judged solved).
	Inspection result (Is the judging standard satisfied?)	YES	Transient fault due to improper pump learning value
		NO	Replacement of injector (rail is replaced if problem remains unsolved after injector replacement)

[Fault code]
Diagnosis code: P1244/Flash code: 75
[Monitor]
Abnormality of flow damper (No. 5 cylinder)
[Fault (outline)]
Faulty flow damper check
[Diagnosis check]
- Operation of flow damper is monitored.

[Code generation condition]
- Fuel control cylinder balance (FCCB) and engine speed variation time remain more than specified for approx. 1 minute.
  (Warning lamp is lit and diagnosis code is displayed on first establishment of code generation condition.)

[Diagnosis check timing]
- When code generation condition is established after starter switch ON

[Diagnostic requirement]
- Engine in operation
- 2 seconds passed after starter switch ON
- 2 seconds passed after cranking
- Battery voltage: normal
- Engine speed sensor: normal in signal
- Post injection: none

[Control effected by electronic control unit during fault]
- Learning of FCCB (fuel control cylinder balance) is inhibited.

[Probable cause of trouble]
- Leakage and air are found in fuel system.
- Abnormality of flow damper (No. 5 cylinder)
- Abnormality of electronic control unit
- Abnormality of injector (No. 5 cylinder)

[Recoverability]
<Control during fault>
- Recovered if signal becomes normal with starter switch in ON position.

<Fault code>
- To erase, execute Memory Clear.

[Fault diagnosis]

- Perform checks in the sequence of the following steps.

Step 1	Inspection items		Inspection by control data
	Maintenance item		Perform actuator test item No. BC “Injector Test 2”.
	Inspection condition		• Engine start: At idle • Transmission: neutral • Vehicle speed: 0 km/h {0 MPH} • Other diagnosis codes do not occur.
	Requirements		Engine variation and status remain uncharged even if injector (No. 5 cylinder) is put in injection stopped state.
	Inspection result (Is the judging standard satisfied?)	YES	Go to step 2.
		NO	Go to step 3.

Step 2	Inspection items		Checking of air bleeding
	Maintenance item		Bleed air from fuel filter.
	Inspection condition		Starter switch: OFF
	Requirements		Air bleeding is effected to check if problem is solved (Item No. 65 “Flow Damper (#5)” is checked and if frequency of operation is not increased, problem is judged solved).
	Inspection result (Is the judging standard satisfied?)	YES	Transient fault due to trapped air
		NO	Replacement of injector

Step 3	Inspection items		Inspection by control data
	Maintenance item		Measurement of following service data • Item No. 5B “Pump Adjustment Value (Last Time)” • Item No. 5C “Pump Adjustment Value (This Time)”
	Inspection condition		Engine start: At idle
	Requirements		–200 to +200 mA
	Inspection result (Is the judging standard satisfied?)	YES	Replacement of injector
		NO	Go to step 4.

Step 4	Inspection items		Inspection by control data
	Maintenance item		Perform actuator test item No. C2 “Pump Adjustment Value Clear” to initialize pump learning value.
	Inspection condition		–
	Requirements		Problem is solved with learning value initialized (Item No. 65 “Flow Damper (#5)” is checked and if frequency of operation is not increased, problem is judged solved).
	Inspection result (Is the judging standard satisfied?)	YES	Transient fault due to improper pump learning value
		NO	Replacement of injector (rail is replaced if problem remains unsolved after injector replacement)

[Fault code]
Diagnosis code: P1245/Flash code: 76
[Monitor]
Abnormality of flow damper (No. 6 cylinder)
[Fault (outline)]
Faulty flow damper check
[Diagnosis check]
- Operation of flow damper is monitored.

[Code generation condition]
- Fuel control cylinder balance (FCCB) and engine speed variation time remain more than specified for approx. 1 minute.
  (Warning lamp is lit and diagnosis code is displayed on first establishment of code generation condition.)

[Diagnosis check timing]
- When code generation condition is established after starter switch ON

[Diagnostic requirement]
- Engine in operation
- 2 seconds passed after starter switch ON
- 2 seconds passed after cranking
- Battery voltage: normal
- Engine speed sensor: normal in signal
- Post injection: none

[Control effected by electronic control unit during fault]
- Learning of FCCB (fuel control cylinder balance) is inhibited.

[Probable cause of trouble]
- Leakage and air are found in fuel system.
- Abnormality of flow damper (No. 6 cylinder)
- Abnormality of electronic control unit
- Abnormality of injector (No. 6 cylinder)

[Recoverability]
<Control during fault>
- Recovered if signal becomes normal with starter switch in ON position.

<Fault code>
- Automatically cleared at 40th warm up cycle after warning lamp is extinguished.
  (To clear as desired, erase from the memory.)

Warm up cycle : “Starter switch ON to start engine till starter switch OFF after coolant temperature increased and engine warmed up” constitutes 1 warm up cycle.

[Fault diagnosis]

- Perform checks in the sequence of the following steps.

Step 1	Inspection items		Inspection by control data
	Maintenance item		Perform actuator test item No. BE “Injector Test 4”.
	Inspection condition		• Engine start: At idle • Transmission: neutral • Vehicle speed: 0 km/h {0 MPH} • Other diagnosis codes do not occur.
	Requirements		Engine variation and status remain uncharged even if injector (No. 6 cylinder) is put in injection stopped state.
	Inspection result (Is the judging standard satisfied?)	YES	Go to step 2.
		NO	Go to step 3.

Step 2	Inspection items		Checking of air bleeding
	Maintenance item		Bleed air from fuel filter.
	Inspection condition		Starter switch: OFF
	Requirements		Air bleeding is effected to check if problem is solved (Item No. 66 “Flow Damper (#6)” is checked and if frequency of operation is not increased, problem is judged solved).
	Inspection result (Is the judging standard satisfied?)	YES	Transient fault due to trapped air
		NO	Replacement of injector

Step 3	Inspection items		Inspection by control data
	Maintenance item		Measurement of following service data • Item No. 5B “Pump Adjustment Value (Last Time)” • Item No. 5C “Pump Adjustment Value (This Time)”
	Inspection condition		Engine start: At idle
	Requirements		–200 to +200 mA
	Inspection result (Is the judging standard satisfied?)	YES	Replacement of injector
		NO	Go to step 4.

Step 4	Inspection items		Inspection by control data
	Maintenance item		Perform actuator test item No. C2 “Pump Adjustment Value Clear” to initialize pump learning value.
	Inspection condition		–
	Requirements		Problem is solved with learning value initialized (Item No. 66 “Flow Damper (#6)” is checked and if frequency of operation is not increased, problem is judged solved).
	Inspection result (Is the judging standard satisfied?)	YES	Transient fault due to improper pump learning value
		NO	Replacement of injector (rail is replaced if problem remains unsolved after injector replacement)

[Fault code]
Diagnosis code: P1410/Flash code: 92
[Monitor]
Excessive exhaust pressure
[Fault (outline)]
Clogged diesel particulate filter
[Diagnosis check]
- Pressure before ceramic filter is monitored by DPF absolute pressure sensor for clogging of ceramic filter.

[Code generation condition]
- Pressure before ceramic filter remains over 163 kPa {24 psi, 1.7 kgf/cm^2} for approx. 3 seconds.
  (Warning lamp is lit and diagnosis code is displayed on first establishment of code generation condition.)

[Diagnosis check timing]
- When code generation condition is established after starter switch ON

[Diagnostic requirement]
- 2 seconds passed after starter switch ON
- 2 seconds passed after cranking
- Battery voltage: normal
- Diesel particulate filter: not in regeneration
- Exhaust gas recirculation control: active

[Control effected by electronic control unit during fault]
- Injection quantity is limited.
- Exhaust gas recirculation control is stopped.
- Throttle control is stopped.
- Diesel particulate filter regeneration (manual or automatic) is stopped.
- Auto cruise control is stopped.
- Fault detection for controller area network communication is stopped.

[Probable cause of trouble]
- Excessive smoke emission (due to malfunction of engine proper, common rail or exhaust gas recirculation system)
- Abnormality of waste gate hose and exhaust shutter hose
- Abnormality of air flow sensor
- Abnormality of DPF absolute pressure sensor
- Abnormality of DPF pressure sensor (DIFF)
- Abnormality of diesel particulate filter

[Recoverability]
<Control during fault>
- Recovered if signal becomes normal when starter switch is turned OFF to ON (power supply resumed to electronic control unit).

<Warning lamp>
- Extinguished after input of normal signal.

<Fault code>
- If code recovered to normal, automatically cleared at 40th warm up cycle after warning lamp is lit.
  (To clear as desired, erase from the memory.)

Warm up cycle : “Starter switch ON to start engine till starter switch OFF after coolant temperature increased and engine warmed up” constitutes 1 warm up cycle.

[Fault diagnosis]

- Perform checks in the sequence of the following steps.

Step 1	Inspection items		Inspection by control data
	Maintenance item		Check if following diagnosis codes occur simultaneously. • P0101 “Airflow Sensor (Plausibility)” • P0102 “Airflow Sensor (Low)” • P0103 “Airflow Sensor (High)” • P0427 “EXH Gas Temp SNSR1 (Low)” • P0428 “EXH Gas Temp SNSR1 (High)” • P0545 “DPF Temp SNSR (upstream) Low” • P0546 “DPF Temp SNSR (upstream) High” • P1660 “DPF Lamp Control Circuit (Low)” • P1661 “DPF Lamp Control Circuit (High)” • P2032 “Exhaust Gas Temp (Low)” • P2033 “Exhaust Gas Temp (High)” • P2453 “DPF Diff SNSR (Plausi) & MFF” • P2454 “DPF Diff SNSR (Low) & MFF” • P2455 “DPF Diff SNSR (High) & MFF”
	Inspection condition		Ensure that each sensor mounting condition is free of abnormalities.
	Requirements		Codes occur.
	Inspection result (Is the judging standard satisfied?)	YES	After inspection of diagnosis code that is occurring, go to step 2.
		NO	Go to step 2.

Step 2	Inspection items		Inspection of DPF absolute sensor unit
	Maintenance item		Measure value of voltage between connector terminal No. 2 (+) and 1 (–).
	Inspection condition		• Apply voltage DC 5V across terminals No. 3 (+) and 1 (–). • Gradually increase applied air pressure.
	Requirements		• –41 ± 3.2 kPa {–5.9 ± 0.5 psi, –0.43 ± 0.03 kgf/cm^2}: 1.875 V • 99 ± 3.2 kPa {14 ± 0.5 psi, 1.0 ± 0.03 kgf/cm^2}: 4.5 V
	Inspection result (Is the judging standard satisfied?)	YES	Go to step 3.
		NO	Replacement of sensor

<Step 2 inspection diagram>

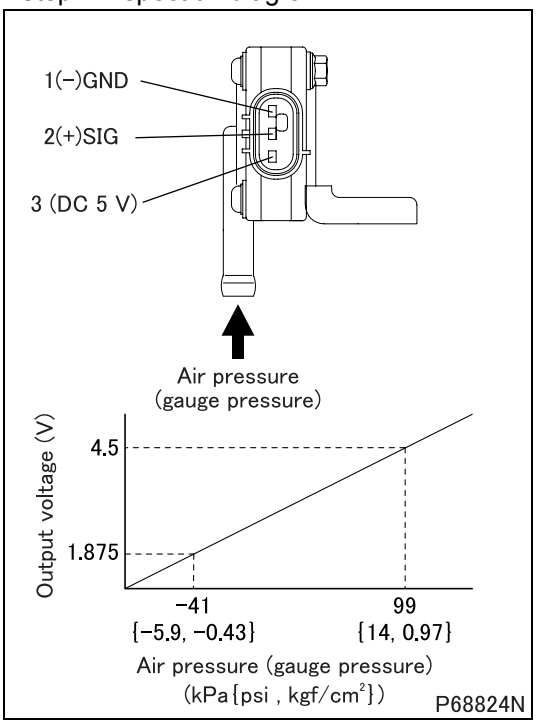

Step 3	Inspection items		Inspection of oil level
	Maintenance item		Inspection of engine oil level
	Inspection condition		Engine is stopped.
	Requirements		Oil level for inspection is not exceeded.
	Inspection result (Is the judging standard satisfied?)	YES	Go to step 4.
		NO	After replacement of oil, go to step 4.

<Step 3 inspection diagram>

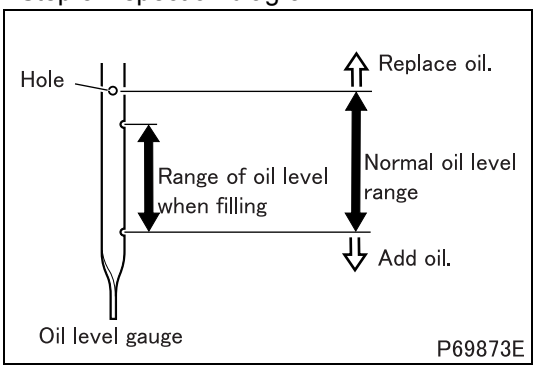

Step 4	Inspection items		Inspection of pressure hose
	Maintenance item		Check pressure hose of DPF absolute pressure sensor and DPF pressure sensor (DIFF) for connection and cracks.
	Inspection condition		–
	Requirements		Nothing abnormal detected
	Inspection result (Is the judging standard satisfied?)	YES	Go to step 5.
		NO	Correction and replacement of hose

Step 5	Inspection items		Unit inspection of diesel particulate filter
	Maintenance item		Check the exhaust passage inside the diesel particulate filter for adhesion of soot in large quantity.
	Inspection condition		Remove diesel particulate filter.
	Requirements		No soot is deposited.
	Inspection result (Is the judging standard satisfied?)	YES	Go to step 6.
		NO	After replacement of ceramic filter, perform resetting the DPF-related information and go to step 7.

<Step 5 inspection diagram>

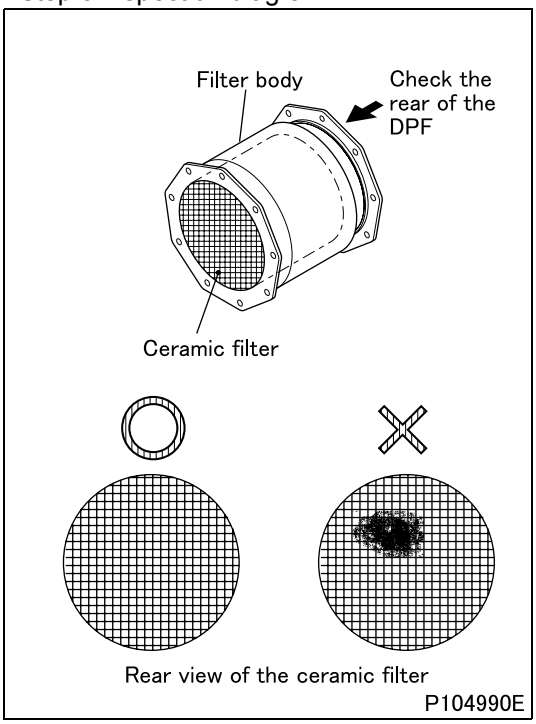

Step 6	Inspection items		Inspection of diesel particulate filter unit for clogging and cleaning of the diesel particulate filter unit (Perform completely.)
	Maintenance item		See Gr15 “Diesel Particulate Filter Unit Inspection for Clogging and Cleaning the Diesel Particulate Filter Unit”.
	Inspection condition		Perform following preparatory works. • Place the transmission in neutral. (place the automatic transmission in P range) • Turn the steering wheel in neutral position and securely apply the parking brake. • Turn off air conditioner not to increase the engine speed. • Check diagnosis code of each electronic control system. If any fault exists, rectify it. • Resetting the DPF-related information (perform “History reset” of Multi-Use Tester) (See Gr15 “Resetting the DPF-related information”.) • Warm up the engine until the engine coolant has been heated to more than 70°C {158°F}. (verify from Service Data “Engine Coolant Temperature” or “35: Water Temperature”)
	Requirements		This diagnosis code does not occur again.
	Inspection result (Is the judging standard satisfied?)	YES	Go to step 7.
		NO	After replacement of electronic control unit, go to step 7.

Step 7	Inspection items		Inspection of exhaust gas
	Maintenance item		Check of exhaust gas (Check whether abnormalities related to engine cause early clogging of diesel particulate filter and adhesion of soot in large quantity in outlet body of diesel particulate filter.)
	Inspection condition		Remove diesel particulate filter, each sensor, pipe and hose.
	Requirements		Exhaust gas is apparently white or black when engine is raced.
	Inspection result (Is the judging standard satisfied?)	YES	Inspect following places. • Common rail system • Exhaust gas recirculation system • Intake throttle control • Exhaust shutter • Air cleaner • Turbocharger • Boost pressure • Compression Pressure
		NO	End of inspection (Be sure to erase diagnosis codes after the end of inspection as engine warning lamp may illuminate by diagnostic function when sensors installed on diesel particulate filter are removed.)

[Fault code]
Diagnosis code: P1411/Flash code: 92
[Monitor]
Diesel particulate filter is overheated.
[Fault (outline)]
Plausibility
[Diagnosis check]
- Temperature after ceramic filter is monitored and regeneration is stopped if filter temperature excessively rises.

[Code generation condition]
- Pressure after ceramic filter remains over 900°C {1620°F} for approx. 3 seconds.
  (Warning lamp is lit and diagnosis code is displayed on first establishment of code generation condition.)

[Diagnosis check timing]
- When code generation condition is established after starter switch ON

[Diagnostic requirement]
- 2 seconds passed after starter switch ON
- 2 seconds passed after cranking
- Battery voltage: normal

[Control effected by electronic control unit during fault]
- Injection quantity is limited.
- Exhaust gas recirculation control is stopped.
- Throttle control is stopped.
- Diesel particulate filter regeneration (manual or automatic) is stopped.

[Probable cause of trouble]
- Excessive smoke emission (due to malfunction of engine proper, common rail or exhaust gas recirculation system)
- Abnormality of diesel particulate filter regeneration control
- Excessive particulate matter (PM) deposit
- Abnormality in electronic control unit

[Recoverability]
<Control during fault>
- Recovered if signal becomes normal when starter switch is turned OFF to ON (power supply resumed to electronic control unit).

<Warning lamp>
- Extinguished after input of normal signal.

<Fault code>
- If code recovered to normal, automatically cleared at 40th warm up cycle after warning lamp is lit.
  (To clear as desired, erase from the memory.)

Warm up cycle : “Starter switch ON to start engine till starter switch OFF after coolant temperature increased and engine warmed up” constitutes 1 warm up cycle.

[Fault diagnosis]

- Perform checks in the sequence of the following steps.

Step 1	Inspection items		Inspection by control data
	Maintenance item		Check if following diagnosis codes occur simultaneously. • P0101 “Airflow Sensor (Plausibility)” • P0102 “Airflow Sensor (Low)” • P0103 “Airflow Sensor (High)” • P0427 “EXH Gas Temp SNSR1 (Low)” • P0428 “EXH Gas Temp SNSR1 (High)” • P0545 “DPF Temp SNSR (upstream) Low” • P0546 “DPF Temp SNSR (upstream) High” • P1660 “DPF Lamp Control Circuit (Low)” • P1661 “DPF Lamp Control Circuit (High)” • P2032 “Exhaust Gas Temp (Low)” • P2033 “Exhaust Gas Temp (High)” • P2453 “DPF Diff SNSR (Plausi) & MFF” • P2454 “DPF Diff SNSR (Low) & MFF” • P2455 “DPF Diff SNSR (High) & MFF”
	Inspection condition		Ensure that each sensor mounting condition is free of abnormalities.
	Requirements		Codes occur.
	Inspection result (Is the judging standard satisfied?)	YES	After inspection of diagnosis code that is occurring, go to step 2.
		NO	Go to step 2.

Step 2	Inspection items		Inspection of DPF temperature sensor 2 unit
	Maintenance item		Measure value of resistance between terminals No. 1 and 2.
	Inspection condition		• Put DPF temperature sensor 2 in vessel filled with engine oil. • Heat the oil to each of the specified temperatures. Stir the oil well while doing so.
	Requirements		• 20°C {68°F} : 241.8 kΩ • 50°C {122°F} : 106.2 $^{+74.3}_{-41.8}$ kΩ • 100°C {212°F} : 33.56 $^{+17.60}_{-10.60}$ kΩ • 150°C {302°F} : 13.90 $^{+5.36}_{-3.60}$ kΩ • 200°C {392°F} : 6.896 $^{+2.064}_{-1.252}$ kΩ
	Inspection result (Is the judging standard satisfied?)	YES	Go to step 3.
		NO	Cleaning of sensor

<Step 2 inspection diagram>

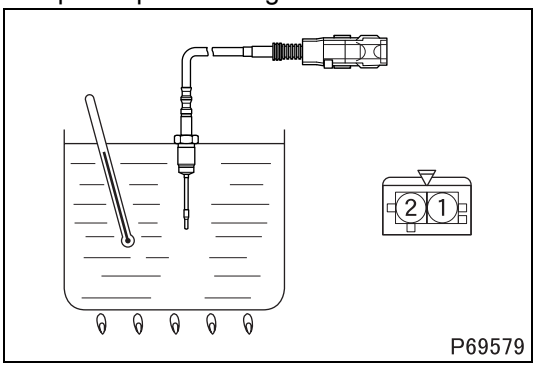

Step 3	Inspection items		Inspection of oil level
	Maintenance item		Inspection of engine oil level
	Inspection condition		Engine is stopped.
	Requirements		Oil level for inspection is not exceeded.
	Inspection result (Is the judging standard satisfied?)	YES	Go to step 4.
		NO	After replacement of oil, go to step 4.

<Step 3 inspection diagram>

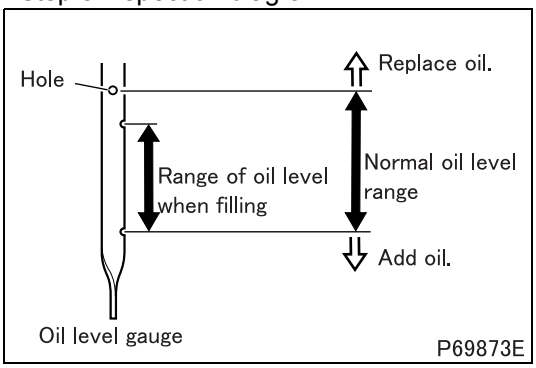

Step 4	Inspection items		Inspection of pressure hose
	Maintenance item		Check pressure hose of DPF absolute pressure sensor and DPF pressure sensor (DIFF) for connection and cracks.
	Inspection condition		–
	Requirements		Nothing abnormal detected
	Inspection result (Is the judging standard satisfied?)	YES	Go to step 5.
		NO	After correction and replacement of hose, go to step 5.

Step 5	Inspection items		Unit inspection of diesel particulate filter
	Maintenance item		Check the exhaust passage inside the diesel particulate filter for adhesion of soot in large quantity.
	Inspection condition		Remove diesel particulate filter.
	Requirements		No soot is deposited.
	Inspection result (Is the judging standard satisfied?)	YES	Go to step 6.
		NO	After replacement of ceramic filter, perform resetting the DPF-related information and go to step 7.

<Step 5 inspection diagram>

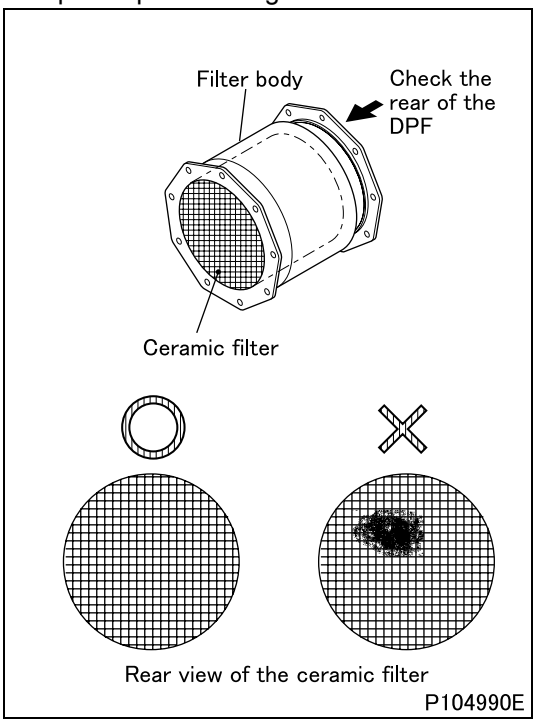

Step 6	Inspection items		Inspection of diesel particulate filter unit for clogging and cleaning of the diesel particulate filter unit (Perform completely.)
	Maintenance item		See Gr15 “Diesel Particulate Filter Unit Inspection for Clogging and Cleaning the Diesel Particulate Filter Unit”.
	Inspection condition		Perform following preparatory works. • Place the transmission in neutral. (place the automatic transmission in P range) • Turn the steering wheel in neutral position and securely apply the parking brake. • Turn off air conditioner not to increase the engine speed. • Check diagnosis code of each electronic control system. If any fault exists, rectify it. • Resetting the DPF-related information (perform “History reset” of Multi-Use Tester) (See Gr15 “Resetting the DPF-related information”.) • Warm up the engine until the engine coolant has been heated to more than 70°C {158°F}. (verify from Service Data “Engine Coolant Temperature” or “35: Water Temperature”)
	Requirements		This diagnosis code does not occur again.
	Inspection result (Is the judging standard satisfied?)	YES	Go to step 7.
		NO	After replacement of electronic control unit, go to step 7.

Step 7	Inspection items		Inspection of exhaust gas
	Maintenance item		Check of exhaust gas (Check whether abnormalities related to engine cause early clogging of diesel particulate filter and adhesion of soot in large quantity in outlet body of diesel particulate filter.)
	Inspection condition		Remove diesel particulate filter, each sensor, pipe and hose.
	Requirements		Exhaust gas is apparently white or black when engine is raced.
	Inspection result (Is the judging standard satisfied?)	YES	Inspect following places. • Common rail system • Exhaust gas recirculation system • Intake throttle control • Exhaust shutter • Air cleaner • Turbocharger • Boost pressure • Compression Pressure
		NO	End of inspection (Be sure to erase diagnosis codes after the end of inspection as engine warning lamp may illuminate by diagnostic function when sensors installed on diesel particulate filter are removed.)

[Fault code]
Diagnosis code: P1412/Flash code: 92
[Monitor]
Long lasting abnormality at 1st stage of automatic diesel particulate filter regeneration
[Fault (outline)]
Improperly performed automatic regeneration of diesel particulate filter
[Diagnosis check]
- Temperature before ceramic filter is monitored by DPF temperature sensor 1 for temperature status during automatic diesel particulate filter regeneration.

NOTE

- **This diagnosis code can occur depending on conditions under which vehicle is running even if engine has no abnormality.**

[Code generation condition]
- Diesel particulate filter temperature remains at 250°C {482°F} or lower even after driving for 5 km following start of automatic diesel particulate filter regeneration.
  (Warning lamp is lit and diagnosis code is displayed on first establishment of code generation condition.)

[Diagnosis check timing]
- When code generation condition is established after starter switch ON

[Diagnostic requirement]
- 2 seconds passed after starter switch ON
- 2 seconds passed after cranking
- Battery voltage: normal

[Control effected by electronic control unit during fault]
- Automatic diesel particulate filter regeneration is stopped.

[Probable cause of trouble]
- Abnormality of diesel particulate filter regeneration control
- Abnormality of DPF temperature sensor 1
- Abnormality in electronic control unit
- Abnormality of common rail
- Abnormality of diesel particulate filter (front oxidation catalyst)

[Recoverability]
<Control during fault>
- Recovered after automatic regeneration after a certain time of interruption (about 10 minutes).

<Fault code>
- Automatically cleared at 40th warm up cycle after recovery of normal state.
  (To erase, execute Memory Clear.)

Warm up cycle : “Starter switch ON to start engine till starter switch OFF after coolant temperature increased and engine warmed up” constitutes 1 warm up cycle.

[Electronic Control Unit Connection Diagram]

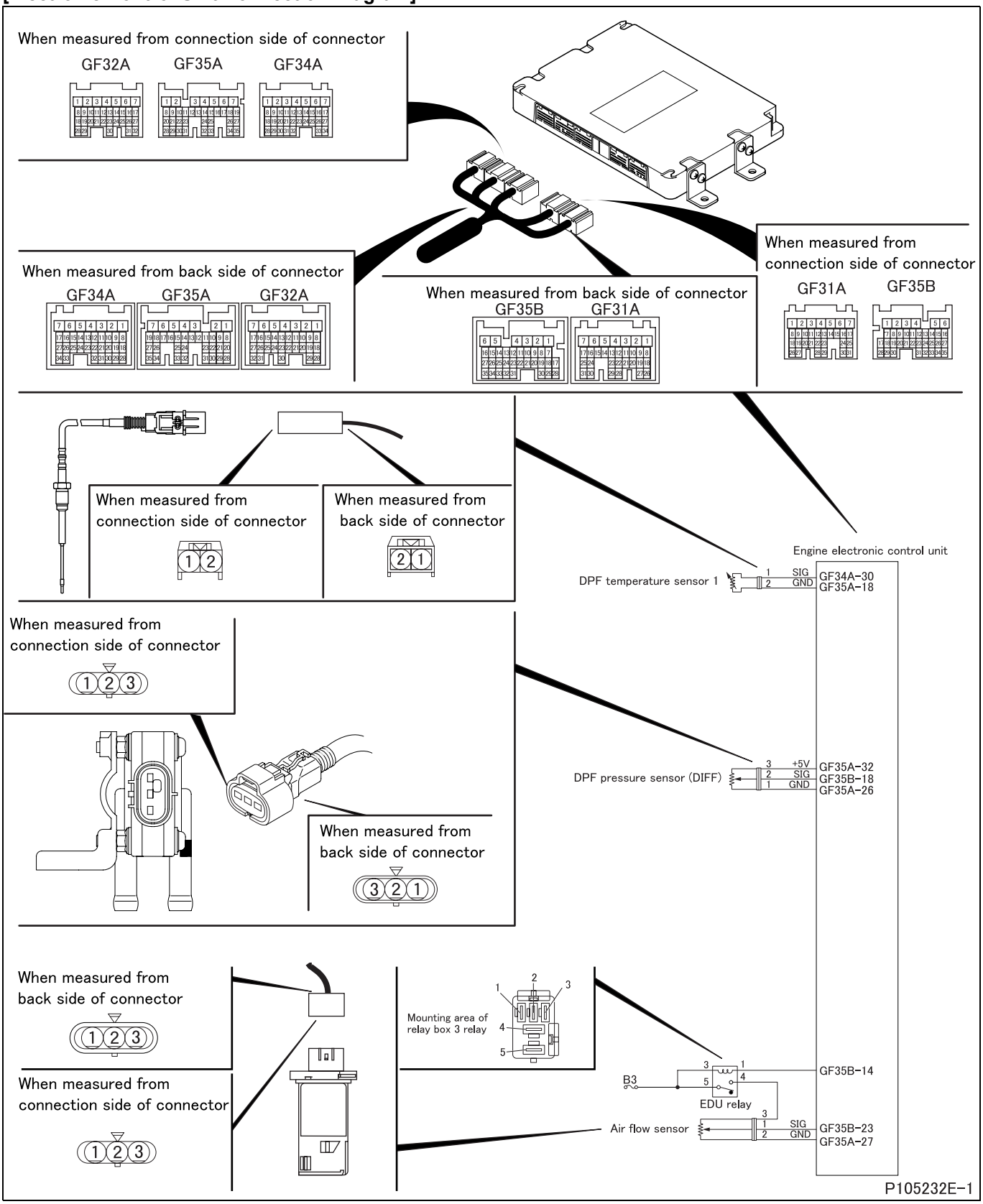

[Parts Identification and Location]

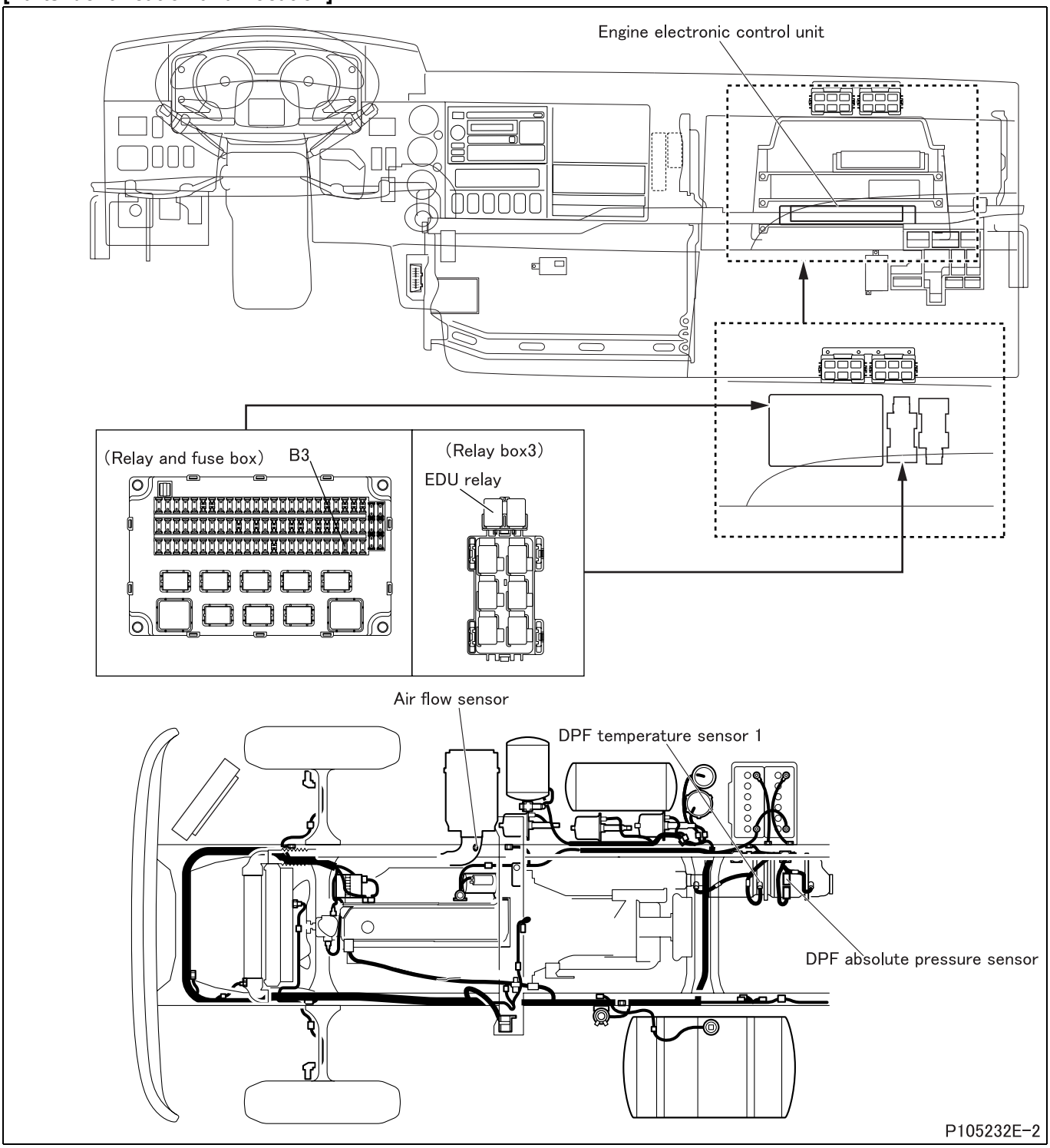

[Fault diagnosis]

- Perform checks in the sequence of the following steps.

Step 1	Inspection items		Inspection by control data
	Maintenance item		Check if following diagnosis codes occur simultaneously. • P0101 “Airflow Sensor (Plausibility)” • P0102 “Airflow Sensor (Low)” • P0103 “Airflow Sensor (High)” • P0427 “EXH Gas Temp SNSR1 (Low)” • P0428 “EXH Gas Temp SNSR1 (High)” • P0545 “DPF Temp SNSR (upstream) Low” • P0546 “DPF Temp SNSR (upstream) High” • P1660 “DPF Lamp Control Circuit (Low)” • P1661 “DPF Lamp Control Circuit (High)” • P2032 “Exhaust Gas Temp (Low)” • P2033 “Exhaust Gas Temp (High)” • P2453 “DPF Diff SNSR (Plausi) & MFF” • P2454 “DPF Diff SNSR (Low) & MFF” • P2455 “DPF Diff SNSR (High) & MFF”
	Inspection condition		Ensure that each sensor mounting condition is free of abnormalities.
	Requirements		Codes occur.
	Inspection result (Is the judging standard satisfied?)	YES	After inspection of diagnosis code that is occurring, go to step 2.
		NO	Go to step 2.

Step 2	Inspection items		Inspection of DPF temperature sensor 1 unit
	Maintenance item		Measure value of resistance between terminal No. 1 and 2.
	Inspection condition		• Put DPF temperature sensor 1 in vessel filled with engine oil. • Heat the oil to each of the specified temperatures. Stir the oil well while doing so.
	Requirements		• 20°C {68°F} : 241.8 kΩ • 50°C {122°F} : 106.2 $^{+74.3}_{-41.8}$ kΩ • 100°C {212°F} : 33.56 $^{+17.60}_{-10.60}$ kΩ • 150°C {302°F} : 13.90 $^{+5.36}_{-3.60}$ kΩ • 200°C {392°F} : 6.896 $^{+2.064}_{-1.252}$ kΩ
	Inspection result (Is the judging standard satisfied?)	YES	Go to step 3.
		NO	Cleaning of sensor

<Step 2 inspection diagram>

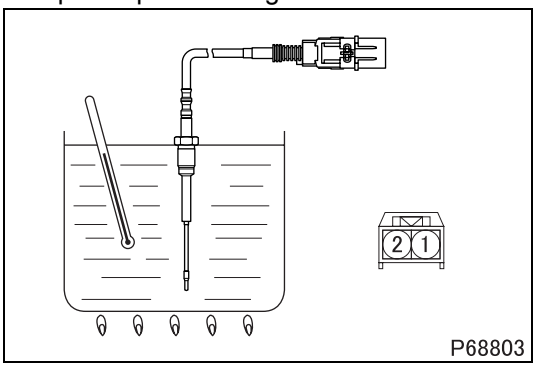

Step 3	Inspection items		Inspection of oil level
	Maintenance item		Inspection of engine oil level
	Inspection condition		Engine is stopped.
	Requirements		Oil level for inspection is not exceeded.
	Inspection result (Is the judging standard satisfied?)	YES	Go to step 4.
		NO	After replacement of oil, go to step 4.

<Step 3 inspection diagram>

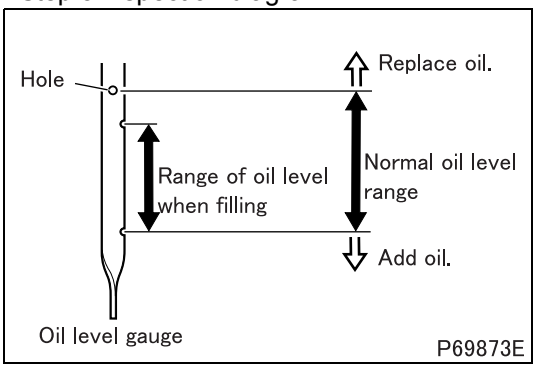

Step 4	Inspection items		Inspection of pressure hose
	Maintenance item		Check pressure hose of DPF absolute pressure sensor and DPF pressure sensor (DIFF) for connection and cracks.
	Inspection condition		–
	Requirements		Nothing abnormal detected
	Inspection result (Is the judging standard satisfied?)	YES	Go to step 5.
		NO	Correction and replacement of hose

Step 5	Inspection items		Inspection of DPF pressure sensor (DIFF) unit
	Maintenance item		Measure value of voltage between connector terminal No. 2 (+) and 1 (–).
	Inspection condition		• Apply voltage DC 5 V across terminals No. 3 (+) and 1 (–). • Gradually increase applied air pressure.
	Requirements		• 0 ± 3.5 kPa {0 ± 0.5 psi, 0 ± 0.04 kgf/cm^2}: 1 V • 100 ± 3.5 kPa {15 ± 0.5 psi, 1.02 ± 0.04 kgf/cm^2}: 4.5 V
	Inspection result (Is the judging standard satisfied?)	YES	Go to step 6.
		NO	Replacement of sensor

<Step 5 inspection diagram>

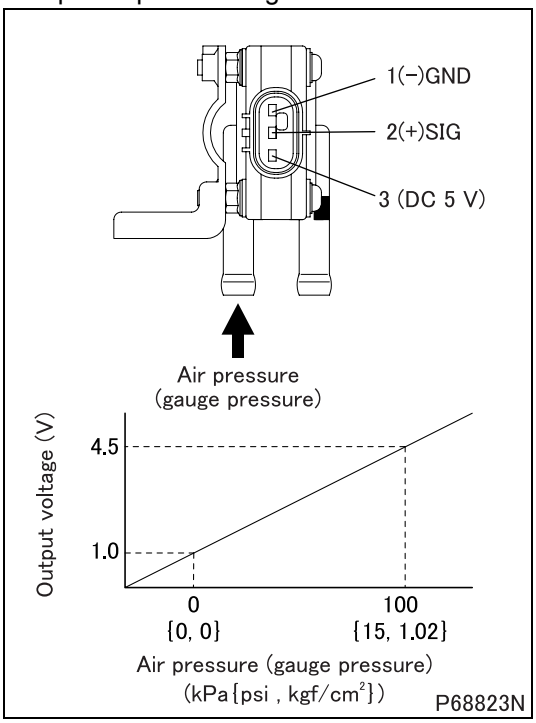

Step 6	Inspection items		Inspection of sensor unit
	Maintenance item		Since inspection of single part is not easy, whether characteristics are deteriorated or not must be checked for the sensor mounted on the current vehicle by measuring and comparing the amount of sensor intake air of the sensor currently mounted on vehicle and that replaced with new one by the service data. **(1) Prepare for inspection** • Clean or replace air cleaner element. • Prepare a new air flow sensor. • Warm up the engine fully. **(2) Measure the intake air of current sensor** • Keep pressing the accelerator pedal until it bottom the stopper bolt from the idling state. (no load maximum rotation) • Measure the following items from among “Service data”. **<General Scanning Tool used>** • Engine speed: “Ne” (rpm) • Intake air flow rate: “Air Flow Rate from MAFS” (g/s) **<Multi-Use Tester used>** • Engine speed: 01 “Engine Revolution” (rpm) • Intake air flow rate: 3A “Air Flow Sensor Output” (g/hr) **(3) Measure the intake air of new sensor** • Replace the currently mounted sensor with a new sensor. • Keep pressing the accelerator pedal until it bottom the stopper bolt from the idling state. (no load maximum rotation) • Measure intake air flow at the same rpm as that of engine revolution in item (2) of “Service data”. **(4) Comparison whether characteristics are deteriorated** • Calculate the characteristics deterioration factor (%) by the following equation. • Characteristics deterioration factor (%) = (intake air of new item – current intake air) × 100/intake air of new item.
	Inspection condition		–
	Requirements		10% or less
	Inspection result (Is the judging standard satisfied?)	YES	Go to step 7.
		NO	Replacement of sensor

Step 7	Inspection items		Inspection by control data
	Maintenance item		Perform actuator test item No. B9 “Fuel Leak Check”.
	Inspection condition		Engine start: At idle
	Requirements		There is no leak from injectors (six).
	Inspection result (Is the judging standard satisfied?)	YES	Replacement of diesel particulate filter
		NO	Replacement of injector

[Fault code]
Diagnosis code: P1413/Flash code: 92
[Monitor]
Low temperature abnormality at 2nd stage of automatic diesel particulate filter regeneration
[Fault (outline)]
Improperly performed automatic regeneration of diesel particulate filter
[Diagnosis check]
- Temperature before ceramic filter is monitored by DPF temperature sensor 1 for temperature status during automatic diesel particulate filter regeneration.

NOTE
- **This diagnosis code can occur depending on conditions under which vehicle is running even if engine has no abnormality.**

[Code generation condition]
- Temperature of diesel particulate filter being automatically regenerated remains at 550°C {1022°F} or lower for 3 minutes.
  (Warning lamp is lit and diagnosis code is displayed on first establishment of code generation condition.)

[Diagnosis check timing]
- When code generation condition is established after starter switch ON

[Diagnostic requirement]
- 2 seconds passed after starter switch ON
- 2 seconds passed after cranking
- Battery voltage: normal

[Control effected by electronic control unit during fault]
- Automatic diesel particulate filter regeneration is stopped.

[Probable cause of trouble]
- Abnormality of diesel particulate filter regeneration control
- Abnormality of DPF temperature sensor 1
- Abnormality in electronic control unit
- Abnormality of common rail
- Abnormality of diesel particulate filter (front oxidation catalyst)

[Recoverability]
<Control during fault>
- Recovered after automatic regeneration after a certain time of interruption (about 10 minutes).

<Fault code>
- Automatically cleared at 40th warm up cycle after recovery of normal state.
  (To erase, execute Memory Clear.)

Warm up cycle : “Starter switch ON to start engine till starter switch OFF after coolant temperature increased and engine warmed up” constitutes 1 warm up cycle.

[Electronic Control Unit Connection Diagram]

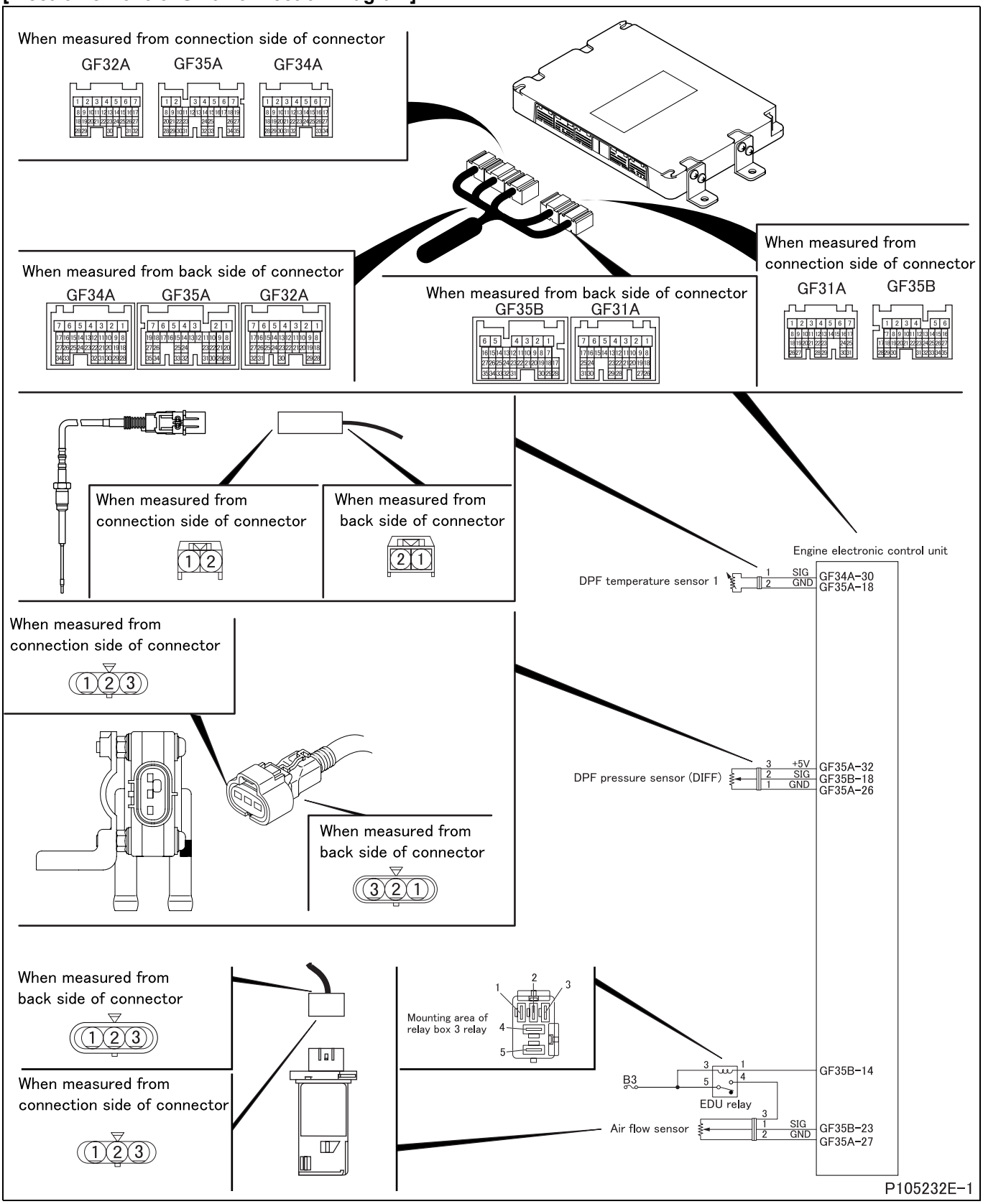

[Parts Identification and Location]

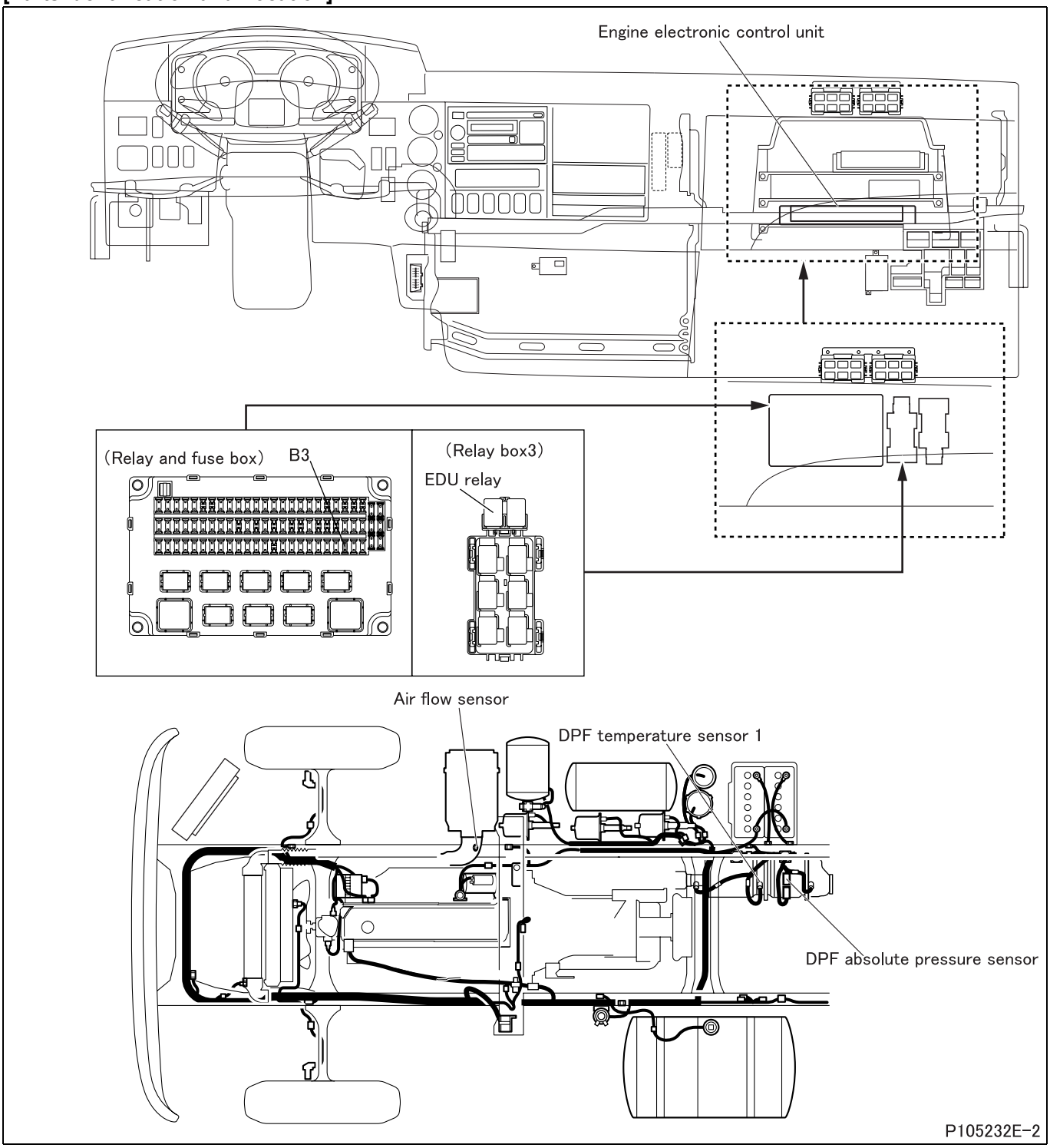

[Fault diagnosis]

- Perform checks in the sequence of the following steps.

Step 1	Inspection items		Inspection by control data
	Maintenance item		Check if following diagnosis codes occur simultaneously. • P0101 “Airflow Sensor (Plausibility)” • P0102 “Airflow Sensor (Low)” • P0103 “Airflow Sensor (High)” • P0427 “EXH Gas Temp SNSR1 (Low)” • P0428 “EXH Gas Temp SNSR1 (High)” • P0545 “DPF Temp SNSR (upstream) Low” • P0546 “DPF Temp SNSR (upstream) High” • P1660 “DPF Lamp Control Circuit (Low)” • P1661 “DPF Lamp Control Circuit (High)” • P2032 “Exhaust Gas Temp (Low)” • P2033 “Exhaust Gas Temp (High)” • P2453 “DPF Diff SNSR (Plausi) & MFF” • P2454 “DPF Diff SNSR (Low) & MFF” • P2455 “DPF Diff SNSR (High) & MFF”
	Inspection condition		Ensure that each sensor mounting condition is free of abnormalities.
	Requirements		Codes occur.
	Inspection result (Is the judging standard satisfied?)	YES	After inspection of diagnosis code that is occurring, go to step 2.
		NO	Go to step 2.

Step 2	Inspection items		Inspection of DPF temperature sensor 1 unit
	Maintenance item		Measure value of resistance between terminal No. 1 and 2.
	Inspection condition		• Put DPF temperature sensor 1 in vessel filled with engine oil. • Heat the oil to each of the specified temperatures. Stir the oil well while doing so.
	Requirements		• 20°C {68°F} : 241.8 kΩ • 50°C {122°F} : 106.2 $^{+74.3}_{-41.8}$ kΩ • 100°C {212°F} : 33.56 $^{+17.60}_{-10.60}$ kΩ • 150°C {302°F} : 13.90 $^{+5.36}_{-3.60}$ kΩ • 200°C {392°F} : 6.896 $^{+2.064}_{-1.252}$ kΩ
	Inspection result (Is the judging standard satisfied?)	YES	Go to step 3.
		NO	Cleaning of sensor

<Step 2 inspection diagram>

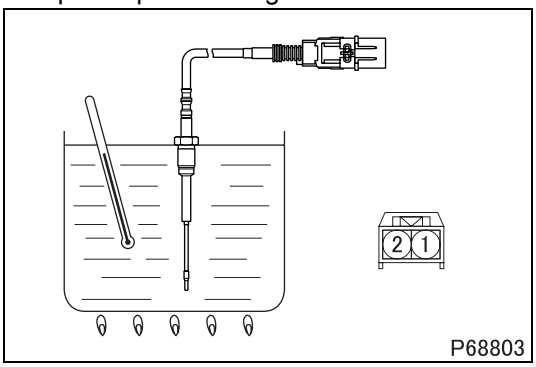

Step 3	Inspection items		Inspection of oil level
	Maintenance item		Inspection of engine oil level
	Inspection condition		Engine is stopped.
	Requirements		Oil level for inspection is not exceeded.
	Inspection result (Is the judging standard satisfied?)	YES	Go to step 4.
		NO	After replacement of oil, go to step 4.

<Step 3 inspection diagram>

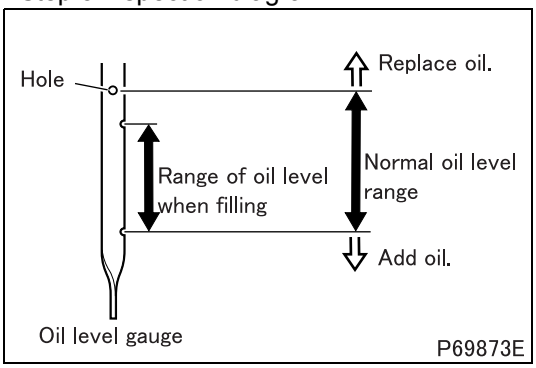

Step 4	Inspection items		Inspection of pressure hose
	Maintenance item		Check pressure hose of DPF absolute pressure sensor and DPF pressure sensor (DIFF) for connection and cracks.
	Inspection condition		–
	Requirements		Nothing abnormal detected
	Inspection result (Is the judging standard satisfied?)	YES	Go to step 5.
		NO	Correction and replacement of hose

Step 5	Inspection items		Inspection of DPF pressure sensor (DIFF) unit
	Maintenance item		Measure value of voltage between connector terminal No. 2 (+) and 1 (–).
	Inspection condition		• Apply voltage DC 5 V across terminals No. 3 (+) and 1 (–). • Gradually increase applied air pressure.
	Requirements		• 0 ± 3.5 kPa {0 ± 0.5 psi, 0 ± 0.04 kgf/cm^2}: 1 V • 100 ± 3.5 kPa {15 ± 0.5 psi, 1.02 ± 0.04 kgf/cm^2}: 4.5 V
	Inspection result (Is the judging standard satisfied?)	YES	Go to step 6.
		NO	Replacement of sensor

<Step 5 inspection diagram>

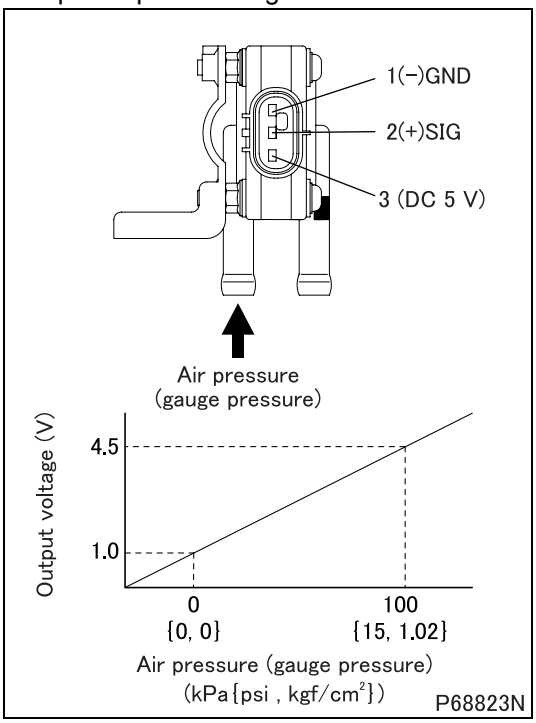

Step 6	Inspection items		Inspection of sensor unit
	Maintenance item		Since inspection of single part is not easy, whether characteristics are deteriorated or not must be checked for the sensor mounted on the current vehicle by measuring and comparing the amount of sensor intake air of the sensor currently mounted on vehicle and that replaced with new one by the service data. **(1) Prepare for inspection** • Clean or replace air cleaner element. • Prepare a new air flow sensor. • Warm up the engine fully. **(2) Measure the intake air of current sensor** • Keep pressing the accelerator pedal until it bottom the stopper bolt from the idling state. (no load maximum rotation) • Measure the following items from among “Service data”. **<General Scanning Tool used>** • Engine speed: “Ne” (rpm) • Intake air flow rate: “Air Flow Rate from MAFS” (g/s) **<Multi-Use Tester used>** • Engine speed: 01 “Engine Revolution” (rpm) • Intake air flow rate: 3A “Air Flow Sensor Output” (g/hr) **(3) Measure the intake air of new sensor** • Replace the currently mounted sensor with a new sensor. • Keep pressing the accelerator pedal until it bottom the stopper bolt from the idling state. (no load maximum rotation) • Measure intake air flow at the same rpm as that of engine revolution in item (2) of “Service data”. **(4) Comparison whether characteristics are deteriorated** • Calculate the characteristics deterioration factor (%) by the following equation. • Characteristics deterioration factor (%) = (intake air of new item – current intake air) × 100/intake air of new item.
	Inspection condition		–
	Requirements		10% or less
	Inspection result (Is the judging standard satisfied?)	YES	Go to step 7.
		NO	Replacement of sensor

Step 7	Inspection items		Inspection by control data
	Maintenance item		Perform actuator test item No. B9 “Fuel Leak Check”.
	Inspection condition		Engine start: At idle
	Requirements		There is no leak from injectors (six).
	Inspection result (Is the judging standard satisfied?)	YES	Replacement of diesel particulate filter
		NO	Replacement of injector

[Fault code]
Diagnosis code: P1414/Flash code: 92
[Monitor]
High temperature abnormality at 2nd stage of automatic diesel particulate filter regeneration
[Fault (outline)]
Improperly performed automatic regeneration of diesel particulate filter
[Diagnosis check]
- Temperature before ceramic filter is monitored by DPF temperature sensor 1 for temperature status during automatic diesel particulate filter regeneration.

NOTE
- **This diagnosis code can occur depending on conditions under which vehicle is running even if engine has no abnormality.**

[Code generation condition]
- Temperature of diesel particulate filter being automatically regenerated remains at 633°C {1171°F} or higher for 10 minutes.
  (Warning lamp is lit and diagnosis code is displayed on first establishment of code generation condition.)

[Diagnosis check timing]
- When code generation condition is established after starter switch ON

[Diagnostic requirement]
- 2 seconds passed after starter switch ON
- 2 seconds passed after cranking
- Battery voltage: normal

[Control effected by electronic control unit during fault]
- Automatic diesel particulate filter regeneration is stopped.

[Probable cause of trouble]
- Abnormality of diesel particulate filter regeneration control
- Abnormality of DPF temperature sensor 1
- Abnormality in electronic control unit
- Abnormality of common rail
- Abnormality of diesel particulate filter (front oxidation catalyst)

[Recoverability]
<Control during fault>
- Recovered after automatic regeneration after a certain time of interruption (about 10 minutes).

<Fault code>
- Automatically cleared at 40th warm up cycle after recovery of normal state.
  (To erase, execute Memory Clear.)

Warm up cycle : “Starter switch ON to start engine till starter switch OFF after coolant temperature increased and engine warmed up” constitutes 1 warm up cycle.

[Electronic Control Unit Connection Diagram]

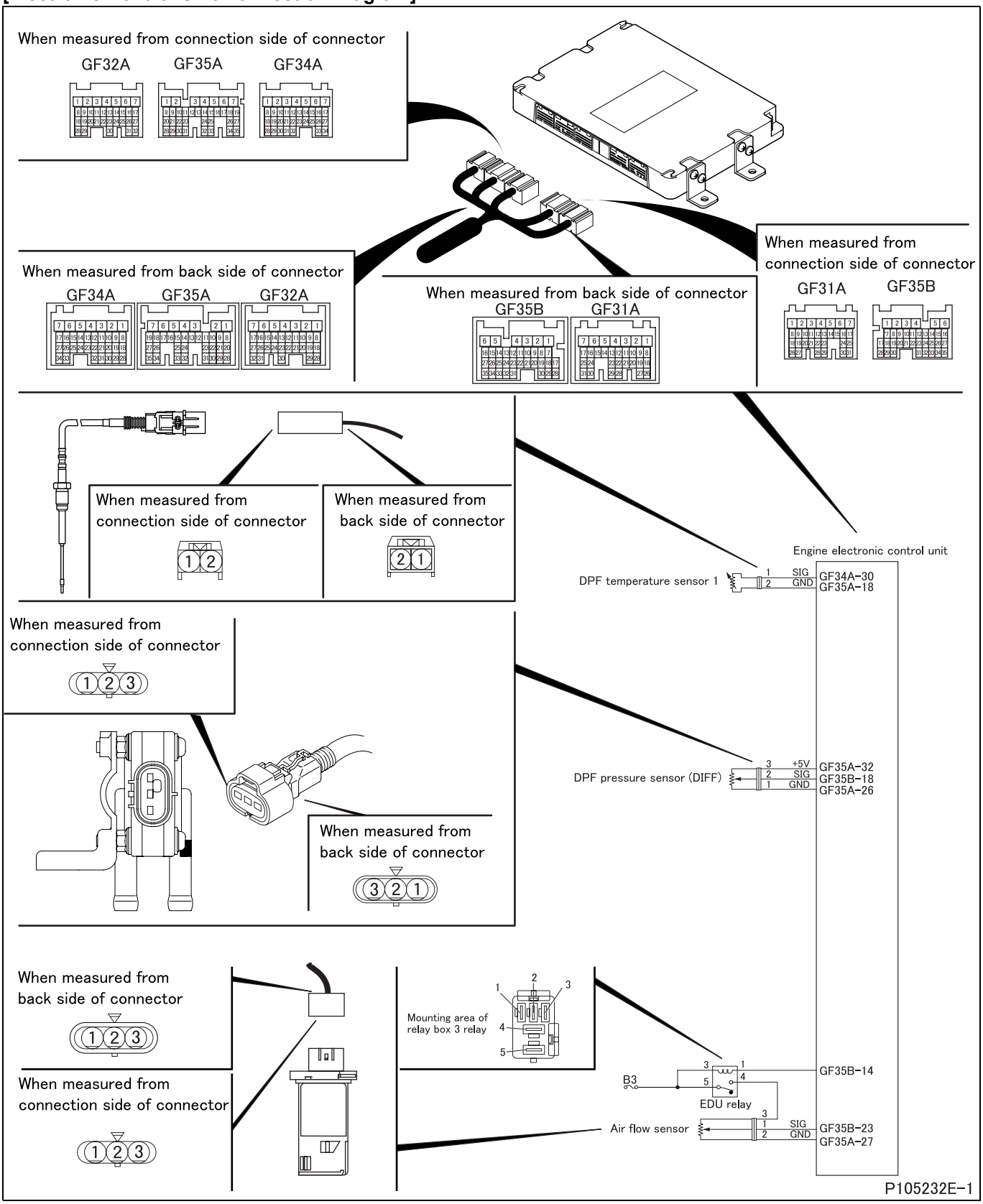

[Parts Identification and Location]

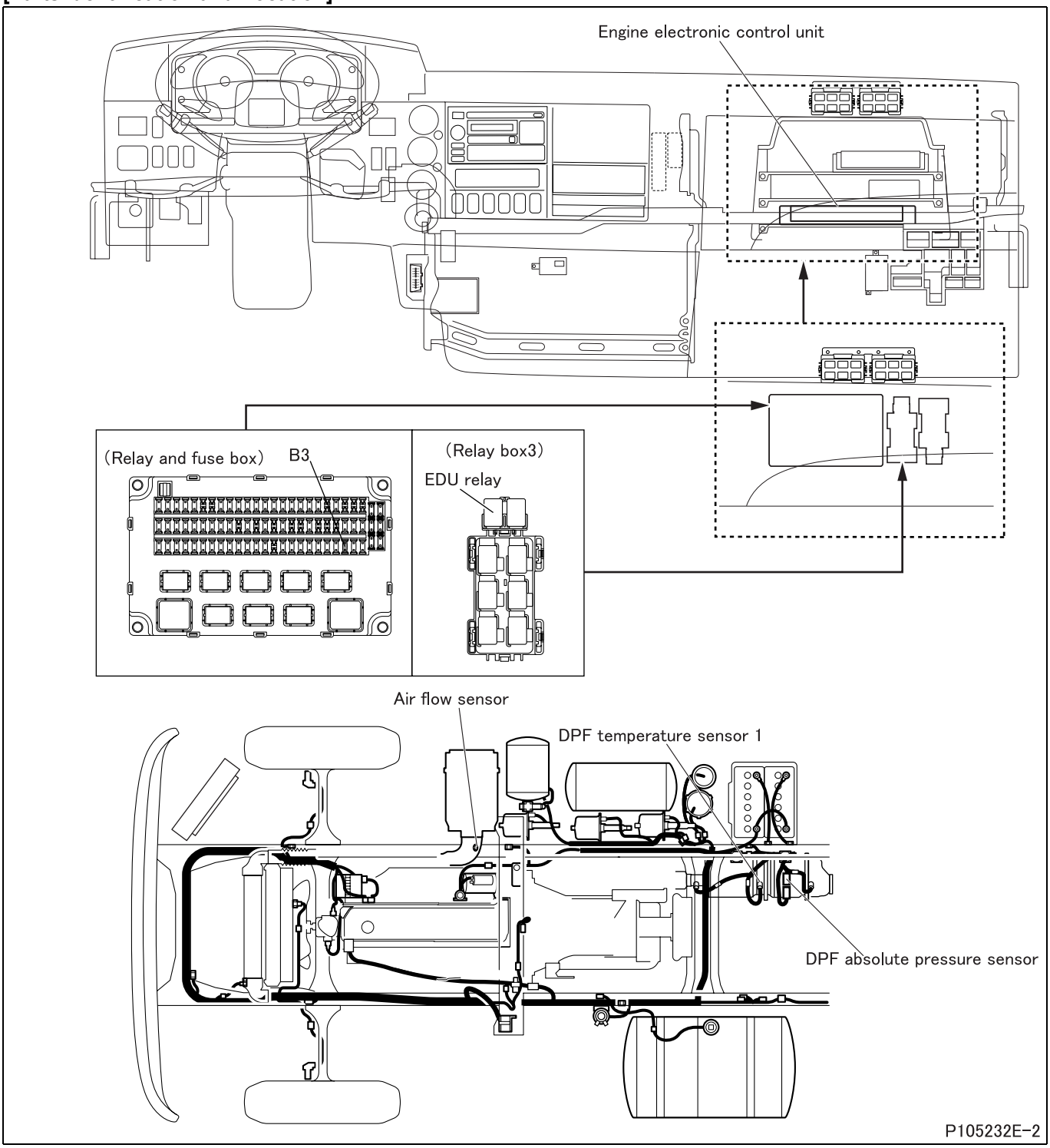

[Fault diagnosis]

- Perform checks in the sequence of the following steps.

Step 1	Inspection items		Inspection by control data
	Maintenance item		Check if following diagnosis codes occur simultaneously. • P0101 “Airflow Sensor (Plausibility)” • P0102 “Airflow Sensor (Low)” • P0103 “Airflow Sensor (High)” • P0427 “EXH Gas Temp SNSR1 (Low)” • P0428 “EXH Gas Temp SNSR1 (High)” • P0545 “DPF Temp SNSR (upstream) Low” • P0546 “DPF Temp SNSR (upstream) High” • P1660 “DPF Lamp Control Circuit (Low)” • P1661 “DPF Lamp Control Circuit (High)” • P2032 “Exhaust Gas Temp (Low)” • P2033 “Exhaust Gas Temp (High)” • P2453 “DPF Diff SNSR (Plausi) & MFF” • P2454 “DPF Diff SNSR (Low) & MFF” • P2455 “DPF Diff SNSR (High) & MFF”
	Inspection condition		Ensure that each sensor mounting condition is free of abnormalities.
	Requirements		Codes occur.
	Inspection result (Is the judging standard satisfied?)	YES	After inspection of diagnosis code that is occurring, go to step 2.
		NO	Go to step 2.

Step 2	Inspection items		Inspection of DPF temperature sensor 1 unit
	Maintenance item		Measure value of resistance between terminal No. 1 and 2.
	Inspection condition		• Put DPF temperature sensor 1 in vessel filled with engine oil. • Heat the oil to each of the specified temperatures. Stir the oil well while doing so.
	Requirements		• 20°C {68°F} : 241.8 kΩ • 50°C {122°F} : 106.2 $^{+74.3}_{-41.8}$ kΩ • 100°C {212°F} : 33.56 $^{+17.60}_{-10.60}$ kΩ • 150°C {302°F} : 13.90 $^{+5.36}_{-3.60}$ kΩ • 200°C {392°F} : 6.896 $^{+2.064}_{-1.252}$ kΩ
	Inspection result (Is the judging standard satisfied?)	YES	Go to step 3.
		NO	Cleaning of sensor

<Step 2 inspection diagram>

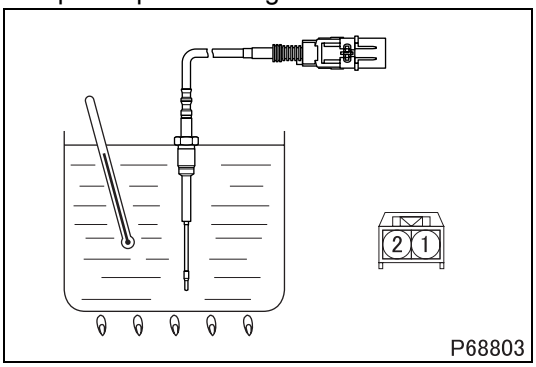

Step 3	Inspection items		Inspection of oil level
	Maintenance item		Inspection of engine oil level
	Inspection condition		Engine is stopped.
	Requirements		Oil level for inspection is not exceeded.
	Inspection result (Is the judging standard satisfied?)	YES	Go to step 4.
		NO	After replacement of oil, go to step 4.

<Step 3 inspection diagram>

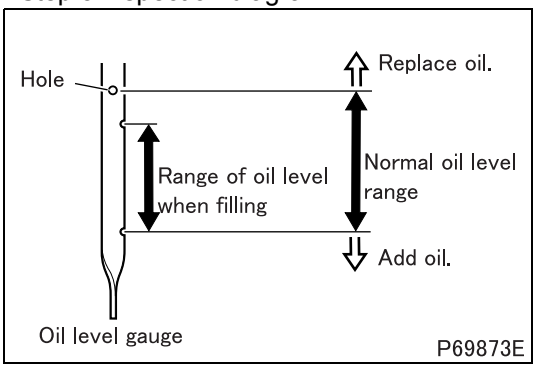

Step 4	Inspection items		Inspection of pressure hose
	Maintenance item		Check pressure hose of DPF absolute pressure sensor and DPF pressure sensor (DIFF) for connection and cracks.
	Inspection condition		–
	Requirements		Nothing abnormal detected
	Inspection result (Is the judging standard satisfied?)	YES	Go to step 5.
		NO	Correction and replacement of hose

Step 5	Inspection items		Inspection of DPF pressure sensor (DIFF) unit
	Maintenance item		Measure value of voltage between connector terminal No. 2 (+) and 1 (–).
	Inspection condition		• Apply voltage DC 5 V across terminals No. 3 (+) and 1 (–). • Gradually increase applied air pressure.
	Requirements		• 0 ± 3.5 kPa {0 ± 0.5 psi, 0 ± 0.04 kgf/cm^2}: 1 V • 100 ± 3.5 kPa {15 ± 0.5 psi, 1.02 ± 0.04 kgf/cm^2}: 4.5 V
	Inspection result (Is the judging standard satisfied?)	YES	Go to step 6.
		NO	Replacement of sensor

<Step 5 inspection diagram>

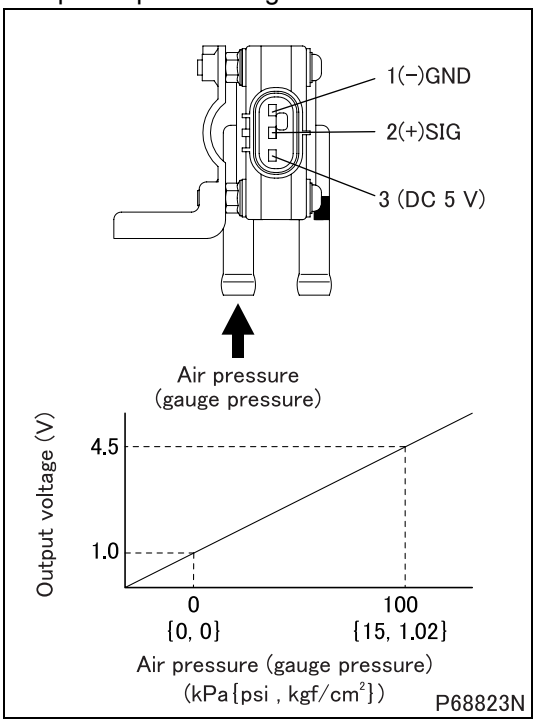

Step 6	Inspection items		Inspection of sensor unit
	Maintenance item		Since inspection of single part is not easy, whether characteristics are deteriorated or not must be checked for the sensor mounted on the current vehicle by measuring and comparing the amount of sensor intake air of the sensor currently mounted on vehicle and that replaced with new one by the service data. **(1) Prepare for inspection** • Clean or replace air cleaner element. • Prepare a new air flow sensor. • Warm up the engine fully. **(2) Measure the intake air of current sensor** • Keep pressing the accelerator pedal until it bottom the stopper bolt from the idling state. (no load maximum rotation) • Measure the following items from among “Service data”. **<General Scanning Tool used>** • Engine speed: “Ne” (rpm) • Intake air flow rate: “Air Flow Rate from MAFS” (g/s) **<Multi-Use Tester used>** • Engine speed: 01 “Engine Revolution” (rpm) • Intake air flow rate: 3A “Air Flow Sensor Output” (g/hr) **(3) Measure the intake air of new sensor** • Replace the currently mounted sensor with a new sensor. • Keep pressing the accelerator pedal until it bottom the stopper bolt from the idling state. (no load maximum rotation) • Measure intake air flow at the same rpm as that of engine revolution in item (2) of “Service data”. **(4) Comparison whether characteristics are deteriorated** • Calculate the characteristics deterioration factor (%) by the following equation. • Characteristics deterioration factor (%) = (intake air of new item – current intake air) × 100/intake air of new item.
	Inspection condition		–
	Requirements		10% or less
	Inspection result (Is the judging standard satisfied?)	YES	Go to step 7.
		NO	Replacement of sensor

Step 7	Inspection items		Inspection by control data
	Maintenance item		Perform actuator test item No. B9 “Fuel Leak Check”.
	Inspection condition		Engine start: At idle
	Requirements		There is no leak from injectors (six).
	Inspection result (Is the judging standard satisfied?)	YES	Replacement of diesel particulate filter
		NO	Replacement of injector

[Fault code]
Diagnosis code: P1415/Flash code: 92
[Monitor]
Long lasting abnormality of automatic diesel particulate filter regeneration
[Fault (outline)]
Improperly performed automatic regeneration of diesel particulate filter
[Diagnosis check]
- Duration of automatic diesel particulate filter regeneration is monitored.

[Code generation condition]
- Automatic diesel particulate filter regeneration is not terminated even after 90 minutes.
  (Warning lamp is lit and diagnosis code is displayed on first establishment of code generation condition.)

[Diagnosis check timing]
- When code generation condition is established after starter switch ON

[Diagnostic requirement]
- 2 seconds passed after starter switch ON
- 2 seconds passed after cranking
- Battery voltage: normal

[Control effected by electronic control unit during fault]
- Automatic diesel particulate filter regeneration is stopped.

[Probable cause of trouble]
- Abnormality of diesel particulate filter regeneration control
- Abnormality of DPF temperature sensor 1
- Abnormality in electronic control unit
- Abnormality of common rail
- Abnormality of diesel particulate filter (front oxidation catalyst)

[Recoverability]
<Control during fault>
- Recovered after automatic regeneration after a certain time of interruption (about 10 minutes).

<Fault code>
- Automatically cleared at 40th warm up cycle after recovery of normal state.
  (To erase, execute Memory Clear.)

Warm up cycle : “Starter switch ON to start engine till starter switch OFF after coolant temperature increased and engine warmed up” constitutes 1 warm up cycle.

[Electronic Control Unit Connection Diagram]

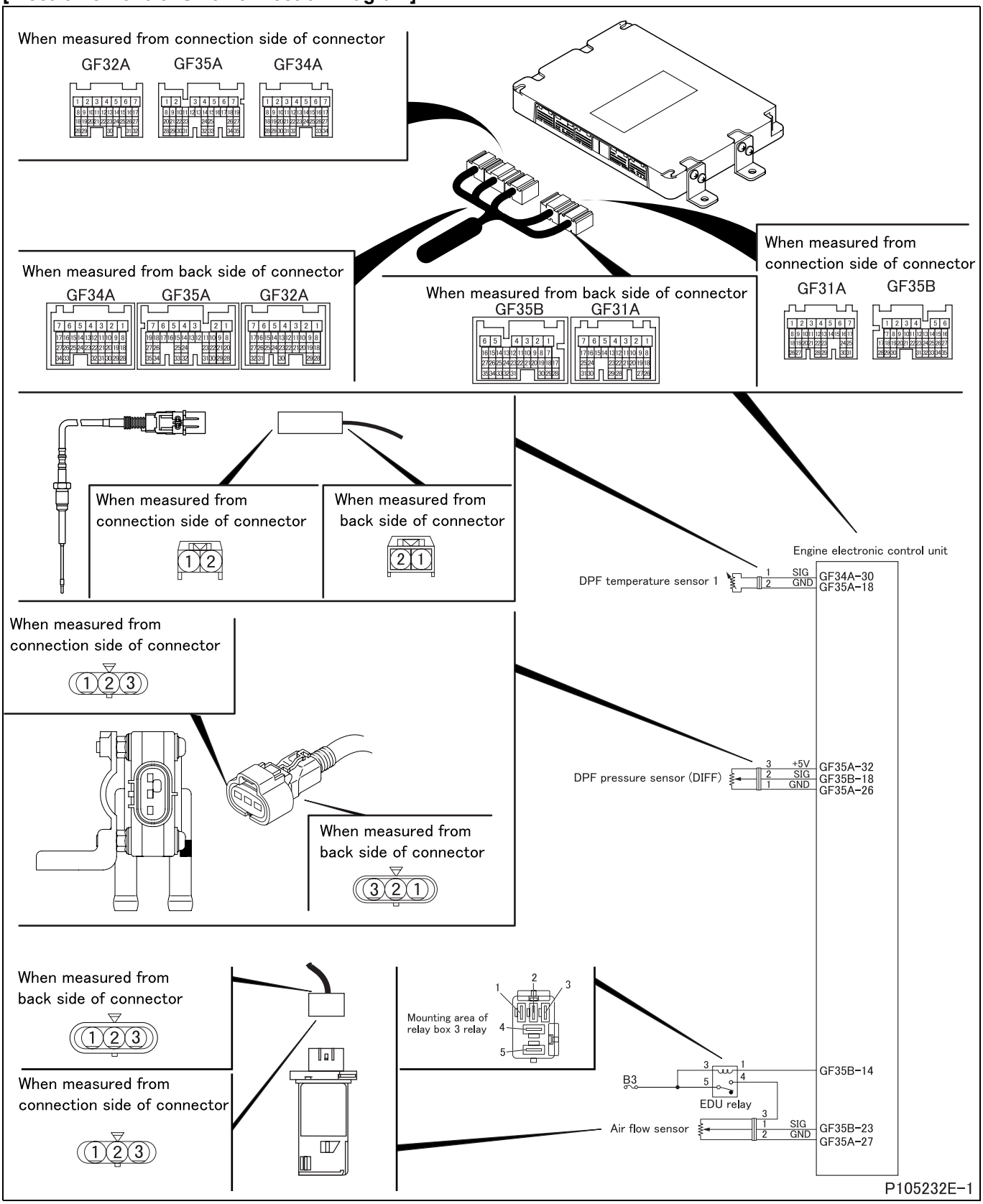

[Parts Identification and Location]

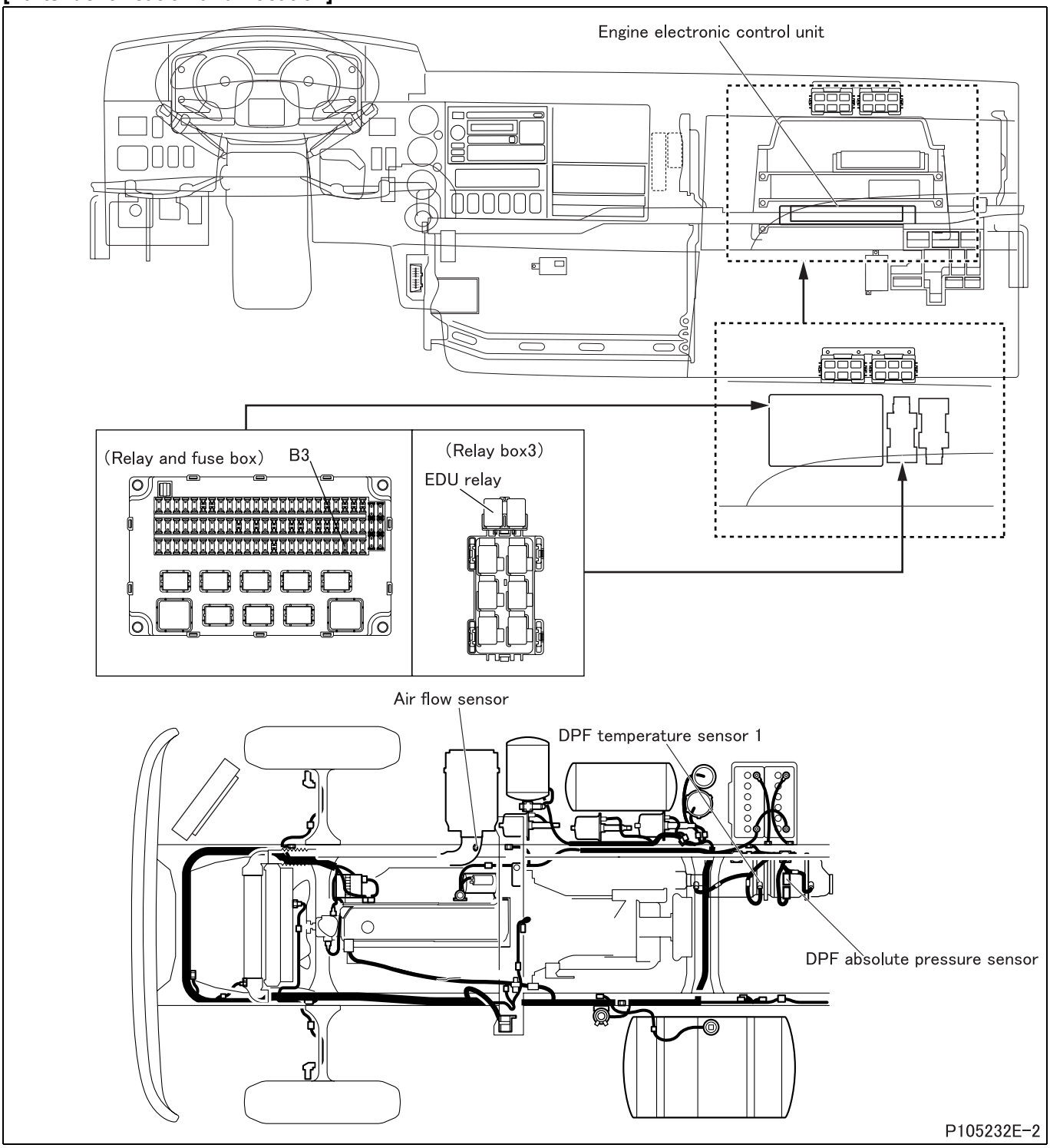

[Fault diagnosis]

- Perform checks in the sequence of the following steps.

Step 1	Inspection items		Inspection by control data
	Maintenance item		Check if following diagnosis codes occur simultaneously. • P0101 “Airflow Sensor (Plausibility)” • P0102 “Airflow Sensor (Low)” • P0103 “Airflow Sensor (High)” • P0427 “EXH Gas Temp SNSR1 (Low)” • P0428 “EXH Gas Temp SNSR1 (High)” • P0545 “DPF Temp SNSR (upstream) Low” • P0546 “DPF Temp SNSR (upstream) High” • P1660 “DPF Lamp Control Circuit (Low)” • P1661 “DPF Lamp Control Circuit (High)” • P2032 “Exhaust Gas Temp (Low)” • P2033 “Exhaust Gas Temp (High)” • P2453 “DPF Diff SNSR (Plausi) & MFF” • P2454 “DPF Diff SNSR (Low) & MFF” • P2455 “DPF Diff SNSR (High) & MFF”
	Inspection condition		Ensure that each sensor mounting condition is free of abnormalities.
	Requirements		Codes occur.
	Inspection result (Is the judging standard satisfied?)	YES	After inspection of diagnosis code that is occurring, go to step 2.
		NO	Go to step 2.

Step 2	Inspection items		Inspection of DPF temperature sensor 1 unit
	Maintenance item		Measure value of resistance between terminal No. 1 and 2.
	Inspection condition		• Put DPF temperature sensor 1 in vessel filled with engine oil. • Heat the oil to each of the specified temperatures. Stir the oil well while doing so.
	Requirements		• 20°C {68°F} : 241.8 kΩ • 50°C {122°F} : 106.2 $^{+74.3}_{-41.8}$ kΩ • 100°C {212°F} : 33.56 $^{+17.60}_{-10.60}$ kΩ • 150°C {302°F} : 13.90 $^{+5.36}_{-3.60}$ kΩ • 200°C {392°F} : 6.896 $^{+2.064}_{-1.252}$ kΩ
	Inspection result (Is the judging standard satisfied?)	YES	Go to step 3.
		NO	Cleaning of sensor

<Step 2 inspection diagram>

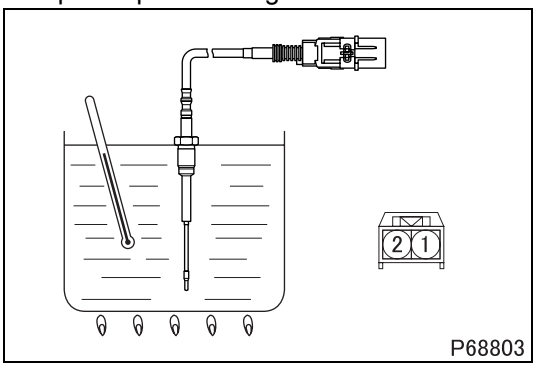

Step 3	Inspection items		Inspection of oil level
	Maintenance item		Inspection of engine oil level
	Inspection condition		Engine is stopped.
	Requirements		Oil level for inspection is not exceeded.
	Inspection result (Is the judging standard satisfied?)	YES	Go to step 4.
		NO	After replacement of oil, go to step 4.

<Step 3 inspection diagram>

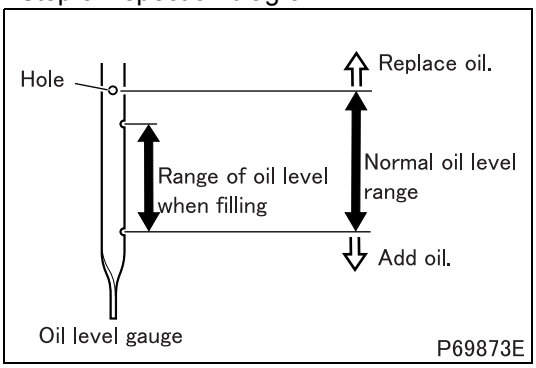

Step 4	Inspection items		Inspection of pressure hose
	Maintenance item		Check pressure hose of DPF absolute pressure sensor and DPF pressure sensor (DIFF) for connection and cracks.
	Inspection condition		–
	Requirements		Nothing abnormal detected
	Inspection result (Is the judging standard satisfied?)	YES	Go to step 5.
		NO	Correction and replacement of hose

Step 5	Inspection items		Inspection of DPF pressure sensor (DIFF) unit
	Maintenance item		Measure value of voltage between connector terminal No. 2 (+) and 1 (–).
	Inspection condition		• Apply voltage DC 5 V across terminals No. 3 (+) and 1 (–). • Gradually increase applied air pressure.
	Requirements		• 0 ± 3.5 kPa {0 ± 0.5 psi, 0 ± 0.04 kgf/cm^2}: 1 V • 100 ± 3.5 kPa {15 ± 0.5 psi, 1.02 ± 0.04 kgf/cm^2}: 4.5 V
	Inspection result (Is the judging standard satisfied?)	YES	Go to step 6.
		NO	Replacement of sensor

<Step 5 inspection diagram>

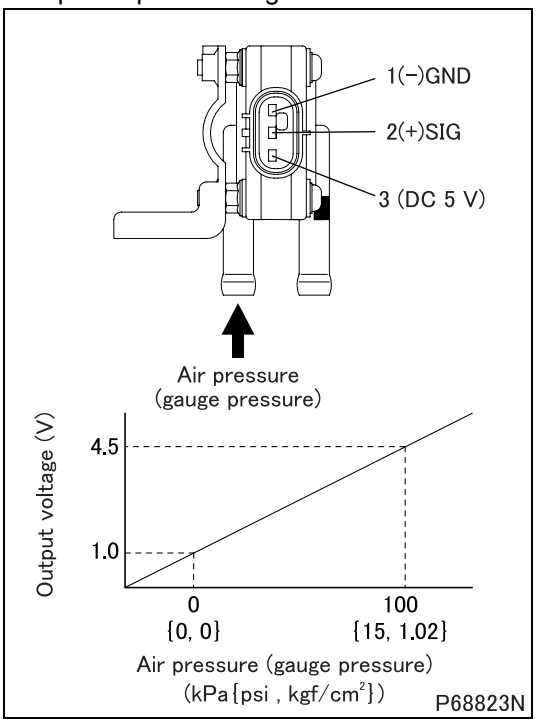

Step 6	Inspection items		Inspection of sensor unit
	Maintenance item		Since inspection of single part is not easy, whether characteristics are deteriorated or not must be checked for the sensor mounted on the current vehicle by measuring and comparing the amount of sensor intake air of the sensor currently mounted on vehicle and that replaced with new one by the service data. **(1) Prepare for inspection** • Clean or replace air cleaner element. • Prepare a new air flow sensor. • Warm up the engine fully. **(2) Measure the intake air of current sensor** • Keep pressing the accelerator pedal until it bottom the stopper bolt from the idling state. (no load maximum rotation) • Measure the following items from among “Service data”. **<General Scanning Tool used>** • Engine speed: “Ne” (rpm) • Intake air flow rate: “Air Flow Rate from MAFS” (g/s) **<Multi-Use Tester used>** • Engine speed: 01 “Engine Revolution” (rpm) • Intake air flow rate: 3A “Air Flow Sensor Output” (g/hr) **(3) Measure the intake air of new sensor** • Replace the currently mounted sensor with a new sensor. • Keep pressing the accelerator pedal until it bottom the stopper bolt from the idling state. (no load maximum rotation) • Measure intake air flow at the same rpm as that of engine revolution in item (2) of “Service data”. **(4) Comparison whether characteristics are deteriorated** • Calculate the characteristics deterioration factor (%) by the following equation. • Characteristics deterioration factor (%) = (intake air of new item – current intake air) × 100/intake air of new item.
	Inspection condition		–
	Requirements		10% or less
	Inspection result (Is the judging standard satisfied?)	YES	Go to step 7.
		NO	Replacement of sensor

Step 7	Inspection items		Inspection by control data
	Maintenance item		Perform actuator test item No. B9 “Fuel Leak Check”.
	Inspection condition		Engine start: At idle
	Requirements		There is no leak from injectors (six).
	Inspection result (Is the judging standard satisfied?)	YES	Replacement of diesel particulate filter
		NO	Replacement of injector

[Fault code]
Diagnosis code: P1416/Flash code: 92
[Monitor]
Long lasting abnormality at 1st stage of manual diesel particulate filter regeneration
[Fault (outline)]
Plausibility
[Diagnosis check]
- Temperature before front oxidation catalyst and ceramic filter is monitored by DPF temperature sensor 1 for temperature status during manual diesel particulate filter regeneration.

[Code generation condition]
- Temperature of diesel particulate filter being manually regenerated remains at 250°C {482°F} or lower for 10 minutes.
  (Warning lamp is lit and diagnosis code is displayed on first establishment of code generation condition.)

[Diagnosis check timing]
- When code generation condition is established after starter switch ON

[Diagnostic requirement]
- 2 seconds passed after starter switch ON
- 2 seconds passed after cranking
- Battery voltage: normal

[Control effected by electronic control unit during fault]
- Injection quantity is limited.
- Exhaust gas recirculation control is stopped.
- Throttle control is stopped.
- Diesel particulate filter regeneration is stopped.

[Probable cause of trouble]
- Abnormality of diesel particulate filter regeneration control
- Abnormality of DPF temperature sensor 1
- Abnormality in electronic control unit
- Abnormality of common rail
- Abnormality of diesel particulate filter (front oxidation catalyst)

[Recoverability]
<Control during fault>
- Recovered if signal becomes normal when starter switch is turned OFF to ON (power supply resumed to electronic control unit).

NOTE
- **Recovery from a fault of this code requires “Resetting the DPF-related information”; troubleshooting steps on the following pages, therefore, must be completely performed.**

<Warning lamp>
- Extinguished after input of normal signal.

<Fault code>
- If code recovered to normal, automatically cleared at 40th warm up cycle after warning lamp is lit.
  (To clear as desired, erase from the memory.)

Warm up cycle : “Starter switch ON to start engine till starter switch OFF after coolant temperature increased and engine warmed up” constitutes 1 warm up cycle.

[Electronic Control Unit Connection Diagram]

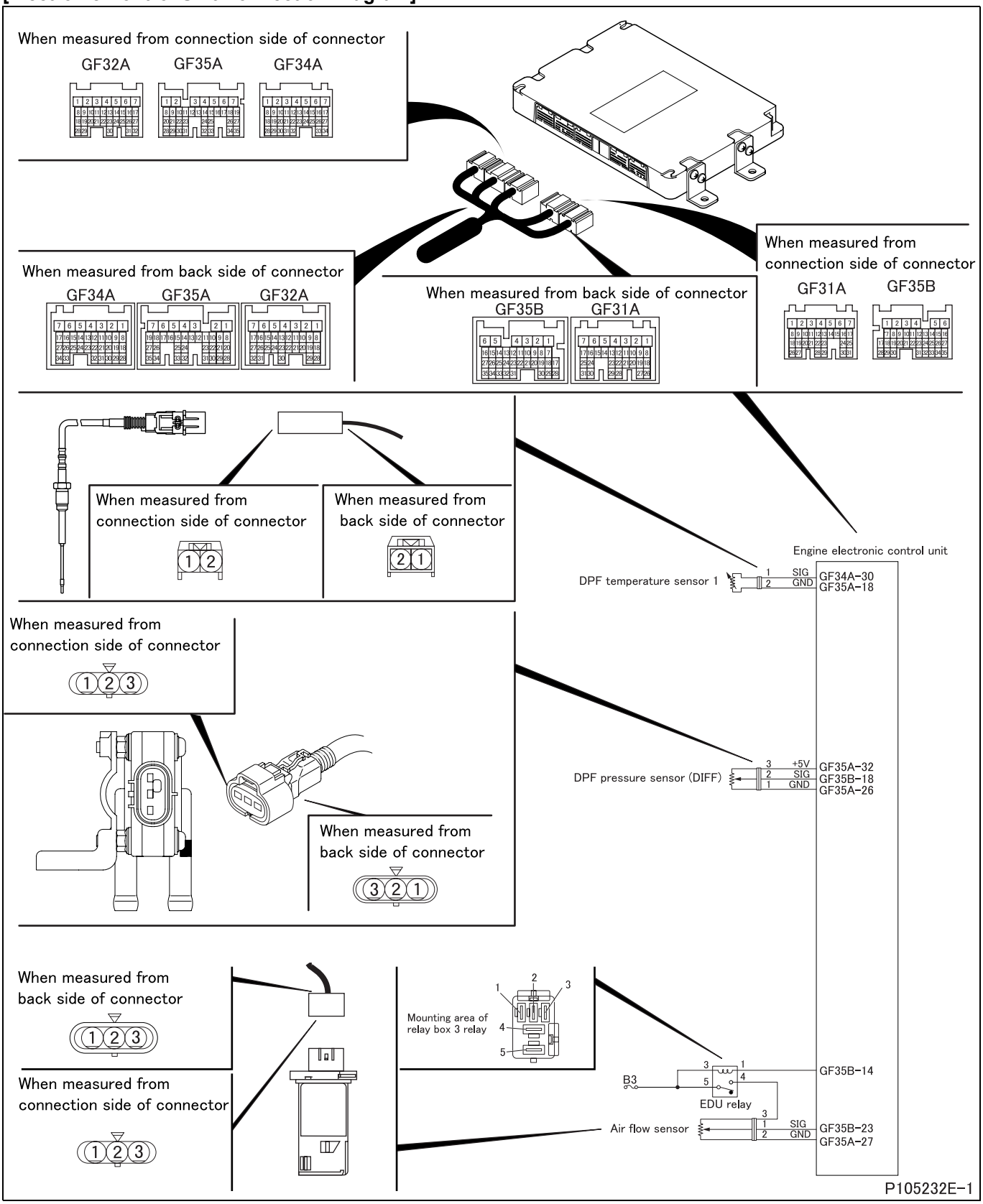

[Parts Identification and Location]

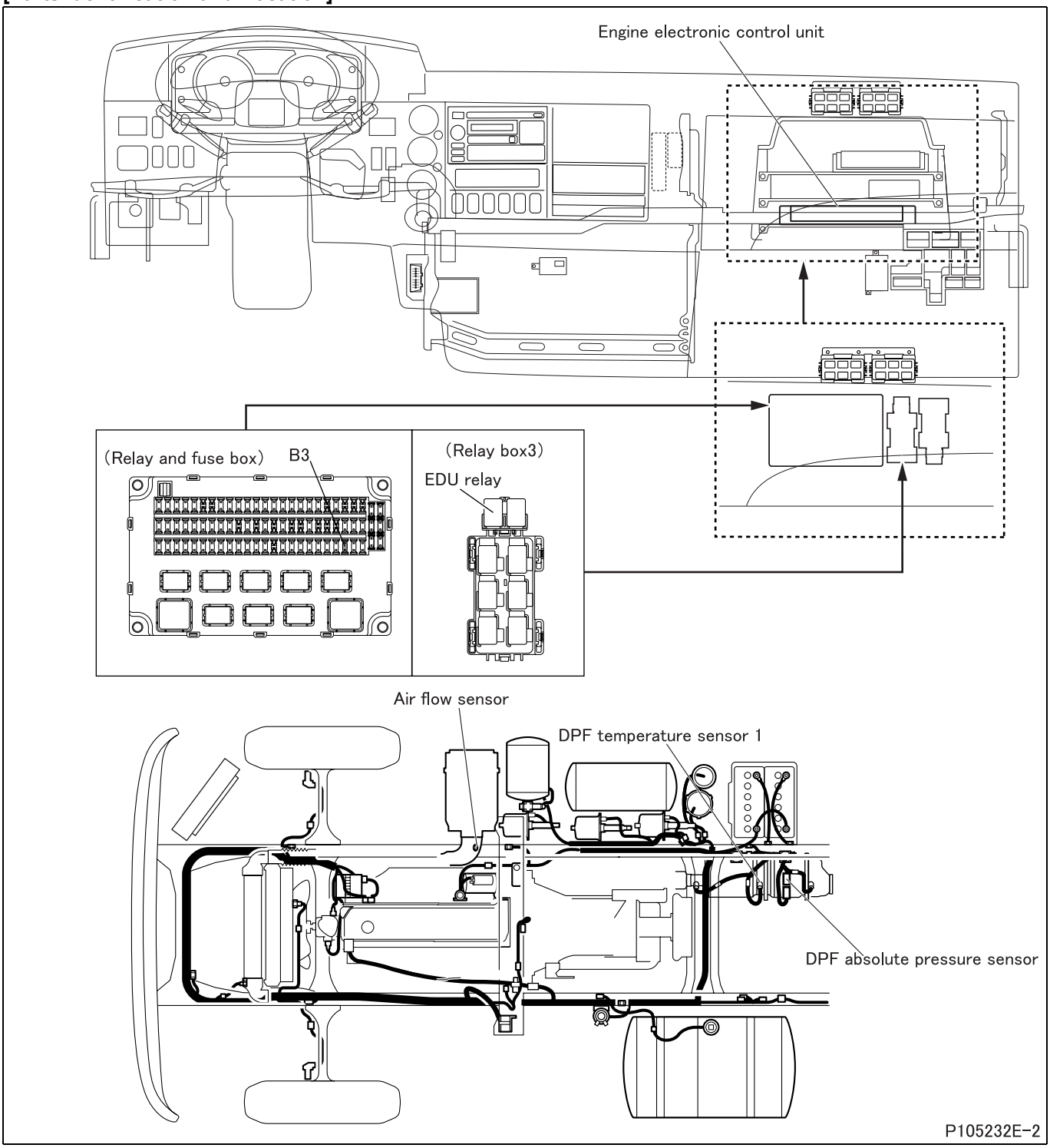

[Fault diagnosis]

- Perform checks in the sequence of the following steps.

Step 1	Inspection items		Inspection by control data
	Maintenance item		Check if following diagnosis codes occur simultaneously. • P0101 “Airflow Sensor (Plausibility)” • P0102 “Airflow Sensor (Low)” • P0103 “Airflow Sensor (High)” • P0427 “EXH Gas Temp SNSR1 (Low)” • P0428 “EXH Gas Temp SNSR1 (High)” • P0545 “DPF Temp SNSR (upstream) Low” • P0546 “DPF Temp SNSR (upstream) High” • P1660 “DPF Lamp Control Circuit (Low)” • P1661 “DPF Lamp Control Circuit (High)” • P2032 “Exhaust Gas Temp (Low)” • P2033 “Exhaust Gas Temp (High)” • P2453 “DPF Diff SNSR (Plausi) & MFF” • P2454 “DPF Diff SNSR (Low) & MFF” • P2455 “DPF Diff SNSR (High) & MFF”
	Inspection condition		Ensure that each sensor mounting condition is free of abnormalities.
	Requirements		Codes occur.
	Inspection result (Is the judging standard satisfied?)	YES	After inspection of diagnosis code that is occurring, go to step 2.
		NO	Go to step 2.

Step 2	Inspection items		Inspection of DPF temperature sensor 1 unit
	Maintenance item		Measure value of resistance between terminal No. 1 and 2.
	Inspection condition		• Put DPF temperature sensor 1 in vessel filled with engine oil. • Heat the oil to each of the specified temperatures. Stir the oil well while doing so.
	Requirements		• 20°C {68°F} : 241.8 kΩ • 50°C {122°F} : 106.2 $^{+74.3}_{-41.8}$ kΩ • 100°C {212°F} : 33.56 $^{+17.60}_{-10.60}$ kΩ • 150°C {302°F} : 13.90 $^{+5.36}_{-3.60}$ kΩ • 200°C {392°F} : 6.896 $^{+2.064}_{-1.252}$ kΩ
	Inspection result (Is the judging standard satisfied?)	YES	Go to step 3.
		NO	After cleaning of sensor, go to step 3.

<Step 2 inspection diagram>

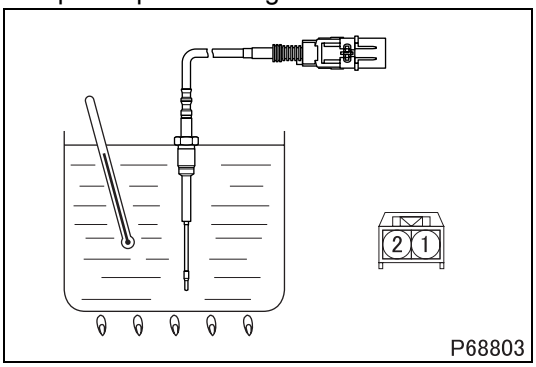

Step 3	Inspection items		Inspection of oil level
	Maintenance item		Inspection of engine oil level
	Inspection condition		Engine is stopped.
	Requirements		Oil level for inspection is not exceeded.
	Inspection result (Is the judging standard satisfied?)	YES	Go to step 4.
		NO	After replacement of oil, go to step 4.

<Step 3 inspection diagram>

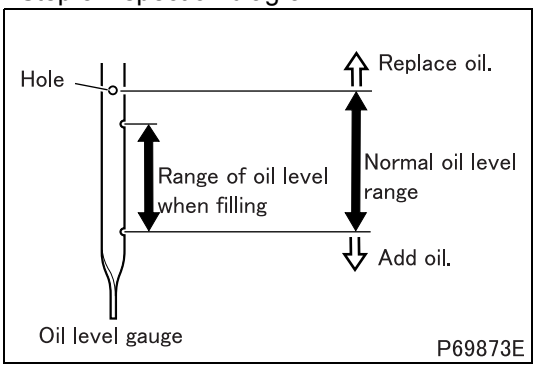

Step 4	Inspection items		Inspection of pressure hose
	Maintenance item		Check pressure hose of DPF absolute pressure sensor and DPF pressure sensor (DIFF) for connection and cracks.
	Inspection condition		–
	Requirements		Nothing abnormal detected
	Inspection result (Is the judging standard satisfied?)	YES	Go to step 5.
		NO	After correction and replacement of hose, go to step 5.

Step 5	Inspection items		Unit inspection of diesel particulate filter
	Maintenance item		Check the exhaust passage inside the diesel particulate filter for adhesion of soot in large quantity.
	Inspection condition		Remove diesel particulate filter.
	Requirements		No soot is deposited.
	Inspection result (Is the judging standard satisfied?)	YES	Go to step 6.
		NO	After replacement of ceramic filter, perform resetting the DPF-related information. (See Gr15.)

<Step 5 inspection diagram>

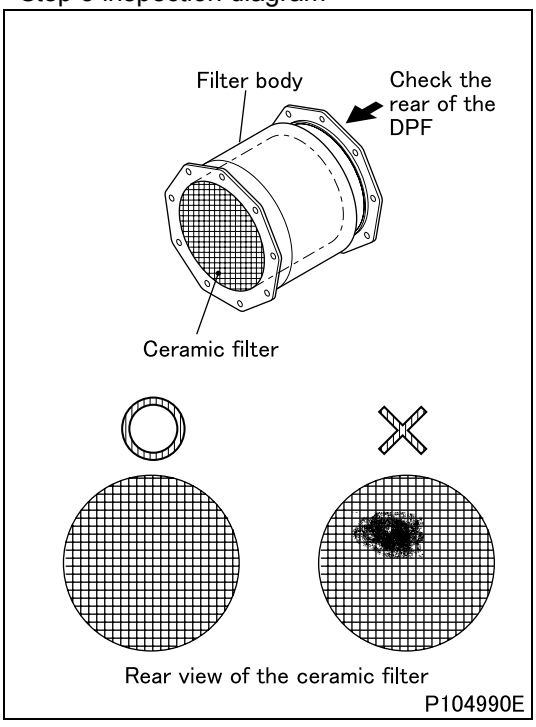

Step 6	Inspection items		Diesel Particulate Filter Unit Inspection for Clogging and Cleaning the Diesel Particulate Filter Unit
	Maintenance item		See Gr15 “Diesel Particulate Filter Unit Inspection for Clogging and Cleaning the Diesel Particulate Filter Unit”
	Inspection condition		Perform the following preparatory works. • Place the transmission in neutral (place the automatic transmission in P range). • Turn the steering wheel in neutral position and securely apply the parking brake. • Turn off air conditioner not to increase the engine speed. • Check diagnosis code of each electronic control system. If any fault exists, rectify it. • Resetting the DPF-related information (perform “History reset” of Multi-Use Tester) (See Gr15 “Resetting the DPF-related Information”.) • Warm up the engine until the engine coolant has been heated to more than 70°C {158°F} (verify from Service Data “Engine Coolant Temperature” or “35: Water Temperature”).
	Requirements		This diagnosis code does not occur again.
	Inspection result (Is the judging standard satisfied?)	YES	Go to step 7.
		NO	Replacement of electronic control unit

Step 7	Inspection items		Inspection of DPF pressure sensor (DIFF) unit
	Maintenance item		Measure value of voltage between connector terminal No. 2 (+) and 1 (–).
	Inspection condition		• Apply voltage DC 5 V across terminals No. 3 (+) and 1 (–). • Gradually increase applied air pressure.
	Requirements		• 0 ± 3.5 kPa {0 ± 0.5 psi, 0 ± 0.04 kgf/cm^2}: 1 V • 100 ± 3.5 kPa {15 ± 0.5 psi, 1.02 ± 0.04 kgf/cm^2}: 4.5 V
	Inspection result (Is the judging standard satisfied?)	YES	Go to step 8.
		NO	Replacement of sensor

<Step 7 inspection diagram>

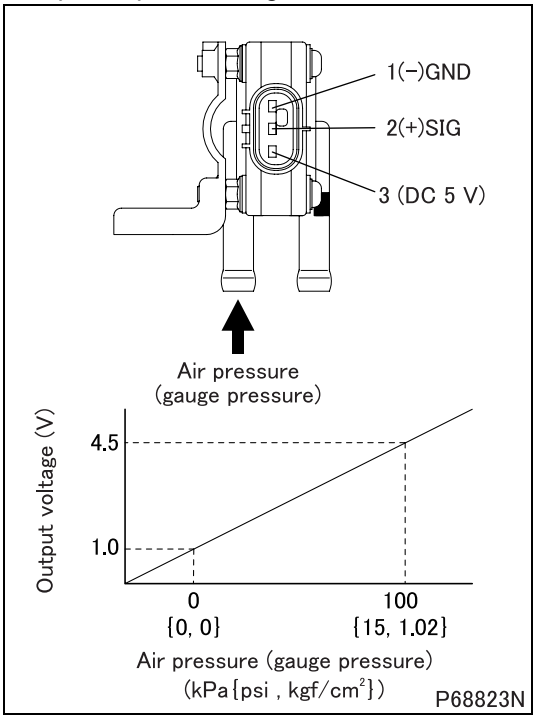

Step 8	Inspection items		Inspection of sensor unit
	Maintenance item		Since inspection of single part is not easy, whether characteristics are deteriorated or not must be checked for the sensor mounted on the current vehicle by measuring and comparing the amount of sensor intake air of the sensor currently mounted on vehicle and that replaced with new one by the service data. **(1) Prepare for inspection** • Clean or replace air cleaner element. • Prepare a new air flow sensor. • Warm up the engine fully. **(2) Measure the intake air of current sensor** • Keep pressing the accelerator pedal until it bottom the stopper bolt from the idling state. (no load maximum rotation) • Measure the following items from among “Service data”. **<General Scanning Tool used>** • Engine speed: “Ne” (rpm) • Intake air flow rate: “Air Flow Rate from MAFS” (g/s) **<Multi-Use Tester used>** • Engine speed: 01 “Engine Revolution” (rpm) • Intake air flow rate: 3A “Air Flow Sensor Output” (g/hr) **(3) Measure the intake air of new sensor** • Replace the currently mounted sensor with a new sensor. • Keep pressing the accelerator pedal until it bottom the stopper bolt from the idling state. (no load maximum rotation) • Measure intake air flow at the same rpm as that of engine revolution in item (2) of “Service data”. **(4) Comparison whether characteristics are deteriorated** • Calculate the characteristics deterioration factor (%) by the following equation. • Characteristics deterioration factor (%) = (intake air of new item – current intake air) × 100/intake air of new item.
	Inspection condition		–
	Requirements		10% or less
	Inspection result (Is the judging standard satisfied?)	YES	Go to step 9.
		NO	Replacement of sensor

Step 9	Inspection items		Inspection by control data
	Maintenance item		Perform actuator test item No. B9 “Fuel Leak Check”.
	Inspection condition		Engine start: At idle
	Requirements		There is no leak from injectors (six).
	Inspection result (Is the judging standard satisfied?)	YES	Replacement of diesel particulate filter
		NO	Replacement of injector

[Fault code]
Diagnosis code: P1417/Flash code: 92
[Monitor]
Low temperature abnormality at 2nd stage of manual diesel particulate filter regeneration
[Fault (outline)]
Plausibility
[Diagnosis check]
- Temperature before front oxidation catalyst and ceramic filter is monitored by DPF temperature sensor 1 for temperature status during manual diesel particulate filter regeneration.

[Code generation condition]
- Exhaust gas temperature remains below specified level for approx. 0.2 second.
  (Warning lamp is lit and diagnosis code is displayed on first establishment of code generation condition.)

[Diagnosis check timing]
- When code generation condition is established after starter switch ON

[Diagnostic requirement]
- 2 seconds passed after starter switch ON
- 2 seconds passed after cranking
- Battery voltage: normal

[Control effected by electronic control unit during fault]
- Injection quantity is limited.
- Exhaust gas recirculation control is stopped.
- Throttle control is stopped.
- Diesel particulate filter regeneration is stopped.

[Probable cause of trouble]
- Abnormality of diesel particulate filter regeneration control
- Abnormality of DPF temperature sensor 1
- Abnormality in electronic control unit
- Abnormality of common rail
- Abnormality of diesel particulate filter (front oxidation catalyst)

[Recoverability]
<Control during fault>
- Recovered if signal becomes normal when starter switch is turned OFF to ON (power supply resumed to electronic control unit).

NOTE
- **Recovery from a fault of this code requires “Resetting the DPF-related information”; troubleshooting steps on the following pages, therefore, must be completely performed.**

<Warning lamp>
- Extinguished after input of normal signal.

<Fault code>
- If code recovered to normal, automatically cleared at 40th warm up cycle after warning lamp is lit.
  (To clear as desired, erase from the memory.)

Warm up cycle : “Starter switch ON to start engine till starter switch OFF after coolant temperature increased and engine warmed up” constitutes 1 warm up cycle.

[Electronic Control Unit Connection Diagram]

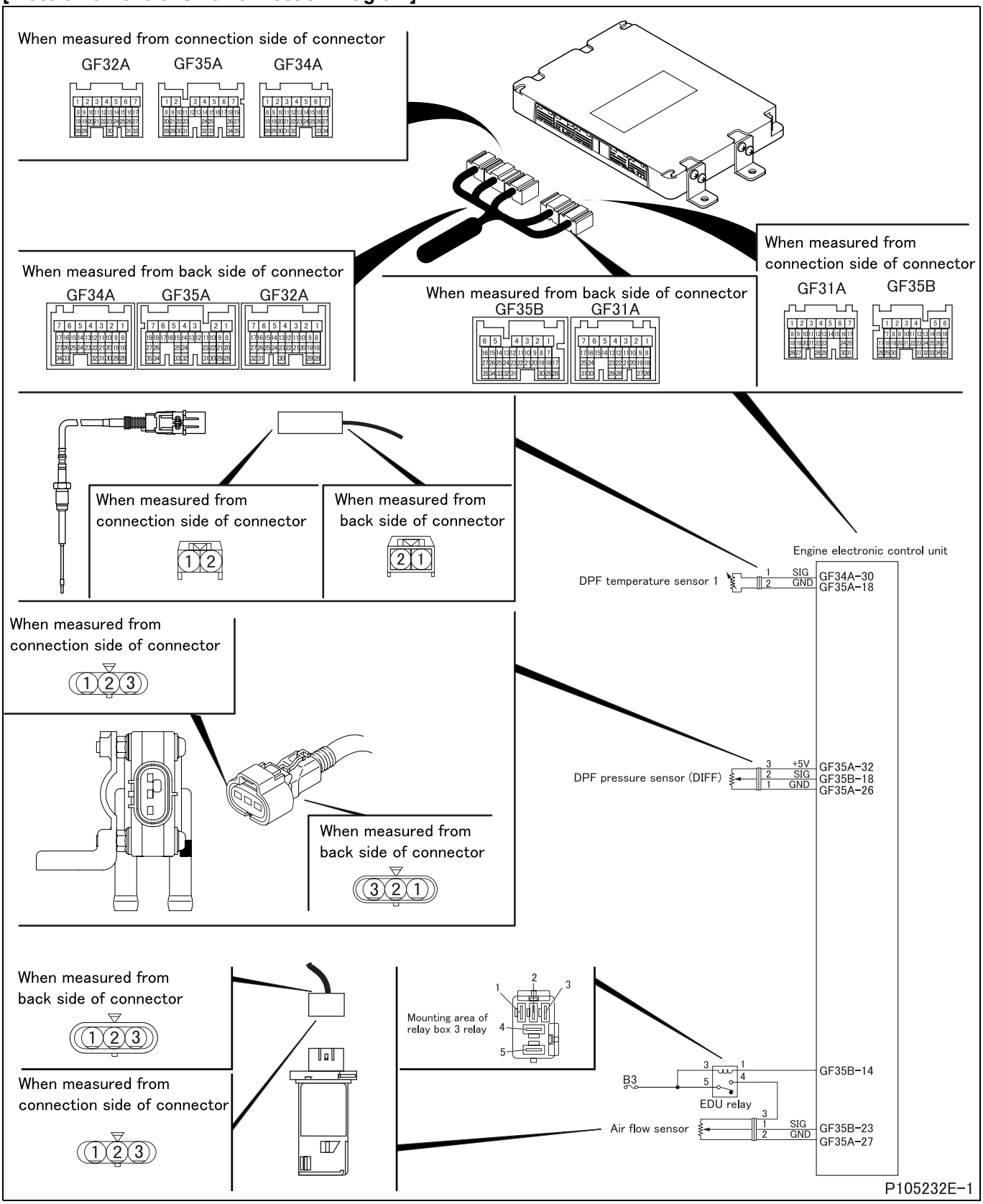

[Parts Identification and Location]

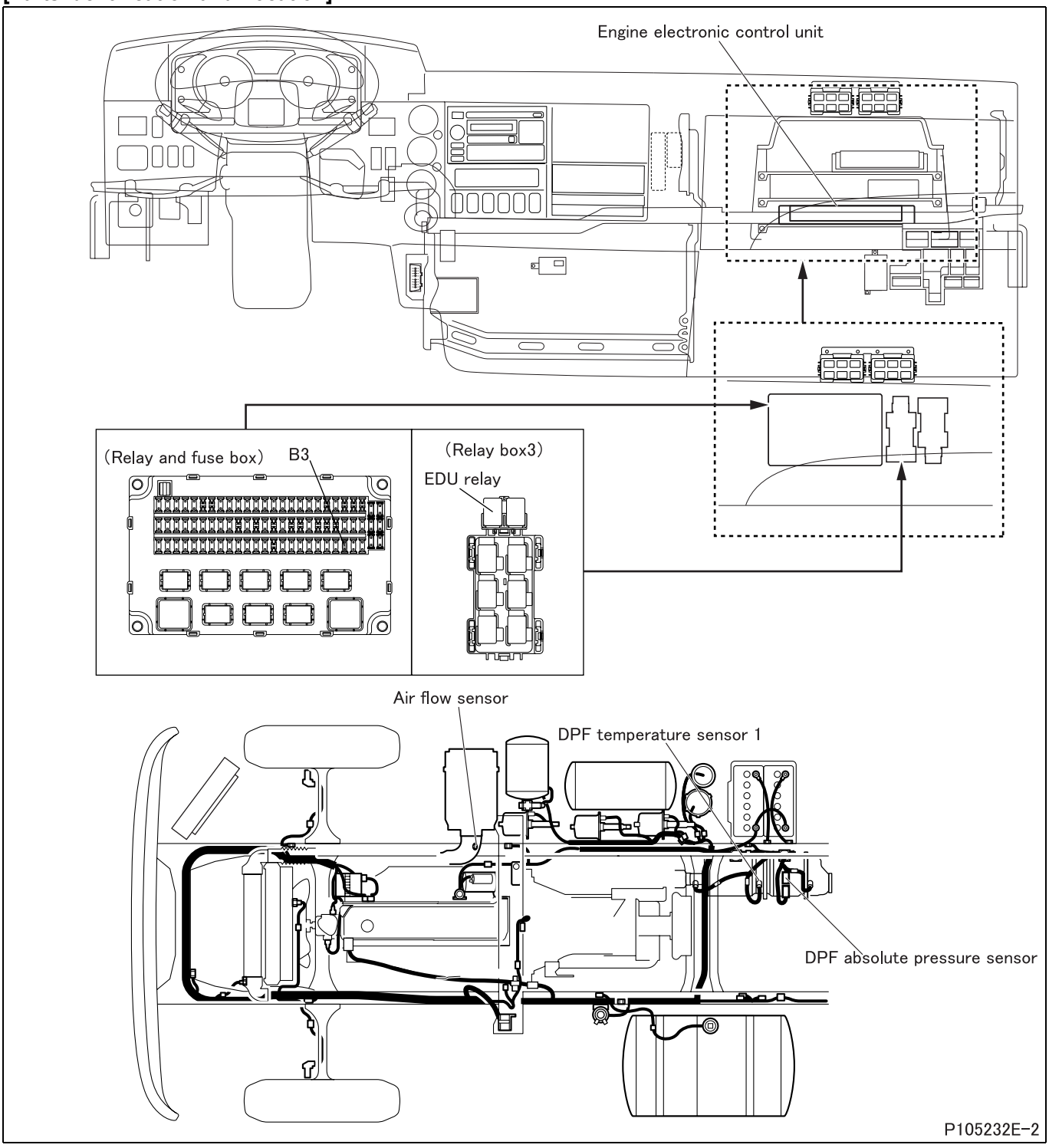

[Fault diagnosis]

- Perform checks in the sequence of the following steps.

Step 1	Inspection items		Inspection by control data
	Maintenance item		Check if following diagnosis codes occur simultaneously. • P0101 “Airflow Sensor (Plausibility)” • P0102 “Airflow Sensor (Low)” • P0103 “Airflow Sensor (High)” • P0427 “EXH Gas Temp SNSR1 (Low)” • P0428 “EXH Gas Temp SNSR1 (High)” • P0545 “DPF Temp SNSR (upstream) Low” • P0546 “DPF Temp SNSR (upstream) High” • P1660 “DPF Lamp Control Circuit (Low)” • P1661 “DPF Lamp Control Circuit (High)” • P2032 “Exhaust Gas Temp (Low)” • P2033 “Exhaust Gas Temp (High)” • P2453 “DPF Diff SNSR (Plausi) & MFF” • P2454 “DPF Diff SNSR (Low) & MFF” • P2455 “DPF Diff SNSR (High) & MFF”
	Inspection condition		Ensure that each sensor mounting condition is free of abnormalities.
	Requirements		Codes occur.
	Inspection result (Is the judging standard satisfied?)	YES	After inspection of diagnosis code that is occurring, go to step 2.
		NO	Go to step 2.

Step 2	Inspection items		Inspection of DPF temperature sensor 1 unit
	Maintenance item		Measure value of resistance between terminal No. 1 and 2.
	Inspection condition		• Put DPF temperature sensor 1 in vessel filled with engine oil. • Heat the oil to each of the specified temperatures. Stir the oil well while doing so.
	Requirements		• 20°C {68°F} : 241.8 kΩ • 50°C {122°F} : 106.2 $^{+74.3}_{-41.8}$ kΩ • 100°C {212°F} : 33.56 $^{+17.60}_{-10.60}$ kΩ • 150°C {302°F} : 13.90 $^{+5.36}_{-3.60}$ kΩ • 200°C {392°F} : 6.896 $^{+2.064}_{-1.252}$ kΩ
	Inspection result (Is the judging standard satisfied?)	YES	Go to step 3.
		NO	Cleaning of sensor

<Step 2 inspection diagram>

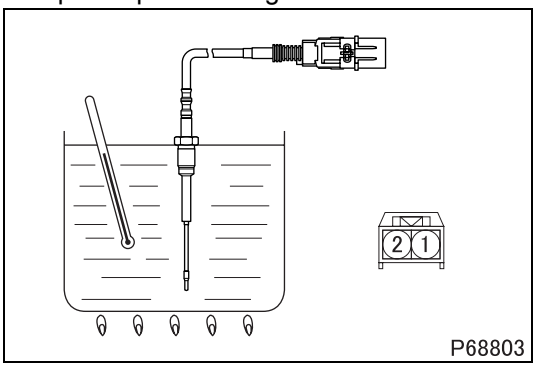

Step 3	Inspection items		Inspection of oil level
	Maintenance item		Inspection of engine oil level
	Inspection condition		Engine is stopped.
	Requirements		Oil level for inspection is not exceeded.
	Inspection result (Is the judging standard satisfied?)	YES	Go to step 4.
		NO	After replacement of oil, go to step 4.

<Step 3 inspection diagram>

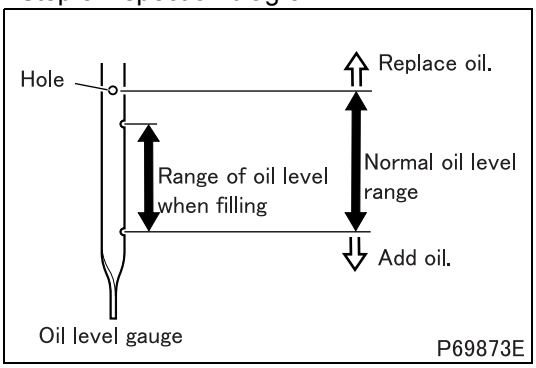

Step 4	Inspection items		Inspection of pressure hose
	Maintenance item		Check pressure hose of DPF absolute pressure sensor and DPF pressure sensor (DIFF) for connection and cracks.
	Inspection condition		–
	Requirements		Nothing abnormal detected
	Inspection result (Is the judging standard satisfied?)	YES	Go to step 5.
		NO	After correction and replacement of hose, go to step 5.

Step 5	Inspection items		Unit inspection of diesel particulate filter
	Maintenance item		Check the exhaust passage inside the diesel particulate filter for adhesion of soot in large quantity.
	Inspection condition		Remove diesel particulate filter.
	Requirements		No soot is deposited.
	Inspection result (Is the judging standard satisfied?)	YES	Go to step 6.
		NO	After replacement of ceramic filter, perform resetting the DPF-related information. (See Gr15.)

<Step 5 inspection diagram>

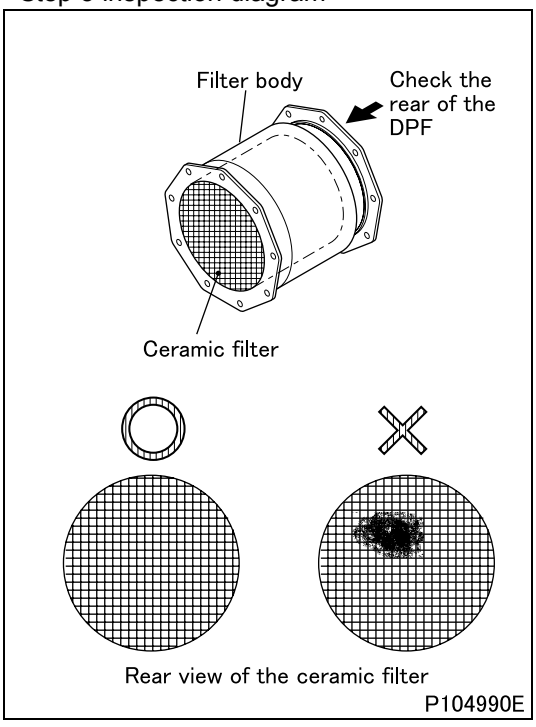

Step 6	Inspection items		Diesel Particulate Filter Unit Inspection for Clogging and Cleaning the Diesel Particulate Filter Unit (Perform completely.)
	Maintenance item		See Gr15 “Diesel Particulate Filter Unit Inspection for Clogging and Cleaning the Diesel Particulate Filter Unit”
	Inspection condition		Perform the following preparatory works. • Place the transmission in neutral (place the automatic transmission in P range). • Turn the steering wheel in neutral position and securely apply the parking brake. • Turn off air conditioner not to increase the engine speed. • Check diagnosis code of each electronic control system. If any fault exists, rectify it. • Resetting the DPF-related information (perform “History reset” of Multi-Use Tester) (See Gr15 “Resetting the DPF-related Information”.) • Warm up the engine until the engine coolant has been heated to more than 70°C {158°F} (verify from Service Data “Engine Coolant Temperature” or “35: Water Temperature”).
	Requirements		This diagnosis code does not occur again.
	Inspection result (Is the judging standard satisfied?)	YES	Go to step 7.
		NO	Replacement of electronic control unit

Step 7	Inspection items		Inspection of DPF pressure sensor (DIFF) unit
	Maintenance item		Measure value of voltage between connector terminal No. 2 (+) and 1 (–).
	Inspection condition		• Apply voltage DC 5 V across terminals No. 3 (+) and 1 (–). • Gradually increase applied air pressure.
	Requirements		• 0 ± 3.5 kPa {0 ± 0.5 psi, 0 ± 0.04 kgf/cm^2}: 1 V • 100 ± 3.5 kPa {15 ± 0.5 psi, 1.02 ± 0.04 kgf/cm^2}: 4.5 V
	Inspection result (Is the judging standard satisfied?)	YES	Go to step 8.
		NO	Replacement of sensor

<Step 7 inspection diagram>

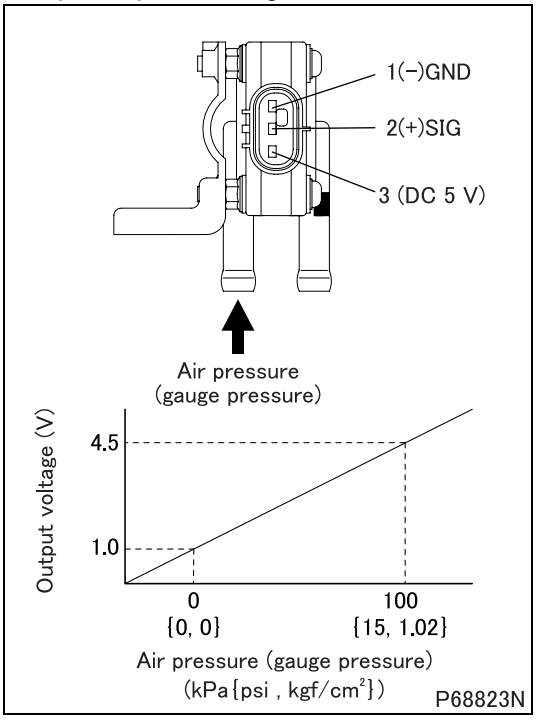

Step 8	Inspection items		Inspection of sensor unit
	Maintenance item		Since inspection of single part is not easy, whether characteristics are deteriorated or not must be checked for the sensor mounted on the current vehicle by measuring and comparing the amount of sensor intake air of the sensor currently mounted on vehicle and that replaced with new one by the service data. **(1) Prepare for inspection** • Clean or replace air cleaner element. • Prepare a new air flow sensor. • Warm up the engine fully. **(2) Measure the intake air of current sensor** • Keep pressing the accelerator pedal until it bottom the stopper bolt from the idling state. (no load maximum rotation) • Measure the following items from among “Service data”. **<General Scanning Tool used>** • Engine speed: “Ne” (rpm) • Intake air flow rate: “Air Flow Rate from MAFS” (g/s) **<Multi-Use Tester used>** • Engine speed: 01 “Engine Revolution” (rpm) • Intake air flow rate: 3A “Air Flow Sensor Output” (g/hr) **(3) Measure the intake air of new sensor** • Replace the currently mounted sensor with a new sensor. • Keep pressing the accelerator pedal until it bottom the stopper bolt from the idling state. (no load maximum rotation) • Measure intake air flow at the same rpm as that of engine revolution in item (2) of “Service data”. **(4) Comparison whether characteristics are deteriorated** • Calculate the characteristics deterioration factor (%) by the following equation. • Characteristics deterioration factor (%) = (intake air of new item – current intake air) × 100/intake air of new item.
	Inspection condition		–
	Requirements		10% or less
	Inspection result (Is the judging standard satisfied?)	YES	Go to step 9.
		NO	Replacement of sensor

Step 9	Inspection items		Inspection by control data
	Maintenance item		Perform actuator test item No. B9 “Fuel Leak Check”.
	Inspection condition		Engine start: At idle
	Requirements		There is no leak from injectors (six).
	Inspection result (Is the judging standard satisfied?)	YES	Replacement of diesel particulate filter
		NO	Replacement of injector

[Fault code]
Diagnosis code: P1418/Flash code: 92
[Monitor]
High temperature abnormality at 2nd stage of manual diesel particulate filter regeneration
[Fault (outline)]
Plausibility
[Diagnosis check]
- Temperature before front oxidation catalyst and ceramic filter is monitored by DPF temperature sensor 1 for temperature status during manual diesel particulate filter regeneration.

[Code generation condition]
- Temperature of diesel particulate filter being manually regenerated remains at 670°C {1238°F} or higher for 10 minutes.
  (Warning lamp is lit and diagnosis code is displayed on first establishment of code generation condition.)

[Diagnosis check timing]
- When code generation condition is established after starter switch ON

[Diagnostic requirement]
- 2 seconds passed after starter switch ON
- 2 seconds passed after cranking
- Battery voltage: normal

[Control effected by electronic control unit during fault]
- Injection quantity is limited.
- Exhaust gas recirculation control is stopped.
- Throttle control is stopped.
- Diesel particulate filter regeneration is stopped.

[Probable cause of trouble]
- Abnormality of diesel particulate filter regeneration control
- Abnormality of DPF temperature sensor 1
- Abnormality in electronic control unit
- Abnormality of common rail
- Abnormality of diesel particulate filter (front oxidation catalyst)

[Recoverability]
<Control during fault>
- Recovered if signal becomes normal when starter switch is turned OFF to ON (power supply resumed to electronic control unit).

NOTE
- **Recovery from a fault of this code requires “Resetting the DPF-related information”; troubleshooting steps on the following pages, therefore, must be completely performed.**

<Warning lamp>
- Extinguished after input of normal signal.

<Fault code>
- If code recovered to normal, automatically cleared at 40th warm up cycle after warning lamp is lit.
  (To clear as desired, erase from the memory.)

Warm up cycle : “Starter switch ON to start engine till starter switch OFF after coolant temperature increased and engine warmed up” constitutes 1 warm up cycle.

[Electronic Control Unit Connection Diagram]

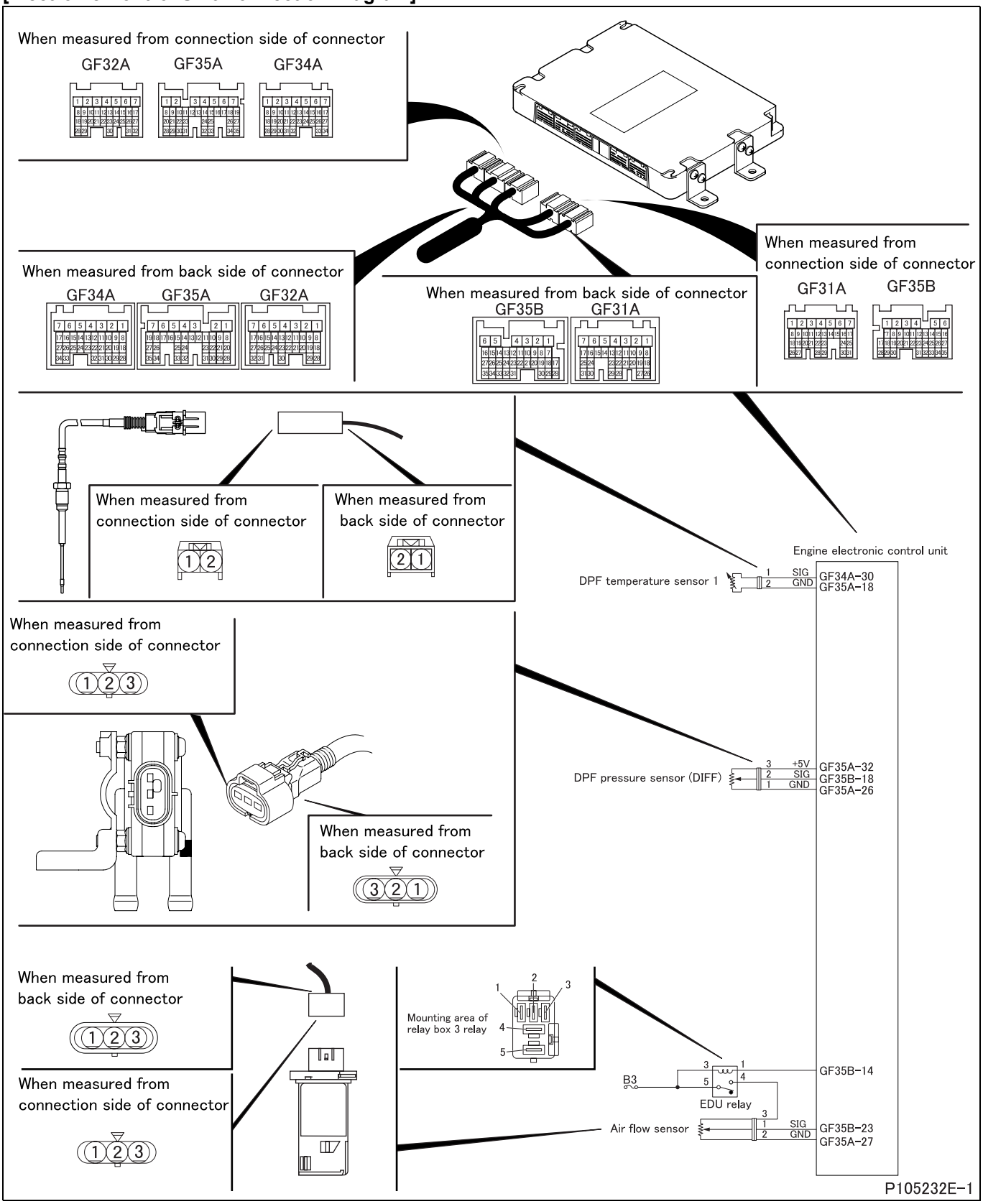

[Parts Identification and Location]

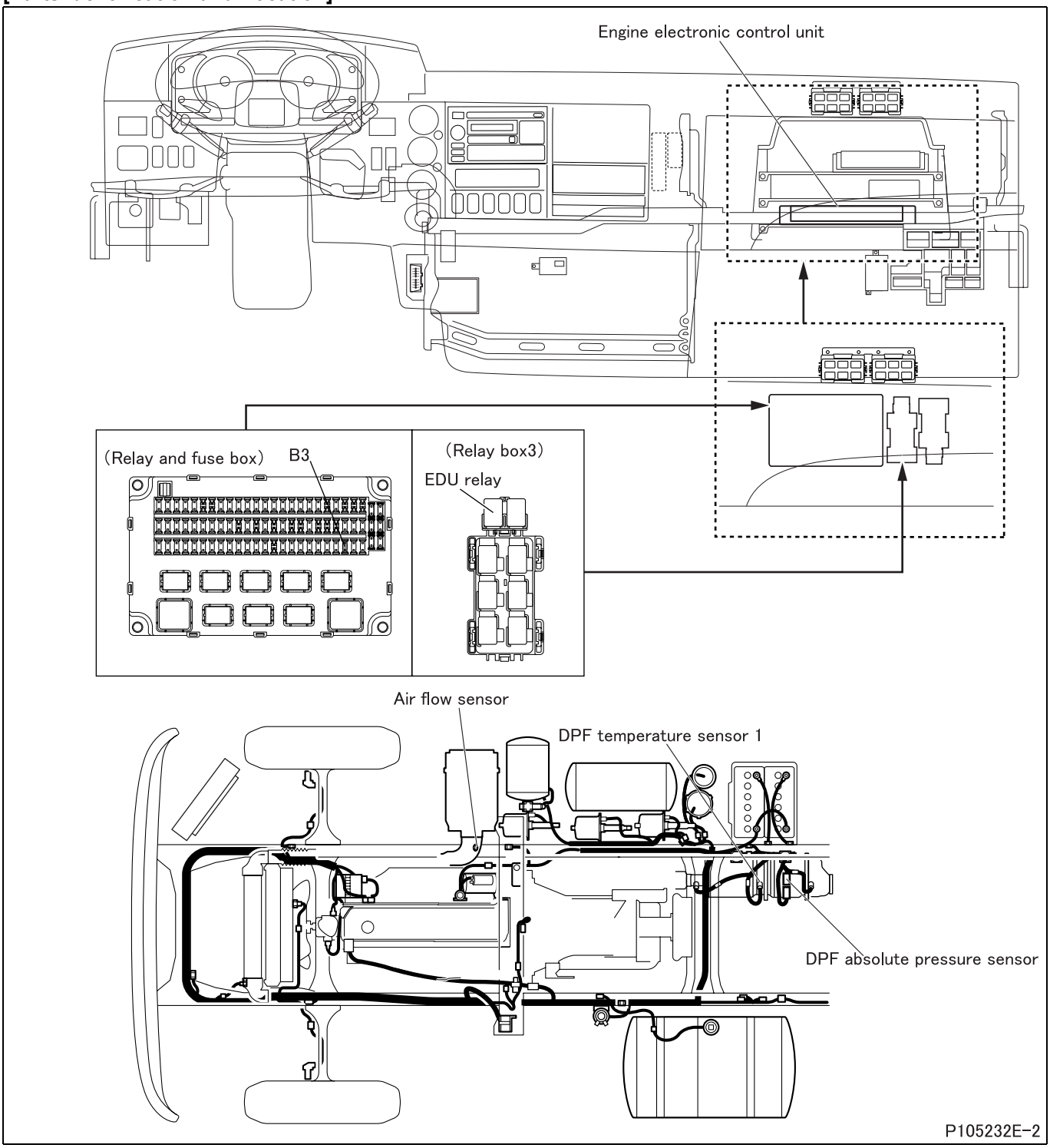

[Fault diagnosis]

- Perform checks in the sequence of the following steps.

Step 1	Inspection items		Inspection by control data
	Maintenance item		Check if following diagnosis codes occur simultaneously. • P0101 “Airflow Sensor (Plausibility)” • P0102 “Airflow Sensor (Low)” • P0103 “Airflow Sensor (High)” • P0427 “EXH Gas Temp SNSR1 (Low)” • P0428 “EXH Gas Temp SNSR1 (High)” • P0545 “DPF Temp SNSR (upstream) Low” • P0546 “DPF Temp SNSR (upstream) High” • P1660 “DPF Lamp Control Circuit (Low)” • P1661 “DPF Lamp Control Circuit (High)” • P2032 “Exhaust Gas Temp (Low)” • P2033 “Exhaust Gas Temp (High)” • P2453 “DPF Diff SNSR (Plausi) & MFF” • P2454 “DPF Diff SNSR (Low) & MFF” • P2455 “DPF Diff SNSR (High) & MFF”
	Inspection condition		Ensure that each sensor mounting condition is free of abnormalities.
	Requirements		Codes occur.
	Inspection result (Is the judging standard satisfied?)	YES	After inspection of diagnosis code that is occurring, go to step 2.
		NO	Go to step 2.

Step 2	Inspection items		Inspection of DPF temperature sensor 1 unit
	Maintenance item		Measure value of resistance between terminal No. 1 and 2.
	Inspection condition		• Put DPF temperature sensor 1 in vessel filled with engine oil. • Heat the oil to each of the specified temperatures. Stir the oil well while doing so.
	Requirements		• 20°C {68°F} : 241.8 kΩ • 50°C {122°F} : 106.2 $^{+74.3}_{-41.8}$ kΩ • 100°C {212°F} : 33.56 $^{+17.60}_{-10.60}$ kΩ • 150°C {302°F} : 13.90 $^{+5.36}_{-3.60}$ kΩ • 200°C {392°F} : 6.896 $^{+2.064}_{-1.252}$ kΩ
	Inspection result (Is the judging standard satisfied?)	YES	Go to step 3.
		NO	Cleaning of sensor

<Step 2 inspection diagram>

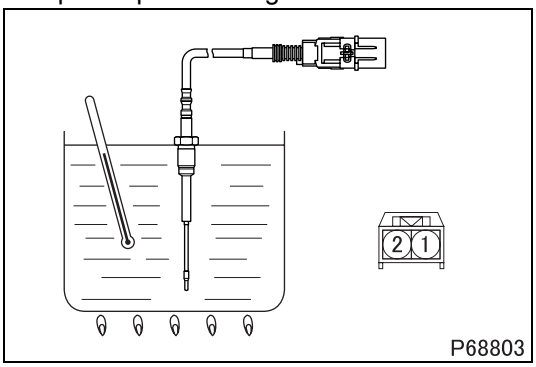

Step 3	Inspection items		Inspection of oil level
	Maintenance item		Inspection of engine oil level
	Inspection condition		Engine is stopped.
	Requirements		Oil level for inspection is not exceeded.
	Inspection result (Is the judging standard satisfied?)	YES	Go to step 4.
		NO	After replacement of oil, go to step 4.

<Step 3 inspection diagram>

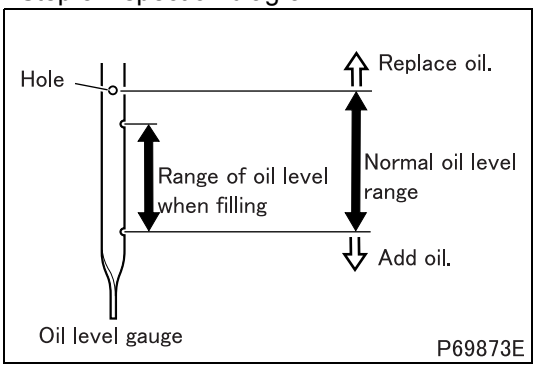

Step 4	Inspection items		Inspection of pressure hose
	Maintenance item		Check pressure hose of DPF absolute pressure sensor and DPF pressure sensor (DIFF) for connection and cracks.
	Inspection condition		–
	Requirements		Nothing abnormal detected
	Inspection result (Is the judging standard satisfied?)	YES	Go to step 5.
		NO	After correction and replacement of hose, go to step 5.

Step 5	Inspection items		Unit inspection of diesel particulate filter
	Maintenance item		Check the exhaust passage inside the diesel particulate filter for adhesion of soot in large quantity.
	Inspection condition		Remove diesel particulate filter.
	Requirements		No soot is deposited.
	Inspection result (Is the judging standard satisfied?)	YES	Go to step 6.
		NO	After replacement of ceramic filter, perform resetting the DPF-related information. (See Gr15.)

<Step 5 inspection diagram>

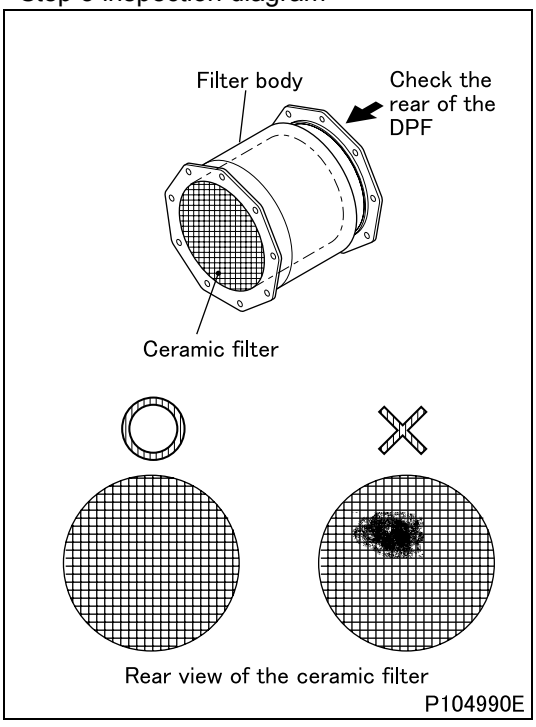

Step 6	Inspection items		Diesel Particulate Filter Unit Inspection for Clogging and Cleaning the Diesel Particulate Filter Unit (Perform completely.)
	Maintenance item		See Gr15 “Diesel Particulate Filter Unit Inspection for Clogging and Cleaning the Diesel Particulate Filter Unit”
	Inspection condition		Perform the following preparatory works. • Place the transmission in neutral (place the automatic transmission in P range). • Turn the steering wheel in neutral position and securely apply the parking brake. • Turn off air conditioner not to increase the engine speed. • Check diagnosis code of each electronic control system. If any fault exists, rectify it. • Resetting the DPF-related information (perform “History reset” of Multi-Use Tester) (See Gr15 “Resetting the DPF-related Information”.) • Warm up the engine until the engine coolant has been heated to more than 70°C {158°F} (verify from Service Data “Engine Coolant Temperature” or “35: Water Temperature”).
	Requirements		This diagnosis code does not occur again.
	Inspection result (Is the judging standard satisfied?)	YES	Go to step 7.
		NO	Replacement of electronic control unit

Step 7	Inspection items		Inspection of DPF pressure sensor (DIFF) unit
	Maintenance item		Measure value of voltage between connector terminal No. 2 (+) and 1 (–).
	Inspection condition		• Apply voltage DC 5 V across terminals No. 3 (+) and 1 (–). • Gradually increase applied air pressure.
	Requirements		• 0 ± 3.5 kPa {0 ± 0.5 psi, 0 ± 0.04 kgf/cm^2}: 1 V • 100 ± 3.5 kPa {15 ± 0.5 psi, 1.02 ± 0.04 kgf/cm^2}: 4.5 V
	Inspection result (Is the judging standard satisfied?)	YES	Go to step 8.
		NO	Replacement of sensor

<Step 7 inspection diagram>

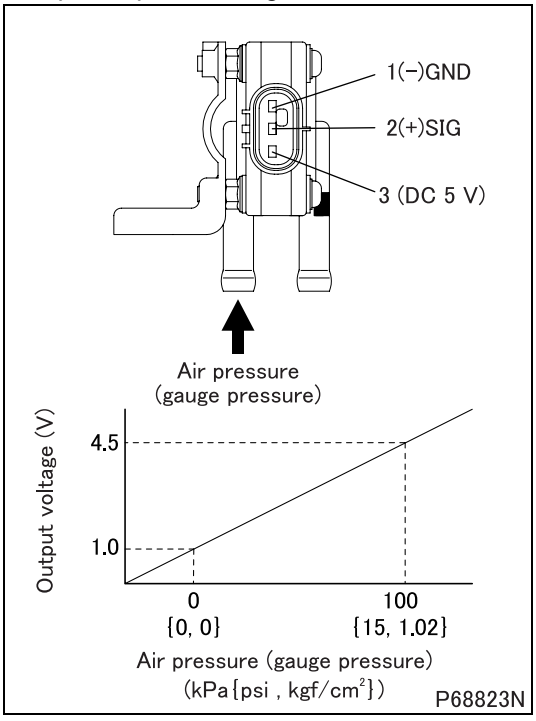

Step 8	Inspection items		Inspection of sensor unit
	Maintenance item		Since inspection of single part is not easy, whether characteristics are deteriorated or not must be checked for the sensor mounted on the current vehicle by measuring and comparing the amount of sensor intake air of the sensor currently mounted on vehicle and that replaced with new one by the service data. **(1) Prepare for inspection** • Clean or replace air cleaner element. • Prepare a new air flow sensor. • Warm up the engine fully. **(2) Measure the intake air of current sensor** • Keep pressing the accelerator pedal until it bottom the stopper bolt from the idling state. (no load maximum rotation) • Measure the following items from among “Service data”. **<General Scanning Tool used>** • Engine speed: “Ne” (rpm) • Intake air flow rate: “Air Flow Rate from MAFS” (g/s) **<Multi-Use Tester used>** • Engine speed: 01 “Engine Revolution” (rpm) • Intake air flow rate: 3A “Air Flow Sensor Output” (g/hr) **(3) Measure the intake air of new sensor** • Replace the currently mounted sensor with a new sensor. • Keep pressing the accelerator pedal until it bottom the stopper bolt from the idling state. (no load maximum rotation) • Measure intake air flow at the same rpm as that of engine revolution in item (2) of “Service data”. **(4) Comparison whether characteristics are deteriorated** • Calculate the characteristics deterioration factor (%) by the following equation. • Characteristics deterioration factor (%) = (intake air of new item – current intake air) × 100/intake air of new item.
	Inspection condition		–
	Requirements		10% or less
	Inspection result (Is the judging standard satisfied?)	YES	Go to step 9.
		NO	Replacement of sensor

Step 9	Inspection items		Inspection by control data
	Maintenance item		Perform actuator test item No. B9 “Fuel Leak Check”.
	Inspection condition		Engine start: At idle
	Requirements		There is no leak from injectors (six).
	Inspection result (Is the judging standard satisfied?)	YES	Replacement of diesel particulate filter
		NO	Replacement of injector

[Fault code]
Diagnosis code: P1421/Flash code: 92
[Monitor]
High particulate matter deposit level 1
[Fault (outline)]
Plausibility
[Diagnosis check]
- Issue of diesel particulate filter regeneration request instruction for diesel particulate filter in non-regenerated state is monitored.

[Code generation condition]
- Particulate matter (PM) deposit is more than specified value (clogging level: low)
- Filter flow resistance coefficient derived from output of DPF pressure sensor (DIFF) exceeds threshold value. (Warning lamp is lit and diagnosis code is displayed on first establishment of code generation condition.)

[Diagnosis check timing]
- When code generation condition is established after starter switch ON

[Diagnostic requirement]
- 2 seconds passed after starter switch ON
- 2 seconds passed after cranking
- Battery voltage: normal

[Control effected by electronic control unit during fault]
- Injection quantity is limited.
- Exhaust gas recirculation control is stopped.
- Throttle control is stopped.

[Probable cause of trouble]
- Abnormality of diesel particulate filter indicator lamp
- Abnormality of diesel particulate filter cleaning switch
- Manual diesel particulate filter regeneration is not performed.
- Excessive smoke emission (due to malfunction of engine proper, common rail or exhaust gas recirculation system)
- Abnormality of air flow sensor
- Abnormality of DPF absolute pressure sensor
- Abnormality of DPF pressure sensor (DIFF)
- Abnormality of diesel particulate filter

[Recoverability]
<Control during fault>
- Recovered if signal becomes normal with starter switch ON position.

NOTE

- **Recovery from a fault of this code requires to perform manual regeneration; be sure to perform it.**

<Warning lamp>
- Extinguished after input of normal signal.

<Fault code>
- If code recovered to normal, automatically cleared at 40th warm up cycle after warning lamp is lit. (To clear as desired, erase from the memory.)

Warm up cycle : “Starter switch ON to start engine till starter switch OFF after coolant temperature increased and engine warmed up” constitutes 1 warm up cycle.

[Electronic Control Unit Connection Diagram]

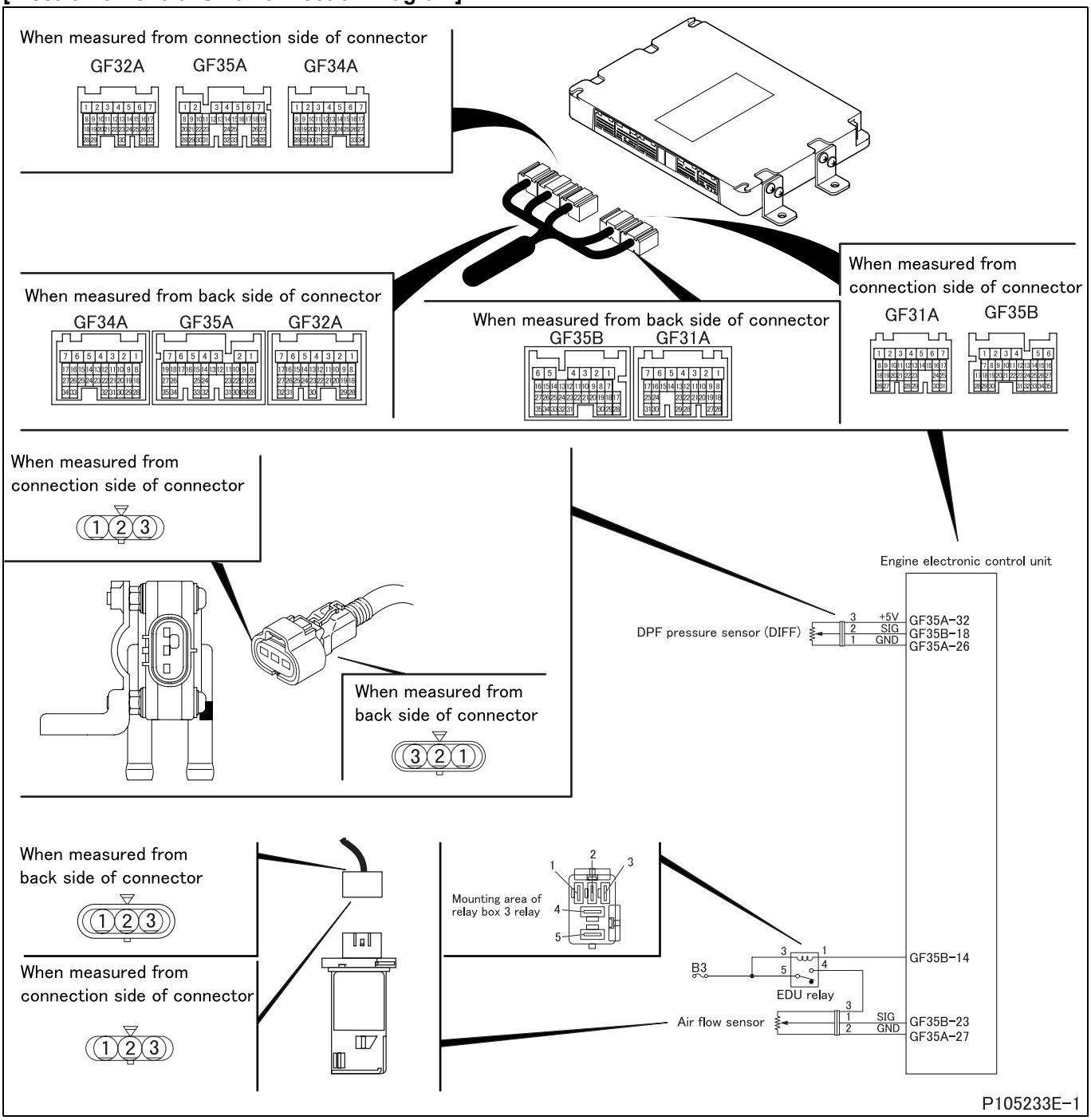

[Parts Identification and Location]

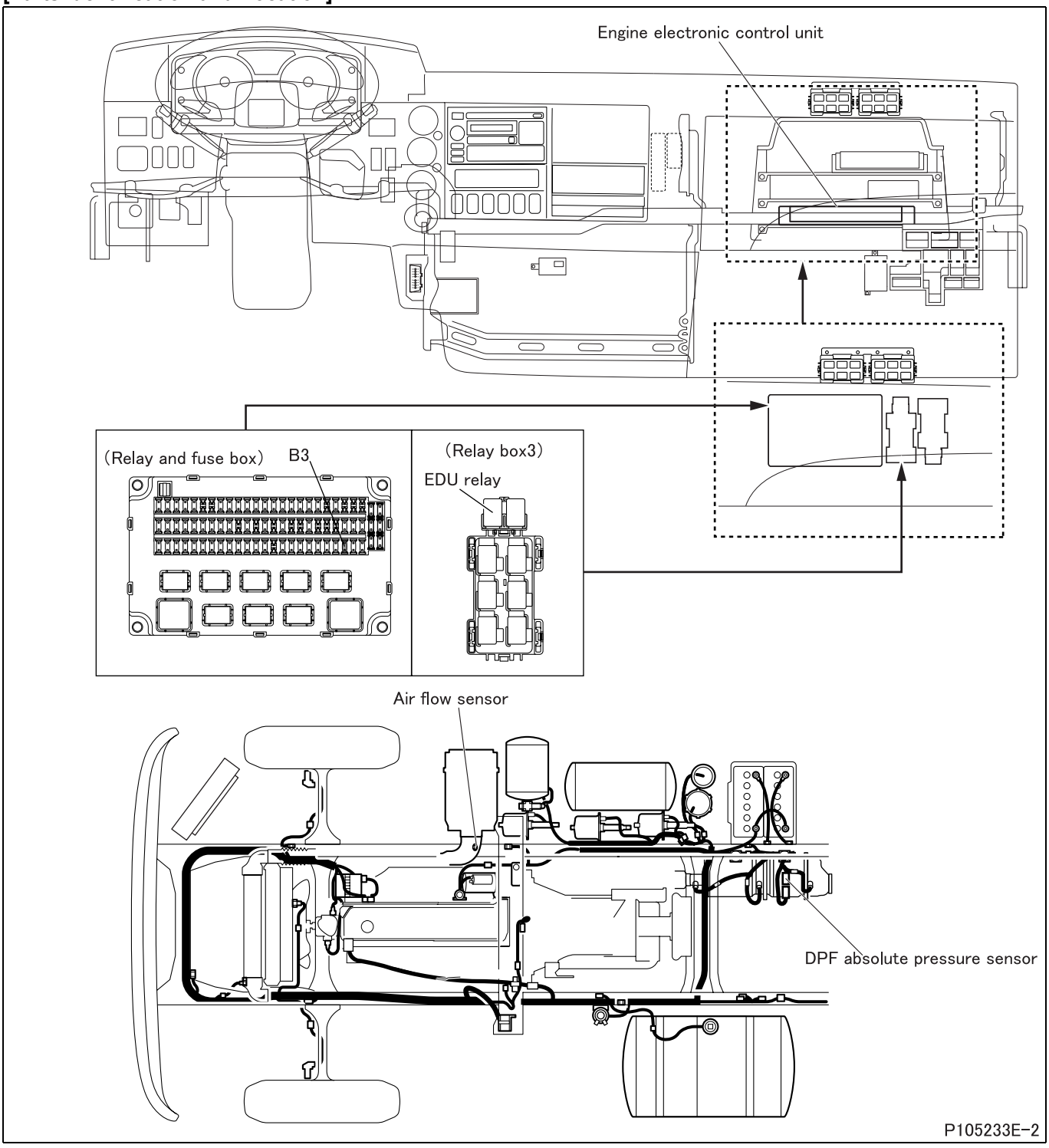

[Fault diagnosis]

- Perform checks in the sequence of the following steps.

Step 1	Inspection items		Inspection of oil level
	Maintenance item		Inspection of engine oil level
	Inspection condition		Engine stopped
	Requirements		Oil level for inspection is not exceeded.
	Inspection result (Is the judging standard satisfied?)	YES	Go to step 2.
		NO	After replacement of oil, go to step 2.

<Step 1 inspection diagram>

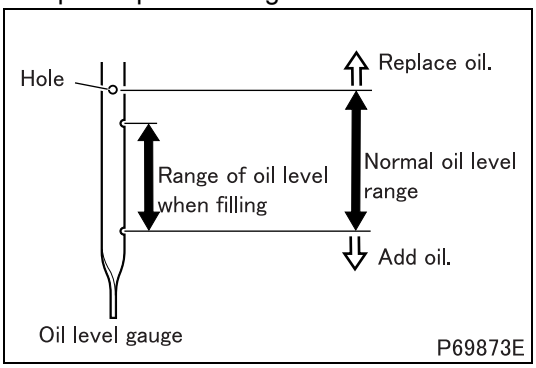

Step 2	Inspection items		Inspection by manual diesel particulate filter regeneration
	Maintenance item		Perform Multi-Use Tester actuator test item No. A5 “DPF Regeneration (Manual)”, and clean ceramic diesel particulate filter.
	Inspection condition		• Vehicle: stationary (vehicle speed 0 km/h {0 MPH}) • Starter switch: ON (engine started) • Engine start: At idle • Place the transmission in neutral. (place the automatic transmission in P range) • Parking brake: vehicle parked (parking brake switch: ON) • After engine warm-up
	Requirements		This diagnosis code does not occur again.
	Inspection result (Is the judging standard satisfied?)	YES	End of inspection
		NO	Go to step 3.

Step 3	Inspection items		Unit inspection of diesel particulate filter
	Maintenance item		Check the exhaust passage inside the diesel particulate filter for adhesion of soot in large quantity.
	Inspection condition		Remove diesel particulate filter.
	Requirements		No soot is deposited.
	Inspection result (Is the judging standard satisfied?)	YES	Go to step 4.
		NO	After replacement of ceramic filter, perform resetting the DPF-related information. (See Gr15.)

<Step 3 inspection diagram>

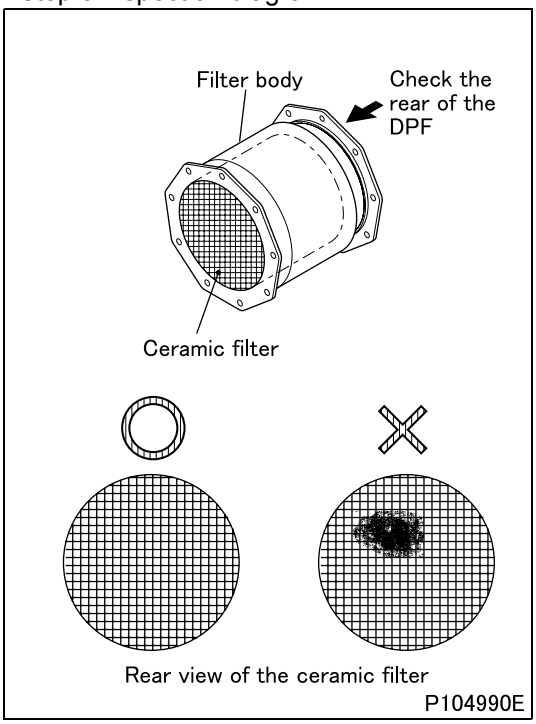

Step 4	Inspection items		Inspection of diesel particulate filter unit for clogging and cleaning of the diesel particulate filter unit (Perform completely.)
	Maintenance item		See Gr15 “Diesel Particulate Filter Unit Inspection for Clogging and Cleaning the Diesel Particulate Filter Unit”
	Inspection condition		Perform the following preparatory works. • Place the transmission in neutral. (place the automatic transmission in P range) • Turn the steering wheel in neutral position and securely apply the parking brake. • Turn off air conditioner not to increase the engine speed. • Check diagnosis code of each electronic control system. If any fault exists, rectify it. • Resetting the DPF-related information (perform “History reset” of Multi-Use Tester) (See Gr15 “Resetting the DPF-related Information”.) • Warm up the engine until the engine coolant has been heated to more than 70°C {158°F}. (verify from Service Data “Engine Coolant Temperature” or “35: Water Temperature”)
	Requirements		This diagnosis code does not occur again.
	Inspection result (Is the judging standard satisfied?)	YES	End of inspection
		NO	Go to step 5.

Step 5	Inspection items		Inspection by control data
	Maintenance item		Measure item No. 93 “DPF Lamp” of Service Data.
	Inspection condition		Perform Multi-Use Tester actuator test item No. A8 “DPF Lamp”.
	Requirements		Diesel particulate filter indicator lamp illuminates (automatic reset after 15 seconds)
	Inspection result (Is the judging standard satisfied?)	YES	Go to step 6.
		NO	Replacement of engine electronic control unit

Step 6	Inspection items		Inspection by control data
	Maintenance item		Measure item No. 75 “DPF SW” of Service Data.
	Inspection condition		–
	Requirements		Press diesel particulate filter cleaning switch and check that “DPF SW” display switches from OFF to ON.
	Inspection result (Is the judging standard satisfied?)	YES	Go to step 7.
		NO	Replacement of diesel particulate filter cleaning switch or engine electronic control unit

Step 7	Inspection items		Inspection of pressure hose
	Maintenance item		Check pressure hose of DPF absolute pressure sensor and DPF pressure sensor (DIFF) for connection and cracks.
	Inspection condition		–
	Requirements		Nothing abnormal detected
	Inspection result (Is the judging standard satisfied?)	YES	Go to step 8.
		NO	After correction and replacement of hose, go to step 8.

Step 8	Inspection items		Inspection of DPF pressure sensor (DIFF)
	Maintenance item		Measure value of voltage between connector terminals No. 2 (+) and 1 (–).
	Inspection condition		• Apply voltage DC 5 V across terminals No. 3 (+) and 1 (–). • Gradually increase applied air pressure.
	Requirements		• 0 ± 3.5 kPa {0 ± 0.5 psi, 0 ± 0.04 kgf/cm^2}: 1 V • 100 ± 3.5 kPa {15 ± 0.5 psi, 1.02 ± 0.04 kgf/cm^2}: 4.5 V
	Inspection result (Is the judging standard satisfied?)	YES	Go to step 9.
		NO	Replacement of DPF pressure sensor (DIFF)

<Step 8 inspection diagram>

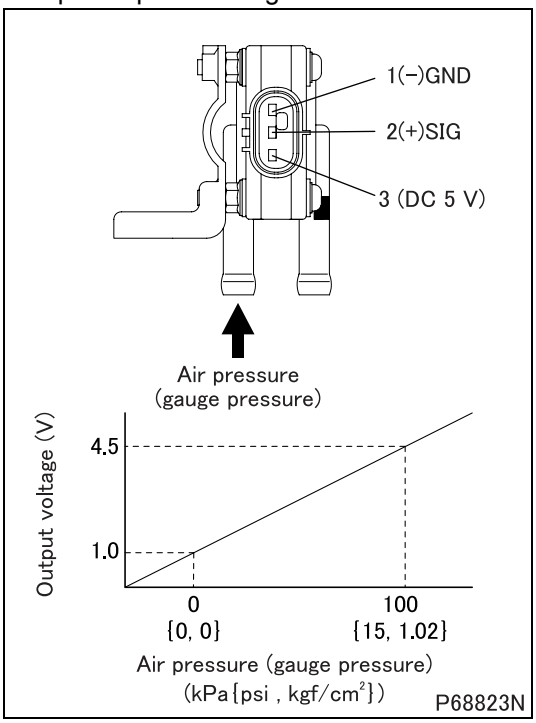

Step 9	Inspection items		Inspection of air flow sensor unit
	Maintenance item		Since inspection of single part is not easy, whether characteristics are deteriorated or not must be checked for the sensor mounted on the current vehicle by measuring and comparing the amount of sensor intake air of the sensor currently mounted on vehicle and that replaced with new one by the service data. **(1) Prepare for inspection** • Clean or replace air cleaner element. • Prepare a new air flow sensor. • Warm up the engine fully. **(2) Measure the intake air of current sensor** • Keep pressing the accelerator pedal until it bottom the stopper bolt from the idling state. (no load maximum rotation) • Measure the following items from among “Service data”. **<General Scanning Tool used>** • Engine speed: “Ne” (rpm) • Intake air flow rate: “Air Flow Rate from MAFS” (g/s) **<Multi-Use Tester used>** • Engine speed: 01 “Engine Revolution” (rpm) • Intake air flow rate: 3A “Air Flow Sensor Output” (g/hr) **(3) Measure the intake air of new sensor** • Replace the currently mounted sensor with a new sensor. • Keep pressing the accelerator pedal until it bottom the stopper bolt from the idling state. (no load maximum rotation) • Measure intake air flow at the same rpm as that of engine revolution in item (2) of “Service data”. **(4) Comparison whether characteristics are deteriorated** • Calculate the characteristics deterioration factor (%) by the following equation. • Characteristics deterioration factor (%) = (intake air of new item – current intake air) × 100/intake air of new item.
	Inspection condition		–
	Requirements		10% or less
	Inspection result (Is the judging standard satisfied?)	YES	Go to step 10.
		NO	Replacement of air flow sensor

Step 10	Inspection items		Inspection by control data
	Maintenance item		Perform actuator test item No. B9 “Fuel Leak Check”.
	Inspection condition		Engine start: At idle
	Requirements		There is no leak from injectors (six).
	Inspection result (Is the judging standard satisfied?)	YES	• Inspection of exhaust gas recirculation system (exhaust gas recirculation pipe, exhaust gas recirculation cooler, exhaust gas recirculation valve) • Inspection of engine
		NO	Replacement of injector

[Fault code]
Diagnosis code: P1422/Flash code: 92
[Monitor]
High particulate matter deposit level 2
[Fault (outline)]
Plausibility
[Diagnosis check]
- Diesel particulate filter is checked for clogging.

[Code generation condition]
- Particulate matter (PM) deposit is more than specified valve (clogging level: low to medium)
- Filter flow resistance coefficient derived from output of DPF pressure sensor (DIFF) exceeds threshold value. (Warning lamp is lit and diagnosis code is displayed on first establishment of code generation condition.)

[Diagnosis check timing]
- When code generation condition is established after starter switch ON

[Diagnostic requirement]
- 2 seconds passed after starter switch ON
- 2 seconds passed after cranking
- Battery voltage: normal

[Control effected by electronic control unit during fault]
- Injection quantity is limited.
- Exhaust gas recirculation control is stopped.
- Throttle control is stopped.
- Diesel particulate filter regeneration (manual or automatic) is stopped.
- Auto cruise control is stopped.
- Fault detection for controller area network communication is stopped.

[Probable cause of trouble]
- Abnormality of diesel particulate filter indicator lamp
- Abnormality of diesel particulate filter cleaning switch
- Manual diesel particulate filter regeneration is not performed.
- Excessive smoke emission (due to malfunction of engine proper, common rail or exhaust gas recirculation system)
- Abnormality of air flow sensor
- Abnormality of DPF absolute pressure sensor
- Abnormality of DPF pressure sensor (DIFF)
- Abnormality of diesel particulate filter

[Recoverability]
<Control during fault>
- Recovered if signal becomes normal with starter switch ON position.

NOTE
- **Recovery from a fault of this code requires “Resetting the DPF-related information”; troubleshooting steps on the following pages, therefore, must be completely performed.**

<Warning lamp>
- Extinguished after input of normal signal.

<Fault code>
- If code recovered to normal, automatically cleared at 40th warm up cycle after warning lamp is lit. (To clear as desired, erase from the memory.)

Warm up cycle : “Starter switch ON to start engine till starter switch OFF after coolant temperature increased and engine warmed up” constitutes 1 warm up cycle.

[Electronic Control Unit Connection Diagram]

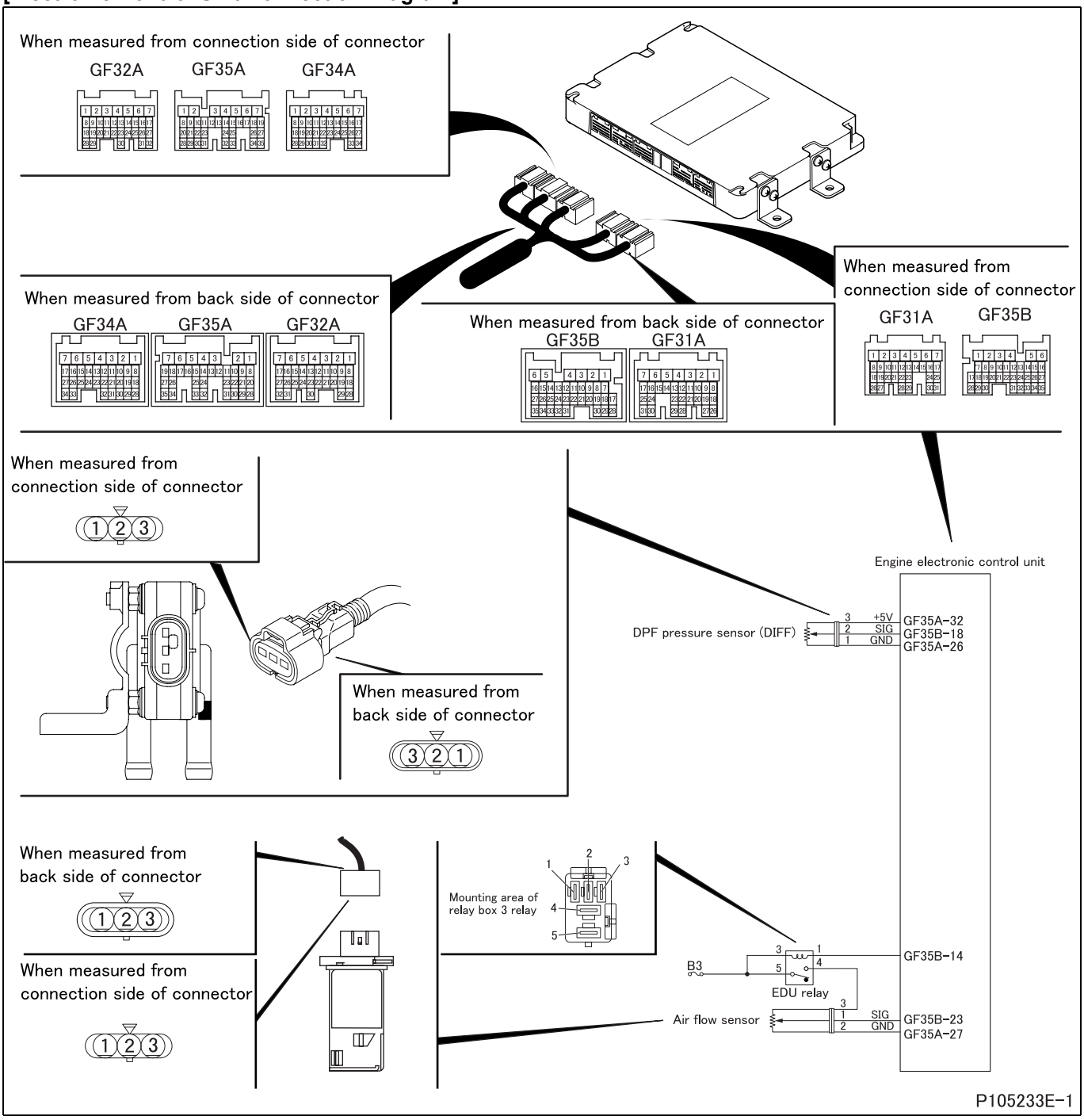

[Parts Identification and Location]

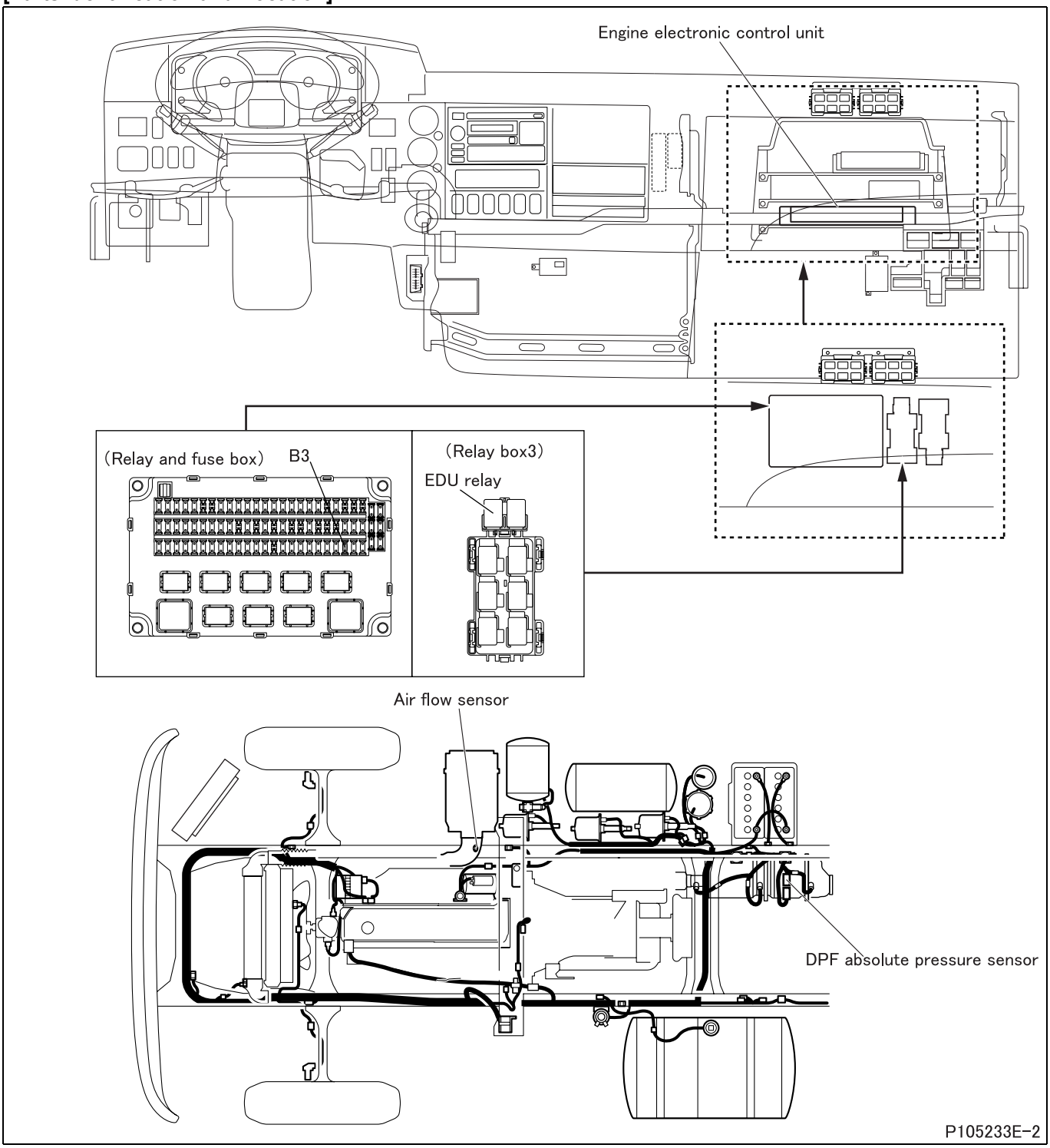

[Fault diagnosis]

Perform checks in the sequence of the following steps.

Step 1	Inspection items		Unit inspection of diesel particulate filter
	Maintenance item		Check the exhaust passage inside the diesel particulate filter for adhesion of soot in large quantity.
	Inspection condition		Remove diesel particulate filter.
	Requirements		No soot is deposited.
	Inspection result (Is the judging standard satisfied?)	YES	Go to step 2.
		NO	After replacement of ceramic filter, perform resetting the DPF-related information. (See Gr15.)

<Step 1 inspection diagram>

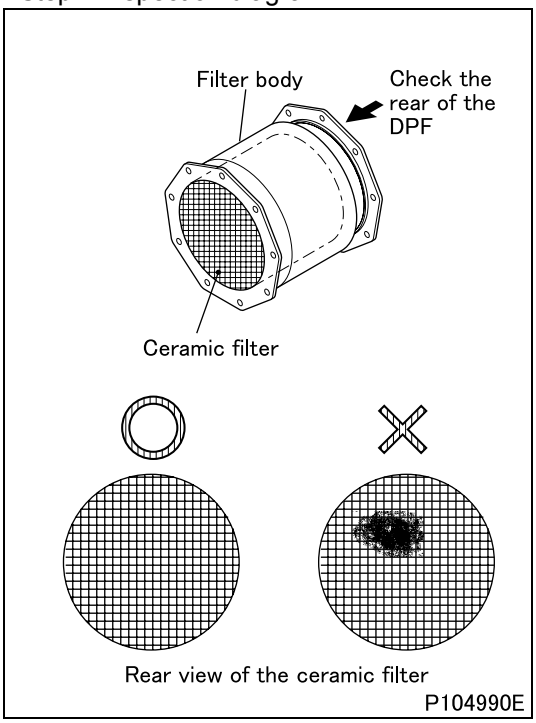

Step 2	Inspection items		Inspection of diesel particulate filter unit for clogging and cleaning of the diesel particulate filter unit (Perform completely.)
	Maintenance item		See Gr15 “Diesel Particulate Filter Unit Inspection for Clogging and Cleaning the Diesel Particulate Filter Unit”
	Inspection condition		Perform the following preparatory works. • Place the transmission in neutral. (place the automatic transmission in P range) • Turn the steering wheel in neutral position and securely apply the parking brake. • Turn off air conditioner not to increase the engine speed. • Check diagnosis code of each electronic control system. If any fault exists, rectify it. • Resetting the DPF-related information (perform “History reset” of Multi-Use Tester) (See Gr15 “Resetting the DPF-related information”.) • Warm up the engine until the engine coolant has been heated to more than 70°C {158°F}. (verify from Service Data “Engine Coolant Temperature” or “35: Water Temperature”)
	Requirements		This diagnosis code does not occur again.
	Inspection result (Is the judging standard satisfied?)	YES	End of inspection
		NO	Go to step 3.

Step 3	Inspection items		Inspection by control data
	Maintenance item		Measure item No. 93 “DPF Lamp” of Service Data.
	Inspection condition		Perform Multi-Use Tester actuator test item No. A8 “DPF Lamp”.
	Requirements		Diesel particulate filter indicator lamp illuminates (automatic reset after 15 seconds)
	Inspection result (Is the judging standard satisfied?)	YES	Go to step 4.
		NO	Replacement of engine electronic control unit

Step 4	Inspection items		Inspection by control data
	Maintenance item		Measure item No. 75 “DPF SW” of Service Data.
	Inspection condition		–
	Requirements		Press diesel particulate filter cleaning switch and check that “DPF SW” display switches from OFF to ON.
	Inspection result (Is the judging standard satisfied?)	YES	Go to step 5.
		NO	Replacement of diesel particulate filter cleaning switch or engine electronic control unit

Step 5	Inspection items		Inspection of pressure hose
	Maintenance item		Check pressure hose of DPF absolute pressure sensor and DPF pressure sensor (DIFF) for connection and cracks.
	Inspection condition		–
	Requirements		Nothing abnormal detected
	Inspection result (Is the judging standard satisfied?)	YES	Go to step 6.
		NO	After correction and replacement of hose, go to step 6.

Step 6	Inspection items		Inspection of DPF pressure sensor (DIFF)
	Maintenance item		Measure value of voltage between connector terminals No. 2 (+) and 1 (–).
	Inspection condition		• Apply voltage DC 5 V across terminals No. 3 (+) and 1 (–). • Gradually increase applied air pressure.
	Requirements		• 0 ± 3.5 kPa {0 ± 0.5 psi, 0 ± 0.04 kgf/cm^2}: 1 V • 100 ± 3.5 kPa {15 ± 0.5 psi, 1.02 ± 0.04 kgf/cm^2}: 4.5 V
	Inspection result (Is the judging standard satisfied?)	YES	Go to step 7.
		NO	Replacement of DPF pressure sensor (DIFF)

<Step 6 inspection diagram>

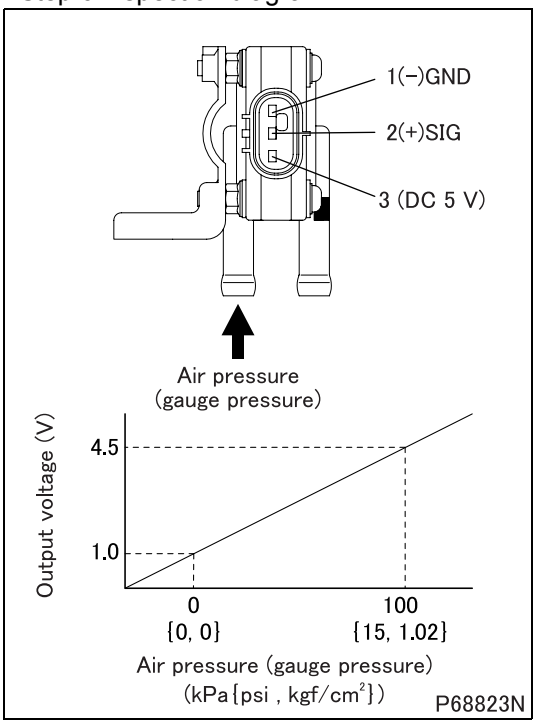

Step 7	Inspection items		Inspection of air flow sensor unit
	Maintenance item		Since inspection of single part is not easy, whether characteristics are deteriorated or not must be checked for the sensor mounted on the current vehicle by measuring and comparing the amount of sensor intake air of the sensor currently mounted on vehicle and that replaced with new one by the service data. **(1) Prepare for inspection** • Clean or replace air cleaner element. • Prepare a new air flow sensor. • Warm up the engine fully. **(2) Measure the intake air of current sensor** • Keep pressing the accelerator pedal until it bottom the stopper bolt from the idling state. (no load maximum rotation) • Measure the following items from among “Service data”. **<General Scanning Tool used>** • Engine speed: “Ne” (rpm) • Intake air flow rate: “Air Flow Rate from MAFS” (g/s) **<Multi-Use Tester used>** • Engine speed: 01 “Engine Revolution” (rpm) • Intake air flow rate: 3A “Air Flow Sensor Output” (g/hr) **(3) Measure the intake air of new sensor** • Replace the currently mounted sensor with a new sensor. • Keep pressing the accelerator pedal until it bottom the stopper bolt from the idling state. (no load maximum rotation) • Measure intake air flow at the same rpm as that of engine revolution in item (2) of “Service data”. **(4) Comparison whether characteristics are deteriorated** • Calculate the characteristics deterioration factor (%) by the following equation. • Characteristics deterioration factor (%) = (intake air of new item – current intake air) × 100/intake air of new item.
	Inspection condition		–
	Requirements		10% or less
	Inspection result (Is the judging standard satisfied?)	YES	Go to step 8.
		NO	Replacement of air flow sensor

Step 8	Inspection items		Inspection by control data
	Maintenance item		Perform actuator test item No. B9 “Fuel Leak Check”.
	Inspection condition		Engine start: At idle
	Requirements		There is no leak from injectors (six).
	Inspection result (Is the judging standard satisfied?)	YES	• Inspection of exhaust gas recirculation system (exhaust gas recirculation pipe, exhaust gas recirculation cooler, exhaust gas recirculation valve) • Inspection of engine
		NO	Replacement of injector

[Fault code]
Diagnosis code: P1435/Flash code: 92
[Monitor]
Diesel particulate filter broken
[Fault (outline)]
Efficiency below threshold (blocked diesel particulate filter)
[Diagnosis check]
- Pressure value calculated based on outputs from DPF pressure sensor (DIFF) is compared to that obtained from exhaust gas flow to judge clogged condition of diesel particulate filter.

[Code generation condition]
- Deviation remains lower than specified limits for approx. 10 seconds.
  (Warning lamp is lit and diagnosis code is displayed on second establishment of code generation condition.)

[Diagnosis check timing]
- When code generation condition is established after starter switch ON

[Diagnostic requirement]
- Air flow sensor: normal in output signal
- DPF temperature sensor 1: normal in output signal
- DPF pressure sensor (DIFF): normal in output signal
- DPF absolute pressure sensor: normal in output signall

[Control effected by electronic control unit during fault]
- Throttle control is stopped.
- Exhaust gas recirculation control is stopped.
- Injection quantity is limited.
- Diesel particulate filter regeneration is stopped.

[Probable cause of trouble]
- Abnormality of diesel particulate filter indicator lamp
- Abnormality of diesel particulate filter cleaning switch
- Manual diesel particulate filter regeneration is not performed.
- Excessive smoke emission (due to malfunction of engine proper, common rail or exhaust gas recirculation system)
- Abnormality of air flow sensor
- Abnormality of DPF absolute pressure sensor
- Abnormality of DPF pressure sensor (DIFF)
- Damage of ceramic filter

[Recoverability]
<Control during fault>
- Recovered if signal becomes normal with starter switch in ON position.

<Warning lamp>
- Extinguished at 4th driving cycle after normal signal is input.

<Fault code>
- Automatically cleared at 40th warm up cycle after warning lamp is extinguished.
  (To clear as desired, erase from the memory.)

Driving cycle : “Starter switch ON to start engine till starter switch OFF” constitutes 1 driving cycle.
Warm up cycle : “Starter switch ON to start engine till starter switch OFF after coolant temperature increased and engine warmed up” constitutes 1 warm up cycle.

[Electronic Control Unit Connection Diagram]

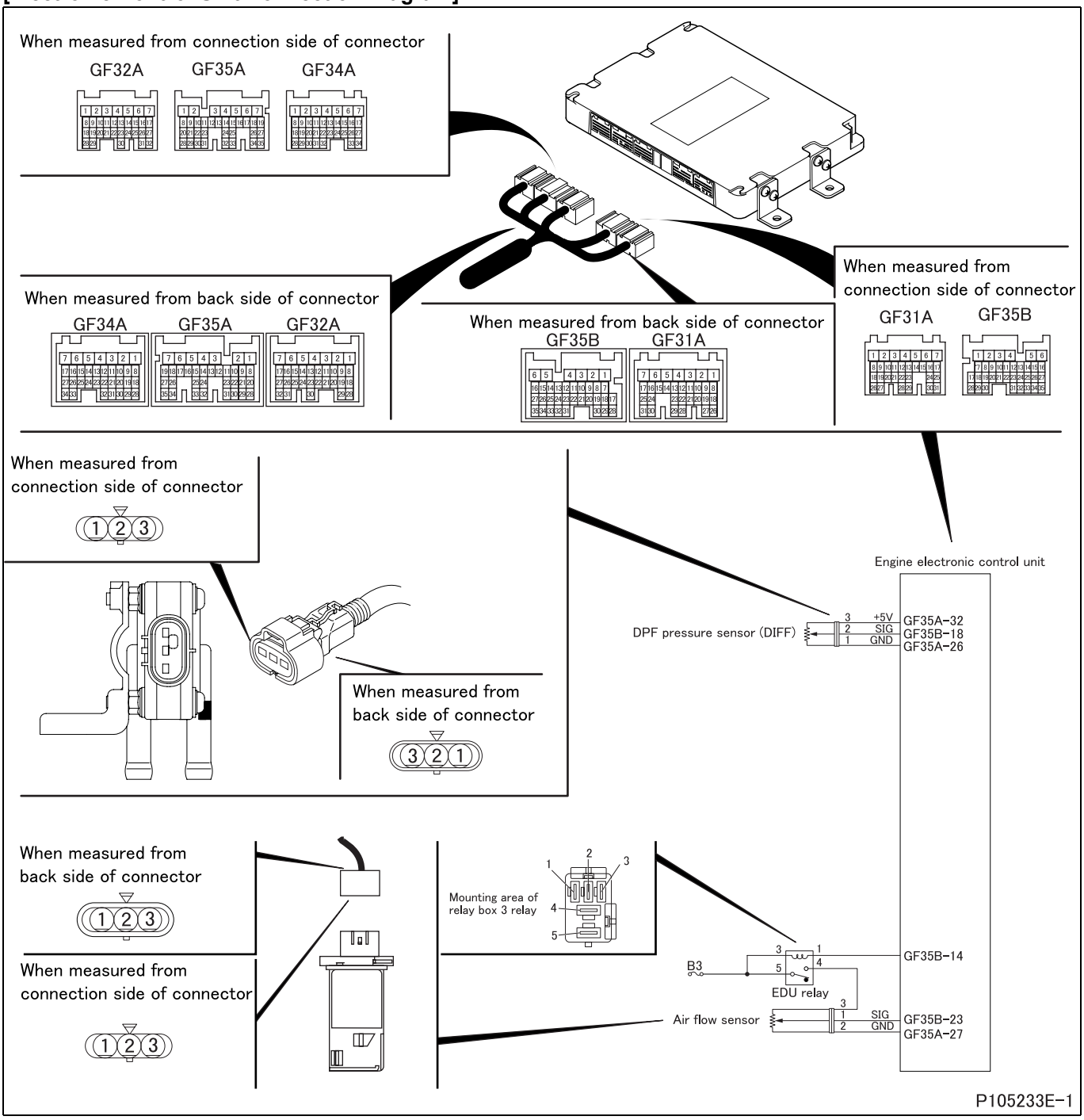

[Parts Identification and Location]

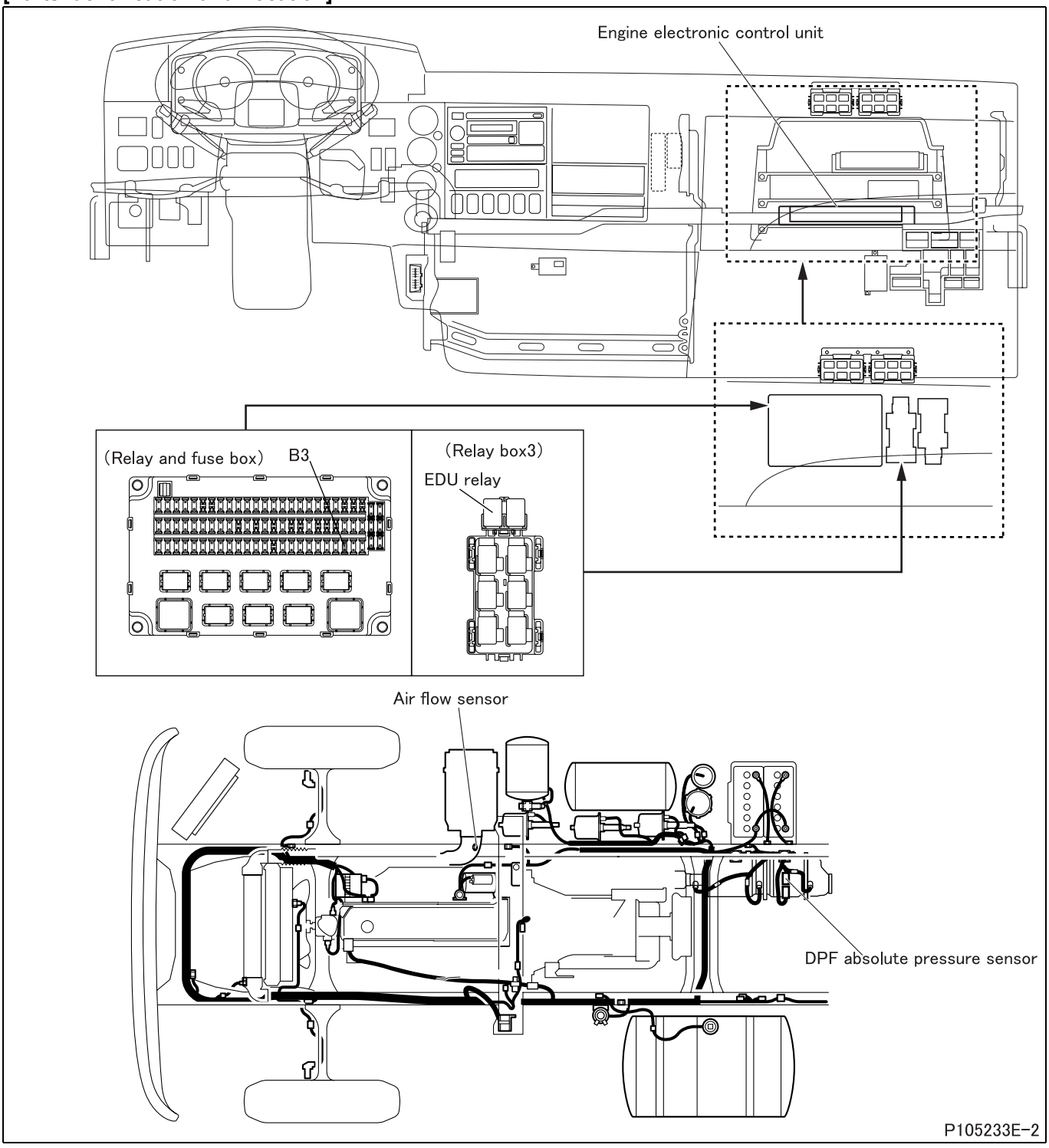

[Fault diagnosis]

Perform checks in the sequence of the following steps.

Step 1	Inspection items		Unit inspection of diesel particulate filter
	Maintenance item		Check the exhaust passage inside the diesel particulate filter for adhesion of soot in large quantity.
	Inspection condition		Remove diesel particulate filter.
	Requirements		No soot is deposited.
	Inspection result (Is the judging standard satisfied?)	YES	Go to step 2.
		NO	After replacement of ceramic filter, perform resetting the DPF-related information. (See Gr15.)

<Step 1 inspection diagram>

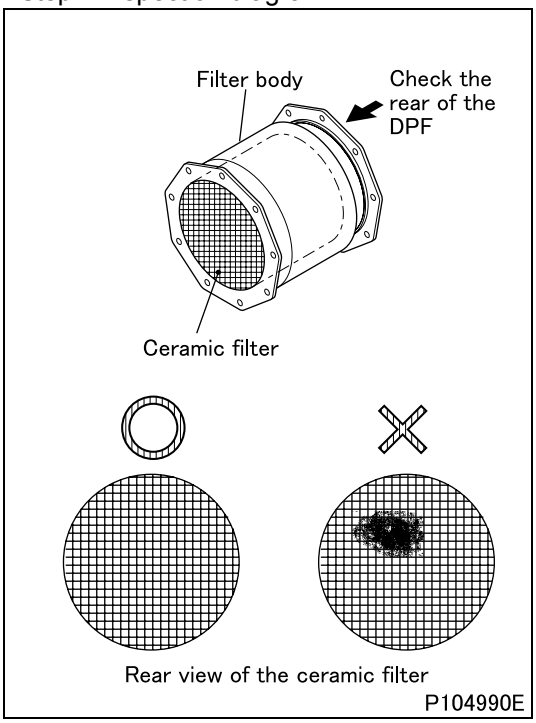

Step 2	Inspection items		Inspection of diesel particulate filter unit for clogging and cleaning of the diesel particulate filter unit (Perform completely.)
	Maintenance item		See Gr15 “Diesel Particulate Filter Unit Inspection for Clogging and Cleaning the Diesel Particulate Filter Unit”
	Inspection condition		Perform the following preparatory works. • Place the transmission in neutral. (place the automatic transmission in P range) • Turn the steering wheel in neutral position and securely apply the parking brake. • Turn off air conditioner not to increase the engine speed. • Check diagnosis code of each electronic control system. If any fault exists, rectify it. • Resetting the DPF-related information (perform “History reset” of Multi-Use Tester) (See Gr15 “Resetting the DPF-related information”.) • Warm up the engine until the engine coolant has been heated to more than 70°C {158°F}. (verify from Service Data “Engine Coolant Temperature” or “35: Water Temperature”)
	Requirements		This diagnosis code does not occur again.
	Inspection result (Is the judging standard satisfied?)	YES	End of inspection
		NO	Go to step 3.

Step 3	Inspection items		Inspection by control data
	Maintenance item		Measure item No. 93 “DPF Lamp” of Service Data.
	Inspection condition		Perform Multi-Use Tester actuator test item No. A8 “DPF Lamp”.
	Requirements		Diesel particulate filter indicator lamp illuminates (automatic reset after 15 seconds)
	Inspection result (Is the judging standard satisfied?)	YES	Go to step 4.
		NO	Replacement of engine electronic control unit

Step 4	Inspection items		Inspection by control data
	Maintenance item		Measure item No. 75 “DPF SW” of Service Data.
	Inspection condition		–
	Requirements		Press diesel particulate filter cleaning switch and check that “DPF SW” display switches from OFF to ON.
	Inspection result (Is the judging standard satisfied?)	YES	Go to step 5.
		NO	Replacement of diesel particulate filter cleaning switch or engine electronic control unit

Step 5	Inspection items		Inspection of pressure hose
	Maintenance item		Check pressure hose of DPF absolute pressure sensor and DPF pressure sensor (DIFF) for connection and cracks.
	Inspection condition		–
	Requirements		Nothing abnormal detected
	Inspection result (Is the judging standard satisfied?)	YES	Go to step 6.
		NO	After correction and replacement of hose, go to step 6.

Step 6	Inspection items		Inspection of DPF pressure sensor (DIFF)
	Maintenance item		Measure value of voltage between connector terminals No. 2 (+) and 1 (–).
	Inspection condition		• Apply voltage DC 5 V across terminals No. 3 (+) and 1 (–). • Gradually increase applied air pressure.
	Requirements		• 0 ± 3.5 kPa {0 ± 0.5 psi, 0 ± 0.04 kgf/cm^2}: 1 V • 100 ± 3.5 kPa {15 ± 0.5 psi, 1.02 ± 0.04 kgf/cm^2}: 4.5 V
	Inspection result (Is the judging standard satisfied?)	YES	Go to step 7.
		NO	Replacement of DPF pressure sensor (DIFF)

<Step 6 inspection diagram>

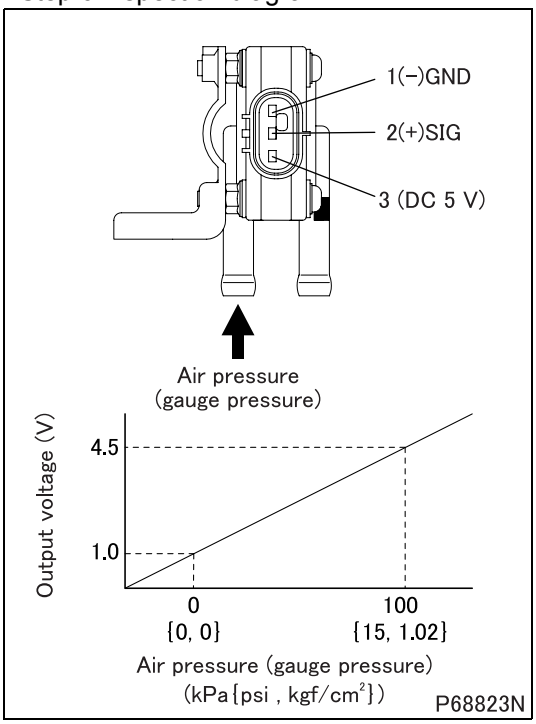

Step 7	Inspection items		Inspection of air flow sensor unit
	Maintenance item		Since inspection of single part is not easy, whether characteristics are deteriorated or not must be checked for the sensor mounted on the current vehicle by measuring and comparing the amount of sensor intake air of the sensor currently mounted on vehicle and that replaced with new one by the service data. **(1) Prepare for inspection** • Clean or replace air cleaner element. • Prepare a new air flow sensor. • Warm up the engine fully. **(2) Measure the intake air of current sensor** • Keep pressing the accelerator pedal until it bottom the stopper bolt from the idling state. (no load maximum rotation) • Measure the following items from among “Service data”. **<General Scanning Tool used>** • Engine speed: “Ne” (rpm) • Intake air flow rate: “Air Flow Rate from MAFS” (g/s) **<Multi-Use Tester used>** • Engine speed: 01 “Engine Revolution” (rpm) • Intake air flow rate: 3A “Air Flow Sensor Output” (g/hr) **(3) Measure the intake air of new sensor** • Replace the currently mounted sensor with a new sensor. • Keep pressing the accelerator pedal until it bottom the stopper bolt from the idling state. (no load maximum rotation) • Measure intake air flow at the same rpm as that of engine revolution in item (2) of “Service data”. **(4) Comparison whether characteristics are deteriorated** • Calculate the characteristics deterioration factor (%) by the following equation. • Characteristics deterioration factor (%) = (intake air of new item – current intake air) × 100/intake air of new item.
	Inspection condition		–
	Requirements		10% or less
	Inspection result (Is the judging standard satisfied?)	YES	Go to step 8.
		NO	Replacement of air flow sensor

Step 8	Inspection items		Inspection by control data
	Maintenance item		Perform actuator test item No. B9 “Fuel Leak Check”.
	Inspection condition		Engine start: At idle
	Requirements		There is no leak from injectors (six).
	Inspection result (Is the judging standard satisfied?)	YES	• Inspection of exhaust gas recirculation system (exhaust gas recirculation pipe, exhaust gas recirculation cooler, exhaust gas recirculation valve) • Inspection of engine
		NO	Replacement of injector

[Fault code]
Diagnosis code: P1442/Flash code: 92
[Monitor]
Failure of automatic diesel particulate filter regeneration
[Fault (outline)]
Improperly performed automatic regeneration of diesel particulate filter
[Diagnosis check]
- Automatic regeneration is diagnosed as abnormal based on frequency of occurrence of diagnosis codes related to automatic DPF regeneration (P1412 to P1415).

[Code generation condition]
- Diagnose code (P1412 to P1415) occurs the specified number of times.
  (Warning lamp is lit and diagnosis code is displayed on first establishment of code generation condition.)

[Diagnosis check timing]
- When code generation condition is established after starter switch ON

[Diagnostic requirement]
- 2 seconds passed after starter switch ON
- 2 seconds passed after cranking
- Battery voltage: normal

[Control effected by electronic control unit during fault]
- Automatic diesel particulate filter regeneration is stopped.

[Probable cause of trouble]
- When any other diagnosis code is displayed, inspect for abnormality in engine control first because the code is caused by that problem.
- Engine oil level abnormal
- Abnormality of air tube
- Abnormality of exhaust shutter driving hose
- Abnormality of reducing valve
- Abnormality of exhaust shutter
- Abnormality of air flow sensor
- Diesel particulate filter unit (clogged)

[Recoverability]
<Control during fault>
- Recovered if manual diesel particulate filter regeneration normally ends.

<Fault code>
- To erase, execute Memory Clear.

[Fault code]
Diagnosis code: P1443/Flash code: 92
[Monitor]
Failure of manual diesel particulate filter regeneration (long-lasting abnormality)
[Fault (outline)]
Failed manual diesel particulate filter regeneration
[Diagnosis check]
- Manual regeneration is diagnosed as abnormal based on frequency of occurrence of diagnosis codes related to manual DPF regeneration (P1412 to P1415) or time taken for manual regeneration.

[Code generation condition]
- Failure of manual diesel particulate filter regeneration (diagnosis codes (P1416 to P1418) occur) or manual regenaration lasts for 60 minutes.
  (Warning lamp is lit and diagnosis code is displayed on first establishment of code generation condition.)

NOTE
- **P1433 occurs simultaneously with P1416 to P1418.**

[Diagnosis check timing]
- When code generation condition is established after starter switch ON

[Diagnostic requirement]
- 2 seconds passed after starter switch ON
- 2 seconds passed after cranking
- Battery voltage: normal

[Control effected by electronic control unit during fault]
- Injection quantity is limited.
- Exhaust gas recirculation control is stopped.
- Throttle control is stopped.
- Diesel particulate filter regeneration (manual or automatic) is stopped.

[Probable cause of trouble]
- When any other diagnosis code is displayed, inspect for abnormality in engine control first because the code is caused by that problem.
- Abnormality of engine oil level
- Abnormality of air tube
- Abnormality of exhaust shutter driving hose
- Abnormality of reducing valve
- Abnormality of exhaust shutter
- Abnormality of air flow sensor
- Diesel particulate filter unit (clogged)

[Recoverability]
<Control during fault>
- Recovered if signal becomes normal with starter switch in ON position.

NOTE
- **Recovery from a fault of this code requires “Resetting the DPF-related information”; troubleshooting steps on the following pages, therefore, must be completely performed.**

<Warning lamp>
- Extinguished after input of normal signal.

<Fault code>
- If code recovered to normal, automatically cleared at 40th warm up cycle after warning lamp is lit.
  (To clear as desired, erase from the memory.)

Warm up cycle : “Starter switch ON to start engine till starter switch OFF after coolant temperature increased and engine warmed up” constitutes 1 warm up cycle.

[Fault code]
Diagnosis code: P1445/Flash code: 92
[Monitor]
Time required for automatic diesel particulate filter regeneration
[Fault (outline)]
Time-out error
[Diagnosis check]
- Total time of automatic diesel particulate filter regeneration is monitored.

[Code generation condition]
- Automatic diesel particulate filter regeneration continues beyond given time.
  (Diagnosis codes P1445 and P1446 occur simultaneously.)
  (Warning lamp is lit and diagnosis code is displayed on first establishment of code generation condition.)

[Diagnosis check timing]
- When code generation condition is established after starter switch ON

[Diagnostic requirement]
- 2 seconds passed after starter switch ON
- 2 seconds passed after cranking
- Battery voltage: normal

[Control effected by electronic control unit during fault]
- Automatic diesel particulate filter regeneration is stopped.

[Probable cause of trouble]
- When any other diagnosis code is displayed, inspect for abnormality in engine control first because the code is caused by that problem.
- Abnormality of engine oil level
- Abnormality of air tube
- Abnormality of exhaust shutter driving hose
- Abnormality of reducing valve
- Abnormality of exhaust shutter
- Abnormality of air flow sensor
- Diesel particulate filter unit (clogged)

[Recoverability]
<Control during fault>
- Recovered if manual diesel particulate filter regeneration normally ends.

<Fault code>
- To erase, execute Memory Clear.

[Fault code]
Diagnosis code: P1446/Flash code: 92
[Monitor]
Time required for automatic diesel particulate filter regeneration
[Fault (outline)]
Abnormal number of time-out error occurrences
[Diagnosis check]
- Duration of automatic diesel particulate filter regeneration is monitored.

[Code generation condition]
- Automatic diesel particulate filter regeneration continues beyond given time.
  (Diagnosis codes P1445 and P1446 occur simultaneously.)
  (Warning lamp is lit and diagnosis code is displayed on first establishment of code generation condition.)

[Diagnosis check timing]
- When code generation condition is established after starter switch ON

[Diagnostic requirement]
- 2 seconds passed after starter switch ON
- 2 seconds passed after cranking
- Battery voltage: normal

[Control effected by electronic control unit during fault]
- Automatic diesel particulate filter regeneration is stopped.

[Probable cause of trouble]
- When any other diagnosis code is displayed, inspect for abnormality in engine control first because the code is caused by that problem.
- Abnormality of engine oil level
- Abnormality of air tube
- Abnormality of exhaust shutter driving hose
- Abnormality of reducing valve
- Abnormality of exhaust shutter
- Abnormality of air flow sensor
- Diesel particulate filter unit (clogged)

[Recoverability]
<Control during fault>
- Recovered if manual diesel particulate filter regeneration normally ends.

<Fault code>
- To erase, execute Memory Clear.

[Fault code]
Diagnosis code: P1464/Flash code: 55
[Monitor]
Exhaust brake blocking
[Fault (outline)]
Abnormality of exhaust brake opening
[Diagnosis check]
- Exhaust shutter valve opening is monitored during automatic diesel particulate filter regeneration.
  (Fault is detected for diagnosis code only with vehicle stop during automatic diesel particulate filter regeneration)

[Code generation condition]
Exhaust brake opening is determined to be abnormal if either of the following conditions is met while DPF is being automatically regenerated and exhaust shutter being used.
- Abnormally much fuel is injected.
- Engine idling speed drops.
  (Warning lamp is lit and diagnosis code is displayed on first establishment of code generation condition.)

[Diagnosis check timing]
- When code generation condition is established after starter switch ON

[Diagnostic requirement]
- 2 seconds passed after starter switch ON
- 2 seconds passed after cranking
- Battery voltage: normal

[Control effected by electronic control unit during fault]
- Automatic diesel particulate filter regeneration is stopped.

[Probable cause of trouble]
- Abnormality of exhaust shutter

[Recoverability]
<Control during fault>
- Recovered if signal becomes normal when starter switch is turned OFF to ON (power supply resumed to electronic control unit).

<Fault code>
- To erase, execute Memory Clear.

[Electronic Control Unit Connection Diagram]

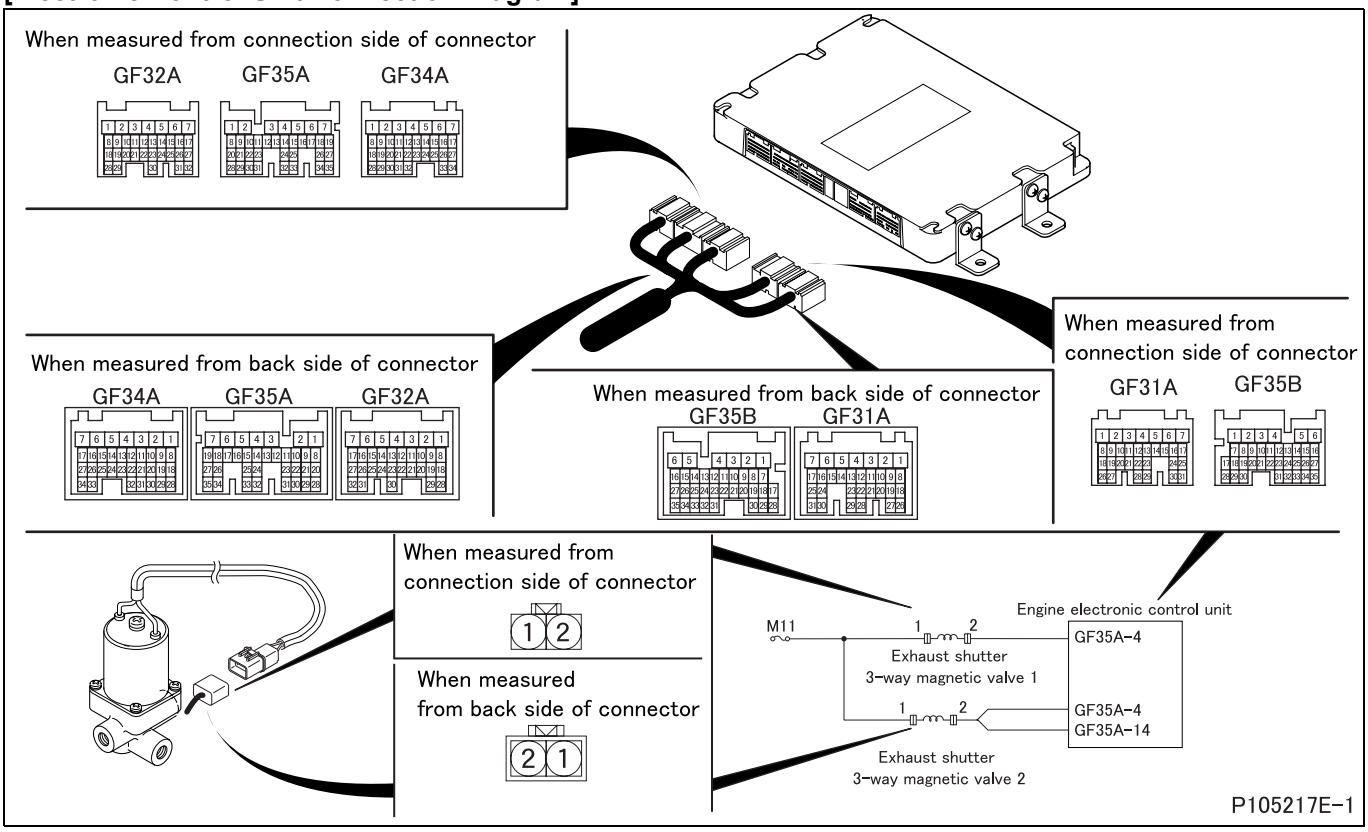

[Parts Identification and Location]

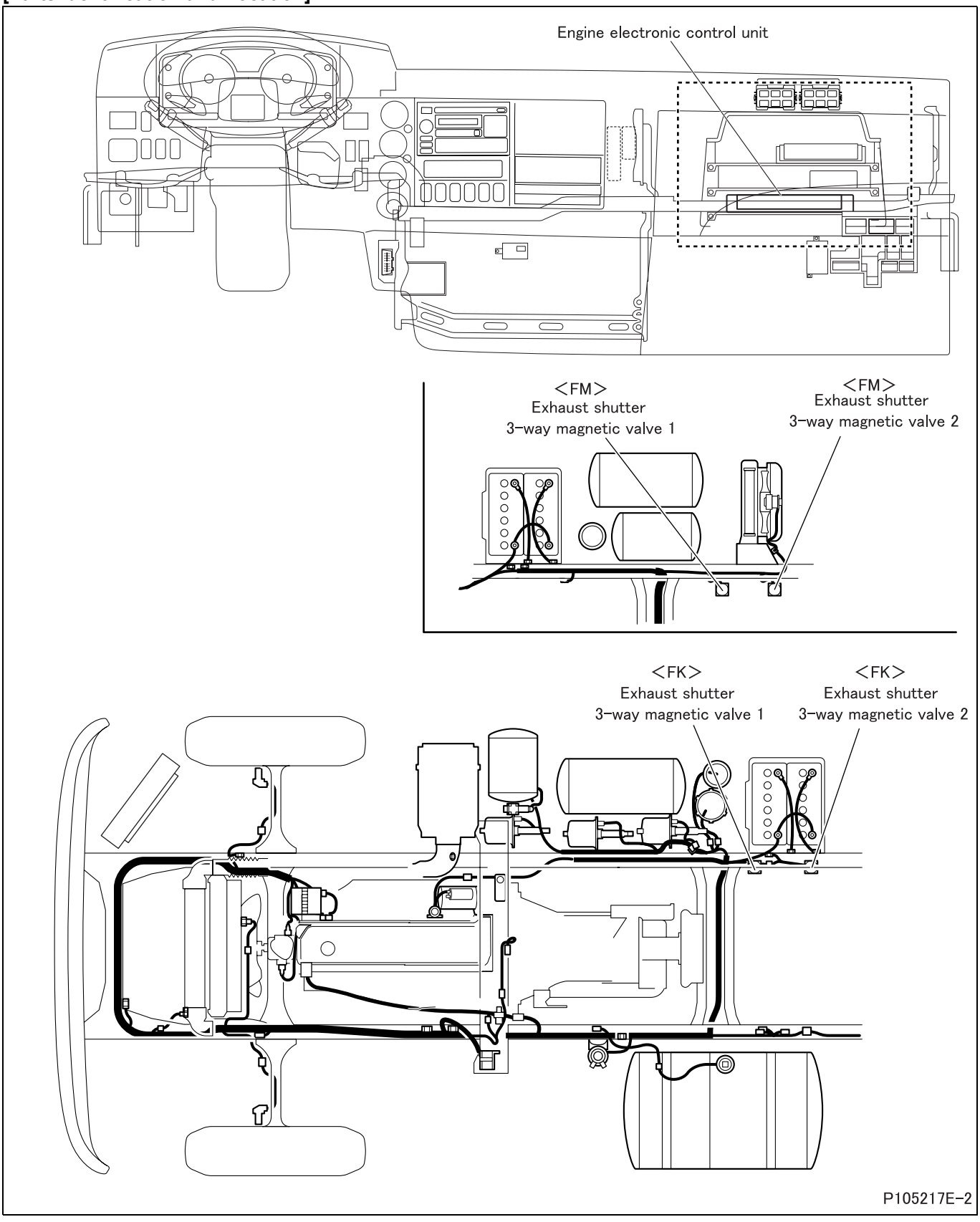

[Fault diagnosis]

- Perform checks in the sequence of the following steps.

Step 1	Inspection items		Inspection by control data (Perform "■ **Inspection: Butterfly valve-to-body clearance**" before starting this inspection step. (See Gr15.))
	Maintenance item		Perform following actuator test item. • 3-Way M/V 1: No. AC "Auxiliary Brake M/V 1" • 3-Way M/V 2: No. AB "Exhaust Brake M/V1 + M/V2"
	Inspection condition		Starter switch: ON
	Requirements		3-way magnetic valve operation sound is noted (automatically reset after 6 seconds), or ON/OFF switching of Service Data: item No. 87 "Auxiliary Brake M/V1", No. 88 "Exhaust M/V" is effected.
	Inspection result (Is the judging standard satisfied?)	YES	Go to transient fault (See Gr00.).
		NO	Go to step 2.

Step 2	Inspection items		Inspection of electronic control unit connector
	Maintenance item		Inspection of connector
	Inspection condition		–
	Requirements		• Connector is properly connected. • No trace of water entry is found. • No corrosion is found in terminal. • Connection to terminal is appropriate.
	Inspection result (Is the judging standard satisfied?)	YES	Go to step 3.
		NO	Modify connector.

Step 3	Inspection items		Inspection of 3-way magnetic valve connector
	Maintenance item		Inspection of connector
	Inspection condition		–
	Requirements		• Connector is properly connected. • No trace of water entry is found. • No corrosion is found in terminal. • Connection to terminal is appropriate.
	Inspection result (Is the judging standard satisfied?)	YES	Go to step 4.
		NO	Modify connector.

Step 4	Inspection items		Inspection of 3-way magnetic valve unit
	Maintenance item		Measure minimum operating voltage when 3-way magnetic valve operates (judge by operation sound).
	Inspection condition		Gradually increase from zero the voltage applied to terminals No. 1 (+) and 2 (–).
	Requirements		10 V or less
	Inspection result (Is the judging standard satisfied?)	YES	Go to step 5.
		NO	Replacement of 3-way magnetic valve

<Step 4 inspection diagram>

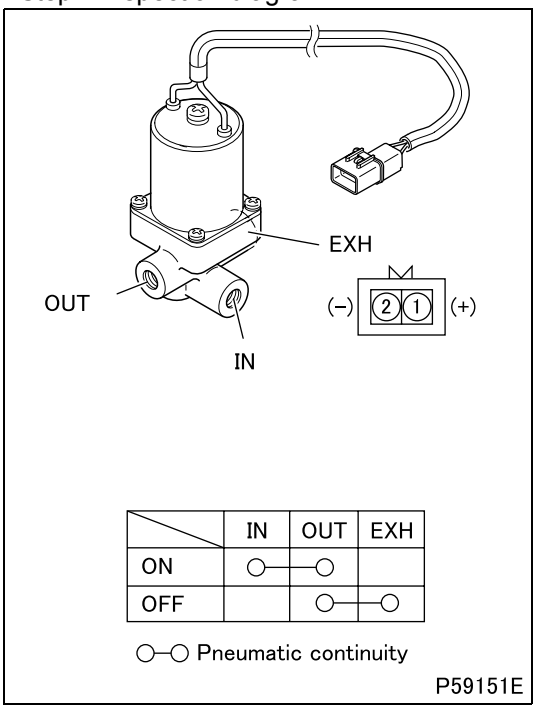

Step 5	Inspection items		Inspection of harness between 3-way magnetic valve and electronic control unit (ground)
	Maintenance item		Check circuit between following connector terminals. • 3-way magnetic valve 1: 3-way magnetic valve 1 connector terminal No. 2 and electronic control unit connector (GF35B) terminal No. 13. • 3-way magnetic valve 2: 3-way magnetic valve 2 connector terminal No. 2 and electronic control unit connector (GF35A) terminal No. 4 or 14.
	Inspection condition		Disconnect electronic control unit from harness and measure from connection side of harness connector.
	Requirements		There is continuity.
	Inspection result (Is the judging standard satisfied?)	YES	Go to step 6.
		NO	Modify harness.

Step 6	Inspection items		Inspection of harness between 3-way magnetic valve and fuse (power supply)
	Maintenance item		Check circuit between following connector terminals. • 3-way magnetic valve 1: 3-way magnetic valve 1 connector terminal No. 1 and fuse (M11) • 3-way magnetic valve 2: 3-way magnetic valve 2 connector terminal No. 1 and fuse (M11)
	Inspection condition		Disconnect electronic control unit from harness and measure from connection side of harness connector.
	Requirements		There is continuity.
	Inspection result (Is the judging standard satisfied?)	YES	Go to step 7.
		NO	Modify harness.

Step 7	Inspection items		Inspection by control data
	Maintenance item		Perform following actuator test item. • 3-Way M/V 1: No. AC “Auxiliary Brake M/V 1” • 3-Way M/V 2: No. AB “Exhaust Brake M/V1 + M/V2”
	Inspection condition		Starter switch: ON
	Requirements		3-way magnetic valve operation sound is noted (automatically reset after 6 seconds), or ON/OFF switching of Service Data: item No. 87 “Auxiliary Brake M/V 1”, No. 88 “Exhaust M/V” is effected.
	Inspection result (Is the judging standard satisfied?)	YES	Replacement of exhaust shutter valve
		NO	Replacement of electronic control unit

[Fault code]
Diagnosis code: P1474/Flash code: 92
[Monitor]
Diesel particulate filter broken
[Fault (outline)]
Excessive Delta Pressure
[Diagnosis check]
- Pressure difference between before and after ceramic filter is monitored by DPF pressure sensor (DIFF) for clogging of ceramic filter.

[Code generation condition]
- Pressure difference between before and after ceramic filter remains under –30 kPa {–4 psi, –0.3 kgf/cm^2} for approx. 10 seconds.
  (Warning lamp is lit and diagnosis code is displayed on first establishment of code generation condition.)

[Diagnosis check timing]
- When code generation condition is established after starter switch ON

[Diagnostic requirement]
- 2 seconds passed after starter switch ON
- 2 seconds passed after cranking
- Battery voltage: normal
- Engine in operation

[Control effected by electronic control unit during fault]
- Injection quantity is limited.
- Exhaust gas recirculation control is stopped.
- Throttle control is stopped.
- Diesel particulate filter regeneration (manual or automatic) is stopped.

[Probable cause of trouble]
- Abnormality of diesel particulate filter indicator lamp
- Abnormality of diesel particulate filter cleaning switch
- Manual diesel particulate filter regeneration is not performed.
- Excessive smoke emission (due to malfunction of engine proper, common rail or exhaust gas recirculation system)
- Abnormality of air flow sensor
- Abnormality of DPF absolute pressure sensor
- Abnormality of DPF pressure sensor (DIFF)
- Abnormality of diesel particulate filter

[Recoverability]
<Control during fault>
- Recovered if signal becomes normal with starter switch in ON position.

<Warning lamp>
- Extinguished after input of normal signal.

<Fault code>
- If code recovered to normal, automatically cleared at 40th warm up cycle after warning lamp is lit.
  (To clear as desired, erase from the memory.)

Warm up cycle : “Starter switch ON to start engine till starter switch OFF after coolant temperature increased and engine warmed up” constitutes 1 warm up cycle.

[Fault diagnosis]

- Perform checks in the sequence of the following steps.

Step 1	Inspection items		Inspection by control data
	Maintenance item		Check if following diagnosis codes occur simultaneously. • P0101 Airflow Sensor (Plausibility) • P0102 Airflow Sensor (Low) • P0103 Airflow Sensor (High) • P0427 EXH Gas Temp SNSR1 (Low) • P0428 EXH Gas Temp SNSR1 (High) • P0545 DPF Temp SNSR (upstream) Low • P0546 DPF Temp SNSR (upstream) High • P1660 DPF Lamp Control Circuit (Low) • P1661 DPF Lamp Control Circuit (High) • P2032 Exhaust Gas Temp (Low) • P2033 Exhaust Gas Temp (High) • P2453 DPF Diff SNSR (Plausi) & MFF • P2454 DPF Diff SNSR (Low) & MFF • P2455 DPF Diff SNSR (High) & MFF
	Inspection condition		Ensure that each sensor mounting condition is free of abnormalities.
	Requirements		Codes occur.
	Inspection result (Is the judging standard satisfied?)	YES	After inspection of diagnosis code that is occurring, go to step 2.
		NO	Go to step 2.

Step 2	Inspection items		Inspection of DPF pressure sensor (DIFF)
	Maintenance item		Measure value of voltage between connector terminals No. 2 (+) and 1 (–).
	Inspection condition		• Apply voltage DC 5 V across terminals No. 3 (+) and 1 (–). • Gradually increase applied air pressure.
	Requirements		• 0 ± 3.5 kPa {0 ± 0.5 psi, 0 ± 0.04 kgf/cm^2}: 1 V • 100 ± 3.5 kPa {15 ± 0.5 psi, 1.02 ± 0.04 kgf/cm^2}: 4.5 V
	Inspection result (Is the judging standard satisfied?)	YES	Go to step 3.
		NO	Replacement of DPF pressure sensor (DIFF)

<Step 2 inspection diagram>

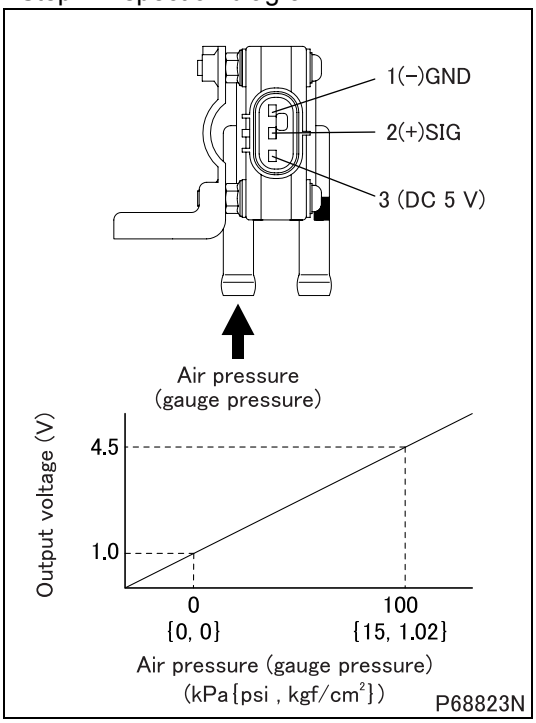

Step 3	Inspection items		Inspection of oil level
	Maintenance item		Inspection of engine oil level
	Inspection condition		Engine is stopped.
	Requirements		Oil level for inspection is not exceeded.
	Inspection result (Is the judging standard satisfied?)	YES	Go to step 4.
		NO	After replacement of oil, go to step 4.

<Step 3 inspection diagram>

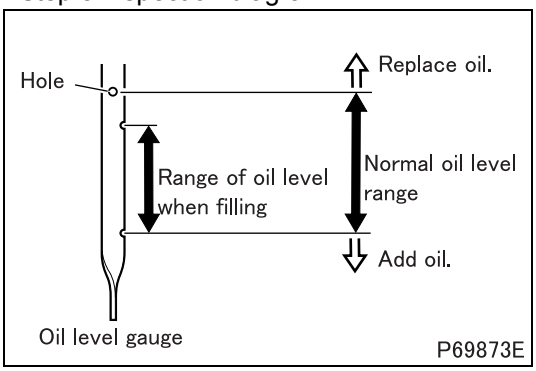

Step 4	Inspection items		Inspection of pressure hose
	Maintenance item		Check pressure hose of DPF absolute pressure sensor and DPF pressure sensor (DIFF) for connection and cracks.
	Inspection condition		–
	Requirements		Nothing abnormal detected
	Inspection result (Is the judging standard satisfied?)	YES	Go to step 4.
		NO	Correction and replacement of hose

Step 5	Inspection items		Unit inspection of diesel particulate filter
	Maintenance item		Check the exhaust passage inside the diesel particulate filter for adhesion of soot in large quantity.
	Inspection condition		Remove diesel particulate filter.
	Requirements		No soot is deposited.
	Inspection result (Is the judging standard satisfied?)	YES	Go to step 6.
		NO	After replacement of ceramic filter, perform resetting the DPF-related information and go to step 7.

<Step 5 inspection diagram>

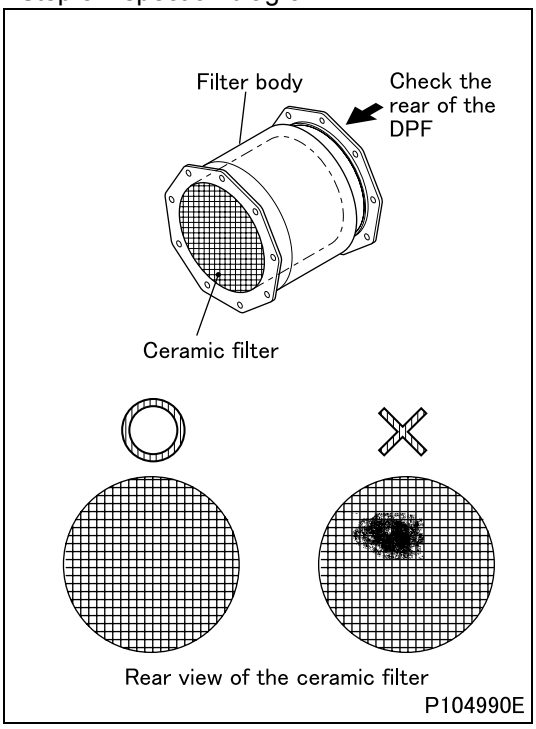

Step 6	Inspection items		Inspection of diesel particulate filter unit for clogging and cleaning of the diesel particulate filter unit
	Maintenance item		See Gr15 “Diesel Particulate Filter Unit Inspection for Clogging and Cleaning the Diesel Particulate Filter Unit”.
	Inspection condition		Perform following preparatory works. • Place the transmission in neutral. (place the automatic transmission in P range) • Turn the steering wheel in neutral position and securely apply the parking brake. • Turn off air conditioner not to increase the engine speed. • Check diagnosis code of each electronic control system. If any fault exists, rectify it. • Resetting the DPF-related information (perform “History reset” of Multi-Use Tester) (See Gr15 “Resetting the DPF-related information”.) • Warm up the engine until the engine coolant has been heated to more than 70°C {158°F}. (verify from Service Data “Engine Coolant Temperature” or “35: Water Temperature”)
	Requirements		This diagnosis code does not occur again.
	Inspection result (Is the judging standard satisfied?)	YES	Go to step 7.
		NO	After replacement of electronic control unit, go to step 7

Step 7	Inspection items		Inspection of exhaust gas
	Maintenance item		Check of exhaust gas (Check whether abnormalities related to engine cause early clogging of diesel particulate filter and adhesion of soot in large quantity in outlet body of diesel particulate filter.)
	Inspection condition		Remove diesel particulate filter, each sensor, pipe and hose.
	Requirements		Exhaust gas is apparently white or black when engine is raced.
	Inspection result (Is the judging standard satisfied?)	YES	Inspect following places. • Common rail system • Exhaust gas recirculation system • Intake throttle control • Exhaust shutter • Air cleaner • Turbocharger • Boost pressure • Compression Pressure
		NO	End of inspection (Be sure to erase diagnosis codes after the end of inspection as engine warning lamp may illuminate by diagnostic function when sensors installed on diesel particulate filter are removed.)

[Fault code]
Diagnosis code: P1632/Flash code: 95
[Monitor]
Abnormality in controller area network 2 communication (exhaust gas recirculation electronic drive unit 1)
[Fault (outline)]
Message timeout
[Diagnosis check]
- Controller area network communication between engine electronic control unit and exhaust gas recirculation electronic drive unit 1 is monitored for abnormality.

[Code generation condition]
- No controller area network signals from exhaust gas recirculation electronic drive unit 1 are received for more than 6 seconds.
  (Warning lamp is lit and diagnosis code is displayed on first establishment of code generation condition.)

[Diagnosis check timing]
- When code generation condition is established after starter switch ON

[Diagnostic requirement]
- 2 seconds passed after starter switch ON
- 2 seconds passed after cranking
- Battery voltage: normal
- Controller area network 2 communication in order

[Control effected by electronic control unit during fault]
- Injection quantity is limited.
- Exhaust gas recirculation control is stopped.
- Throttle control is stopped.
- Diesel particulate filter regeneration (manual or automatic) is stopped.

[Probable cause of trouble]
- Open-circuit or short-circuit of harness between engine electronic control unit and exhaust gas recirculation electronic drive unit 1
- Abnormality of each connector
- Abnormality of engine electronic control unit
- Abnormality of exhaust gas recirculation electronic drive unit 1
- Abnormality of controller area network resistor

[Recoverability]
<Control during fault>
- Recovered if signal becomes normal with starter switch in ON position.

<Warning lamp>
- Extinguished at 4th driving cycle after normal signal is input.

<Fault code>
- Automatically cleared at 40th warm up cycle after warning lamp is extinguished.
  (To clear as desired, erase from the memory.)

Driving cycle : “Starter switch ON to start engine till starter switch OFF” constitutes 1 driving cycle.
Warm up cycle : “Starter switch ON to start engine till starter switch OFF after coolant temperature increased and engine warmed up” constitutes 1 warm up cycle.

[Electronic Control Unit Connection Diagram]

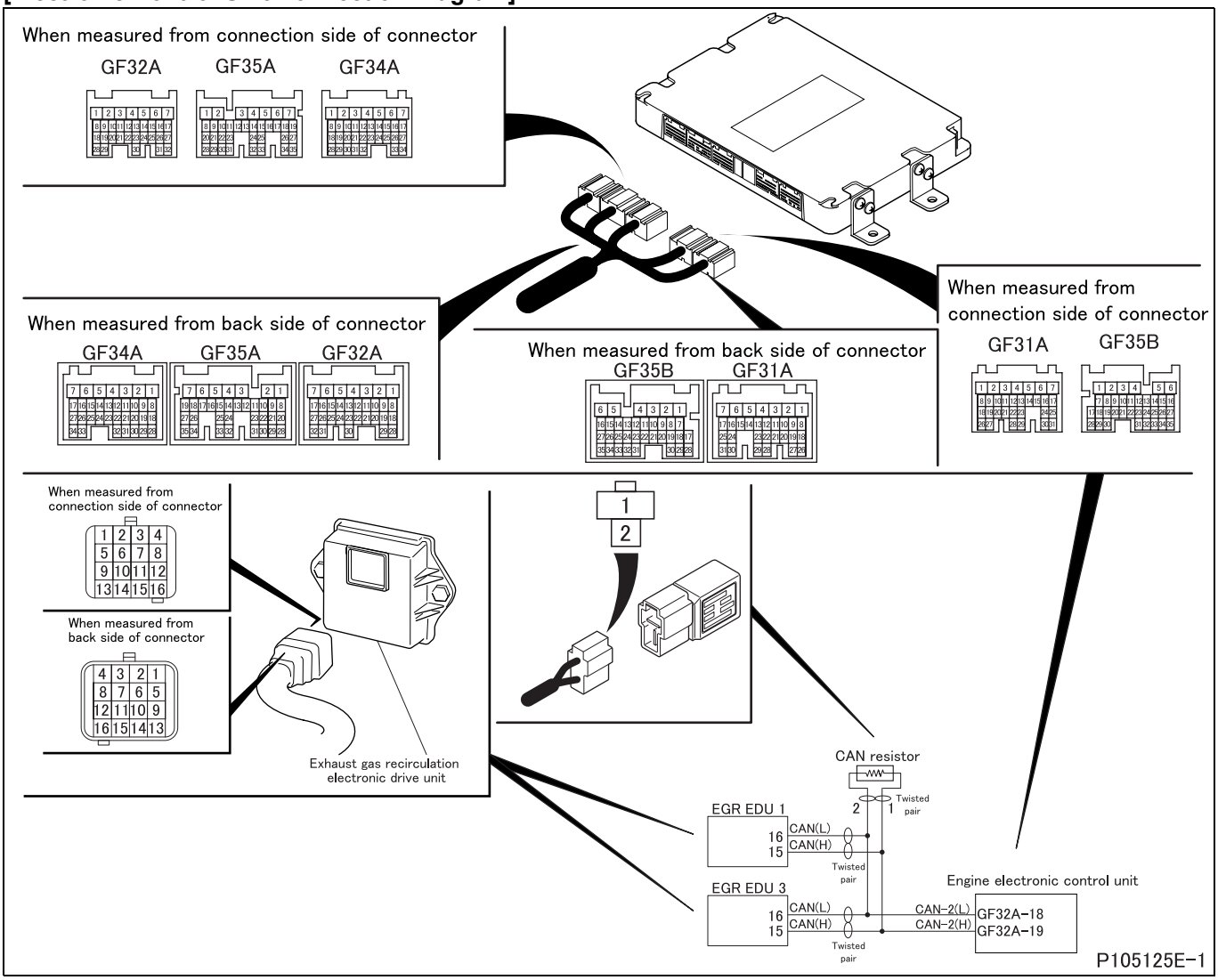

[Parts Identification and Location]

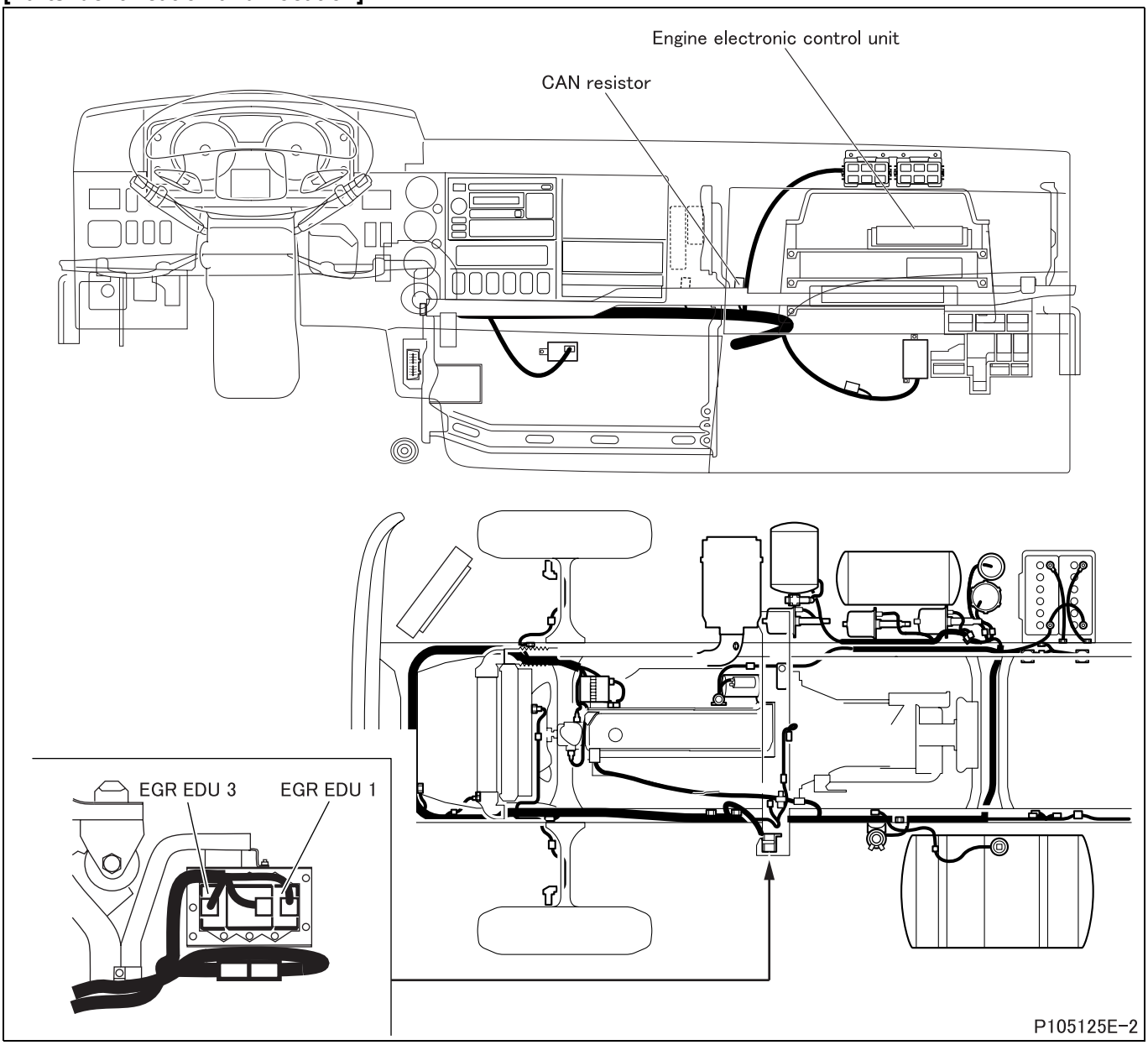

[Fault diagnosis]

- Perform checks in the sequence of the following steps.

Step 1	Inspection items		Inspection by engine electronic control unit connector
	Maintenance item		Measure value of resistance between engine electronic control unit connector (GF32A) terminals No. 18 and 19.
	Inspection condition		Disconnect each device from harness and measure from connection side of harness connector.
	Requirements		120 ± 6 Ω
	Inspection result (Is the judging standard satisfied?)	YES	Go to step 7.
		NO	Go to step 2.

Step 2	Inspection items		Inspection of controller area network resistor connector
	Maintenance item		Inspection of connector
	Inspection condition		–
	Requirements		• Connector is properly connected. • No trace of water entry is found. • No corrosion is found in terminal. • Connection to terminal is appropriate.
	Inspection result (Is the judging standard satisfied?)	YES	Go to step 3.
		NO	Modify connector.

Step 3	Inspection items		Inspection of controller area network resistor unit
	Maintenance item		Measure value of resistance between connector terminals No. 1 and 2.
	Inspection condition		Disconnect connector and measure resistor side.
	Requirements		120 ± 6 Ω
	Inspection result (Is the judging standard satisfied?)	YES	Go to step 4.
		NO	Replacement of controller area network resistor

<Step 3 inspection diagram>

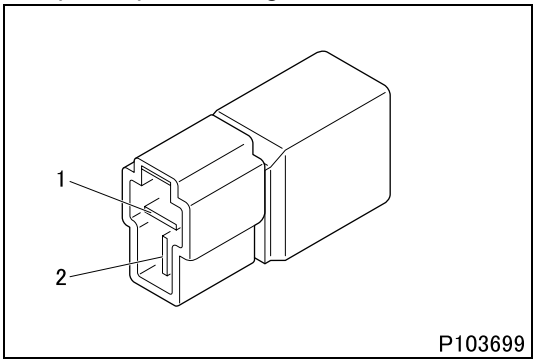

Step 4	Inspection items		Inspection of harness between engine electronic control unit and controller area network resistor (HIGH)
	Maintenance item		Check circuit between controller area network resistor connector terminal No. 1 and engine electronic control unit connector (GF32A) terminal No. 19
	Inspection condition		Disconnect each device from harness and measure from connection side of harness connector.
	Requirements		There is continuity.
	Inspection result (Is the judging standard satisfied?)	YES	Go to step 5.
		NO	Modify harness.

Step 5	Inspection items		Inspection of harness between engine electronic control unit and controller area network resistor (LOW)
	Maintenance item		Check circuit between controller area network resistor connector terminal No. 2 and engine electronic control unit connector (GF32A) terminal No. 18
	Inspection condition		Disconnect each device from harness and measure from connection side of harness connector.
	Requirements		There is continuity.
	Inspection result (Is the judging standard satisfied?)	YES	Go to step 6.
		NO	Modify harness.

Step 6	Inspection items		Inspection of engine electronic control unit connector
	Maintenance item		Inspection of connector
	Inspection condition		–
	Requirements		• Connector is properly connected. • No trace of water entry is found. • No corrosion is found in terminal. • Connection to terminal is appropriate.
	Inspection result (Is the judging standard satisfied?)	YES	Go to step 10.
		NO	Modify connector.

Step 7	Inspection items		Inspection of harness between electronic drive unit and controller area network resistor (HIGH)
	Maintenance item		Check circuit between controller area network resistor connector terminal No. 1 and electronic drive unit connector terminal No. 15
	Inspection condition		Disconnect each device from harness and measure from connection side of harness connector.
	Requirements		There is continuity.
	Inspection result (Is the judging standard satisfied?)	YES	Go to step 8.
		NO	Modify harness.

Step 8	Inspection items		Inspection of harness between electronic drive unit and controller area network resistor (LOW)
	Maintenance item		Check circuit between controller area network resistor connector terminal No. 2 and electronic drive unit connector terminal No. 16
	Inspection condition		Disconnect each device from harness and measure from connection side of harness connector.
	Requirements		There is continuity.
	Inspection result (Is the judging standard satisfied?)	YES	Go to step 9.
		NO	Modify harness.

Step 9	Inspection items		Inspection of electronic drive unit connector
	Maintenance item		Inspection of connector
	Inspection condition		–
	Requirements		• Connector is properly connected. • No trace of water entry is found. • No corrosion is found in terminal. • Connection to terminal is appropriate.
	Inspection result (Is the judging standard satisfied?)	YES	Replace the engine electronic control unit as well if this diagnosis code occurs after the replacement of electronic drive unit.
		NO	Modify connector.

[Fault code]
Diagnosis code: P1634/Flash code: 95
[Monitor]
Abnormality in controller area network 2 communication (exhaust gas recirculation electronic drive unit 3)
[Fault (outline)]
Message timeout
[Diagnosis check]
- Controller area network communication between engine electronic control unit and exhaust gas recirculation electronic drive unit 3 is monitored for abnormality.

[Code generation condition]
- No controller area network signals from exhaust gas recirculation electronic drive unit 3 are received for more than 6 seconds.
  (Warning lamp is lit and diagnosis code is displayed on first establishment of code generation condition.)

[Diagnosis check timing]
- When code generation condition is established after starter switch ON

[Diagnostic requirement]
- 2 seconds passed after starter switch ON
- 2 seconds passed after cranking
- Battery voltage: normal
- Controller area network 2 communication in order

[Control effected by electronic control unit during fault]
- Injection quantity is limited.
- Exhaust gas recirculation control is stopped.
- Throttle control is stopped.
- Diesel particulate filter regeneration (manual or automatic) is stopped.

[Probable cause of trouble]
- Open-circuit or short-circuit of harness between engine electronic control unit and exhaust gas recirculation electronic drive unit 3
- Abnormality of each connector
- Abnormality of engine electronic control unit
- Abnormality of exhaust gas recirculation electronic drive unit 3
- Abnormality of controller area network resistor

[Recoverability]
<Control during fault>
- Recovered if signal becomes normal with starter switch in ON position.

<Warning lamp>
- Extinguished at 4th driving cycle after normal signal is input.

<Fault code>
- Automatically cleared at 40th warm up cycle after warning lamp is extinguished.
  (To clear as desired, erase from the memory.)

Driving cycle : “Starter switch ON to start engine till starter switch OFF” constitutes 1 driving cycle.
Warm up cycle : “Starter switch ON to start engine till starter switch OFF after coolant temperature increased and engine warmed up” constitutes 1 warm up cycle.

[Electronic Control Unit Connection Diagram]

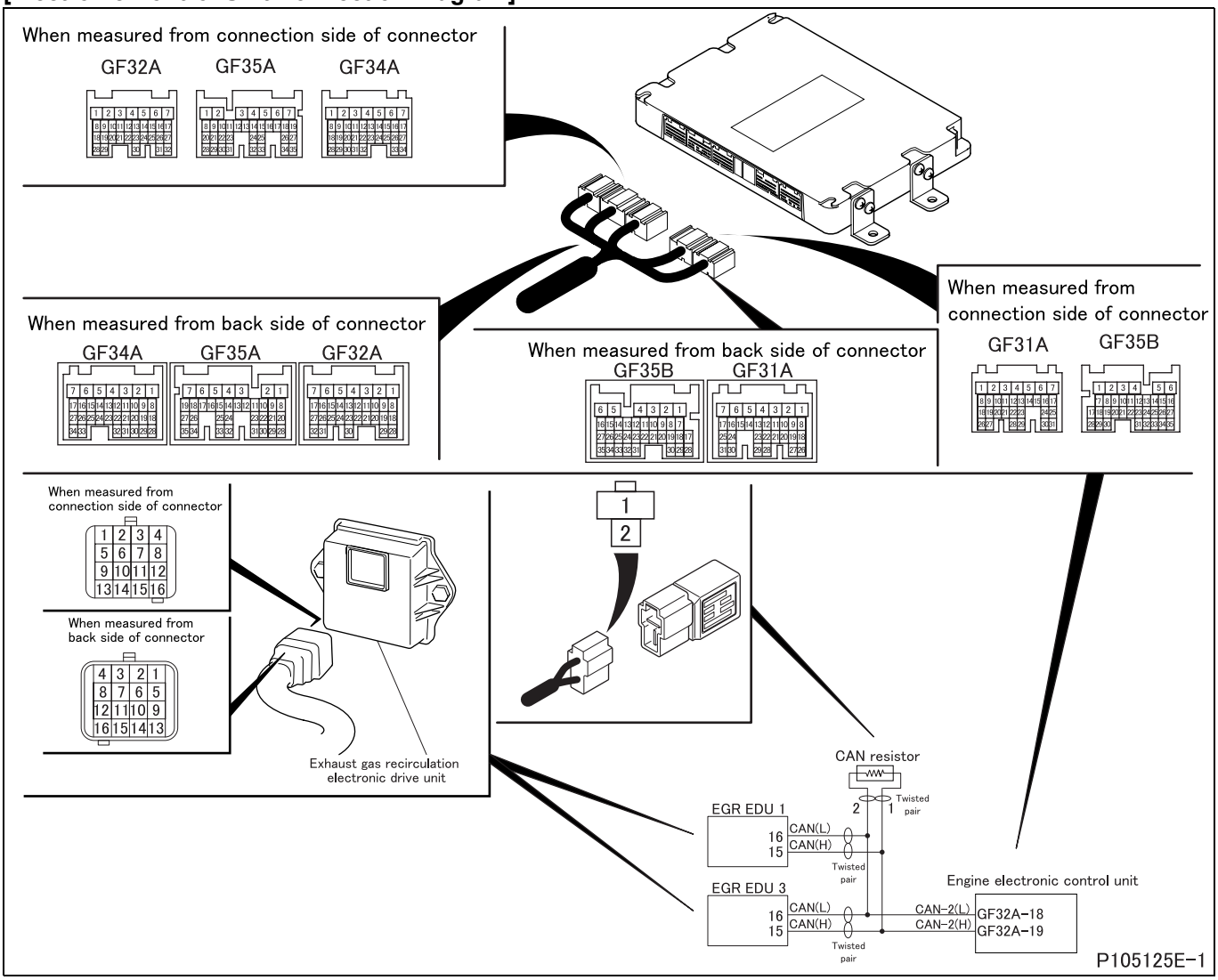

[Parts Identification and Location]

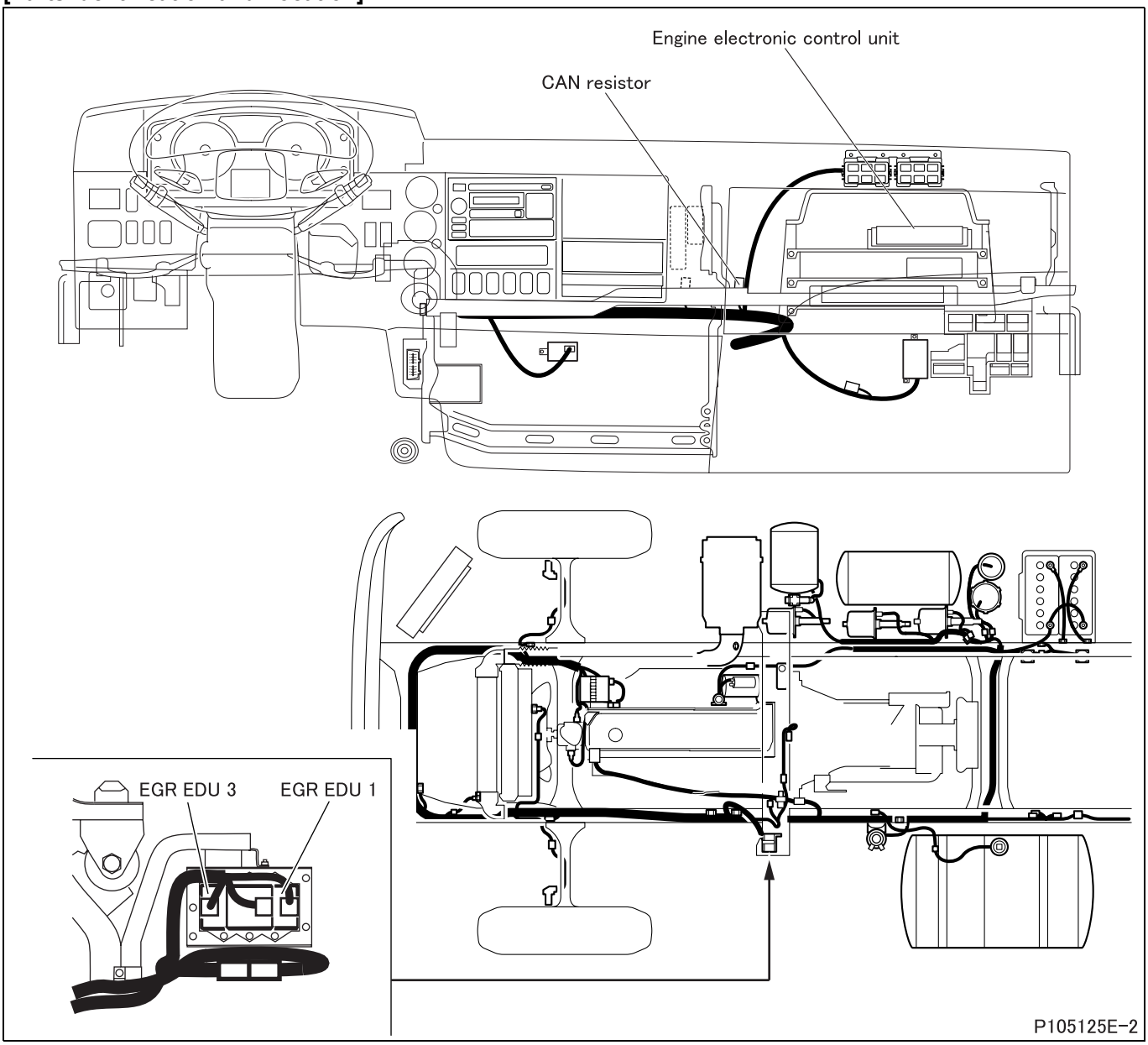

[Fault diagnosis]

- Perform checks in the sequence of the following steps.

Step 1	Inspection items		Inspection by engine electronic control unit connector
	Maintenance item		Measure value of resistance between engine electronic control unit connector (GF32A) terminals No. 18 and 19.
	Inspection condition		Disconnect each device from harness and measure from connection side of harness connector.
	Requirements		120 ± 6 Ω
	Inspection result (Is the judging standard satisfied?)	YES	Go to step 7.
		NO	Go to step 2.

Step 2	Inspection items		Inspection of controller area network resistor connector
	Maintenance item		Inspection of connector
	Inspection condition		–
	Requirements		• Connector is properly connected. • No trace of water entry is found. • No corrosion is found in terminal. • Connection to terminal is appropriate.
	Inspection result (Is the judging standard satisfied?)	YES	Go to step 3.
		NO	Modify connector.

Step 3	Inspection items		Inspection of controller area network resistor unit
	Maintenance item		Measure value of resistance between connector terminals No. 1 and 2.
	Inspection condition		Disconnect connector and measure resistor side.
	Requirements		120 ± 6 Ω
	Inspection result (Is the judging standard satisfied?)	YES	Go to step 4.
		NO	Replacement of controller area network resistor

<Step 3 inspection diagram>

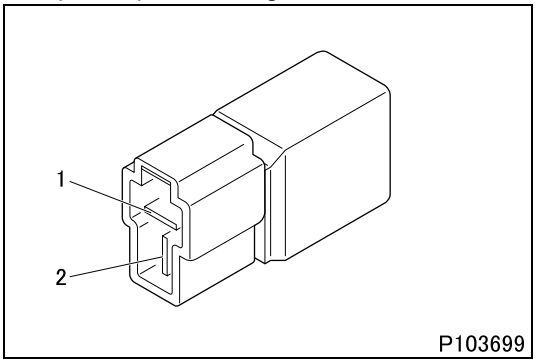

Step 4	Inspection items		Inspection of harness between engine electronic control unit and controller area network resistor (HIGH)
	Maintenance item		Check circuit between controller area network resistor connector terminal No. 1 and engine electronic control unit connector (GF32A) terminal No. 19
	Inspection condition		Disconnect each device from harness and measure from connection side of harness connector.
	Requirements		There is continuity.
	Inspection result (Is the judging standard satisfied?)	YES	Go to step 5.
		NO	Modify harness.

Step 5	Inspection items		Inspection of harness between engine electronic control unit and controller area network resistor (LOW)
	Maintenance item		Check circuit between controller area network resistor connector terminal No. 2 and engine electronic control unit connector (GF32A) terminal No. 18
	Inspection condition		Disconnect each device from harness and measure from connection side of harness connector.
	Requirements		There is continuity.
	Inspection result (Is the judging standard satisfied?)	YES	Go to step 6.
		NO	Modify harness.

Step 6	Inspection items		Inspection of engine electronic control unit connector
	Maintenance item		Inspection of connector
	Inspection condition		–
	Requirements		• Connector is properly connected. • No trace of water entry is found. • No corrosion is found in terminal. • Connection to terminal is appropriate.
	Inspection result (Is the judging standard satisfied?)	YES	Go to step 10.
		NO	Modify connector.

Step 7	Inspection items		Inspection of harness between electronic drive unit and controller area network resistor (HIGH)
	Maintenance item		Check circuit between controller area network resistor connector terminal No. 1 and electronic drive unit connector terminal No. 15
	Inspection condition		Disconnect each device from harness and measure from connection side of harness connector.
	Requirements		There is continuity.
	Inspection result (Is the judging standard satisfied?)	YES	Go to step 8.
		NO	Modify harness.

Step 8	Inspection items		Inspection of harness between electronic drive unit and controller area network resistor (LOW)
	Maintenance item		Check circuit between controller area network resistor connector terminal No. 2 and electronic drive unit connector terminal No. 16
	Inspection condition		Disconnect each device from harness and measure from connection side of harness connector.
	Requirements		There is continuity.
	Inspection result (Is the judging standard satisfied?)	YES	Go to step 9.
		NO	Modify harness.

Step 9	Inspection items		Inspection of electronic drive unit connector
	Maintenance item		Inspection of connector
	Inspection condition		–
	Requirements		• Connector is properly connected. • No trace of water entry is found. • No corrosion is found in terminal. • Connection to terminal is appropriate.
	Inspection result (Is the judging standard satisfied?)	YES	Replace the engine electronic control unit as well if this diagnosis code occurs after the replacement of electronic drive unit.
		NO	Modify connector.

[Fault code]
Diagnosis code: P1635/Flash code: 96
[Monitor]
Abnormality in controller area network 2 communication (intake throttle)
[Fault (outline)]
Message timeout
[Diagnosis check]
- Controller area network communication between engine electronic control unit and throttle electronic drive unit is monitored for abnormality.

[Code generation condition]
- No controller area network signals from exhaust gas recirculation electronic drive unit are received for more than 6 seconds.
  (Warning lamp is lit and diagnosis code is displayed on first establishment of code generation condition.)

[Diagnosis check timing]
- When code generation condition is established after starter switch ON

[Diagnostic requirement]
- 2 seconds passed after starter switch ON
- 2 seconds passed after cranking
- Battery voltage: normal
- Controller area network 2 communication in order

[Control effected by electronic control unit during fault]
- Injection quantity is limited.
- Exhaust gas recirculation control is stopped.
- Throttle control is stopped.
- Diesel particulate filter regeneration (manual or automatic) is stopped.
- Fault detection for controller area network communication is stopped.

[Probable cause of trouble]
- Open-circuit or short-circuit of harness between engine electronic control unit and throttle electronic drive unit
- Abnormality of each connector
- Abnormality of engine electronic control unit
- Abnormality of throttle electronic drive unit
- Abnormality of controller area network resistor

[Recoverability]
<Control during fault>
- Recovered if signal becomes normal with starter switch in ON position.

<Warning lamp>
- Extinguished at 4th driving cycle after normal signal is input.

<Fault code>
- Automatically cleared at 40th warm up cycle after warning lamp is extinguished.
  (To clear as desired, erase from the memory.)

Driving cycle : “Starter switch ON to start engine till starter switch OFF” constitutes 1 driving cycle.
Warm up cycle : “Starter switch ON to start engine till starter switch OFF after coolant temperature increased and engine warmed up” constitutes 1 warm up cycle.

[Electronic Control Unit Connection Diagram]

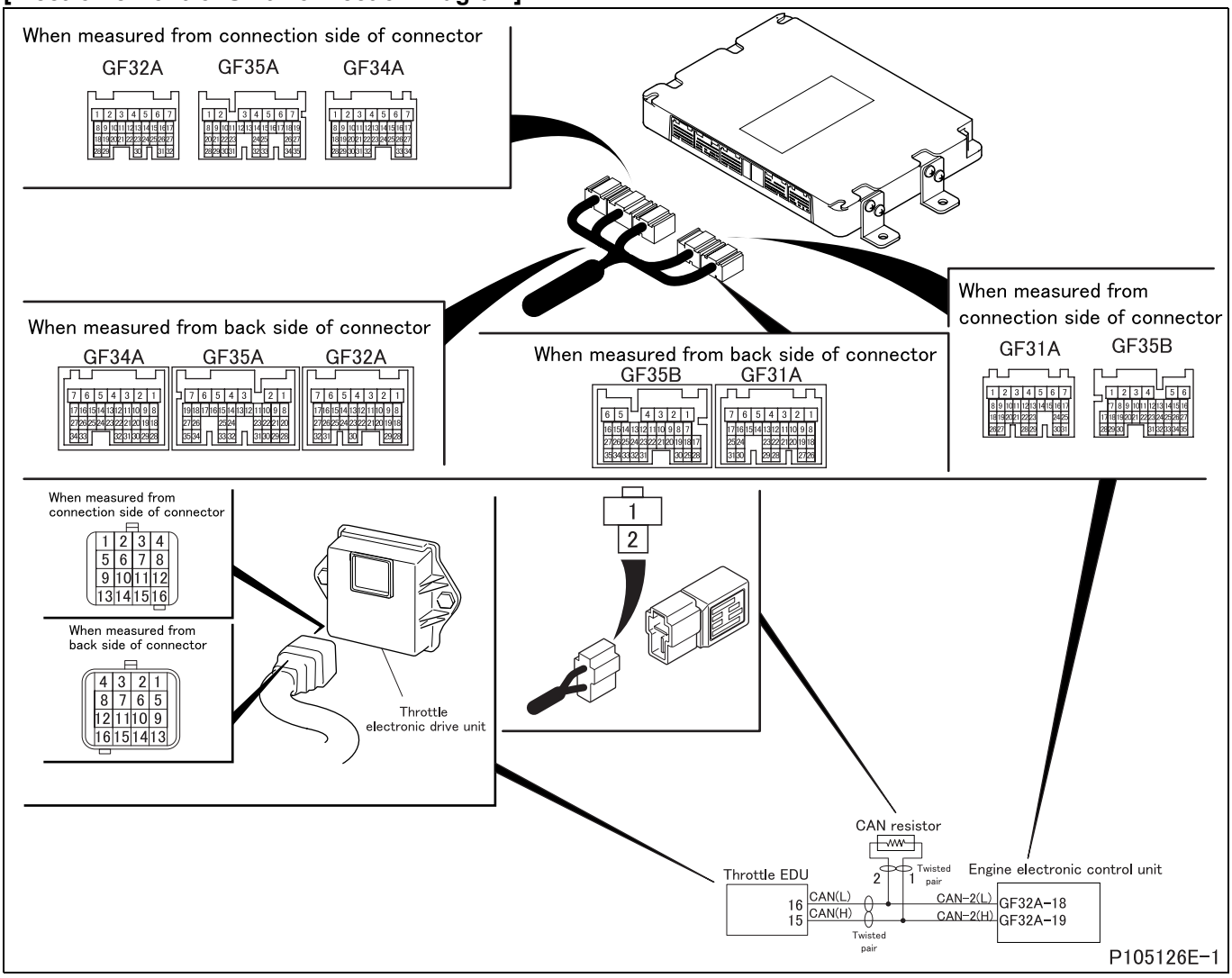

[Parts Identification and Location]

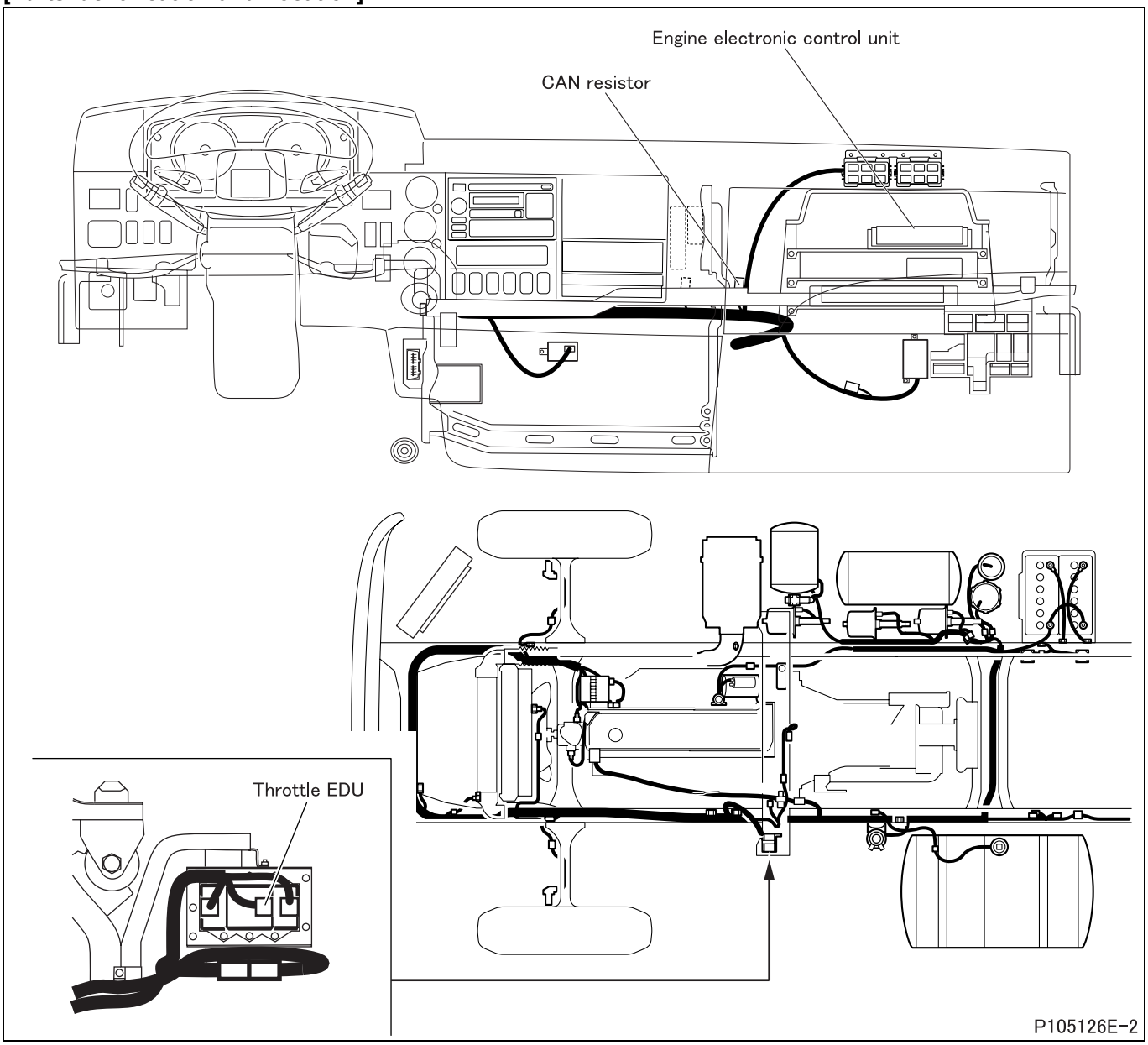

[Fault diagnosis]

- Perform checks in the sequence of the following steps.

Step 1	Inspection items		Inspection by engine electronic control unit connector
	Maintenance item		Measure value of resistance between engine electronic control unit connector (GF32A) terminals No. 18 and 19.
	Inspection condition		Disconnect each device from harness and measure from connection side of harness connector.
	Requirements		120 ± 6 Ω
	Inspection result (Is the judging standard satisfied?)	YES	Go to step 7.
		NO	Go to step 2.

Step 2	Inspection items		Inspection of controller area network resistor connector
	Maintenance item		Inspection of connector
	Inspection condition		–
	Requirements		• Connector is properly connected. • No trace of water entry is found. • No corrosion is found in terminal. • Connection to terminal is appropriate.
	Inspection result (Is the judging standard satisfied?)	YES	Go to step 3.
		NO	Modify connector.

Step 3	Inspection items		Inspection of controller area network resistor unit
	Maintenance item		Measure value of resistance between connector terminals No. 1 and 2.
	Inspection condition		Disconnect connector and measure resistor side.
	Requirements		120 ± 6 Ω
	Inspection result (Is the judging standard satisfied?)	YES	Go to step 4.
		NO	Replacement of controller area network resistor

<Step 3 inspection diagram>

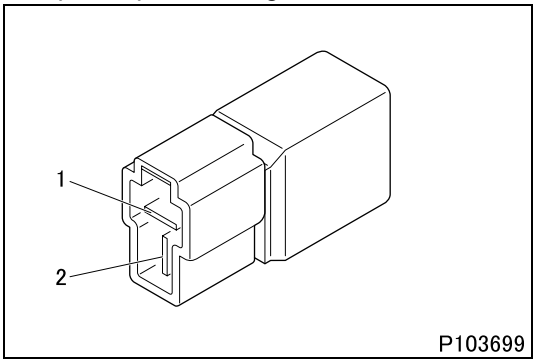

Step 4	Inspection items		Inspection of harness between engine electronic control unit and controller area network resistor (HIGH)
	Maintenance item		Check circuit between controller area network resistor connector terminal No. 1 and engine electronic control unit connector (GF32A) terminal No. 19
	Inspection condition		Disconnect each device from harness and measure from connection side of harness connector.
	Requirements		There is continuity.
	Inspection result (Is the judging standard satisfied?)	YES	Go to step 5.
		NO	Modify harness.

Step 5	Inspection items		Inspection of harness between engine electronic control unit and controller area network resistor (LOW)
	Maintenance item		Check circuit between controller area network resistor connector terminal No. 2 and engine electronic control unit connector (GF32A) terminal No. 18
	Inspection condition		Disconnect each device from harness and measure from connection side of harness connector.
	Requirements		There is continuity.
	Inspection result (Is the judging standard satisfied?)	YES	Go to step 6.
		NO	Modify harness.

Step 6	Inspection items		Inspection of engine electronic control unit connector
	Maintenance item		Inspection of connector
	Inspection condition		–
	Requirements		• Connector is properly connected. • No trace of water entry is found. • No corrosion is found in terminal. • Connection to terminal is appropriate.
	Inspection result (Is the judging standard satisfied?)	YES	Go to step 10.
		NO	Modify connector.

Step 7	Inspection items		Inspection of harness between electronic drive unit and controller area network resistor (HIGH)
	Maintenance item		Check circuit between controller area network resistor connector terminal No. 1 and electronic drive unit connector terminal No. 15
	Inspection condition		Disconnect each device from harness and measure from connection side of harness connector.
	Requirements		There is continuity.
	Inspection result (Is the judging standard satisfied?)	YES	Go to step 8.
		NO	Modify harness.

Step 8	Inspection items		Inspection of harness between electronic drive unit and controller area network resistor (LOW)
	Maintenance item		Check circuit between controller area network resistor connector terminal No. 2 and electronic drive unit connector terminal No. 16
	Inspection condition		Disconnect each device from harness and measure from connection side of harness connector.
	Requirements		There is continuity.
	Inspection result (Is the judging standard satisfied?)	YES	Go to step 9.
		NO	Modify harness.

Step 9	Inspection items		Inspection of electronic drive unit connector
	Maintenance item		Inspection of connector
	Inspection condition		–
	Requirements		• Connector is properly connected. • No trace of water entry is found. • No corrosion is found in terminal. • Connection to terminal is appropriate.
	Inspection result (Is the judging standard satisfied?)	YES	Replace the engine electronic control unit as well if this diagnosis code occurs after the replacement of electronic drive unit.
		NO	Modify connector.

[Fault code]
Diagnosis code: P1660/Flash code: 29
[Monitor]
Abnormality of diesel particulate filter indicator lamp
[Fault (outline)]
- Short circuit ground
- Open circuit

[Diagnosis check]
- Diesel particulate filter indicator lamp circuit is monitored for fault. (Conformity between lamp ON command and terminal voltage is checked.)

[Code generation condition]
- Lamp is checked for lighting or otherwise when starter switch is turned ON through lamp check function in meter cluster.
  (Warning lamp is lit and diagnosis code is displayed on first establishment of code generation condition.)

[Diagnosis check timing]
- When code generation condition is established after starter switch ON

[Diagnostic requirement]
- 2 seconds passed after starter switch ON
- 2 seconds passed after cranking
- Battery voltage: normal
- Diesel particulate filter lamp ON command: not available

[Control effected by electronic control unit during fault]
- Effects no special control.

[Probable cause of trouble]
- Open-circuit or short-circuit of harness between electronic control unit and diesel particulate filter indicator lamp
- Abnormality of each connector
- Abnormality of diesel particulate filter indicator lamp
- Abnormality in electronic control unit

[Recoverability]
<Control during fault>
- Not reset unless diagnosis code is erased.

<Fault code>
- Automatically cleared at 40th warm up cycle after warning lamp is extinguished.
  (To clear as desired, erase from the memory.)

Warm up cycle : “Starter switch ON to start engine till starter switch OFF after coolant temperature increased and engine warmed up” constitutes 1 warm up cycle.

[Electronic Control Unit Connection Diagram]

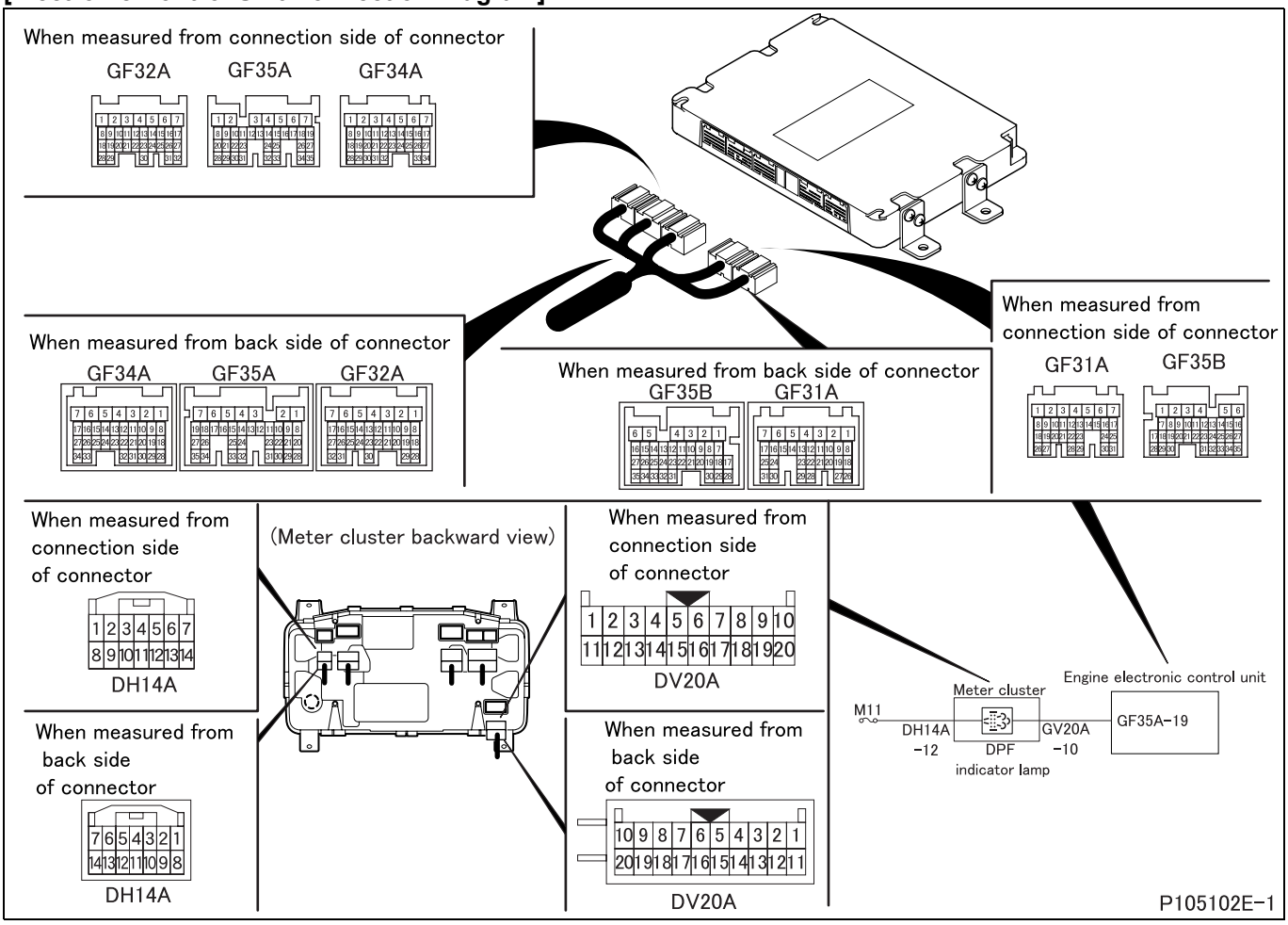

[Parts Identification and Location]

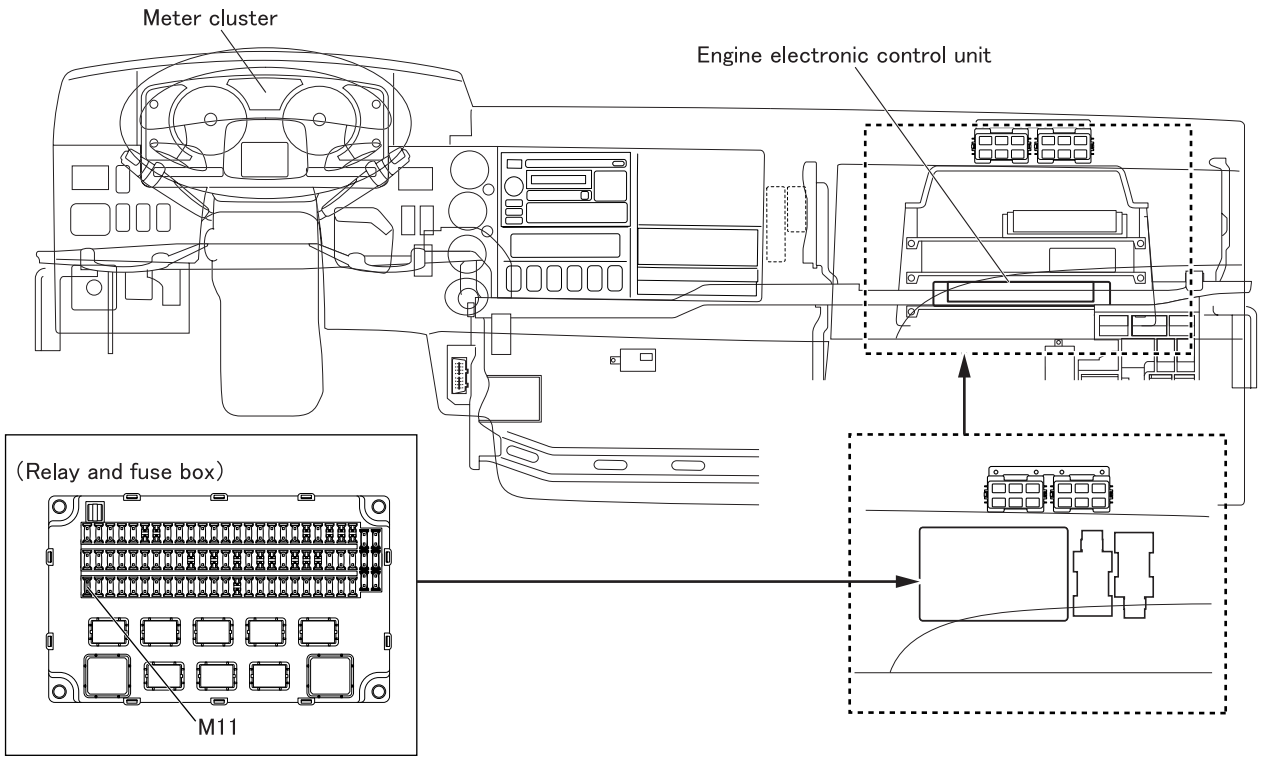

[Fault diagnosis]

- Perform checks in the sequence of the following steps.

Step 1	Inspection items		Inspection by control data
	Maintenance item		Measure item No. 93 “DPF Lamp” of Service Data.
	Inspection condition		Perform Multi-Use Tester actuator test item No. A8 “DPF Lamp”.
	Requirements		Diesel particulate filter indicator lamp lit (automatic reset after 15 seconds).
	Inspection result (Is the judging standard satisfied?)	YES	Go to transient fault (See Gr00.).
		NO	Go to step 2.

Step 2	Inspection items		Inspection by electronic control unit connector
	Maintenance item		Ground connector (GF35A) terminal No. 19.
	Inspection condition		It wires for the ground harness from the other side of the connector.
	Requirements		Diesel particulate filter indicator lamp illuminates.
	Inspection result (Is the judging standard satisfied?)	YES	Go to step 3.
		NO	Go to step 4.

Step 3	Inspection items		Inspection of electronic control unit connector
	Maintenance item		Inspection of connector
	Inspection condition		–
	Requirements		• Connector is properly connected. • No trace of water entry is found. • No corrosion is found in terminal. • Connection to terminal is appropriate.
	Inspection result (Is the judging standard satisfied?)	YES	Go to step 4.
		NO	Modify connector.

Step 4	Inspection items		Inspection of harness between fuse and meter cluster
	Maintenance item		Check circuit between fuse (M11) and meter cluster connector (DH14A) terminal No. 12.
	Inspection condition		Disconnect each device from harness and measure from connection side of harness connector.
	Requirements		There is continuity.
	Inspection result (Is the judging standard satisfied?)	YES	Go to step 5.
		NO	Modify harness.

Step 5	Inspection items		Inspection of harness between electronic control unit and meter cluster
	Maintenance item		Check circuit between electronic control unit connector (GF35A) terminal No. 19 and meter cluster connector (GV20A) terminal No. 10.
	Inspection condition		Disconnect each device from harness and measure from connection side of harness connector.
	Requirements		There is continuity.
	Inspection result (Is the judging standard satisfied?)	YES	Go to step 6.
		NO	Modify harness.

Step 6	Inspection items		Inspection of meter cluster
	Maintenance item		Inspection of connector
	Inspection condition		–
	Requirements		• Connector is properly connected. • No trace of water entry is found. • No corrosion is found in terminal. • Connection to terminal is appropriate.
	Inspection result (Is the judging standard satisfied?)	YES	Replacement of meter cluster or lamp
		NO	Modify connector.

[Fault code]
Diagnosis code: P1661/Flash code: 29
[Monitor]
Abnormality of diesel particulate filter indicator lamp
[Fault (outline)]
- Short circuit battery
- Conformity between diesel particulate filter lamp ON command and electronic control unit terminal voltage is checked.

[Diagnosis check]
- Diesel particulate filter indicator lamp circuit is monitored for fault.

[Code generation condition]
- Lamp is checked for lighting or otherwise when starter switch is turned ON through lamp check function in meter cluster.
  (Warning lamp is lit and diagnosis code is displayed on first establishment of code generation condition.)

[Diagnosis check timing]
- When code generation condition is established after starter switch ON

[Diagnostic requirement]
- 2 seconds passed after starter switch ON
- 2 seconds passed after cranking
- Battery voltage: normal
- Diesel particulate filter lamp ON command: available

[Control effected by electronic control unit during fault]
- Effects no special control.

[Probable cause of trouble]
- Open-circuit or short-circuit of harness between electronic control unit and diesel particulate filter indicator lamp
- Abnormality of each connector
- Abnormality of diesel particulate filter indicator lamp
- Abnormality in electronic control unit

[Recoverability]
<Control during fault>
- Not reset unless diagnosis code is erased.

<Fault code>
- Automatically cleared at 40th warm up cycle after warning lamp is extinguished.
  (To clear as desired, erase from the memory.)

Warm up cycle : “Starter switch ON to start engine till starter switch OFF after coolant temperature increased and engine warmed up” constitutes 1 warm up cycle.

[Electronic Control Unit Connection Diagram]

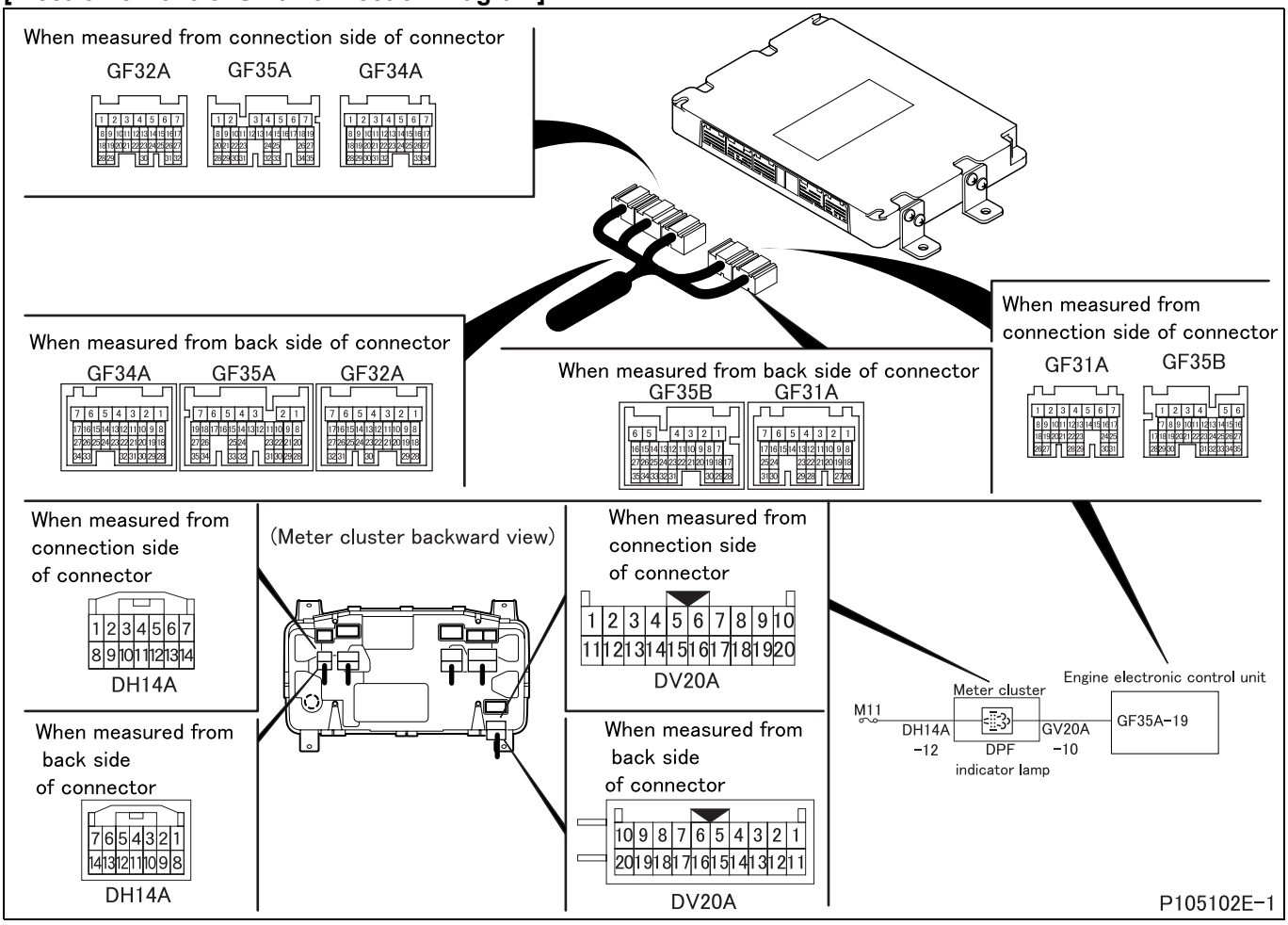

[Parts Identification and Location]

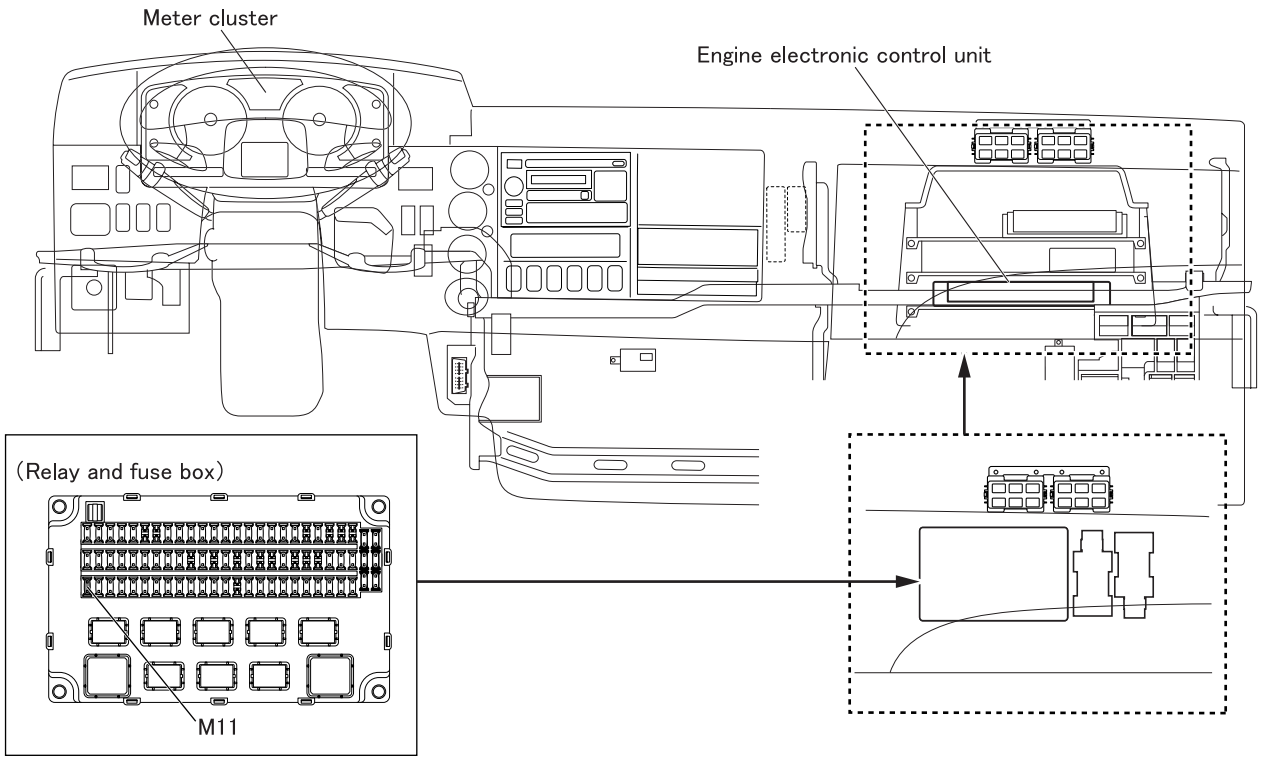

[Fault diagnosis]

- Perform checks in the sequence of the following steps.

Step 1	Inspection items		Inspection by control data
	Maintenance item		Measure item No. 93 “DPF Lamp” of Service Data.
	Inspection condition		Perform Multi-Use Tester actuator test item No. A8 “DPF Lamp”.
	Requirements		Diesel particulate filter indicator lamp lit (automatic reset after 15 seconds).
	Inspection result (Is the judging standard satisfied?)	YES	Go to transient fault (See Gr00.).
		NO	Go to step 2.

Step 2	Inspection items		Inspection by electronic control unit connector
	Maintenance item		Ground connector (GF35A) terminal No. 19.
	Inspection condition		It wires for the ground harness from the other side of the connector.
	Requirements		Diesel particulate filter indicator lamp illuminates
	Inspection result (Is the judging standard satisfied?)	YES	Go to step 3.
		NO	Go to step 4.

Step 3	Inspection items		Inspection of electronic control unit connector
	Maintenance item		Inspection of connector
	Inspection condition		–
	Requirements		• Connector is properly connected. • No trace of water entry is found. • No corrosion is found in terminal. • Connection to terminal is appropriate.
	Inspection result (Is the judging standard satisfied?)	YES	Go to step 4.
		NO	Modify connector.

Step 4	Inspection items		Inspection of harness between fuse and meter cluster
	Maintenance item		Check circuit between fuse (M11) and meter cluster connector (DH14A) terminal No. 12.
	Inspection condition		Disconnect each device from harness and measure from connection side of harness connector.
	Requirements		There is continuity.
	Inspection result (Is the judging standard satisfied?)	YES	Go to step 5.
		NO	Modify harness.

Step 5	Inspection items		Inspection of harness between electronic control unit and meter cluster
	Maintenance item		Check circuit between electronic control unit connector (GF35A) terminal No. 19 and meter cluster connector (GV20A) terminal No. 10.
	Inspection condition		Disconnect each device from harness and measure from connection side of harness connector.
	Requirements		There is continuity.
	Inspection result (Is the judging standard satisfied?)	YES	Go to step 6.
		NO	Modify harness.

Step 6	Inspection items		Inspection of meter cluster
	Maintenance item		Inspection of connector
	Inspection condition		–
	Requirements		• Connector is properly connected. • No trace of water entry is found. • No corrosion is found in terminal. • Connection to terminal is appropriate.
	Inspection result (Is the judging standard satisfied?)	YES	Replacement of meter cluster or lamp
		NO	Modify connector.

[Fault code]
Diagnosis code: P2002/Flash code: 92
[Monitor]
Diesel particulate filter broken
[Fault (outline)]
Excessive delta pressure
[Diagnosis check]
- Pressure value calculated based on outputs from DPF pressure sensor (DIFF) is compared to that obtained from exhaust gas flow to judge if diesel particulate filter is broken or not.

[Code generation condition]
- Deviation remains less than specified limits for approx. 30 seconds.
  (Warning lamp is lit and diagnosis code is displayed on second establishment of code generation condition.)

[Diagnosis check timing]
- When code generation condition is established after starter switch ON

[Diagnostic requirement]
- Exhaust gas recirculation flow rate: more than 1000 m^3/hr
- Intake air temperature sensor 2: normal in output signal
- Catalytic temperature sensor: normal in output signal
- Air flow sensor: normal in output signal
- DPF temperature sensor 1: normal in output signal
- Check of intake air temperature sensor 2: normal
- Check of DPF temperature sensor 1: normal
- Check of catalyst temperature sensor: normal

[Control effected by electronic control unit during fault]
- Effects no special control.

[Probable cause of trouble]
- Abnormality of diesel particulate filter indicator lamp
- Abnormality of diesel particulate filter cleaning switch
- Manual diesel particulate filter regeneration is not performed.
- Excessive smoke emission (due to malfunction of engine proper, common rail or exhaust gas recirculation system)
- Abnormality of air flow sensor
- Abnormality of DPF absolute pressure sensor
- Abnormality of DPF pressure sensor (DIFF)
- Abnormality of diesel particulate filter

[Recoverability]
<Control during fault>
- Recovered if signal becomes normal with starter switch in ON position.

<Warning lamp>
- Extinguished at 4th driving cycle after normal signal is input.

<Fault code>
- Automatically cleared at 40th warm up cycle after warning lamp is extinguished.
  (To clear as desired, erase from the memory.)

Driving cycle : “Starter switch ON to start engine till starter switch OFF” constitutes 1 driving cycle.
Warm up cycle : “Starter switch ON to start engine till starter switch OFF after coolant temperature increased and engine warmed up” constitutes 1 warm up cycle.

[Electronic Control Unit Connection Diagram]

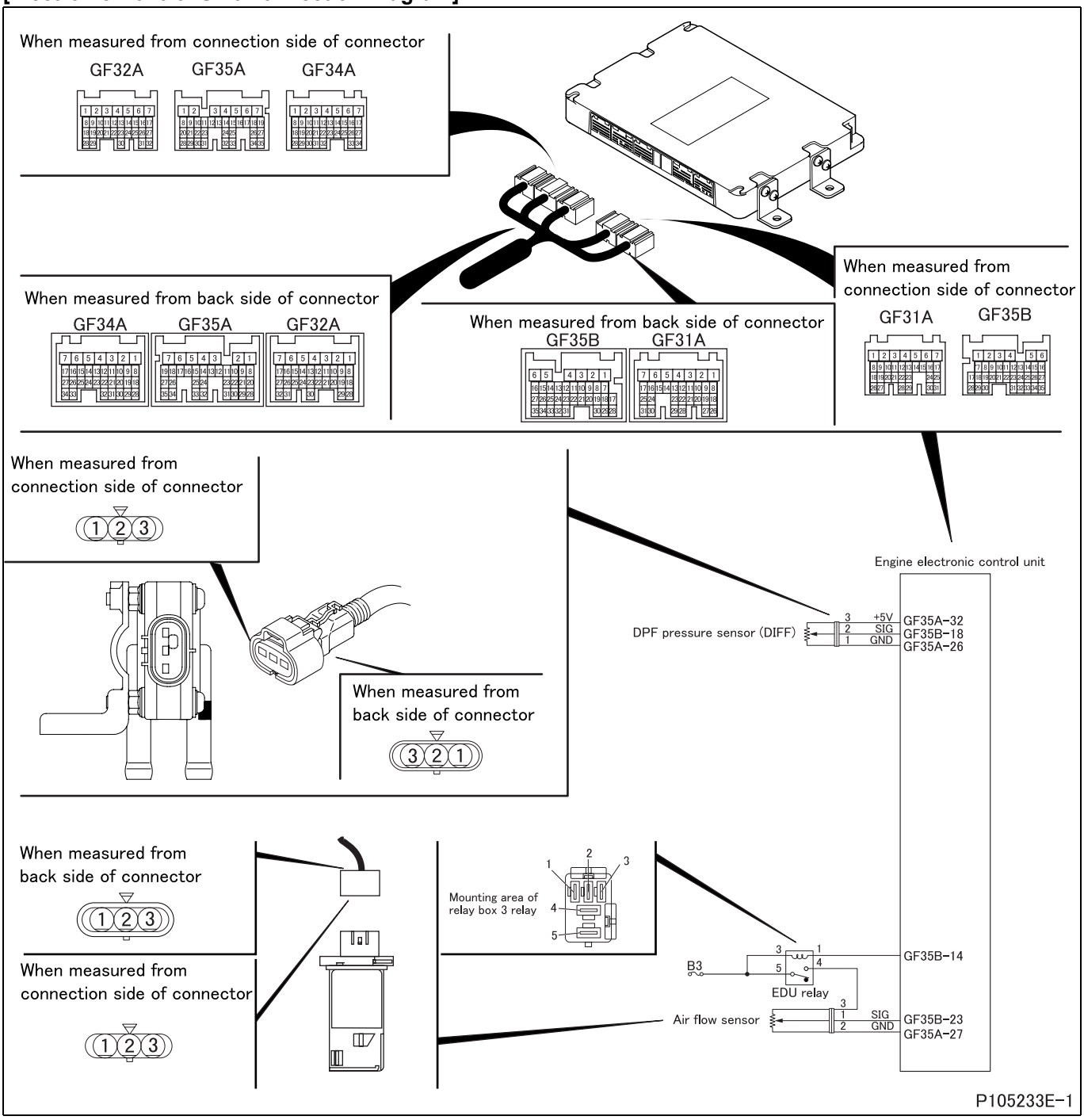

[Parts Identification and Location]

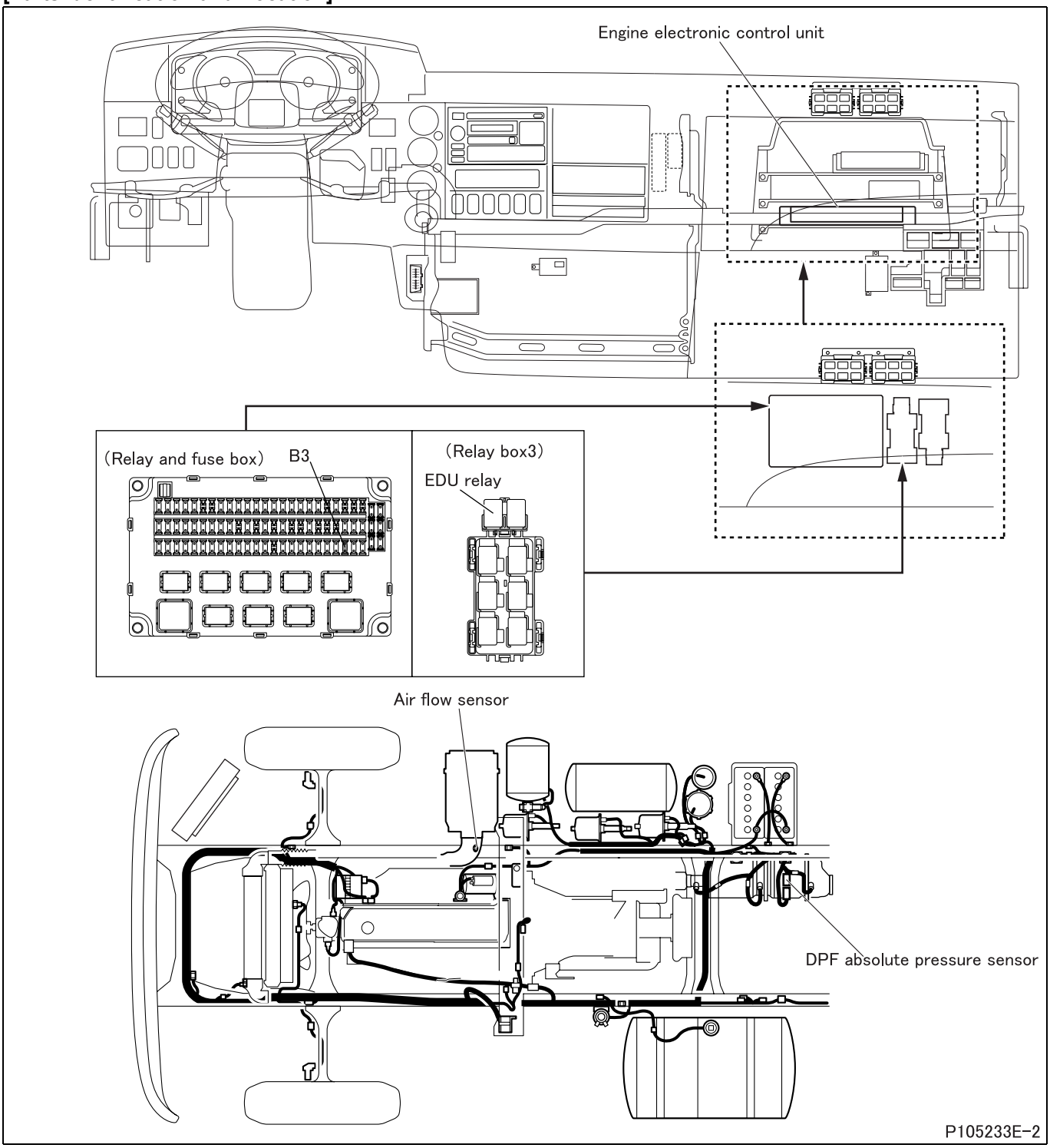

[Fault diagnosis]

- Perform checks in the sequence of the following steps.

Step 1	Inspection items		Inspection of oil level
	Maintenance item		Inspection of engine oil level
	Inspection condition		Engine stopped
	Requirements		Oil level for inspection is not exceeded.
	Inspection result (Is the judging standard satisfied?)	YES	Go to step 2.
		NO	After replacement of oil, go to step 2.

<Step 1 inspection diagram>

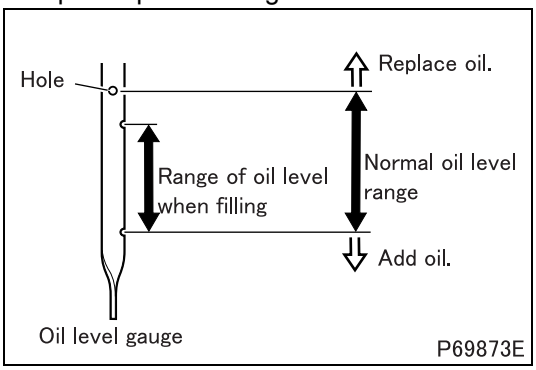

Step 2	Inspection items		Inspection by manual diesel particulate filter regeneration
	Maintenance item		Perform Multi-Use Tester actuator test item No. A5 “DPF Regeneration (Manual)”, and clean ceramic diesel particulate filter.
	Inspection condition		• Vehicle: stationary (vehicle speed 0 km/h {0 MPH}) • Starter switch: ON (engine started) • Engine start: At idle • Place the transmission in neutral. (place the automatic transmission in P range) • Parking brake: vehicle parked (parking brake switch: ON) • After engine warm-up
	Requirements		This diagnosis code does not occur again.
	Inspection result (Is the judging standard satisfied?)	YES	End of inspection
		NO	Go to step 3.

Step 3	Inspection items		Unit inspection of diesel particulate filter
	Maintenance item		Check the exhaust passage inside the diesel particulate filter for adhesion of soot in large quantity.
	Inspection condition		Remove diesel particulate filter.
	Requirements		No soot is deposited.
	Inspection result (Is the judging standard satisfied?)	YES	Go to step 4.
		NO	After replacement of ceramic filter, perform resetting the DPF-related information.

<Step 3 inspection diagram>

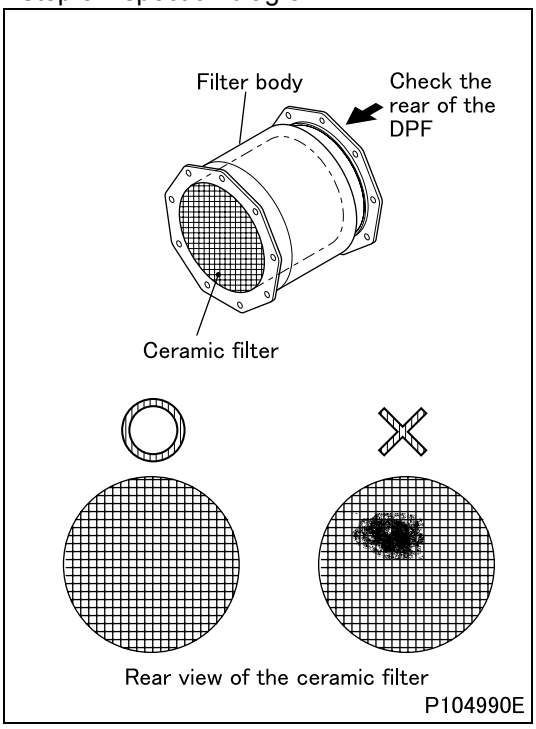

Step 4	Inspection items		Inspection of diesel particulate filter unit for clogging and cleaning of the diesel particulate filter unit
	Maintenance item		See Gr15 “Diesel Particulate Filter Unit Inspection for Clogging and Cleaning the Diesel Particulate Filter Unit”
	Inspection condition		Perform the following preparatory works. • Place the transmission in neutral. (place the automatic transmission in P range) • Turn the steering wheel in neutral position and securely apply the parking brake. • Turn off air conditioner not to increase the engine speed. • Check diagnosis code of each electronic control system. If any fault exists, rectify it. • Resetting the DPF-related information (perform “History reset” of Multi-Use Tester) (See Gr15 “Resetting the DPF-related information”.) • Warm up the engine until the engine coolant has been heated to more than 70°C {158°F}. (verify from Service Data “Engine Coolant Temperature” or “35: Water Temperature”)
	Requirements		This diagnosis code does not occur again.
	Inspection result (Is the judging standard satisfied?)	YES	End of inspection
		NO	Go to step 5.

Step 5	Inspection items		Inspection by control data
	Maintenance item		Measure item No. 93 “DPF Lamp” of Service Data.
	Inspection condition		Perform Multi-Use Tester actuator test item No. A8 “DPF Lamp”.
	Requirements		Diesel particulate filter indicator lamp illuminates (automatic reset after 15 seconds)
	Inspection result (Is the judging standard satisfied?)	YES	Go to step 6.
		NO	Replacement of engine electronic control unit

Step 6	Inspection items		Inspection by control data
	Maintenance item		Measure item No. 75 “DPF SW” of Service Data.
	Inspection condition		–
	Requirements		Press diesel particulate filter cleaning switch and check that “DPF SW” display switches from OFF to ON.
	Inspection result (Is the judging standard satisfied?)	YES	Go to step 7.
		NO	Replacement of diesel particulate filter cleaning switch or engine electronic control unit

Step 7	Inspection items		Inspection of pressure hose
	Maintenance item		Check pressure hose of DPF absolute pressure sensor and DPF pressure sensor (DIFF) for connection and cracks.
	Inspection condition		–
	Requirements		Nothing abnormal detected
	Inspection result (Is the judging standard satisfied?)	YES	Go to step 8.
		NO	After correction and replacement of hose, go to step 8.

Step 8	Inspection items		Inspection of DPF pressure sensor (DIFF)
	Maintenance item		Measure value of voltage between connector terminals No. 2 (+) and 1 (–).
	Inspection condition		• Apply voltage DC 5 V across terminals No. 3 (+) and 1 (–). • Gradually increase applied air pressure.
	Requirements		• 0 ± 3.5 kPa {0 ± 0.5 psi, 0 ± 0.04 kgf/cm^2}: 1 V • 100 ± 3.5 kPa {15 ± 0.5 psi, 1.02 ± 0.04 kgf/cm^2}: 4.5 V
	Inspection result (Is the judging standard satisfied?)	YES	Go to step 9.
		NO	Replacement of DPF pressure sensor (DIFF)

<Step 8 inspection diagram>

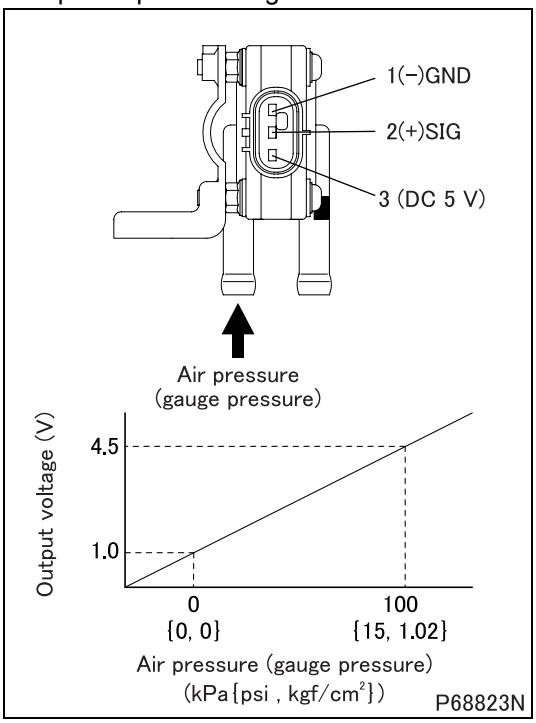

Step 9	Inspection items		Inspection of air flow sensor unit
	Maintenance item		Since inspection of single part is not easy, whether characteristics are deteriorated or not must be checked for the sensor mounted on the current vehicle by measuring and comparing the amount of sensor intake air of the sensor currently mounted on vehicle and that replaced with new one by the service data. **(1) Prepare for inspection** • Clean or replace air cleaner element. • Prepare a new air flow sensor. • Warm up the engine fully. **(2) Measure the intake air of current sensor** • Keep pressing the accelerator pedal until it bottom the stopper bolt from the idling state. (no load maximum rotation) • Measure the following items from among “Service data”. **<General Scanning Tool used>** • Engine speed: “Ne” (rpm) • Intake air flow rate: “Air Flow Rate from MAFS” (g/s) **<Multi-Use Tester used>** • Engine speed: 01 “Engine Revolution” (rpm) • Intake air flow rate: 3A “Air Flow Sensor Output” (g/hr) **(3) Measure the intake air of new sensor** • Replace the currently mounted sensor with a new sensor. • Keep pressing the accelerator pedal until it bottom the stopper bolt from the idling state. (no load maximum rotation) • Measure intake air flow at the same rpm as that of engine revolution in item (2) of “Service data”. **(4) Comparison whether characteristics are deteriorated** • Calculate the characteristics deterioration factor (%) by the following equation. • Characteristics deterioration factor (%) = (intake air of new item – current intake air) × 100/intake air of new item.
	Inspection condition		–
	Requirements		10% or less
	Inspection result (Is the judging standard satisfied?)	YES	Go to step 10.
		NO	Replacement of air flow sensor

Step 10	Inspection items		Inspection by control data
	Maintenance item		Perform actuator test item No. B9 “Fuel Leak Check”.
	Inspection condition		Engine start: At idle
	Requirements		There is no leak from injectors (six).
	Inspection result (Is the judging standard satisfied?)	YES	• Inspection of exhaust gas recirculation system (exhaust gas recirculation pipe, exhaust gas recirculation cooler, exhaust gas recirculation valve) • Inspection of engine
		NO	Replacement of injector

[Fault code]
Diagnosis code: P2032/Flash code: 88
[Monitor]
Abnormality of DPF temperature sensor 2
[Fault (outline)]
Low signal range check
[Diagnosis check]
- Output voltage of DPF temperature sensor 2 is monitored.

[Code generation condition]
- Voltage of DPF temperature sensor 2 remains under 0.2 V for approx. 2.5 seconds.
  (Warning lamp is lit and diagnosis code is displayed on second establishment of code generation condition.)

[Diagnosis check timing]
- When code generation condition is established after starter switch ON

[Diagnostic requirement]
- 2 seconds passed after starter switch ON
- 2 seconds passed after cranking
- Battery voltage: normal
- Injection quantity: 50 mm^3/st or more
- Engine speed: 1200 rpm or more
- Water temperature: –7°C {19°F} or above

[Control effected by electronic control unit during fault]
- Control is carried out using backup value (200°C {392°F}).

[Probable cause of trouble]
- Open-circuit or short-circuit of harness between electronic control unit and DPF temperature sensor 2
- Abnormality of each connector
- Abnormality of DPF temperature sensor 2
- Abnormality in electronic control unit

[Recoverability]
<Control during fault>
- Recovered if signal becomes normal with starter switch in ON position.

<Warning lamp>
- Extinguished at 4th driving cycle after normal signal is input.

<Fault code>
- Automatically cleared at 40th warm up cycle after warning lamp is extinguished.
  (To clear as desired, erase from the memory.)

Driving cycle : “Starter switch ON to start engine till starter switch OFF” constitutes 1 driving cycle.
Warm up cycle : “Starter switch ON to start engine till starter switch OFF after coolant temperature increased and engine warmed up” constitutes 1 warm up cycle.

[Electronic Control Unit Connection Diagram]

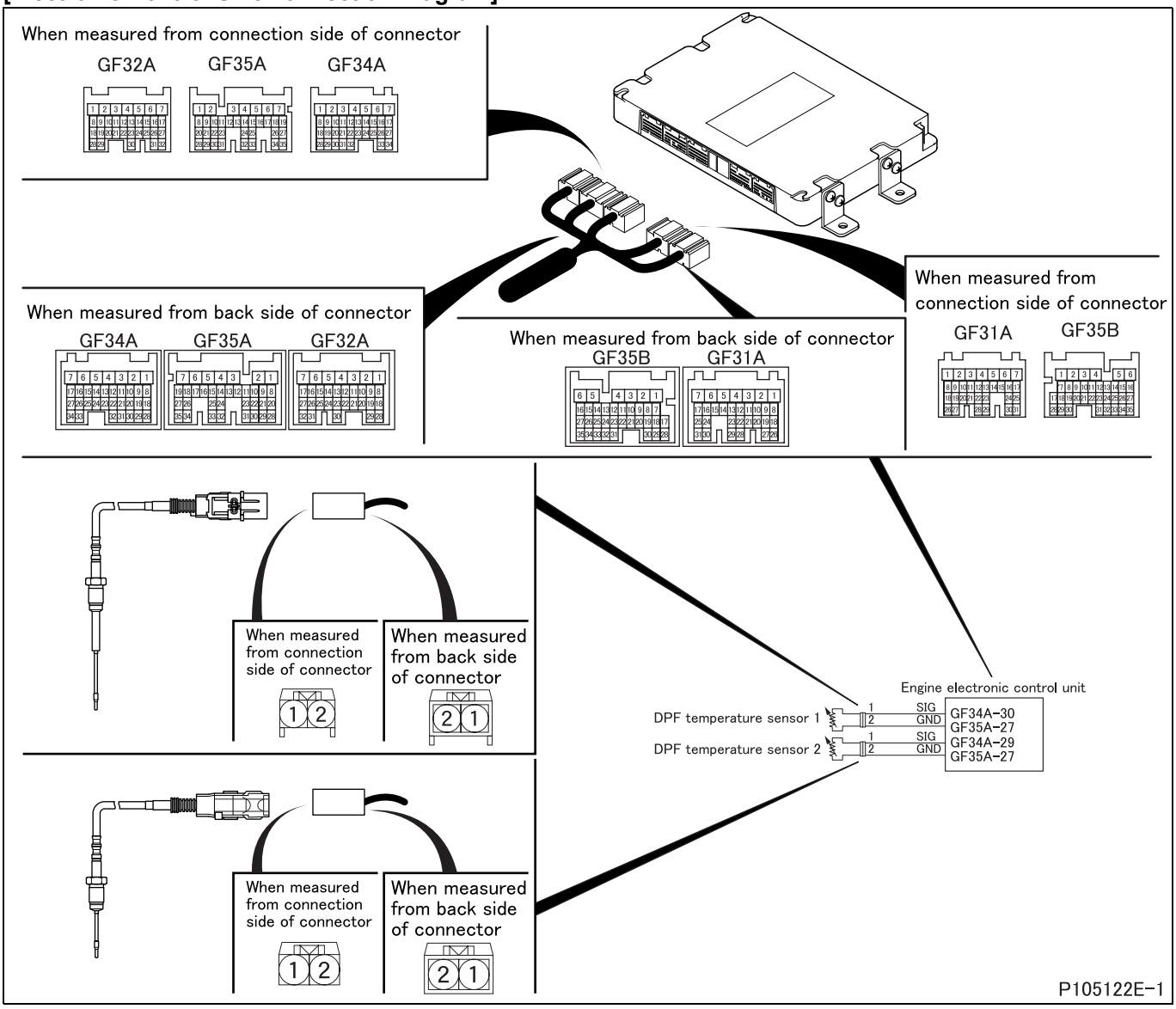

[Parts Identification and Location]

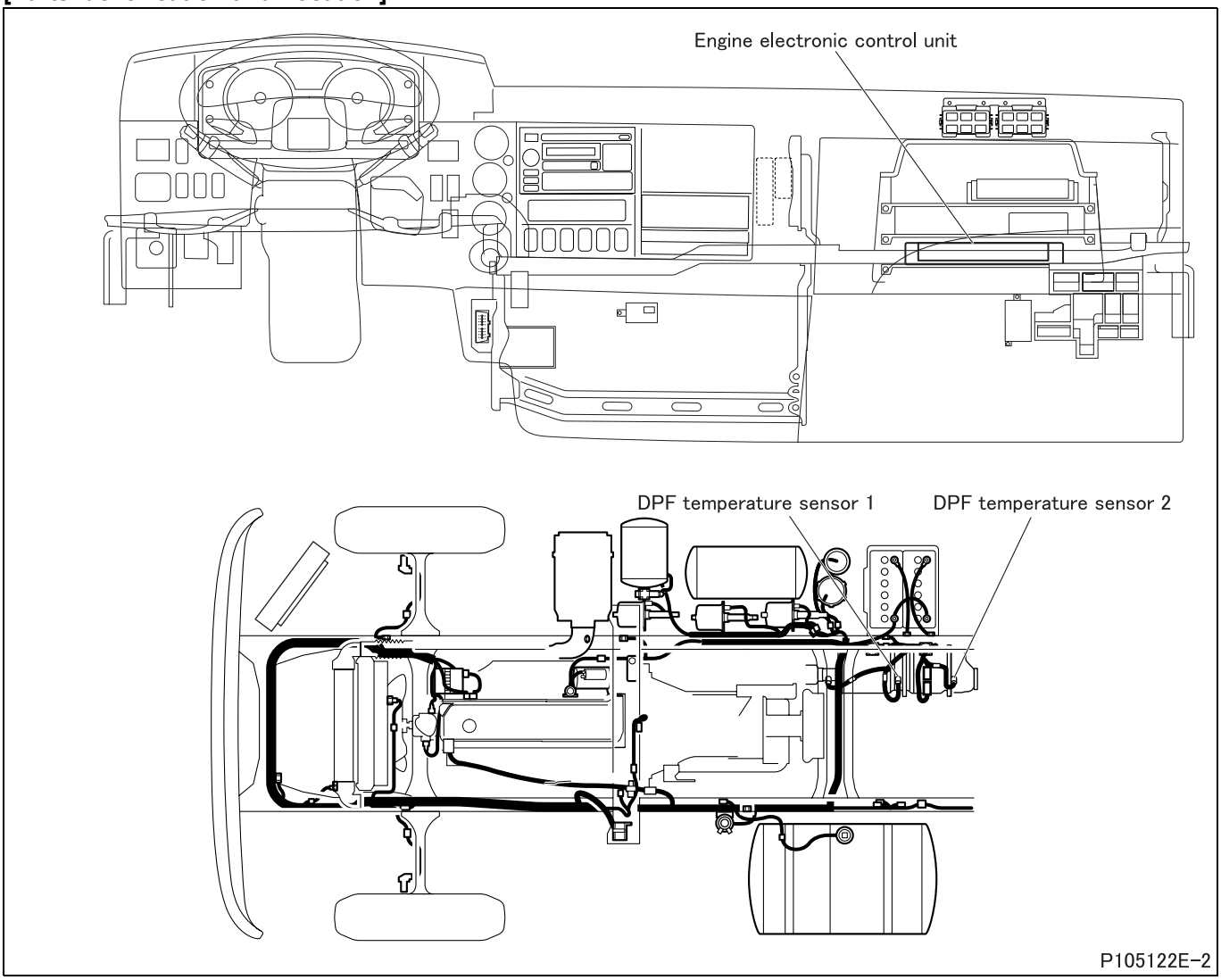

[Fault diagnosis]

- Perform checks in the sequence of the following steps.

Step 1	Inspection items		Inspection by control data
	Maintenance item		Measure item No. 30 “DPF Temperature 2 (outlet)” of Service Data.
	Inspection condition		During warm-up
	Requirements		Gradually increased
	Inspection result (Is the judging standard satisfied?)	YES	Go to transient fault (See Gr00.).
		NO	Go to step 2.

Step 2	Inspection items		Inspection by electronic control unit connector
	Maintenance item		Measure value of voltage between connector (GF34A) terminal No. 29 and (GF35A) terminal No. 27.
	Inspection condition		• Starter switch: OFF • Disconnect electronic control unit from harness and measure at vehicle side connector.
	Requirements		• 20°C {68°F} : 241.8 kΩ • 50°C {122°F} : 106.2 $^{+74.3}_{-41.8}$ kΩ • 100°C {212°F} : 33.56 $^{+17.60}_{-10.60}$ kΩ • 150°C {302°F} : 13.90 $^{+5.36}_{-3.60}$ kΩ • 200°C {392°F} : 6.896 $^{+2.064}_{-1.252}$ kΩ
	Inspection result (Is the judging standard satisfied?)	YES	Go to step 3.
		NO	Go to step 4.

Step 3	Inspection items		Inspection of electronic control unit connector
	Maintenance item		Inspection of connector
	Inspection condition		–
	Requirements		• Connector is properly connected. • No trace of water entry is found. • No corrosion is found in terminal. • Connection to terminal is appropriate.
	Inspection result (Is the judging standard satisfied?)	YES	Go to step 8.
		NO	Modify connector.

Step 4	Inspection items		Inspection of sensor connector
	Maintenance item		Inspection of connector
	Inspection condition		–
	Requirements		• Connector is properly connected. • No trace of water entry is found. • No corrosion is found in terminal. • Connection to terminal is appropriate.
	Inspection result (Is the judging standard satisfied?)	YES	Go to step 5.
		NO	Modify connector.

Step 5	Inspection items		Inspection of DPF temperature sensor 2 unit
	Maintenance item		Measure value of resistance between connector terminals No. 1 and 2.
	Inspection condition		• Put DPF temperature sensor 2 in vessel filled with engine oil. • Heat the oil to each of the specified temperatures. Stir the oil well while doing so.
	Requirements		• 20°C {68°F} : 241.8 kΩ • 50°C {122°F} : 106.2 $^{+74.3}_{-41.8}$ kΩ • 100°C {212°F} : 33.56 $^{+17.60}_{-10.60}$ kΩ • 150°C {302°F} : 13.90 $^{+5.36}_{-3.60}$ kΩ • 200°C {392°F} : 6.896 $^{+2.064}_{-1.252}$ kΩ
	Inspection result (Is the judging standard satisfied?)	YES	Go to step 6.
		NO	Replacement of sensor

<Step 5 inspection diagram>

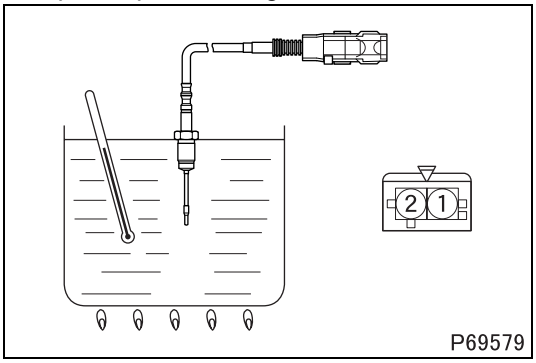

Step 6	Inspection items		Inspection of harness between electronic control unit and sensor (power supply)
	Maintenance item		Check circuit between electronic control unit connector (GF34A) terminal No. 29 and sensor connector terminal No. 1.
	Inspection condition		Disconnect each device from harness and measure from connection side of harness connector.
	Requirements		There is continuity.
	Inspection result (Is the judging standard satisfied?)	YES	Go to step 7.
		NO	Modify harness.

Step 7	Inspection items		Inspection of harness between electronic control unit and sensor (ground)
	Maintenance item		Check circuit between electronic control unit connector (GF35A) terminal No. 27 and sensor connector terminal No. 2.
	Inspection condition		Disconnect each device from harness and measure from connection side of harness connector.
	Requirements		There is continuity.
	Inspection result (Is the judging standard satisfied?)	YES	Go to step 8.
		NO	Modify harness.

Step 8	Inspection items		Inspection by control data
	Maintenance item		Measure item No. 30 “DPF Temperature 2 (outlet)” of Service Data.
	Inspection condition		During warm-up
	Requirements		Gradually increased
	Inspection result (Is the judging standard satisfied?)	YES	Go to transient fault (See Gr00.).
		NO	Replacement of electronic control unit

[Fault code]
Diagnosis code: P2033/Flash code: 88
[Monitor]
Abnormality of DPF temperature sensor 2
[Fault (outline)]
High signal range check
[Diagnosis check]
- Output voltage of DPF temperature sensor 2 is monitored.

[Code generation condition]
- Voltage of DPF temperature sensor 2 remains over 4.96 V for approx. 3 minutes.
  (Warning lamp is lit and diagnosis code is displayed on second establishment of code generation condition.)

[Diagnosis check timing]
- When code generation condition is established after starter switch ON

[Diagnostic requirement]
- 2 seconds passed after starter switch ON
- 2 seconds passed after cranking
- Battery voltage: normal
- Engine in operation
- Engine speed: more than 1200 rpm
- Injection quantity: more than 25 mm^3/st
- Water temperature: more than –7°C {19°F}

[Control effected by electronic control unit during fault]
- Control is carried out using backup value (200°C {392°F}).

[Probable cause of trouble]
- Open-circuit or short-circuit of harness between electronic control unit and DPF temperature sensor 2
- Abnormality of each connector
- Abnormality of DPF temperature sensor 2
- Abnormality in electronic control unit

[Recoverability]
<Control during fault>
- Recovered if signal becomes normal with starter switch in ON position.

<Warning lamp>
- Extinguished at 4th driving cycle after normal signal is input.

<Fault code>
- Automatically cleared at 40th warm up cycle after warning lamp is extinguished.
  (To clear as desired, erase from the memory.)

Driving cycle : “Starter switch ON to start engine till starter switch OFF” constitutes 1 driving cycle.
Warm up cycle : “Starter switch ON to start engine till starter switch OFF after coolant temperature increased and engine warmed up” constitutes 1 warm up cycle.

[Electronic Control Unit Connection Diagram]

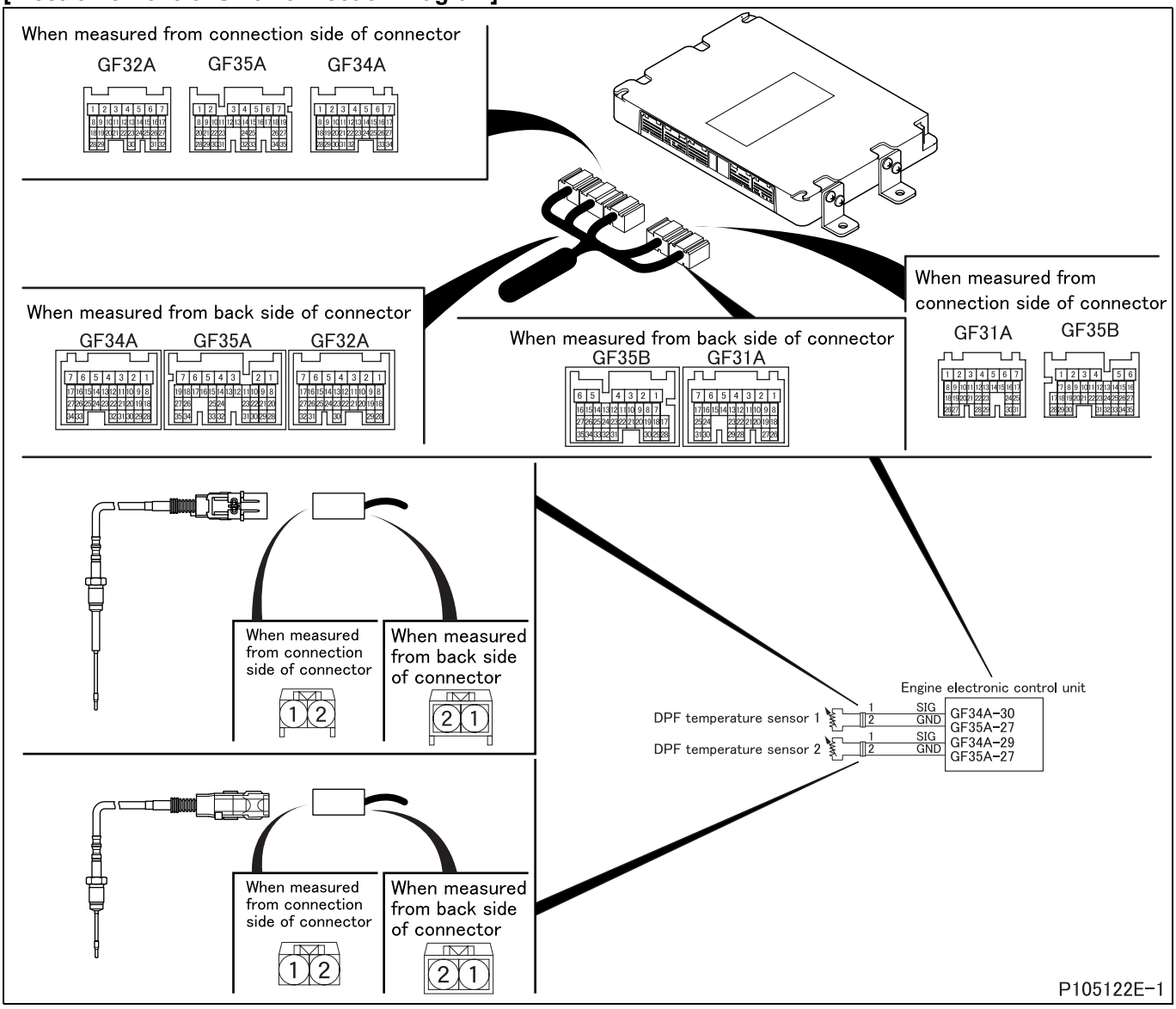

[Parts Identification and Location]

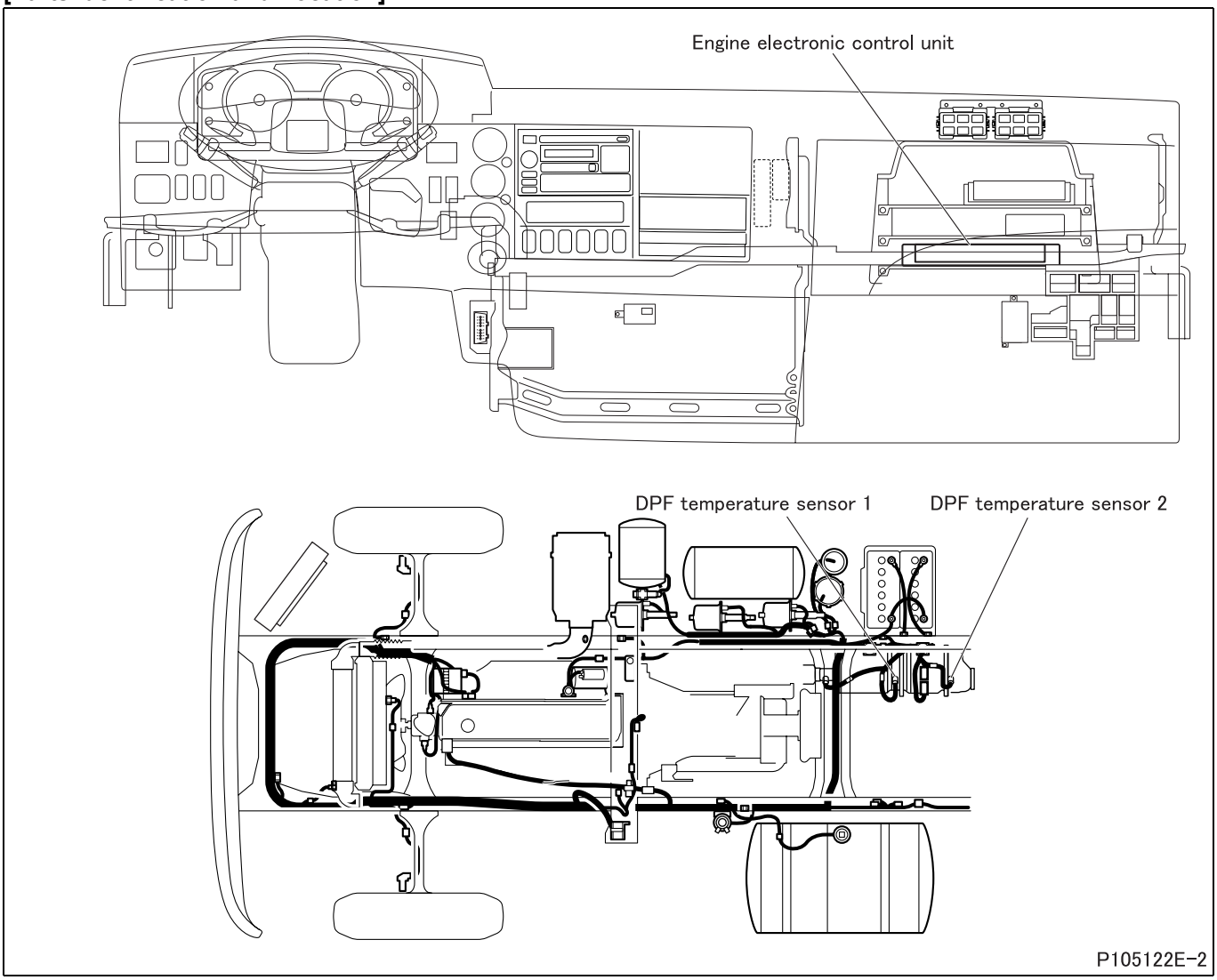

[Fault diagnosis]

- Perform checks in the sequence of the following steps.

Step 1	Inspection items		Inspection by control data
	Maintenance item		Measure item No. 30 “DPF Temperature 2 (outlet)” of Service Data.
	Inspection condition		During warm-up
	Requirements		Gradually increased
	Inspection result (Is the judging standard satisfied?)	YES	Go to transient fault (See Gr00.).
		NO	Go to step 2.

Step 2	Inspection items		Inspection by electronic control unit connector
	Maintenance item		Measure value of voltage between connector (GF34A) terminal No. 29 and (GF35A) terminal No. 27.
	Inspection condition		• Starter switch: OFF • Disconnect electronic control unit from harness and measure at vehicle side connector.
	Requirements		• 20°C {68°F} : 241.8 kΩ • 50°C {122°F} : 106.2 $^{+74.3}_{-41.8}$ kΩ • 100°C {212°F} : 33.56 $^{+17.60}_{-10.60}$ kΩ • 150°C {302°F} : 13.90 $^{+5.36}_{-3.60}$ kΩ • 200°C {392°F} : 6.896 $^{+2.064}_{-1.252}$ kΩ
	Inspection result (Is the judging standard satisfied?)	YES	Go to step 3.
		NO	Go to step 4.

Step 3	Inspection items		Inspection of electronic control unit connector
	Maintenance item		Inspection of connector
	Inspection condition		–
	Requirements		• Connector is properly connected. • No trace of water entry is found. • No corrosion is found in terminal. • Connection to terminal is appropriate.
	Inspection result (Is the judging standard satisfied?)	YES	Go to step 8.
		NO	Modify connector.

Step 4	Inspection items		Inspection of sensor connector
	Maintenance item		Inspection of connector
	Inspection condition		–
	Requirements		• Connector is properly connected. • No trace of water entry is found. • No corrosion is found in terminal. • Connection to terminal is appropriate.
	Inspection result (Is the judging standard satisfied?)	YES	Go to step 5.
		NO	Modify connector.

Step 5	Inspection items		Inspection of DPF temperature sensor 2 unit
	Maintenance item		Measure value of resistance between connector terminals No. 1 and 2.
	Inspection condition		• Put DPF temperature sensor 2 in vessel filled with engine oil. • Heat the oil to each of the specified temperatures. Stir the oil well while doing so.
	Requirements		• 20°C {68°F} : 241.8 kΩ • 50°C {122°F} : 106.2 $^{+74.3}_{-41.8}$ kΩ • 100°C {212°F} : 33.56 $^{+17.60}_{-10.60}$ kΩ • 150°C {302°F} : 13.90 $^{+5.36}_{-3.60}$ kΩ • 200°C {392°F} : 6.896 $^{+2.064}_{-1.252}$ kΩ
	Inspection result (Is the judging standard satisfied?)	YES	Go to step 6.
		NO	Replacement of sensor

<Step 5 inspection diagram>

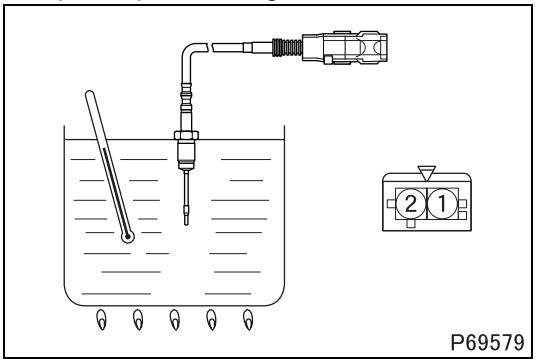

Step 6	Inspection items		Inspection of harness between electronic control unit and sensor (power supply)
	Maintenance item		Check circuit between electronic control unit connector (GF34A) terminal No. 29 and sensor connector terminal No. 1.
	Inspection condition		Disconnect each device from harness and measure from connection side of harness connector.
	Requirements		There is continuity.
	Inspection result (Is the judging standard satisfied?)	YES	Go to step 7.
		NO	Modify harness.

Step 7	Inspection items		Inspection of harness between electronic control unit and sensor (ground)
	Maintenance item		Check circuit between electronic control unit connector (GF35A) terminal No. 27 and sensor connector terminal No. 2.
	Inspection condition		Disconnect each device from harness and measure from connection side of harness connector.
	Requirements		There is continuity.
	Inspection result (Is the judging standard satisfied?)	YES	Go to step 8.
		NO	Modify harness.

Step 8	Inspection items		Inspection by control data
	Maintenance item		Measure item No. 30 “DPF Temperature 2 (outlet)” of Service Data.
	Inspection condition		During warm-up
	Requirements		Gradually increased
	Inspection result (Is the judging standard satisfied?)	YES	Go to transient fault (See Gr00.).
		NO	Replacement of electronic control unit

[Fault code]
Diagnosis code: P2080/Flash code: 13
[Monitor]
Relative check between catalytic temperature sensor and DPF temperature sensor 1
[Fault (outline)]
Gain and offset drift
[Diagnosis check]
- Temperature detected by catalytic temperature sensor and DPF temperature sensor 1 during stop of diesel particulate filter regeneration function (with vehicle in normal condition) are compared for difference within specified limits.

[Code generation condition]
- Operation remains for approx. 20 seconds with temperature difference over 60°C {140°F}.
  (Warning lamp is lit and diagnosis code is displayed on second establishment of code generation condition.)

[Diagnosis check timing]
- When code generation condition is established after starter switch ON

[Diagnostic requirement]
- 2 seconds passed after starter switch ON
- 2 seconds passed after cranking
- Battery voltage: normal
- Diesel particulate filter regeneration control: not effected
- Fuel injection status: normal
- Engine running time: more than 300 seconds
- Engine control map: normal
- Catalytic temperature sensor: normal in output signal
- DPF temperature sensor 1: normal in output signal
- Time during which judgment conditions are maintained: 35 seconds

[Control effected by electronic control unit during fault]
- Effects no special control.

[Probable cause of trouble]
<If diagnosis code P0284 was not recorded at the same time>
- Abnormality of catalytic temperature sensor

<If diagnosis code P0284 was recorded at the same time>
- Abnormality of DPF temperature sensor 1

[Recoverability]
<Control during fault>
- Recovered if signal becomes normal with starter switch in ON position.

<Warning lamp>
- Extinguished at 4th driving cycle after normal signal is input.

<Fault code>
- Automatically cleared at 40th warm up cycle after warning lamp is extinguished.
  (To clear as desired, erase from the memory.)

Driving cycle : “Starter switch ON to start engine till starter switch OFF” constitutes 1 driving cycle.
Warm up cycle : “Starter switch ON to start engine till starter switch OFF after coolant temperature increased and engine warmed up” constitutes 1 warm up cycle.

[Fault code]
Diagnosis code: P2084/Flash code: 87
[Monitor]
Relative check between DPF temperature sensor 1 and 2
[Fault (outline)]
Gain and offset drift
[Diagnosis check]
- Temperature detected by DPF temperature sensor 2 and DPF temperature sensor 1 during stop of diesel particulate filter regeneration function (with vehicle in normal condition) are compared for difference within specified limits.

[Code generation condition]
- Operation remains for approx. 10 seconds with temperature difference over 90°C {162°F}.
  (Warning lamp is lit and diagnosis code is displayed on second establishment of code generation condition.)

[Diagnosis check timing]
- When code generation condition is established after starter switch ON

[Diagnostic requirement]
- 2 seconds passed after starter switch ON
- 2 seconds passed after cranking
- Battery voltage: normal
- Diesel particulate filter regeneration control: not effected (before elapse of 900 seconds)
- Fuel injection status: normal
- Engine control map: normal
- DPF temperature sensor 1: normal in output signal
- DPF temperature sensor 2: normal in output signal
- Time during which judgment conditions are maintained: longer than 300 seconds

[Control effected by electronic control unit during fault]
- Effects no special control.

[Probable cause of trouble]
<If diagnosis code P0284 was not recorded at the same time>
- Abnormality of DPF temperature sensor 1

<If diagnosis code P0284 was recorded at the same time>
- Abnormality of DPF temperature sensor 2

[Recoverability]
<Control during fault>
- Recovered if signal becomes normal with starter switch in ON position.

<Warning lamp>
- Extinguished at 4th driving cycle after normal signal is input.

<Fault code>
- Automatically cleared at 40th warm up cycle after warning lamp is extinguished.
  (To clear as desired, erase from the memory.)

Driving cycle : “Starter switch ON to start engine till starter switch OFF” constitutes 1 driving cycle.
Warm up cycle : “Starter switch ON to start engine till starter switch OFF after coolant temperature increased and engine warmed up” constitutes 1 warm up cycle.

[Fault code]
Diagnosis code: P2102/Flash code: 28
[Monitor]
Abnormality of intake throttle (actuator)
[Fault (outline)]
- Short circuit ground
- Open circuit
- Short circuit battery
- Actuator stuck

[Diagnosis check]
- Intake throttle driving motor is checked by throttle electronic drive unit, and sends abnormality information to engine electronic control unit through controller area network communication.

[Code generation condition]
Diagnosis code is generated under either of the following conditions.
(Warning lamp is lit and diagnosis code is displayed on first establishment of code generation condition.)
- Motor circuit remains shorted or open as detected by throttle electronic drive unit for 2 seconds.
- Motor remains stuck as detected by throttle electronic drive unit for 2 seconds.
- From electronic drive unit is sent abnormal information the total reception time of which (through controller area network 2) exceeds 6 seconds.

[Diagnosis check timing]
- When code generation condition is established after starter switch ON

[Diagnostic requirement]
- 2 seconds passed after starter switch ON
- 2 seconds passed after cranking
- Battery voltage: normal

[Control effected by electronic control unit during fault]
- Injection quantity is limited.
- Exhaust gas recirculation control is stopped.
- Throttle control is stopped.
- Diesel particulate filter regeneration (manual or automatic) is stopped.
- Fault detection for controller area network communication is stopped.

[Probable cause of trouble]
- Open-circuit or short-circuit of harness between throttle electronic drive unit and throttle actuator
- Abnormality of each connector
- Abnormality of throttle motor (built in throttle actuator)
- Abnormality of throttle position sensor (built in throttle actuator)
- Abnormality of throttle electronic drive unit
- Abnormality of electronic drive unit relay

[Recoverability]
<Control during fault>
- Recovered if signal becomes normal with starter switch in ON position.

<Warning lamp>
- Extinguished at 4th driving cycle after normal signal is input.

<Fault code>
- Automatically cleared at 40th warm up cycle after warning lamp is extinguished.
  (To clear as desired, erase from the memory.)

Driving cycle : “Starter switch ON to start engine till starter switch OFF” constitutes 1 driving cycle.
Warm up cycle : “Starter switch ON to start engine till starter switch OFF after coolant temperature increased and engine warmed up” constitutes 1 warm up cycle.

[Electronic Control Unit Connection Diagram]

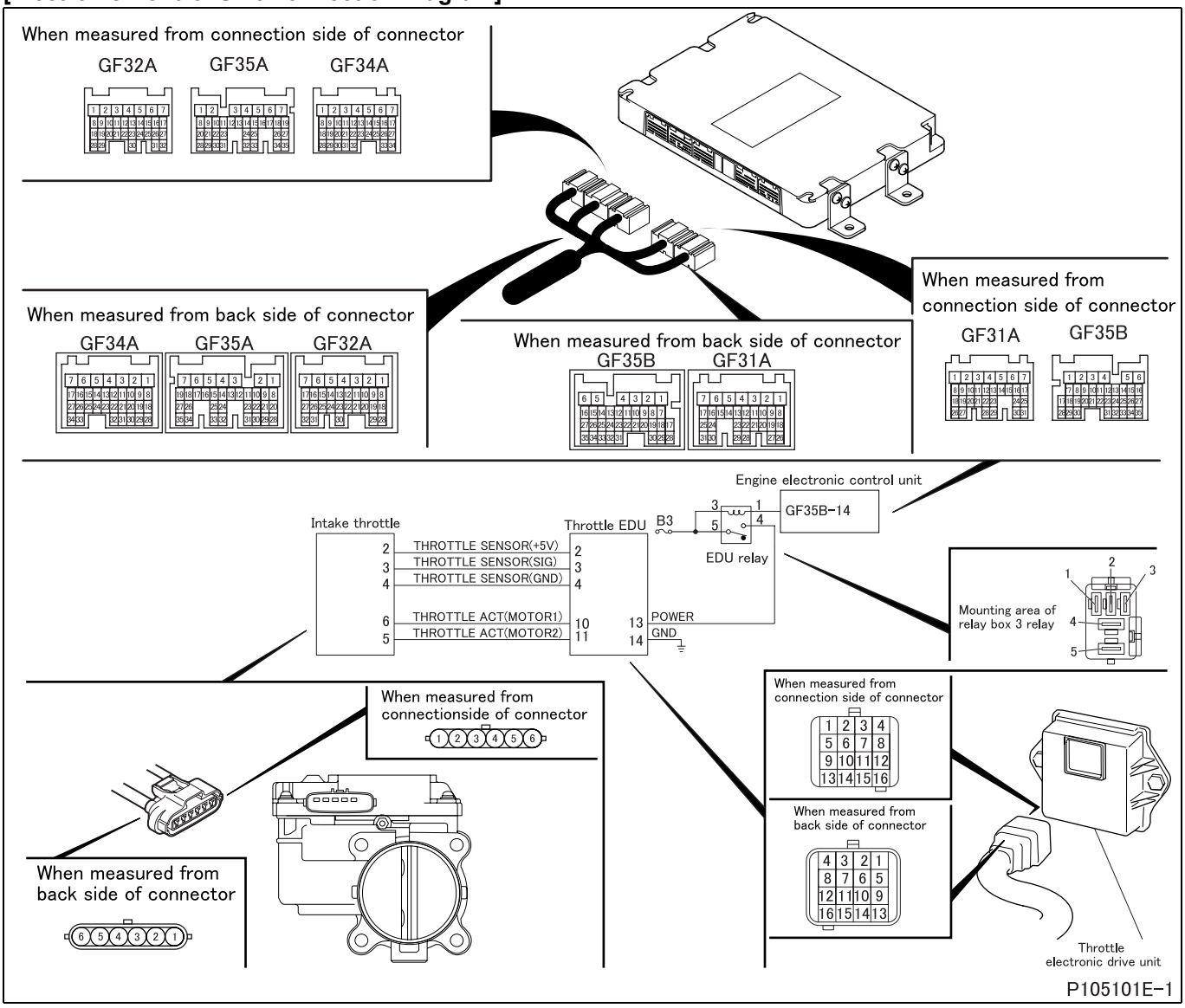

[Parts Identification and Location]

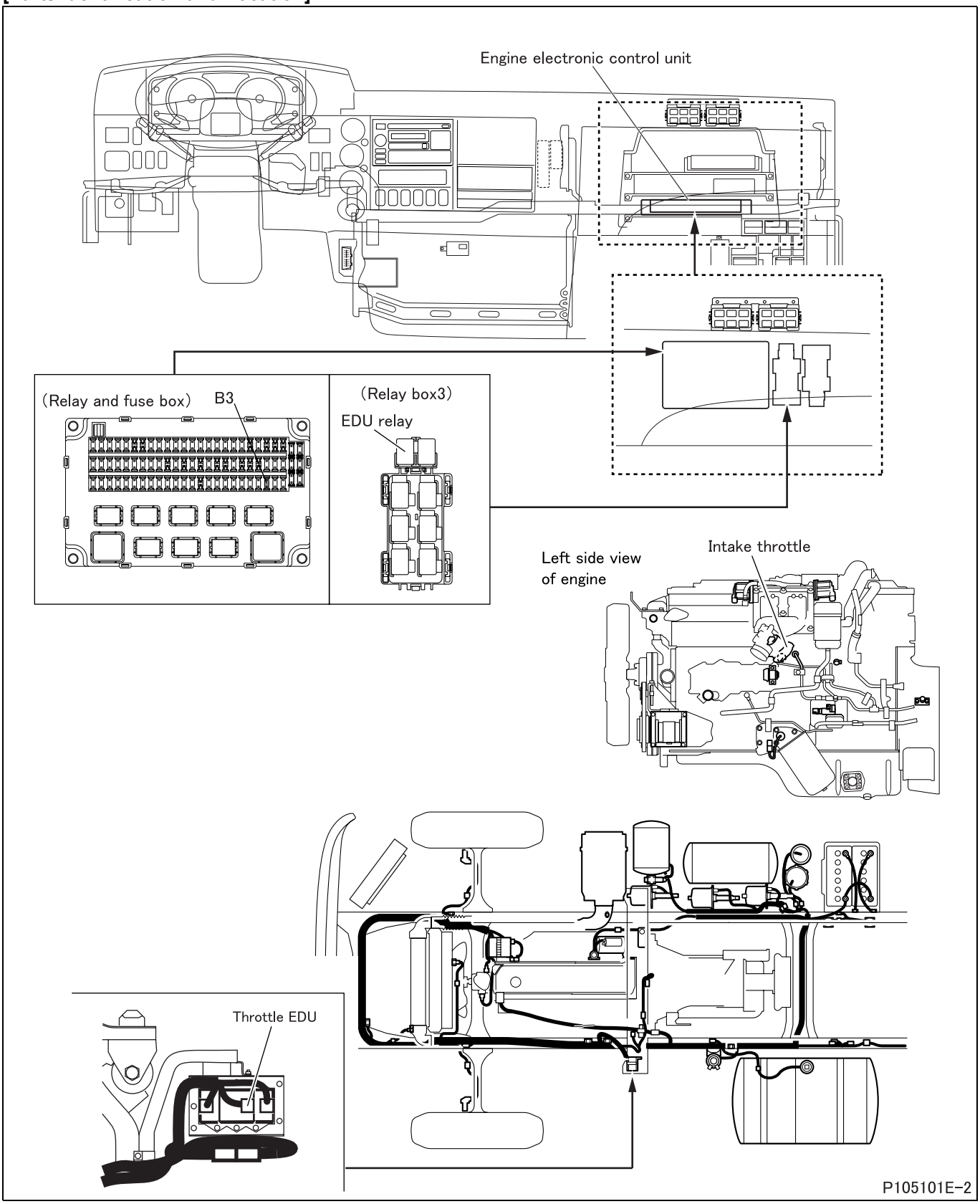

[Fault diagnosis]

- Perform checks in the sequence of the following steps.

Step 1	Inspection items		Inspection by control data
	Maintenance item		Perform actuator test item No. A7 “Intake throttle 1”.
	Inspection condition		• Vehicle: stationary (vehicle speed 0 km/h {0 MPH}) • Starter switch: ON (engine started) • Transmission: neutral
	Requirements		Actual position matches with target value set by Multi-Use Tester (check with service data “20: Intake Throttle actual position”).
	Inspection result (Is the judging standard satisfied?)	YES	Go to transient fault (See Gr00.).
		NO	Go to step 2.

Step 2	Inspection items		Inspection of electronic drive unit connector
	Maintenance item		Inspection of connector
	Inspection condition		–
	Requirements		• Connector is properly connected. • No trace of water entry is found. • No corrosion is found in terminal. • Connection to terminal is appropriate.
	Inspection result (Is the judging standard satisfied?)	YES	Go to step 3.
		NO	Modify connector.

Step 3	Inspection items		Inspection of throttle actuator connector
	Maintenance item		Inspection of connector
	Inspection condition		–
	Requirements		• Connector is properly connected. • No trace of water entry is found. • No corrosion is found in terminal. • Connection to terminal is appropriate.
	Inspection result (Is the judging standard satisfied?)	YES	Go to step 4.
		NO	Modify connector.

Step 4	Inspection items		Inspection by control data
	Maintenance item		Check if following diagnosis codes occur simultaneously. • P0685 “EDU Relay (Open)” • P0686 “EDU Relay (Low)” • P0687 “EDU Relay (High)” • P0688 “EDU Relay (Over Load)”
	Inspection condition		Starter switch: ON
	Requirements		Codes occur.
	Inspection result (Is the judging standard satisfied?)	YES	Inspect diagnosis code that is occurring.
		NO	Go to step 5.

Step 5	Inspection items		Inspection of electronic drive unit connector (power supply)
	Maintenance item		Measure value of voltage between connector terminal No. 13 (+) and 14 (–).
	Inspection condition		• Disconnect connector and measure from harness side. • Starter switch: ON • Perform actuator test item No. A9 “EDU Relay”.
	Requirements		Same as battery voltage.
	Inspection result (Is the judging standard satisfied?)	YES	Go to step 10.
		NO	Go to step 6.

Step 6	Inspection items		Inspection of relay connector
	Maintenance item		Inspection of connector
	Inspection condition		–
	Requirements		• Connector is properly connected. • No trace of water entry is found. • No corrosion is found in terminal. • Connection to terminal is appropriate.
	Inspection result (Is the judging standard satisfied?)	YES	Go to step 7.
		NO	Modify connector.

Step 7	Inspection items		Inspection of harness between fuse and relay
	Maintenance item		Check circuit between fuse No. B3 and relay connector terminal No. 5.
	Inspection condition		Disconnect each device from harness and measure from connection side of harness connector.
	Requirements		There is continuity.
	Inspection result (Is the judging standard satisfied?)	YES	Go to step 8.
		NO	Modify harness.

Step 8	Inspection items		Inspection of harness between relay and electronic drive unit
	Maintenance item		Check circuit between relay connector terminal No. 4 and electronic drive unit connector terminal No. 13.
	Inspection condition		Disconnect each device from harness and measure from connection side of harness connector.
	Requirements		There is continuity.
	Inspection result (Is the judging standard satisfied?)	YES	After replacement of relay, go to step 9
		NO	Modify harness.

Step 9	Inspection items		Inspection of harness between electronic drive unit and ground
	Maintenance item		Check circuit between following electronic drive unit connector terminals. • Electronic drive unit ground: terminal No. 14 - chassis ground • Sensor ground: terminal No. 4 and 14
	Inspection condition		Disconnect each device from harness and measure from connection side of harness connector.
	Requirements		There is continuity.
	Inspection result (Is the judging standard satisfied?)	YES	Go to step 10.
		NO	Modify harness.

Step 10	Inspection items		Inspection of electronic drive unit connector (motor)
	Maintenance item		Measure value of resistance between connector terminal No. 10 and 11.
	Inspection condition		Disconnect connector and measure from harness side.
	Requirements		0.3 to 80 Ω
	Inspection result (Is the judging standard satisfied?)	YES	Go to step 13.
		NO	Go to step 11.

Step 11	Inspection items		Inspection of harness between electronic drive unit and throttle actuator (motor)
	Maintenance item		Check circuit between following connector terminals. • Motor (1): electronic drive unit connector terminal No. 10 - throttle actuator connector terminal No. 6 • Motor (2): electronic drive unit connector terminal No. 11 - throttle actuator connector terminal No. 5
	Inspection condition		Disconnect each device from harness and measure from connection side of harness connector.
	Requirements		There is continuity.
	Inspection result (Is the judging standard satisfied?)	YES	Go to step 12.
		NO	Modify harness.

Step 12	Inspection items		Inspection of throttle actuator unit (motor)
	Maintenance item		Measure value of resistance between connector terminals No. 5 and 6.
	Inspection condition		• Keep throttle actuator installed on vehicle. • Disconnect connector and measure throttle actuator side.
	Requirements		0.3 to 80 Ω
	Inspection result (Is the judging standard satisfied?)	YES	Go to step 13.
		NO	Replacement of throttle actuator

<Step 12 inspection diagram>

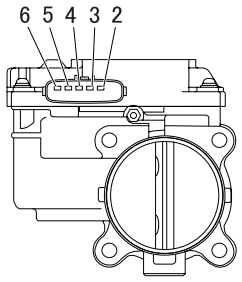

P104212

Step 13	Inspection items		Inspection of throttle actuator connector (position sensor: power supply)
	Maintenance item		Measure value of voltage between connector terminals No. 2 (+) and 4 (–).
	Inspection condition		• Measure from back side of harness connector with each device connected to harness. • Starter switch: ON
	Requirements		5 V
	Inspection result (Is the judging standard satisfied?)	YES	Go to step 14.
		NO	Go to step 15.

Step 14	Inspection items		Inspection of electronic drive unit connector (position sensor: signal)
	Maintenance item		Measure value of voltage between connector terminals No. 3 (+) and 4 (–).
	Inspection condition		• Measure from back side of harness connector with each device connected to harness. • Starter switch: ON • Perform actuator test item No. A7 “Intake throttle 1”.
	Requirements		• Valve fully closed: 0.5 V • Valve fully opened: 4.375 V
	Inspection result (Is the judging standard satisfied?)	YES	Go to step 16.
		NO	Go to step 15.

Step 15	Inspection items		Inspection of harness between electronic drive unit and throttle actuator (position sensor)
	Maintenance item		Check circuit between following connector terminals. • Sensor (power supply): electronic drive unit connector terminal No. 2 - throttle actuator connector terminal No. 2 • Sensor (signal): electronic drive unit connector terminal No. 3 - throttle actuator connector terminal No. 3 • Sensor (ground): electronic drive unit connector terminal No. 4 - throttle actuator connector terminal No. 4
	Inspection condition		Disconnect each device from harness and measure from connection side of harness connector.
	Requirements		There is continuity.
	Inspection result (Is the judging standard satisfied?)	YES	After replacement of throttle actuator, go to step 16.
		NO	Modify harness.

Step 16	Inspection items		Inspection by control data
	Maintenance item		Perform actuator test item No. A7 “Intake throttle 1”.
	Inspection condition		• Vehicle: stationary (vehicle speed 0 km/h {0 MPH}) • Starter switch: ON (engine started) • Transmission: neutral
	Requirements		Actual position matches with target value set by Multi-Use Tester (check with service data “20: Intake Throttle actual position”).
	Inspection result (Is the judging standard satisfied?)	YES	Go to transient fault (See Gr00.).
		NO	Replacement of electronic drive unit

[Fault code]
Diagnosis code: P2108/Flash code: 96
[Monitor]
Abnormality of intake throttle (target abnormality)
[Fault (outline)]
Target out of range
[Diagnosis check]
- Opening of intake throttle butterfly valve is detected as actual stop opening by throttle electronic drive unit through throttle position sensor is compared with target opening for control by engine electronic control unit.

[Code generation condition]
- Target valve position calculated by throttle electronic drive unit remains deviating from specified limits (16 to 241) for 1 second.
  (Warning lamp is lit and diagnosis code is displayed on first establishment of code generation condition.)
- From electronic drive unit is sent abnormal information the total reception time of which (through controller area network 2) exceeds 6 seconds.

[Diagnosis check timing]
- When code generation condition is established after starter switch ON

[Diagnostic requirement]
- 2 seconds passed after starter switch ON
- 2 seconds passed after cranking
- Battery voltage: normal

[Control effected by electronic control unit during fault]
- Injection quantity is limited.
- Exhaust gas recirculation control is stopped.
- Throttle control is stopped.
- Diesel particulate filter regeneration (manual or automatic) is stopped.

[Probable cause of trouble]
- Open-circuit or short-circuit of harness between throttle electronic drive unit and throttle actuator
- Abnormality of each connector
- Abnormality of throttle motor (built in throttle actuator)
- Abnormality of throttle position sensor (built in throttle actuator)
- Abnormality of throttle electronic drive unit
- Abnormality of electronic drive unit relay

[Recoverability]
<Control during fault>
- Recovered if signal becomes normal with starter switch in ON position.

<Warning lamp>
- Extinguished at 4th driving cycle after normal signal is input.

<Fault code>
- Automatically cleared at 40th warm up cycle after warning lamp is extinguished.
  (To clear as desired, erase from the memory.)

Driving cycle : “Starter switch ON to start engine till starter switch OFF” constitutes 1 driving cycle.
Warm up cycle : “Starter switch ON to start engine till starter switch OFF after coolant temperature increased and engine warmed up” constitutes 1 warm up cycle.

[Electronic Control Unit Connection Diagram]

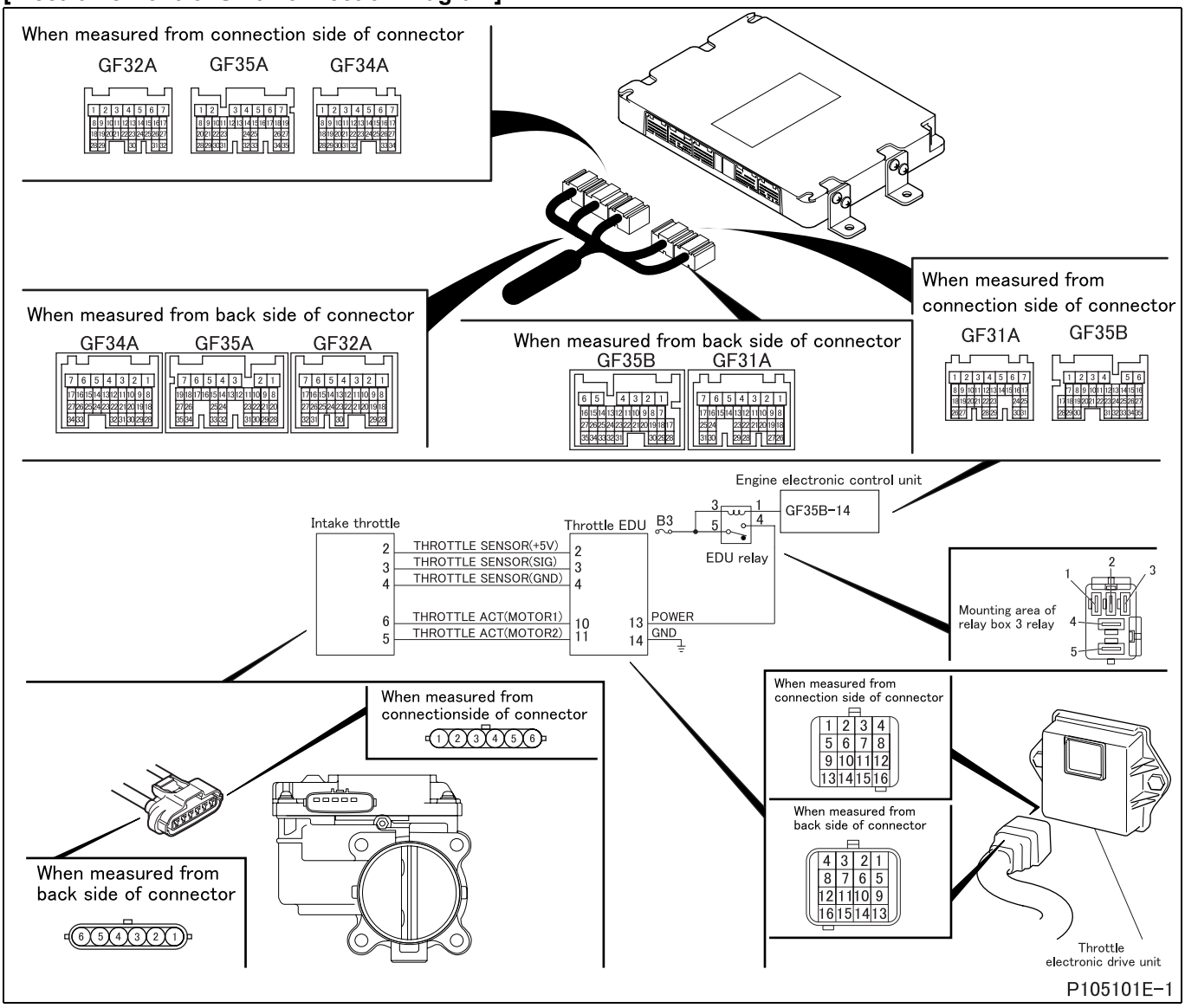

[Parts Identification and Location]

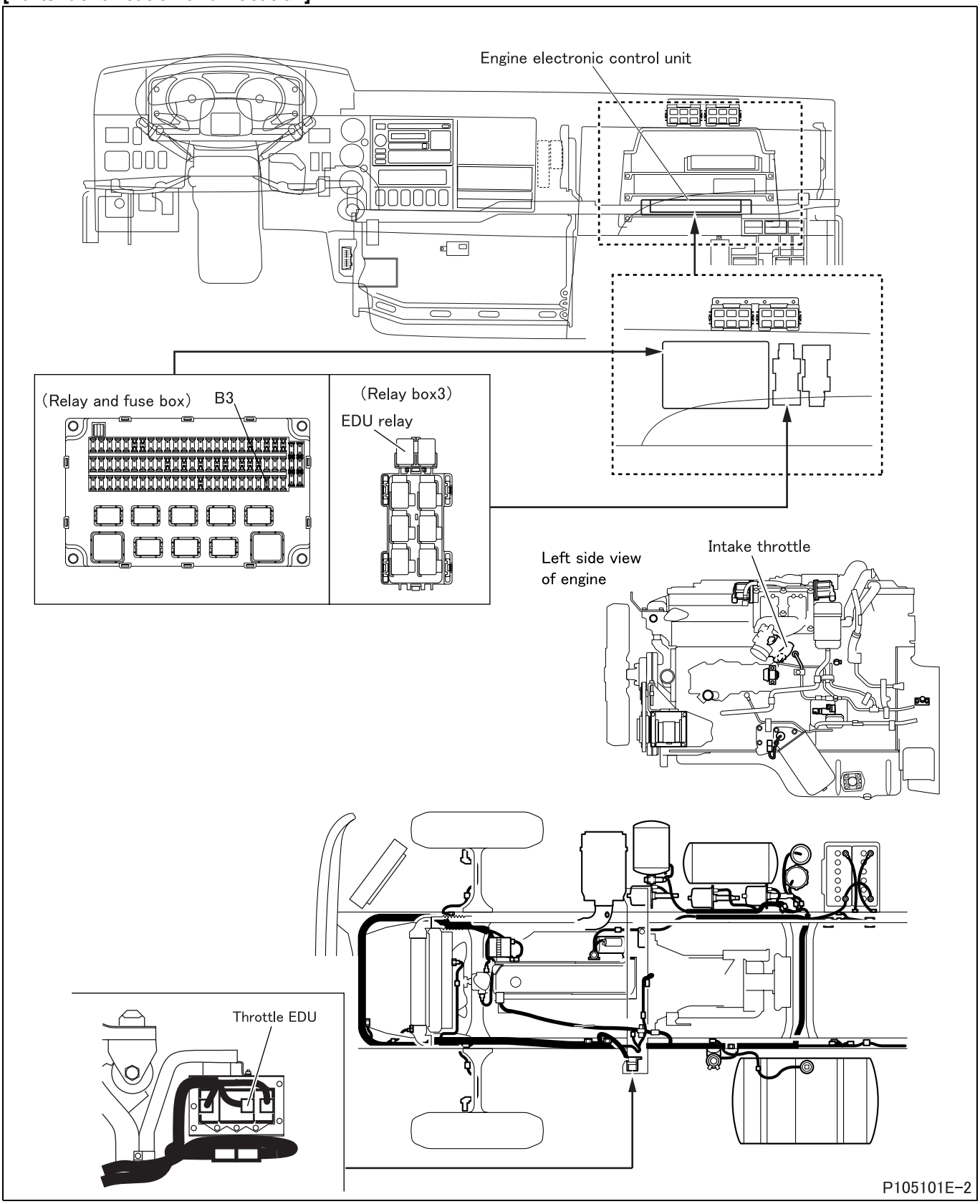

[Fault diagnosis]

- Perform checks in the sequence of the following steps.

Step 1	Inspection items		Inspection by control data
	Maintenance item		Perform actuator test item No. A7 “Intake throttle 1”.
	Inspection condition		• Vehicle: stationary (vehicle speed 0 km/h {0 MPH}) • Starter switch: ON (engine started) • Transmission: neutral
	Requirements		Actual position matches with target value set by Multi-Use Tester (check with service data “20: Intake Throttle actual position”).
	Inspection result (Is the judging standard satisfied?)	YES	Go to transient fault (See Gr00.).
		NO	Go to step 2.

Step 2	Inspection items		Inspection of electronic drive unit connector
	Maintenance item		Inspection of connector
	Inspection condition		–
	Requirements		• Connector is properly connected. • No trace of water entry is found. • No corrosion is found in terminal. • Connection to terminal is appropriate.
	Inspection result (Is the judging standard satisfied?)	YES	Go to step 3.
		NO	Modify connector.

Step 3	Inspection items		Inspection of throttle actuator connector
	Maintenance item		Inspection of connector
	Inspection condition		–
	Requirements		• Connector is properly connected. • No trace of water entry is found. • No corrosion is found in terminal. • Connection to terminal is appropriate.
	Inspection result (Is the judging standard satisfied?)	YES	Go to step 4.
		NO	Modify connector.

Step 4	Inspection items		Inspection by control data
	Maintenance item		Check if following diagnosis codes occur simultaneously. • P0685 “EDU Relay (Open)” • P0686 “EDU Relay (Low)” • P0687 “EDU Relay (High)” • P0688 “EDU Relay (Over Load)”
	Inspection condition		Starter switch: ON
	Requirements		Codes occur.
	Inspection result (Is the judging standard satisfied?)	YES	Inspect diagnosis code that is occurring.
		NO	Go to step 5.

Step 5	Inspection items		Inspection of electronic drive unit connector (power supply)
	Maintenance item		Measure value of voltage between connector terminal No. 13 (+) and 14 (–).
	Inspection condition		• Disconnect connector and measure from harness side. • Starter switch: ON • Perform actuator test item No. A9 “EDU Relay”.
	Requirements		Same as battery voltage.
	Inspection result (Is the judging standard satisfied?)	YES	Go to step 10.
		NO	Go to step 6.

Step 6	Inspection items		Inspection of relay connector
	Maintenance item		Inspection of connector
	Inspection condition		–
	Requirements		• Connector is properly connected. • No trace of water entry is found. • No corrosion is found in terminal. • Connection to terminal is appropriate.
	Inspection result (Is the judging standard satisfied?)	YES	Go to step 7.
		NO	Modify connector.

Step 7	Inspection items		Inspection of harness between fuse and relay
	Maintenance item		Check circuit between fuse No. B3 and relay connector terminal No. 5.
	Inspection condition		Disconnect each device from harness and measure from connection side of harness connector.
	Requirements		There is continuity.
	Inspection result (Is the judging standard satisfied?)	YES	Go to step 8.
		NO	Modify harness.

Step 8	Inspection items		Inspection of harness between relay and electronic drive unit
	Maintenance item		Check circuit between relay connector terminal No. 4 and electronic drive unit connector terminal No. 13.
	Inspection condition		Disconnect each device from harness and measure from connection side of harness connector.
	Requirements		There is continuity.
	Inspection result (Is the judging standard satisfied?)	YES	After replacement of relay, go to step 9.
		NO	Modify harness.

Step 9	Inspection items		Inspection of harness between electronic drive unit and ground
	Maintenance item		Check circuit between following electronic drive unit connector terminals. • Electronic drive unit ground: terminal No. 14 - chassis ground • Sensor ground: terminal No. 4 and 14
	Inspection condition		Disconnect each device from harness and measure from connection side of harness connector.
	Requirements		There is continuity.
	Inspection result (Is the judging standard satisfied?)	YES	Go to step 10.
		NO	Modify harness.

Step 10	Inspection items		Inspection of electronic drive unit connector (motor)
	Maintenance item		Measure value of resistance between connector terminal No. 10 and 11.
	Inspection condition		Disconnect connector and measure from harness side.
	Requirements		0.3 to 80 Ω
	Inspection result (Is the judging standard satisfied?)	YES	Go to step 13.
		NO	Go to step 11.

Step 11	Inspection items		Inspection of harness between electronic drive unit and throttle actuator (motor)
	Maintenance item		Check circuit between following connector terminals. • Motor (1): electronic drive unit connector terminal No. 10 - throttle actuator connector terminal No. 6 • Motor (2): electronic drive unit connector terminal No. 11 - throttle actuator connector terminal No. 5
	Inspection condition		Disconnect each device from harness and measure from connection side of harness connector.
	Requirements		There is continuity.
	Inspection result (Is the judging standard satisfied?)	YES	Go to step 12.
		NO	Modify harness.

Step 12	Inspection items		Inspection of throttle actuator unit (motor)
	Maintenance item		Measure value of resistance between connector terminals No. 5 and 6.
	Inspection condition		• Keep throttle actuator installed on vehicle. • Disconnect connector and measure throttle actuator side.
	Requirements		0.3 to 80 Ω
	Inspection result (Is the judging standard satisfied?)	YES	Go to step 13.
		NO	Replacement of throttle actuator

<Step 12 inspection diagram>

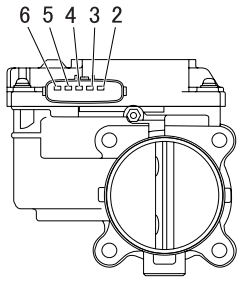

P104212

Step 13	Inspection items		Inspection of throttle actuator connector (position sensor: power supply)
	Maintenance item		Measure value of voltage between connector terminal No. 2 (+) and 4 (–).
	Inspection condition		• Measure from back side of harness connector with each device connected to harness. • Starter switch: ON
	Requirements		5 V
	Inspection result (Is the judging standard satisfied?)	YES	Go to step 14.
		NO	Go to step 15.

Step 14	Inspection items		Inspection of electronic drive unit connector (position sensor: signal)
	Maintenance item		Measure value of voltage between connector terminals No. 3 (+) and 4 (–).
	Inspection condition		• Measure from back side of harness connector with each device connected to harness. • Starter switch: ON • Perform actuator test item No. A7 “Intake throttle 1”.
	Requirements		• Valve fully closed: 0.5 V • Valve fully opened: 4.375 V
	Inspection result (Is the judging standard satisfied?)	YES	Go to step 16.
		NO	Go to step 15.

Step 15	Inspection items		Inspection of harness between electronic drive unit and throttle actuator (position sensor)
	Maintenance item		Check circuit between following connector terminals. • Sensor (power supply): electronic drive unit connector terminal No. 2 - throttle actuator connector terminal No. 2 • Sensor (signal): electronic drive unit connector terminal No. 3 - throttle actuator connector terminal No. 3 • Sensor (ground): electronic drive unit connector terminal No. 4 - throttle actuator connector terminal No. 4
	Inspection condition		Disconnect each device from harness and measure from connection side of harness connector.
	Requirements		There is continuity.
	Inspection result (Is the judging standard satisfied?)	YES	After replacement of throttle actuator, go to step 16.
		NO	Modify harness.

Step 16	Inspection items		Inspection by control data
	Maintenance item		Perform actuator test item No. A7 “Intake throttle 1”.
	Inspection condition		• Vehicle: stationary (vehicle speed 0 km/h {0 MPH}) • Starter switch: ON (engine started) • Transmission: neutral
	Requirements		Actual position matches with target value set by Multi-Use Tester (check with service data “20: Intake Throttle actual position”).
	Inspection result (Is the judging standard satisfied?)	YES	Go to transient fault (See Gr00.).
		NO	Replacement of electronic drive unit

[Fault code]
Diagnosis code: P2120/Flash code: 65
[Monitor]
Abnormality of accelerator pedal switch
[Fault (outline)]
Plausibility
[Diagnosis check]
- Pedal pressing angle output from accelerator pedal position sensor is monitored for abnormality in ON/OFF status of accelerator pedal switch.

[Code generation condition]
- Recognition by accelerator pedal switch remains “pedal released” when accelerator pedal pressing angle output becomes 20%.
  (Warning lamp is lit and diagnosis code is displayed on first establishment of code generation condition.)

[Diagnosis check timing]
- When code generation condition is established after starter switch ON

[Diagnostic requirement]
- 2 seconds passed after starter switch ON
- 2 seconds passed after cranking
- Battery voltage: normal
- Accelerator switch is off (0%), or pedal depression angle registered by accelerator position sensors 1 and 2 is larger than 20%.

[Control effected by electronic control unit during fault]
- Effects no special control. (Accelerator pedal position sensor is used as usual.)

[Probable cause of trouble]
- Open-circuit or short-circuit of harness between electronic control unit and accelerator pedal switch
- Abnormality of each connector
- Abnormality of accelerator pedal switch
- Abnormality in electronic control unit

[Recoverability]
<Control during fault>
- Recovered if signal becomes normal when accelerator pedal is pressed.

<Fault code>
- Automatically cleared at 40th warm up cycle as counted from error occurrence time.
  (To clear as desired, erase from the memory.)

Warm up cycle : “Starter switch ON to start engine till starter switch OFF after coolant temperature increased and engine warmed up” constitutes 1 warm up cycle.

[Electronic Control Unit Connection Diagram]

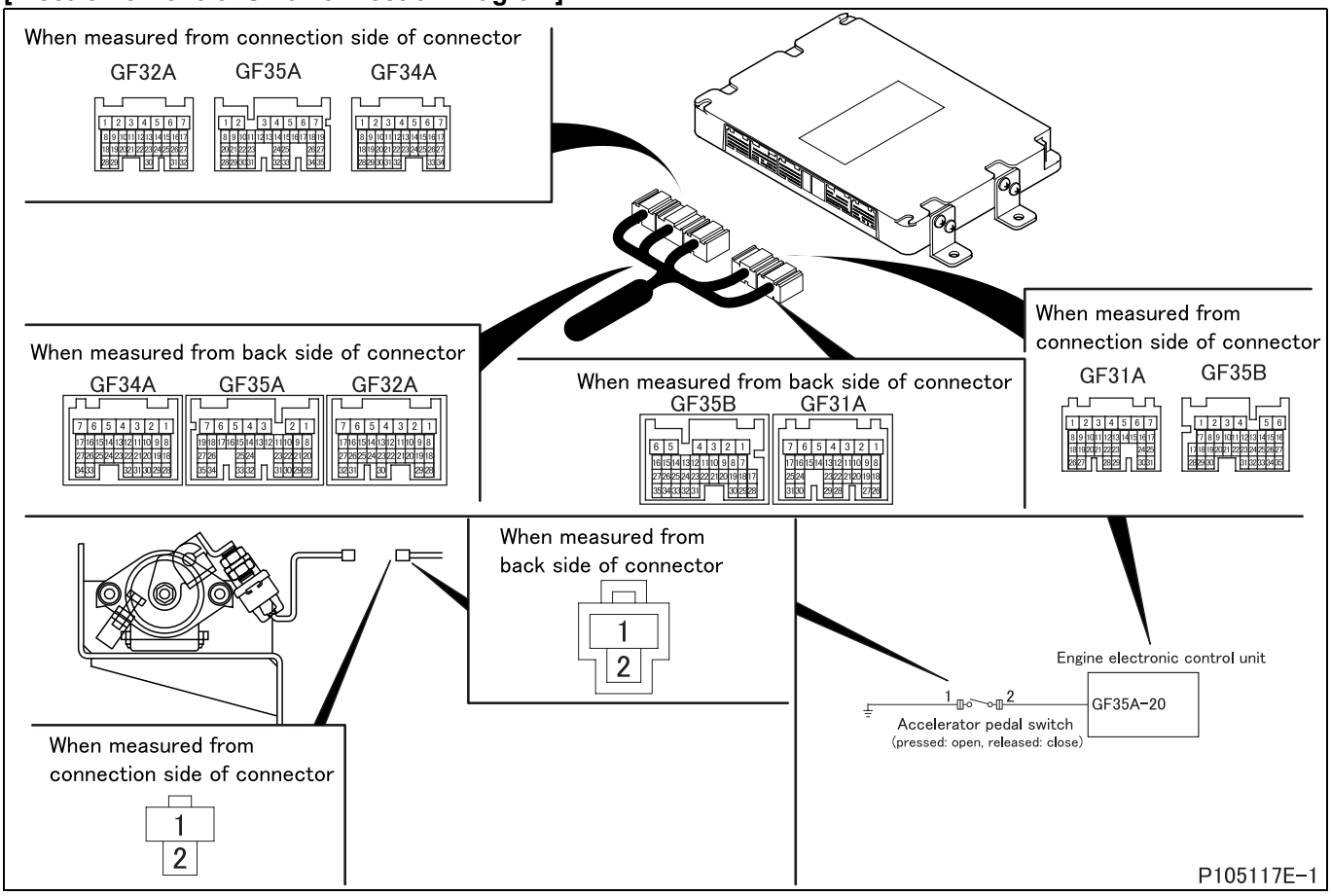

[Parts Identification and Location]

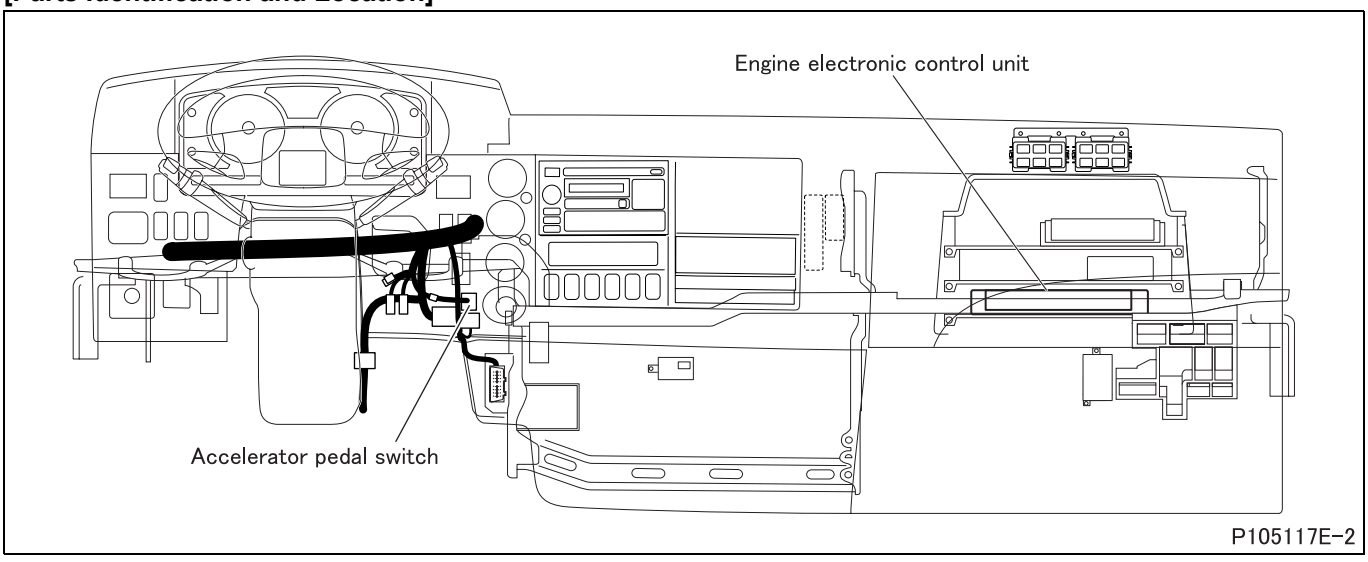

[Fault diagnosis]

- Perform checks in the sequence of the following steps.

Step 1	Inspection items		Inspection by control data
	Maintenance item		Measure item No. 73 “Accel SW” of Service Data.
	Inspection condition		–
	Requirements		• Accelerator pedal pressed: ON • Accelerator pedal released: OFF
	Inspection result (Is the judging standard satisfied?)	YES	Go to transient fault (See Gr00.).
		NO	Go to step 2.

Step 2	Inspection items		Inspection of electronic control unit connector
	Maintenance item		Inspection of connector
	Inspection condition		–
	Requirements		• Connector is properly connected. • No trace of water entry is found. • No corrosion is found in terminal. • Connection to terminal is appropriate.
	Inspection result (Is the judging standard satisfied?)	YES	Go to step 3.
		NO	Modify connector.

Step 3	Inspection items		Inspection of accelerator pedal switch connector
	Maintenance item		Inspection of connector
	Inspection condition		–
	Requirements		• Connector is properly connected. • No trace of water entry is found. • No corrosion is found in terminal. • Connection to terminal is appropriate.
	Inspection result (Is the judging standard satisfied?)	YES	Go to step 4.
		NO	Modify connector.

Step 4	Inspection items		Inspection of accelerator pedal switch unit
	Maintenance item		Check continuity between connector terminal No. 1 and 2.
	Inspection condition		Disconnect connector and measure switch side.
	Requirements		• Accelerator pedal released: There is continuity. • Accelerator pedal pressed: There is no continuity.
	Inspection result (Is the judging standard satisfied?)	YES	Go to step 5.
		NO	Replacement of accelerator pedal switch.

Step 5	Inspection items		Inspection of harness between pedal switch and electronic control unit (power supply)
	Maintenance item		Check circuit between accelerator pedal switch connector terminal No. 2 and electronic control unit connector (GF35A) terminal No. 20.
	Inspection condition		Disconnect each device from harness and measure from connection side of harness connector.
	Requirements		There is continuity.
	Inspection result (Is the judging standard satisfied?)	YES	Go to step 6.
		NO	Modify harness.

Step 6	Inspection items		Inspection of harness between switch and electronic control unit (ground)
	Maintenance item		Check circuit between accelerator pedal switch connector terminal No. 1 and cab ground.
	Inspection condition		Disconnect each device from harness and measure from connection side of harness connector.
	Requirements		There is continuity.
	Inspection result (Is the judging standard satisfied?)	YES	Go to step 7.
		NO	Modify harness.

Step 7	Inspection items		Inspection by control data
	Maintenance item		Measure item No. 73 “Accel SW” of Service Data.
	Inspection condition		–
	Requirements		• Accelerator pedal pressed: ON • Accelerator pedal released: OFF
	Inspection result (Is the judging standard satisfied?)	YES	Go to transient fault (See Gr00.).
		NO	Replacement of electronic control unit

[Fault code]
Diagnosis code: P2135/Flash code: 58
[Monitor]
Relative check of accelerator pedal position sensors (1 and 2)
[Fault (outline)]
There is too large difference between sensor 1 and 2.
[Diagnosis check]
- Difference in opening output between accelerator pedal position sensors 1 and 2 is compared for deviation from specified value.

[Code generation condition]
- Value of opening output remains 70% or more apart between two sensors for approx. 1 second.
  (Warning lamp is lit and diagnosis code is displayed on first establishment of code generation condition.)

[Diagnosis check timing]
- When code generation condition is established after starter switch ON

[Diagnostic requirement]
- 2 seconds passed after starter switch ON
- 2 seconds passed after cranking
- Battery voltage: normal

[Control effected by electronic control unit during fault]
- Controller area network communication
- When sensors 1 and 2 malfunction, control is effected with accelerator pedal opening selected as minimum.

[Probable cause of trouble]
- Open-circuit or short-circuit of harness between electronic control unit and accelerator pedal position sensors (1 and 2)
- Abnormality of each connector
- Abnormality of accelerator pedal position sensors (1 and 2)
- Abnormality in electronic control unit

[Recoverability]
<Control during fault>
- Recovered if signal becomes normal with starter switch in ON position.

<Warning lamp>
- Extinguished at 4th driving cycle after normal signal is input.

<Fault code>
- Automatically cleared at 40th warm up cycle after warning lamp is extinguished.
  (To clear as desired, erase from the memory.)

Driving cycle : “Starter switch ON to start engine till starter switch OFF” constitutes 1 driving cycle.
Warm up cycle : “Starter switch ON to start engine till starter switch OFF after coolant temperature increased and engine warmed up” constitutes 1 warm up cycle.

[Electronic Control Unit Connection Diagram]

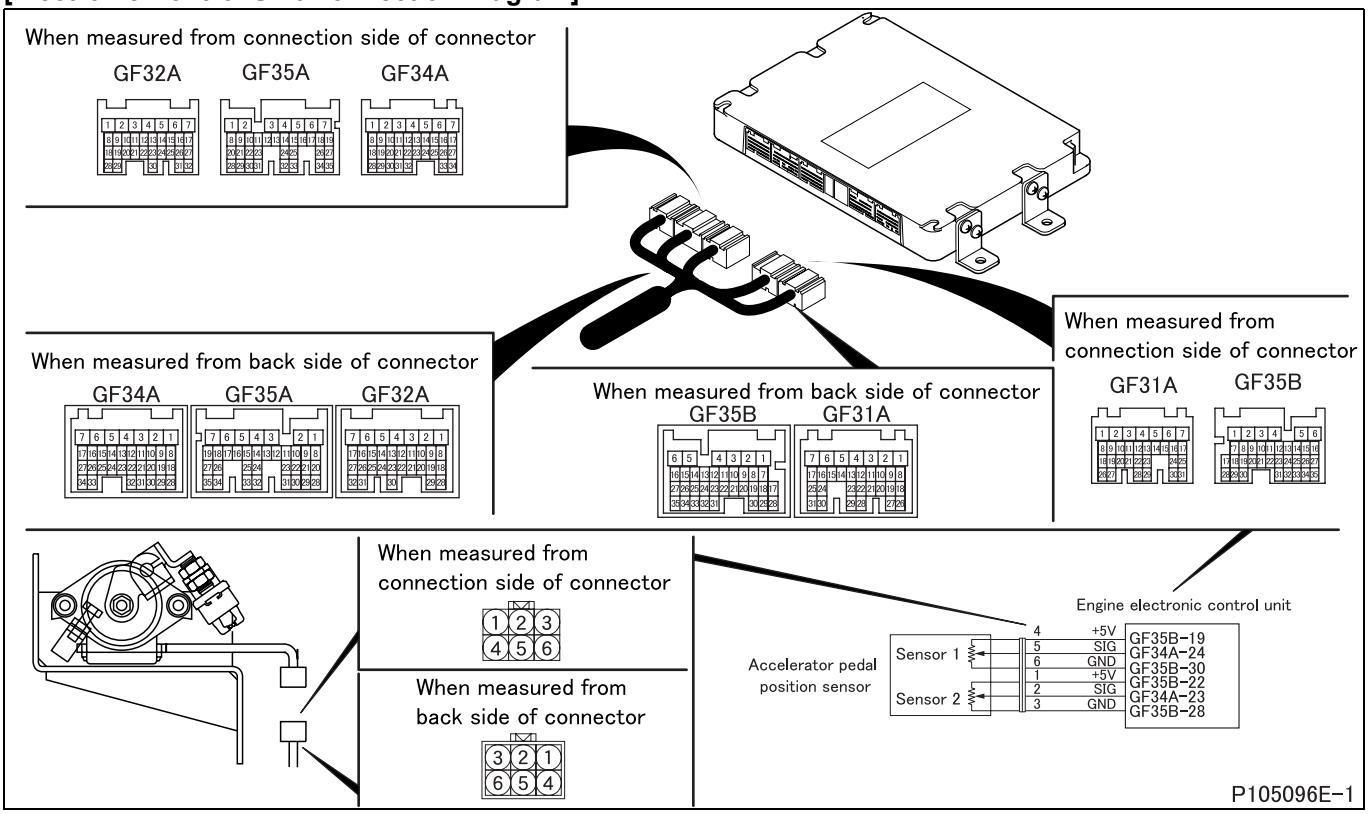

[Parts Identification and Location]

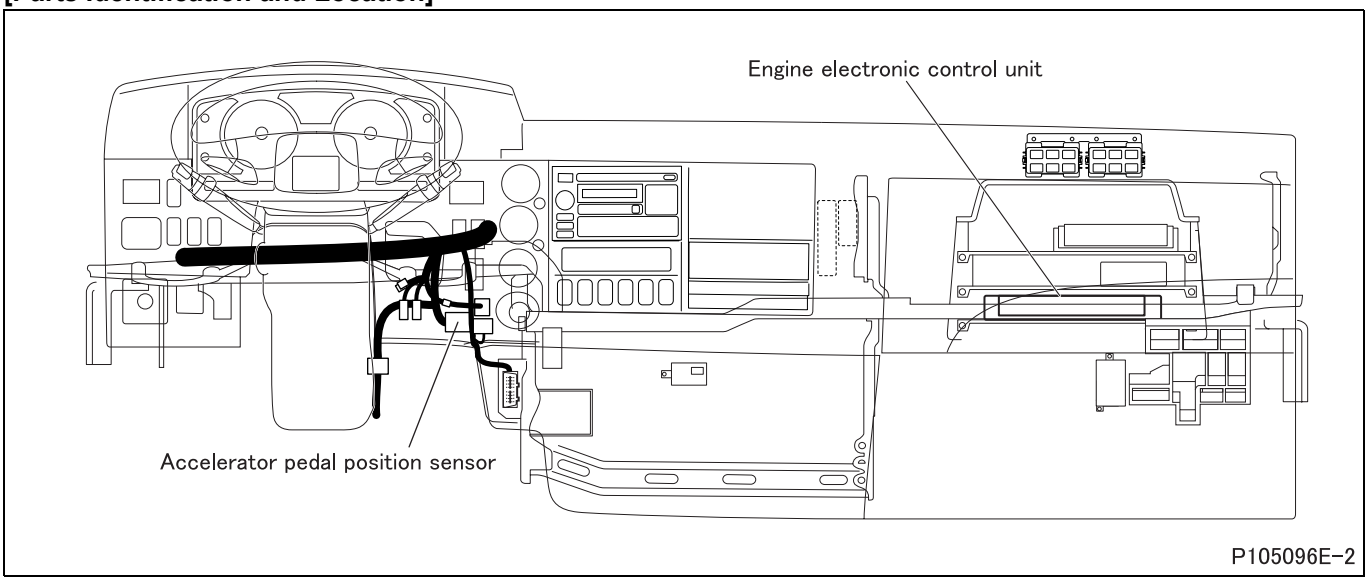

[Fault diagnosis]

- Perform checks in the sequence of the following steps.

Step 1	Inspection items		Inspection by control data
	Maintenance item		**<General Scanning Tool used>** Measurement of following service data • Sensor 1: Item “Accelerator Pedal Position 1” • Sensor 2: Item “Accelerator Pedal Position 2” **<Multi-Use Tester used>** Measurement of following service data • Sensor 1: Item No. 24 “Accel Pedal Sensor Voltage 1”. • Sensor 2: Item No. 25 “Accel Pedal Sensor Voltage 2”.
	Inspection condition		–
	Requirements		**<General Scanning Tool used>** • Accelerator pedal released: 0% • Accelerator pedal pressed: 100% **<Multi-Use Tester used>** • Accelerator pedal released: 0.85 ± 0.1 V • Accelerator pedal pressed: 4.15 ± 0.1 V
	Inspection result (Is the judging standard satisfied?)	YES	Go to transient fault (See Gr00.).
		NO	Go to step 2.

Step 2	Inspection items		Inspection by electronic control unit connector (signal)
	Maintenance item		Measure values of voltage between following connector terminals • Sensor 1: (GF34A) terminal No. 24 (+) and (GF35B) terminal No. 30 (–). • Sensor 2: (GF34A) terminal No. 23 (+) and (GF35B) terminal No. 28 (–).
	Inspection condition		• Measure from back side of harness connector with each device connected to harness. • Starter switch: ON
	Requirements		• Accelerator pedal released: 0.85 ± 0.1 V • Accelerator pedal pressed: 4.15 ± 0.1 V
	Inspection result (Is the judging standard satisfied?)	YES	Go to step 5.
		NO	Go to step 3.

Step 3	Inspection items		Inspection by electronic control unit connector (power supply)
	Maintenance item		Measure values of voltage between following connector (GF35B) terminals • Sensor 1: 19 (+) - 30 (–) • Sensor 2: 22 (+) - 28 (–)
	Inspection condition		• Measure from back side of harness connector with each device connected to harness. • Starter switch: ON
	Requirements		5 V
	Inspection result (Is the judging standard satisfied?)	YES	Go to step 4.
		NO	Go to step 5.

Step 4	Inspection items		Inspection by electronic control unit connector (ground)
	Maintenance item		Measure values of voltage between following connector terminals • Sensor 1: (GF35B) terminal No. 30 (+) and (GF31A) terminal No. 3 (–). • Sensor 2: (GF35B) terminal No. 28 (+) and (GF31A) terminal No. 3 (–).
	Inspection condition		• Measure from back side of harness connector with each device connected to harness. • Starter switch: ON
	Requirements		0 V
	Inspection result (Is the judging standard satisfied?)	YES	Go to step 6.
		NO	Go to step 5.

Step 5	Inspection items		Inspection of electronic control unit connector
	Maintenance item		Inspection of connector
	Inspection condition		–
	Requirements		• Connector is properly connected. • No trace of water entry is found. • No corrosion is found in terminal. • Connection to terminal is appropriate.
	Inspection result (Is the judging standard satisfied?)	YES	Go to step 12.
		NO	Modify connector.

Step 6	Inspection items		Inspection of sensor connector
	Maintenance item		Inspection of connector
	Inspection condition		–
	Requirements		• Connector is properly connected. • No trace of water entry is found. • No corrosion is found in terminal. • Connection to terminal is appropriate.
	Inspection result (Is the judging standard satisfied?)	YES	Go to step 7.
		NO	Modify connector.

Step 7	Inspection items		Inspection of accelerator pedal position sensor unit.
	Maintenance item		Measure values of voltage between the following connector terminals. • Sensor 1: 5 (+) - 6 (–) • Sensor 2: 6 (+) - 3 (–)
	Inspection condition		Apply voltage DC 5 V across connector terminals. • Sensor 1: 4 (+) - 6 (–) • Sensor 2: 1 (+) - 3 (–)
	Requirements		• Idling position A: 0.85 ± 0.1 V • Accelerator switch operating position B: 1.0 ± 0.2 V • Full-load position C: 4.15 ± 0.1 V A: When accelerator lever fully presses accelerator switch. B: When accelerator pedal is pressed until there is no continuity between terminals 1 and 2. C: When accelerator lever is in contact with full-load stopper bolt.
	Inspection result (Is the judging standard satisfied?)	YES	Go to step 8.
		NO	Adjustment of sensor (If the measurement deviates from the standard value after adjustment, replace the sensor.) (See “INSPECTION OF ELECTRICAL EQUIPMENT” - “Inspection of accelerator pedal position sensor”.)

<Step 7 inspection diagram>

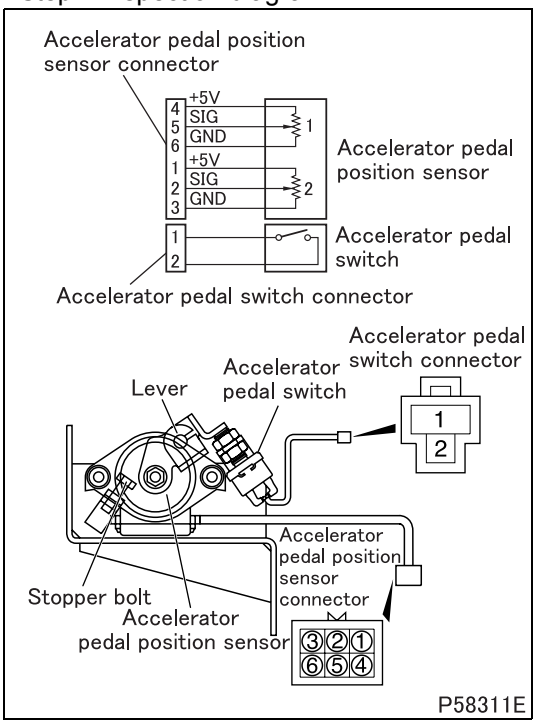

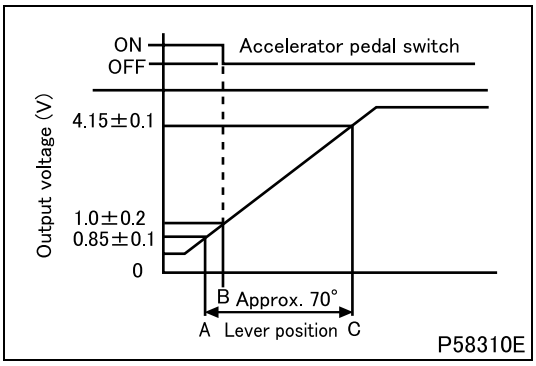

Step 8	Inspection items		Inspection of harness between electronic control unit and sensor (power supply)
	Maintenance item		Measure values of voltage between the following connector terminals • Sensor 1: 4 (+) - 6 (–) • Sensor 2: 1 (+) - 3 (–)
	Inspection condition		• Measure from back side of harness connector with each device connected to harness. • Starter switch: ON
	Requirements		5 V
	Inspection result (Is the judging standard satisfied?)	YES	Go to step 10.
		NO	Go to step 9.

Step 9	Inspection items		Inspection of harness between electronic control unit and sensor (power supply)
	Maintenance item		Check circuit between following connector terminals. • Sensor 1: sensor connector terminal No. 4 - electronic control unit connector (GF35B) terminal No. 19 • Sensor 2: sensor connector terminal No. 1 - electronic control unit connector (GF35B) terminal No. 22
	Inspection condition		Disconnect each device from harness and measure from connection side of harness connector.
	Requirements		There is continuity.
	Inspection result (Is the judging standard satisfied?)	YES	Go to step 12.
		NO	Modify harness.

Step 10	Inspection items		Inspection of harness between electronic control unit and sensor (ground)
	Maintenance item		Check circuit between following connector terminals. • Sensor 1: sensor connector terminal No. 6 - electronic control unit connector (GF35B) terminal No. 30 • Sensor 2: sensor connector terminal No. 3 - electronic control unit connector (GF35B) terminal No. 28
	Inspection condition		Disconnect each device from harness and measure from connection side of harness connector.
	Requirements		There is continuity.
	Inspection result (Is the judging standard satisfied?)	YES	Go to step 11.
		NO	Modify harness.

Step 11	Inspection items		Inspection of harness between electronic control unit and sensor (signal)
	Maintenance item		Check circuit between following connector terminals. • Sensor 1: sensor connector terminal No. 5 - electronic control unit connector (GF34A) terminal No. 24 • Sensor 2: sensor connector terminal No. 2 - electronic control unit connector (GF34A) terminal No. 23
	Inspection condition		Disconnect each device from harness and measure from connection side of harness connector.
	Requirements		There is continuity.
	Inspection result (Is the judging standard satisfied?)	YES	Go to step 12.
		NO	Modify harness.

Step 12	Inspection items		Inspection by control data
	Maintenance item		**<General Scanning Tool used>** Measurement of following service data • Sensor 1: Item “Accel Pedal Position 1” • Sensor 2: Item “Accel Pedal Position 2” **<Multi-Use Tester used>** Measurement of following service data • Sensor 1: Item No. 24 “Accel Pedal Sensor Voltage 1”. • Sensor 2: Item No. 25 “Accel Pedal Sensor Voltage 2”.
	Inspection condition		–
	Requirements		**<General Scanning Tool used>** • Accelerator pedal released: 0% • Accelerator pedal pressed: 100% **<Multi-Use Tester used>** • Accelerator pedal released: 0.815 ± 0.06 V • Accelerator pedal pressed: 4.15 ± 0.1 V
	Inspection result (Is the judging standard satisfied?)	YES	Go to transient fault (See Gr00.).
		NO	Replacement of electronic control unit

[Fault code]
Diagnosis code: P2146/Flash code: 82
[Monitor]
Abnormality of injector magnetic valve power supply circuit (No. 1, 3 and 5 cylinders)
[Fault (outline)]
Open circuit (No. 1, 3 and 5 cylinders)
[Diagnosis check]
- Injector magnetic valve (No. 1, 3 and 5 cylinders) circuit is monitored for fault.

[Code generation condition]
- Open circuit of injector magnetic valve (No. 1, 3 or 5 cylinders) is detected.
  (Warning lamp is lit and diagnosis code is displayed on first establishment of code generation condition.)

[Diagnosis check timing]
- When code generation condition is established after starter switch ON

[Diagnostic requirement]
- 2 seconds passed after starter switch ON
- 2 seconds passed after cranking
- Battery voltage: normal
- Injection time command: available
- Engine speed sensor: normal
- Sub-CPU: in order
- Injector charge circuit: ON
- Post injection: none

[Control effected by electronic control unit during fault]
- Injection quantity is limited.
- Exhaust gas recirculation control is stopped.
- Throttle control is stopped.
- Diesel particulate filter regeneration (manual or automatic) is stopped.
- Auto cruise control is stopped.
- Learning of FCCB (fuel control cylinder balance) is inhibited.
- 3-cylinder operation (No. 2, 4 and 6 cylinders)

[Probable cause of trouble]
- Open-circuit or short-circuit of harness between electronic control unit and injector magnetic valve (No. 1, 3 and 5 cylinders)
- Abnormality of each connector
- Abnormality of injector magnetic valve (No. 1, 3 and 5 cylinders)
- Abnormality in electronic control unit

[Recoverability]
<Control during fault>
- Recovered if signal becomes normal with starter switch in ON position.

<Warning lamp>
- Extinguished at 4th driving cycle after normal signal is input.

<Fault code>
- Automatically cleared at 40th warm up cycle after warning lamp is extinguished.
  (To clear as desired, erase from the memory.)

Driving cycle : “Starter switch ON to start engine till starter switch OFF” constitutes 1 driving cycle.
Warm up cycle : “Starter switch ON to start engine till starter switch OFF after coolant temperature increased and engine warmed up” constitutes 1 warm up cycle.

[Electronic Control Unit Connection Diagram]

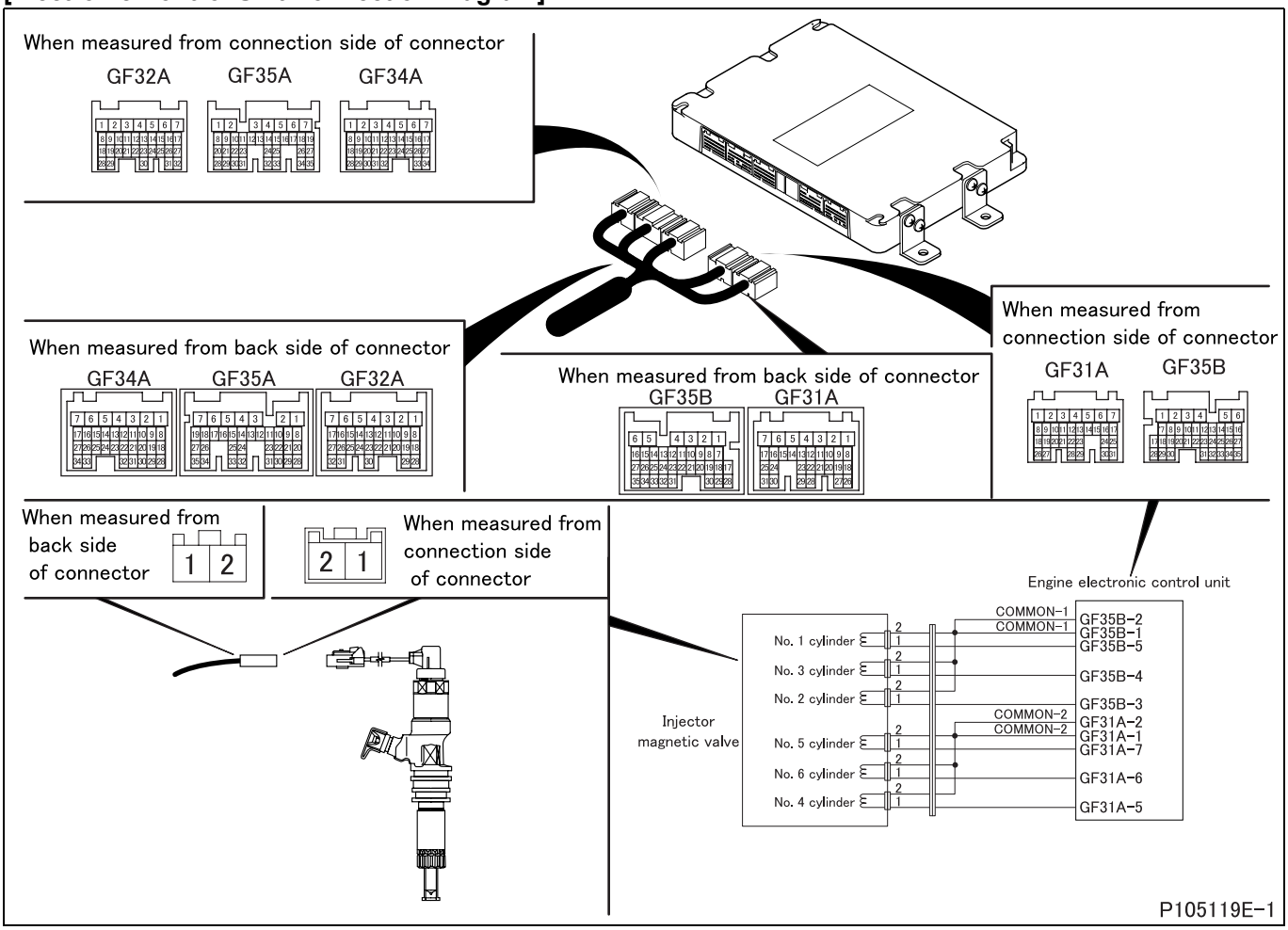

[Parts Identification and Location]

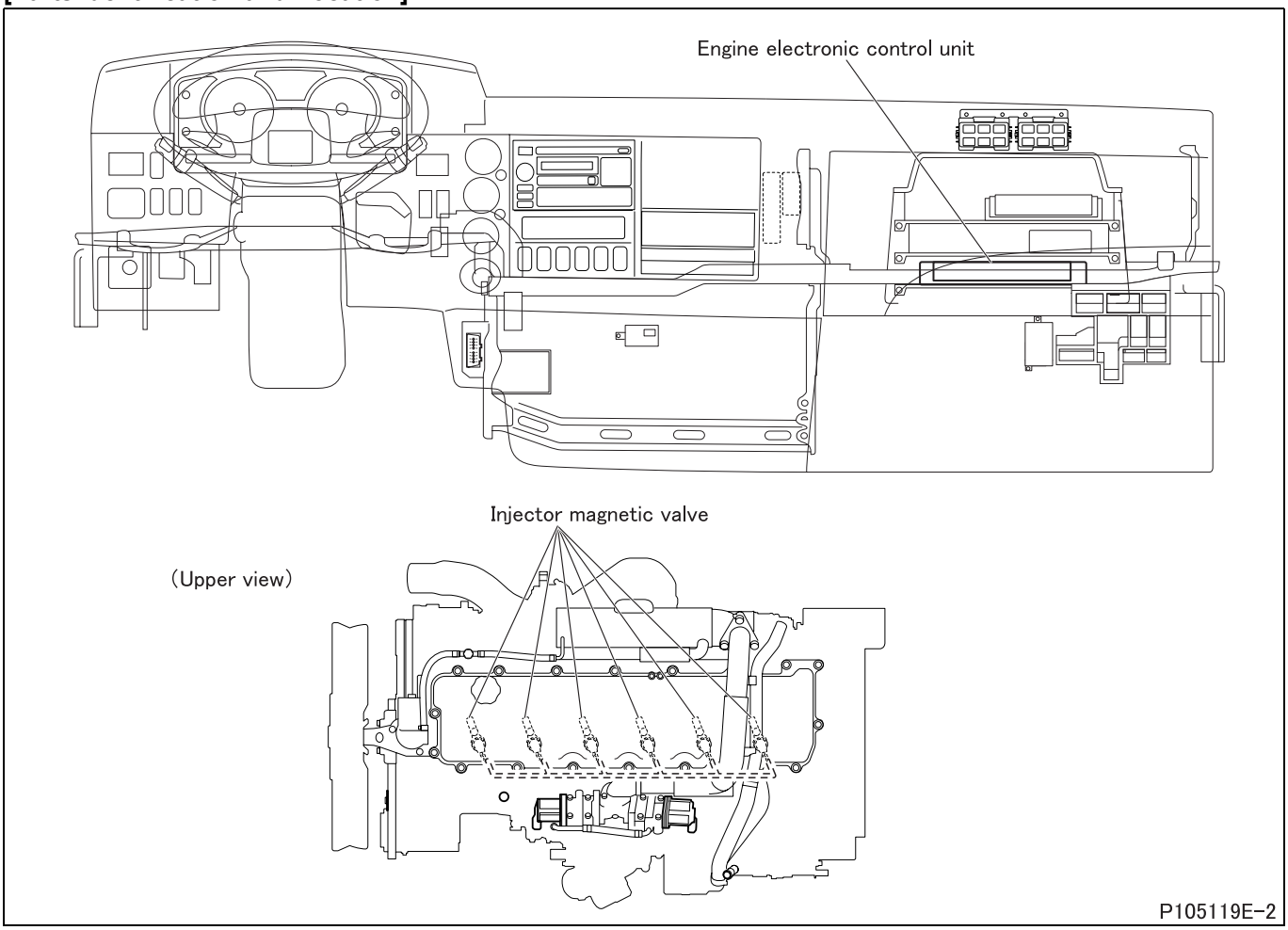

[Fault diagnosis]

- Perform checks in the sequence of the following steps.

Step 1	Inspection items		Inspection by control data
	Maintenance item		Perform following actuator test. • Injector magnetic valve (No. 1 cylinder): perform item No. BB “Injector Test 1.” • Injector magnetic valve (No. 3 cylinder): perform item No. BD “Injector Test 3.” • Injector magnetic valve (No. 5 cylinder): perform item No. BC “Injector Test 2.”
	Inspection condition		• Vehicle: stationary (vehicle speed 0 km/h {0 MPH}) • Engine start: At idle • Transmission: neutral • The current diagnosis code does not occur.
	Requirements		Injector is stopped during actuator test with engine changed in operating condition (vibrating).
	Inspection result (Is the judging standard satisfied?)	YES	Go to transient fault (See Gr00.).
		NO	Go to step 2.

Step 2	Inspection items		Inspection by electronic control unit connector
	Maintenance item		Measure values of voltage between following connector terminals • Injector magnetic valve (No. 1 cylinder): (GF35B) terminal No. 1 or 2 (+) and (GF35B) terminal No. 5 (–). • Injector magnetic valve (No. 3 cylinder): (GF35B) terminal No. 1 or 2 (+) and (GF35B) terminal No. 4 (–). • Injector magnetic valve (No. 5 cylinder): (GF31A) terminal No. 1 or 2 (+) and (GF31A) terminal No. 7 (–).
	Inspection condition		Disconnect electronic control unit from harness and measure from connection side of harness connector.
	Requirements		0.45 ± 0.1 Ω (20°C {68°F})
	Inspection result (Is the judging standard satisfied?)	YES	Go to step 3.
		NO	Go to step 4.

Step 3	Inspection items		Inspection of electronic control unit connector
	Maintenance item		Inspection of connector
	Inspection condition		–
	Requirements		• Connector is properly connected. • No trace of water entry is found. • No corrosion is found in terminal. • Connection to terminal is appropriate.
	Inspection result (Is the judging standard satisfied?)	YES	Go to step 8.
		NO	Modify connector.

Step 4	Inspection items		Inspection of injector magnetic valve connector
	Maintenance item		Inspection of connector
	Inspection condition		–
	Requirements		• Connector is properly connected. • Connection to terminal is appropriate.
	Inspection result (Is the judging standard satisfied?)	YES	Go to step 5.
		NO	Modify connector.

Step 5	Inspection items		Inspection of injector magnetic valve unit
	Maintenance item		Measure value of resistance between connector terminal No. 1 and 2.
	Inspection condition		–
	Requirements		0.45 ± 0.1 Ω (20°C {68°F})
	Inspection result (Is the judging standard satisfied?)	YES	Go to step 6.
		NO	Replacement of injector

<Step 5 inspection diagram>

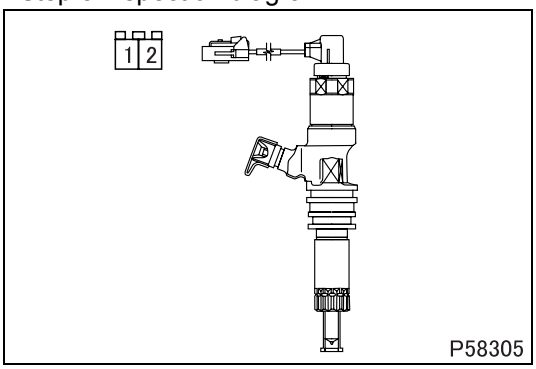

Step 6	Inspection items		Inspection of harness between injector magnetic valve and electronic control unit (power supply)
	Maintenance item		Check circuit between following connector terminals. • Injector magnetic valve (No. 1 cylinder): injector magnetic valve connector terminal No. 2 - electronic control unit connector (GF35B) terminal No. 1 or 2 • Injector magnetic valve (No. 3 cylinder): injector magnetic valve connector terminal No. 2 - electronic control unit connector (GF35B) terminal No. 1 or 2 • Injector magnetic valve (No. 5 cylinder): injector magnetic valve connector terminal No. 2 - electronic control unit connector (GF31A) terminal No. 1 or 2.
	Inspection condition		Disconnect each device from harness and measure from connection side of harness connector.
	Requirements		There is continuity.
	Inspection result (Is the judging standard satisfied?)	YES	Go to step 7.
		NO	Modify harness.

Step 7	Inspection items		Inspection of harness between injector magnetic valve and electronic control unit (ground)
	Maintenance item		Check circuit between following connector terminals. • Injector magnetic valve (No. 1 cylinder): injector magnetic valve connector terminal No. 1 - electronic control unit connector (GF35B) terminal No. 5 • Injector magnetic valve (No. 3 cylinder): injector magnetic valve connector terminal No. 1 - electronic control unit connector (GF35B) terminal No. 4 • Injector magnetic valve (No. 5 cylinder): injector magnetic valve connector terminal No. 1 - electronic control unit connector (GF31A) terminal No. 7
	Inspection condition		Disconnect each device from harness and measure from connection side of harness connector.
	Requirements		There is continuity.
	Inspection result (Is the judging standard satisfied?)	YES	Go to step 8.
		NO	Modify harness.

Step 8	Inspection items		Inspection by control data
	Maintenance item		Perform following actuator test. • Injector magnetic valve (No. 1 cylinder): Perform item No. BB “Injector Test 1.” • Injector magnetic valve (No. 3 cylinder): Perform item No. BD “Injector Test 3.” • Injector magnetic valve (No. 5 cylinder): Perform item No. BC “Injector Test 2.”
	Inspection condition		• Vehicle: stationary (vehicle speed 0 km/h {0 MPH}) • Engine start: At idle • Transmission: neutral • The current diagnosis code does not occur.
	Requirements		Injector is stopped during actuator test with engine changed in operating condition (vibrating).
	Inspection result (Is the judging standard satisfied?)	YES	Go to transient fault (See Gr00.).
		NO	Replacement of electronic control unit

[Fault code]
Diagnosis code: P2147/Flash code: 82
[Monitor]
Injector magnetic valve (No. 1, 3 and 5 cylinders)
[Fault (outline)]
- Injector short circuit ground
- Injector open circuit
  (No. 1, 3 and 5 cylinders)

[Diagnosis check]
- Injector magnetic valve (No. 1, 3 and 5 cylinders) circuit is monitored for fault.

[Code generation condition]
- Short-circuit to ground of injector magnetic valve (No. 1, 3 and 5 cylinders) is detected.
  (Warning lamp is lit and diagnosis code is displayed on first establishment of code generation condition.)

[Diagnosis check timing]
- When code generation condition is established after starter switch ON

[Diagnostic requirement]
- 2 seconds passed after starter switch ON
- 2 seconds passed after cranking
- Battery voltage: normal
- Post injection: none
- Engine speed sensor: normal

[Control effected by electronic control unit during fault]
- Injection quantity is limited.
- Main injection only is allowed.
- Common rail pressure is limited.
- Exhaust gas recirculation control is stopped.
- Throttle control is stopped.
- Diesel particulate filter regeneration (manual or automatic) is stopped.
- Auto cruise control is stopped.
- Learning of FCCB (fuel control cylinder balance) is inhibited.
- 3-cylinder operation (No. 1, 3 and 5 cylinders)

[Probable cause of trouble]
- Open-circuit or short-circuit of harness between electronic control unit and injector magnetic valve (No. 1, 3 and 5 cylinders)
- Abnormality of each connector
- Abnormality of injector magnetic valve (No. 1, 3 and 5 cylinders)
- Abnormality in electronic control unit

[Recoverability]
<Control during fault>
- Recovered if signal becomes normal when starter switch is turned OFF to ON (power supply resumed to electronic control unit).

<Warning lamp>
- Extinguished at 4th driving cycle after normal signal is input.

<Fault code>
- Automatically cleared at 40th warm up cycle after warning lamp is extinguished.
  (To clear as desired, erase from the memory.)

Driving cycle : “Starter switch ON to start engine till starter switch OFF” constitutes 1 driving cycle.
Warm up cycle : “Starter switch ON to start engine till starter switch OFF after coolant temperature increased and engine warmed up” constitutes 1 warm up cycle.

[Electronic Control Unit Connection Diagram]

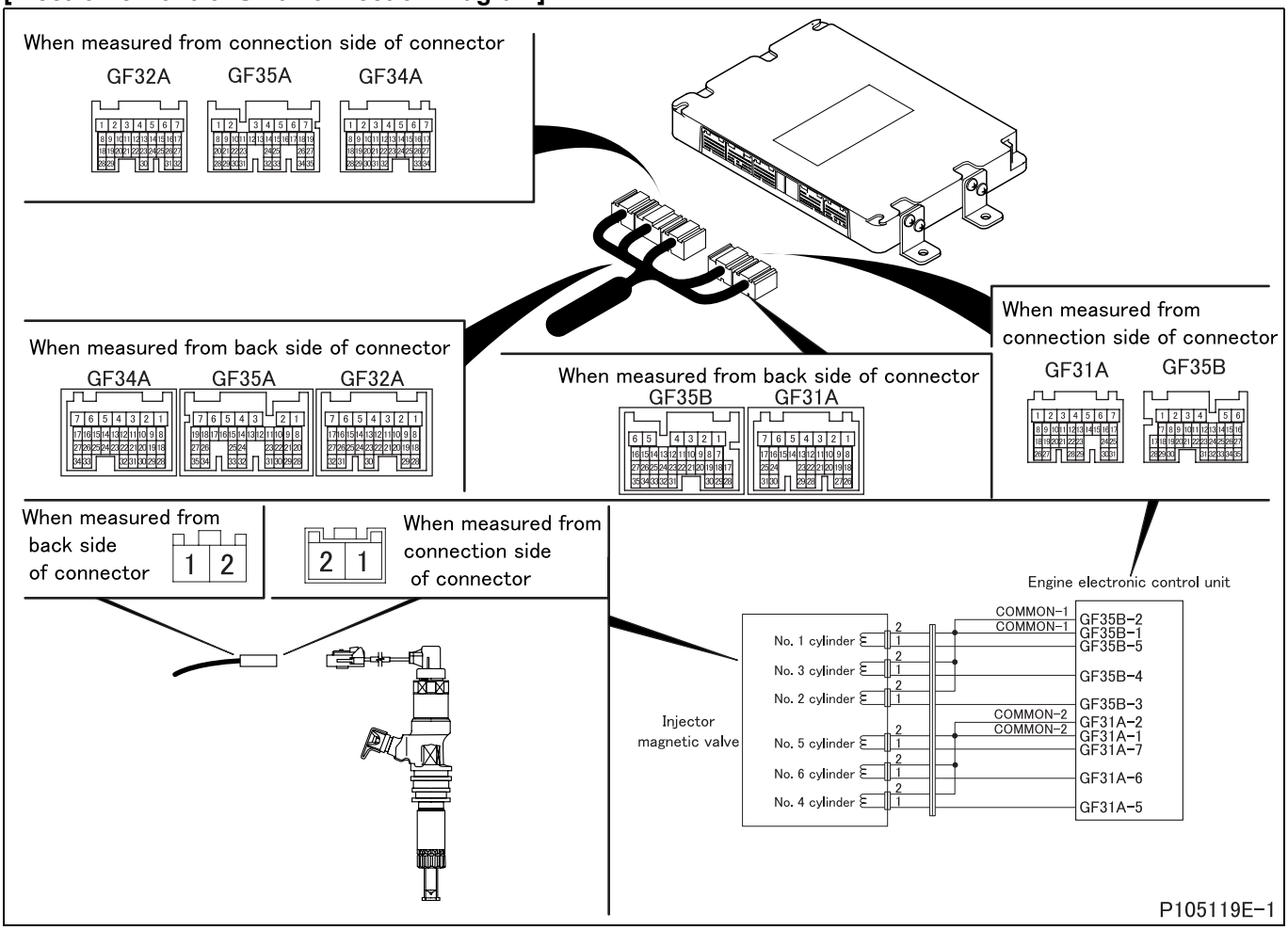

[Parts Identification and Location]

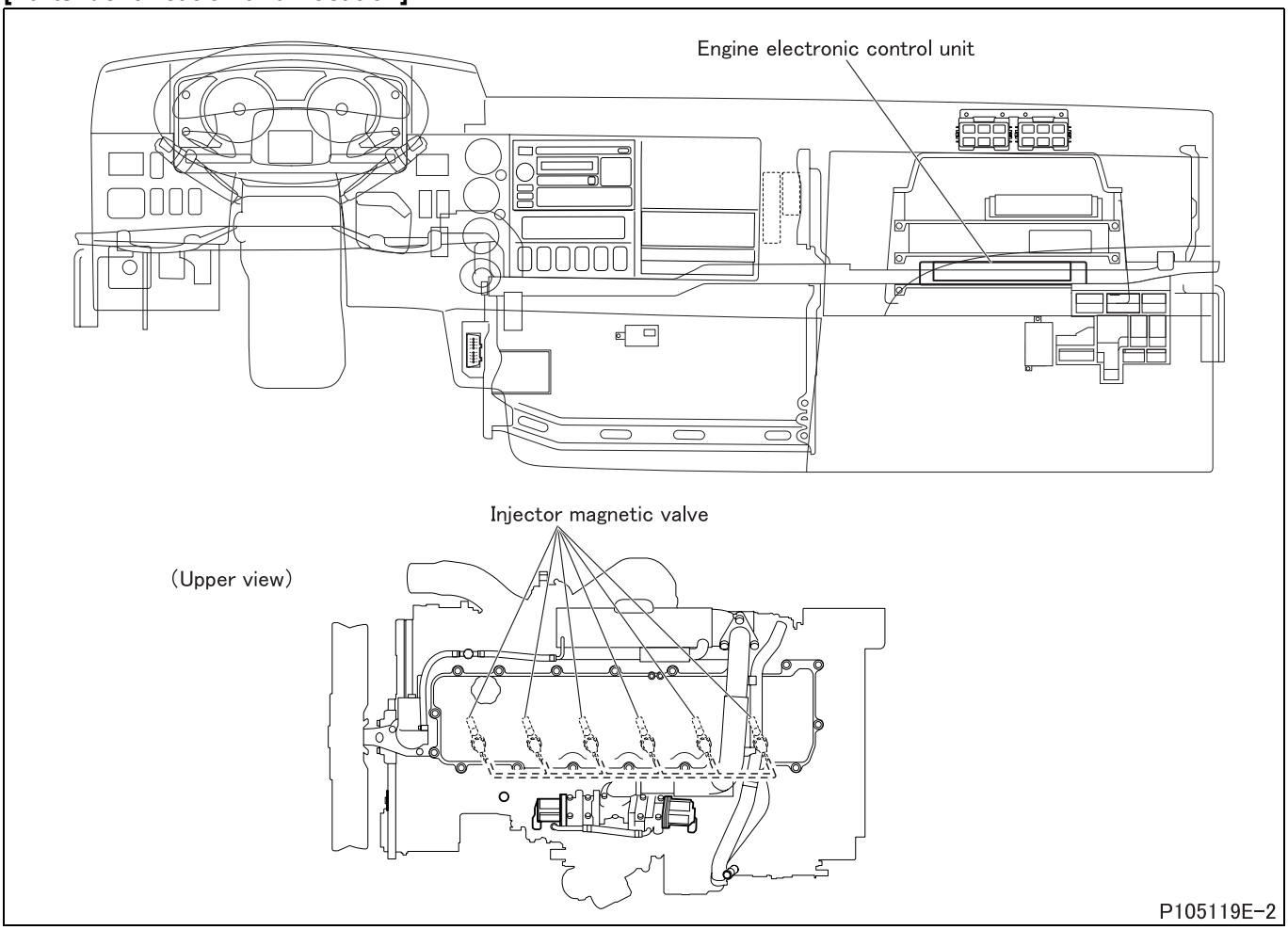

[Fault diagnosis]

- Perform checks in the sequence of the following steps.

Step 1	Inspection items		Inspection by control data
	Maintenance item		Perform following actuator test. • Injector magnetic valve (No. 1 cylinder): perform item No. BB “Injector Test 1.” • Injector magnetic valve (No. 3 cylinder): perform item No. BD “Injector Test 3.” • Injector magnetic valve (No. 5 cylinder): perform item No. BC “Injector Test 2.”
	Inspection condition		• Vehicle: stationary (vehicle speed 0 km/h {0 MPH}) • Engine start: At idle • Transmission: neutral • The current diagnosis code does not occur.
	Requirements		Injector is stopped during actuator test with engine changed in operating condition (vibrating).
	Inspection result (Is the judging standard satisfied?)	YES	Go to transient fault (See Gr00.).
		NO	Go to step 2.

Step 2	Inspection items		Inspection by electronic control unit connector
	Maintenance item		Measure values of voltage between following connector terminals • Injector magnetic valve (No. 1 cylinder): (GF35B) terminal No. 1 or 2 (+) and (GF35B) terminal No. 5 (–). • Injector magnetic valve (No. 3 cylinder): (GF35B) terminal No. 1 or 2 (+) and (GF35B) terminal No. 4 (–). • Injector magnetic valve (No. 5 cylinder): (GF31A) terminal No. 1 or 2 (+) and (GF31A) terminal No. 7 (–).
	Inspection condition		Disconnect electronic control unit from harness and measure from connection side of harness connector.
	Requirements		0.45 ± 0.1 Ω (20°C {68°F})
	Inspection result (Is the judging standard satisfied?)	YES	Go to step 3.
		NO	Go to step 4.

Step 3	Inspection items		Inspection of electronic control unit connector
	Maintenance item		Inspection of connector
	Inspection condition		–
	Requirements		• Connector is properly connected. • No trace of water entry is found. • No corrosion is found in terminal. • Connection to terminal is appropriate.
	Inspection result (Is the judging standard satisfied?)	YES	Go to step 8.
		NO	Modify connector.

Step 4	Inspection items		Inspection of injector magnetic valve connector
	Maintenance item		Inspection of connector
	Inspection condition		–
	Requirements		• Connector is properly connected. • Connection to terminal is appropriate.
	Inspection result (Is the judging standard satisfied?)	YES	Go to step 5.
		NO	Modify connector.

Step 5	Inspection items		Inspection of injector magnetic valve unit
	Maintenance item		Measure value of resistance between connector terminal No. 1 and 2.
	Inspection condition		–
	Requirements		0.45 ± 0.1 Ω (20°C {68°F})
	Inspection result (Is the judging standard satisfied?)	YES	Go to step 6.
		NO	Replacement of injector

<Step 5 inspection diagram>

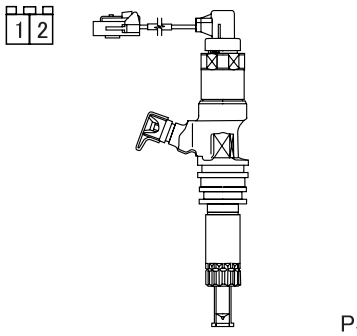

Step 6	Inspection items		Inspection of harness between injector magnetic valve and electronic control unit (power supply)
	Maintenance item		Check circuit between following connector terminals. • Injector magnetic valve (No. 1 cylinder): injector magnetic valve connector terminal No. 2 - electronic control unit connector (GF35B) terminal No. 1 or 2 • Injector magnetic valve (No. 3 cylinder): injector magnetic valve connector terminal No. 2 - electronic control unit connector (GF35B) terminal No. 1 or 2 • Injector magnetic valve (No. 5 cylinder): injector magnetic valve connector terminal No. 2 - electronic control unit connector (GF31A) terminal No. 1 or 2.
	Inspection condition		Disconnect each device from harness and measure from connection side of harness connector.
	Requirements		There is continuity.
	Inspection result (Is the judging standard satisfied?)	YES	Go to step 7.
		NO	Modify harness.

Step 7	Inspection items		Inspection of harness between injector magnetic valve and electronic control unit (ground)
	Maintenance item		Check circuit between following connector terminals. • Injector magnetic valve (No. 1 cylinder): injector magnetic valve connector terminal No. 1 - electronic control unit connector (GF35B) terminal No. 5 • Injector magnetic valve (No. 3 cylinder): injector magnetic valve connector terminal No. 1 - electronic control unit connector (GF35B) terminal No. 4 • Injector magnetic valve (No. 5 cylinder): injector magnetic valve connector terminal No. 1 - electronic control unit connector (GF31A) terminal No. 7
	Inspection condition		Disconnect each device from harness and measure from connection side of harness connector.
	Requirements		There is continuity.
	Inspection result (Is the judging standard satisfied?)	YES	Go to step 8.
		NO	Modify harness.

Step 8	Inspection items		Inspection by control data
	Maintenance item		Perform following actuator test. • Injector magnetic valve (No. 1 cylinder): Perform item No. BB “Injector Test 1.” • Injector magnetic valve (No. 3 cylinder): Perform item No. BD “Injector Test 3.” • Injector magnetic valve (No. 5 cylinder): Perform item No. BC “Injector Test 2.”
	Inspection condition		• Vehicle: stationary (vehicle speed 0 km/h {0 MPH}) • Engine start: At idle • Transmission: neutral • The current diagnosis code does not occur.
	Requirements		Injector is stopped during actuator test with engine changed in operating condition (vibrating).
	Inspection result (Is the judging standard satisfied?)	YES	Go to transient fault (See Gr00.).
		NO	Replacement of electronic control unit

[Fault code]
Diagnosis code: P2148/Flash code: 82
[Monitor]
Injector magnetic valve (No. 1, 3 and 5 cylinders)
[Fault (outline)]
Injector short circuit battery (No. 1, 3 and 5 cylinders)
[Diagnosis check]
- Injector magnetic valve (No. 1, 3 and 5 cylinders) circuit is monitored for fault.

[Code generation condition]
- Short circuit to battery of injector magnetic valve (No. 1, 3 and 5 cylinders) is detected.
  (Warning lamp is lit and diagnosis code is displayed on first establishment of code generation condition.)

[Diagnosis check timing]
- When code generation condition is established after starter switch ON

[Diagnostic requirement]
- 2 seconds passed after starter switch ON
- 2 seconds passed after cranking
- Battery voltage: normal
- Post injection: none
- Engine speed sensor: normal

[Control effected by electronic control unit during fault]
- Injection quantity is limited.
- Main injection only is allowed.
- Common rail pressure is limited.
- Exhaust gas recirculation control is stopped.
- Throttle control is stopped.
- Diesel particulate filter regeneration (manual or automatic) is stopped.
- Auto cruise control is stopped.
- Fault detection for controller area network communication is stopped.
- Learning of FCCB (fuel control cylinder balance) is inhibited.
- 3-cylinder operation (No. 1, 3 and 5 cylinders)

[Probable cause of trouble]
- Open-circuit or short-circuit of harness between electronic control unit and injector magnetic valve (No. 1, 3 and 5 cylinders)
- Abnormality of each connector
- Abnormality of injector magnetic valve (No. 1, 3 and 5 cylinders)
- Abnormality in electronic control unit

[Recoverability]
<Control during fault>
- Recovered if signal becomes normal when starter switch is turned OFF to ON (power supply resumed to electronic control unit).

<Warning lamp>
- Extinguished at 4th driving cycle after normal signal is input.

<Fault code>
- Automatically cleared at 40th warm up cycle after warning lamp is extinguished.
  (To clear as desired, erase from the memory.)

Driving cycle : “Starter switch ON to start engine till starter switch OFF” constitutes 1 driving cycle.
Warm up cycle : “Starter switch ON to start engine till starter switch OFF after coolant temperature increased and engine warmed up” constitutes 1 warm up cycle.

[Electronic Control Unit Connection Diagram]

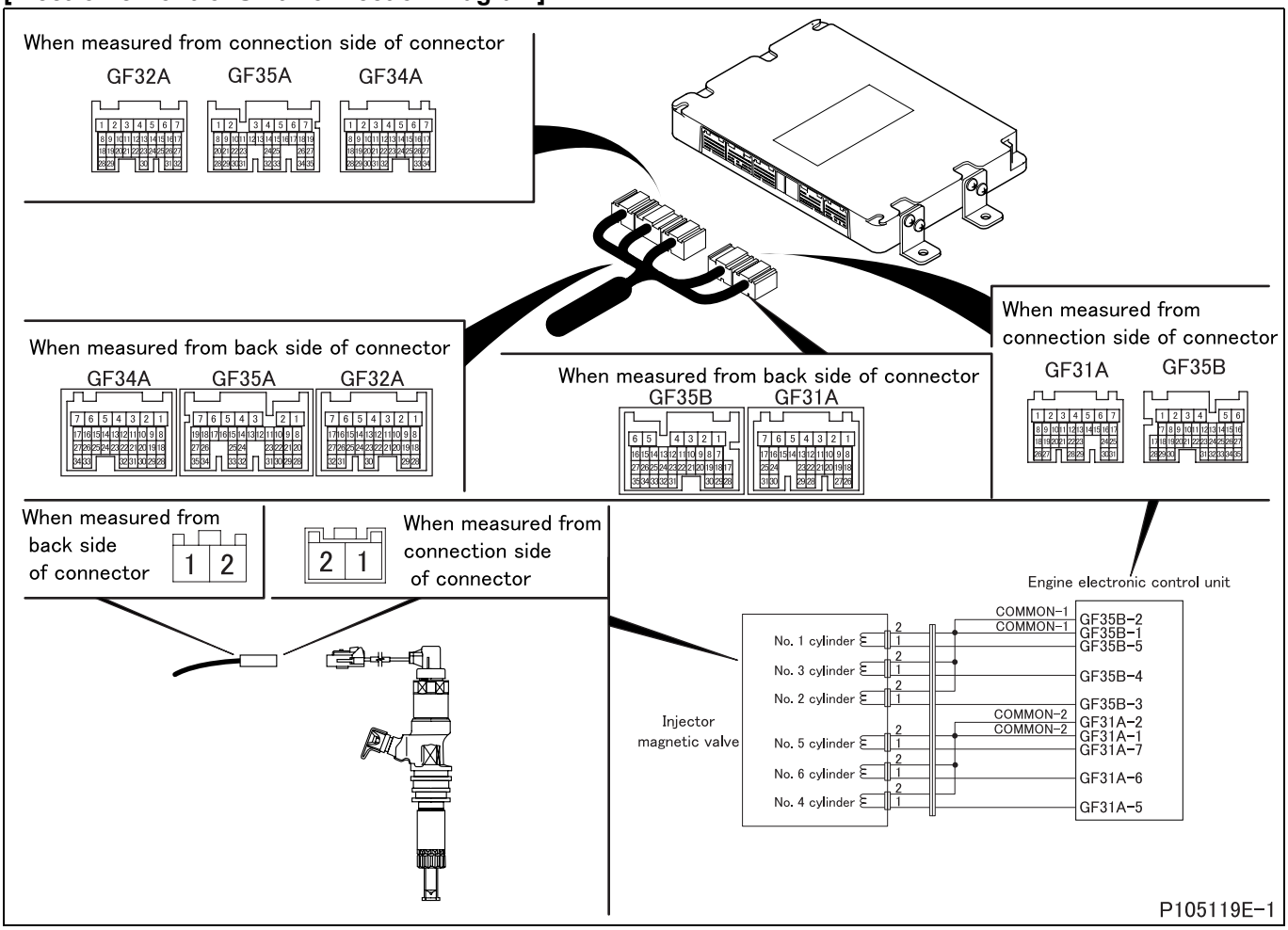

[Parts Identification and Location]

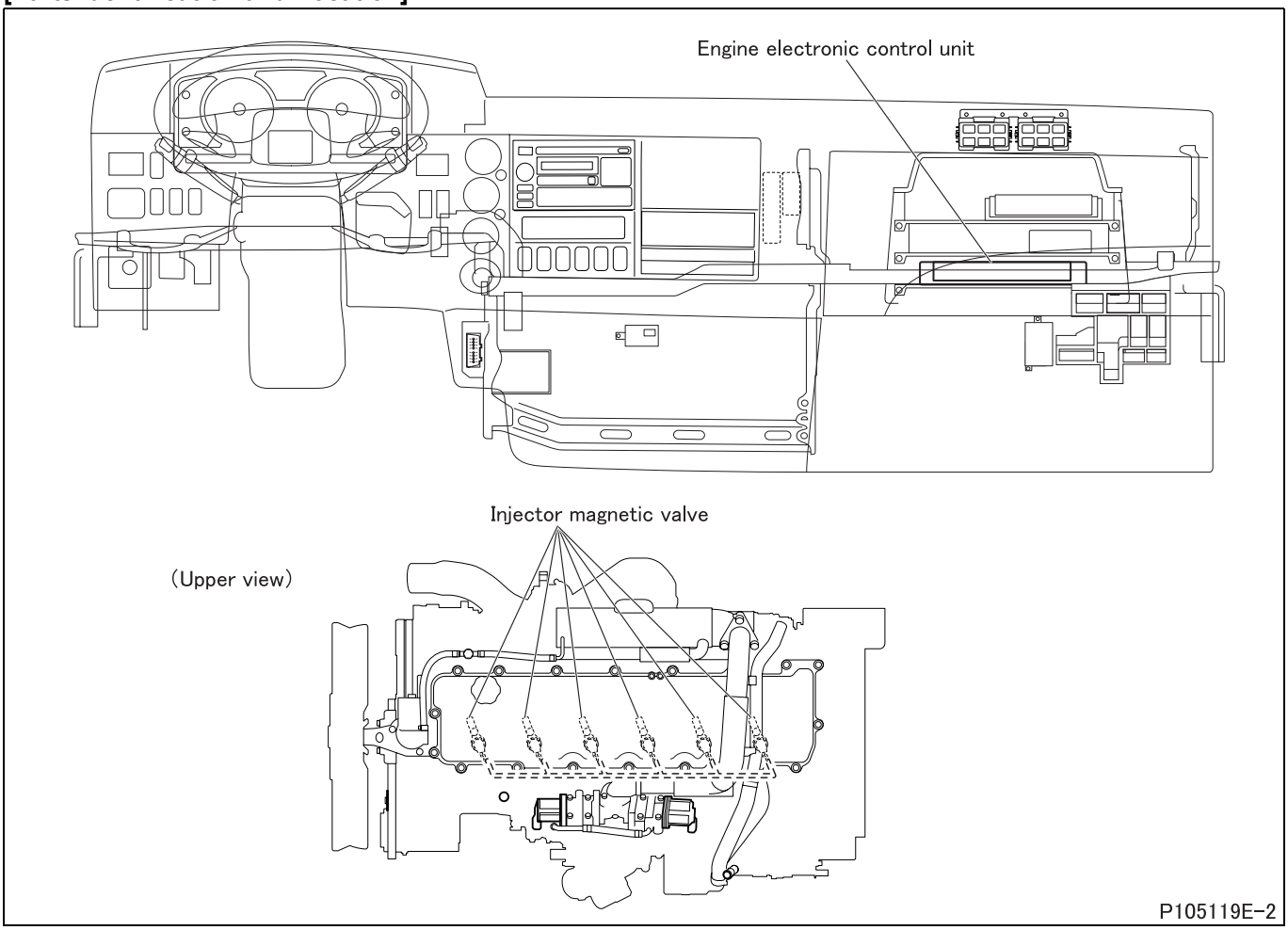

[Fault diagnosis]

- Perform checks in the sequence of the following steps.

Step 1	Inspection items		Inspection by control data
	Maintenance item		Perform following actuator test. • Injector magnetic valve (No. 1 cylinder): perform item No. BB “Injector Test 1.” • Injector magnetic valve (No. 3 cylinder): perform item No. BD “Injector Test 3.” • Injector magnetic valve (No. 5 cylinder): perform item No. BC “Injector Test 2.”
	Inspection condition		• Vehicle: stationary (vehicle speed 0 km/h {0 MPH}) • Engine start: At idle • Transmission: neutral • The current diagnosis code does not occur.
	Requirements		Injector is stopped during actuator test with engine changed in operating condition (vibrating).
	Inspection result (Is the judging standard satisfied?)	YES	Go to transient fault (See Gr00.).
		NO	Go to step 2.

Step 2	Inspection items		Inspection by electronic control unit connector
	Maintenance item		Measure values of voltage between following connector terminals • Injector magnetic valve (No. 1 cylinder): (GF35B) terminal No. 1 or 2 (+) and (GF35B) terminal No. 5 (–). • Injector magnetic valve (No. 3 cylinder): (GF35B) terminal No. 1 or 2 (+) and (GF35B) terminal No. 4 (–). • Injector magnetic valve (No. 5 cylinder): (GF31A) terminal No. 1 or 2 (+) and (GF31A) terminal No. 7 (–).
	Inspection condition		Disconnect electronic control unit from harness and measure from connection side of harness connector.
	Requirements		0.45 ± 0.1 Ω (20°C {68°F})
	Inspection result (Is the judging standard satisfied?)	YES	Go to step 3.
		NO	Go to step 4.

Step 3	Inspection items		Inspection of electronic control unit connector
	Maintenance item		Inspection of connector
	Inspection condition		–
	Requirements		• Connector is properly connected. • No trace of water entry is found. • No corrosion is found in terminal. • Connection to terminal is appropriate.
	Inspection result (Is the judging standard satisfied?)	YES	Go to step 8.
		NO	Modify connector.

Step 4	Inspection items		Inspection of injector magnetic valve connector
	Maintenance item		Inspection of connector
	Inspection condition		–
	Requirements		• Connector is properly connected. • Connection to terminal is appropriate.
	Inspection result (Is the judging standard satisfied?)	YES	Go to step 5.
		NO	Modify connector.

Step 5	Inspection items		Inspection of injector magnetic valve unit
	Maintenance item		Measure value of resistance between connector terminal No. 1 and 2.
	Inspection condition		–
	Requirements		0.45 ± 0.1 Ω (20°C {68°F})
	Inspection result (Is the judging standard satisfied?)	YES	Go to step 6.
		NO	Replacement of injector

<Step 5 inspection diagram>

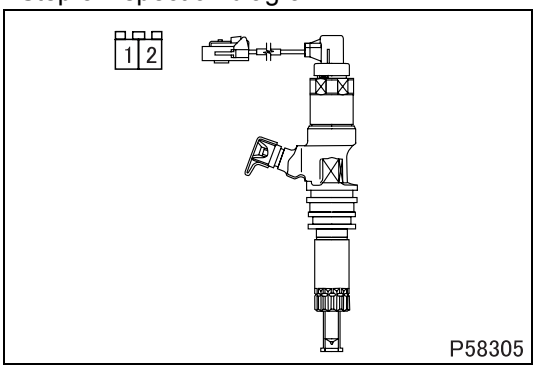

Step 6	Inspection items		Inspection of harness between injector magnetic valve and electronic control unit (power supply)
	Maintenance item		Check circuit between following connector terminals. • Injector magnetic valve (No. 1 cylinder): injector magnetic valve connector terminal No. 2 - electronic control unit connector (GF35B) terminal No. 1 or 2 • Injector magnetic valve (No. 3 cylinder): injector magnetic valve connector terminal No. 2 - electronic control unit connector (GF35B) terminal No. 1 or 2 • Injector magnetic valve (No. 5 cylinder): magnetic valve connector terminal No. 2 - electronic control unit connector (GF31A) terminal No. 1 or 2
	Inspection condition		Disconnect each device from harness and measure from connection side of harness connector.
	Requirements		There is continuity.
	Inspection result (Is the judging standard satisfied?)	YES	Go to step 7.
		NO	Modify harness.

Step 7	Inspection items		Inspection of harness between injector magnetic valve and electronic control unit (ground)
	Maintenance item		Check circuit between following connector terminals. • Injector magnetic valve (No. 1 cylinder): injector magnetic valve connector terminal No. 1 - electronic control unit connector (GF35B) terminal No. 5 • Injector magnetic valve (No. 3 cylinder): injector magnetic valve connector terminal No. 1 - electronic control unit connector (GF35B) terminal No. 4 • Injector magnetic valve (No. 5 cylinder): injector magnetic valve connector terminal No. 1 - electronic control unit connector (GF31A) terminal No. 7
	Inspection condition		Disconnect each device from harness and measure from connection side of harness connector.
	Requirements		There is continuity.
	Inspection result (Is the judging standard satisfied?)	YES	Go to step 8.
		NO	Modify harness.

Step 8	Inspection items		Inspection by control data
	Maintenance item		Perform following actuator test. • Injector magnetic valve (No. 1 cylinder): Perform item No. BB “Injector Test 1.” • Injector magnetic valve (No. 3 cylinder): Perform item No. BD “Injector Test 3.” • Injector magnetic valve (No. 5 cylinder): Perform item No. BC “Injector Test 2.”
	Inspection condition		• Vehicle: stationary (vehicle speed 0 km/h {0 MPH}) • Engine start: At idle • Transmission: neutral • The current diagnosis code does not occur.
	Requirements		Injector is stopped during actuator test with engine changed in operating condition (vibrating).
	Inspection result (Is the judging standard satisfied?)	YES	Go to transient fault (See Gr00.).
		NO	Replacement of electronic control unit

[Fault code]
Diagnosis code: P2149/Flash code: 82
[Monitor]
Injector magnetic valve (No. 2, 4 and 6 cylinders)
[Fault (outline)]
Open circuit (No. 2, 4 and 6 cylinders)
[Diagnosis check]
- Injector magnetic valve (No. 2, 4 and 6 cylinders) circuit is monitored for fault.

[Code generation condition]
- Open-circuit of injector magnetic valve (No. 2, 4 and 6 cylinders) is detected.
  (Warning lamp is lit and diagnosis code is displayed on first establishment of code generation condition.)

[Diagnosis check timing]
- When code generation condition is established after starter switch ON

[Diagnostic requirement]
- 2 seconds passed after starter switch ON
- 2 seconds passed after cranking
- Battery voltage: normal
- Injection time command: available
- Engine speed sensor: normal
- Sub-CPU: in order
- Injector charge circuit: ON
- Post injection: none

[Control effected by electronic control unit during fault]
- Exhaust gas recirculation control is stopped.
- Throttle control is stopped.
- Diesel particulate filter regeneration (manual or automatic) is stopped.
- Auto cruise control is stopped.
- Learning of FCCB (fuel control cylinder balance) is inhibited.
- 3-cylinder operation (No. 1, 3 and 5 cylinders)

[Probable cause of trouble]
- Open-circuit or short-circuit of harness between electronic control unit and injector magnetic valve (No. 2, 4 and 6 cylinders)
- Abnormality of each connector
- Abnormality of injector magnetic valve (No. 2, 4 and 6 cylinders)
- Abnormality in electronic control unit

[Recoverability]
<Control during fault>
- Recovered if signal becomes normal with starter switch in ON position.

<Warning lamp>
- Extinguished at 4th driving cycle after normal signal is input.

<Fault code>
- Automatically cleared at 40th warm up cycle after warning lamp is extinguished.
  (To clear as desired, erase from the memory.)

Driving cycle : “Starter switch ON to start engine till starter switch OFF” constitutes 1 driving cycle.
Warm up cycle : “Starter switch ON to start engine till starter switch OFF after coolant temperature increased and engine warmed up” constitutes 1 warm up cycle.

[Electronic Control Unit Connection Diagram]

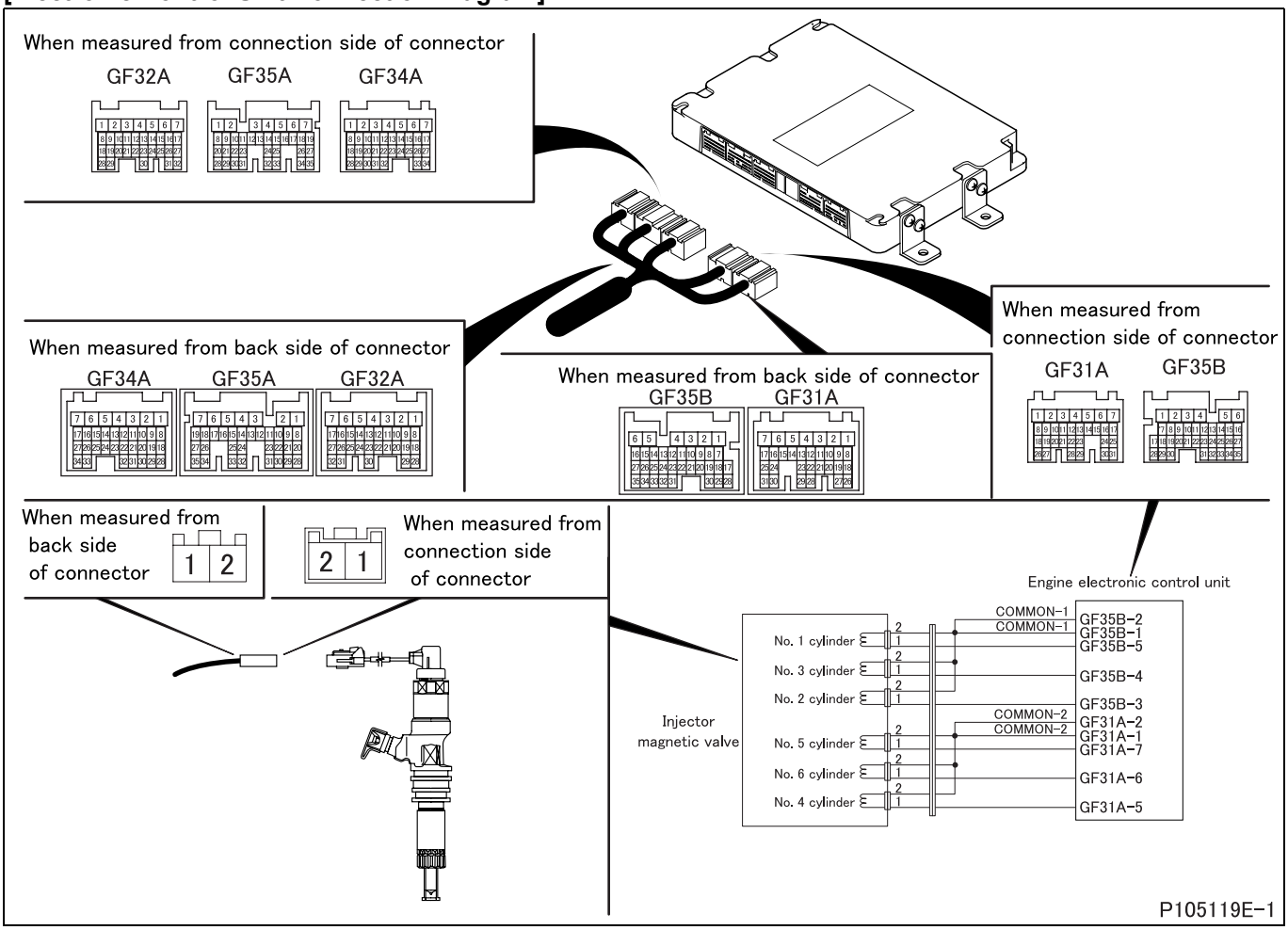

[Parts Identification and Location]

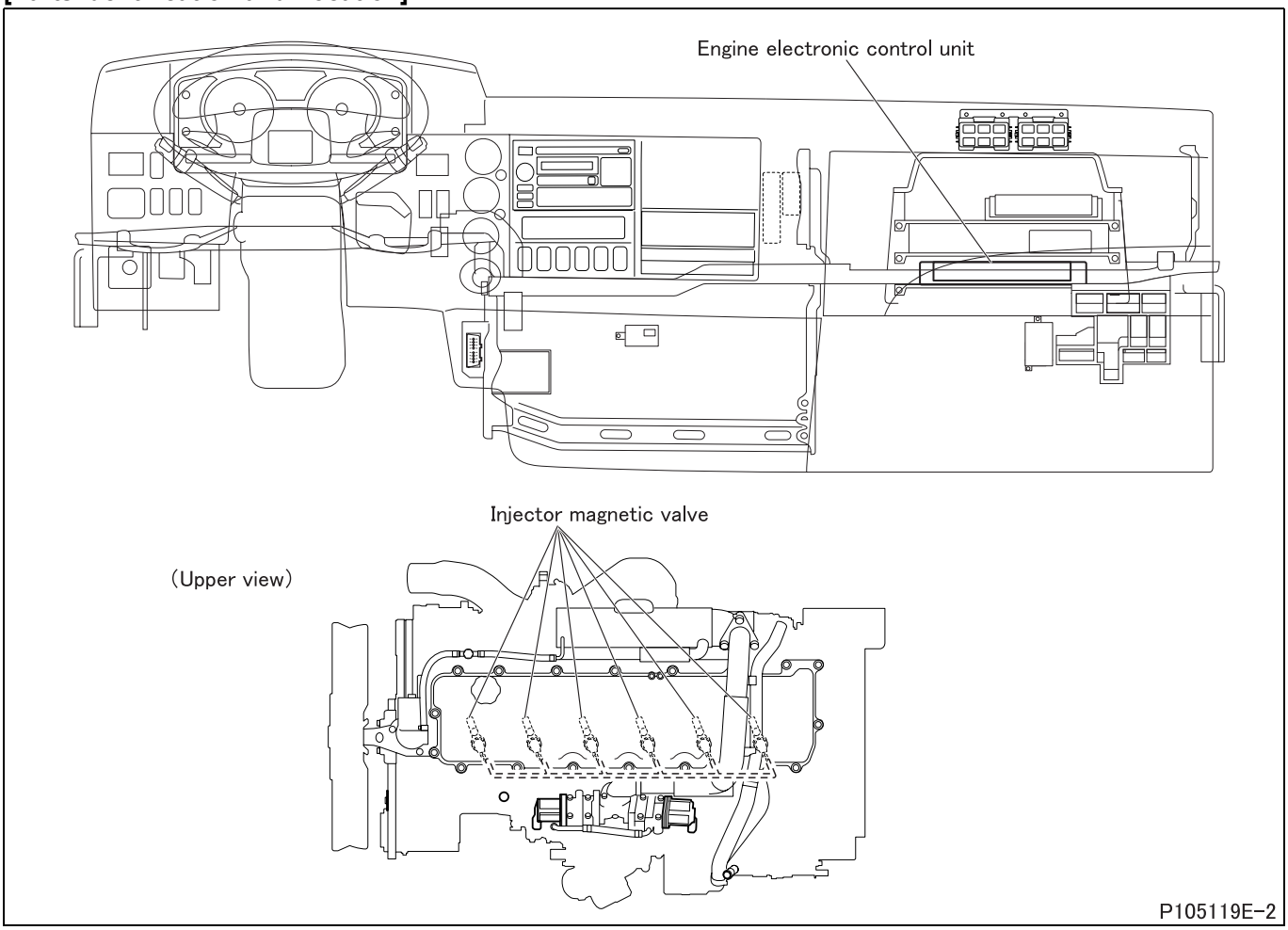

[Fault diagnosis]

- Perform checks in the sequence of the following steps.

Step 1	Inspection items		Inspection by control data
	Maintenance item		Perform following actuator test. • Injector magnetic valve (No. 2 cylinder): Perform item No. BF “Injector Test 5”. • Injector magnetic valve (No. 4 cylinder): Perform item No. C0 “Injector Test 6”. • Injector magnetic valve (No. 6 cylinder): Perform item No. BE “Injector Test 4”.
	Inspection condition		• Vehicle: stationary (vehicle speed 0 km/h {0 MPH}) • Engine start: At idle • Transmission: neutral • The current diagnosis code does not occur.
	Requirements		Injector is stopped during actuator test with engine changed in operating condition (vibrating).
	Inspection result (Is the judging standard satisfied?)	YES	Go to transient fault (See Gr00.).
		NO	Go to step 2.

Step 2	Inspection items		Inspection by electronic control unit connector
	Maintenance item		Measure values of voltage between following connector terminals • Injector magnetic valve (No. 2 cylinder): (GF35B) terminal No. 1 or 2 (+) and (GF35B) terminal No. 3 (–) • Injector magnetic valve (No. 4 cylinder): (GF31A) terminal No. 1 or 2 (+) and (GF31A) terminal No. 5 (–) • Injector magnetic valve (No. 6 cylinder): (GF31A) terminal No. 1 or 2 (+) and (GF31A) terminal No. 6 (–)
	Inspection condition		Disconnect electronic control unit from harness and measure from connection side of harness connector.
	Requirements		0.45 ± 0.1 Ω (20°C {68°F})
	Inspection result (Is the judging standard satisfied?)	YES	Go to step 3.
		NO	Go to step 4.

Step 3	Inspection items		Inspection of electronic control unit connector
	Maintenance item		Inspection of connector
	Inspection condition		–
	Requirements		• Connector is properly connected. • No trace of water entry is found. • No corrosion is found in terminal. • Connection to terminal is appropriate.
	Inspection result (Is the judging standard satisfied?)	YES	Go to step 8.
		NO	Modify connector.

Step 4	Inspection items		Inspection of injector magnetic valve connector
	Maintenance item		Inspection of connector
	Inspection condition		–
	Requirements		• Connector is properly connected. • Connection to terminal is appropriate.
	Inspection result (Is the judging standard satisfied?)	YES	Go to step 5.
		NO	Modify connector.

Step 5	Inspection items		Inspection of injector magnetic valve unit
	Maintenance item		Measure value of resistance between connector terminal No. 1 and 2.
	Inspection condition		–
	Requirements		0.45 ± 0.1 Ω (20°C {68°F})
	Inspection result (Is the judging standard satisfied?)	YES	Go to step 6.
		NO	Replacement of injector

<Step 5 inspection diagram>

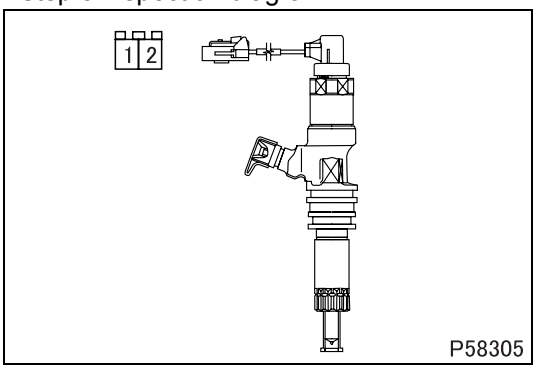

Step 6	Inspection items		Inspection of harness between injector magnetic valve and electronic control unit (power supply)
	Maintenance item		Check circuit between following connector terminals. • Injector magnetic valve (No. 2 cylinder): injector magnetic valve connector terminal No. 2 - electronic control unit connector (GF35B) terminal No. 1 or 2 • Injector magnetic valve (No. 4 cylinder): injector magnetic valve connector terminal No. 2 - electronic control unit connector (GF31A) terminal No. 1 or 2 • Injector magnetic valve (No. 6 cylinder): injector magnetic valve connector terminal No. 2 - electronic control unit connector (GF31A) terminal No. 1 or 2
	Inspection condition		Disconnect each device from harness and measure from connection side of harness connector.
	Requirements		There is continuity.
	Inspection result (Is the judging standard satisfied?)	YES	Go to step 7.
		NO	Modify harness.

Step 7	Inspection items		Inspection of harness between injector magnetic valve and electronic control unit (ground)
	Maintenance item		Check circuit between following connector terminals. • Injector magnetic valve (No. 2 cylinder): injector magnetic valve connector terminal No. 1 - electronic control unit connector (GF35B) terminal No. 3 • Injector magnetic valve (No. 4 cylinder): injector magnetic valve connector terminal No. 1 - electronic control unit connector (GF31A) terminal No. 5 • Injector magnetic valve (No. 6 cylinder): injector magnetic valve connector terminal No. 1 - electronic control unit connector (GF31A) terminal No. 6
	Inspection condition		Disconnect each device from harness and measure from connection side of harness connector.
	Requirements		There is continuity.
	Inspection result (Is the judging standard satisfied?)	YES	Go to step 8.
		NO	Modify harness.

Step 8	Inspection items		Inspection by control data
	Maintenance item		Perform following actuator test. • Injector magnetic valve (No. 2 cylinder): Perform item No. BF “Injector Test 5”. • Injector magnetic valve (No. 4 cylinder): Perform item No. C0 “Injector Test 6”. • Injector magnetic valve (No. 6 cylinder): Perform item No. BE “Injector Test 4”.
	Inspection condition		• Vehicle: stationary (vehicle speed 0 km/h {0 MPH}) • Engine start: At idle • Transmission: neutral • The current diagnosis code does not occur.
	Requirements		Injector is stopped during actuator test with engine changed in operating condition (vibrating).
	Inspection result (Is the judging standard satisfied?)	YES	Go to transient fault (See Gr00.).
		NO	Replacement of electronic control unit

[Fault code]
Diagnosis code: P2150/Flash code: 82
[Monitor]
Injector magnetic valve (No. 2, 4 and 6 cylinders)
[Fault (outline)]
- Injector short circuit ground
- Injector open circuit
  (No. 2, 4 and 6 cylinders)

[Diagnosis check]
- Injector magnetic valve (No. 2, 4 and 6 cylinders) circuit is monitored for fault.

[Code generation condition]
- Short-circuit to ground of injector magnetic valve (No. 2, 4 and 6 cylinders) is detected.
  (Warning lamp is lit and diagnosis code is displayed on first establishment of code generation condition.)

[Diagnosis check timing]
- When code generation condition is established after starter switch ON

[Diagnostic requirement]
- 2 seconds passed after starter switch ON
- 2 seconds passed after cranking
- Battery voltage: normal
- Post injection: none
- Engine speed sensor: normal

[Control effected by electronic control unit during fault]
- Injection quantity is limited.
- Main injection only is allowed.
- Common rail pressure is limited.
- Exhaust gas recirculation control is stopped.
- Throttle control is stopped.
- Diesel particulate filter regeneration (manual or automatic) is stopped.
- Auto cruise control is stopped.
- Learning of FCCB (fuel control cylinder balance) is inhibited.
- 3-cylinder operation (No. 1, 3 and 5 cylinders)

[Probable cause of trouble]
- Open-circuit or short-circuit of harness between electronic control unit and injector magnetic valve (No. 2, 4 and 6 cylinders)
- Abnormality of each connector
- Abnormality of injector magnetic valve (No. 2, 4 and 6 cylinders)
- Abnormality in electronic control unit

[Recoverability]
<Control during fault>
- Recovered if signal becomes normal when starter switch is turned OFF to ON (power supply resumed to electronic control unit).

<Warning lamp>
- Extinguished at 4th driving cycle after normal signal is input.

<Fault code>
- Automatically cleared at 40th warm up cycle after warning lamp is extinguished.
  (To clear as desired, erase from the memory.)

Driving cycle : “Starter switch ON to start engine till starter switch OFF” constitutes 1 driving cycle.
Warm up cycle : “Starter switch ON to start engine till starter switch OFF after coolant temperature increased and engine warmed up” constitutes 1 warm up cycle.

[Electronic Control Unit Connection Diagram]

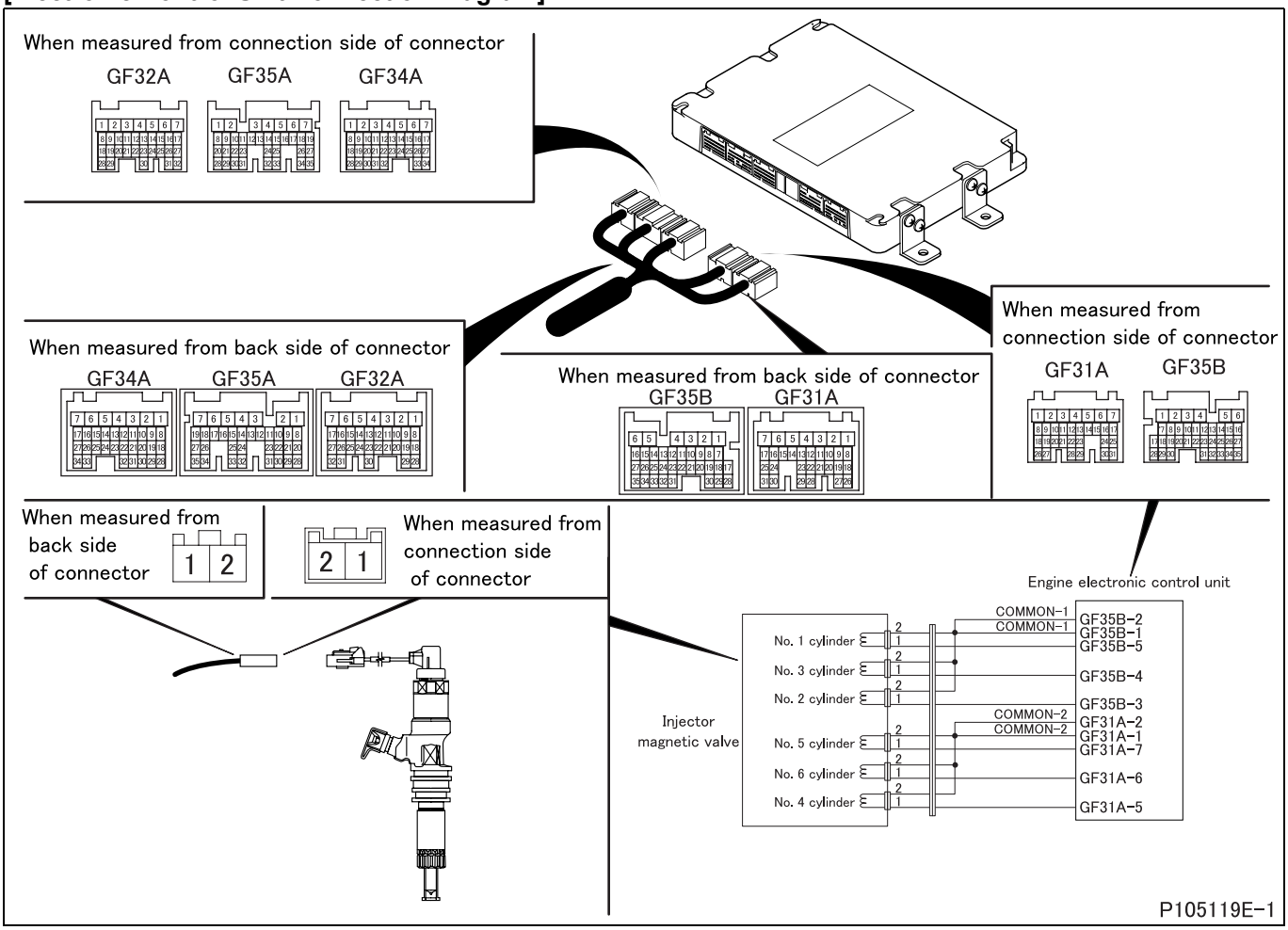

[Parts Identification and Location]

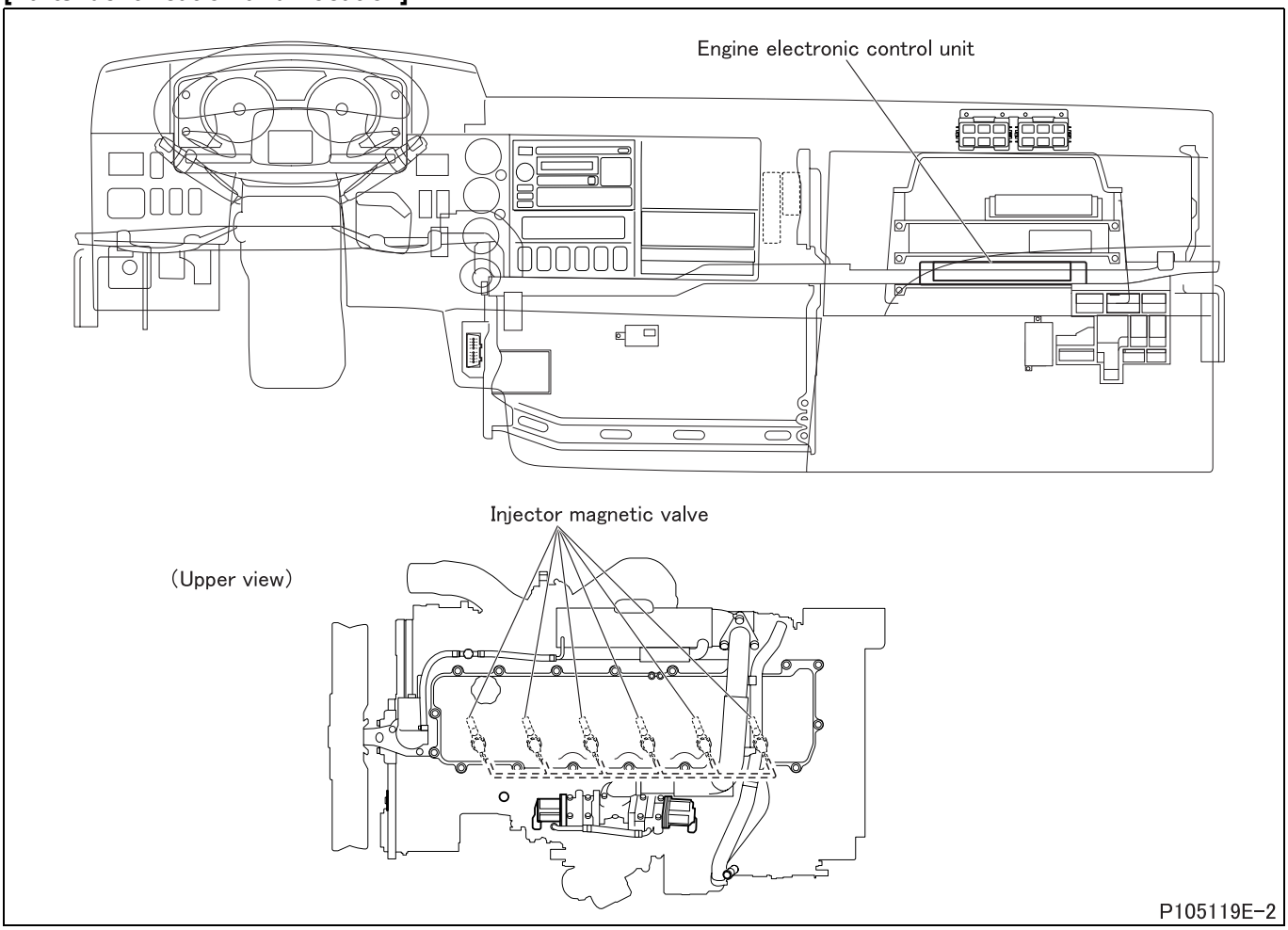

[Fault diagnosis]

- Perform checks in the sequence of the following steps.

Step 1	Inspection items		Inspection by control data
	Maintenance item		Perform following actuator test. • Injector magnetic valve (No. 2 cylinder): perform item No. BF “Injector Test 5”. • Injector magnetic valve (No. 4 cylinder): perform item No. C0 “Injector Test 6”. • Injector magnetic valve (No. 6 cylinder): perform item No. BE “Injector Test 4”.
	Inspection condition		• Vehicle: stationary (vehicle speed 0 km/h {0 MPH}) • Engine start: At idle • Transmission: neutral • The current diagnosis code does not occur.
	Requirements		Injector is stopped during actuator test with engine changed in operating condition (vibrating).
	Inspection result (Is the judging standard satisfied?)	YES	Go to transient fault (See Gr00.).
		NO	Go to step 2.

Step 2	Inspection items		Inspection by electronic control unit connector
	Maintenance item		Measure values of voltage between following connector terminals • Injector magnetic valve (No. 2 cylinder): (GF35B) terminal No. 1 or 2 (+) and (GF35B) terminal No. 3 (–) • Injector magnetic valve (No. 4 cylinder): (GF31A) terminal No. 1 or 2 (+) and (GF31A) terminal No. 5 (–) • Injector magnetic valve (No. 6 cylinder): (GF31A) terminal No. 1 or 2 (+) and (GF31A) terminal No. 6 (–)
	Inspection condition		Disconnect electronic control unit from harness and measure from connection side of harness connector.
	Requirements		0.45 ± 0.1 Ω (20°C {68°F})
	Inspection result (Is the judging standard satisfied?)	YES	Go to step 3.
		NO	Go to step 4.

Step 3	Inspection items		Inspection of electronic control unit connector
	Maintenance item		Inspection of connector
	Inspection condition		–
	Requirements		• Connector is properly connected. • No trace of water entry is found. • No corrosion is found in terminal. • Connection to terminal is appropriate.
	Inspection result (Is the judging standard satisfied?)	YES	Go to step 8.
		NO	Modify connector.

Step 4	Inspection items		Inspection of injector magnetic valve connector
	Maintenance item		Inspection of connector
	Inspection condition		–
	Requirements		• Connector is properly connected. • Connection to terminal is appropriate.
	Inspection result (Is the judging standard satisfied?)	YES	Go to step 5.
		NO	Modify connector.

Step 5	Inspection items		Inspection of injector magnetic valve unit
	Maintenance item		Measure value of resistance between connector terminal No. 1 and 2.
	Inspection condition		–
	Requirements		0.45 ± 0.1 Ω (20°C {68°F})
	Inspection result (Is the judging standard satisfied?)	YES	Go to step 6.
		NO	Replacement of injector

<Step 5 inspection diagram>

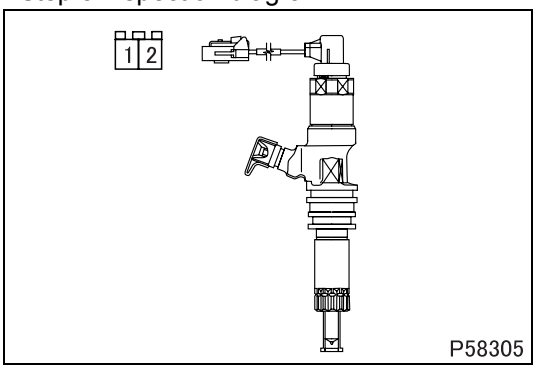

Step 6	Inspection items		Inspection of harness between injector magnetic valve and electronic control unit (power supply)
	Maintenance item		Check circuit between following connector terminals. • Injector magnetic valve (No. 2 cylinder): injector magnetic valve connector terminal No. 2 - electronic control unit connector (GF35B) terminal No. 1 or 2 • Injector magnetic valve (No. 4 cylinder): injector magnetic valve connector terminal No. 2 - electronic control unit connector (GF31A) terminal No. 1 or 2 • Injector magnetic valve (No. 6 cylinder): injector magnetic valve connector terminal No. 2 - electronic control unit connector (GF31A) terminal No. 1 or 2
	Inspection condition		Disconnect each device from harness and measure from connection side of harness connector.
	Requirements		There is continuity.
	Inspection result (Is the judging standard satisfied?)	YES	Go to step 7.
		NO	Modify harness.

Step 7	Inspection items		Inspection of harness between injector magnetic valve and electronic control unit (ground)
	Maintenance item		Check circuit between following connector terminals. • Injector magnetic valve (No. 2 cylinder): injector magnetic valve connector terminal No. 1 - electronic control unit connector (GF35B) terminal No. 3 • Injector magnetic valve (No. 4 cylinder): injector magnetic valve connector terminal No. 1 - electronic control unit connector (GF31A) terminal No. 5 • Injector magnetic valve (No. 6 cylinder): injector magnetic valve connector terminal No. 1 - electronic control unit connector (GF31A) terminal No. 6
	Inspection condition		Disconnect each device from harness and measure from connection side of harness connector.
	Requirements		There is continuity.
	Inspection result (Is the judging standard satisfied?)	YES	Go to step 8.
		NO	Modify harness.

Step 8	Inspection items		Inspection by control data
	Maintenance item		Perform following actuator test. • Injector magnetic valve (No. 2 cylinder): Perform item No. BF “Injector Test 5”. • Injector magnetic valve (No. 4 cylinder): Perform item No. C0 “Injector Test 6”. • Injector magnetic valve (No. 6 cylinder): Perform item No. BE “Injector Test 4”.
	Inspection condition		• Vehicle: stationary (vehicle speed 0 km/h {0 MPH}) • Engine start: At idle • Transmission: neutral • The current diagnosis code does not occur.
	Requirements		Injector is stopped during actuator test with engine changed in operating condition (vibrating).
	Inspection result (Is the judging standard satisfied?)	YES	Go to transient fault (See Gr00.).
		NO	Replacement of electronic control unit

[Fault code]
Diagnosis code: P2151/Flash code: 82
[Monitor]
Injector magnetic valve (No. 2, 4 and 6 cylinders)
[Fault (outline)]
Injector short circuit battery (No. 2, 4 and 6 cylinders)
[Diagnosis check]
- Injector magnetic valve (No. 2, 4 and 6 cylinders) circuit is monitored for fault.

[Code generation condition]
- Short-circuit to battery of injector magnetic valve (No. 2, 4 and 6 cylinders) is detected.
  (Warning lamp is lit and diagnosis code is displayed on first establishment of code generation condition.)

[Diagnosis check timing]
- When code generation condition is established after starter switch ON

[Diagnostic requirement]
- 2 seconds passed after starter switch ON
- 2 seconds passed after cranking
- Battery voltage: normal
- Post injection: none
- Engine speed sensor: normal

[Control effected by electronic control unit during fault]
- Injection quantity is limited.
- Main injection only is allowed.
- Common rail pressure is limited.
- Exhaust gas recirculation control is stopped.
- Throttle control is stopped.
- Diesel particulate filter regeneration (manual or automatic) is stopped.
- Auto cruise control is stopped.
- Learning of FCCB (fuel control cylinder balance) is inhibited.
- 3-cylinder operation (No. 1, 3 and 5 cylinders)

[Probable cause of trouble]
- Open-circuit or short-circuit of harness between electronic control unit and injector magnetic valve (No. 2, 4 and 6 cylinders)
- Abnormality of each connector
- Abnormality of injector magnetic valve (No. 2, 4 and 6 cylinders)
- Abnormality in electronic control unit

[Recoverability]
<Control during fault>
- Recovered if signal becomes normal when starter switch is turned OFF to ON (power supply resumed to electronic control unit).

<Warning lamp>
- Extinguished at 4th driving cycle after normal signal is input.

<Fault code>
- Automatically cleared at 40th warm up cycle after warning lamp is extinguished.
  (To clear as desired, erase from the memory.)

Driving cycle : “Starter switch ON to start engine till starter switch OFF” constitutes 1 driving cycle.
Warm up cycle : “Starter switch ON to start engine till starter switch OFF after coolant temperature increased and engine warmed up” constitutes 1 warm up cycle.

[Electronic Control Unit Connection Diagram]

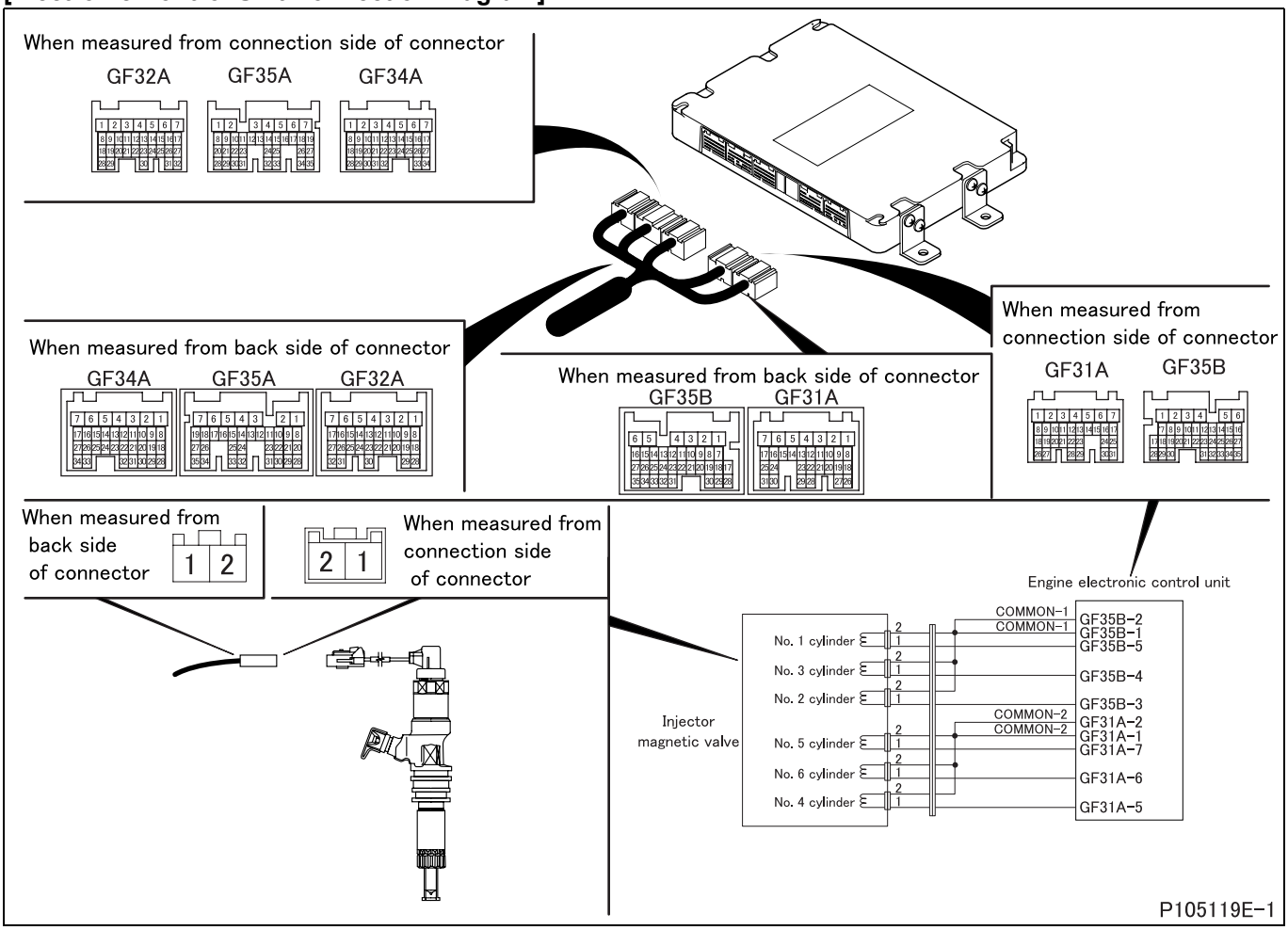

[Parts Identification and Location]

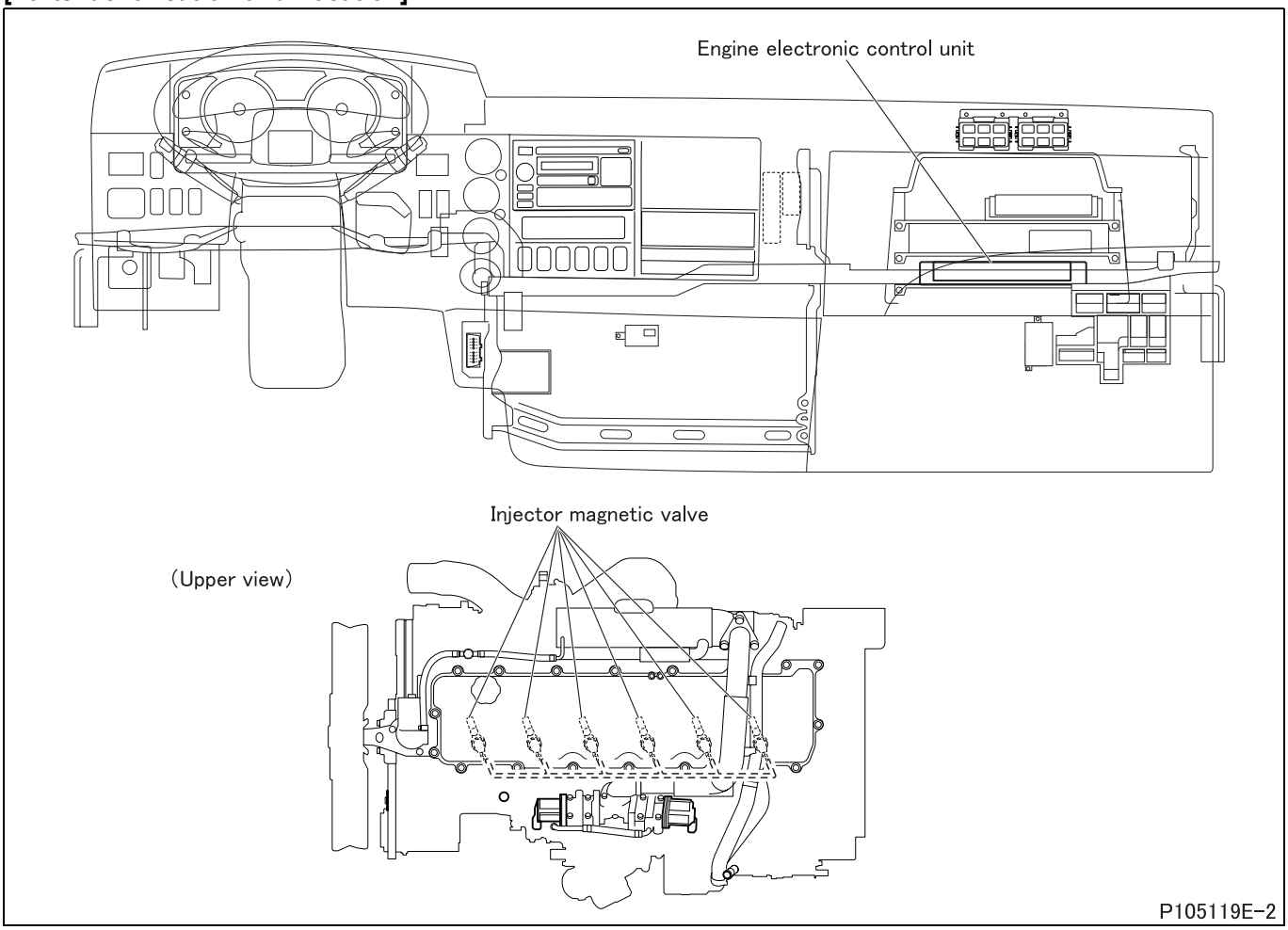

[Fault diagnosis]

- Perform checks in the sequence of the following steps.

Step 1	Inspection items		Inspection by control data
	Maintenance item		Perform following actuator test. • Injector magnetic valve (No. 2 cylinder): Perform item No. BF “Injector Test 5”. • Injector magnetic valve (No. 4 cylinder): Perform item No. C0 “Injector Test 6”. • Injector magnetic valve (No. 6 cylinder): Perform item No. BE “Injector Test 4”.
	Inspection condition		• Vehicle: stationary (vehicle speed 0 km/h {0 MPH}) • Engine start: At idle • Transmission: neutral • The current diagnosis code does not occur.
	Requirements		Injector is stopped during actuator test with engine changed in operating condition (vibrating).
	Inspection result (Is the judging standard satisfied?)	YES	Go to transient fault (See Gr00.).
		NO	Go to step 2.

Step 2	Inspection items		Inspection by electronic control unit connector
	Maintenance item		Measure values of voltage between following connector terminals • Injector magnetic valve (No. 2 cylinder): (GF35B) terminal No. 1 or 2 (+) and (GF35B) terminal No. 3 (–) • Injector magnetic valve (No. 4 cylinder): (GF31A) terminal No. 1 or 2 (+) and (GF31A) terminal No. 5 (–) • Injector magnetic valve (No. 6 cylinder): (GF31A) terminal No. 1 or 2 (+) and (GF31A) terminal No. 6 (–)
	Inspection condition		Disconnect electronic control unit from harness and measure from connection side of harness connector.
	Requirements		0.45 ± 0.1 Ω (20°C {68°F})
	Inspection result (Is the judging standard satisfied?)	YES	Go to step 3.
		NO	Go to step 4.

Step 3	Inspection items		Inspection of electronic control unit connector
	Maintenance item		Inspection of connector
	Inspection condition		–
	Requirements		• Connector is properly connected. • No trace of water entry is found. • No corrosion is found in terminal. • Connection to terminal is appropriate.
	Inspection result (Is the judging standard satisfied?)	YES	Go to step 8.
		NO	Modify connector.

Step 4	Inspection items		Inspection of injector magnetic valve connector
	Maintenance item		Inspection of connector
	Inspection condition		–
	Requirements		• Connector is properly connected. • Connection to terminal is appropriate.
	Inspection result (Is the judging standard satisfied?)	YES	Go to step 5.
		NO	Modify connector.

Step 5	Inspection items		Inspection of injector magnetic valve unit
	Maintenance item		Measure value of resistance between connector terminal No. 1 and 2.
	Inspection condition		–
	Requirements		0.45 ± 0.1 Ω (20°C {68°F})
	Inspection result (Is the judging standard satisfied?)	YES	Go to step 6.
		NO	Replacement of injector

<Step 5 inspection diagram>

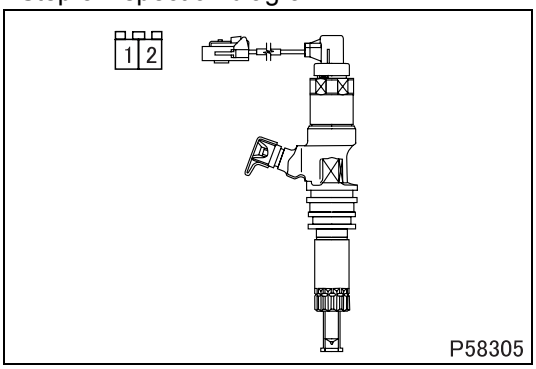

Step 6	Inspection items		Inspection of harness between injector magnetic valve and electronic control unit (power supply)
	Maintenance item		Check circuit between following connector terminals. • Injector magnetic valve (No. 2 cylinder): injector magnetic valve connector terminal No. 2 - electronic control unit connector (GF35B) terminal No. 1 or 2 • Injector magnetic valve (No. 4 cylinder): injector magnetic valve connector terminal No. 2 - electronic control unit connector (GF31A) terminal No. 1 or 2 • Injector magnetic valve (No. 6 cylinder): injector magnetic valve connector terminal No. 2 - electronic control unit connector (GF31A) terminal No.1 or 2.
	Inspection condition		Disconnect each device from harness and measure from connection side of harness connector.
	Requirements		There is continuity.
	Inspection result (Is the judging standard satisfied?)	YES	Go to step 7.
		NO	Modify harness.

Step 7	Inspection items		Inspection of harness between injector magnetic valve and electronic control unit (ground)
	Maintenance item		Check circuit between following connector terminals. • Injector magnetic valve (No. 2 cylinder): injector magnetic valve connector terminal No. 1 - electronic control unit connector (GF35B) terminal No. 3 • Injector magnetic valve (No. 4 cylinder): injector magnetic valve connector terminal No. 1 - electronic control unit connector (GF31A) terminal No. 5 • Injector magnetic valve (No. 6 cylinder): injector magnetic valve connector terminal No. 1 - electronic control unit connector (GF31A) terminal No. 6.
	Inspection condition		Disconnect each device from harness and measure from connection side of harness connector.
	Requirements		There is continuity.
	Inspection result (Is the judging standard satisfied?)	YES	Go to step 8.
		NO	Modify harness.

Step 8	Inspection items		Inspection by control data
	Maintenance item		Perform following actuator test. • Injector magnetic valve (No. 2 cylinder): Perform item No. BF “Injector Test 5”. • Injector magnetic valve (No. 4 cylinder): Perform item No. C0 “Injector Test 6”. • Injector magnetic valve (No. 6 cylinder): Perform item No. BE “Injector Test 4”.
	Inspection condition		• Vehicle: stationary (vehicle speed 0 km/h {0 MPH}) • Engine start: At idle • Transmission: neutral • The current diagnosis code does not occur.
	Requirements		Injector is stopped during actuator test with engine changed in operating condition (vibrating).
	Inspection result (Is the judging standard satisfied?)	YES	Go to transient fault (See Gr00.).
		NO	Replacement of electronic control unit

[Fault code]
Diagnosis code: P2153/Flash code: 82
[Monitor]
Abnormality in injector magnetic valve driving circuit charge voltage
[Fault (outline)]
Charge rate inadequate
[Diagnosis check]
- Injector magnetic valve driving circuit charge voltage in engine electronic control unit is monitored.

[Code generation condition]
- Charge voltage is judged insufficient.
  (Warning lamp is lit and diagnosis code is displayed on first establishment of code generation condition.)

[Diagnosis check timing]
- When code generation condition is established after starter switch ON

[Diagnostic requirement]
- 2 seconds passed after starter switch ON
- Battery voltage: normal
- Sub-CPU: in order
- Charge circuit: active

[Control effected by electronic control unit during fault]
- Common rail pressure is limited.
- Fault detection for controller area net work communication is stopped.
- Idle up control is stopped.
- Learning of FCCB (fuel control cylinder balance) is inhibited.
- Idle up speed is controlled to backup value (800 rpm).

[Probable cause of trouble]
- Abnormality in electronic control unit (replacement of electronic control unit)

[Recoverability]
<Control during fault>
- Recovered if signal becomes normal when starter switch is turned OFF to ON (power supply resumed to electronic control unit).

<Warning lamp>
- Extinguished at 4th driving cycle after normal signal is input.

<Fault code>
- Automatically cleared at 40th warm up cycle after warning lamp is extinguished.
  (To clear as desired, erase from the memory.)

Driving cycle : “Starter switch ON to start engine till starter switch OFF” constitutes 1 driving cycle.
Warm up cycle : “Starter switch ON to start engine till starter switch OFF after coolant temperature increased and engine warmed up” constitutes 1 warm up cycle.

[Fault code]
Diagnosis code: P2154/Flash code: 82
[Monitor]
Abnormality in injector magnetic valve driving circuit charge voltage
[Fault (outline)]
Charge rate excessive
[Diagnosis check]
- Injector magnetic valve driving circuit charge voltage in engine electronic control unit is monitored.

[Code generation condition]
- Charge voltage is judged excessive.
  (Warning lamp is lit and diagnosis code is displayed on first establishment of code generation condition.)

[Diagnosis check timing]
- When code generation condition is established after starter switch ON

[Diagnostic requirement]
- 2 seconds passed after starter switch ON
- Battery voltage: normal
- Sub-CPU: in order
- Charge circuit: active

[Control effected by electronic control unit during fault]
- Common rail system is stopped. (Engine is immediately stopped)
- Learning of FCCB (fuel control cylinder balance) is inhibited.

[Probable cause of trouble]
- Abnormality in electronic control unit (replacement of electronic control unit)

[Recoverability]
<Control during fault>
- Recovered if signal becomes normal when starter switch is turned OFF to ON (power supply resumed to electronic control unit).

<Warning lamp>
[Warning lamp: MIL (orange)]
- Extinguished at 4th driving cycle after normal signal is input.

[Warning lamp: red]
- Extinguished at next driving cycle after normal signal is input.

<Fault code>
[Warning lamp: MIL (orange)]
- Automatically cleared at 40th warm up cycle after warning lamp is extinguished.
  (To clear as desired, erase from the memory.)

[Warning lamp: red]
- Automatically cleared after warning lamp is extinguished.
  (To clear as desired, erase from the memory.)

Driving cycle : “Starter switch ON to start engine till starter switch OFF” constitutes 1 driving cycle.
Warm up cycle : “Starter switch ON to start engine till starter switch OFF after coolant temperature increased and engine warmed up” constitutes 1 warm up cycle.

[[Fault code]
Diagnosis code: P2170/Flash code: 93
[Monitor]
Abnormality of exhaust shutter 3-way magnetic valve 1
[Fault (outline)]
- Short circuit ground
- Open circuit

[Diagnosis check]
- Exhaust shutter 3-way magnetic valve 1 circuit is monitored for fault.

[Code generation condition]
- Exhaust shutter 3-way magnetic valve 1 circuit remains shorted to ground as detected for approx. 1 second. (Warning lamp is lit and diagnosis code is displayed on first establishment of code generation condition.)

[Diagnosis check timing]
- When code generation condition is established after starter switch ON

[Diagnostic requirement]
- 2 seconds passed after starter switch ON
- 2 seconds passed after cranking
- Battery voltage: normal
- Magnetic valve 1: inactive

[Control effected by electronic control unit during fault]
- Injection quantity is limited.
- Exhaust gas recirculation control is stopped.
- Throttle control is stopped.
- Diesel particulate filter regeneration (manual or automatic) is stopped.
- Auxiliary brake indicator lamp control is stopped.

[Probable cause of trouble]
- Short-circuit of harness between electronic control unit and exhaust shutter 3-way magnetic valve 1
- Abnormality of each connector
- Abnormality of exhaust shutter 3-way magnetic valve 1
- Abnormality in electronic control unit

[Recoverability]
<Control during fault>
- Recovered if signal becomes normal with starter switch in ON position.

<Warning lamp>
- Extinguished at 4th driving cycle after normal signal is input.

<Fault code>
- Automatically cleared at 40th warm up cycle after warning lamp is extinguished. (To clear as desired, erase from the memory.)

Driving cycle : “Starter switch ON to start engine till starter switch OFF” constitutes 1 driving cycle.
Warm up cycle : “Starter switch ON to start engine till starter switch OFF after coolant temperature increased and engine warmed up” constitutes 1 warm up cycle.

[Electronic Control Unit Connection Diagram]

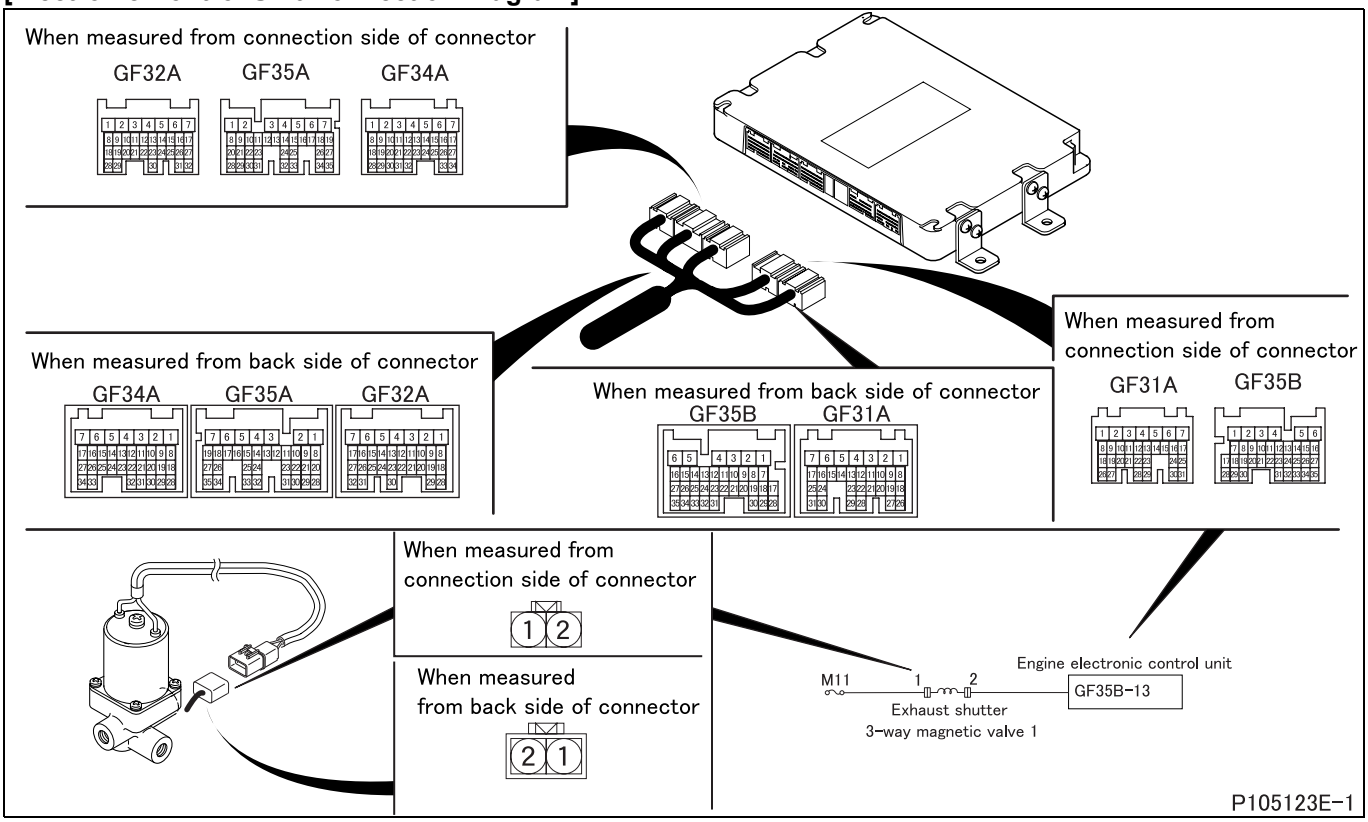

[Parts Identification and Location]

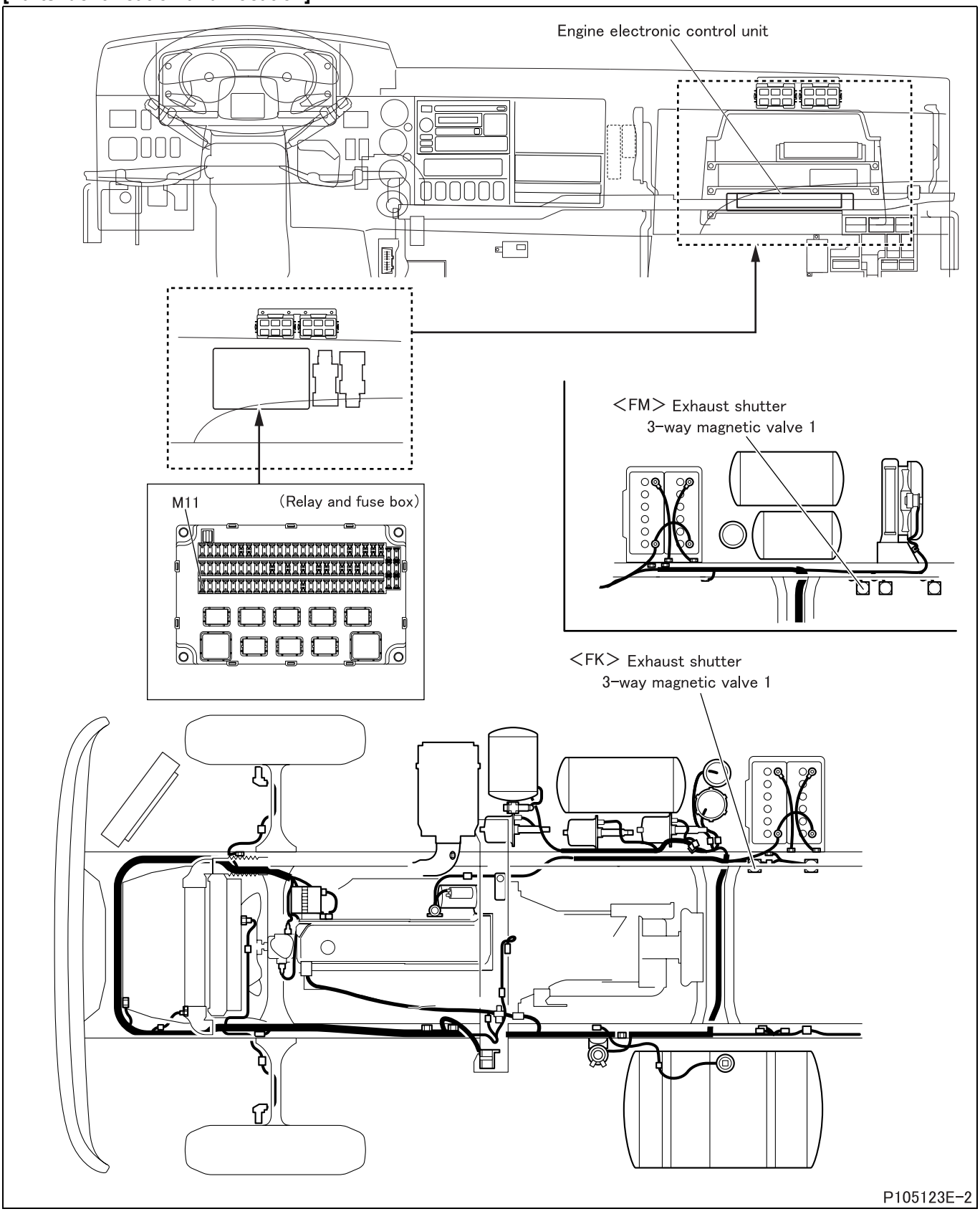

[Fault diagnosis]

- Perform checks in the sequence of the following steps.

Step 1	Inspection items		Inspection by control data
	Maintenance item		Perform actuator test item No. AC “Auxiliary Brake M/V 1”.
	Inspection condition		Starter switch: ON
	Requirements		3-way magnetic valve operation sound is noted (automatically reset after 6 seconds), or ON/OFF switching of Service Data: item No. 87 “Auxiliary Brake M/V 1” is effected
	Inspection result (Is the judging standard satisfied?)	YES	Go to transient fault (See Gr00.).
		NO	Go to step 2.

Step 2	Inspection items		Inspection of electronic control unit connector
	Maintenance item		Inspection of connector
	Inspection condition		–
	Requirements		• Connector is properly connected. • No trace of water entry is found. • No corrosion is found in terminal. • Connection to terminal is appropriate.
	Inspection result (Is the judging standard satisfied?)	YES	Go to step 3.
		NO	Modify connector.

Step 3	Inspection items		Inspection of 3-way magnetic valve connector
	Maintenance item		Inspection of connector
	Inspection condition		–
	Requirements		• Connector is properly connected. • No trace of water entry is found. • No corrosion is found in terminal. • Connection to terminal is appropriate.
	Inspection result (Is the judging standard satisfied?)	YES	Go to step 4.
		NO	Modify connector.

Step 4	Inspection items		Inspection of 3-way magnetic valve unit
	Maintenance item		Measure minimum operating voltage when 3-way magnetic valve operates (judge by operation sound).
	Inspection condition		Gradually increase from zero the voltage applied to terminals No. 1 (+) and 2 (–).
	Requirements		10 V or less
	Inspection result (Is the judging standard satisfied?)	YES	Go to step 5.
		NO	Replacement of 3-way magnetic valve

<Step 4 inspection diagram>

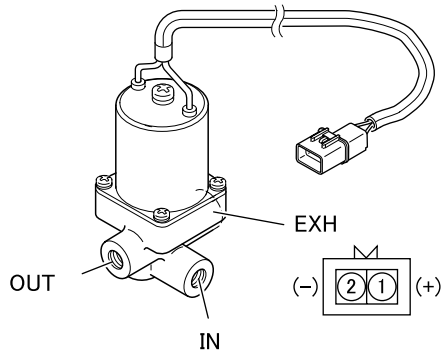

	IN	OUT	EXH
ON	○—○		
OFF		○—○	

○—○ Pneumatic continuity

P59151E

Step 5	Inspection items		Inspection of harness between 3-way magnetic valve and electronic control unit (ground)
	Maintenance item		Check circuit between 3-way magnetic valve connector terminal No. 2 and electronic control unit connector (GF35B) terminal No. 13.
	Inspection condition		Disconnect each device from harness and measure from connection side of harness connector.
	Requirements		There is continuity.
	Inspection result (Is the judging standard satisfied?)	YES	Go to step 6.
		NO	Modify harness.

Step 6	Inspection items		Inspection of harness between 3-way magnetic valve and fuse (power supply)
	Maintenance item		Check circuit between 3-way magnetic valve connector terminal No. 1 and fuse (M11).
	Inspection condition		Disconnect each device from harness and measure from connection side of harness connector.
	Requirements		There is no continuity.
	Inspection result (Is the judging standard satisfied?)	YES	Go to step 7.
		NO	Modify harness.

Step 7	Inspection items		Inspection by control data
	Maintenance item		Perform actuator test item No. AC “Auxiliary Brake M/V 1”.
	Inspection condition		Starter switch: ON
	Requirements		3-way magnetic valve operation sound is noted (automatically reset after 6 seconds), or ON/OFF switching of Service Data: item No. 87 “Auxiliary Brake M/V 1” is effected
	Inspection result (Is the judging standard satisfied?)	YES	Go to transient fault (See Gr00.).
		NO	Replacement of electronic control unit.

[Fault code]
Diagnosis code: P2171/Flash code: 93
[Monitor]
Failure of exhaust shutter 3-way magnetic valve 1
[Fault (outline)]
Short circuit battery
[Diagnosis check]
- Exhaust shutter 3-way magnetic valve 1 circuit is monitored for fault.

[Code generation condition]
- Exhaust shutter 3-way magnetic valve 1 circuit remains shorted to battery as detected for approx.1 second. (Warning lamp is lit and diagnosis code is displayed on first establishment of code generation condition.)

[Diagnosis check timing]
- When code generation condition is established after starter switch ON

[Diagnostic requirement]
- 2 seconds passed after starter switch ON
- 2 seconds passed after cranking
- Battery voltage: normal
- Magnetic valve 1: active

[Control effected by electronic control unit during fault]
- Injection quantity is limited.
- Exhaust gas recirculation control is stopped.
- Throttle control is stopped.
- Diesel particulate filter regeneration (manual or automatic) is stopped.
- Auxiliary brake control is stopped.
- Auxiliary brake indicator lamp control is stopped.

[Probable cause of trouble]
- Short-circuit of harness between electronic control unit and exhaust shutter 3-way magnetic valve 1
- Abnormality of each connector
- Abnormality of exhaust shutter 3-way magnetic valve 1
- Abnormality in electronic control unit

[Recoverability]
<Control during fault>
- Recovered if signal becomes normal with starter switch in ON position.

<Warning lamp>
- Extinguished at 4th driving cycle after normal signal is input.

<Fault code>
- Automatically cleared at 40th warm up cycle after warning lamp is extinguished. (To clear as desired, erase from the memory.)

Driving cycle : “Starter switch ON to start engine till starter switch OFF” constitutes 1 driving cycle.
Warm up cycle : “Starter switch ON to start engine till starter switch OFF after coolant temperature increased and engine warmed up” constitutes 1 warm up cycle.

[Electronic Control Unit Connection Diagram]

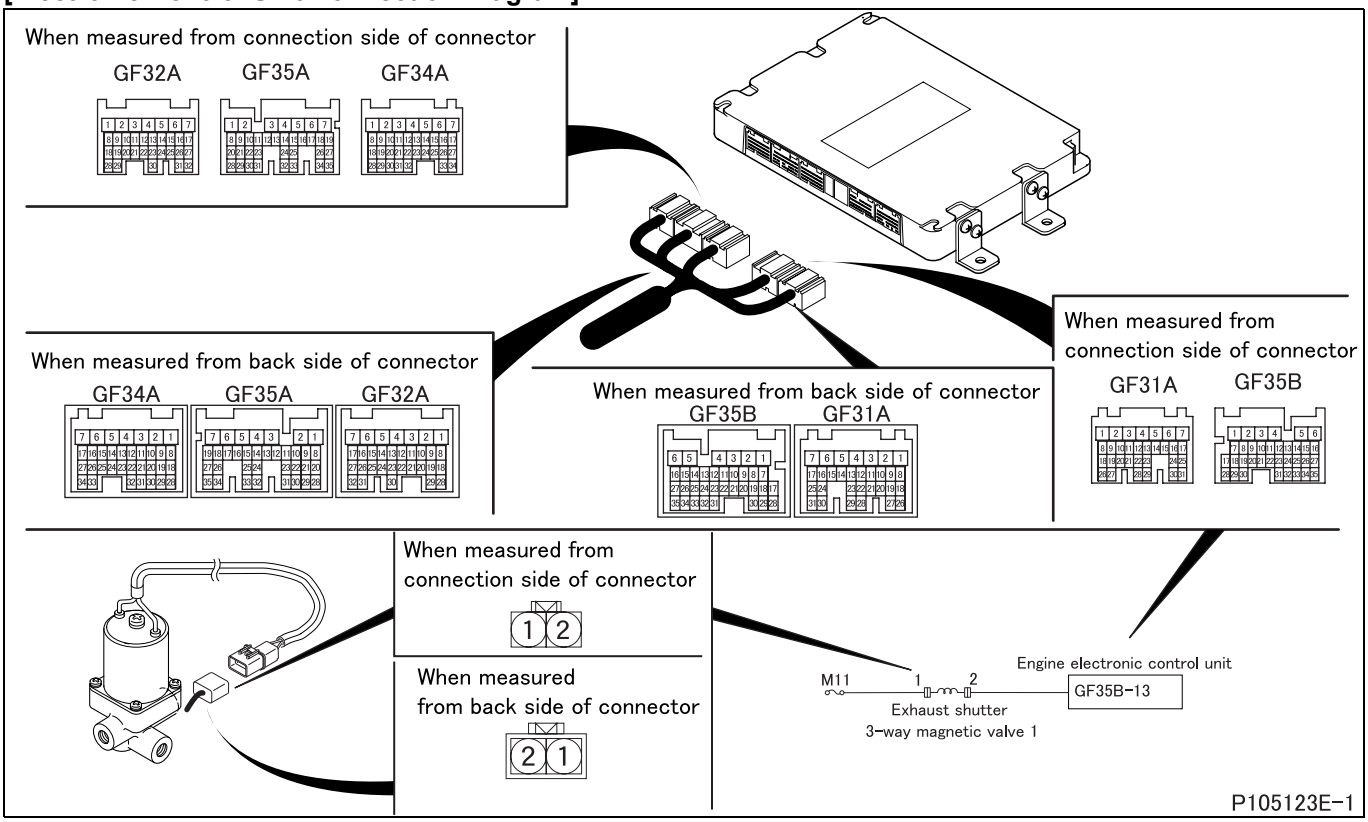

[Parts Identification and Location]

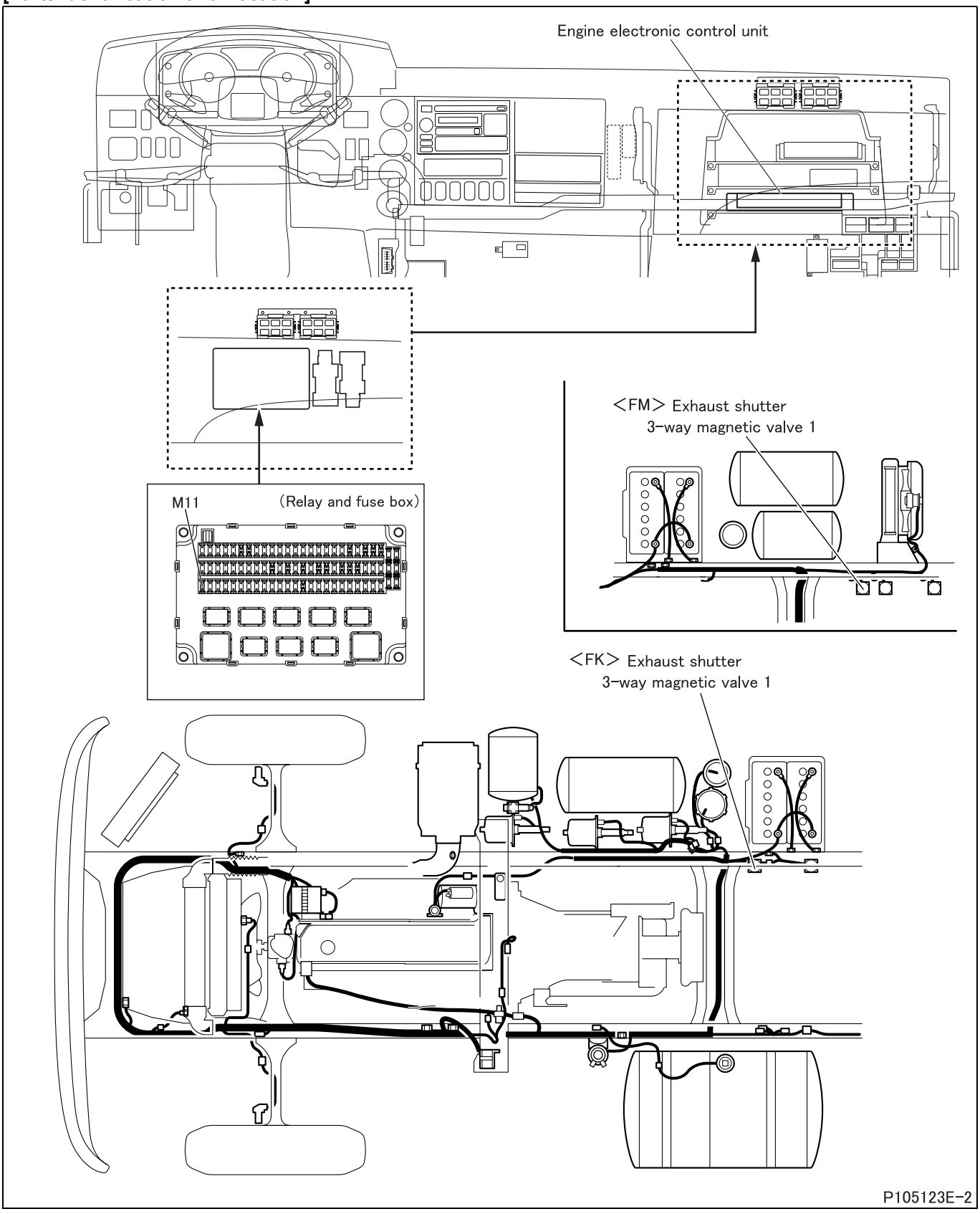

[Fault diagnosis]

- Perform checks in the sequence of the following steps.

Step 1	Inspection items		Inspection by control data
	Maintenance item		Perform actuator test item No. AC “Auxiliary Brake M/V 1”.
	Inspection condition		Starter switch: ON
	Requirements		3-way magnetic valve operation sound is noted (automatically reset after 6 seconds), or ON/OFF switching of Service Data: item No. 87 “Auxiliary Brake M/V 1” is effected
	Inspection result (Is the judging standard satisfied?)	YES	Go to transient fault (See Gr00.).
		NO	Go to step 2.

Step 2	Inspection items		Inspection of electronic control unit connector
	Maintenance item		Inspection of connector
	Inspection condition		–
	Requirements		• Connector is properly connected. • No trace of water entry is found. • No corrosion is found in terminal. • Connection to terminal is appropriate.
	Inspection result (Is the judging standard satisfied?)	YES	Go to step 3.
		NO	Modify connector.

Step 3	Inspection items		Inspection of 3-way magnetic valve connector
	Maintenance item		Inspection of connector
	Inspection condition		–
	Requirements		• Connector is properly connected. • No trace of water entry is found. • No corrosion is found in terminal. • Connection to terminal is appropriate.
	Inspection result (Is the judging standard satisfied?)	YES	Go to step 4.
		NO	Modify connector.

Step 4	Inspection items		Inspection of 3-way magnetic valve unit
	Maintenance item		Measure minimum operating voltage when 3-way magnetic valve operates (judge by operation sound).
	Inspection condition		Gradually increase from zero the voltage applied to terminals No. 1 (+) and 2 (–).
	Requirements		10 V or less
	Inspection result (Is the judging standard satisfied?)	YES	Go to step 5.
		NO	Replacement of 3-way magnetic valve

<Step 4 inspection diagram>

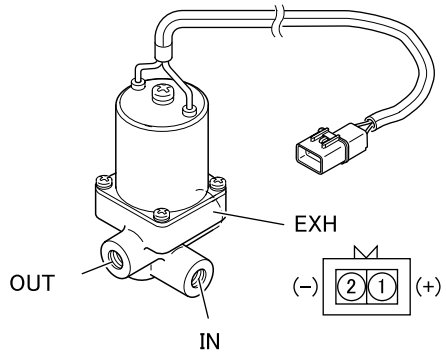

	IN	OUT	EXH
ON	○—○		
OFF		○—○	

○—○ Pneumatic continuity

P59151E

Step 5	Inspection items		Inspection of harness between 3-way magnetic valve and electronic control unit (ground)
	Maintenance item		Check circuit between 3-way magnetic valve connector terminal No. 2 and electronic control unit connector (GF35B) terminal No. 13.
	Inspection condition		Disconnect each device from harness and measure from connection side of harness connector.
	Requirements		There is continuity.
	Inspection result (Is the judging standard satisfied?)	YES	Go to step 6.
		NO	Modify harness.

Step 6	Inspection items		Inspection of harness between 3-way magnetic valve and fuse (power supply)
	Maintenance item		Check circuit between 3-way magnetic valve connector terminal No. 1 and fuse (M11).
	Inspection condition		Disconnect each device from harness and measure from connection side of harness connector.
	Requirements		There is no continuity.
	Inspection result (Is the judging standard satisfied?)	YES	Go to step 7.
		NO	Modify harness.

Step 7	Inspection items		Inspection by control data
	Maintenance item		Perform actuator test item No. AC “Auxiliary Brake M/V 1”.
	Inspection condition		Starter switch: ON
	Requirements		3-way magnetic valve operation sound is noted (automatically reset after 6 seconds), or ON/OFF switching of Service Data: item No. 87 “Auxiliary Brake M/V 1” is effected
	Inspection result (Is the judging standard satisfied?)	YES	Go to transient fault (See Gr00.).
		NO	Replacement of electronic control unit.

[Fault code]
Diagnosis code: P2199/Flash code: 09
[Monitor]
Characteristic abnormality of intake air temperature sensor 2
[Fault (outline)]
Gain and offset drift
[Diagnosis check]
Exhaust gas recirculation gas temperature derived from output data of intake air temperature sensor 1 is compared to exhaust gas recirculation gas temperature actually measured by intake air temperature sensor 2 to determine whether it is within the specified range.
[Code generation condition]
- Operation is continued for approx. 5 seconds with actual measurement of exhaust gas recirculation gas temperature out of specification.
  (Warning lamp is lit and diagnosis code is displayed on second establishment of code generation condition.)

[Diagnosis check timing]
- When code generation condition is established after starter switch ON

[Diagnostic requirement]
- Preoperation time of engine: more than 300 seconds
- Intake throttle: open
- Atmospheric pressure sensor: normal in output signal
- Intake air temperature sensor 2: normal in output signal
- Intake air temperature sensor 1: normal in output signal
- Check of intake air temperature sensor 1: normal
- Air flow sensor: normal in output signal
- Intake throttle: normal in output signal
- 2 seconds passed after starter switch ON
- 2 seconds passed after cranking
- Battery voltage: normal
- Sensor power supply voltage: normal
- Boost pressure sensor: normal

[Control effected by electronic control unit during fault]
- Effects no special control.

[Probable cause of trouble]
- Open-circuit or short-circuit of harness between electronic control unit and intake air temperature sensor 2
- Abnormality of each connector
- Abnormality of intake air temperature sensor 2
- Abnormality in electronic control unit

[Recoverability]
<Control during fault>
- Recovered if signal becomes normal with starter switch in ON position.

<Warning lamp>
- Extinguished at 4th driving cycle after normal signal is input.

<Fault code>
- Automatically cleared at 40th warm up cycle after warning lamp is extinguished.
  (To clear as desired, erase from the memory.)

Driving cycle : “Starter switch ON to start engine till starter switch OFF” constitutes 1 driving cycle.
Warm up cycle : “Starter switch ON to start engine till starter switch OFF after coolant temperature increased and engine warmed up” constitutes 1 warm up cycle.

[Electronic Control Unit Connection Diagram]

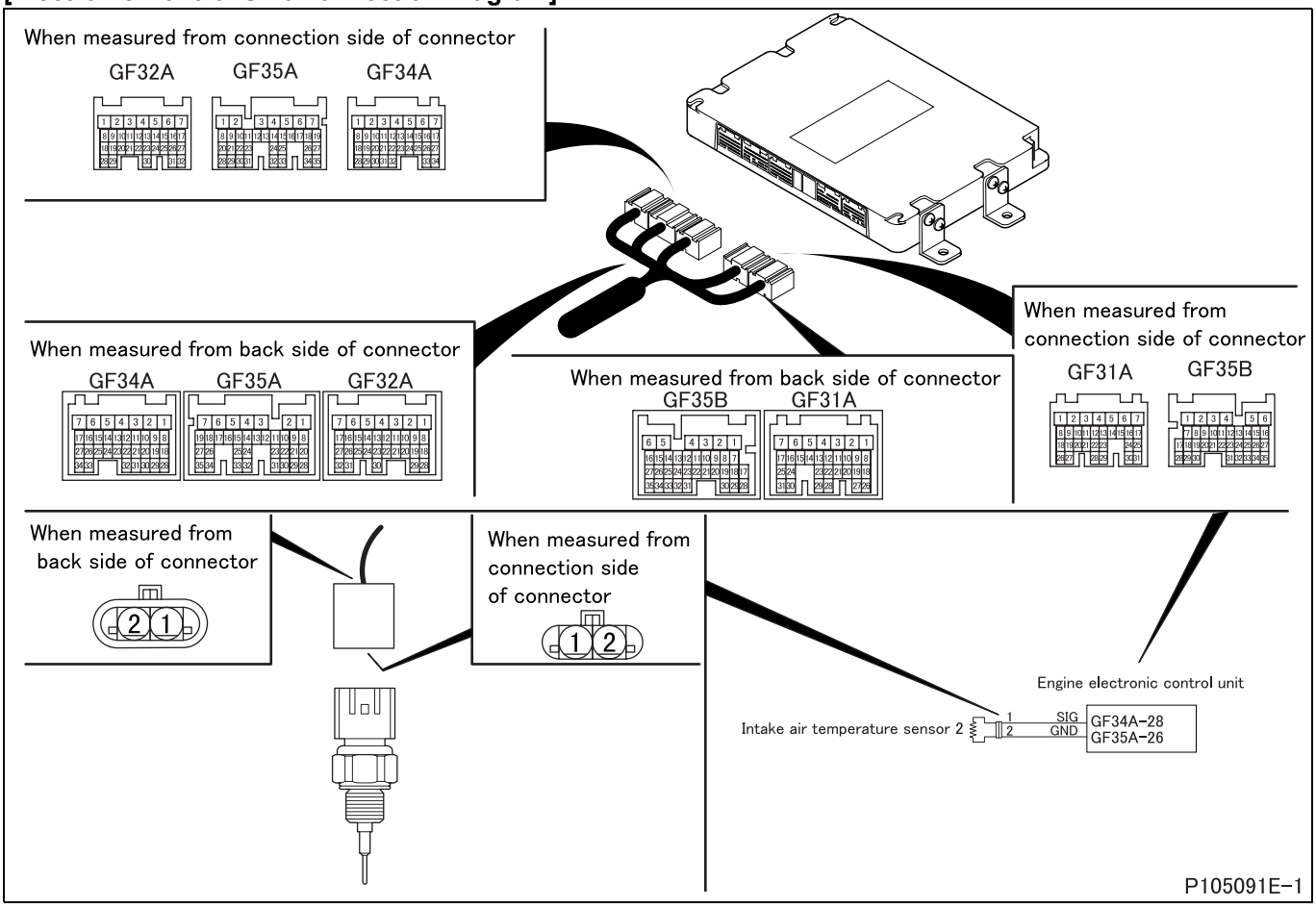

[Parts Identification and Location]

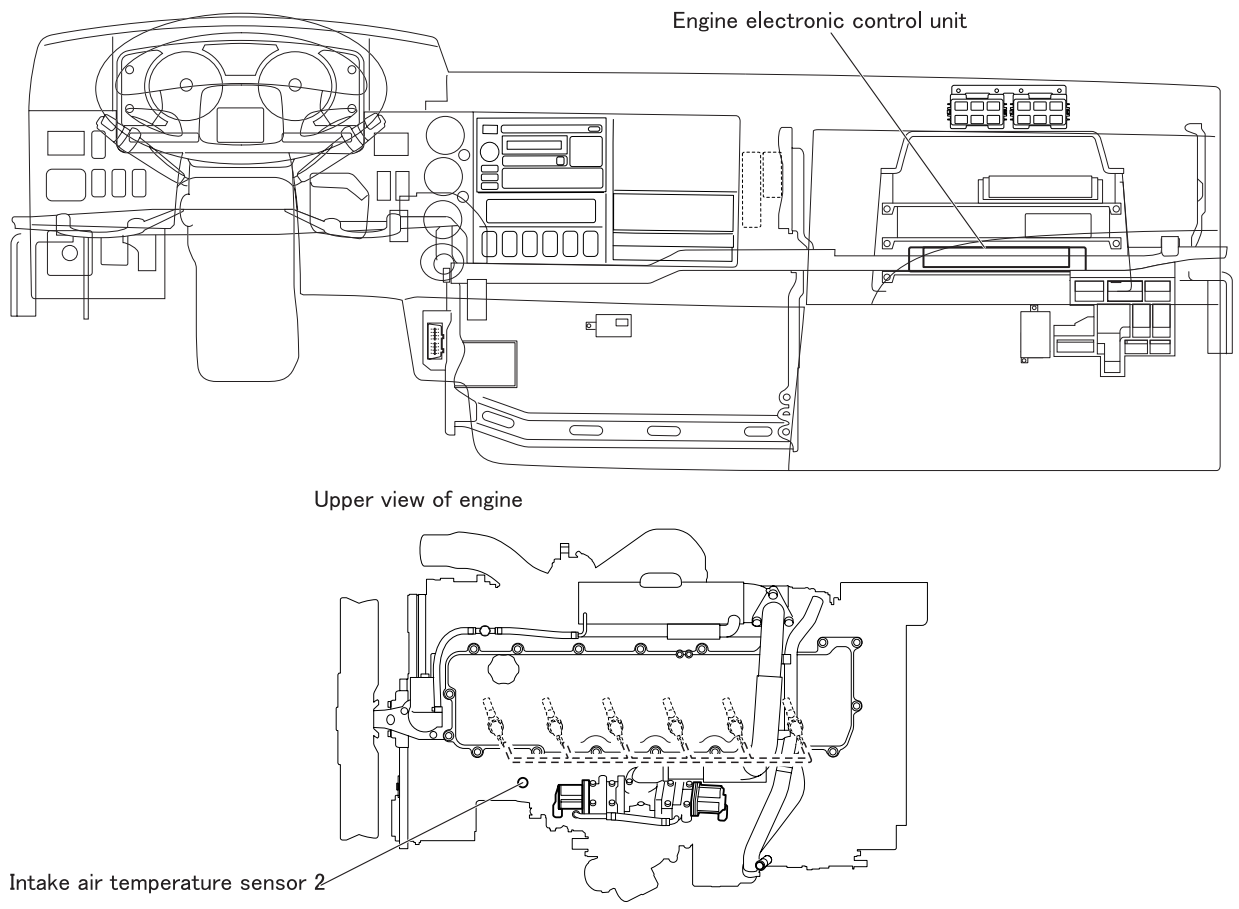

P105091E-2

[Fault diagnosis]

- Perform checks in the sequence of the following steps.

Step 1	Inspection items		Inspection by control data
	Maintenance item		**<General Scanning Tool used>** • Measure item “Intake Air Temperature”. **<Multi-Use Tester used>** • Measure item No. 28 “Intake Air Temperature (EGR)” of Service Data.
	Inspection condition		–
	Requirements		Cold engine: Proportionate to outside air temperature
	Inspection result (Is the judging standard satisfied?)	YES	Go to transient fault (See Gr00.).
		NO	Go to step 2.

Step 2	Inspection items		Inspection by electronic control unit connector
	Maintenance item		Measure value of resistance between connector (GF34A) terminal No. 26 and 28.
	Inspection condition		Disconnect electronic control unit from harness and measure from connection side of harness connector.
	Requirements		• 0°C {32°F}: 162.3 $^{+48.8}_{-36.5}$ kΩ • 20°C {68°F}: 61.47 $^{+15.99}_{-12.35}$ kΩ • 80°C {176°F}: 6.120 $^{+1.095}_{-0.907}$ kΩ
	Inspection result (Is the judging standard satisfied?)	YES	Go to step 3.
		NO	Go to step 4.

Step 3	Inspection items		Inspection of electronic control unit connector
	Maintenance item		Inspection of connector
	Inspection condition		–
	Requirements		• Connector is properly connected. • No trace of water entry is found. • No corrosion is found in terminal. • Connection to terminal is appropriate.
	Inspection result (Is the judging standard satisfied?)	YES	Go to step 8.
		NO	Modify connector.

Step 4	Inspection items		Inspection of intake air temperature sensor 2 connector
	Maintenance item		Inspection of connector
	Inspection condition		–
	Requirements		• Connector is properly connected. • No trace of water entry is found. • No corrosion is found in terminal. • Connection to terminal is appropriate.
	Inspection result (Is the judging standard satisfied?)	YES	Go to step 5.
		NO	Modify connector.

Step 5	Inspection items		Inspection of intake air temperature sensor 2 unit
	Maintenance item		Measure value of resistance between connector terminal No. 1 and No. 2.
	Inspection condition		• Put intake air temperature sensor 2 in vessel filled with engine oil. • Heat the oil to each of the specified temperatures. Stir the oil well while doing so.
	Requirements		• 0°C {32°F}: 162.3 $^{+48.8}_{-36.5}$ kΩ • 20°C {68°F}: 61.47 $^{+15.99}_{-12.35}$ kΩ • 80°C {176°F}: 6.120 $^{+1.095}_{-0.907}$ kΩ
	Inspection result (Is the judging standard satisfied?)	YES	Go to step 6.
		NO	Replacement of sensor

<Step 5 inspection diagram>

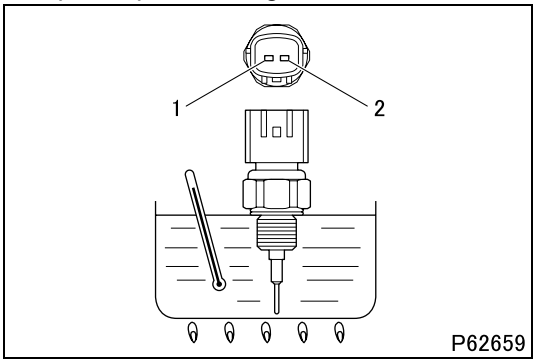

Step 6	Inspection items		Inspection of harness between electronic control unit and sensor (power supply)
	Maintenance item		Check circuit between sensor connector terminal No. 1 and electronic control unit connector (GF34A) terminal No. 28.
	Inspection condition		Disconnect each device from harness and measure from connection side of harness connector.
	Requirements		There is continuity.
	Inspection result (Is the judging standard satisfied?)	YES	Go to step 7.
		NO	Modify harness.

Step 7	Inspection items		Inspection of harness between electronic control unit and sensor (ground)
	Maintenance item		Check circuit between sensor connector terminal No. 2 and electronic control unit connector (GF35A) terminal No. 26.
	Inspection condition		Disconnect each device from harness and measure from connection side of harness connector.
	Requirements		There is continuity.
	Inspection result (Is the judging standard satisfied?)	YES	Go to step 8.
		NO	Modify harness.

Step 8	Inspection items		Inspection by control data
	Maintenance item		**<General Scanning Tool used>** • Measure item “Intake Air Temperature”. **<Multi-Use Tester used>** • Measure item No. 28 “Intake Air Temperature (EGR)” of Service Data.
	Inspection condition		–
	Requirements		Cold engine: Proportionate to outside air temperature
	Inspection result (Is the judging standard satisfied?)	YES	Go to transient fault (See Gr00.).
		NO	Replacement of electronic control unit

[Fault code]
Diagnosis code: P2228/Flash code: 19
[Monitor]
Abnormality of atmospheric pressure sensor (built into engine electronic control unit)
[Fault (outline)]
Low signal range check
[Diagnosis check]
- Output voltage of atmospheric pressure sensor (built in engine electronic control unit) is monitored.

[Code generation condition]
- Voltage of atmospheric pressure sensor remains under 1.9 V for approx. 2.5 seconds.
  (Warning lamp is lit and diagnosis code is displayed on first establishment of code generation condition.)

[Diagnosis check timing]
- When code generation condition is established after starter switch ON

[Diagnostic requirement]
- 2 seconds passed after starter switch ON
- 2 seconds passed after cranking
- Battery voltage: normal

[Control effected by electronic control unit during fault]
- Injection quantity is limited.
- Exhaust gas recirculation control is stopped.
- Throttle control is stopped.
- Diesel particulate filter regeneration (manual or automatic) is stopped.
- Control is carried out using backup value (101 kPa).

[Probable cause of trouble]
- Abnormality of atmospheric pressure sensor (built into engine electronic control unit)

[Recoverability]
<Control during fault>
- Recovered if signal becomes normal with starter switch in ON position.

<Warning lamp>
- Extinguished at 4th driving cycle after normal signal is input.

<Fault code>
- Automatically cleared at 40th warm up cycle after warning lamp is extinguished.
  (To clear as desired, erase from the memory.)

Driving cycle : “Starter switch ON to start engine till starter switch OFF” constitutes 1 driving cycle.
Warm up cycle : “Starter switch ON to start engine till starter switch OFF after coolant temperature increased and engine warmed up” constitutes 1 warm up cycle.

[Fault diagnosis]
- Perform checks in the sequence of the following step.

Step 1	Inspection items		Inspection by control data
	Maintenance item		**<General Scanning Tool used>** • Measure item “Barometric Pressure”. **<Multi-Use Tester used>** • Measure item No. 38 “Atmospheric Pressure” of Service Data.
	Inspection condition		–
	Requirements		Standard atmospheric pressure (around 101.3 kPa {15 psi, 1.0 kgf/cm^2})
	Inspection result (Is the judging standard satisfied?)	YES	Go to transient fault (See Gr00.).
		NO	Replacement of electronic control unit

[Fault code]
Diagnosis code: P2229/Flash code: 19
[Monitor]
Abnormality of atmospheric pressure sensor (built into engine electronic control unit)
[Fault (outline)]
High signal range check
[Diagnosis check]
- Output voltage of atmospheric pressure sensor (built in engine electronic control unit) is monitored.

[Code generation condition]
- Voltage of atmospheric pressure sensor remains over 4.7 V for approx. 2.5 seconds.
  (Warning lamp is lit and diagnosis code is displayed on first establishment of code generation condition.)

[Diagnosis check timing]
- When code generation condition is established after starter switch ON

[Diagnostic requirement]
- 2 seconds passed after starter switch ON
- 2 seconds passed after cranking
- Battery voltage: normal

[Control effected by electronic control unit during fault]
- Injection quantity is limited.
- Exhaust gas recirculation control is stopped.
- Throttle control is stopped.
- Diesel particulate filter regeneration (manual or automatic) is stopped.
- Control is carried out using backup value (101 kPa).

[Probable cause of trouble]
- Abnormality of atmospheric pressure sensor (built into engine electronic control unit)

[Recoverability]
<Control during fault>
- Recovered if signal becomes normal with starter switch in ON position.

<Warning lamp>
- Extinguished at 4th driving cycle after normal signal is input.

<Fault code>
- Automatically cleared at 40th warm up cycle after warning lamp is extinguished.
  (To clear as desired, erase from the memory.)

Driving cycle : “Starter switch ON to start engine till starter switch OFF” constitutes 1 driving cycle.
Warm up cycle : “Starter switch ON to start engine till starter switch OFF after coolant temperature increased and engine warmed up” constitutes 1 warm up cycle.

[Fault diagnosis]
- Perform checks in the sequence of the following step.

Step 1	Inspection items		Inspection by control data
	Maintenance item		**<General Scanning Tool used>** • Measure item “Barometric Pressure”. **<Multi-Use Tester used>** • Measure item No. 38 “Atmospheric Pressure” of Service Data.
	Inspection condition		–
	Requirements		Standard atmospheric pressure (around 101.3 kPa {15 psi, 1.0 kgf/cm^2})
	Inspection result (Is the judging standard satisfied?)	YES	Go to transient fault (See Gr00.).
		NO	Replacement of electronic control unit

[Fault code]
Diagnosis code: P2413/Flash code: 95
[Monitor]
Abnormality in exhaust gas recirculation valve (target abnormality)
[Fault (outline)]
Target out of range
[Diagnosis check]
- In this code exhaust gas recirculation electronic drive unit detects exhaust gas recirculation valve position as actual position through position sensor and compares it with target position for control by engine electronic control unit.

[Code generation condition]
- Operation remains for 1 second after exhaust gas recirculation electronic drive unit judged that valve was not positioned within target range.
- Exhaust gas recirculation valve remains out of target position as detected by exhaust gas recirculation electronic drive unit for approx. 6 seconds.
  (Warning lamp is lit and diagnosis code is displayed on first establishment of code generation condition.)

[Diagnosis check timing]
- When code generation condition is established after starter switch ON

[Diagnostic requirement]
- 2 seconds passed after starter switch ON
- 2 seconds passed after cranking
- Battery voltage: normal

[Control effected by electronic control unit during fault]
- Injection quantity is limited.
- Exhaust gas recirculation control is stopped.
- Throttle control is stopped.
- Diesel particulate filter regeneration (manual or automatic) is stopped.

[Probable cause of trouble]
- Open-circuit or short-circuit of harness between exhaust gas recirculation electronic drive unit and exhaust gas recirculation valve
- Abnormality of each connector
- Abnormality of exhaust gas recirculation motor (built in exhaust gas recirculation valve)
- Abnormality of exhaust gas recirculation position sensor (built in exhaust gas recirculation valve)
- Abnormality of exhaust gas recirculation electronic drive unit
- Abnormality of electronic drive unit relay

[Recoverability]
<Control during fault>
- Recovered if signal becomes normal with starter switch in ON position.

<Warning lamp>
- Extinguished at 4th driving cycle after normal signal is input.

<Fault code>
- Automatically cleared at 40th warm up cycle after warning lamp is extinguished.
  (To clear as desired, erase from the memory.)

Driving cycle : “Starter switch ON to start engine till starter switch OFF” constitutes 1 driving cycle.
Warm up cycle : “Starter switch ON to start engine till starter switch OFF after coolant temperature increased and engine warmed up” constitutes 1 warm up cycle.

[Electronic Control Unit Connection Diagram]

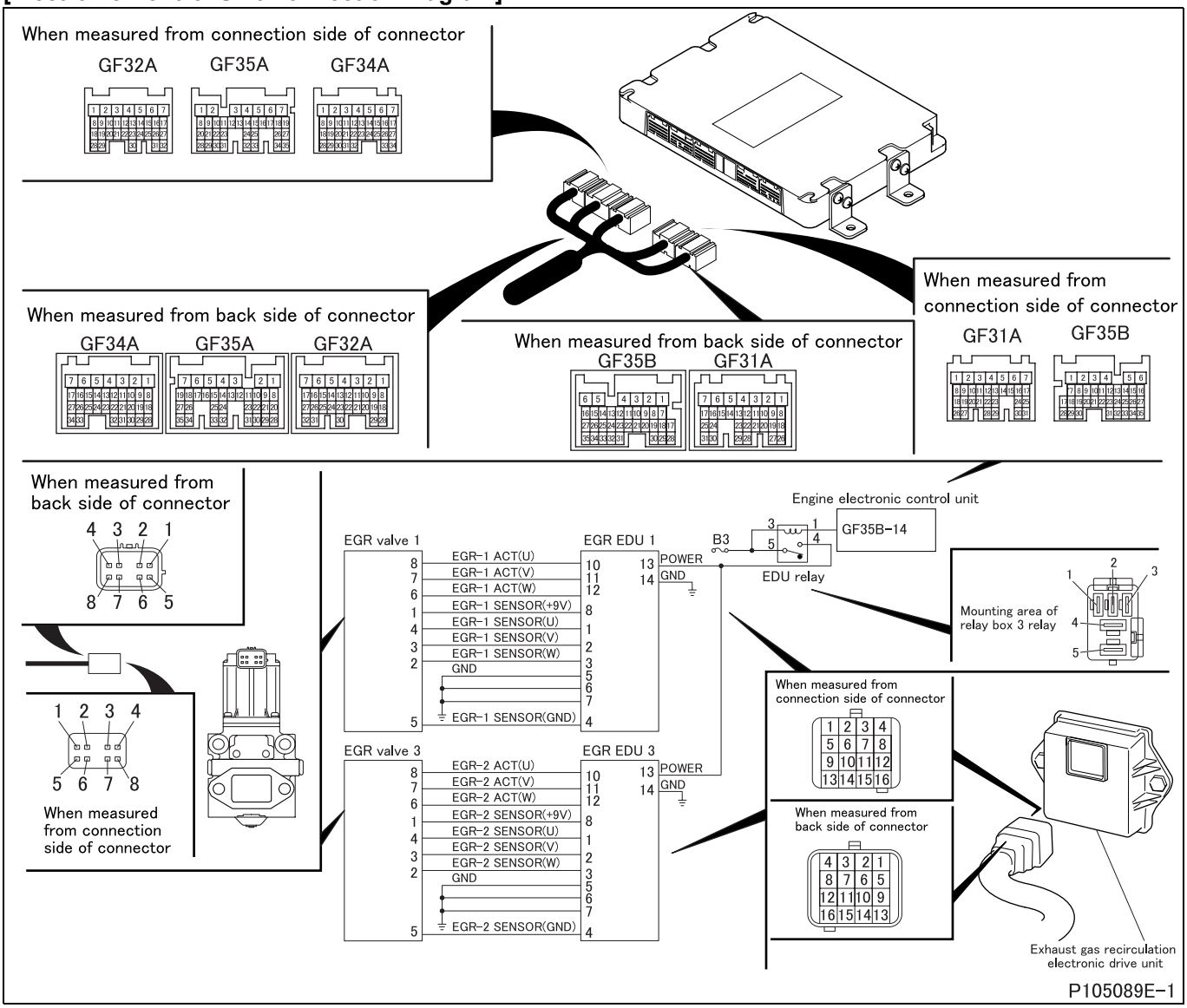

[Parts Identification and Location]

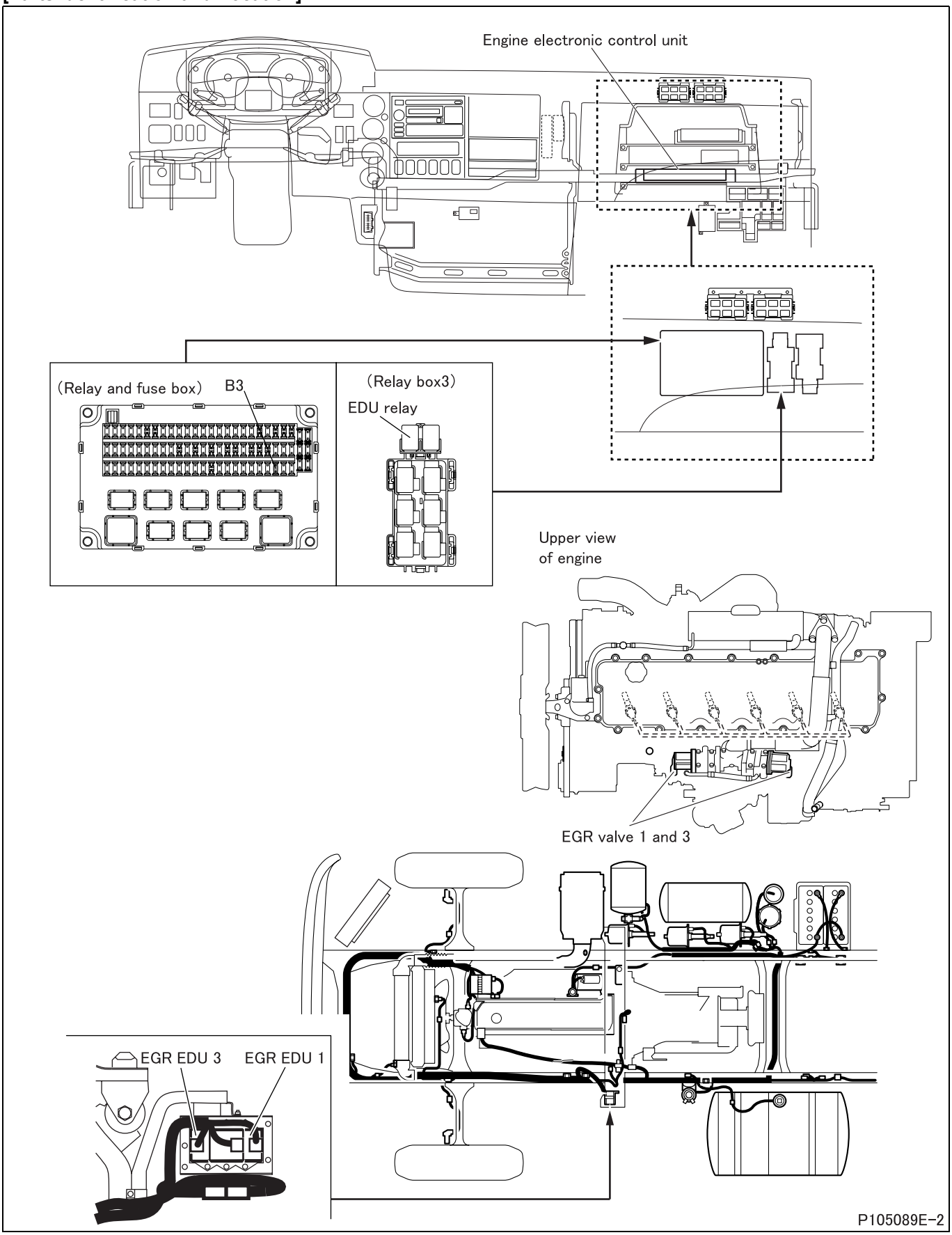

[Fault diagnosis]

- Perform checks in the sequence of the following steps.

Step 1	Inspection items		Inspection by control data
	Maintenance item		Perform actuator test item No. A1 “EGR1, 3”. **NOTE** • **As initial operational check of exhaust gas recirculation valve is automatically effected immediately after starter switch is ON, perform actuator test by Multi-Use Tester after that check (approximately 5 seconds later).**
	Inspection condition		• Vehicle: stationary (vehicle speed 0 km/h {0 MPH}) • Starter switch: ON (engine started) • Transmission: neutral (parking satisfactory for automatic transmission)
	Requirements		Actual position matches with target value set by Multi-Use Tester (check with service data “0E: EGR1 Actual Position”, “0F: EGR3 Actual Position”).
	Inspection result (Is the judging standard satisfied?)	YES	Go to transient fault (See Gr00.).
		NO	Go to step 2.

Step 2	Inspection items		Inspection of electronic drive unit connector
	Maintenance item		Inspection of connector
	Inspection condition		–
	Requirements		• Connector is properly connected. • No trace of water entry is found. • No corrosion is found in terminal. • Connection to terminal is appropriate.
	Inspection result (Is the judging standard satisfied?)	YES	Go to step 3.
		NO	Modify connector.

Step 3	Inspection items		Inspection of exhaust gas recirculation valve connector
	Maintenance item		Inspection of connector
	Inspection condition		–
	Requirements		• Connector is properly connected. • No trace of water entry is found. • No corrosion is found in terminal. • Connection to terminal is appropriate.
	Inspection result (Is the judging standard satisfied?)	YES	Go to step 4.
		NO	Modify connector.

Step 4	Inspection items		Inspection by control data
	Maintenance item		Check if following diagnosis codes occur simultaneously. • P0685 “EDU Relay (Open)” • P0686 “EDU Relay (Low)” • P0687 “EDU Relay (High)” • P0688 “EDU Relay (Over Load)”
	Inspection condition		Starter switch: ON
	Requirements		No codes occur.
	Inspection result (Is the judging standard satisfied?)	YES	Go to step 5.
		NO	Inspect diagnosis code that is occurring.

Step 5	Inspection items		Inspection of electronic drive unit connector (power supply)
	Maintenance item		Measure value of voltage between connector terminal No. 13 (+) and 14 (–).
	Inspection condition		• Disconnect connector and measure from harness side. • Starter switch: ON • Perform actuator test item No. A9 “EDU Relay”.
	Requirements		Same as battery voltage.
	Inspection result (Is the judging standard satisfied?)	YES	Go to step 10.
		NO	Go to step 6.

Step 6	Inspection items		Inspection of relay connector
	Maintenance item		Inspection of connector
	Inspection condition		–
	Requirements		• Connector is properly connected. • No trace of water entry is found. • No corrosion is found in terminal. • Connection to terminal is appropriate.
	Inspection result (Is the judging standard satisfied?)	YES	Go to step 7.
		NO	Modify connector.

Step 7	Inspection items		Inspection of harness between fuse and relay
	Maintenance item		Check circuit between fuse No. B3 and relay connector terminal No. 5.
	Inspection condition		Disconnect each device from harness and measure from connection side of harness connector.
	Requirements		There is continuity.
	Inspection result (Is the judging standard satisfied?)	YES	Go to step 8.
		NO	Modify harness.

Step 8	Inspection items		Inspection of harness between relay and electronic drive unit
	Maintenance item		Check circuit between relay connector terminal No. 4 and electronic drive unit connector terminal No. 13.
	Inspection condition		Disconnect each device from harness and measure from connection side of harness connector.
	Requirements		There is continuity.
	Inspection result (Is the judging standard satisfied?)	YES	After replacement of electronic drive unit relay, go to step 9.
		NO	Modify harness.

Step 9	Inspection items		Inspection of harness between electronic drive unit and ground
	Maintenance item		Check circuit between following electronic drive unit connector terminals. • Electronic drive unit ground: terminal No. 14 - chassis ground • Sensor shield ground (U): terminal No. 5 - 14 • Sensor shield ground (V): terminal No. 6 - 14 • Sensor shield ground (W): terminal No. 7 - 14 • Sensor ground: terminal No. 4 - 14
	Inspection condition		Disconnect each device from harness and measure from connection side of harness connector.
	Requirements		There is continuity.
	Inspection result (Is the judging standard satisfied?)	YES	Go to step 10.
		NO	Modify harness.

Step 10	Inspection items		Inspection of electronic drive unit connector (motor)
	Maintenance item		Measure value of resistance between following connector terminals • Between U - V: 10 - 11 • Between U - W: 10 - 12 • Between V - W: 11 - 12
	Inspection condition		–
	Requirements		2.1 ± 0.3 Ω
	Inspection result (Is the judging standard satisfied?)	YES	Go to step 13.
		NO	Go to step 11.

Step 11	Inspection items		Inspection of harness between electronic drive unit and exhaust gas recirculation valve (motor)
	Maintenance item		Check circuit between following connector terminals. • Motor (U): electronic drive unit connector terminal No. 10 - exhaust gas recirculation valve connector terminal No. 8 • Motor (V): electronic drive unit connector terminal No. 11 - exhaust gas recirculation valve connector terminal No. 7 • Motor (W): electronic drive unit connector terminal No. 12 - exhaust gas recirculation valve connector terminal No. 6
	Inspection condition		Disconnect each device from harness and measure from connection side of harness connector.
	Requirements		There is continuity.
	Inspection result (Is the judging standard satisfied?)	YES	Go to step 12.
		NO	Modify harness.

Step 12	Inspection items		Inspection of exhaust gas recirculation valve unit (motor)
	Maintenance item		Measure value of resistance between following exhaust gas recirculation valve connector terminals • Between U - V: 8 - 7 • Between U - W: 8 - 6 • Between V - W: 7 - 6
	Inspection condition		• Keep exhaust gas recirculation valve installed on vehicle. • Remove harness connector and measure exhaust gas recirculation valve side.
	Requirements		2.1 ± 0.3 Ω
	Inspection result (Is the judging standard satisfied?)	YES	Go to step 13.
		NO	Replacement of exhaust gas recirculation valve

<Step 12 inspection diagram>

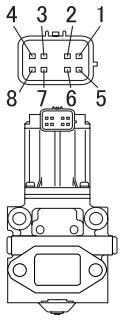

P104214

Step 13	Inspection items		Inspection of exhaust gas recirculation valve connector (position sensor: power supply)
	Maintenance item		Measure value of voltage between connector terminal No. 1 (+) and 5 (–).
	Inspection condition		• Measure from back side of harness connector with each device connected to harness. • Starter switch: ON
	Requirements		10 V
	Inspection result (Is the judging standard satisfied?)	YES	Go to step 14.
		NO	Go to step 15.

Step 14	Inspection items		Inspection of electronic drive unit connector (position sensor: signal)
	Maintenance item		Measure values of voltage between the following electronic drive unit connector terminals. • U signal output: terminal 1 (+) - 4 (–) • V signal output: terminal 2 (+) - 4 (–) • W signal output: terminal 3 (+) - 4 (–)
	Inspection condition		• Measure from back side of harness connector with each device connected to harness. • Starter switch: ON • Perform actuator test item No. A1 “EGR 1, 3”.
	Requirements		8 to 11 V
	Inspection result (Is the judging standard satisfied?)	YES	Go to step 16.
		NO	Go to step 15.

Step 15	Inspection items		Inspection of harness between electronic drive unit and exhaust gas recirculation valve (position sensor)
	Maintenance item		Check circuit between following connector terminals. • Sensor (power supply): electronic drive unit connector terminal No. 8 - exhaust gas recirculation valve connector terminal No. 1 • Sensor (U): electronic drive unit connector terminal No. 1 - exhaust gas recirculation valve connector terminal No. 4 • Sensor (V): electronic drive unit connector terminal No. 2 - exhaust gas recirculation valve connector terminal No. 3 • Sensor (W): electronic drive unit connector terminal No. 3 - exhaust gas recirculation valve connector terminal No. 2 • Sensor (ground): electronic drive unit connector terminal No. 4 - exhaust gas recirculation valve connector terminal No. 5
	Inspection condition		Disconnect each device from harness and measure from connection side of harness connector.
	Requirements		There is continuity.
	Inspection result (Is the judging standard satisfied?)	YES	After replacement of exhaust gas recirculation, go to step 16.
		NO	Modify harness.

Step 16	Inspection items		Inspection by control data
	Maintenance item		Perform actuator test item No. A1 “EGR1, 3”. **NOTE** • **As initial operational check of exhaust gas recirculation valve is automatically effected immediately after starter switch is ON, perform actuator test by Multi-Use Tester after that check (approximately 5 seconds later).**
	Inspection condition		• Vehicle: stationary (vehicle speed 0 km/h {0 MPH}) • Starter switch: ON (engine started) • Transmission: neutral • Diagnosis switch: OFF (fuse removed)
	Requirements		Actual position matches with target value set by Multi-Use Tester (check with service data “0E: EGR1 Actual Position”, “0F: EGR3 Actual Position”).
	Inspection result (Is the judging standard satisfied?)	YES	Go to transient fault (See Gr00.).
		NO	Replacement of electronic drive unit

[Fault code]
Diagnosis code: P2453/Flash code: 97
[Monitor]
Characteristic abnormality of DPF pressure sensor (DIFF)
[Fault (outline)]
Gain and offset drift
[Diagnosis check]
- Filter differential pressure detected by DPF pressure sensor (DIFF) is compared with filter differential pressure calculated by engine electronic control unit for deviation within specified limits.

[Code generation condition]
- Actual filter differential pressure remains over specified value for approx. 5 seconds.
  (Warning lamp is lit and diagnosis code is displayed on second establishment of code generation condition.)

[Diagnosis check timing]
- When code generation condition is established after starter switch ON

[Diagnostic requirement]
- Air flow sensor: normal in output signal
- DPF temperature sensor 1: normal in output signal
- 2 seconds passed after starter switch ON
- 2 seconds passed after cranking
- Battery voltage: normal
- DPF absolute pressure sensor: in order
- DPF pressure sensor (DIFF): in order
- Atmospheric pressure sensor: in order

[Control effected by electronic control unit during fault]
- Effects no special control.

[Probable cause of trouble]
- Open-circuit or short-circuit of harness between electronic control unit and DPF pressure sensor (DIFF)
- Abnormality of each connector
- Abnormality of DPF pressure sensor (DIFF)
- Abnormality in electronic control unit

[Recoverability]
<Control during fault>
- Recovered if signal becomes normal with starter switch in ON position.

<Warning lamp>
- Extinguished at 4th driving cycle after normal signal is input.

<Fault code>
- Automatically cleared at 40th warm up cycle after warning lamp is extinguished.
  (To clear as desired, erase from the memory.)

Driving cycle : “Starter switch ON to start engine till starter switch OFF” constitutes 1 driving cycle.
Warm up cycle : “Starter switch ON to start engine till starter switch OFF after coolant temperature increased and engine warmed up” constitutes 1 warm up cycle.

[Electronic Control Unit Connection Diagram]

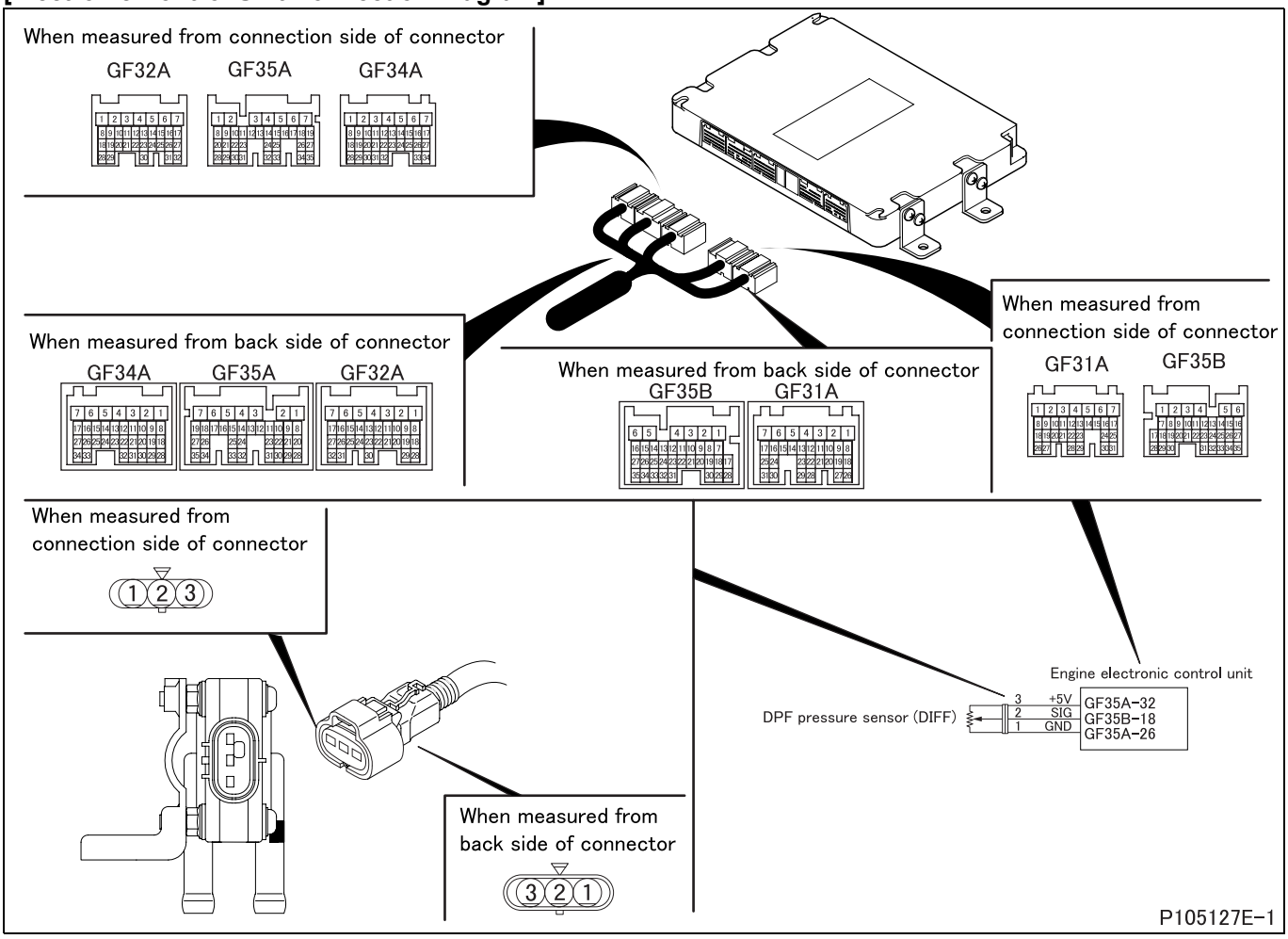

[Parts Identification and Location]

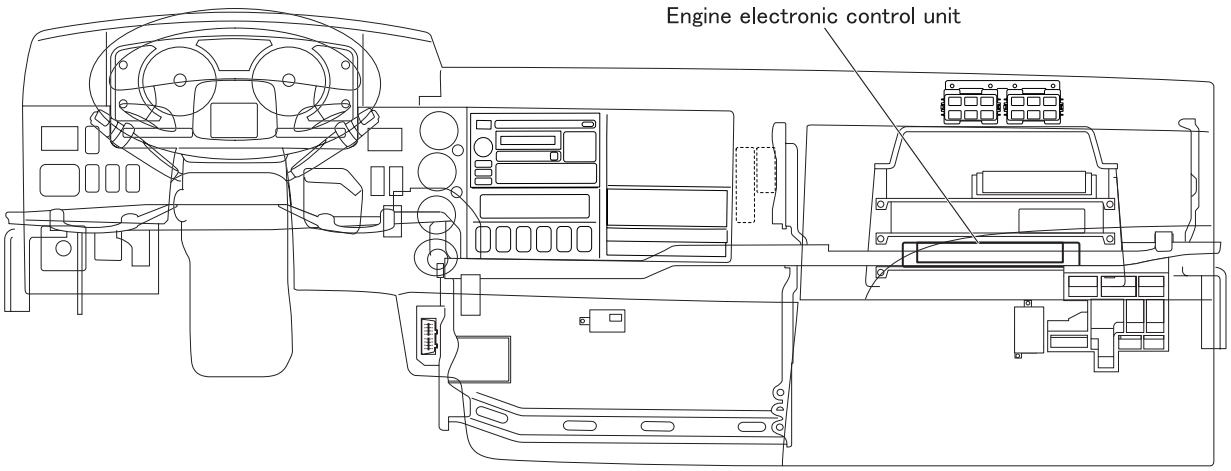

<FK>

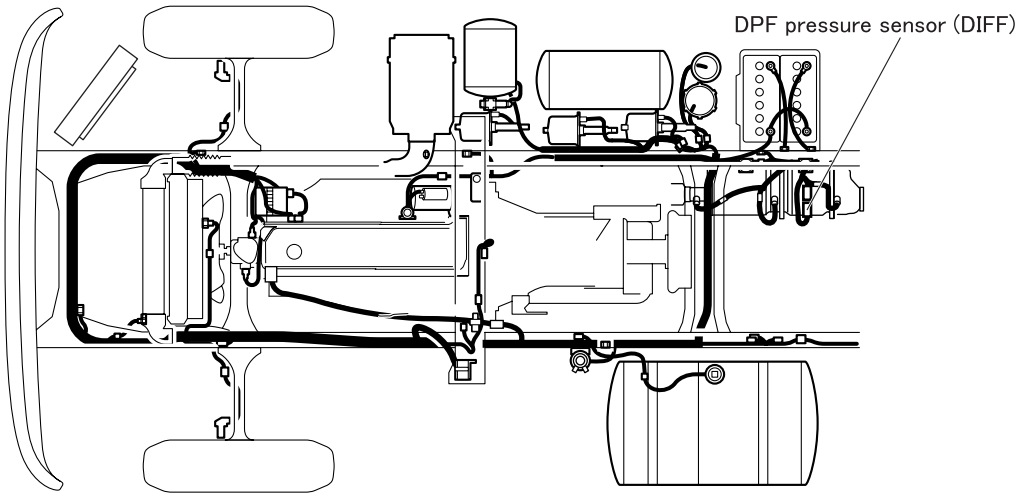

<FM>

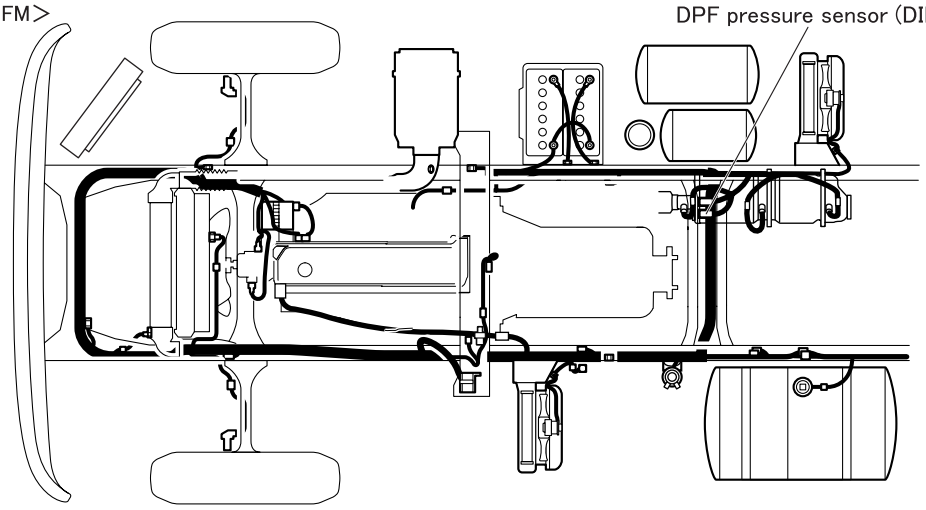

P105127E-2

[Fault diagnosis]

- Perform checks in the sequence of the following steps.

Step 1	Inspection items		Inspection by control data
	Maintenance item		Measure item No. 32 “DPF relative pressure” of Service Data.
	Inspection condition		Past failures include diesel particulate filter pressure sensor, while the current failures do not include diesel particulate filter pressure sensor.
	Requirements		When engine is stationary: 0 kPa {0 psi, 0 kgf/cm^2}
	Inspection result (Is the judging standard satisfied?)	YES	Go to transient fault (See Gr00.).
		NO	Go to step 2.

Step 2	Inspection items		Inspection by electronic control unit connector (signal)
	Maintenance item		Measure value of voltage between connector (GF35B) terminal No. 18 (+) and (GF35A) terminal No. 26 (–).
	Inspection condition		• Measure from back side of harness connector with each device connected to harness. • Starter switch: ON
	Requirements		1 to 4.5 V
	Inspection result (Is the judging standard satisfied?)	YES	Go to step 5.
		NO	Go to step 3.

Step 3	Inspection items		Inspection by electronic control unit connector (power supply)
	Maintenance item		Measure value of voltage between connector (GF35A) terminal No. 32 (+) and 26 (–).
	Inspection condition		• Measure from back side of harness connector with each device connected to harness. • Starter switch: ON
	Requirements		5 V
	Inspection result (Is the judging standard satisfied?)	YES	Go to step 4.
		NO	Go to step 5.

Step 4	Inspection items		Inspection by electronic control unit connector (ground)
	Maintenance item		Measure value of voltage between connector (GF35A) terminal No. 26 (+) and (GF32A) terminal No. 5 (–).
	Inspection condition		• Measure from back side of harness connector with each device connected to harness. • Starter switch: ON
	Requirements		0 V
	Inspection result (Is the judging standard satisfied?)	YES	Go to step 6.
		NO	Go to step 5.

Step 5	Inspection items		Inspection of electronic control unit connector
	Maintenance item		Inspection of connector
	Inspection condition		–
	Requirements		• Connector is properly connected. • No trace of water entry is found. • No corrosion is found in terminal. • Connection to terminal is appropriate.
	Inspection result (Is the judging standard satisfied?)	YES	Go to step 12.
		NO	Modify connector.

Step 6	Inspection items		Inspection of sensor connector
	Maintenance item		Inspection of connector
	Inspection condition		–
	Requirements		• Connector is properly connected. • No trace of water entry is found. • No corrosion is found in terminal. • Connection to terminal is appropriate.
	Inspection result (Is the judging standard satisfied?)	YES	Go to step 7.
		NO	Modify connector.

Step 7	Inspection items		Inspection of sensor unit
	Maintenance item		Measure value of voltage between connector terminal No. 2 (+) and 1 (–).
	Inspection condition		• Apply voltage DC 5 V across terminals No. 3 (+) and 1 (–). • Gradually increase applied air pressure.
	Requirements		• 0 ± 3.5 kPa {0 ± 0.5 psi, 0 ± 0.04 kgf/cm^2}: 1 V • 100 ± 3.5 kPa {15 ± 0.5 psi, 1.02 ± 0.04 kgf/cm^2}: 4.5 V
	Inspection result (Is the judging standard satisfied?)	YES	Go to step 8.
		NO	Replacement of sensor

<Step 7 inspection diagram>

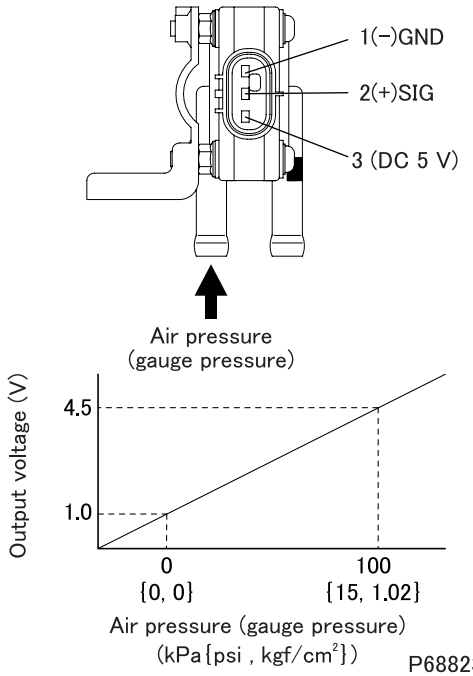

Step 8	Inspection items		Inspection of harness between electronic control unit and sensor (power supply)
	Maintenance item		Measure value of voltage between connector terminal No. 3 (+) and 1 (–).
	Inspection condition		• Measure from back side of harness connector with each device connected to harness. • Starter switch: ON
	Requirements		5 V
	Inspection result (Is the judging standard satisfied?)	YES	Go to step 10.
		NO	Go to step 9.

Step 9	Inspection items		Inspection of harness between electronic control unit and sensor (power supply)
	Maintenance item		Check circuit between sensor connector terminal No. 3 and electronic control unit connector (GF35A) terminal No. 32.
	Inspection condition		Disconnect each device from harness and measure from connection side of harness connector.
	Requirements		There is continuity.
	Inspection result (Is the judging standard satisfied?)	YES	Go to step 12.
		NO	Modify harness.

Step 10	Inspection items		Inspection of harness between electronic control unit and sensor (ground)
	Maintenance item		Check circuit between sensor connector terminal No. 1 and electronic control unit connector (GF35A) terminal No. 26.
	Inspection condition		Disconnect each device from harness and measure from connection side of harness connector.
	Requirements		There is continuity.
	Inspection result (Is the judging standard satisfied?)	YES	Go to step 11.
		NO	Modify harness.

Step 11	Inspection items		Inspection of harness between electronic control unit and sensor (signal)
	Maintenance item		Check circuit between sensor connector terminal No. 2 and electronic control unit connector (GF35B) terminal No. 18.
	Inspection condition		Disconnect each device from harness and measure from connection side of harness connector.
	Requirements		There is continuity.
	Inspection result (Is the judging standard satisfied?)	YES	Go to step 12.
		NO	Modify harness.

Step 12	Inspection items		Inspection by control data
	Maintenance item		Measure item No. 32 “DPF relative pressure”
	Inspection condition		Past failures include diesel particulate filter pressure sensor, while the current failures do not include diesel particulate filter pressure sensor.
	Requirements		When engine is stationary: 0 kPa {0 psi, 0 kgf/cm^2}
	Inspection result (Is the judging standard satisfied?)	YES	Go to transient fault (See Gr00.).
		NO	Replacement of electronic control unit

[Fault code]
Diagnosis code: P2454/Flash code: 97
[Monitor]
Abnormality of DPF pressure sensor (DIFF)
[Fault (outline)]
Low signal range check
[Diagnosis check]
- Output voltage of DPF pressure sensor (DIFF) is monitored.

[Code generation condition]
- Voltage of DPF pressure sensor (DIFF) remains under 0.2 V for approx. 2.5 seconds.
  (Warning lamp is lit and diagnosis code is displayed on first establishment of code generation condition.)

[Diagnosis check timing]
- When code generation condition is established after starter switch ON

[Diagnostic requirement]
- 2 seconds passed after starter switch ON
- 2 seconds passed after cranking
- Battery voltage: normal

[Control effected by electronic control unit during fault]
- Injection quantity is limited.
- Exhaust gas recirculation control is stopped.
- Throttle control is stopped.
- Diesel particulate filter regeneration (manual or automatic) is stopped.
- Control is carried out using backup value (0 kPa).

[Probable cause of trouble]
- Open-circuit or short-circuit of harness between electronic control unit and DPF pressure sensor (DIFF)
- Abnormality of each connector
- Abnormality of DPF pressure sensor (DIFF)
- Abnormality in electronic control unit

[Recoverability]
<Control during fault>
- Recovered if signal becomes normal with starter switch in ON position.

<Warning lamp>
- Extinguished at 4th driving cycle after normal signal is input.

<Fault code>
- Automatically cleared at 40th warm up cycle after warning lamp is extinguished.
  (To clear as desired, erase from the memory.)

Driving cycle : “Starter switch ON to start engine till starter switch OFF” constitutes 1 driving cycle.
Warm up cycle : “Starter switch ON to start engine till starter switch OFF after coolant temperature increased and engine warmed up” constitutes 1 warm up cycle.

[Electronic Control Unit Connection Diagram]

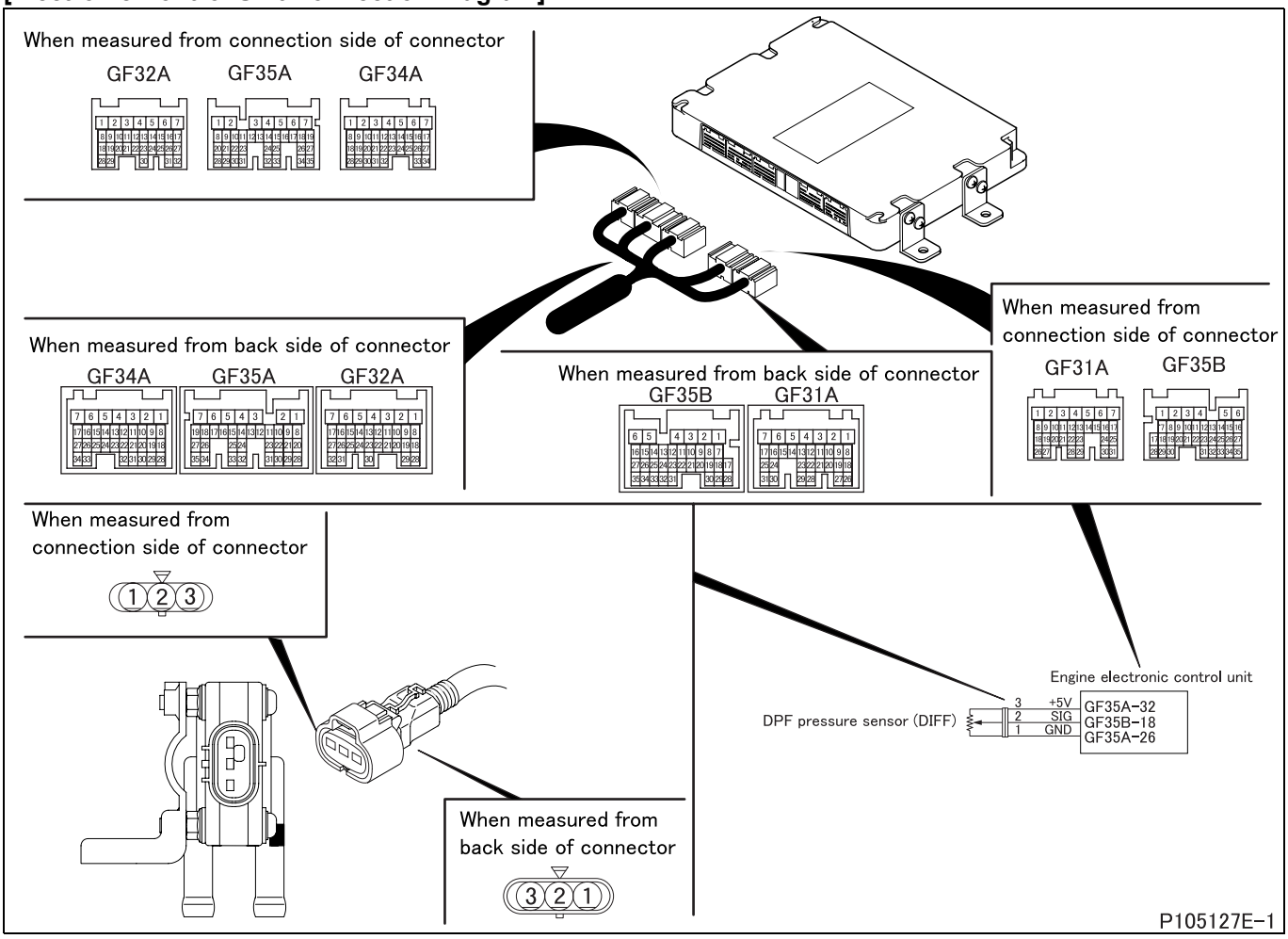

[Parts Identification and Location]

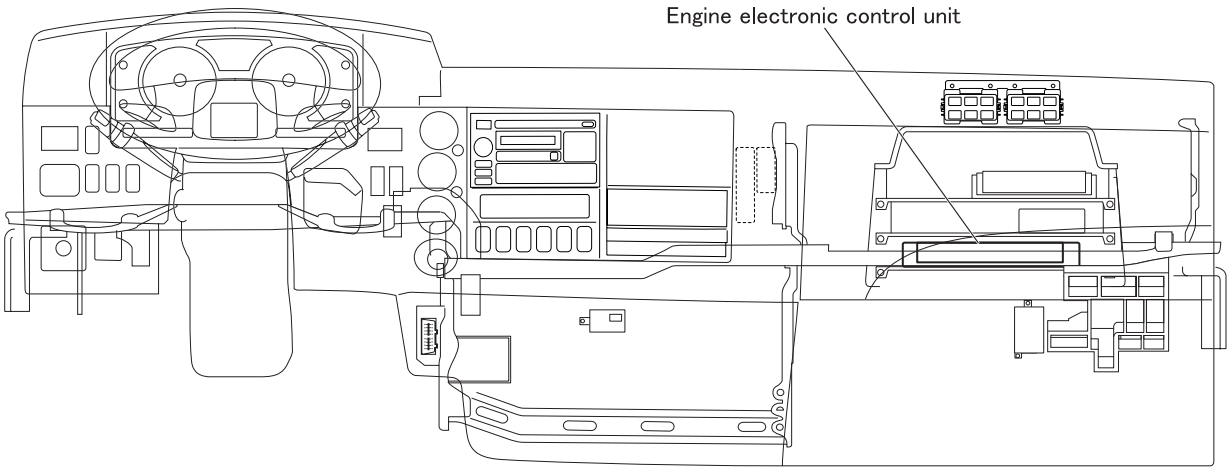

<FK>

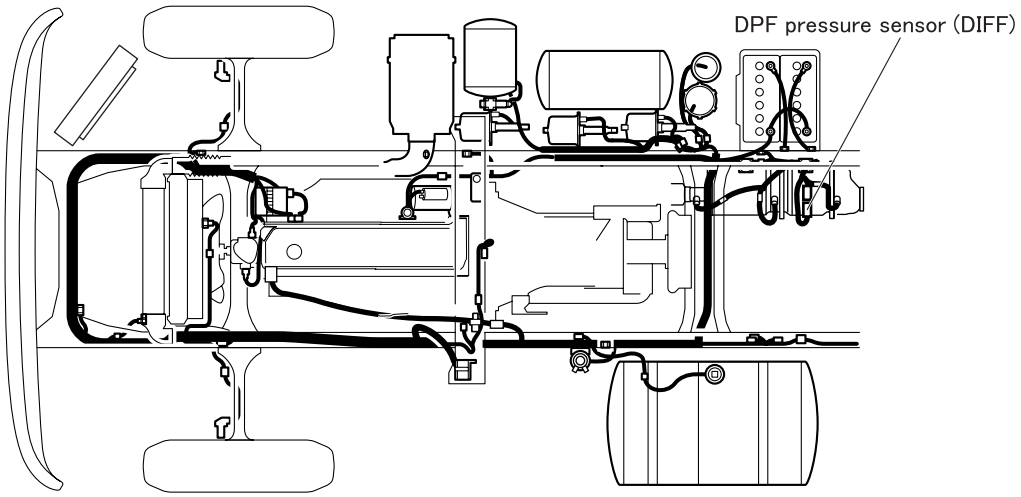

<FM>

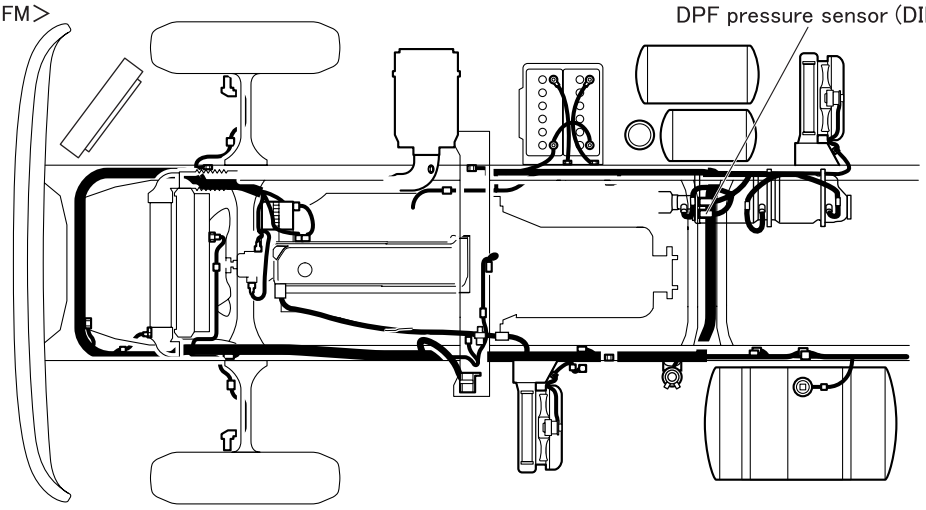

P105127E-2

[Fault diagnosis]

- Perform checks in the sequence of the following steps.

Step 1	Inspection items		Inspection by control data
	Maintenance item		Measure item No. 32 “DPF relative pressure” of Service Data.
	Inspection condition		Past failures include diesel particulate filter pressure sensor, while the current failures do not include diesel particulate filter pressure sensor.
	Requirements		When engine is stationary: 0 kPa {0 psi, 0 kgf/cm^2}
	Inspection result (Is the judging standard satisfied?)	YES	Go to transient fault (See Gr00.).
		NO	Go to step 2.

Step 2	Inspection items		Inspection by electronic control unit connector (signal)
	Maintenance item		Measure value of voltage between connector (GF35B) terminal No. 18 (+) and (GF35A) terminal No. 26 (–).
	Inspection condition		• Measure from back side of harness connector with each device connected to harness. • Starter switch: ON
	Requirements		1 to 4.5 V
	Inspection result (Is the judging standard satisfied?)	YES	Go to step 5.
		NO	Go to step 3.

Step 3	Inspection items		Inspection by electronic control unit connector (power supply)
	Maintenance item		Measure value of voltage between connector (GF35A) terminal No. 32 (+) and 26 (–).
	Inspection condition		• Measure from back side of harness connector with each device connected to harness. • Starter switch: ON
	Requirements		5 V
	Inspection result (Is the judging standard satisfied?)	YES	Go to step 4.
		NO	Go to step 5.

Step 4	Inspection items		Inspection by electronic control unit connector (ground)
	Maintenance item		Measure value of voltage between connector (GF35A) terminal No. 26 (+) and (GF32A) terminal No. 5 (–).
	Inspection condition		• Measure from back side of harness connector with each device connected to harness. • Starter switch: ON
	Requirements		0 V
	Inspection result (Is the judging standard satisfied?)	YES	Go to step 6.
		NO	Go to step 5.

Step 5	Inspection items		Inspection of electronic control unit connector
	Maintenance item		Inspection of connector
	Inspection condition		–
	Requirements		• Connector is properly connected. • No trace of water entry is found. • No corrosion is found in terminal. • Connection to terminal is appropriate.
	Inspection result (Is the judging standard satisfied?)	YES	Go to step 12.
		NO	Modify connector.

Step 6	Inspection items		Inspection of sensor connector
	Maintenance item		Inspection of connector
	Inspection condition		–
	Requirements		• Connector is properly connected. • No trace of water entry is found. • No corrosion is found in terminal. • Connection to terminal is appropriate.
	Inspection result (Is the judging standard satisfied?)	YES	Go to step 7.
		NO	Modify connector.

Step 7	Inspection items		Inspection of sensor unit
	Maintenance item		Measure value of voltage between connector terminal No. 2 (+) and 1 (–).
	Inspection condition		• Apply voltage DC 5 V across terminals No. 3 (+) and 1 (–). • Gradually increase applied air pressure.
	Requirements		• 0 ± 3.5 kPa {0 ± 0.5 psi, 0 ± 0.04 kgf/cm^2}: 1 V • 100 ± 3.5 kPa {15 ± 0.5 psi, 1.02 ± 0.04 kgf/cm^2}: 4.5 V
	Inspection result (Is the judging standard satisfied?)	YES	Go to step 8.
		NO	Replacement of sensor

<Step 7 inspection diagram>

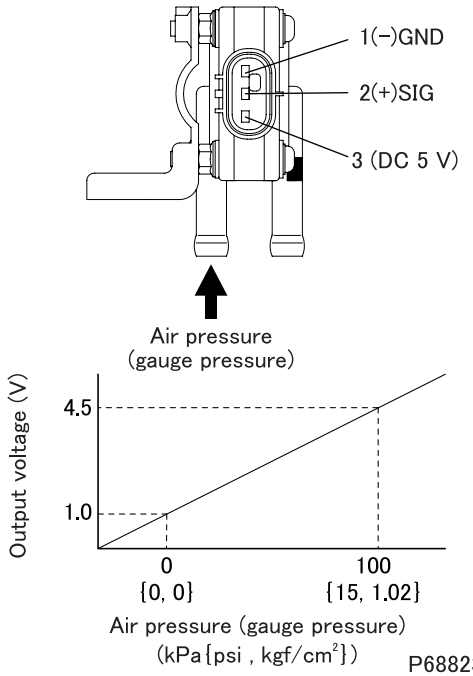

Step 8	Inspection items		Inspection of harness between electronic control unit and sensor (power supply)
	Maintenance item		Measure value of voltage between connector terminal No. 3 (+) and 1 (–).
	Inspection condition		• Measure from back side of harness connector with each device connected to harness. • Starter switch: ON
	Requirements		5 V
	Inspection result (Is the judging standard satisfied?)	YES	Go to step 10.
		NO	Go to step 9.

Step 9	Inspection items		Inspection of harness between electronic control unit and sensor (power supply)
	Maintenance item		Check circuit between sensor connector terminal No. 3 and electronic control unit connector (GF35A) terminal No. 32.
	Inspection condition		Disconnect each device from harness and measure from connection side of harness connector.
	Requirements		There is continuity.
	Inspection result (Is the judging standard satisfied?)	YES	Go to step 12.
		NO	Modify harness.

Step 10	Inspection items		Inspection of harness between electronic control unit and sensor (ground)
	Maintenance item		Check circuit between sensor connector terminal No. 1 and electronic control unit connector (GF35A) terminal No. 26.
	Inspection condition		Disconnect each device from harness and measure from connection side of harness connector.
	Requirements		There is continuity.
	Inspection result (Is the judging standard satisfied?)	YES	Go to step 11.
		NO	Modify harness.

Step 11	Inspection items		Inspection of harness between electronic control unit and sensor (signal)
	Maintenance item		Check circuit between sensor connector terminal No. 2 and electronic control unit connector (GF35B) terminal No. 18.
	Inspection condition		Disconnect each device from harness and measure from connection side of harness connector.
	Requirements		There is continuity.
	Inspection result (Is the judging standard satisfied?)	YES	Go to step 12.
		NO	Modify harness.

Step 12	Inspection items		Inspection by control data
	Maintenance item		Measure item No. 32 “DPF relative pressure”
	Inspection condition		Past failures include diesel particulate filter pressure sensor, while the current failures do not include diesel particulate filter pressure sensor.
	Requirements		When engine is stationary: 0 kPa {0 psi, 0 kgf/cm^2}
	Inspection result (Is the judging standard satisfied?)	YES	Go to transient fault (See Gr00.).
		NO	Replacement of electronic control unit

[Fault code]
Diagnosis code: P2455/Flash code: 97
[Monitor]
Abnormality of DPF pressure sensor (DIFF)
[Fault (outline)]
High signal range check
[Diagnosis check]
- Output voltage of DPF pressure sensor (DIFF) is monitored.

[Code generation condition]
- Voltage of DPF pressure sensor (DIFF) remains over 4.8 V for approx. 2.5 seconds.
  (Warning lamp is lit and diagnosis code is displayed on first establishment of code generation condition.)

[Diagnosis check timing]
- When code generation condition is established after starter switch ON

[Diagnostic requirement]
- 2 seconds passed after starter switch ON
- 2 seconds passed after cranking
- Battery voltage: normal

[Control effected by electronic control unit during fault]
- Injection quantity is limited.
- Exhaust gas recirculation control is stopped.
- Throttle control is stopped.
- Diesel particulate filter regeneration (manual or automatic) is stopped.
- Control is carried out using backup value (0 kPa).

[Probable cause of trouble]
- Open-circuit or short-circuit of harness between electronic control unit and DPF pressure sensor (DIFF)
- Abnormality of each connector
- Abnormality of DPF pressure sensor (DIFF)
- Abnormality in electronic control unit

[Recoverability]
<Control during fault>
- Recovered if signal becomes normal with starter switch in ON position.

<Warning lamp>
- Extinguished at 4th driving cycle after normal signal is input.

<Fault code>
- Automatically cleared at 40th warm up cycle after warning lamp is extinguished.
  (To clear as desired, erase from the memory.)

Driving cycle : “Starter switch ON to start engine till starter switch OFF” constitutes 1 driving cycle.
Warm up cycle : “Starter switch ON to start engine till starter switch OFF after coolant temperature increased and engine warmed up” constitutes 1 warm up cycle.

[Electronic Control Unit Connection Diagram]

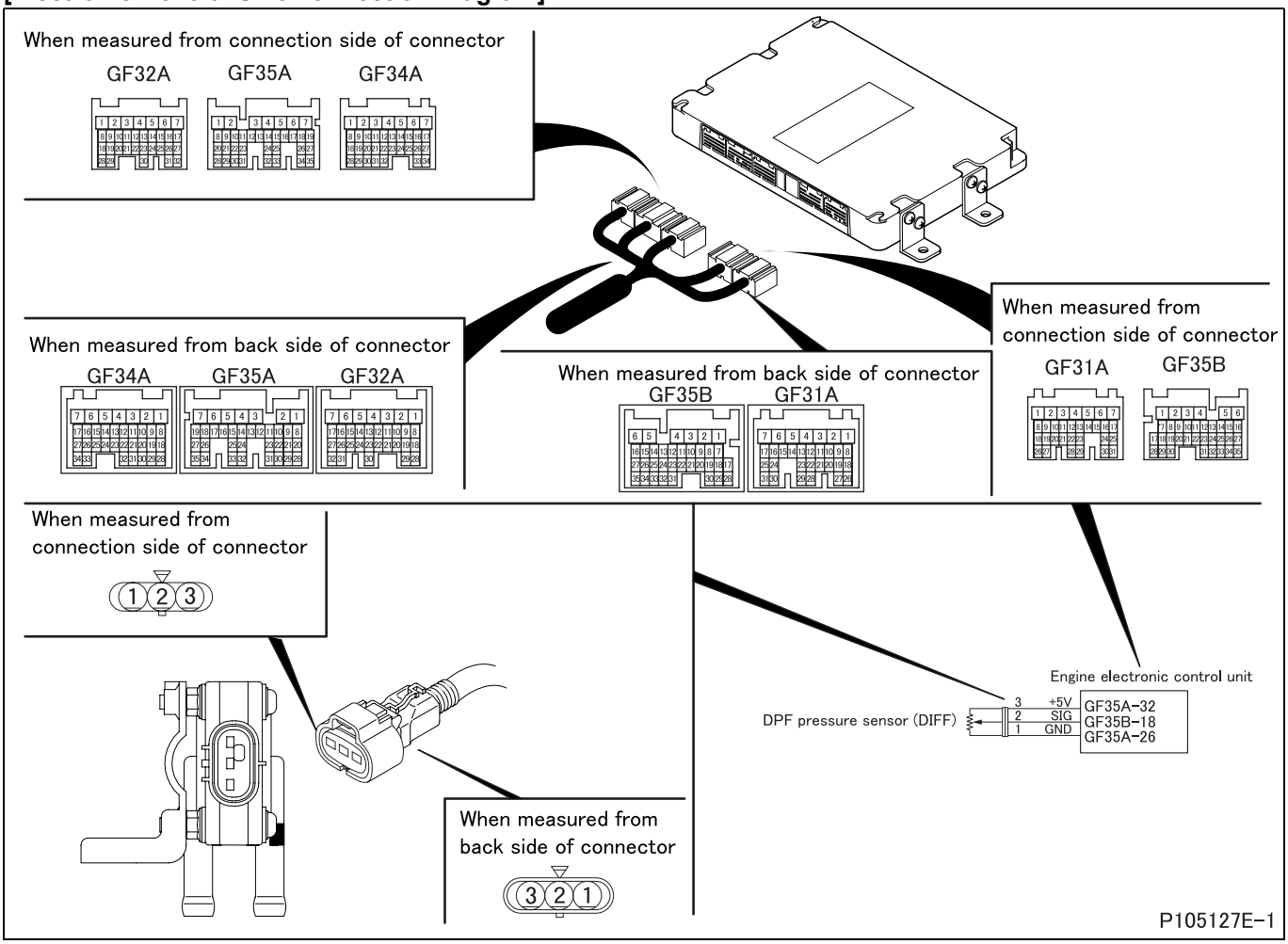

[Parts Identification and Location]

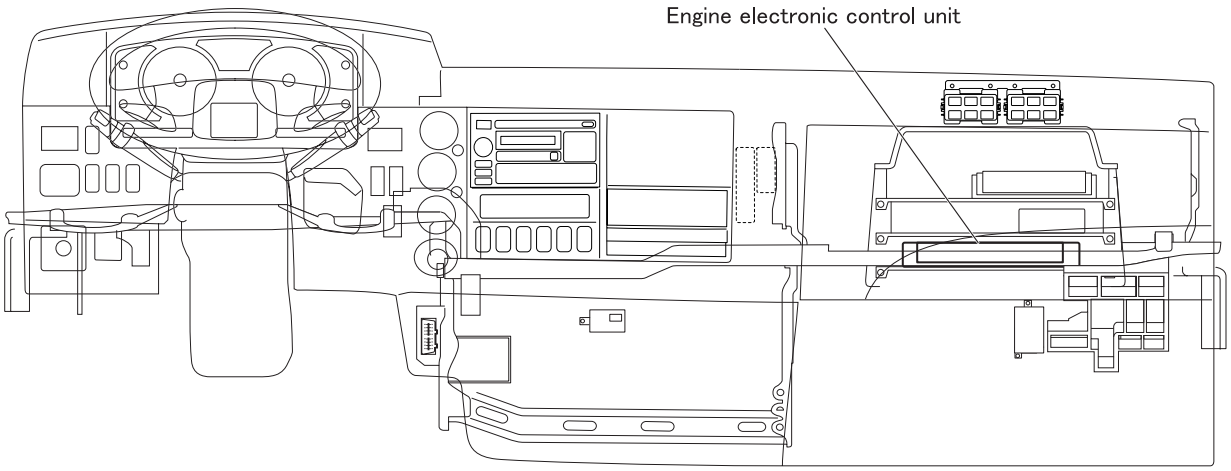

<FK>

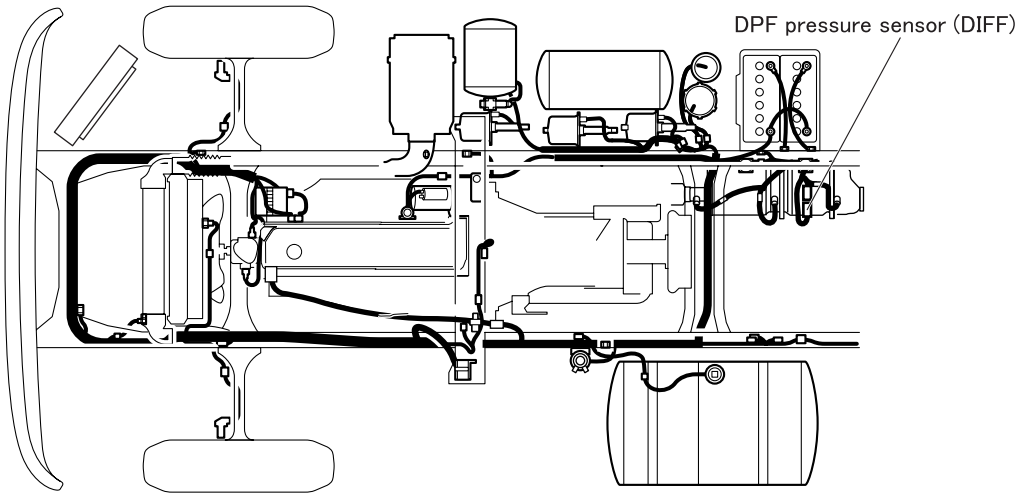

<FM>

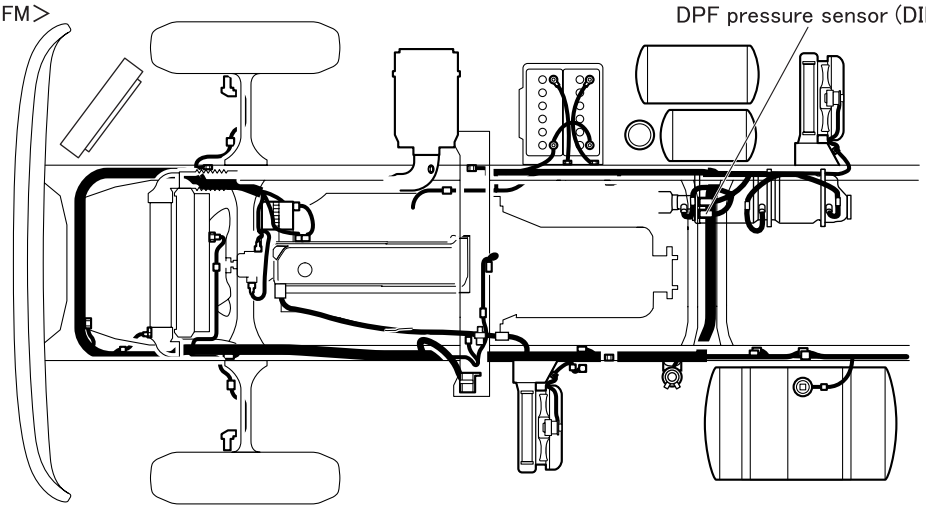

P105127E-2

[Fault diagnosis]

- Perform checks in the sequence of the following steps.

Step 1	Inspection items		Inspection by control data
	Maintenance item		Measure item No. 32 “DPF relative pressure” of Service Data.
	Inspection condition		Past failures include diesel particulate filter pressure sensor, while the current failures do not include diesel particulate filter pressure sensor.
	Requirements		When engine is stationary: 0 kPa {0 psi, 0 kgf/cm^2}
	Inspection result (Is the judging standard satisfied?)	YES	Go to transient fault (See Gr00.).
		NO	Go to step 2.

Step 2	Inspection items		Inspection by electronic control unit connector (signal)
	Maintenance item		Measure value of voltage between connector (GF35B) terminal No. 18 (+) and (GF35A) terminal No. 26 (–).
	Inspection condition		• Measure from back side of harness connector with each device connected to harness. • Starter switch: ON
	Requirements		1 to 4.5 V
	Inspection result (Is the judging standard satisfied?)	YES	Go to step 5.
		NO	Go to step 3.

Step 3	Inspection items		Inspection by electronic control unit connector (power supply)
	Maintenance item		Measure value of voltage between connector (GF35A) terminal No. 32 (+) and 26 (–).
	Inspection condition		• Measure from back side of harness connector with each device connected to harness. • Starter switch: ON
	Requirements		5 V
	Inspection result (Is the judging standard satisfied?)	YES	Go to step 4.
		NO	Go to step 5.

Step 4	Inspection items		Inspection by electronic control unit connector (ground)
	Maintenance item		Measure value of voltage between connector (GF35A) terminal No. 26 (+) and (GF32A) terminal No. 5 (–).
	Inspection condition		• Measure from back side of harness connector with each device connected to harness. • Starter switch: ON
	Requirements		0 V
	Inspection result (Is the judging standard satisfied?)	YES	Go to step 6.
		NO	Go to step 5.

Step 5	Inspection items		Inspection of electronic control unit connector
	Maintenance item		Inspection of connector
	Inspection condition		–
	Requirements		• Connector is properly connected. • No trace of water entry is found. • No corrosion is found in terminal. • Connection to terminal is appropriate.
	Inspection result (Is the judging standard satisfied?)	YES	Go to step 12.
		NO	Modify connector.

Step 6	Inspection items		Inspection of sensor connector
	Maintenance item		Inspection of connector
	Inspection condition		–
	Requirements		• Connector is properly connected. • No trace of water entry is found. • No corrosion is found in terminal. • Connection to terminal is appropriate.
	Inspection result (Is the judging standard satisfied?)	YES	Go to step 7.
		NO	Modify connector.

Step 7	Inspection items		Inspection of sensor unit
	Maintenance item		Measure value of voltage between connector terminal No. 2 (+) and 1 (–).
	Inspection condition		• Apply voltage DC 5 V across terminals No. 3 (+) and 1 (–). • Gradually increase applied air pressure.
	Requirements		• 0 ± 3.5 kPa {0 ± 0.5 psi, 0 ± 0.04 kgf/cm^2}: 1 V • 100 ± 3.5 kPa {15 ± 0.5 psi, 1.02 ± 0.04 kgf/cm^2}: 4.5 V
	Inspection result (Is the judging standard satisfied?)	YES	Go to step 8.
		NO	Replacement of sensor

<Step 7 inspection diagram>

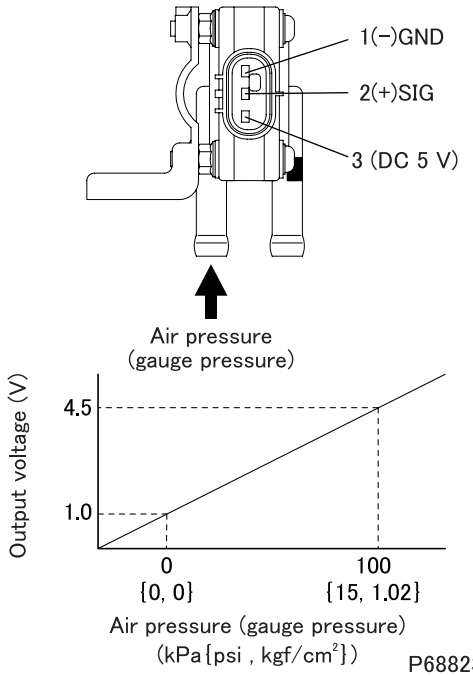

Step 8	Inspection items		Inspection of harness between electronic control unit and sensor (power supply)
	Maintenance item		Measure value of voltage between connector terminal No. 3 (+) and 1 (–).
	Inspection condition		• Measure from back side of harness connector with each device connected to harness. • Starter switch: ON
	Requirements		5 V
	Inspection result (Is the judging standard satisfied?)	YES	Go to step 10.
		NO	Go to step 9.

Step 9	Inspection items		Inspection of harness between electronic control unit and sensor (power supply)
	Maintenance item		Check circuit between sensor connector terminal No. 3 and electronic control unit connector (GF35A) terminal No. 32.
	Inspection condition		Disconnect each device from harness and measure from connection side of harness connector.
	Requirements		There is continuity.
	Inspection result (Is the judging standard satisfied?)	YES	Go to step 12.
		NO	Modify harness.

Step 10	Inspection items		Inspection of harness between electronic control unit and sensor (ground)
	Maintenance item		Check circuit between sensor connector terminal No. 1 and electronic control unit connector (GF35A) terminal No. 26.
	Inspection condition		Disconnect each device from harness and measure from connection side of harness connector.
	Requirements		There is continuity.
	Inspection result (Is the judging standard satisfied?)	YES	Go to step 11.
		NO	Modify harness.

Step 11	Inspection items		Inspection of harness between electronic control unit and sensor (signal)
	Maintenance item		Check circuit between sensor connector terminal No. 2 and electronic control unit connector (GF35B) terminal No. 18.
	Inspection condition		Disconnect each device from harness and measure from connection side of harness connector.
	Requirements		There is continuity.
	Inspection result (Is the judging standard satisfied?)	YES	Go to step 12.
		NO	Modify harness.

Step 12	Inspection items		Inspection by control data
	Maintenance item		Measure item No. 32 “DPF relative pressure”
	Inspection condition		Past failures include diesel particulate filter pressure sensor, while the current failures do not include diesel particulate filter pressure sensor.
	Requirements		When engine is stationary: 0 kPa {0 psi, 0 kgf/cm^2}
	Inspection result (Is the judging standard satisfied?)	YES	Go to transient fault (See Gr00.).
		NO	Replacement of electronic control unit

[Fault code]
Diagnosis code: P2510/Flash code: 83
[Monitor]
Abnormality in electronic control unit main relay
[Fault (outline)]
Main relay fault over
[Diagnosis check]
- Electronic control unit main relay operation is monitored.

[Code generation condition]
Either of the following is monitored.
<Condition (1): In case that operation is terminated with excitation failure registered>
- If operation is finished normally in accordance with main relay OFF command from exhaust gas recirculation, the fact is recorded in exhaust gas recirculation memory, and judgment of the fact is made when starter switch is turned ON next time. (Trouble is registered at first occurrence but diagnosis code is not generated because counting up the number of times of trouble occurrence is impossible if operation is finished. It is generated when engine shutdown in such a condition is experienced twice in succession.)

<Condition (2): In case that relay is stuck ON>
- This trouble is recognized when main relay does not stop its operation even when main relay OFF command is issued from ECU. In such a case, recording the fact in ECU memory is performed, and diagnosis code is generated when starter switch is turned ON next time (Warning lamp is lit on second establishment of code generation condition).

[Diagnosis check timing]
- When code generation condition is established after starter switch ON

[Diagnostic requirement]
<Conditions (1)>
- 2 seconds passed after starter switch ON
- 2 seconds passed after cranking
- Battery voltage: normal

<Conditions (1) and (2)>
- Electronic control unit main relay: normal
- Electronic control unit main relay start: normal

[Control effected by electronic control unit during fault]
- Effects no special control.

[Probable cause of trouble]
- Open-circuit or short-circuit of harness between electronic control unit and electronic control unit main relay
- Abnormality of each connector
- Abnormality in electronic control unit main relay
- Abnormality in electronic control unit

[Recoverability]
<Control during fault>
- Recovered if signal becomes normal with starter switch in ON position.

<Warning lamp>
- Extinguished at 4th driving cycle after normal signal is input.

<Fault code>
- Automatically cleared at 40th warm up cycle after warning lamp is extinguished.
  (To clear as desired, erase from the memory.)

Driving cycle : “Starter switch ON to start engine till starter switch OFF” constitutes 1 driving cycle.
Warm up cycle : “Starter switch ON to start engine till starter switch OFF after coolant temperature increased and engine warmed up” constitutes 1 warm up cycle.

[Electronic Control Unit Connection Diagram]

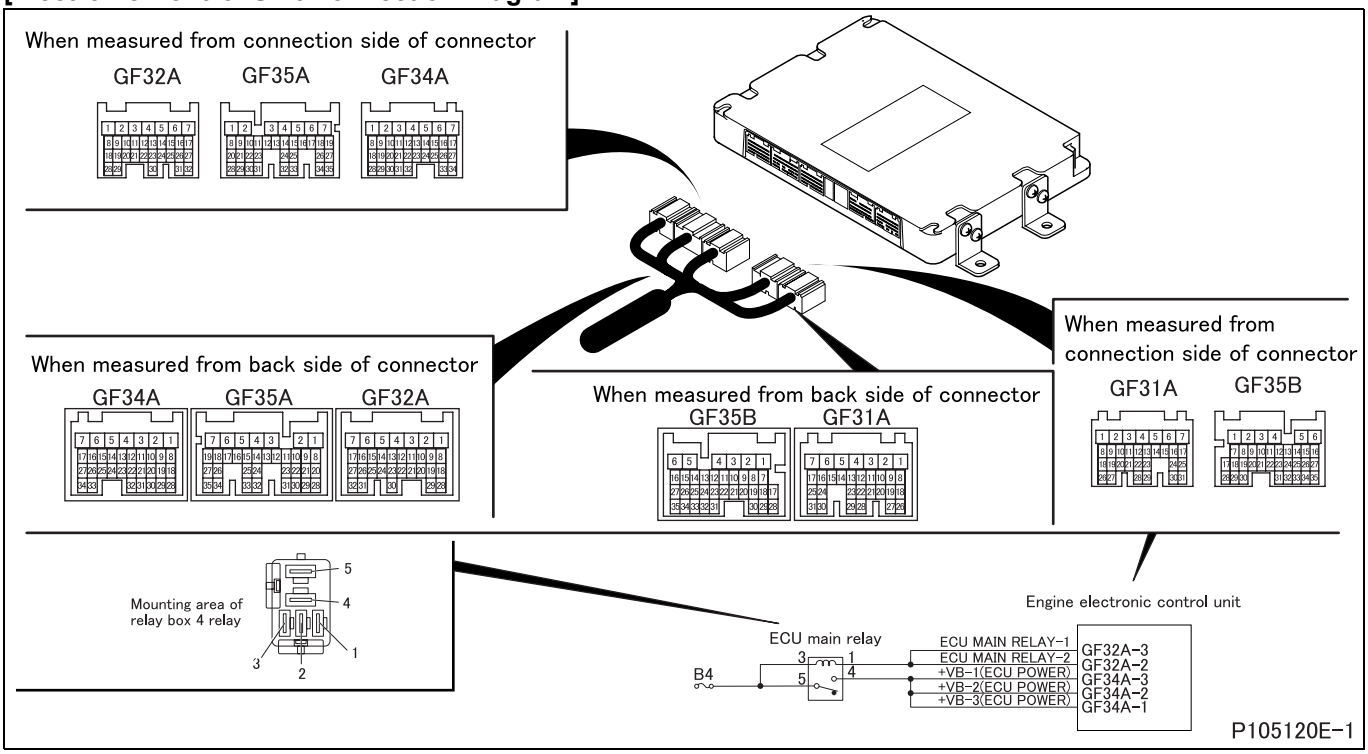

[Parts Identification and Location]

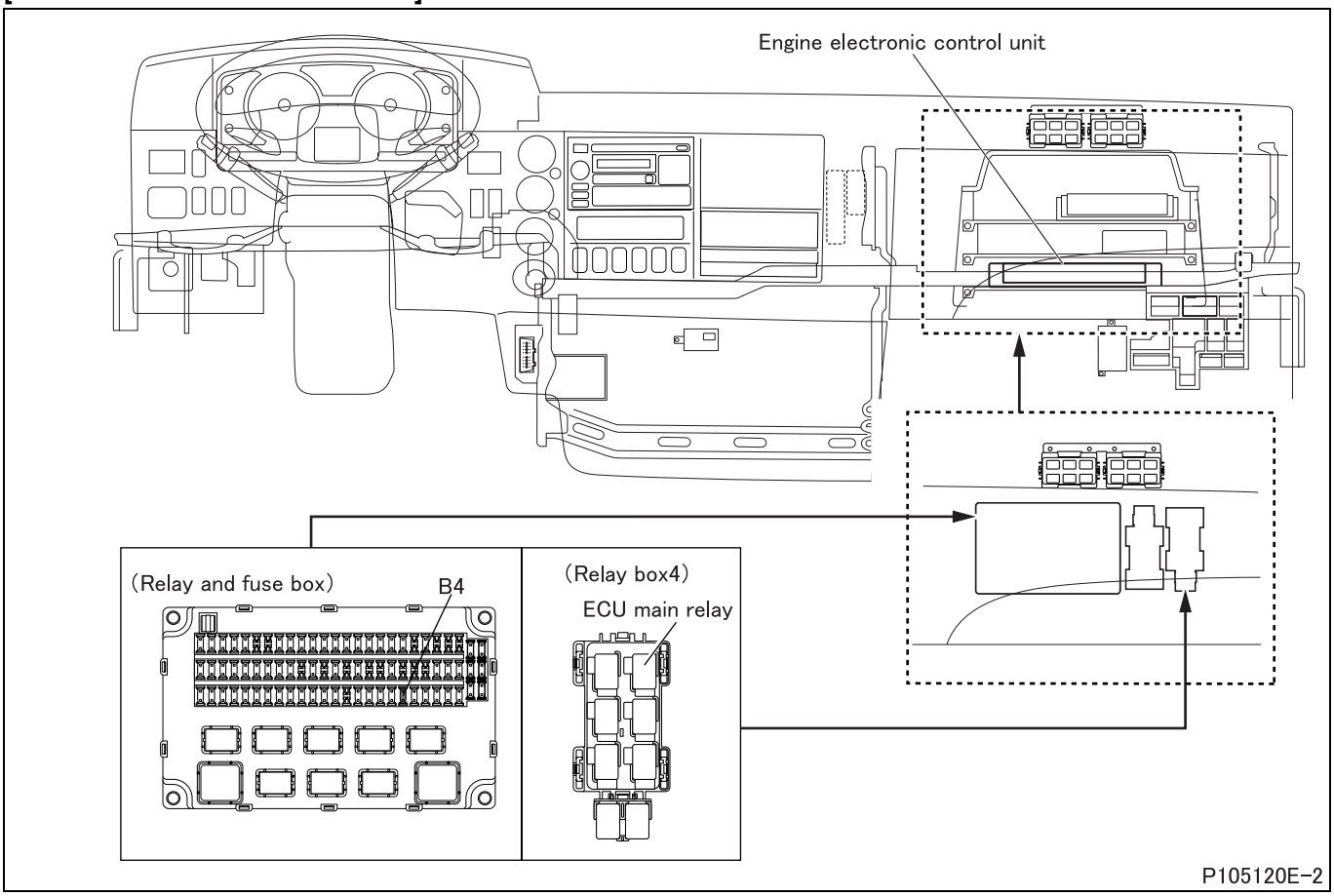

[Fault diagnosis]

- Perform checks in the sequence of the following steps.

Step 1	Inspection items		Inspection of electronic control unit connector
	Maintenance item		Inspection of connector
	Inspection condition		–
	Requirements		• Connector is properly connected. • No trace of water entry is found. • No corrosion is found in terminal. • Connection to terminal is appropriate.
	Inspection result (Is the judging standard satisfied?)	YES	Go to step 2.
		NO	Modify connector.

Step 2	Inspection items		Inspection of relay connector
	Maintenance item		Inspection of connector
	Inspection condition		–
	Requirements		• Connector is properly connected. • No trace of water entry is found. • No corrosion is found in terminal. • Connection to terminal is appropriate.
	Inspection result (Is the judging standard satisfied?)	YES	Go to step 3.
		NO	Modify connector.

Step 3	Inspection items		Inspection of relay unit
	Maintenance item		Measure continuity between terminal No. 4 (+) and 5 (–) when relay operates.
	Inspection condition		Apply battery voltage between terminals No. 3 (+) and 1 (–).
	Requirements		There is continuity.
	Inspection result (Is the judging standard satisfied?)	YES	Go to step 4.
		NO	Replacement of relay

<Step 3 inspection diagram>

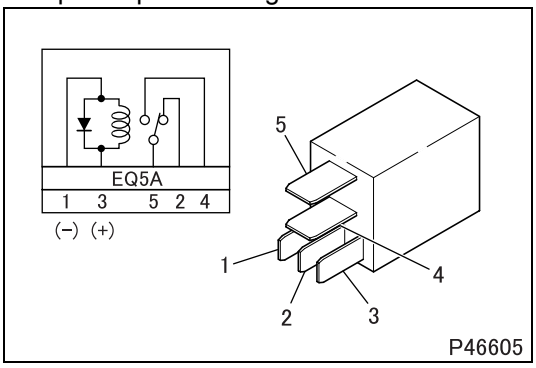

Step 4	Inspection items		Inspection of harness between relay (coil side) and electronic control unit
	Maintenance item		Check circuit between relay connector terminal No. 1 and electronic control unit connector (GF32A) terminal No. 2 or 3.
	Inspection condition		Disconnect each device from harness and measure from connection side of harness connector.
	Requirements		There is continuity.
	Inspection result (Is the judging standard satisfied?)	YES	Go to step 5.
		NO	Modify harness.

Step 5	Inspection items		Inspection of harness between relay (contact side) and electronic control unit
	Maintenance item		Check circuit between relay connector terminal No. 4 and electronic control unit connector (GF34A) terminal No. 1, 2 or 3.
	Inspection condition		Disconnect each device from harness and measure from connection side of harness connector.
	Requirements		There is continuity.
	Inspection result (Is the judging standard satisfied?)	YES	Go to step 6.
		NO	Modify harness.

Step 6	Inspection items		Inspection of harness between fuse (B4) and relay
	Maintenance item		Check circuit between fuse (B4) and relay connector terminal No. 3 or 5.
	Inspection condition		Disconnect each device from harness and measure from connection side of harness connector.
	Requirements		There is continuity.
	Inspection result (Is the judging standard satisfied?)	YES	Replacement of electronic control unit
		NO	Modify harness.

[Fault code]
Diagnosis code: U0002/Flash code: –
[Monitor]
Abnormality in controller area network 2 communication (electronic drive unit)
[Fault (outline)]
Controller area network bus OFF
[Diagnosis check]
- Controller area network 2 between engine electronic control unit and each electronic drive unit is monitored for abnormality.

[Code generation condition]
- Controller area network communication remains disabled for 0.2 second even after 3 seconds of starter switch ON. (Warning lamp is lit and diagnosis code is displayed on first establishment of code generation condition.)

[Diagnosis check timing]
- When code generation condition is established after starter switch ON

[Diagnostic requirement]
- 3 seconds passed after starter switch ON

[Control effected by electronic control unit during fault]
- Effects no special control.

[Probable cause of trouble]
- Open-circuit or short-circuit of harness between engine electronic control unit and each electronic drive unit (exhaust gas recirculation, intake throttle)
- Abnormality of each connector
- Abnormality of engine electronic control unit
- Abnormality of exhaust gas recirculation electronic drive unit
- Abnormality of throttle electronic drive unit
- Abnormality of controller area network resistor in engine electronic control unit
- Abnormality of controller area network resistor

[Recoverability]
<Control during fault>
- Recovered if signal becomes normal with starter switch in ON position.

<Warning lamp>
- Extinguished at 4th driving cycle after normal signal is input.

<Fault code>
- Automatically cleared at 40th warm up cycle after warning lamp is extinguished.
  (To clear as desired, erase from the memory.)

Driving cycle : “Starter switch ON to start engine till starter switch OFF” constitutes 1 driving cycle.
Warm up cycle : “Starter switch ON to start engine till starter switch OFF after coolant temperature increased and engine warmed up” constitutes 1 warm up cycle.

[Electronic Control Unit Connection Diagram]

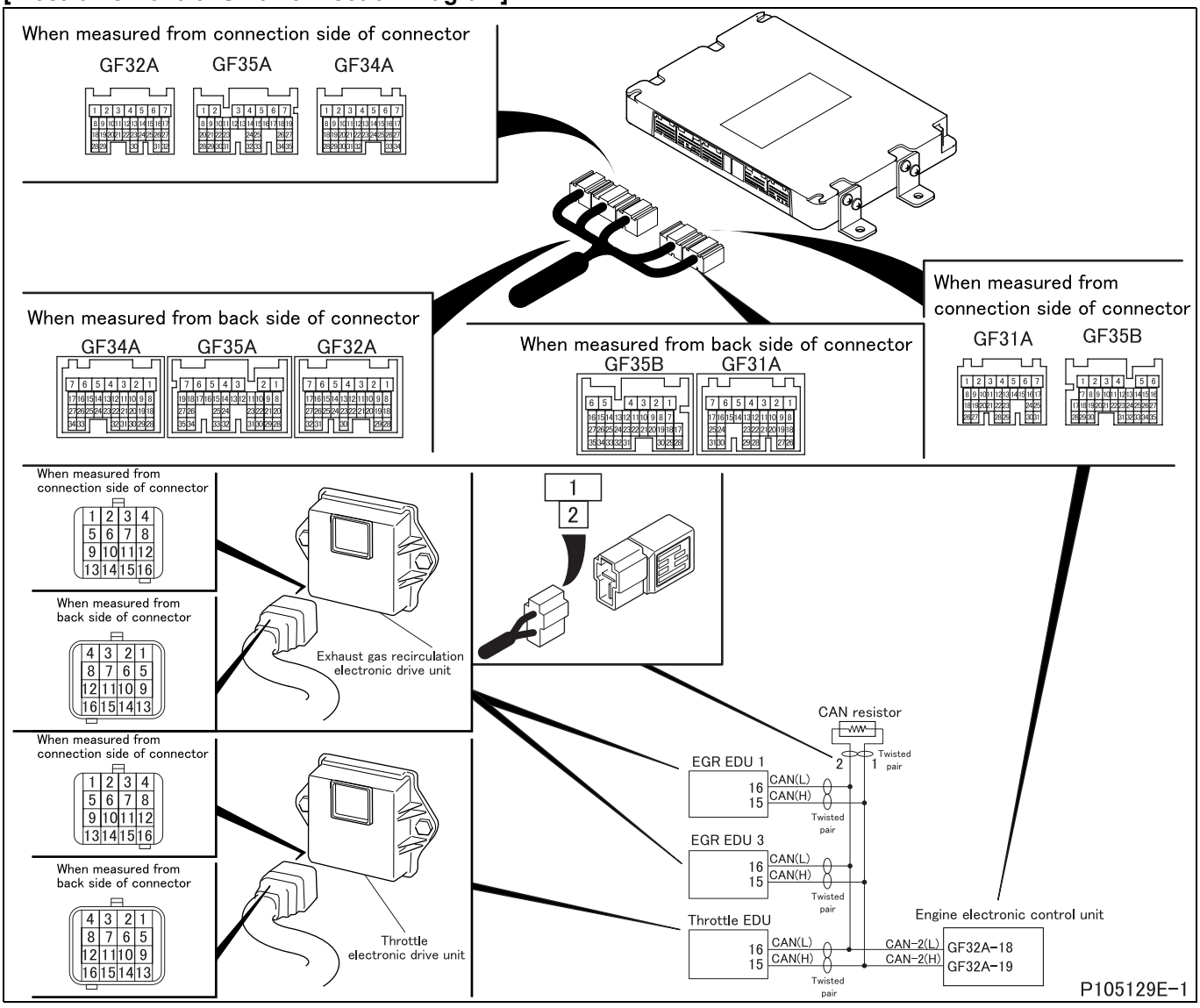

[Parts Identification and Location]

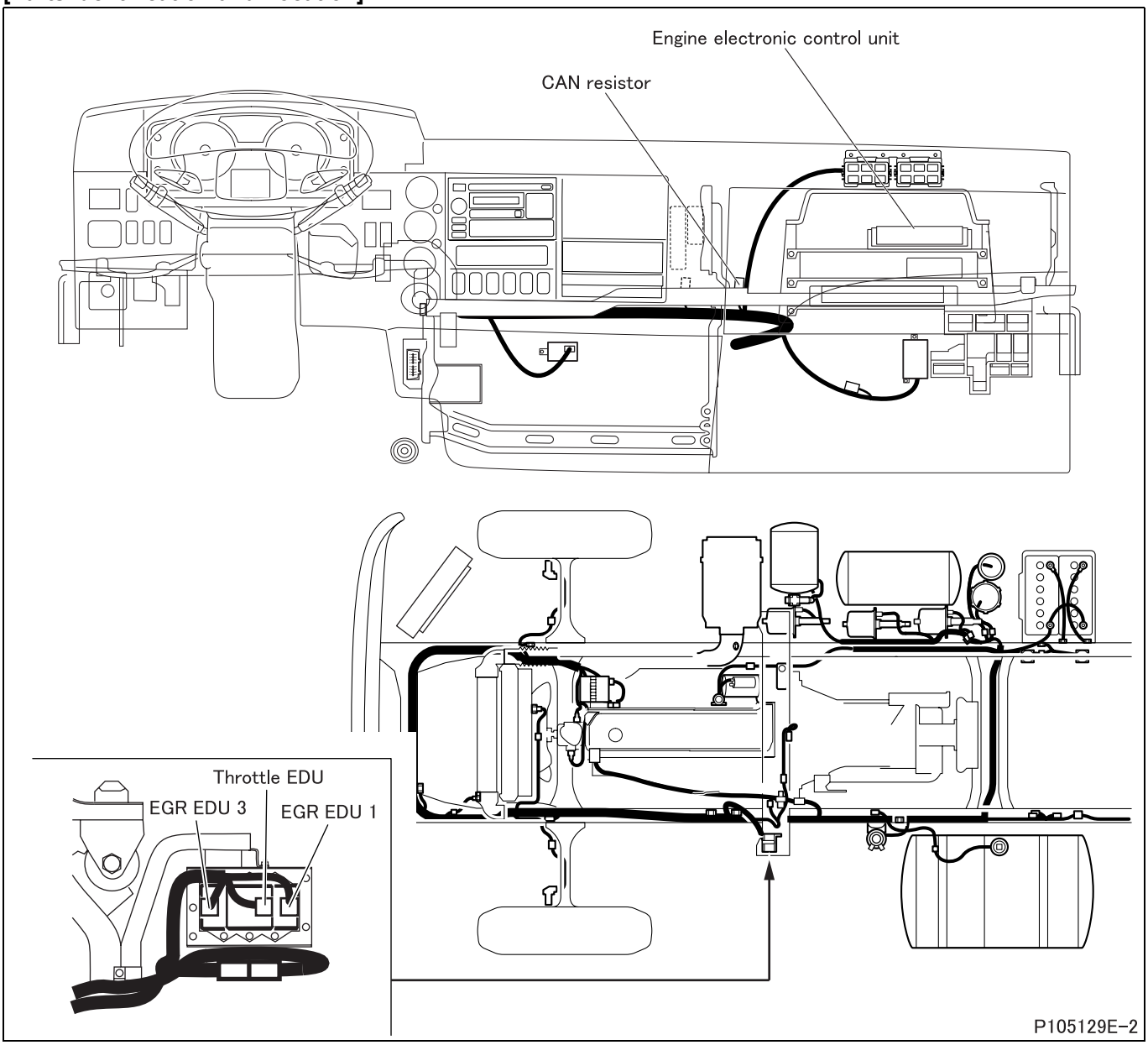

[Fault diagnosis]

- Perform checks in the sequence of the following steps.

Step 1	Inspection items		Inspection by engine electronic control unit connector
	Maintenance item		Measure value of resistance between engine electronic control unit connector (GF32A) terminal No. 18 and 19.
	Inspection condition		Disconnect each device from harness and measure from connection side of harness connector.
	Requirements		120 ± 6 Ω
	Inspection result (Is the judging standard satisfied?)	YES	Go to step 7.
		NO	Go to step 2.

Step 2	Inspection items		Inspection of controller area network resistor connector
	Maintenance item		Inspection of connector
	Inspection condition		–
	Requirements		• Connector is properly connected. • No trace of water entry is found. • No corrosion is found in terminal. • Connection to terminal is appropriate.
	Inspection result (Is the judging standard satisfied?)	YES	Go to step 3.
		NO	Modify connector.

Step 3	Inspection items		Inspection of controller area network resistor unit
	Maintenance item		Measure value of resistance between connector terminal No. 1 and No. 2.
	Inspection condition		Disconnect connector and measure resistor side.
	Requirements		120 ± 6 Ω
	Inspection result (Is the judging standard satisfied?)	YES	Go to step 4.
		NO	Replacement of controller area network resistor

<Step 3 inspection diagram>

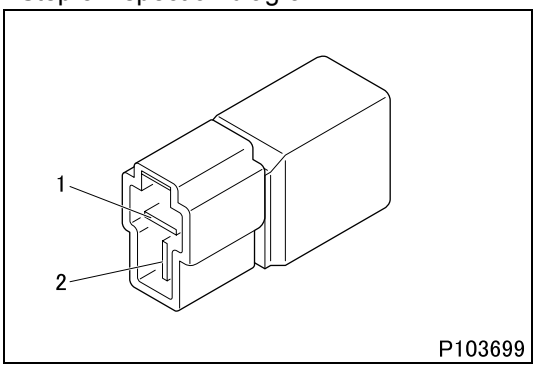

Step 4	Inspection items		Inspection of harness between engine electronic control unit and controller area network resistor (HIGH)
	Maintenance item		Check circuit between controller area network resistor connector terminal No. 1 and engine electronic control unit connector (GF32A) terminal No. 19.
	Inspection condition		Disconnect each device from harness and measure from connection side of harness connector.
	Requirements		There is continuity.
	Inspection result (Is the judging standard satisfied?)	YES	Go to step 5.
		NO	Modify harness.

Step 5	Inspection items		Inspection of harness between engine electronic control unit and controller area network resistor (LOW)
	Maintenance item		Check circuit between controller area network resistor connector terminal No. 2 and engine electronic control unit connector (GF32A) terminal No. 18.
	Inspection condition		Disconnect each device from harness and measure from connection side of harness connector.
	Requirements		There is continuity.
	Inspection result (Is the judging standard satisfied?)	YES	Go to step 6.
		NO	Modify harness.

Step 6	Inspection items		Inspection of engine electronic control unit connector
	Maintenance item		Inspection of connector
	Inspection condition		–
	Requirements		• Connector is properly connected. • No trace of water entry is found. • No corrosion is found in terminal. • Connection to terminal is appropriate.
	Inspection result (Is the judging standard satisfied?)	YES	Go to step 7.
		NO	Modify connector.

Step 7	Inspection items		Inspection of harness between electronic drive unit and controller area network resistor (HIGH)
	Maintenance item		Check circuit between controller area network resistor connector terminal No. 1 and electronic drive unit connector terminal No. 15.
	Inspection condition		Disconnect each device from harness and measure from connection side of harness connector.
	Requirements		There is continuity.
	Inspection result (Is the judging standard satisfied?)	YES	Go to step 8.
		NO	Modify harness.

Step 8	Inspection items		Inspection of harness between electronic drive unit and controller area network resistor (LOW)
	Maintenance item		Check circuit between controller area network resistor connector terminal No. 2 and electronic drive unit connector terminal No. 16.
	Inspection condition		Disconnect each device from harness and measure from connection side of harness connector.
	Requirements		There is continuity.
	Inspection result (Is the judging standard satisfied?)	YES	Go to step 9.
		NO	Modify harness.

Step 9	Inspection items		Inspection of electronic drive unit connector
	Maintenance item		Inspection of connector
	Inspection condition		–
	Requirements		• Connector is properly connected. • No trace of water entry is found. • No corrosion is found in terminal. • Connection to terminal is appropriate.
	Inspection result (Is the judging standard satisfied?)	YES	Replace the engine electronic control unit as well if this diagnosis code occurs after the replacement of one of electronic drive unit.
		NO	Modify connector.

[Fault code]
Diagnosis code: U0029/Flash code: –
[Monitor]
Abnormality in controller area network 1 communication (electronic control unit)
[Fault (outline)]
Controller area network bus OFF
[Diagnosis check]
- Controller area network communication 1 between engine electronic control unit and each electronic control unit is monitored for abnormality.

[Code generation condition]
- Controller area network communication remains disabled for 0.2 second even after 3 seconds of starter switch ON. (Warning lamp is lit and diagnosis code is displayed on first establishment of code generation condition.)

[Diagnosis check timing]
- When code generation condition is established after starter switch ON

[Diagnostic requirement]
- 3 seconds passed after starter switch ON

[Control effected by electronic control unit during fault]
- Effects no special control.

[Probable cause of trouble]
- Open-circuit or short-circuit of controller area network communication harness between engine electronic control unit and multifunction vehicle control unit
- Abnormality of each connector
- Abnormality of engine electronic control unit
- Abnormality of multifunction vehicle control unit
- Abnormality of controller area network resistor in engine electronic control unit
- Abnormality of controller area network resistor

[Recoverability]
<Control during fault>
- Recovered if signal becomes normal with starter switch in ON position.

<Warning lamp>
- Extinguished at 4th driving cycle after normal signal is input.

<Fault code>
- Automatically cleared at 40th warm up cycle after warning lamp is extinguished.
  (To clear as desired, erase from the memory.)

Driving cycle : “Starter switch ON to start engine till starter switch OFF” constitutes 1 driving cycle.
Warm up cycle : “Starter switch ON to start engine till starter switch OFF after coolant temperature increased and engine warmed up” constitutes 1 warm up cycle.

[Electronic Control Unit Connection Diagram]

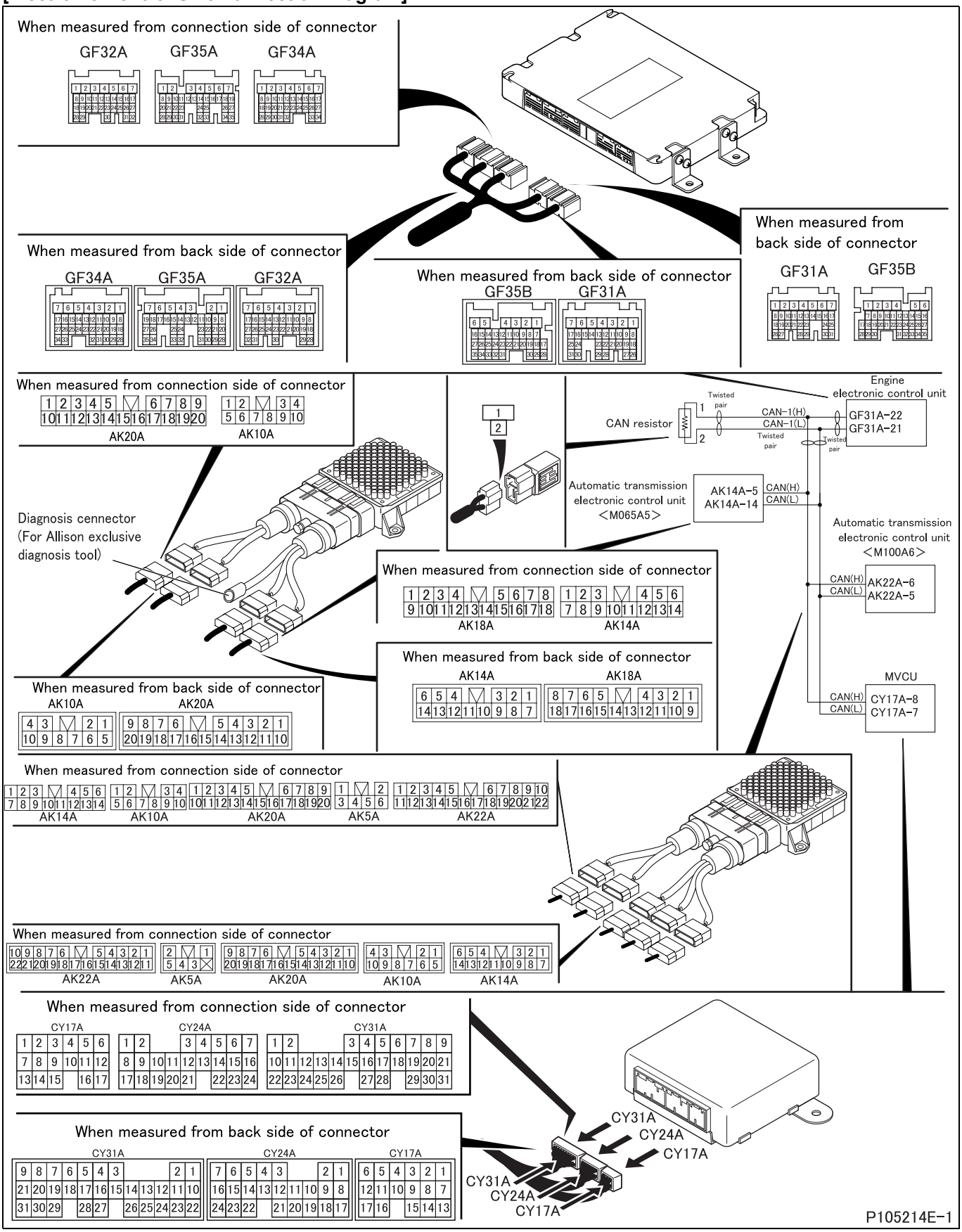

[Parts Identification and Location]

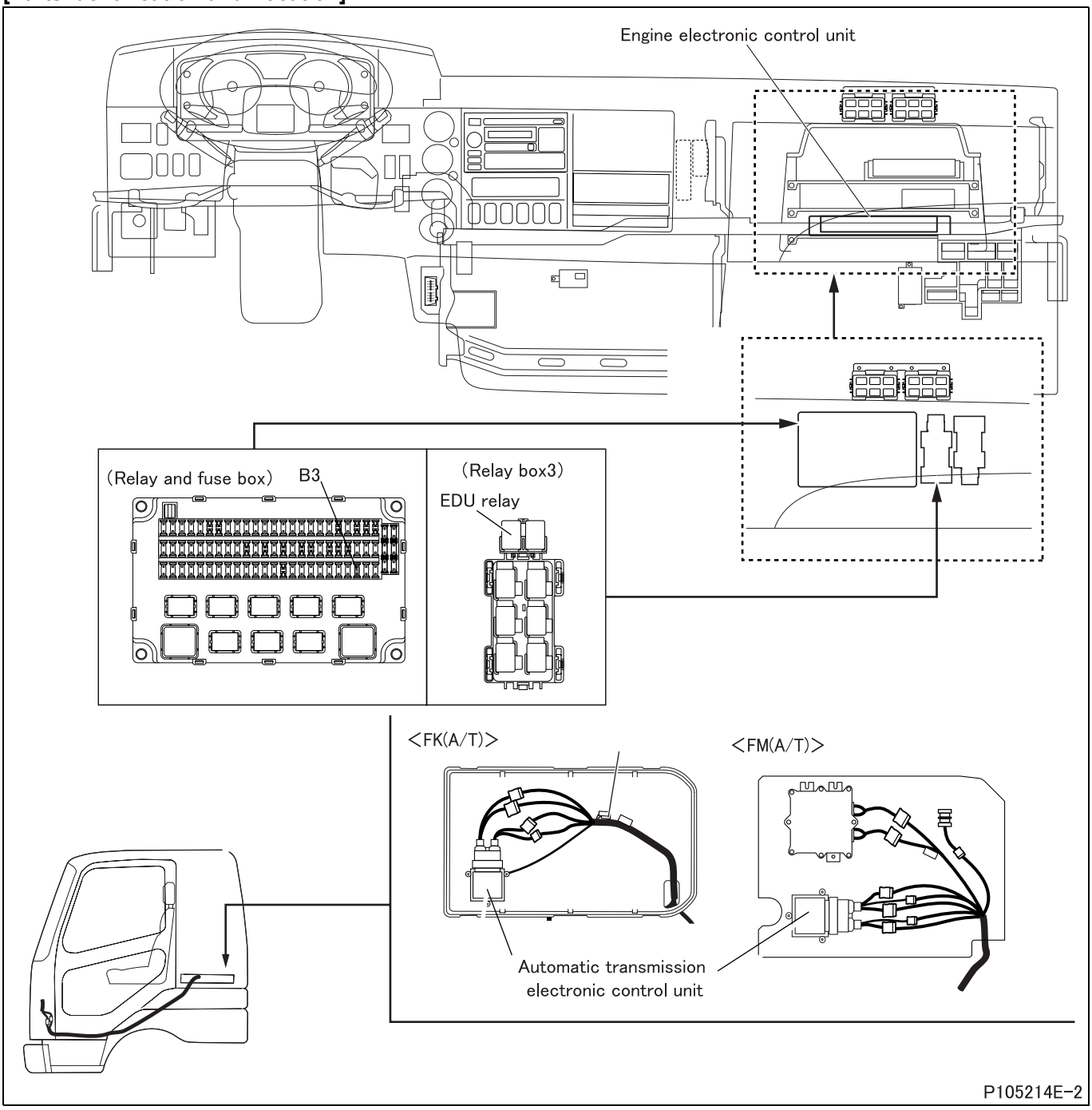

[Fault diagnosis]

- Perform checks in the sequence of the following steps.

Step 1	Inspection items		Inspection by engine electronic control unit connector
	Maintenance item		Measure value of resistance between engine electronic control unit connector (GF31A) terminal No. 21 and 22.
	Inspection condition		Disconnect each device from harness and measure from connection side of harness connector.
	Requirements		120 ± 6 Ω
	Inspection result (Is the judging standard satisfied?)	YES	Go to step 7.
		NO	Go to step 2.

Step 2	Inspection items		Inspection of controller area network resistor connector
	Maintenance item		Inspection of connector
	Inspection condition		–
	Requirements		• Connector is properly connected. • No trace of water entry is found. • No corrosion is found in terminal. • Connection to terminal is appropriate.
	Inspection result (Is the judging standard satisfied?)	YES	Go to step 3.
		NO	Modify connector.

Step 3	Inspection items		Inspection of controller area network resistor unit
	Maintenance item		Measure value of resistance between connector terminal No. 1 and No. 2.
	Inspection condition		Disconnect connector and measure resistor side.
	Requirements		120 ± 6 Ω
	Inspection result (Is the judging standard satisfied?)	YES	Go to step 4.
		NO	Replacement of controller area network resistor

<Step 3 inspection diagram>

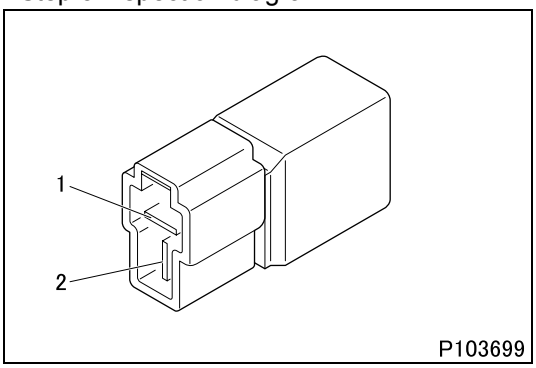

Step 4	Inspection items		Inspection of harness between engine electronic control unit and controller area network resistor (HIGH)
	Maintenance item		Check circuit between controller area network resistor connector terminal No. 1 and engine electronic control unit connector (GF31A) terminal No. 22.
	Inspection condition		Disconnect each device from harness and measure from connection side of harness connector.
	Requirements		There is continuity.
	Inspection result (Is the judging standard satisfied?)	YES	Go to step 5.
		NO	Modify harness.

Step 5	Inspection items		Inspection of harness between engine electronic control unit and controller area network resistor (LOW)
	Maintenance item		Check circuit between controller area network resistor connector terminal No. 2 and engine electronic control unit connector (GF31A) terminal No. 21.
	Inspection condition		Disconnect each device from harness and measure from connection side of harness connector.
	Requirements		There is continuity.
	Inspection result (Is the judging standard satisfied?)	YES	Go to step 6.
		NO	Modify harness.

Step 6	Inspection items		Inspection of engine electronic control unit connector
	Maintenance item		Inspection of connector
	Inspection condition		–
	Requirements		• Connector is properly connected. • No trace of water entry is found. • No corrosion is found in terminal. • Connection to terminal is appropriate.
	Inspection result (Is the judging standard satisfied?)	YES	Go to step 7.
		NO	Modify connector.

Step 7	Inspection items		Inspection of harness between multifunction vehicle control unit and controller area network resistor (HIGH)
	Maintenance item		Check circuit between controller area network resistor connector terminal No. 1 and multifunction vehicle control unit connector (CY17A) terminal No. 8.
	Inspection condition		Disconnect each device from harness and measure from connection side of harness connector.
	Requirements		There is continuity.
	Inspection result (Is the judging standard satisfied?)	YES	Go to step 8.
		NO	Modify harness.

Step 8	Inspection items		Inspection of harness between multifunction vehicle control unit and controller area network resistor (LOW)
	Maintenance item		Check circuit between controller area network resistor connector terminal No. 2 and multifunction vehicle control unit connector (CY17A) terminal No. 7.
	Inspection condition		Disconnect each device from harness and measure from connection side of harness connector.
	Requirements		There is continuity.
	Inspection result (Is the judging standard satisfied?)	YES	Go to step 9.
		NO	Modify harness.

Step 9	Inspection items		Inspection of multifunction vehicle control unit connector
	Maintenance item		Inspection of connector
	Inspection condition		–
	Requirements		• Connector is properly connected. • No trace of water entry is found. • No corrosion is found in terminal. • Connection to terminal is appropriate.
	Inspection result (Is the judging standard satisfied?)	YES	Go to step 10.
		NO	Modify connector.

Step 10	Inspection items		Inspection of harness between automatic transmission electronic control unit and controller area network resistor (HIGH)
	Maintenance item		Check circuit between the following connector terminals M065A5: controller area network resistor connector terminal No. 1 and automatic transmission electronic control unit connector (AK14A) terminal No. 5 M100A6: controller area network resistor connector terminal No. 1 and automatic transmission electronic control unit connector (AK22A) terminal No. 6
	Inspection condition		Disconnect each device from harness and measure from connection side of harness connector.
	Requirements		There is continuity.
	Inspection result (Is the judging standard satisfied?)	YES	Go to step 11.
		NO	Modify harness.

Step 11	Inspection items		Inspection of harness between automatic transmission electronic control unit and controller area network resistor (LOW)
	Maintenance item		Check circuit between the following connector terminals M065A5: controller area network resistor connector terminal No. 2 and automatic transmission electronic control unit connector (AK14A) terminal No. 14 M100A6: controller area network resistor connector terminal No. 2 and automatic transmission electronic control unit connector (AK22A) terminal No. 5
	Inspection condition		Disconnect each device from harness and measure from connection side of harness connector.
	Requirements		There is continuity.
	Inspection result (Is the judging standard satisfied?)	YES	Go to step 12.
		NO	Modify harness.

Step 12	Inspection items		Inspection of automatic transmission electronic control unit connector
	Maintenance item		Inspection of connector
	Inspection condition		–
	Requirements		• Connector is properly connected. • No trace of water entry is found. • No corrosion is found in terminal. • Connection to terminal is appropriate.
	Inspection result (Is the judging standard satisfied?)	YES	Replace the engine electronic control unit as well if this diagnosis code occurs after the replacement of either multifunction vehicle control unit or automatic transmission electronic control unit.
		NO	Modify connector.

4. Multi-Use Tester Service Data

NOTE

- **It is possible to see service data and actuator tests simultaneously.**

No.	Item	Data	Inspection condition	Requirement
01	Engine Revolution	■■■.r/min	Idling	Approx. 600 rpm
			Racing (engine running)	Changes in sync with the tachometer reading
02	Reference Injection Quantity	■■■. ■%	Starter switch ON	0%
05	Gas-flow Resistance of Filter	■■■. ■	High idle	0 to 0.085
07	Reference Common Rail Pressure	■■■. ■%	Starter switch ON	0%
09	Actual Common Rail Pressure	■■■. ■%	Starter switch ON	0%
0A	EGR Reference Position	■■■. ■%	–	0 to 100%
0C	Difference Common Rail Pressure	■■■. ■%	Idling	0% (The value rises up to approx. 7.5% depending on the vehicle conditions.)
0E	EGR1 Actual Position	■■. ■■%	Perform actuator test	The actuator shall move to a position as indicated in the actuator test.
			[Actuator test] A1: EGR1, 3	
0F	EGR3 Actual Position	■■. ■■%	Perform actuator test	The actuator shall move to a position as indicated in the actuator test.
			[Actuator test] A1: EGR1, 3	
11	Regeneration Interruption Flag	■■■■.	Automatic diesel particulate filter regeneration in progress	0 to 1
			Manual diesel particulate filter regeneration in progress	0 to 1
13	DPF Regeneration Request Value	■■■■.	–	0 to 5
14	2ND Stage Lapse Time	■■■■.min	The elapsed time of diesel particulate filter regeneration (ceramic filter temperature rise controlled) is displayed.	
16	Post Injection Quantity (REG)	■■■. ■	Automatic diesel particulate filter regeneration in progress	Value gradually increases
			Manual diesel particulate filter regeneration in progress	Value gradually increases
1F	Intake Throttle Target Position	■■■■.%	–	0 to 100%
20	Intake Throttle actual position	■■■. ■%	Perform actuator test	The throttle shall move to a position as indicated in the actuator test.
			[Actuator test] A7: Intake throttle1	
21	WG valve reference position	■■■. ■%	Idling	0
22	Accel Pedal Position (unfiltered)	■■■. ■%	Accelerator pedal not pressed	0%
			Accelerator pedal gradually pressed	Value gradually increases
			Accelerator pedal fully pressed	100%
23	Accel Pedal Position (filtered)	■■■. ■%	Accelerator pedal not pressed	0%
			Accelerator pedal gradually pressed	Value gradually increases
			Accelerator pedal fully pressed	100%
24	Accel Pedal Sensor Voltage 1	■. ■■■V	Accelerator pedal gradually pressed from released position	0.85 to 4.15 V
25	Accel Pedal Sensor Voltage 2	■. ■■■V	Accelerator pedal gradually pressed from released position	0.85 to 4.15 V
26	Boost Pressure	■■■. ■psi	Engine speed: 3210 rpm	28 psi

No.	Item	Data	Inspection condition	Requirement
27	Intake Air Temperature	■■■. ■°F	Engine cold	Value corresponds to ambient temperature
28	Intake Air Temperature (EGR)	■■■. ■°F	Engine cold	Value corresponds to ambient temperature
29	DPF Temperature 1 (inlet)	■■■■. °F	Engine in process of warming up	Value gradually increases
30	DPF Temperature 2 (outlet)	■■■■. °F	Engine in process of warming up	Value gradually increases
32	DPF relative pressure	■■■. ■psi	Engine is started.	Value gradually increases
33	Exhaust gas pressure	■■■. ■psi	Accelerator pedal pressed	Value gradually increases
35	Water Temperature	■■■. ■°F	Engine cold	Value corresponds to ambient temperature
			Engine in process of warming up	Value gradually increases
			Engine stopped after warming up	Value gradually decreases
36	Fuel Temperature (inlet)	■■■. ■°F	Engine cold	Value corresponds to ambient temperature
			Engine in process of warming up	Value gradually increases
			Engine stopped after warming up	Value gradually decreases
37	Fuel Temperature (leak)	■■■. ■°F	Engine cold	Value corresponds to ambient temperature
			Engine in process of warming up	Value gradually increases
			Engine stopped after warming up	Value gradually decreases
38	Atmospheric Pressure	■■■. ■psi	Altitude: 0 m {0 ft.}	14.6 psi
			Altitude: 600 m {1,970 ft.}	13.8 psi
3A	Air Flow Sensor Output	■■■■.g/hr	Accelerator pedal gradually pressed	Value gradually increases
3C	Vehicle Speed	■■■■.mph	Vehicle in motion	Value corresponds to speedometer indication
3E	Q Adjustment Resistor No.	1/2/3/4/5/6/7/8/9/10/11/NON	–	–
3F	PTO Accel Position	■■■. ■%	Power take-off is operated (MIN-MAX)	0 to 100%
40	PTO Accel Sensor Voltage	■. ■■■V	Power take-off is operated (MIN-MAX)	1.0 to 3.0 V
42	Power Supply Voltage	■■. ■■V	Starter switch ON	Value matches battery voltage
43	Reference Regeneration Time	■■■■.min	Automatic diesel particulate filter regeneration in progress	0 to 10
			Manual diesel particulate filter regeneration in progress	0 to 10
44	Reference Oxygen Flow Quantity	■■■■.kg	During diesel particulate filter regeneration	0 to 10
45	Oxygen Accumulation Value	■■■■.kg	During diesel particulate filter regeneration	Valve gradually increases
46	Exhaust Gas Flow	■■■■.m^3/h	Accelerator pedal gradually pressed	Valve gradually increases
47	Regeneration Duration	■■■■.min	Duration time during diesel particulate filter regeneration is displayed.	Valve gradually increases
49	Auto Cruise Reference Speed	■■■■.mph	During driving with auto cruise control ON	Value corresponds to auto cruise set speed
4A	Speed Limiter Reference Speed	■■■■.mph	Vehicle speed limited	Value is same as vehicle speed during vehicle speed restriction
4D	Driving Mode (Injection)	■■■■.	–	0 to 5
4E	Driving Mode (Exhaust Brake)	■■■■.	–	0 to 5
4F	Driving Mode (Intake Throttle)	■■■■.	–	0 to 5
50	Driving Mode (EGR)	■■■■.	–	0 to 5
51	Driving Mode (W/G)	■■■■.	–	0 to 5

No.	Item	Data	Inspection condition	Requirement
52	Mileage after regeneration	■■■■.km	Mileage after the completion of diesel particulate filter regeneration is displayed.	Value gradually increases
53	Driving time after regeneration	■■■■.h	Driving time after the completion of diesel particulate filter regeneration is displayed.	Value gradually increases
54	Injection Quantity after reg.	■■■■.kg	Automatic diesel particulate filter regeneration has been completed.	Value gradually increases
			Manual diesel particulate filter regeneration has been completed.	Value gradually increases
55	Average Vehicle Speed after reg.	■■■■.mph	Average vehicle speed after the completion of diesel particulate filter regeneration is displayed.	
58	Exhaust Gas Temperature	■■■■.°F	Engine warm-up is in progress.	Value gradually increases
5A	Pump Adjustment State	It is adjusting/ Temporary end/ Complete end/ It's readjusting/ Unadjusting	–	Either of the idling, main learning, temporary learning end, main learning end, or relearning state
5B	Pump Adjustment Value (Last Time)	■■■. ■mA	Engine idling	–200 to + 200 mA
5C	Pump Adjustment Value (This Time)	■■■. ■mA	Engine idling	–200 to + 200 mA
5D	Reg. Control Code (Final)	■■■■.	During diesel particulate filter regeneration	0 to 10
5E	Reg. Control Code (Temporary) 1	■■■■.	During diesel particulate filter regeneration	0 to 10
5F	Reg. Control Code (Temporary) 2	■■■■.	During diesel particulate filter regeneration	0 to 10
61	Flow Damper (#1)	■■■■.	Starter switch ON	0
62	Flow Damper (#2)	■■■■.	Starter switch ON	0
63	Flow Damper (#3)	■■■■.	Starter switch ON	0
64	Flow Damper (#4)	■■■■.	Starter switch ON	0
65	Flow Damper (#5)	■■■■.	Starter switch ON	0
66	Flow Damper (#6)	■■■■.	Starter switch ON	0
67	DPF Related Information	Memory/No memory	Resetting the diesel particulate filter related data has not been performed after the ceramic filter is replaced or cleaned.	The data shall remain in memory.
			Resetting the diesel particulate filter related data has been performed after the ceramic filter is replaced or cleaned.	The data shall not remain in memory.
71	Starter SW (S)	ON/OFF	Engine cranked by means of starter switch	ON
			Starter switch in position except START	OFF
72	Starter SW (M)	ON/OFF	Starter switch in ON position	ON
			Starter switch in position except ON	OFF
73	Accel SW	ON/OFF	Accelerator pedal not pressed	ON
			Accelerator pedal pressed	OFF
74	Brake SW	ON/OFF	Brake pedal pressed	ON
			Brake pedal not pressed	OFF

No.	Item	Data	Inspection condition	Requirement
75	DPF SW	ON/OFF	Diesel particulate filter cleaning switch ON	ON
			Diesel particulate filter cleaning switch OFF	OFF
			[Actuator test] A5: DPF Regeneration (Manual)	
76	Auxiliary Brake SW 1	ON/OFF	Exhaust brake switch ON	ON
			Exhaust brake switch OFF	OFF
78	Clutch SW	ON/OFF	Clutch pedal not pressed	ON
			Clutch pedal pressed	OFF
7A	Neutral SW	ON/OFF	Transmission in neutral	ON
			Transmission not in neutral	OFF
7B	Idle Up Cancel SW	ON/OFF	12 V applied (on automatic transmission vehicles, shift lever in R, D, 2 or L position)	ON
			12 V not applied (on automatic transmission vehicles, shift lever in N position)	OFF (on manual transmission vehicles, no connection is made to idle up cancel terminal.)
7C	Air Conditioner SW 1	ON/OFF	Air conditioner compressor running	ON
			Air conditioner compressor not running	OFF
7F	Torque Cut SW	ON/OFF	Transmission in 1st or reverse	ON
			Transmission not in 1st or reverse	OFF
82	PTO SW	ON/OFF	Switch ON	ON
			Switch OFF	OFF
83	Diagnosis SW	ON/OFF	Diagnosis switch OFF	ON
			Diagnosis switch ON	OFF
86	Auxiliary Brake Cut SW	ON/OFF	Anytime	ON
87	Auxiliary Brake M/V 1	ON/OFF	Exhaust brake operating (butterfly valve fully closes.)	ON
			Except above conditions	OFF
			[Actuator test] AC: Auxiliary Brake M/V1	
88	Exhaust M/V	ON/OFF	Diesel particulate filter regeneration in progress (butterfly valve closes halfway)	ON
			Except above conditions	OFF
			[Actuator test] AB: Exhaust Brake M/V1 + M/V2	
8C	Auxiliary Brake Indicator Lamp	ON/OFF	Exhaust brake operating	ON
			Exhaust brake not operating	OFF
			[Actuator test] AE: Auxiliary Brake Indicator Lamp	
8D	Glow Relay	ON/OFF	Perform actuator test	ON
			Actuator test not performed	OFF
			[Actuator test] AF: Relay for Glow Relay	
8E	Glow Relay Indicator Lamp	ON/OFF	Preheater in operation	ON
			Preheater not in operation	OFF
			[Actuator test] B0: Glow Indicator Lamp	
8F	Starter Safety Relay	ON/OFF	Engine starting is not inhibited	ON
			Engine starting is inhibited	OFF
			[Actuator test] B1: Starter Safety Relay	
90	EDU Relay	ON/OFF	Starter switch ON	ON
			Starter switch OFF	OFF
			[Actuator test] A9: EDU Relay	

No.	Item	Data	Inspection condition	Requirement
91	MIL Lamp	ON/OFF	Starter switch ON (engine not started)	ON
			No error after engine startup	OFF
			[Actuator test] B3: MIL Lamp	
92	Diagnosis Lamp	ON/OFF	Starter switch ON (engine not started)	ON
			No error after engine startup	OFF
			[Actuator test] B4: Diagnosis Lamp	
93	DPF Lamp	ON/OFF	Manual diesel particulate filter regeneration in progress	ON
			Except above conditions	OFF
			[Actuator test] A8: DPF Lamp	
94	W/G M/V	ON/OFF	Manual diesel particulate filter regeneration in progress	ON
			Except above conditions	OFF
			[Actuator test] A3: W/G M/V	

5. Actuator Tests Performed Using Multi-Use Tester

NOTE

- **It is possible to see service data and actuator tests simultaneously.**

No.	Item	Explanation	Confirmation method
A1	EGR1, 3	Hold the exhaust gas recirculation valves 1 and 3 in a position as displayed in the Multi-Use Tester. [Can be executed under the following conditions] • Vehicle: stopped (vehicle speed 0 km/h {0 MPH}) • Starter switch: ON • Engine: stopped	The target values as indicated in the actuator test agree with the actual position of the service data. [Service data] 0E: EGR1 Actual Position 0F: EGR3 Actual Position
A3	W/G M/V	Switch ON/OFF waste gate magnetic valve [Can be executed under the following conditions] • Vehicle: stopped (vehicle speed 0 km/h {0 MPH}) • Starter switch: ON • Transmission: neutral • Engine: idling	Operating sound of waste gate magnetic valve when turned ON/OFF [Service data] 94: W/G M/V
A5	DPF Regeneration (Manual)	Send out the manual diesel particulate filter regeneration request. [Can be executed under the following conditions] • Vehicle: stopped (vehicle speed 0 km/h {0 MPH}) • Starter switch: ON (engine starts) • Transmission: neutral • Parking brake: engaged (parking brake switch: ON) • The warm-up ends.	Check to see that the diesel particulate filter warning lamp blinks. The manual diesel particulate filter regeneration starts and engine speed increases when the diesel particulate filter warning switch is turned on. [Service data] 75: DPF SW
A7	Intake throttle 1	Hold the intake throttle in a position as displayed in the Multi-Use Tester. [Can be executed under the following conditions] • Vehicle: stopped (vehicle speed 0 km/h {0 MPH}) • Starter switch: ON • Engine: stopped	The target values as indicated in the actuator test agree with the actual position of the service data. [Service data] 20: Intake Throttle actual position
A8	DPF Lamp	Switch ON/OFF diesel particulate filter warning lamp [Can be executed under the following conditions] • Vehicle: stopped (vehicle speed 0 km/h {0 MPH}) • Starter switch: ON • Transmission: neutral • Engine: idling	ON/OFF condition of diesel particulate filter warning lamp [Service data] 93: DPF Lamp
A9	EDU Relay	Switch ON/OFF electronic drive unit relay [Can be executed under the following conditions] • Vehicle: stopped (vehicle speed 0 km/h {0 MPH}) • Starter switch: ON • Transmission: neutral • Engine: stopped	Operating sound of electronic drive unit relay when turned ON/OFF [Service data] 90: EDU Relay
AB	Exhaust Brake M/V1 + M/V2	Switch ON/OFF exhaust shutter 3-way magnetic valve 1, 2 [Can be executed under the following conditions] • Vehicle: stopped (vehicle speed 0 km/h {0 MPH}) • Starter switch: ON • Transmission: neutral • Engine: stopped	Operating sound of exhaust shutter 3-way magnetic valve 1, 2 when turned ON/OFF [Service data] 88: Exhaust M/V

No.	Item	Explanation	Confirmation method
AC	Auxiliary Brake M/V 1	Switch ON/OFF exhaust shutter 3-way magnetic valve 1 [Can be executed under the following conditions] • Vehicle: stopped (vehicle speed 0 km/h {0 MPH}) • Starter switch: ON • Transmission: neutral • Engine: stopped	Operating sound of exhaust shutter 3-way magnetic valve 1 when turned ON/OFF [Service data] 87: Auxiliary Brake M/V 1
AE	Auxiliary Brake Indicator Lamp	Switch ON/OFF exhaust shutter indicator lamp [Can be executed under the following conditions] • Vehicle: stopped (vehicle speed 0 km/h {0 MPH}) • Starter switch: ON • Transmission: neutral • Engine: stopped	ON/OFF condition of indicator lamp [Service data] 8C: Auxiliary Brake Indicator Lamp
AF	Relay for Glow Relay	ON/OFF switchover of glow drive relay [Can be executed under the following conditions] • Vehicle: stationary (vehicle speed 0 km/h {0 MPH}) • Starter switch: ON • Engine: stopped	Relay operating sound [Service data] 8D: Glow Relay
B0	Glow Indicator Lamp	Glow indicator lamp driving signal [Can be executed under the following conditions] • Vehicle: stationary (vehicle speed 0 km/h {0 MPH}) • Starter switch: ON • Engine: stopped	Check that indicator lamp is turned ON/OFF [Service data] 8E: Glow Relay Indicator Lamp
B1	Starter Safety Relay	ON/OFF switchover of starter continuous power-on preventive relay (safety relay) [Can be executed under the following conditions] • Vehicle: stationary (vehicle speed 0 km/h {0 MPH}) • Starter switch: ON • Engine: stopped	Relay operating sound [Service data] 8F: Starter Safety Relay
B3	MIL Lamp	Switch ON/OFF engine warning lamp (orange) [Can be executed under the following conditions] • Vehicle: stopped (vehicle speed 0 km/h {0 MPH}) • Starter switch: ON • Engine: stopped	ON/OFF condition of warning lamp (orange) [Service data] 91: MIL Lamp
B4	Diagnosis Lamp	Switch ON/OFF engine warning lamp (red) [Can be executed under the following conditions] • Vehicle: stopped (vehicle speed 0 km/h {0 MPH}) • Starter switch: ON • Engine: stopped	ON/OFF condition of warning lamp (red) [Service data] 92: Diagnosis Lamp
B6	Air Conditioner SW1	Switch to air conditioner operation condition (idling up control) [Can be executed under the following conditions] • Vehicle: stopped (vehicle speed 0 km/h {0 MPH}) • Transmission: neutral • Engine: idling	Increase/decrease of engine RPM [Service data] 7C: Air Conditioner SW1
B8	Idle Up Cancel SW	Switch to idle up cancel condition [Can be executed under the following conditions] • Vehicle: stopped (vehicle speed 0 km/h {0 MPH}) • Transmission: neutral	Idling speed low idle [Service data] 7B: Idle Up Cancel SW

No.	Item	Explanation	Confirmation method
B9	Fuel Leak Check	Increase rail pressure for a specified period of time [Can be executed under the following conditions] • Vehicle: stopped (vehicle speed 0 km/h {0 MPH}) • Transmission: neutral • Diagnosis switch: OFF (removal of fuse)	Check that no fuel leaks from fuel system (pipe, hose)
BB	Injector Test 1	Force the selected injector magnetic valve to be deactivated. [Can be executed under the following conditions] • Vehicle: stopped (vehicle speed 0 km/h {0 MPH}) • Transmission: neutral • No present diagnosis codes generated	Injector magnetic valve (No. 1 cylinder) should stop.
BC	Injector Test 2		Injector magnetic valve (No. 5 cylinder) should stop.
BD	Injector Test 3		Injector magnetic valve (No. 3 cylinder) should stop.
BE	Injector Test 4		Injector magnetic valve (No. 6 cylinder) should stop.
BF	Injector Test 5		Injector magnetic valve (No. 2 cylinder) should stop.
C0	Injector Test 6		Injector magnetic valve (No. 4 cylinder) should stop.
C2	Pump Adjustment Value Clear	Delete the compensation information (pump learning condition) in engine electronic control unit	The service data “4D: Pump Adjustment State” displays “Unlearned”

6. Registration and Alteration of Data in Engine Electronic Control Unit

6.1 Operation at electronic control unit replacement

- Vehicle information and equipment specifications are registered in each engine electronic control unit as coded data (coding data).
- Given in the chart below are the items on which registered data in the engine electronic control unit are necessary to alter or new data are necessary to register with the disposition of equipment.
- If the electronic control unit is left initialized with no necessary data registered, it is not capable of proper engine control.
- For data alteration/registration and data write operation, contact your nearest MITSUBISHI FUSO dealer or MITSUBISHI FUSO TRUCK OF AMERICA, Inc.

Disposition of equipment \ Engine electronic control unit data		VIN (Vehicle Identification Number)	Injector correction	Injection quantity correction	PTO idling speed	Remarks
Engine electronic control unit	Replaced with new unit	O	O	O	O	
	Relocated from other vehicle	O	O	O	O	
	Erasure of diagnosis codes					No action is required.
Replacement of injector			O			Data code differs from injector to injector and is necessary to change.
Replacement of air flow sensor						Data is not necessary to change if the replacement is identical.
Change of PTO idling speed					O	

O : Denotes the necessity of data being updated or registered.

6.2 Resetting the diesel particulate filter related information (resetting electronic control unit)

- On the regeneration control type as diesel particulate filter system, the engine electronic control unit stores many diesel particulate filter related information to control the diesel particulate filter regeneration as diesel particulate filter history.
- If the ceramic filter is replaced or cleaned without regeneration, reset the history of diesel particulate filter using Multi-Use Tester. (For reset procedure, see Gr15.)
- In the case of diesel particulate filter regeneration by use of the diesel particulate filter cleaning switch, however, history reset with a Multi-Use Tester is not required because the history is automatically reset by engine electronic control unit.

7. Initialization of Supply Pump Unit Difference Learning Value in Engine Electronic Control Unit

Following replacement of the supply pump, this item is used to erase the adjustment value (learning value) in the engine electronic control unit and program the current supply pump data into the engine electronic control unit.
Also following replacement of the engine electronic control unit with a new one, it is necessary to program in the current supply pump data.

7.1 After replacement of supply pump or replacement (re-use) of engine electronic control unit

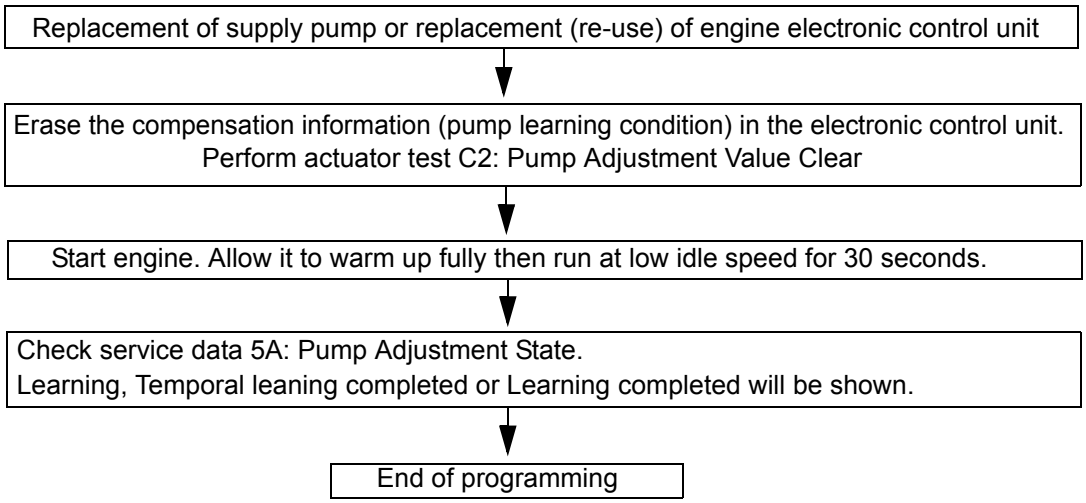

7.2 After replacement of engine electronic unit with new one

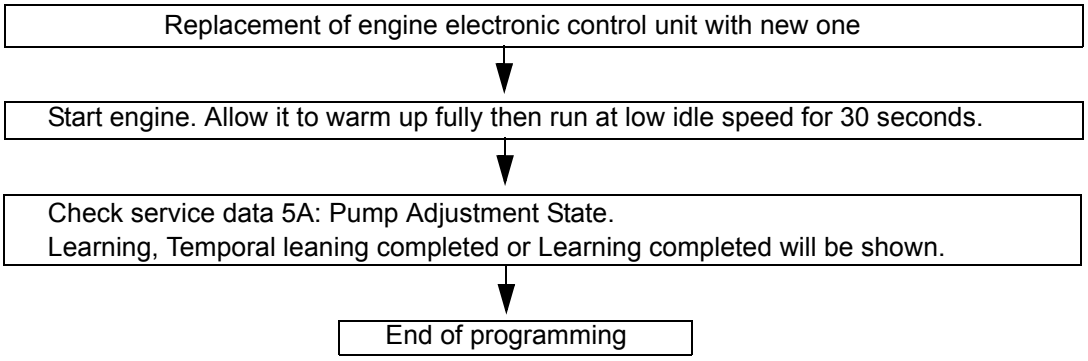

7.3 Check after engine electronic control unit programming

If the measurement values (which show the learning values) shown by service data 5B: Pump Adjustment Value (Last Time) and 5C: Pump Adjustment Value (This Time) are out of specification, a defect in the supply pump or in the engine electronic control unit is conceivable so you must replace the supply pump or engine electronic control unit. (Initialize the engine electronic control unit again after replacing the supply pump or engine electronic control unit.)

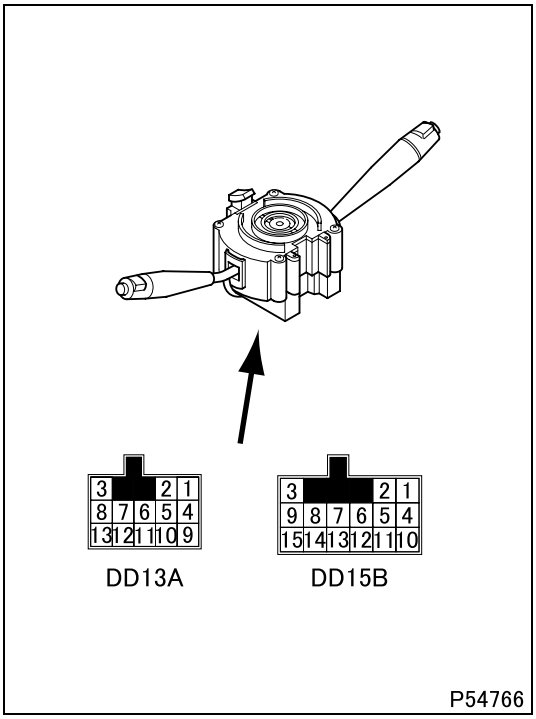

#001 Inspection of combination switch

DD13A connector connection table

Switch position		Terminals with continuity
Exhaust brake switch	OFF	–
	ON	1–4

- If there is any abnormality, replace the switch.

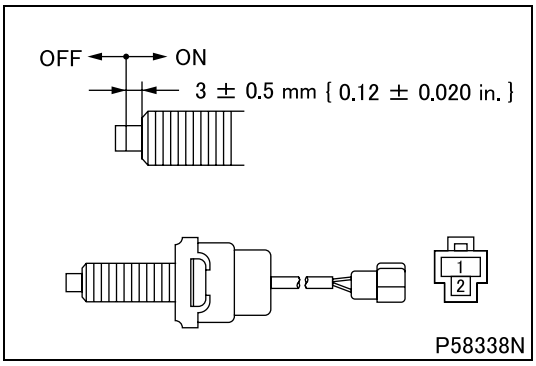

#029 Inspection of accelerator pedal switch

Switch position	Terminals with continuity
OFF	–
ON	1–2

- If there is any abnormality, replace the switch.

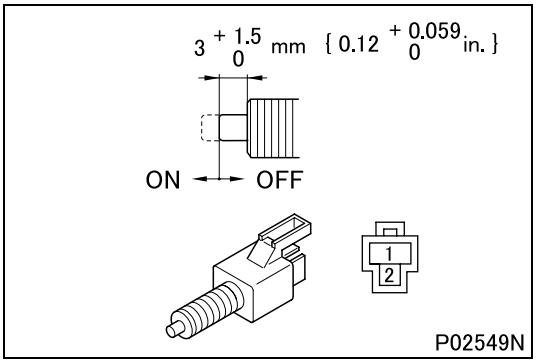

#031 Inspection of clutch switch

Switch position	Terminals with continuity
OFF	–
ON	1–2

- If there is any abnormality, replace the switch.

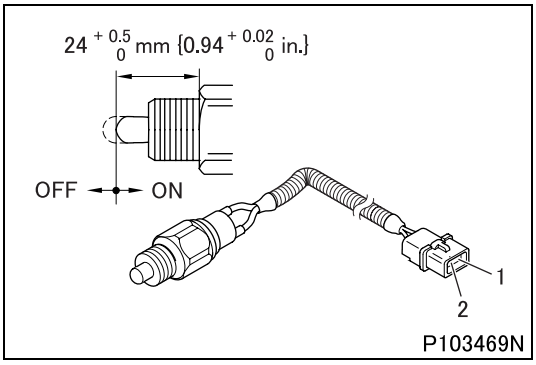

#056 Inspection of transmission neutral switch

Switch position	Terminals with continuity
OFF	–
ON	1–2

- If there is any abnormality, replace the switch.

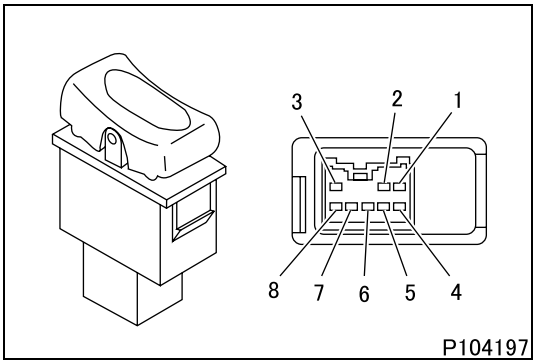

#089 Inspection of DPF cleaning switch

Switch position	Terminals with continuity
–	7–2
ON	7–8

- If there is any abnormality, replace the switch.

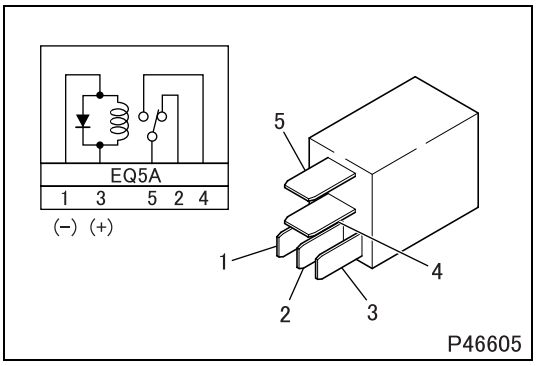

#182 Inspection of relay (normally open type with 6 pins)

- Test for continuity and proper operation. If there is any abnormality, replace the relay.

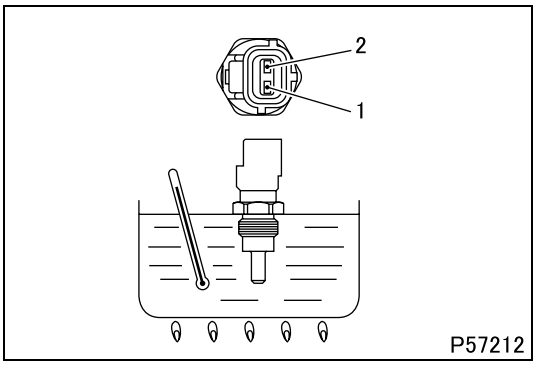

#262 Inspection of water temperature sensor

- Place the water temperature sensor in a container filled with engine oil.
- Heat the oil to each of the specified temperatures. Stir the oil well while doing so.
- Measure the resistance between terminals 1 and 2.

Standard value	20°C {68°F}	2.45 ± 0.14 kΩ
	80°C {176°F}	0.32 kΩ (reference value)
	110°C {230°F}	147.1 ± 2 Ω

- If either measurement is out of specification, replace the sensor.

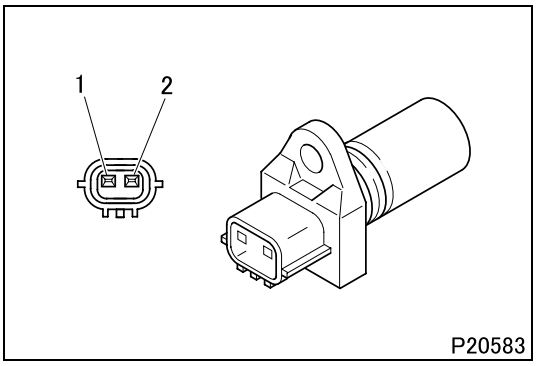

#263 Inspection of engine speed sensor

- Measure the resistance between terminals 1 and 2.

Standard value (at 20°C {68°F})	125.5 ± 17 Ω

- If the measurement is out of specification, replace the sensor.

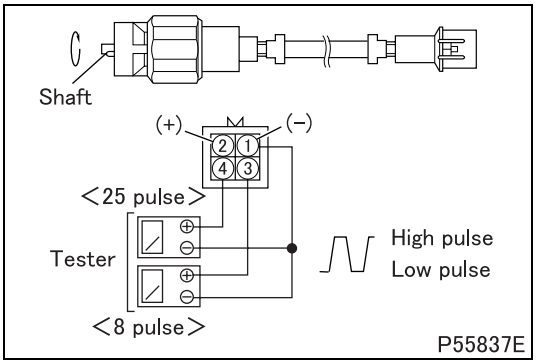

#265 Inspection of vehicle speed sensor

- With the battery voltage applied to terminals 1 and 2, slowly turn the shaft of the sensor.
- Measure the maximum voltage (high pulse voltage) and minimum voltage (low pulse voltage) occurring at each specified pair of terminals.

Terminals	Inspection condition	Standard value
8-pulse output: terminals 1 and 3	Low pulse voltage	1.5 V or lower
	High pulse voltage	23.5 V or more
25-pulse output: terminals 1 and 4	Low pulse voltage	0.5 V or lower
	High pulse voltage	8 ± 1 V

- If any measurement is out of specification, replace the sensor.

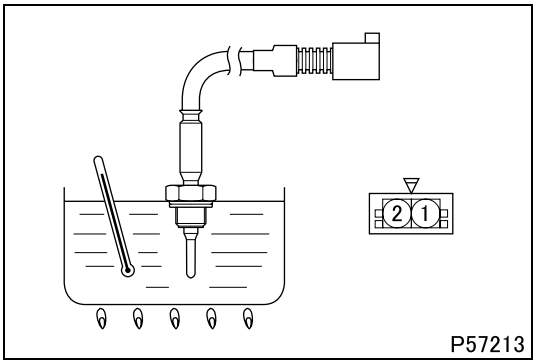

#305 Inspection of intake air temperature sensor

<Intake air temperature sensor 1>

- The intake air temperature sensor 1 may output false signals if its tip is contaminated. Clean it if necessary. (See Gr15.)
- Place the sensor in a container filled with engine oil.
- Heat the oil to each of the specified temperatures. Stir the oil well while doing so.
- Measure the resistance between terminals 1 and 2.

Standard value	50°C {122°F}	$2.202\ ^{+0.233}_{-0.208}$ kΩ
	100°C {212°F}	$508.1\ ^{+41.3}_{-37.7}$ Ω
	150°C {302°F}	$160.4\ ^{+10.3}_{-9.6}$ Ω

- If either measurement is out of specification, replace the sensor.

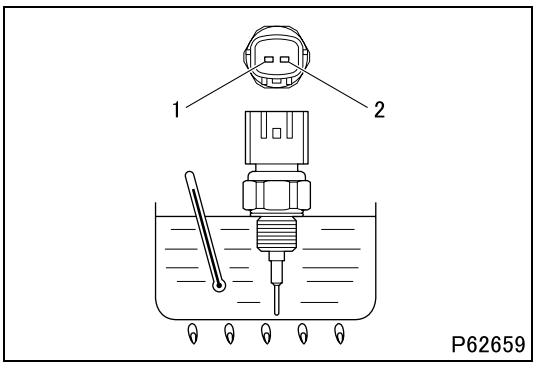

<Intake air temperature sensor 2>

- The intake air temperature sensor 2 may output false signals if its tip is contaminated. Clean it if necessary. (See Gr15.)
- Place the sensor in a container filled with engine oil.
- Heat the oil to each of the specified temperatures. Stir the oil well while doing so.
- Measure the resistance between terminals 1 and 2.

Standard value	0°C {32°F}	$162.3\ ^{+48.8}_{-36.5}$ kΩ
	20°C {68°F}	$61.47\ ^{+15.99}_{-12.35}$ kΩ
	80°C {176°F}	$6.120\ ^{+1.095}_{-0.907}$ kΩ

- If the measurement is out of specification, replace the sensor.

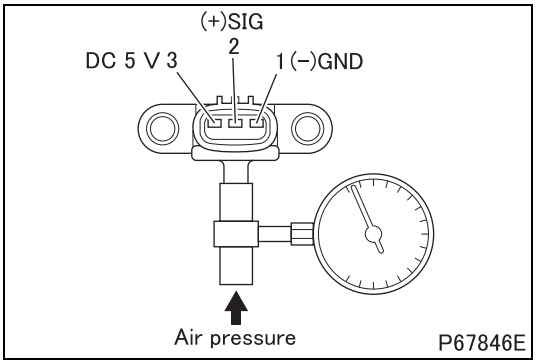

#318 Inspection of boost pressure sensor

- Apply DC 5 V to terminals 3 and 1.
- Apply air pressure. Gradually increase it and, while doing so, measure the output voltage occurring at terminals 2 and 1 (see the diagram on the left).

	Air pressure (gauge pressure)	Voltage
Standard value	101.67 kPa {15 psi, 1.0 kgf/cm^2}	Approx. 3.2 V
	165.67 kPa {24 psi, 1.7 kgf/cm^2}	Approx. 4.5 V

- If any measurement is out of specification, replace the sensor.

#319 Inspection of common rail pressure sensor

- The sensor cannot easily be inspected in isolation, so you must evaluate it indirectly by inspection of system harnesses and related parts.
- If there is no abnormality in any related part but the system is abnormal, replace the common rail pressure sensor.

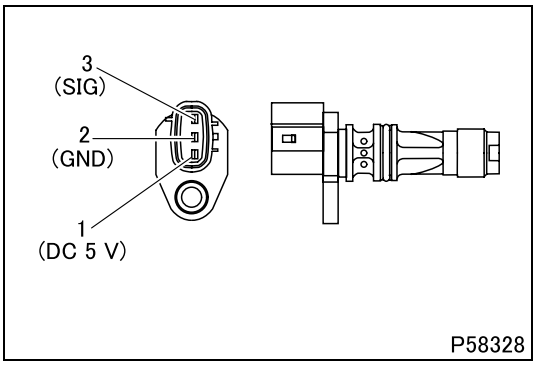

#320 Inspection of cylinder recognition sensor

- Measure the resistance between terminals 1 and 2. (The resistance serves as a rough indication only. A pulse output monitor is needed for confirmation of functionality.)

Standard value	200 to 1800 Ω

- If the measurement is out of specification, replace the sensor.

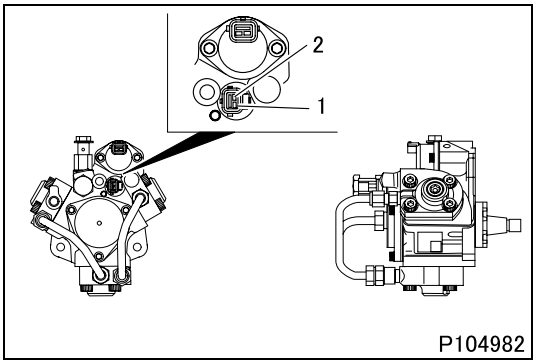

#323 Inspection of fuel temperature sensor

<Fuel temperature sensor 1>

- Measure the resistance between terminals 1 and 2.

Standard value	–20°C {–4°F}	15.0 ± 1.5 kΩ
	20°C {68°F}	2.45 ± 0.24 kΩ
	80°C {176°F}	0.318 ± 0.008 kΩ

- If any measurement is out of specification, replace the supply pump.

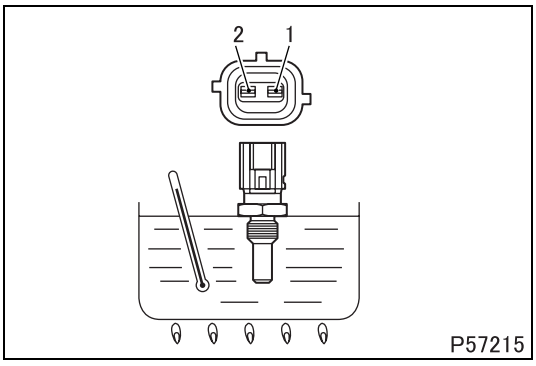

<Fuel temperature sensor 2>

- Measure the resistance between terminals 1 and 2.

Standard value	20°C {68°F}	$2.45^{+0.14}_{-0.13}$ kΩ
	80°C {176°F}	0.318 ± 0.01 kΩ
	110°C {230°F}	0.1417 ± 0.0018 kΩ

- If any measurement is out of specification, replace the sensor.

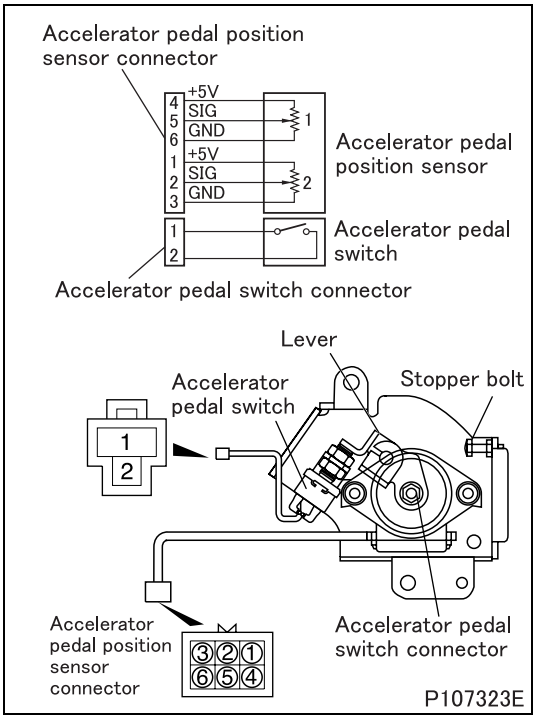

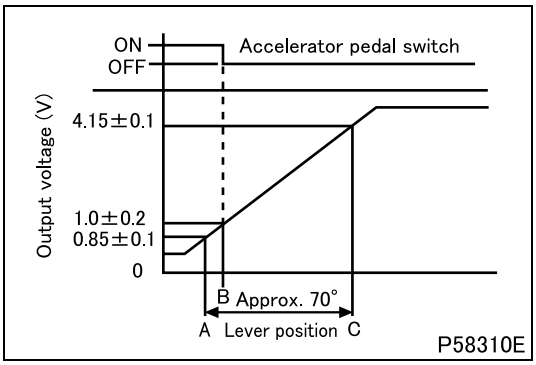

#324 Inspection of accelerator pedal position sensor

[Inspection]

- Apply DC 5 V to terminals 4 and 6 and terminals 1 and 3 of the accelerator pedal position sensor connector.
- Measure the output voltage at terminals 5 and 6 (sensor 1) and the output voltage at terminals 2 and 3 (sensor 2) with the lever in each specified position.

	Lever position	Output voltage
Standard value	Idling position A	0.85 ± 0.1 V
	Accelerator pedal switch operating position B	1.0 ± 0.2 V
	Full load position C	4.15 ± 0.1 V

A: Position in which accelerator pedal switch is fully pushed in by lever
B: Position at which continuity between terminals 1 and 2 of accelerator pedal switch connector disappears as accelerator pedal is pushed downward
C: Position in which lever is touching stopper bolt

- If any output voltage is out of specification, make an adjustment.
- If any output voltage is still out of specification when you have made an adjustment, replace the sensor.

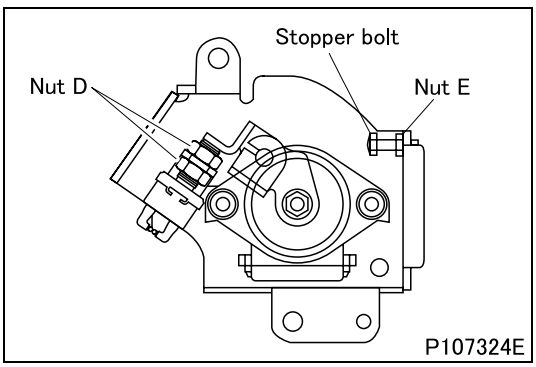

[Adjustment]

- To adjust the output voltage for the accelerator pedal switch operating position A, use nut D.
- To adjust the output voltage for the full load position C, loosen nut E and make the adjustment using the stopper bolt.
- After making the adjustment, lock the stopper bolt in position with the nut.

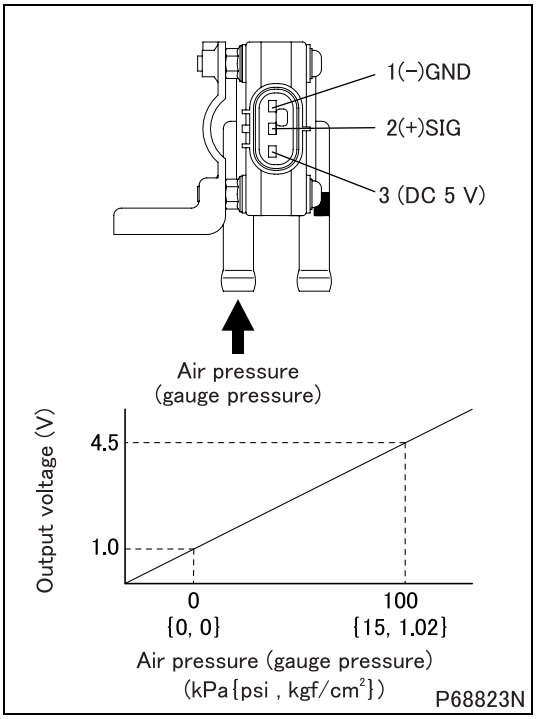

#334 Inspection of DPF pressure sensor

<DPF pressure sensor (DIFF)>

- Apply DC 5 V to terminals 3 and 1.
- Apply air pressure (gauge pressure) and measure the output voltage occurring at terminals 2 and 1 (left figure).

Standard value	0 ± 3.5 kPa {0 ± 0.5 psi, 0 ± 0.04 kgf/cm^2}	1 V
	100 ± 3.5 kPa {15 ± 0.5 psi, 1.02 ± 0.04 kgf/cm^2}	4.5 V

- If the measurement is out of specification, replace the sensor.

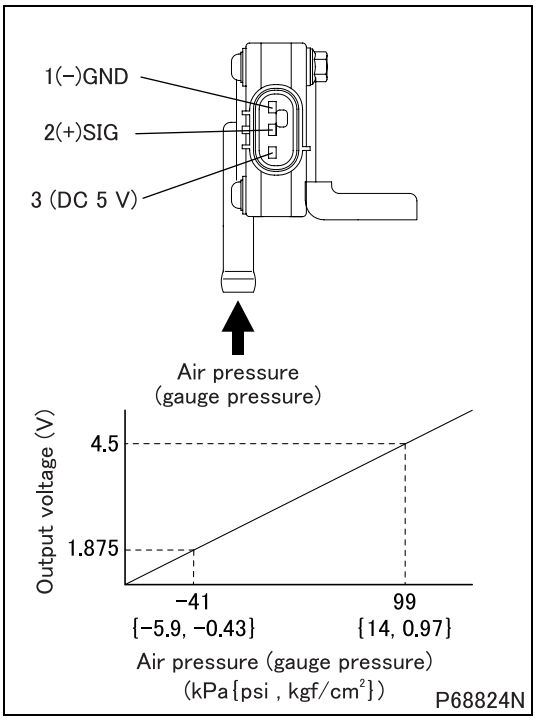

<DPF absolute pressure sensor>

- Apply DC 5 V to terminals 3 and 1.
- Apply air pressure (gauge pressure) and measure the output voltage occurring at terminals 2 and 1 (left figure).

Standard value	−41 ± 3.2 kPa {−5.9 ± 0.5 psi, −0.43 ± 0.03 kgf/cm^2}	1.875 V
	99 ± 3.2 kPa {14 ± 0.5 psi, 1.0 ± 0.03 kgf/cm^2}	4.5 V

- If the measurement is out of specification, replace the sensor.

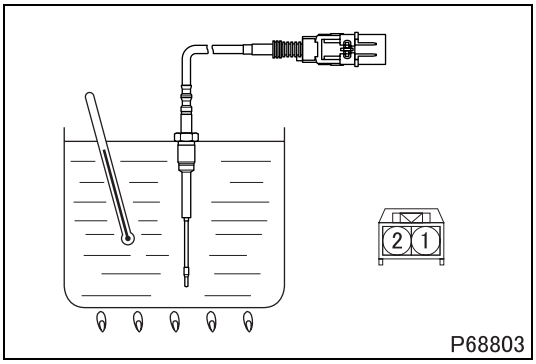

#336 DPF temperature sensor

<DPF temperature sensor 1>

- The DPF temperature sensor 1 may output false signals if its tip is contaminated. Clean it if necessary. (See Gr15.)
- Place the sensor in a container filled with engine oil.
- Heat the oil to each of the specified temperatures. Stir the oil well while doing so.
- Measure the resistance between terminals 1 and 2.

Standard value	20°C {68°F}	241.8 kΩ
	50°C {122°F}	$106.2^{+74.3}_{-41.8}$ kΩ
	100°C {212°F}	$33.56^{+17.60}_{-10.60}$ kΩ
	150°C {302°F}	$13.90^{+5.36}_{-3.60}$ kΩ
	200°C {392°F}	$6.896^{+2.064}_{-1.252}$ kΩ

- If the measurement is out of specification, replace the sensor.

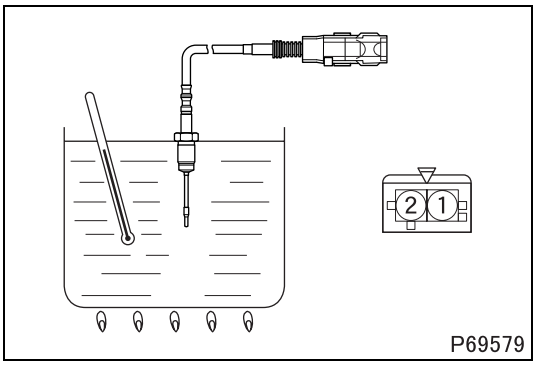

<DPF temperature sensor 2>

- The DPF temperature sensor 2 may output false signals if its tip is contaminated. Clean it if necessary. (See Gr15.)
- Place the sensor in a container filled with engine oil.
- Heat the oil to each of the specified temperatures. Stir the oil well while doing so.
- Measure the resistance between terminals 1 and 2.

Standard value	20°C {68°F}	241.8 kΩ
	50°C {122°F}	$106.2^{+74.3}_{-41.8}$ kΩ
	100°C {212°F}	$33.56^{+17.60}_{-10.60}$ kΩ
	150°C {302°F}	$13.90^{+5.36}_{-3.60}$ kΩ
	200°C {392°F}	$6.896^{+2.064}_{-1.252}$ kΩ

- If the measurement is out of specification, replace the sensor.

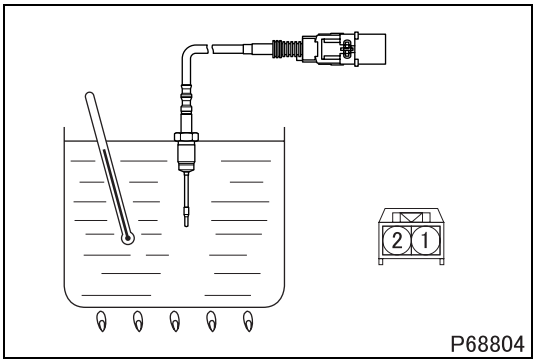

#338 Inspection of catalytic temperature sensor

- The catalytic temperature sensor may output false signals if its tip is contaminated. Clean it if necessary. (See Gr15.)
- Place the sensor in a container filled with engine oil.
- Heat the oil to each of the specified temperatures. Stir the oil well while doing so.
- Measure the resistance between terminals 1 and 2.

Standard value	20°C {68°F}	241.8 kΩ
	50°C {122°F}	$106.2^{+74.3}_{-41.8}$ kΩ
	100°C {212°F}	$33.56^{+17.60}_{-10.60}$ kΩ
	150°C {302°F}	$13.90^{+5.36}_{-3.60}$ kΩ
	200°C {392°F}	$6.896^{+2.064}_{-1.252}$ kΩ

- If the measurement is out of specification, replace the sensor.

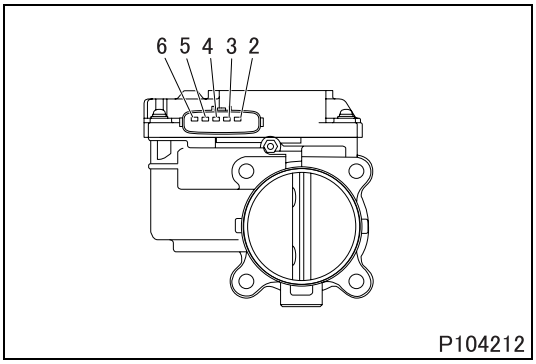

#529 Inspection of intake throttle

- Perform the following checks. If there is any abnormality, replace the intake throttle.

(1) Coil resistance of motor

- Measure the resistance between terminals 5 and 6.

Standard value	0.3 to 80 Ω

- If the measurement is out of specification, manually operate the butterfly valve to the open and closed positions 5 times and measure the resistance again.

(2) Position sensor

- The sensor cannot easily be inspected, so you must evaluate it indirectly by inspection of system harnesses and related parts.
- If there is no abnormality in any related part but the system is abnormal, replace the intake throttle.

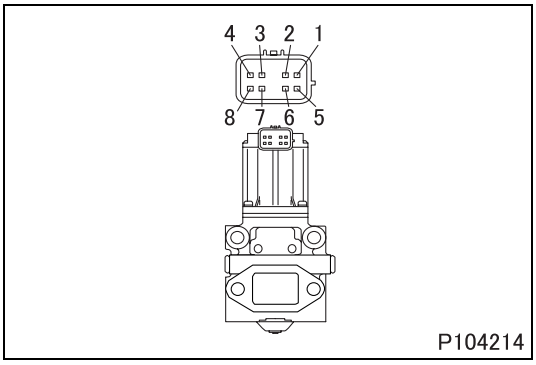

#530 Inspection of EGR valve

- Perform the following checks. If there is any abnormality, replace the EGR valve.

(1) Coil resistance of motor

- Measure the resistance between terminals 8 and 7, 8 and 6, and 7 and 6.

Standard value	2.1 ± 0.3 Ω

(2) Position sensor

- The sensor cannot easily be inspected, so you must evaluate it indirectly by inspection of system harnesses and related parts.
- If there is no abnormality in any related part but the system is abnormal, replace the EGR valve.

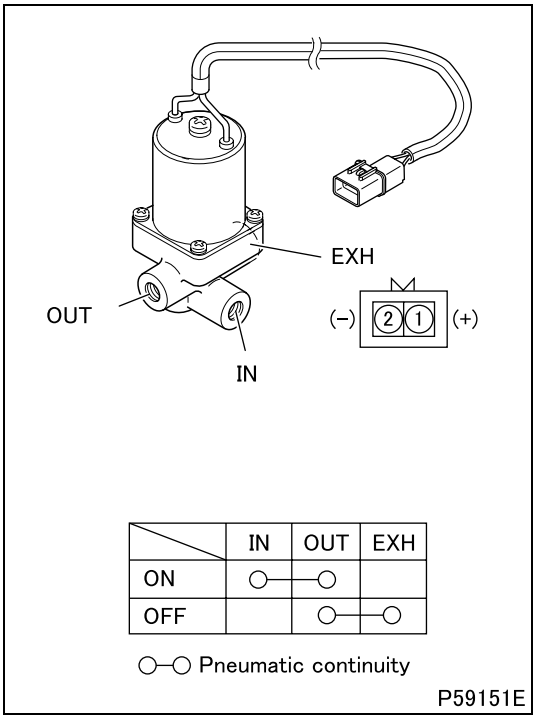

#565 Inspection of 3-way magnetic valve

- Perform the following checks. If there is any abnormality, replace the 3-way magnetic valve.

(1) Check of operation

- Gradually increase from zero the voltage applied to terminals 1 and 2.
- Observe the voltage when the 3-way magnetic valve operates. (Determine the magnetic valve's OFF-ON operation from the operating sound.)

Standard value (min. operating voltage)	10 V or lower

(2) Check of continuity and airtightness

- Air pressure applied during check: 981 kPa {140 psi, 10 kgf/cm^2}

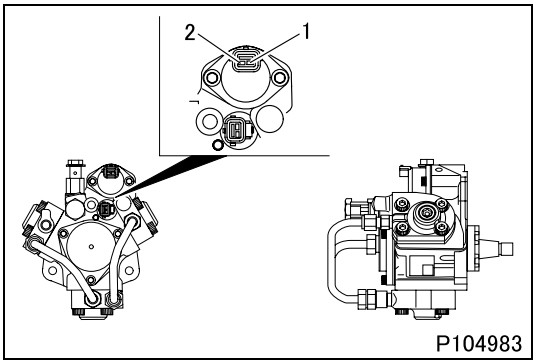

#574 Inspection of SCV (suction control valve)

- Measure the resistance between terminals 1 and 2.

Standard value	2.1 ± 0.2 Ω

- If the measurement is out of specification, replace the supply pump.

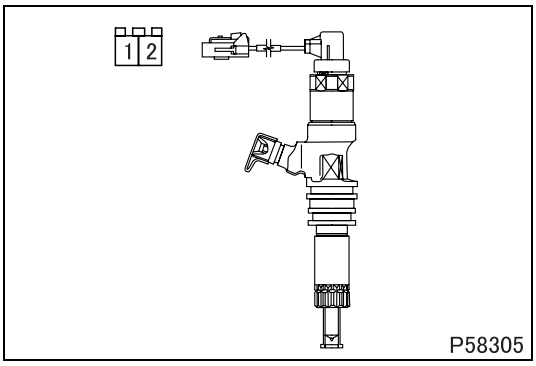

#582 Inspection of injector

- Measure the resistance between terminals 1 and 2.

Standard value (at 20°C {68°F})	0.45 ± 0.1 Ω

- If the measurement is out of specification, replace the injector.

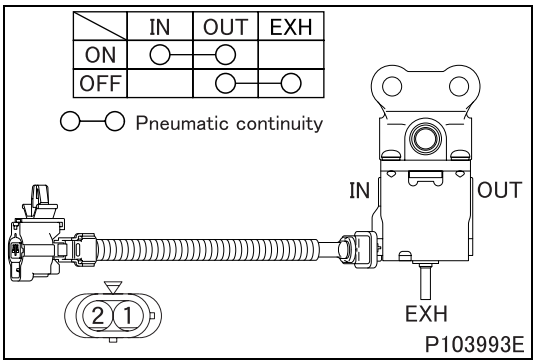

#601 Inspection of waste gate magnetic valve

- Perform the following checks. If there is any abnormality, replace the waste gate magnetic valve.

(1) Check of operation

- Gradually increase from zero the voltage applied to terminals 1 and 2.
- Observe the voltage when the waste gate magnetic valve operates.
  (Determine the magnetic valve's OFF-ON operation from the operating sound.)

Standard value (min. operating voltage)	9 V or lower

(2) Check of continuity and airtightness

- Air pressure applied during check: 300 kPa {44 psi, 3.1 kgf/cm^2}

M E M O

INSTALLED LOCATIONS OF PARTS

A01 to 19

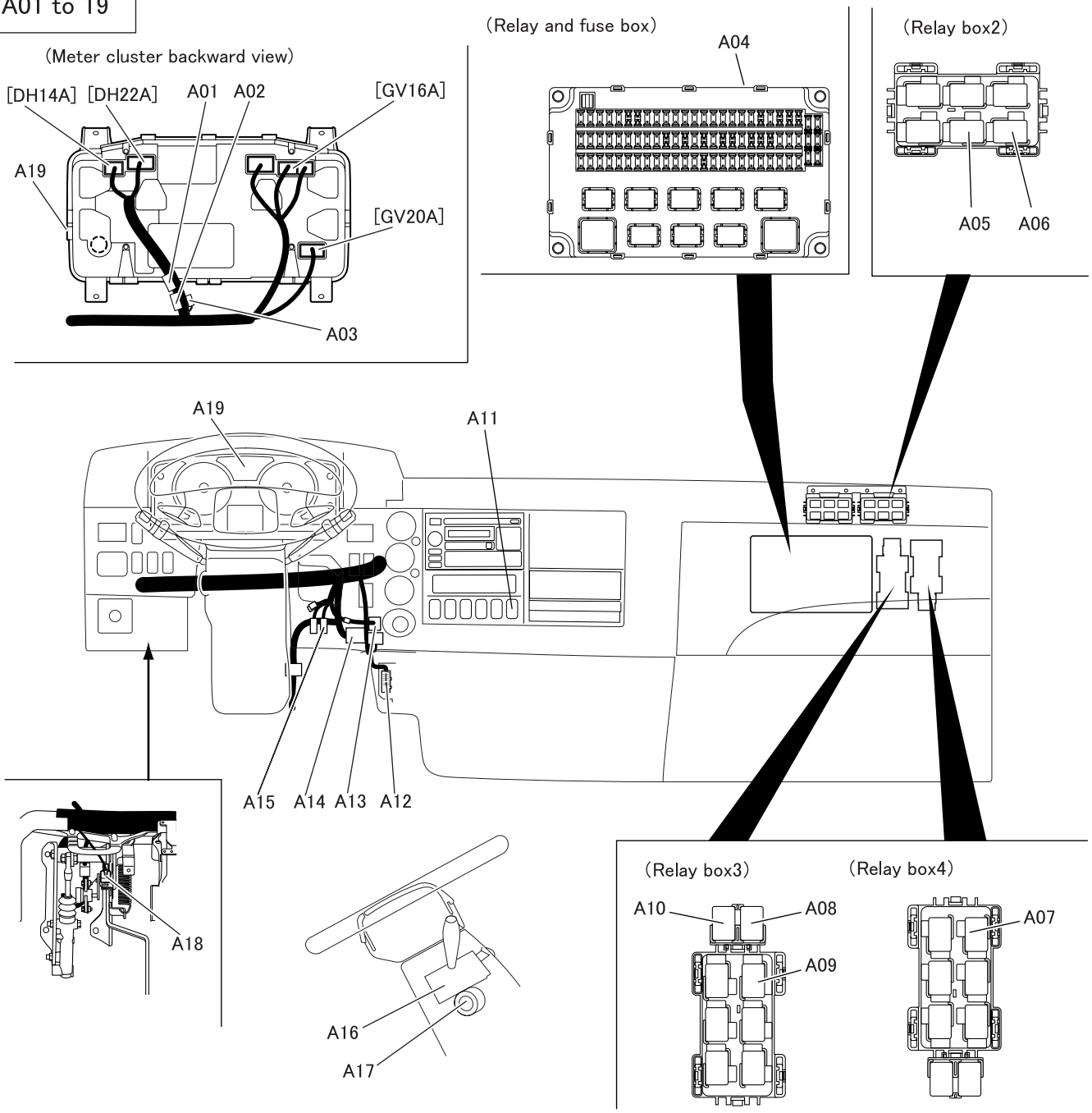

A01 Joint connector (J/C-2)
A02 Joint connector (J/C-6)
A03 CAN resistor
A04 Relay and fuse box
A05 Transmission power take-off relay
A06 Parking brake relay
A07 ECU main relay
A08 Neutral start relay
A09 Safety relay
A10 EDU relay
A11 DPF cleaning switch
A12 Diagnostic connector
A13 Accelerator pedal switch
A14 Accelerator pedal position sensor
A15 Diagnosis switch
A16 Combination switch
A17 Starter switch
A18 Clutch switch
A19 Meter cluster

ECU : Electronic control unit
EDU : Electronic drive unit
DPF : Diesel particulate filter

Indicate by connector type [ ].

L02609

A20 to 27

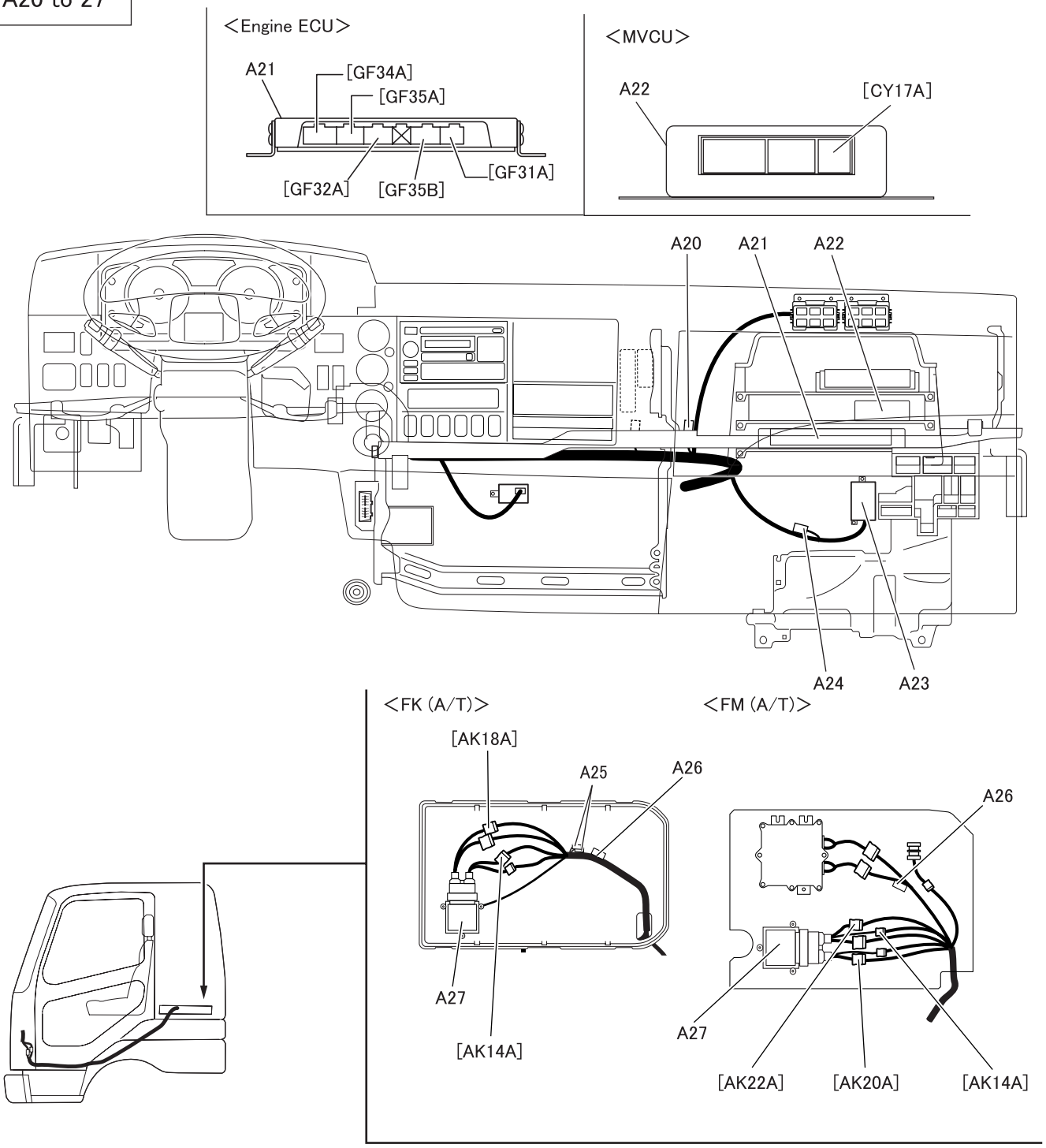

A20 CAN resistor
A21 Engine ECU
A22 MVCU
A23 Pulse converter <A/T>
A24 Diode unit
A25 CAN resistor
A26 Joint connector (J/C-3) <A/T>
A27 A/T ECU

A/T : Automatic transmission
ECU : Electronic control unit
MVCU : Multifunction vehicle control unit

Indicate by connector type [ ].

L02610

INSTALLED LOCATIONS OF PARTS

A30 to 41

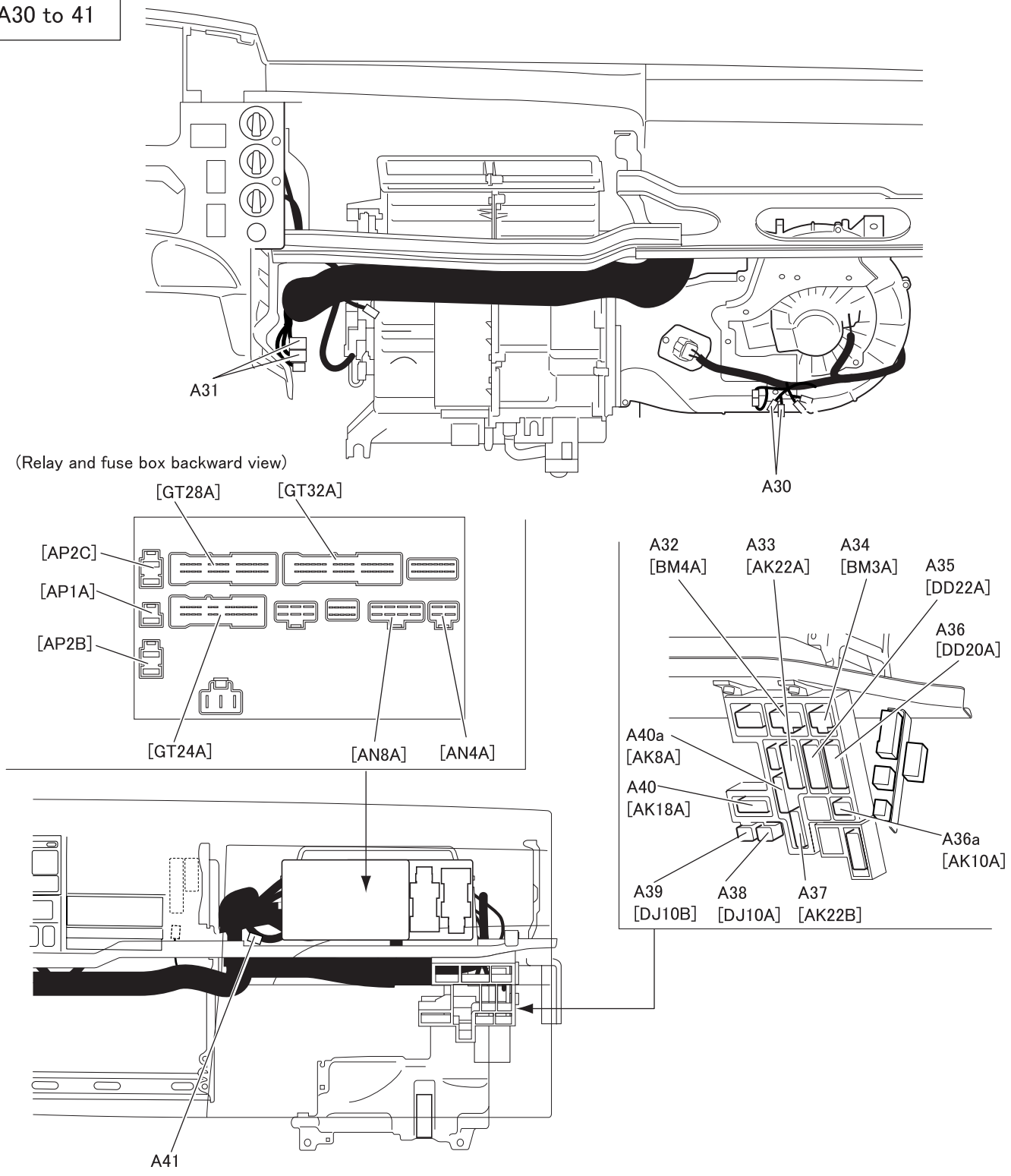

A30	Connector (for mixer)
A31	Connection of cab harness and A/T harness
A32–36a	Connection of cab harness and chassis harness
A37–40a	Connection of cab harness and engine control harness
A41	Joint connector (J/C–1, 3, 4)

A/T : Automatic transmission

L02611

B01 to 10

<FK>

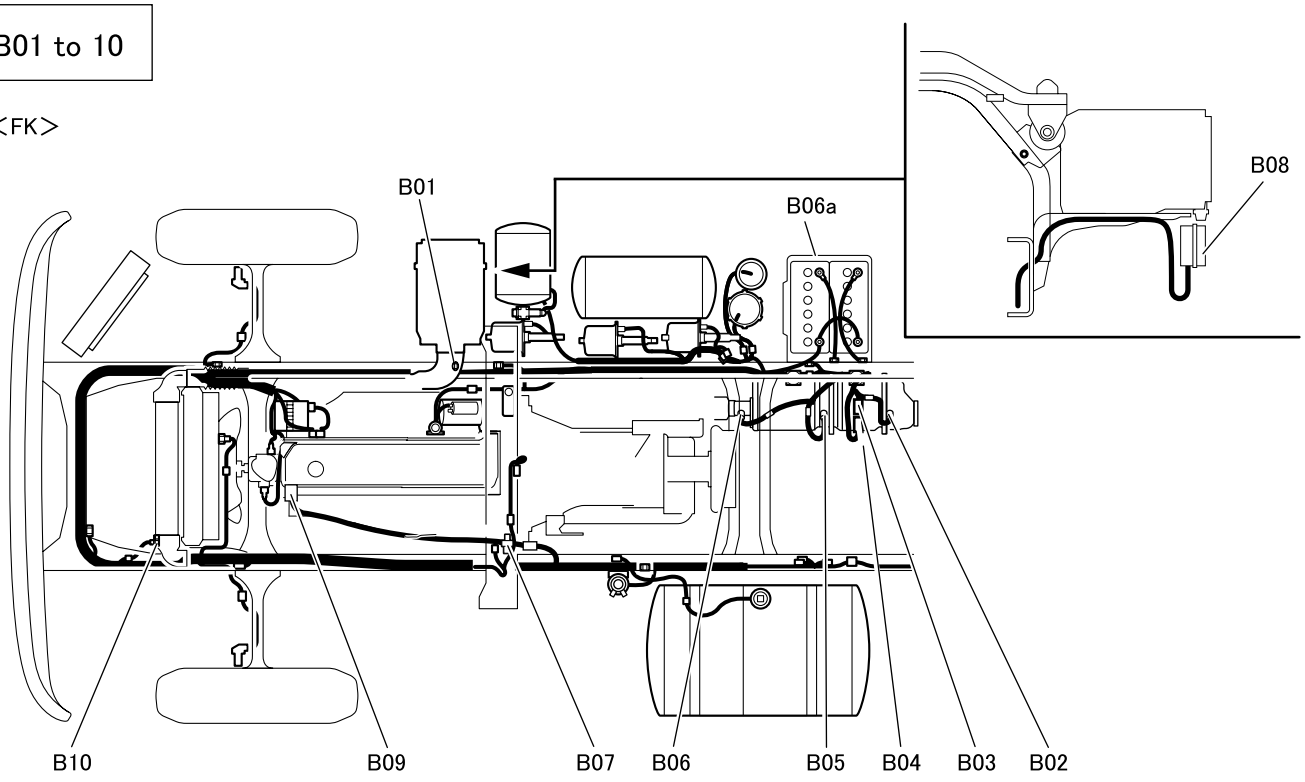

<FM>

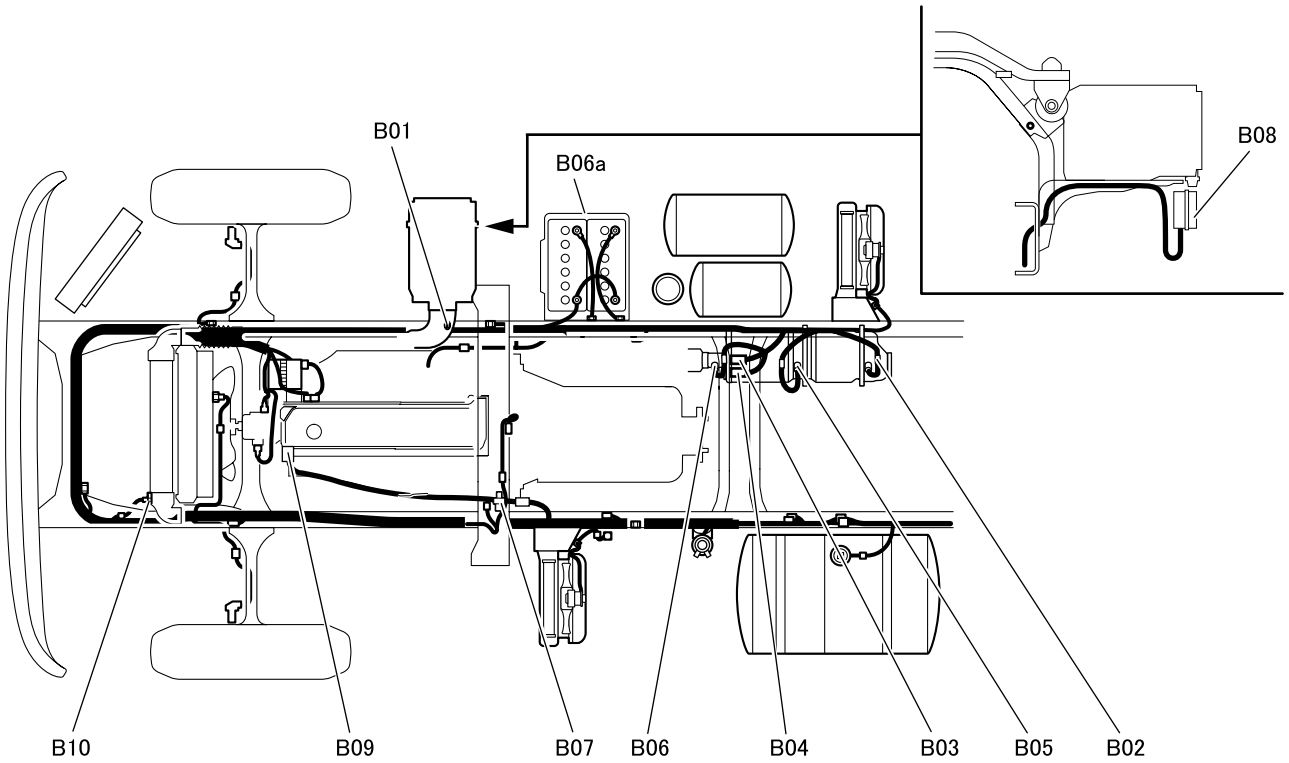

B01	Air flow sensor	B06	Catalytic temperature sensor
B02	DPF temperature sensor 2	B06a	Battery
B03	DPF absolute pressure sensor	B07	Auxiliary equipment load sensor
B04	DPF pressure sensor (DIFF)	B08	High−crrent fuse box
B05	DPF temperature sensor 1	B09	Connection of engine harness and injector harness
		B10	Intake air temperature sensor 1

DPF : Diesel particulate filter

L02612

INSTALLED LOCATIONS OF PARTS

B20 to 29

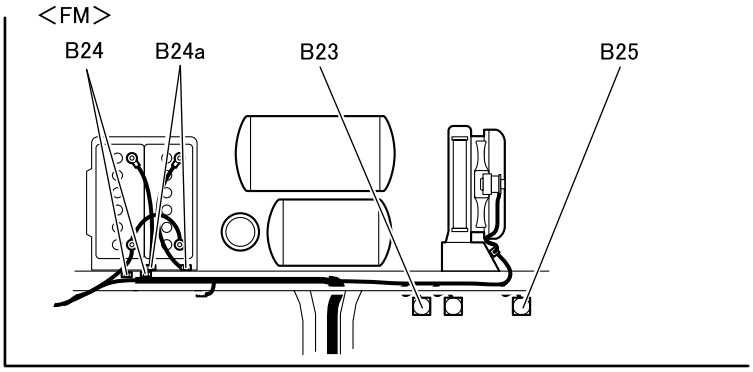

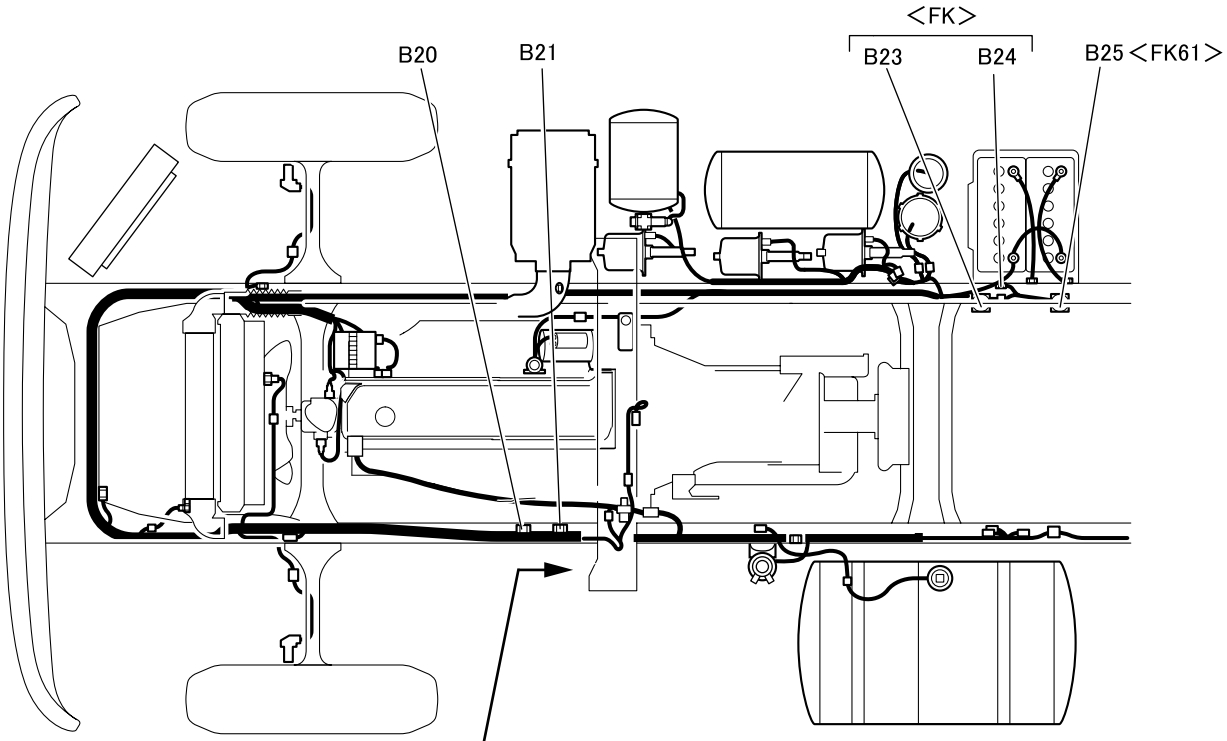

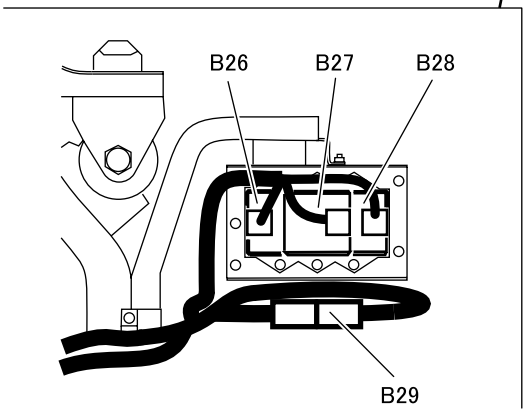

B20 Ground
B21 Ground
B23 Exhaust shutter 3-way magnetic valve 1
B24 Ground
B24a Ground
B25 Exhaust shutter 3-way magnetic valve 2
B26 EGR EDU3
B27 Throttle EDU
B28 EGR EDU1
B29 Connection of engine harness and engine control harness

L02613

C01 to 13

(Front view)

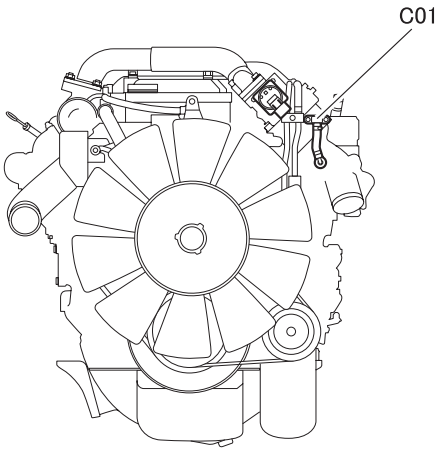

(Upper view)

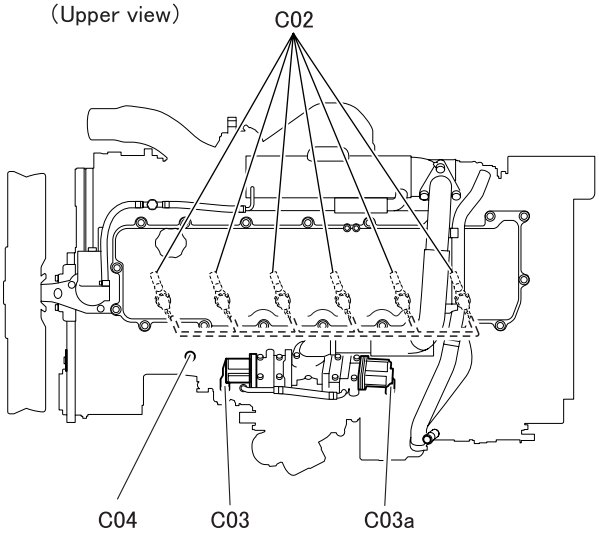

(Right side view)

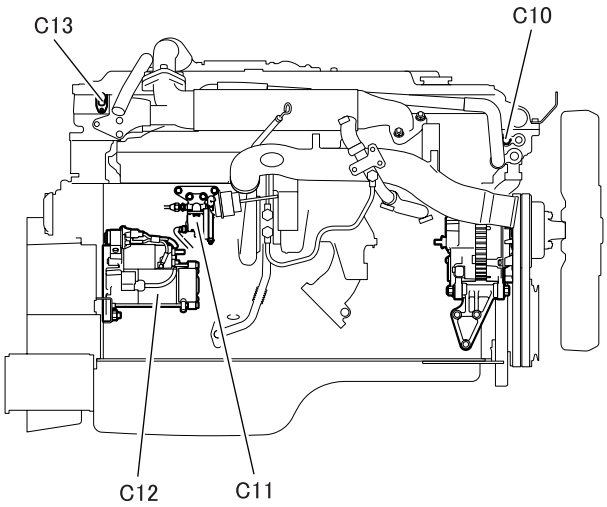

(Left side view)

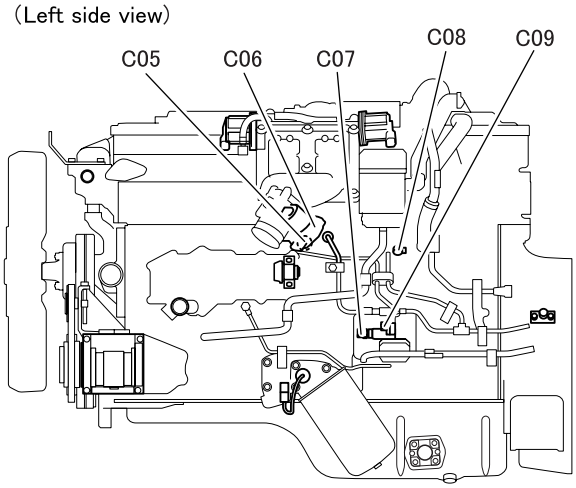

C01 Boost pressure sensor
C02 Injector magnetic valve
C03 EGR valve 1
(building into motor, position sensor)
C03a EGR valve 3
(building into motor, position sensor)
C04 Intake air temperature sensor 2
C05 Common rail pressure sensor
C06 Throttle actuator
(building into motor, position sensor)
C07 Fuel temperature sensor 1
C08 Fuel temperature sensor 2
C09 Suction control valve
C10 Water temperature sensor
(connects to engine electronic control unit)
C11 Waste gate magnetic valve
C12 Starter
C13 Cylinder recognition sensor

EGR : Exhaust gas recirculation

INSTALLED LOCATIONS OF PARTS

C20 to 22

＜Manual transmission＞

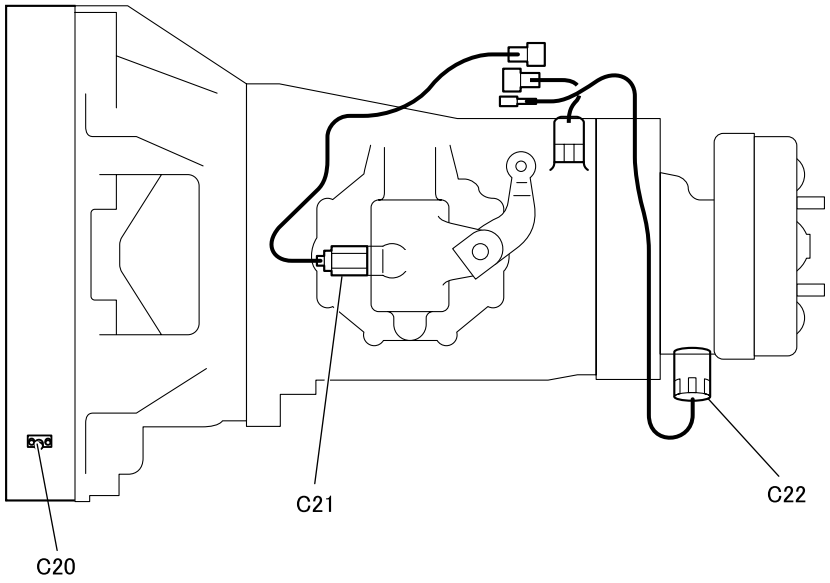

＜Automatic transmission＞

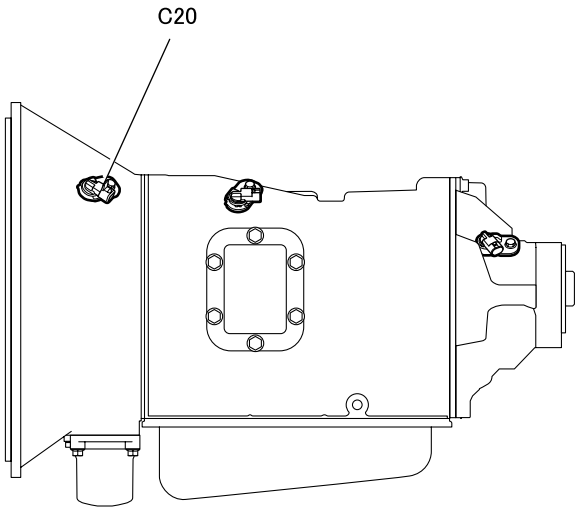

C20 Engine speed sensor
C21 Transmission neutral switch
C22 Vehicle speed sensor

L02615

M E M O

ELECTRIC CIRCUIT DIAGRAM

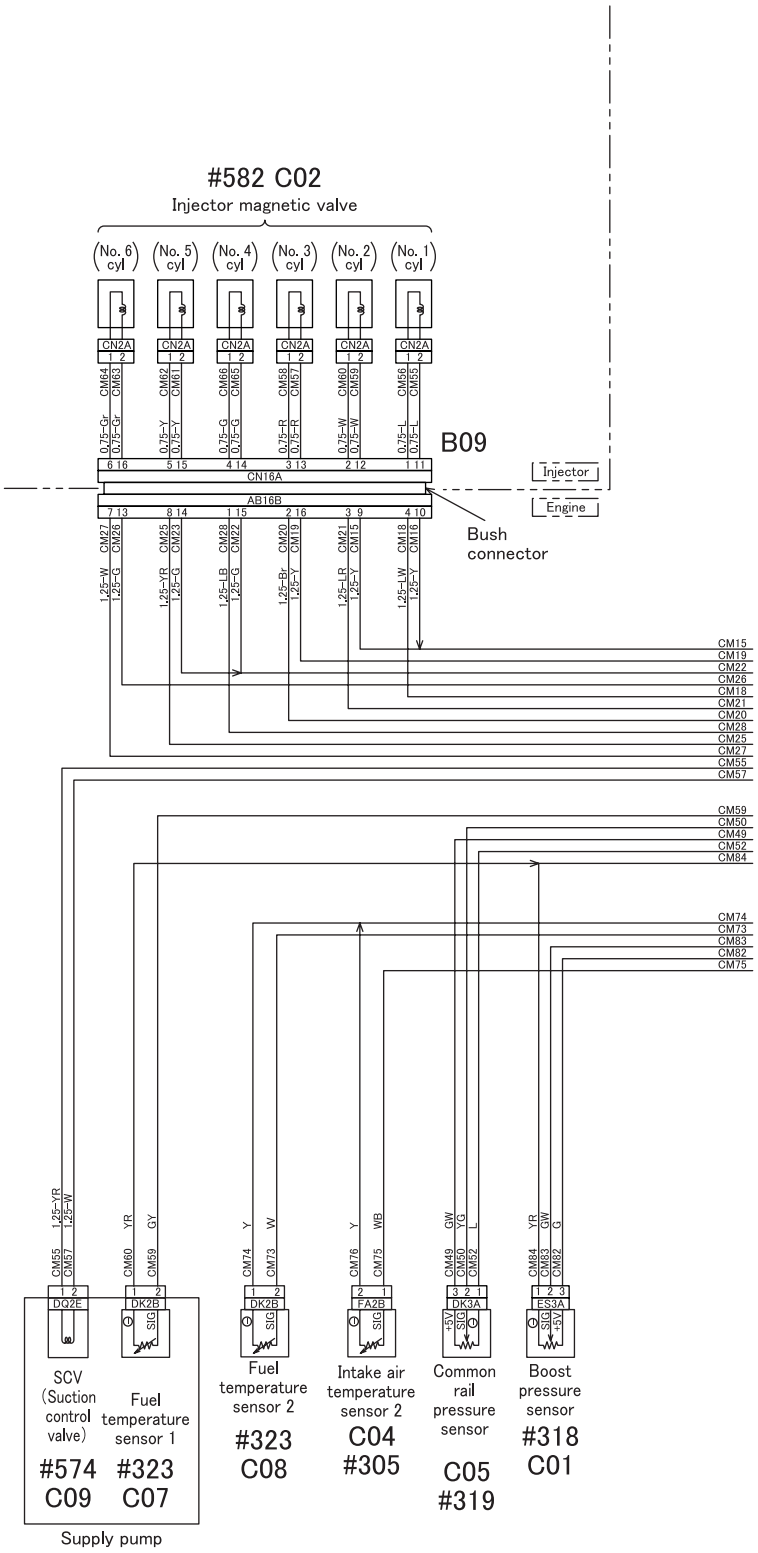

13EA-C04942-1

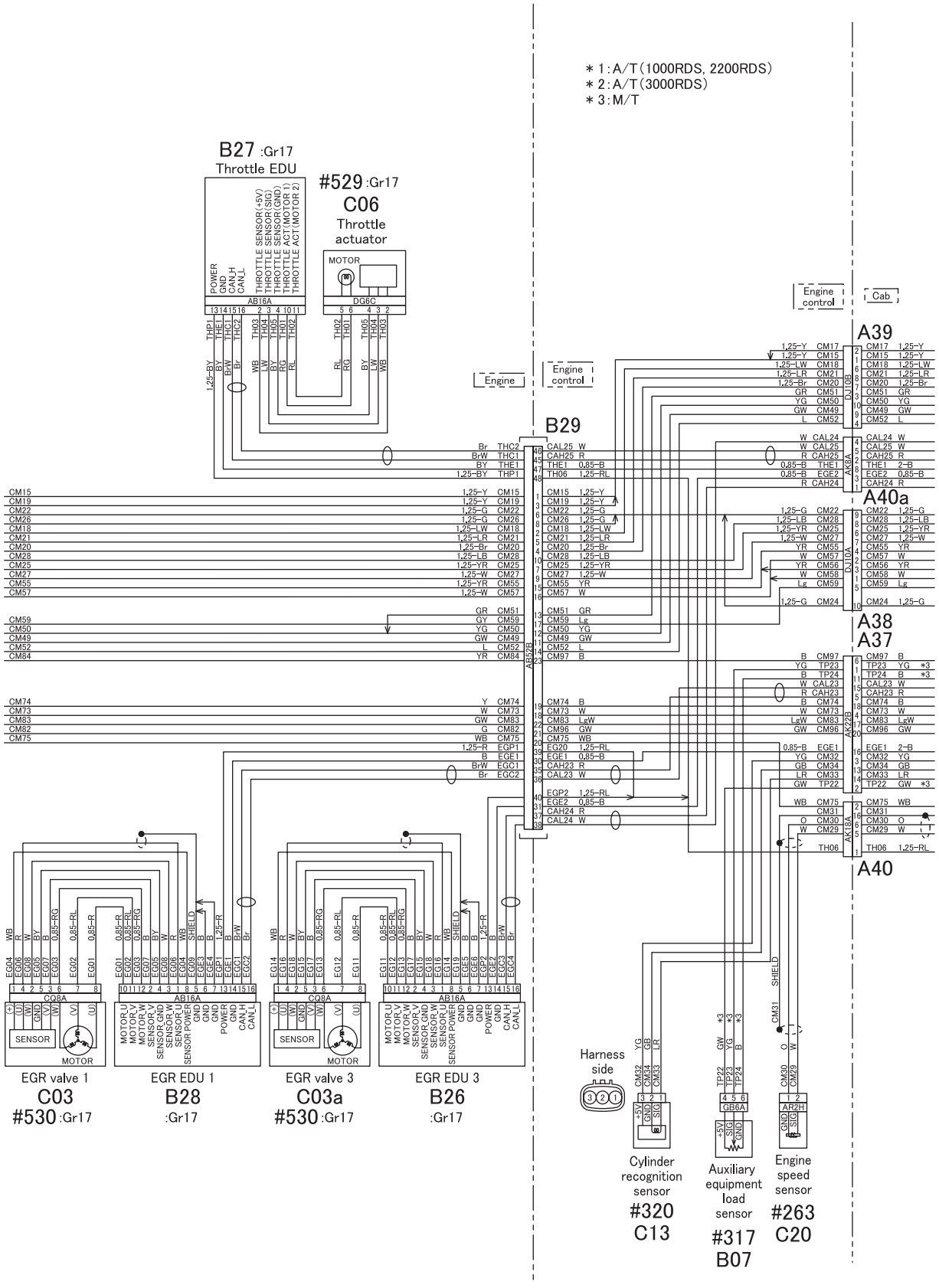

13EA-C04942-2

ELECTRIC CIRCUIT DIAGRAM

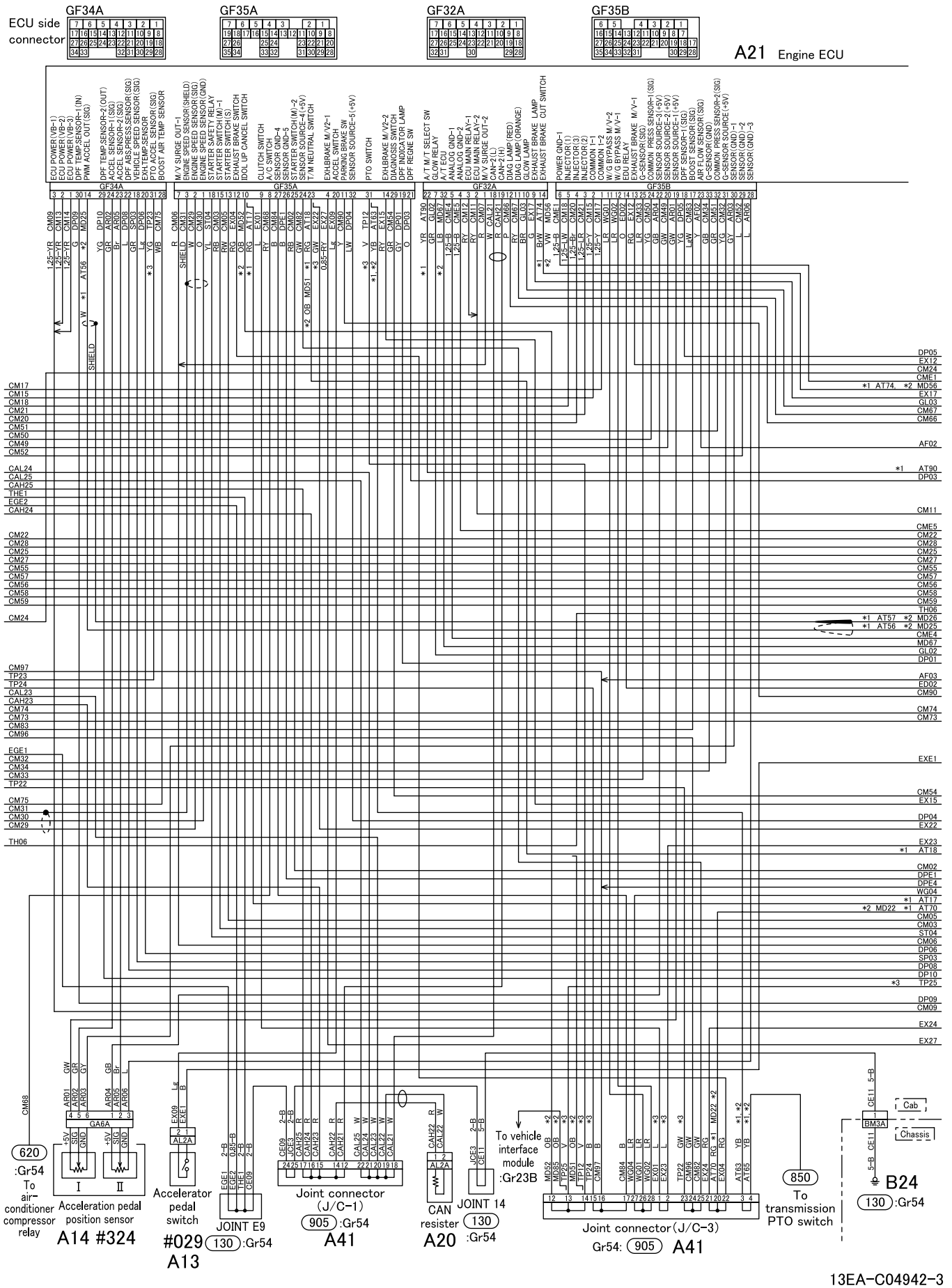

13EA-C04942-3

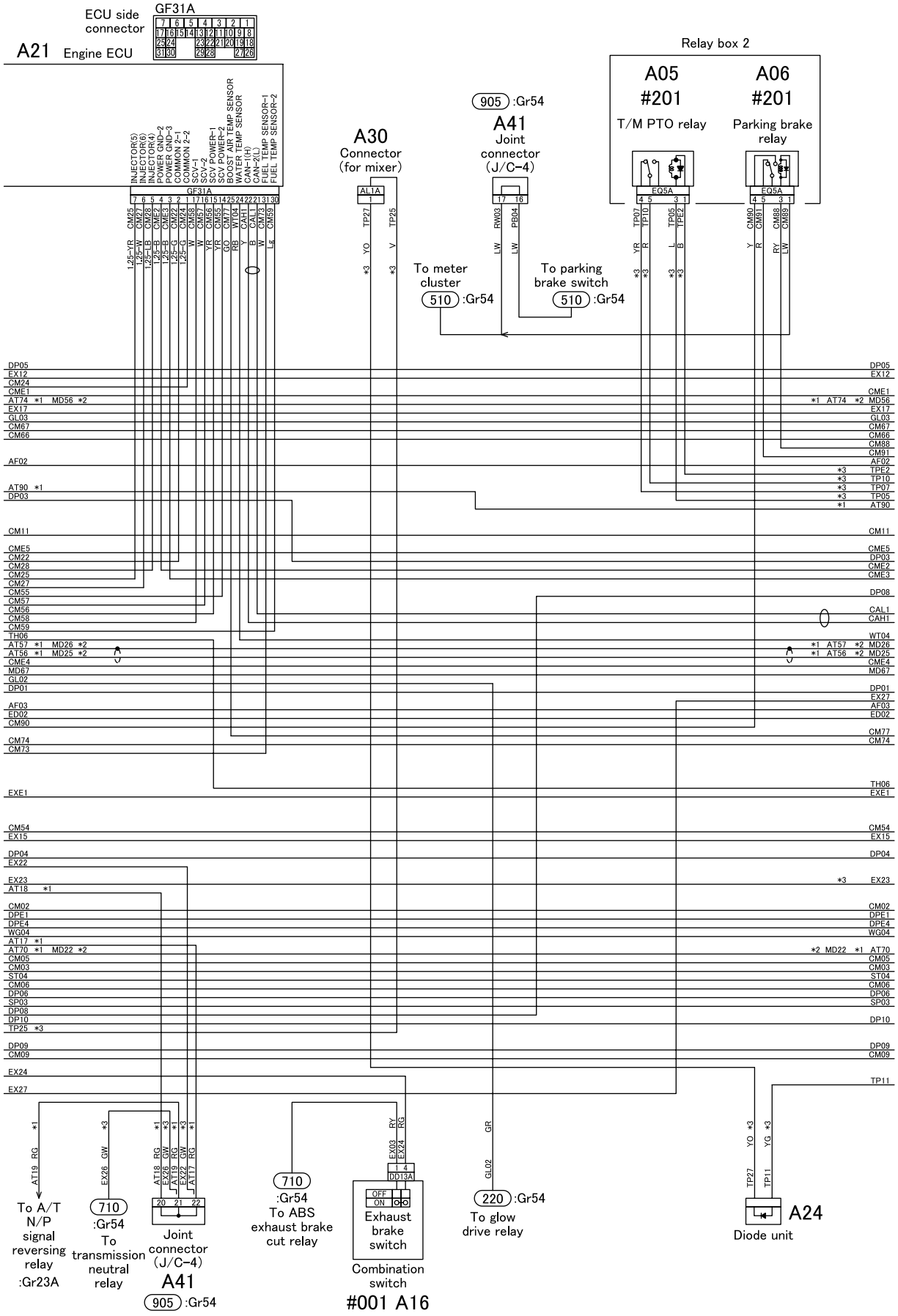

13EA-C04942-4

ELECTRIC CIRCUIT DIAGRAM

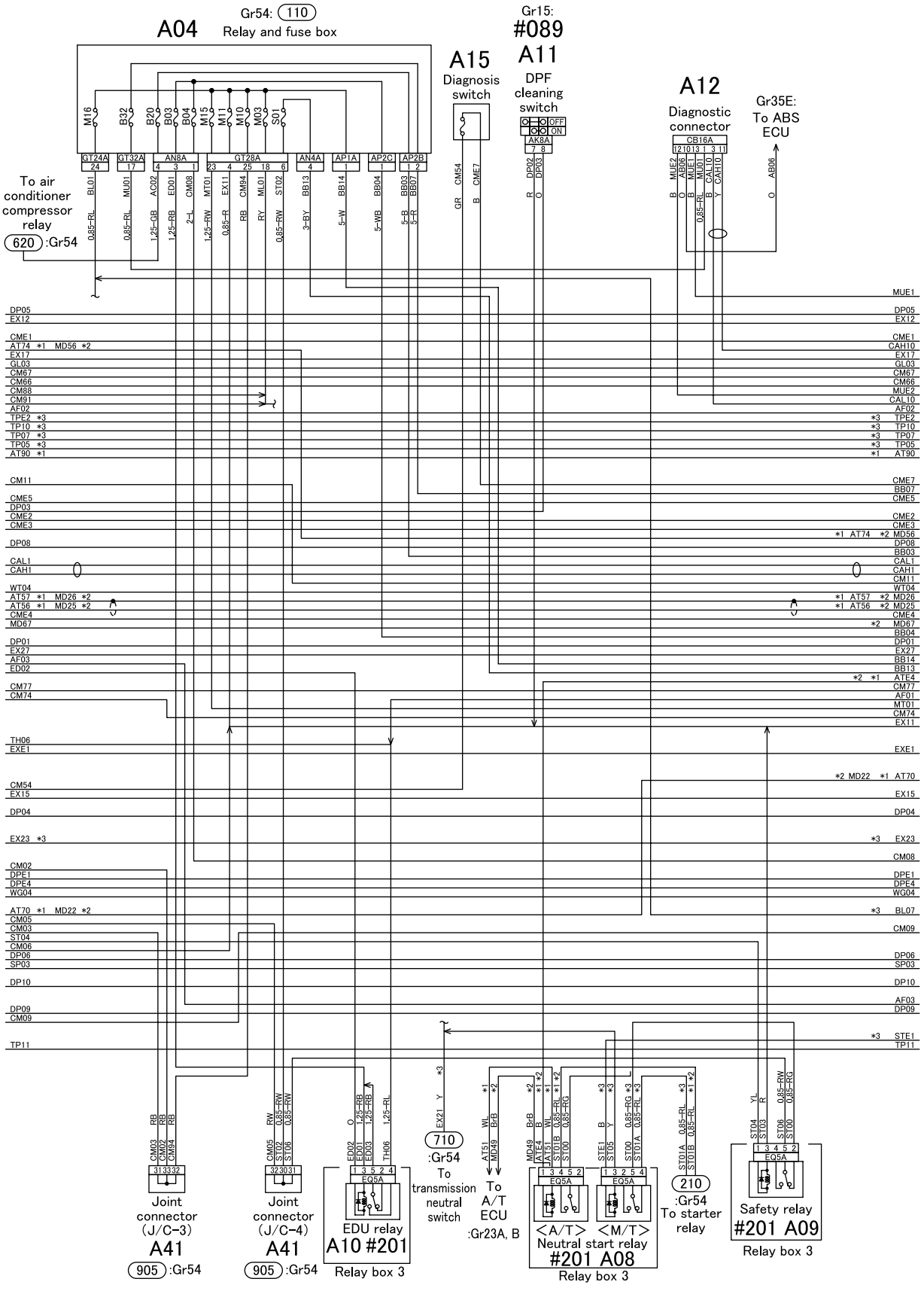

13EA-C04942-5

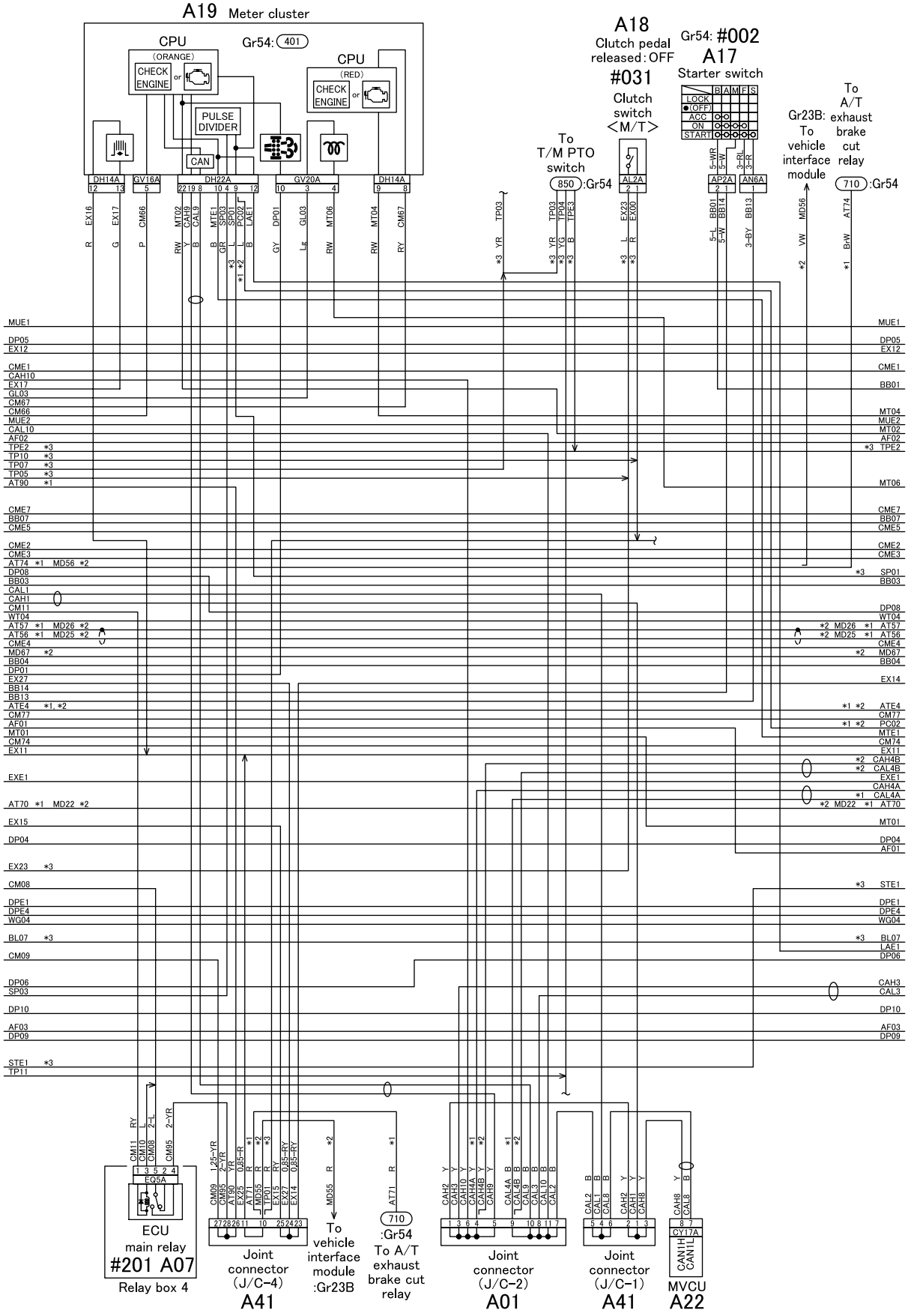

13EA-C04942-6

ELECTRIC CIRCUIT DIAGRAM

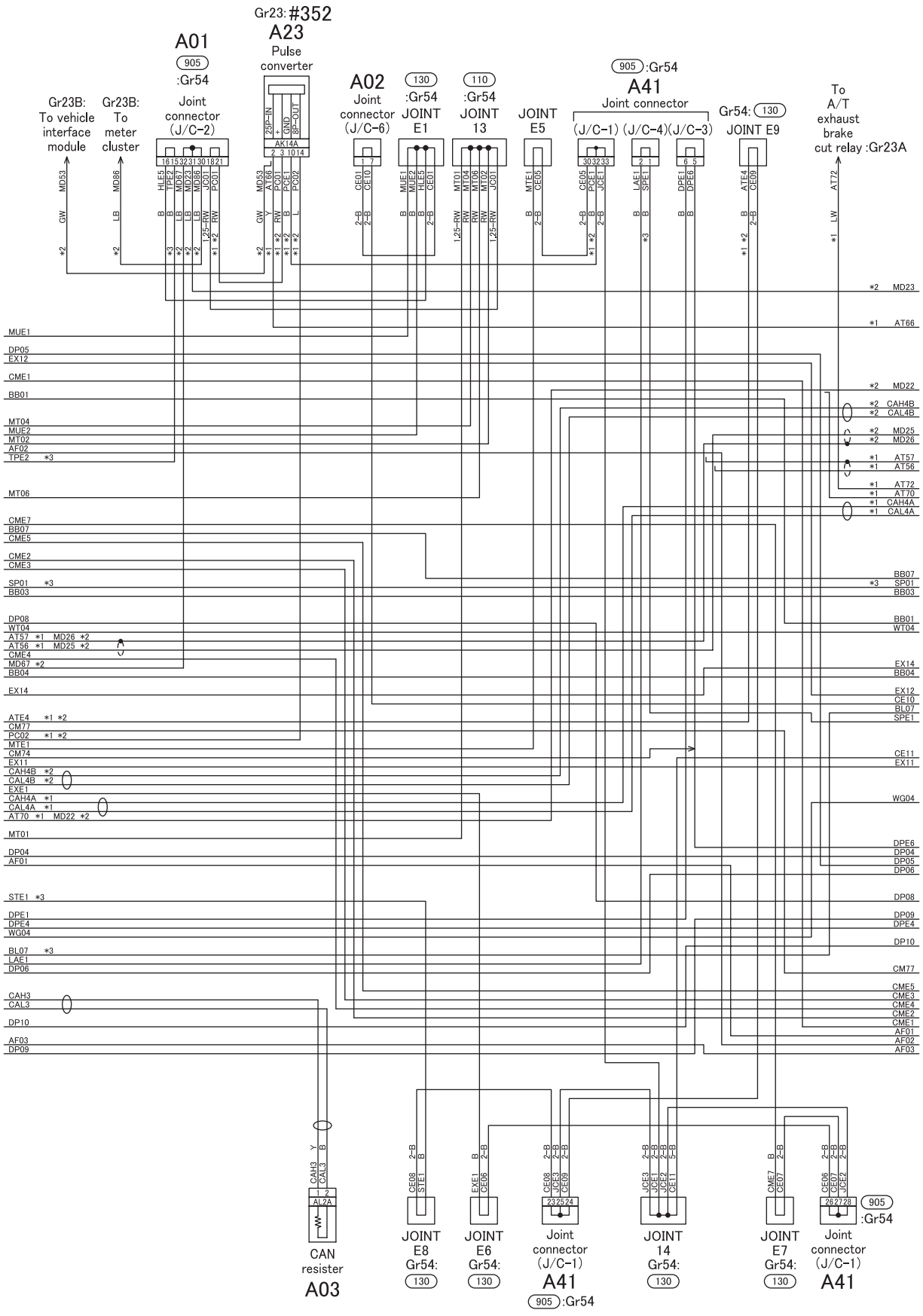

13EA-C04942-7

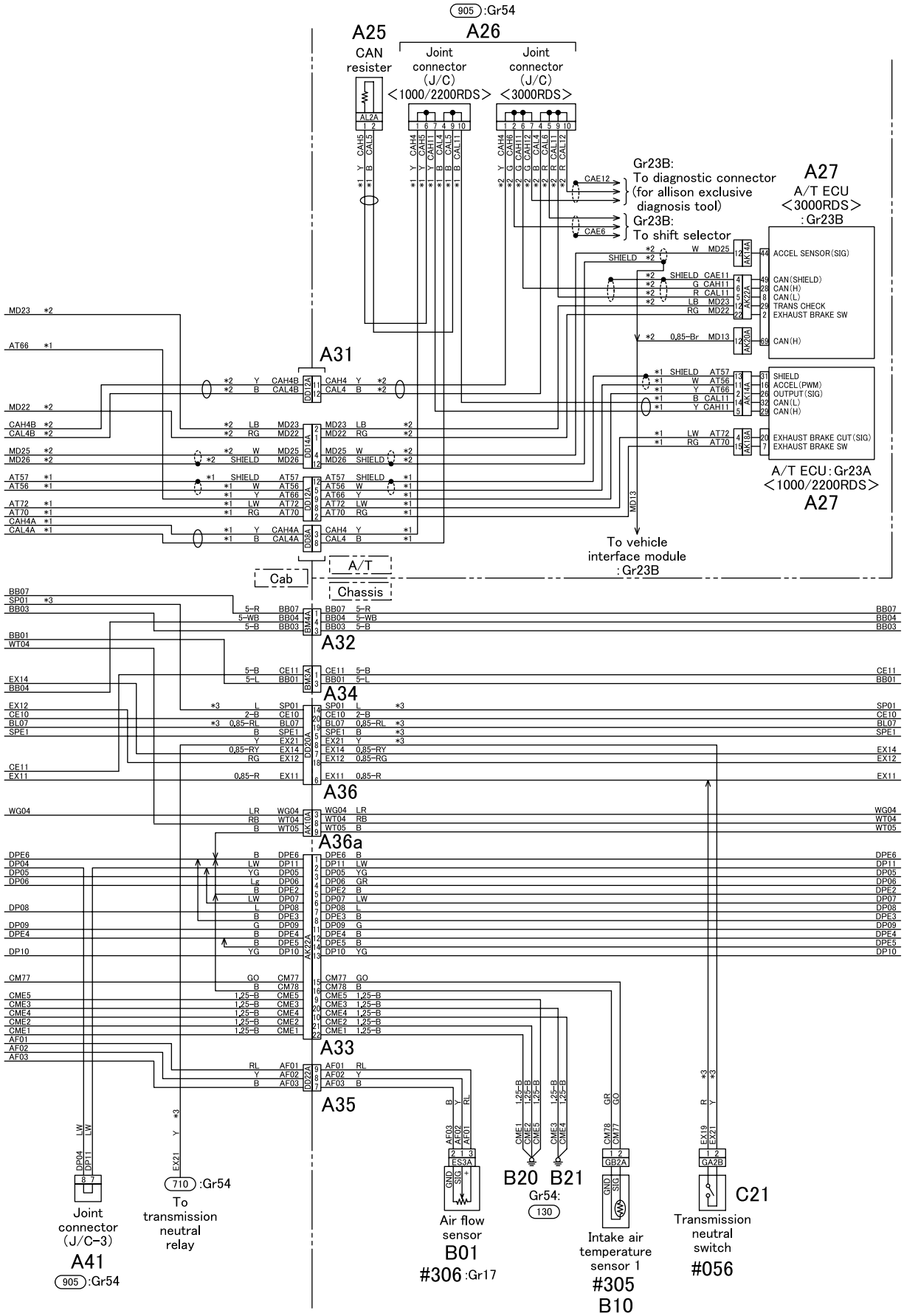
905 :Gr54
A25
CAN resister
A26
Joint connector (J/C) <1000/2200RDS>
Joint connector (J/C) <3000RDS>
Gr23B: To diagnostic connector (for allison exclusive diagnosis tool)
Gr23B: To shift selector
A27
A/T ECU <3000RDS> : Gr23B
ACCEL SENSOR(SIG)
CAN(SHIELD)
CAN(H)
CAN(L)
TRANS CHECK
EXHAUST BRAKE SW
CAN(H)
A31
SHIELD
ACCEL(PWM)
OUTPUT(SIG)
CAN(L)
CAN(H)
EXHAUST BRAKE CUT(SIG)
EXHAUST BRAKE SW
A/T ECU : Gr23A <1000/2200RDS>
A27
To vehicle interface module : Gr23B
A/T
Cab
Chassis
A32
A34
A36
A36a
A33
A35
Joint connector (J/C-3)
A41
905 :Gr54
710 :Gr54
To transmission neutral relay
Air flow sensor
B01
#306 :Gr17
B20 B21
Gr54: 130
Intake air temperature sensor 1
#305
B10
Transmission neutral switch
#056
C21

ELECTRIC CIRCUIT DIAGRAM

A/T: Automatic transmission
M/T: Manual transmission
T/M: Transmission
ABS: Anti-lock brake system
ECU: Electronic control unit
EDU: Electronic drive unit
PTO: Power take-off
EGR: Exhaust gas recirculation
MVCU: Multifunction vehicle control unit
DPF: Diesel particulate filter
SW: Switch
M/V: Magnetic valve
A/C: Air-conditioner
N/P: Neutral/Parking
cyl: Cylinder

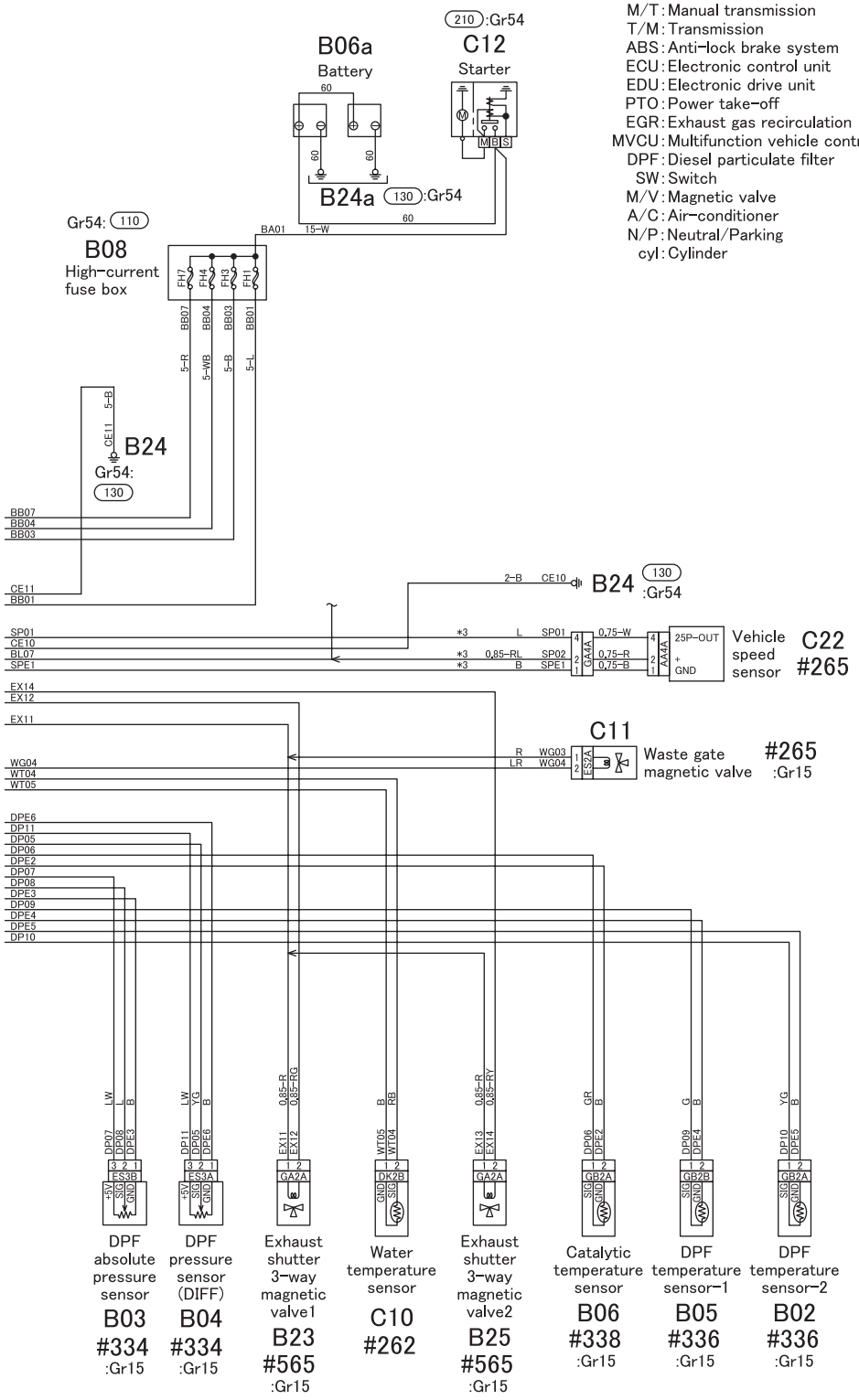

13EA-C04942-9

Group 13EB

Auto Cruise and Vehicle Speed Limitation System

Table of Contents

Back

Home

MITSUBISHI FUSO TRUCK OF AMERICA, Inc.

Pub.No.TWME0806-13EB

INDEX

STRUCTURE AND OPERATION

1. General Description 13EB-2
2. Electronic Control System 13EB-2
3. Electronic Control Unit Connection Diagram 13EB-6

TROUBLESHOOTING

1. Diagnosis Procedure 13EB-8
2. Diagnostic Precautions 13EB-8
3. Inspection Based on Diagnosis Codes..... 13EB-9
4. Multi-Use Tester Service Data 13EB-13
5. Actuator Tests Performed Using Multi-Use Tester 13EB-14
6. Works Required When Replacing the Multifunction Vehicle Control Unit (MVCU) 13EB-14
7. Inspections Performed at Electronic Control Unit Connectors 13EB-15

INSPECTION OF ELECTRICAL EQUIPMENT 13EB-16

INSTALLED LOCATIONS OF PARTS 13EB-18

ELECTRIC CIRCUIT DIAGRAM 13EB-24

STRUCTURE AND OPERATION

1. General Description

- The MVCU (Multifunction Vehicle Control Unit) is an integrated electronic control unit which has the following functions:
  - Auto cruise function
  - Vehicle speed limiting (SLD) function
- For these functions, MVCU receives the sensor and switch information from other ECUs via CAN communication system.
- In the auto cruise function, the target vehicle speed is set using the main switch, set switch and resume switch, and the MVCU maintains the set speed by controlling the engine.
- The vehicle speed limiting (SLD) function is designed to send output signals to the engine ECU to restrict the maximum vehicle speed to a preset speed limit regardless of the accelerator pedal operation when the vehicle speed reaches the speed limit on flat or uphill road.
- The MVCU also has the self-diagnosis function to diagnose major components and warns the driver if any abnormality is found.

2. Electronic Control System

2.1 System block diagram

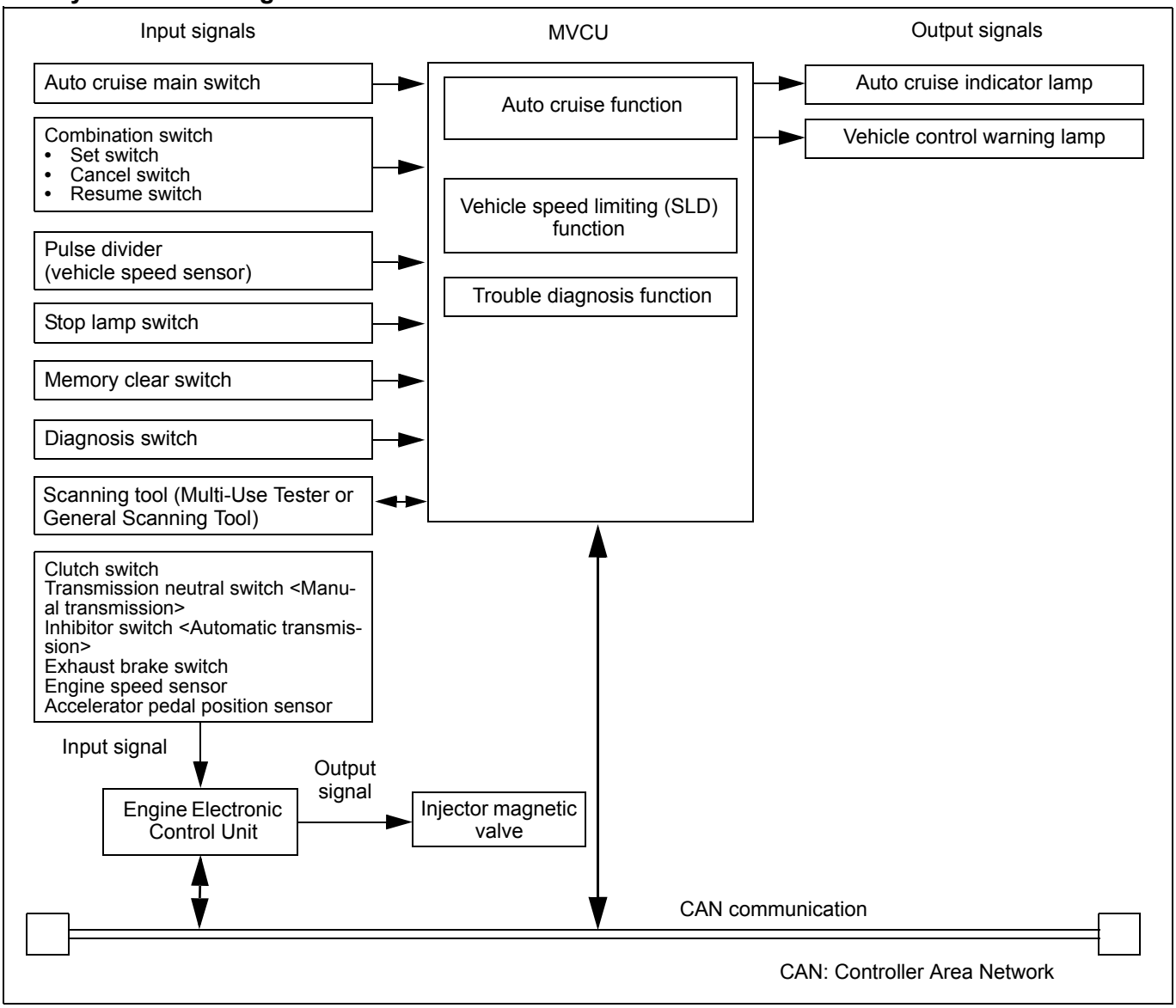

Part name	Function/operation
Auto cruise main switch	ON-OFF control of auto cruise system
Set switch	Selection and change of desired cruising speed
Cancel switch	Cancellation of current cruising speed
Resume switch	Resumption and change of canceled cruising speed
Pulse divider (vehicle speed sensor)	Detection of vehicle speed
Stop lamp switch	Detection of brake pedal depression (lamp lit on pedal being pressed)
Memory clear switch	Clearing of existing diagnosis code, output of earlier diagnosis codes
Diagnosis switch	Output of diagnosis codes
Scanning tool (Multi-Use Tester or General Scanning Tool)	Communication between Scanning tool (Multi-Use Tester or General Scanning Tool)
Auto cruise indicator lamp	Indication of system in operation
Vehicle control warning lamp	Indication of system failure
CAN communication (engine electronic control unit)	MVCU outputs recognized vehicle data on CAN so that engine electronic control unit receives necessary data for control. Engine electronic control unit outputs necessary signals to MVCU for appropriate control of individual systems.

2.2 Auto cruise function

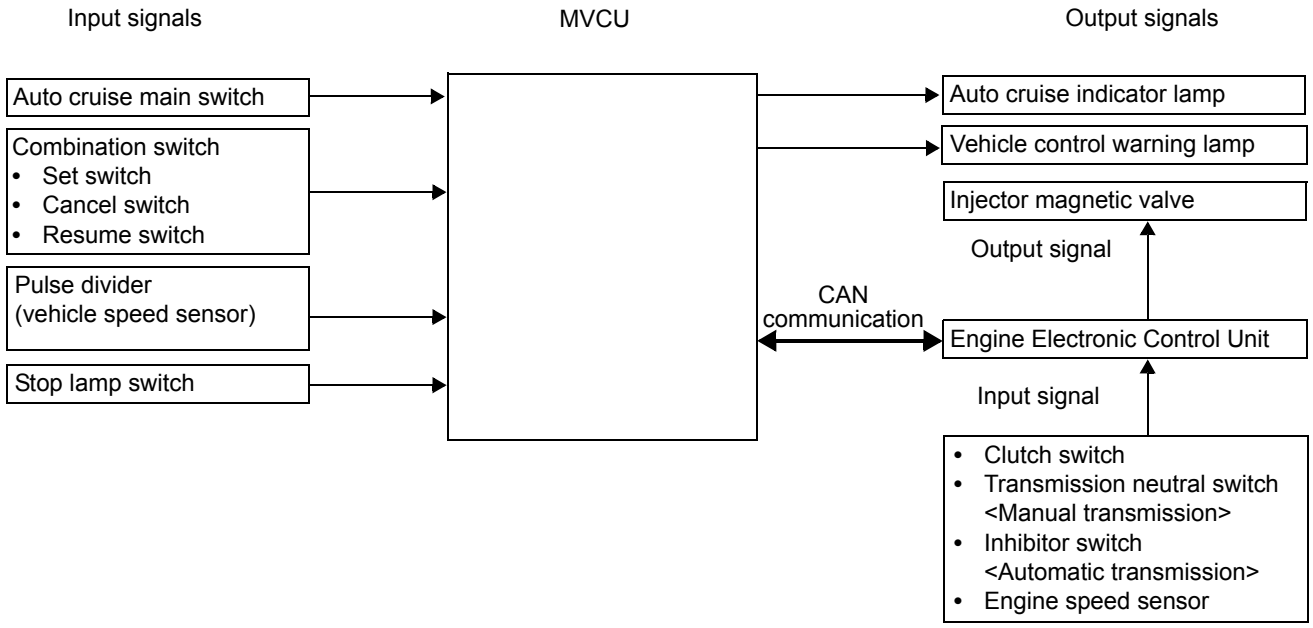

- In the auto cruise function, the target vehicle speed is set using the main switch, set switch and resume switch, and the MVCU maintains the set speed by controlling the engine.

(1) Setting the auto cruise function

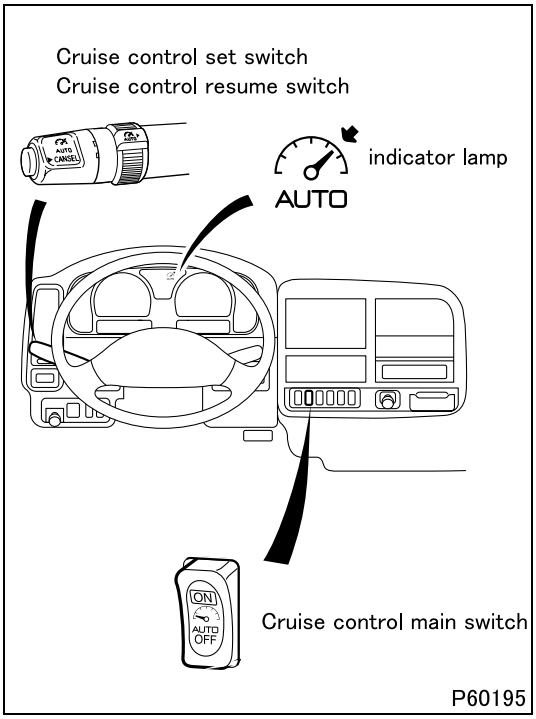

- The operation of the auto cruise function using the set switch and the resume switch as follows:

(1.1) Setting condition

- To activate the auto cruise function, the following conditions should be met:
  - Shift lever is in 4th or higher gear position.
  - Vehicle speed is increased to approx. 40 km/h {25 MPH} or higher.
  - The auto cruise main switch is in ON position.
  - The clutch and brake pedals are released.

(1.2) Set/resume switch turned to SET position

By turning the set/resume switch to the SET position, the driver can set a desired speed or change the existing set speed to another.

- To set a speed
  - Accelerate or decelerate the vehicle to a desired speed using the accelerator pedal.
  - Turn set/resume switch to the SET position, then release the switch. The speed is set at the moment the switch is released and indicator lamp illuminates.
- To decrease the set speed
  While driving at the set speed, turn set/resume switch to the SET position. The speed will decrease continuously as long as the switch is held in the SET position. When the desired speed is reached, release the switch; now the new lower speed is set.
- To increase the set speed
  Press the accelerator pedal. When the desired speed is reached, turn set/resume switch to the SET position and release it; now the new higher speed is set.

(1.3) Set/resume switch turned to RESUME position

By turning the set/resume switch to the RESUME position, the driver can resume the previously set speed or change the set speed to another.

- To resume the set speed
  If the cruise control is temporarily deactivated due to deceleration using the brake pedal, for example, the driver can resume the previously set speed by turning set/resume switch to the RESUME position and releasing it. As soon as the switch is released, the cruise control is reactivated and keeps the resumed constant speed.
- To increase the set speed
  While driving at the set speed, turn set/resume switch to the RESUME position. The vehicle will accelerate. When the desired speed is reached, release the switch; now the new higher speed is set.

(2) Disengaging the auto cruise control

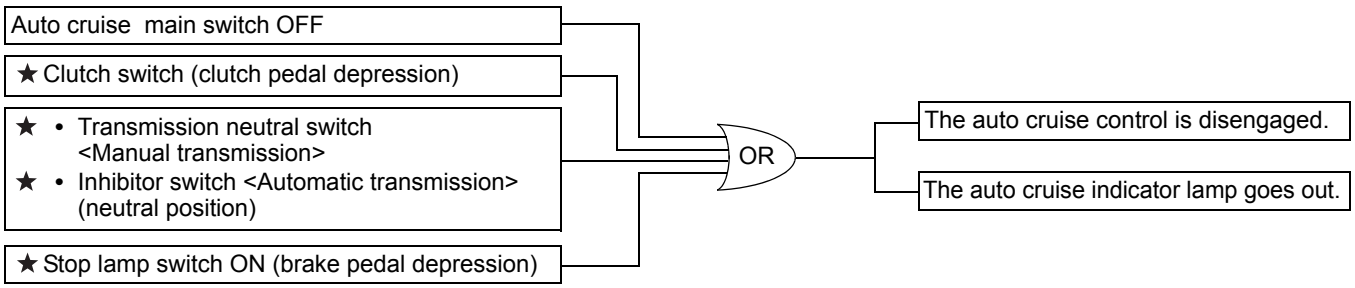

The condition marked ★ disengages the auto cruise control temporarily.

2.3 Vehicle speed limiting (SLD) function

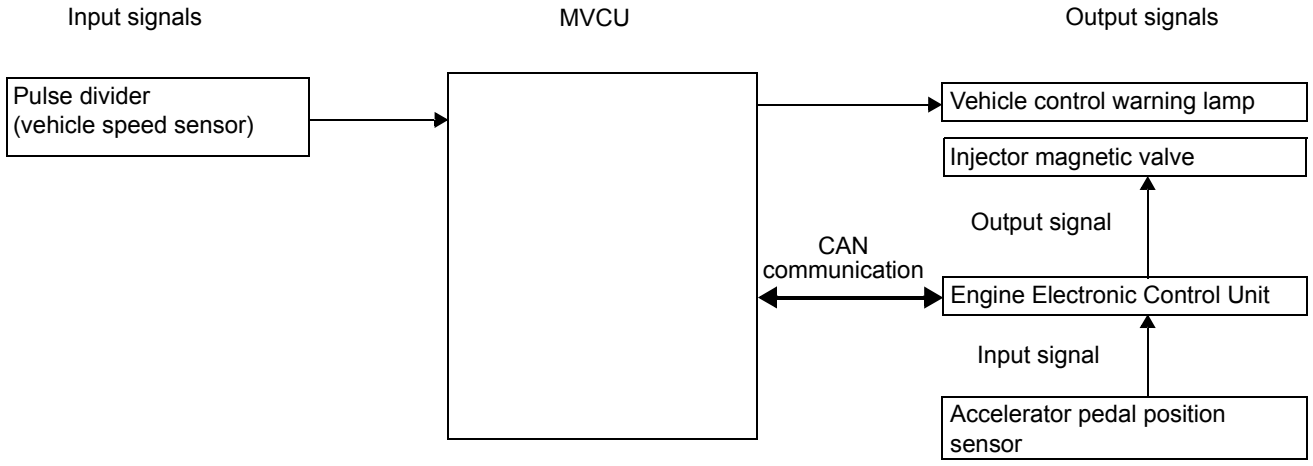

- The vehicle speed limiting (SLD) function is designed to send output signals to the engine ECU to restrict the maximum vehicle speed to a preset speed limit regardless of the accelerator pedal operation when the vehicle speed reaches the speed limit on flat or uphill road.

2.4 Trouble diagnosis function

- The system constantly performs trouble diagnosis to determine if various sensors, etc. malfunction when the starter switch is ON. When a failure is detected, trouble information is indicated on the meter cluster to inform the driver to that effect. At the same time, the location of the trouble is stored in memory as a diagnosis code to start restricted in-trouble control.
- While in trouble, the system's control functions are restricted to ensure safety of the vehicle and its driver. Diagnosis codes stored in memory can be retrieved on the Multi-Use Tester or through blinking warning lamp.
- Diagnosis codes are different in kind between the Multi-Use Tester and blinking warning lamp.

3. Electronic Control Unit Connection Diagram

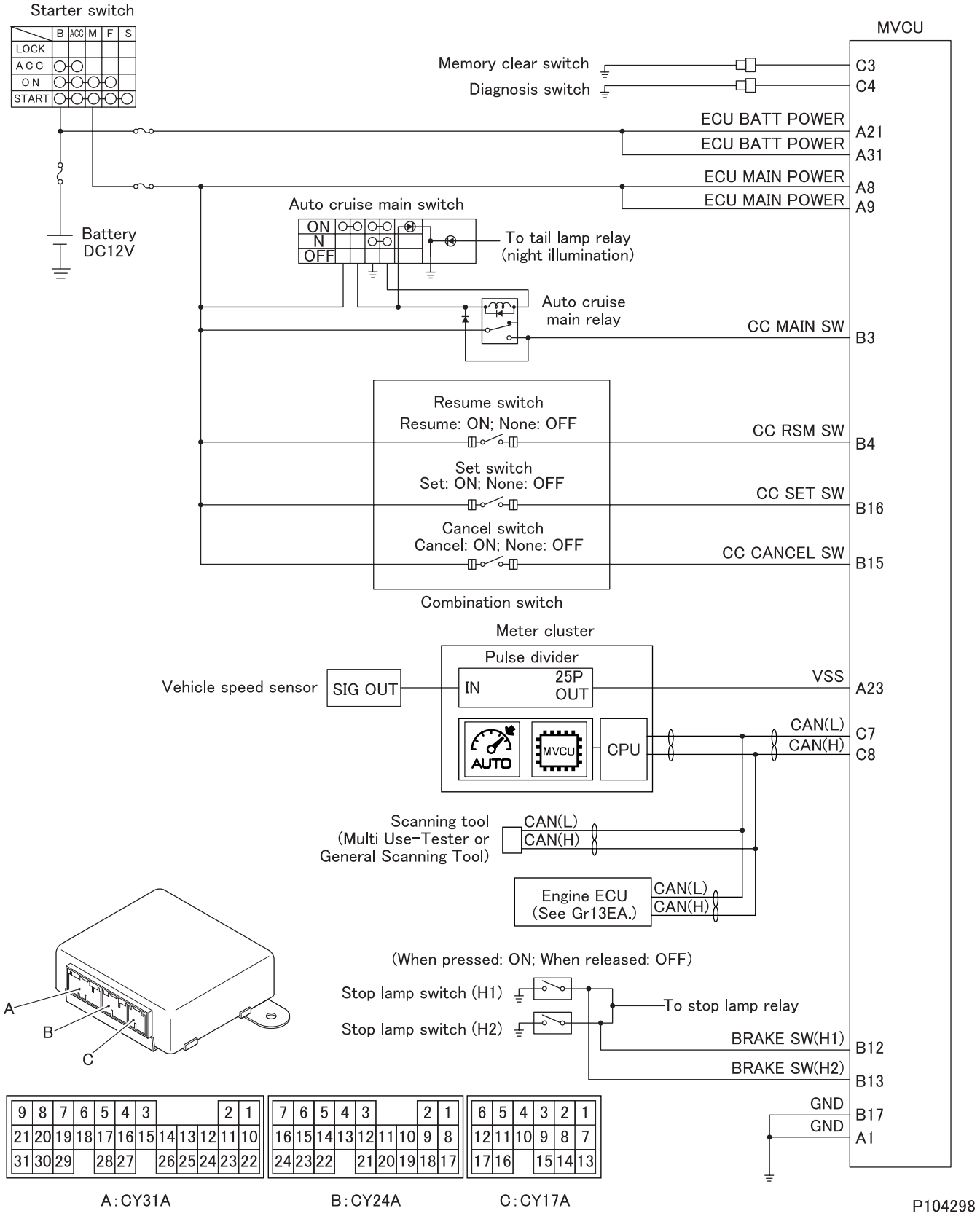

M E M O

TROUBLESHOOTING

1. Diagnosis Procedure

- Perform the inspection in accordance with the following flowchart.

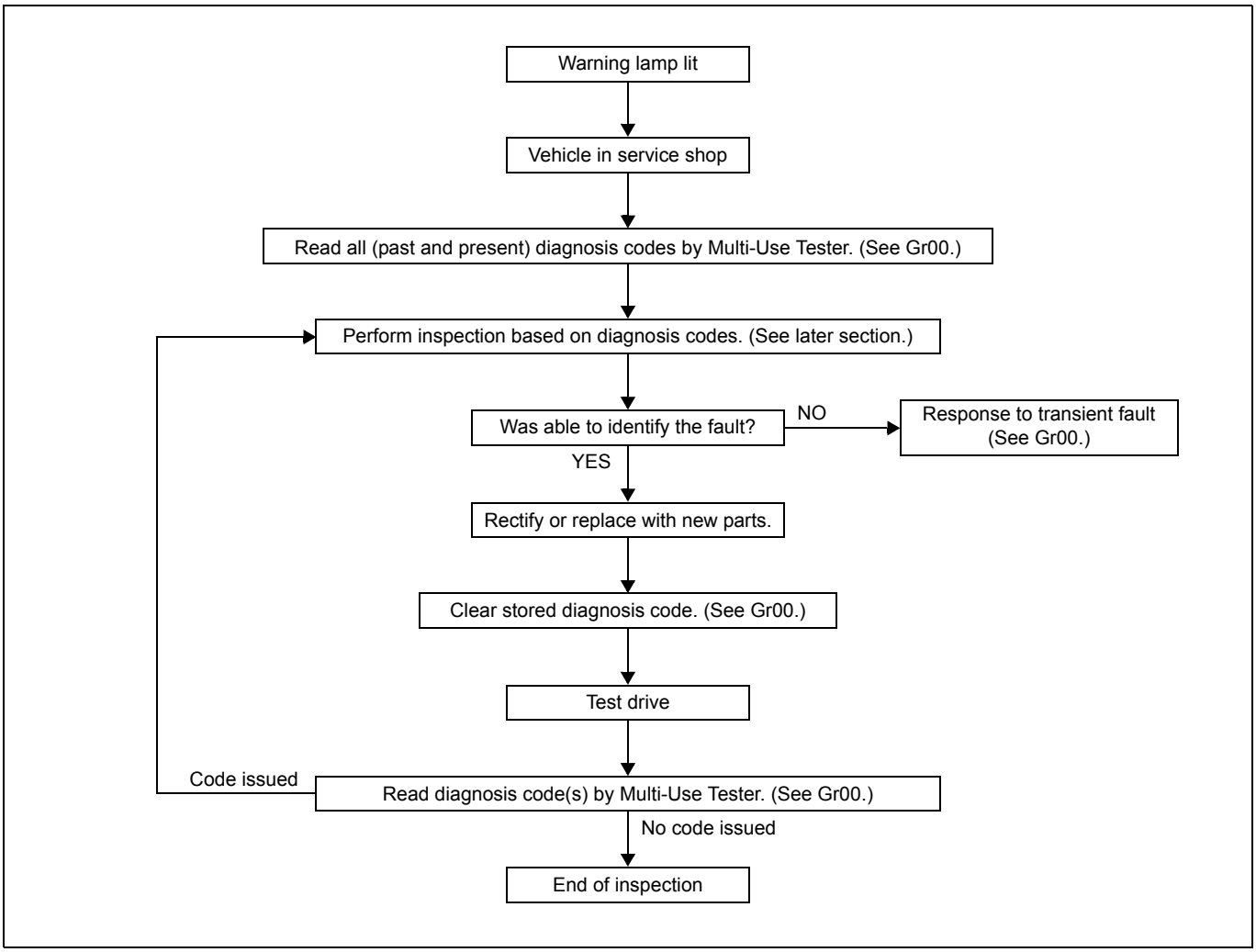

2. Diagnostic Precautions

- Before measuring voltage, check the charge and specific gravity of the battery. If system inspection is performed with the battery uncharged or reduced in specific gravity, accurate measurements cannot be achieved.
- Before disconnecting battery cables, harnesses and connectors, set the starter switch to LOCK or OFF, then allow at least 20 seconds.
- To avoid having electrical parts damaged, set the starter switch and lighting switch to LOCK or OFF before reconnecting battery cables, harnesses and connectors.
- When performing measurement with the tester, internal circuit and other electrical parts of the electronic control unit could be damaged by the test bar. To avoid it, handle the test bar carefully not to cause a short-circuit failure between connector terminals or between connector and body.
- Resistance is affected by temperature. Determine the necessity of resistance measurement by reference to given temperature specification as a guide. Otherwise, use normal temperature (10 to 35°C {50 to 95°F}) as the measuring condition.
- If the MVCU is replaced with a new one, some data must be registered in the new MVCU for proper engine control. This also applied to the case when replacing the MVCU with the one that has been used in other vehicle. (See “6. Works Required When Replacing the Multifunction Vehicle Control Unit (MVCU)”.)

3. Inspection Based on Diagnosis Codes

3.1 List of diagnosis codes

NOTE

- **Diagnosis codes are different in kind between the Multi-Use Tester and blinking warning lamp.**
- **The Multi-Use Tester issues diagnosis codes that tell more in detail.**

Code	Message	Warning lamp blinking
–	OK	01
P0500	Vehicle Speed Sensor	06
P0504	Brake SW	11
P1002	Battery Voltage	02
P1003	Battery Terminal	03
P1004	Main Voltage	04
P1007	MVCU	07
P1008	Vehicle Identification	08
P1009	Non Coding	09
P1016	Cruise Variation Identify	16
U0100	CAN Communication	05
U1013	Engine ECU Cruise Control	13
U1031	Engine ECU Speed Limiting	31

3.2 Diagnosis code generation conditions and inspection items

P0500: Vehicle Speed Sensor (Warning lamp: 06)

Generation condition		Engine speed at 1000 rpm or higher, clutch pedal released, transmission neutral switch in ON position and the vehicle speed at 0.75 km/h {0.47 MPH} or lower.
Recoverability		System recovers (power is re-supplied to electronic control unit) if signal becomes normal when starter switch is turned OFF → ON.
Control effected by electronic control unit		• Auto cruise control and vehicle speed limiting (SLD) control is suspended. • Occurrence of trouble with vehicle speed limiting function sent through CAN bus.
Inspection	Service data	03: Vehicle Speed
	Electronic control unit connector	01: Vehicle speed sensor
	Electrical equipment	#265: Vehicle speed sensor
	Electric circuit diagram	Vehicle sensor system

P0504: Brake SW (Warning lamp: 11)

Generation condition		Stop lamp switch (H1, H2) signals are not identical.
Recoverability		System recovers (power is re-supplied to electronic control unit) if signal becomes normal when starter switch is turned OFF → ON.
Control effected by electronic control unit		• Auto cruise control is suspended. • Vehicle speed limiting (SLD) control is continued.
Inspection	Service data	24: Brake SW 1, 25: Brake SW 2
	Electronic control unit connector	02: Stop lamp switch
	Electrical equipment	#042: Stop lamp switch
	Electric circuit diagram	Stop lamp system

P1002: Battery Voltage (Warning lamp: 02)

Generation condition		MVCU power terminal (direct from battery) voltage is lower than 10 V for approx. 10 seconds.
Control effected by electronic control unit		Auto cruise control and vehicle speed limiting (SLD) control is continued.
Inspection	Service data	01: Power Supply Voltage (BATTERY)
	Electric circuit diagram	Power supply system
	Other	• Battery (See Gr54.) • Alternator (See Gr54.)

P1003: Battery Terminal (Warning lamp: 03)

Generation condition		MVCU power terminal (direct from battery) voltage is lower than 4 V for approx. 5 seconds.
Control effected by electronic control unit		Auto cruise control and vehicle speed limiting (SLD) control is continued.
Inspection	Service data	01: Power Supply Voltage (BATTERY)
	Electric circuit diagram	MVCU connector (CY31A) terminal No. 21 and No. 31 system
	Other	Battery (See Gr54.)

P1004: Main Voltage (Warning lamp: 04)

Generation condition		MVCU power terminal (starter switch ON) voltage is lower than 10 V for approx. 10 seconds.
Control effected by electronic control unit		Auto cruise control and vehicle speed limiting (SLD) control is continued.
Inspection	Service data	02: Power Supply Voltage (MAIN)
	Electric circuit diagram	Starter switch (M terminal) system
	Other	• Battery (See Gr54.) • Alternator (See Gr54.)

P1007: MVCU (Warning lamp: 07)

Generation condition		Faulty CPU (processor) in MVCU
Recoverability		System recovers (power is re-supplied to electronic control unit) if signal becomes normal when starter switch is turned OFF → ON.
Control effected by electronic control unit		• Auto cruise control and vehicle speed limiting (SLD) control is suspended. • Occurrence of trouble with vehicle speed limiting function sent through CAN bus.
Inspection	Other	Malfunction vehicle control unit proper

P1008: Vehicle Identification (Warning lamp: 08)

Generation condition		Identification start condition continued for predetermined time after starting the vehicle identification but the vehicle identification remained unidentified.
Recoverability		System recovers (power is re-supplied to electronic control unit) if signal becomes normal when starter switch is turned OFF → ON.
Control effected by electronic control unit		• Auto cruise control and vehicle speed limiting (SLD) control is suspended. • Occurrence of trouble with vehicle speed limiting function sent through CAN bus.
Inspection	Service data	13: Cruise Variation Number
	Electric circuit diagram	Write data in MVCU. (Refer to “Works Required When Replacing the Multifunction Vehicle Control Unit (MVCU)”.)

P1009: Non Coding (Warning lamp: 09)

Generation condition		Data has not written in MVCU.
Recoverability		System recovers after writing data in MVCU.
Control effected by electronic control unit		• Auto cruise control and vehicle speed limiting (SLD) control is suspended. • Occurrence of trouble with vehicle speed limiting function sent through CAN bus.
Inspection	Other	Write data in MVCU. (Refer to “Works Required When Replacing the Multifunction Vehicle Control Unit (MVCU)”.)

P1016: Cruise Variation Identify (Warning lamp: 16)

Generation condition		The vehicle identification and auto cruise control do not match.
Recoverability		System recovers (power is re-supplied to electronic control unit) if signal becomes normal when starter switch is turned OFF → ON.
Control effected by electronic control unit		• Auto cruise control is suspended. • Vehicle speed limiting (SLD) control is continued.
Inspection	Service data	13: Cruise Variation Number
	Other	Write data in MVCU. (Refer to “Works Required When Replacing the Multifunction Vehicle Control Unit (MVCU)”.)

U0100: CAN Communication (Warning lamp: 05)

Generation condition		No CAN data is received from the engine electronic control unit for approx. 2 seconds.
Recoverability		System recovers (power is re-supplied to electronic control unit) if signal becomes normal when starter switch is turned OFF → ON.
Control effected by electronic control unit		• Auto cruise control and vehicle speed limiting (SLD) control is suspended. • Occurrence of trouble with vehicle speed limiting function sent through CAN bus.
Inspection	Electrical equipment	CAN communication system

U1013: Engine ECU Cruise Control (Warning lamp: 13)

Generation condition		When either condition is met. ① : The vehicle speeds recognized by Multifunction Vehicle Control Unit (MVCU) and by engine electronic control unit do not match for 2 seconds. ② : Faulty auto cruise control function under the engine electronic control unit is noticed through CAN communication.
Recoverability		System recovers (power is re-supplied to electronic control unit) if signal becomes normal when starter switch is turned OFF → ON.
Control effected by electronic control unit		• Auto cruise control is suspended. • Vehicle speed limiting (SLD) control is continued.
Inspection	Electronic control unit connector	01: Vehicle speed sensor
	Electrical equipment	#265: Vehicle speed sensor
	Electric circuit diagram	Engine electronic control unit and Multifunction Vehicle Control Unit (MVCU) CAN communication system
	Other	Engine electronic control unit

U1031: Engine ECU SPEED Limiting (Warning lamp: 31)

Generation condition		When either condition is met. ① : The vehicle speeds recognized by Multifunction Vehicle Control Unit (MVCU) and by engine electronic control unit do not match for 2 seconds. ② : Faulty vehicle speed limiting function under the engine electronic control unit is noticed through CAN communication.
Recoverability		System recovers (power is re-supplied to electronic control unit) if signal becomes normal when starter switch is turned OFF → ON.
Control effected by electronic control unit		• Auto cruise control is continued. • Vehicle speed limiting (SLD) control is suspended. • Occurrence of trouble with vehicle speed limiting function sent through CAN bus.
Inspection	Electronic control unit connector	01: Vehicle speed sensor
	Electrical equipment	#265: Vehicle speed sensor
	Electric circuit diagram	Engine electronic control unit and Multifunction Vehicle Control Unit (MVCU) CAN communication system
	Other	Engine electronic control unit

4. Multi-Use Tester Service Data

NOTE

- **Both service data and actuator test results are indicated at the same time.**

No.	Item	Data	Inspection condition	Criterion for normality
01	Power Supply Voltage (BATTERY)	■■.■■ V	Starter switch in ON position	8 to 16 V
02	Power Supply Voltage (MAIN)	■■.■■ V	Starter switch in ON position	8 to 16 V
03	Vehicle Speed	■■■■.MPH	When driving	Synchronous with speedometer
04	Vehicle Speed (Engine Electronic Control Unit)	■■■■.MPH	When driving	Synchronous with speedometer
05	Accel Pedal Position	■■■.■ %	Released	0%
			Gradually pressed	Gradually rising
			Fully pressed	100%
06	Engine Speed	■■■■.rpm	Racing (with engine running)	Synchronous with tachometer
07	Engine Variation ID	■■■■.	Starter switch in ON position	200: 4M50T7 205: 4M50T8
08	Cruise Control Set Speed	■■■■.MPH	During auto cruise driving on a flat road	Equal to vehicle speed in auto cruise mode
12	Limit Vehicle Speed	■■■■.MPH	Vehicle speed limiting function activates with the accelerator pedal pressed	Around limit speed
13	Cruise Variation Number	1/2/3/4/5/6/7/8/9/10/11/12/NON	Starter switch in ON position	Recognized as “2” (with auxiliary brake non-linked cruise function) through the information record feature of MVCU
21	Neutral SW	Neutral/shift	Transmission in neutral	Neutral
			Transmission in other gear than neutral	Shift
22	Clutch SW	ON/OFF	Clutch pedal pressed	ON
			Clutch pedal released	OFF
24	Brake SW 1	ON/OFF	Brake pedal pressed	ON
			Brake pedal released	OFF
25	Brake SW 2	ON/OFF	Brake pedal pressed	ON
			Brake pedal released	OFF
29	Cruise Main SW	ON/OFF	Cruise control main switch ON	ON
			Cruise control main switch OFF	OFF
30	Cruise Set SW	ON/OFF	Set and resume switch SET	ON
			Set and resume switch OFF	OFF
31	Cruise Resume SW	ON/OFF	Set and resume switch RESUME	ON
			Set and resume switch OFF	OFF
34	Diagnosis SW	ON/OFF	Diagnosis switch ON (connector connected)	ON
			Diagnosis switch OFF (connector disconnected)	OFF

No.	Item	Data	Inspection condition	Criterion for normality
35	Memory Clear SW	ON/OFF	Memory clear switch ON (connector connected)	ON
			Memory clear switch OFF (connector disconnected)	OFF
41	Cruise Lamp	ON/OFF	Auto cruise mode	ON
			Normal driving	OFF
			[Actuator test] 51: Cruise Lamp ON 52: Cruise Lamp OFF	
43	System Warning Lamp	ON/OFF	Starter switch in ON position (engine not started)	ON for some seconds
			[Actuator test] 55: System Warning Lamp ON 56: System Warning Lamp OFF	

5. Actuator Tests Performed Using Multi-Use Tester

NOTE

- **Both service data and actuator test results are indicated at the same time.**

No.	Item	Description	Check method
51	Cruise Lamp ON	Auto cruise indicator lamp drive signal	Lighting status of auto cruise indicator lamp [Service data] 41: Cruise Lamp
52	Cruise Lamp OFF		
55	System Warning Lamp ON	Vehicle control warning lamp drive signal	Lighting status of vehicle control warning lamp [Service data] 43: System Warning Lamp
56	System Warning Lamp OFF		

6. Works Required When Replacing the Multifunction Vehicle Control Unit (MVCU)

- When replacing the MVCU with a new one, it is necessary to write the vehicle specification identification data and necessary control parameters for softwares in the new MVCU. Otherwise the system cannot operate correctly, resulting in faulty system.
- For data writing operation, ask your nearest MITSUBISHI FUSO dealer or MITSUBISHI FUSO TRUCK OF AMERICA, Inc.

7. Inspections Performed at Electronic Control Unit Connectors

- These inspections aid troubleshooting by enabling you to check whether electronic control unit signals are being correctly transmitted via the vehicle harness and connectors.
  The white-on-black numbers (01, 02 and so on) correspond to the similarly printed reference numbers in section "**3. Inspection Based on Diagnosis Codes**".

7.1 Electronic control unit connector terminal arrangement

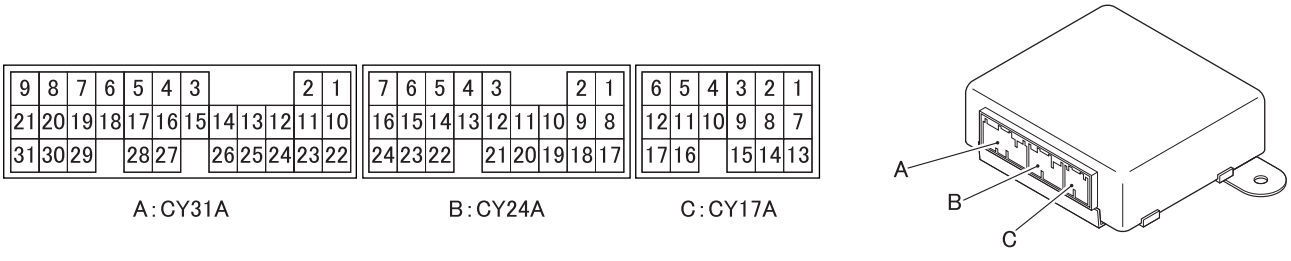

P101774

7.2 Inspection procedure

CAUTION ⚠

- **Depending on check items, checking is performed with connector disconnected or left connected.**
- **Be sure to not touch any other connector terminal than involved in the check. Use extra care so that connector terminals are not shorted by the tester.**

Check item	Check method
01 Vehicle speed sensor signal voltage	[Conditions] • Starter switch is in ON position. • Vehicle-side harness is left connected (checked from behind the connector.) • Wheels are slowly rotated using chassis dynamo or the like. [Criteria] Between terminals (+) - (–): A23-chassis grounding • High pulse voltage: Approx. 8 ± 1 V • Low pulse voltage: 0.5 V or less
02 Stop lamp switch continuity	[Conditions] • Starter switch in OFF position. • Connector disconnected; check at vehicle-side connector [Criteria] Between terminals: B12 or B13-chassis grounding • When brake pedal pressed: Continuity established • When brake pedal released: No continuity

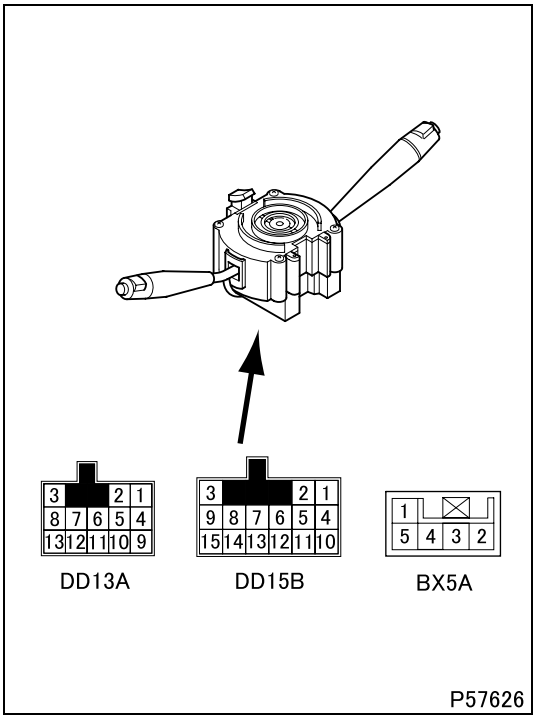

#001 Combination switch inspection

BX5A connector connection table

Switch position		Terminal continuity
Set & resume switch and cancel switch	SET	2 – 3
	CANCEL	3 – 5
	OFF	–
	RESUME	3 – 4

- Replace the switch if found abnormal.

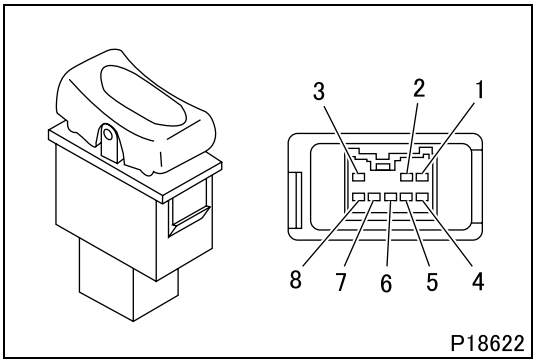

#007 Auto cruise main switch inspection

Switch position	Terminal continuity	Operational illumination
ON	3 – 5, 7 – 8	(+) 4 – 1 (–)
N (Neutral)	3 – 5	–
OFF	–	–

- Replace the switch if found abnormal.

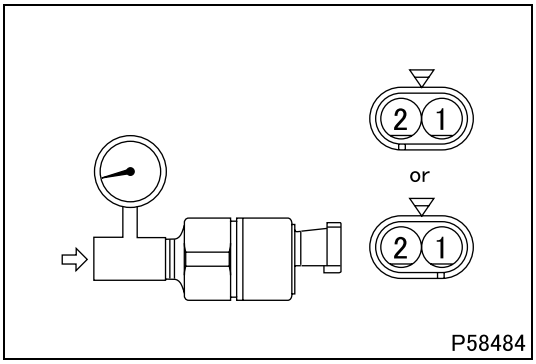

#042 Stop lamp switch

- Inspect the switch as follows, and replace it if found abnormal.

(1) Inspection without air pressure applied

- Check that there is no continuity between terminals 1 and 2.

(2) Inspection with air pressure applied

- Apply air pressure slowly increasing from 0 kPa {0 psi, 0 kgf/cm^2}.
- Measure air pressure at the point of continuity being established between terminals 1 and 2, to see if it is within the specified limit of standard value.

Standard value (operating pressure)	29 ± 9.8 kPa {4.3 ± 1.4 psi, 0.3 ± 0.1 kgf/cm^2}

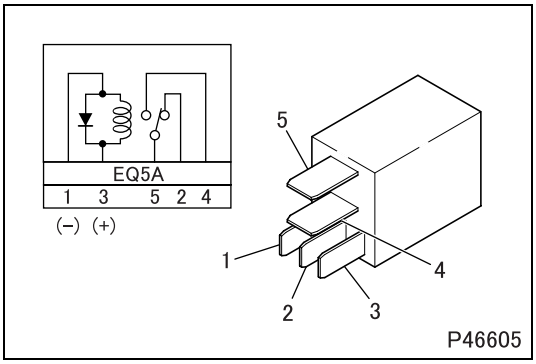

#201 Relay inspection (normally open 5-pin)

- Check the relay for continuity and function. Replace the relay if found abnormal.

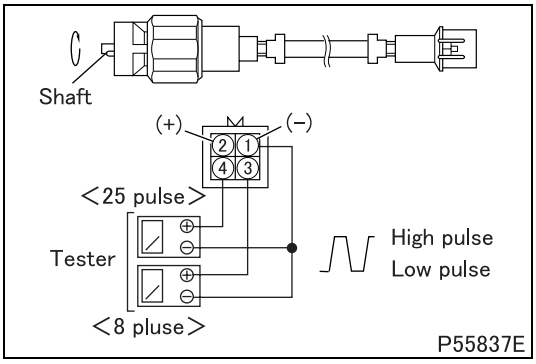

#265 Vehicle speed sensor inspection

- Slowly rotate the shaft of the vehicle speed sensor with battery voltage applied between terminals 1 and 2 of the sensor.
- Measure maximum value (high pulse voltage) and minimum value (low pulse voltage) of the voltage generated at each terminal.

Standard value	Between 8-pulse output terminals 1 and 3	Low pulse voltage	1.5 V or less
		High pulse voltage	Input voltage (battery): –0.5 V or more
	Between 25-pulse output terminals 1 and 4	Low pulse voltage	0.5 V or less
		High pulse voltage	8 ± 1 V

- If measurements deviate from the specified standard values, replace the sensor.

INSTALLED LOCATIONS OF PARTS

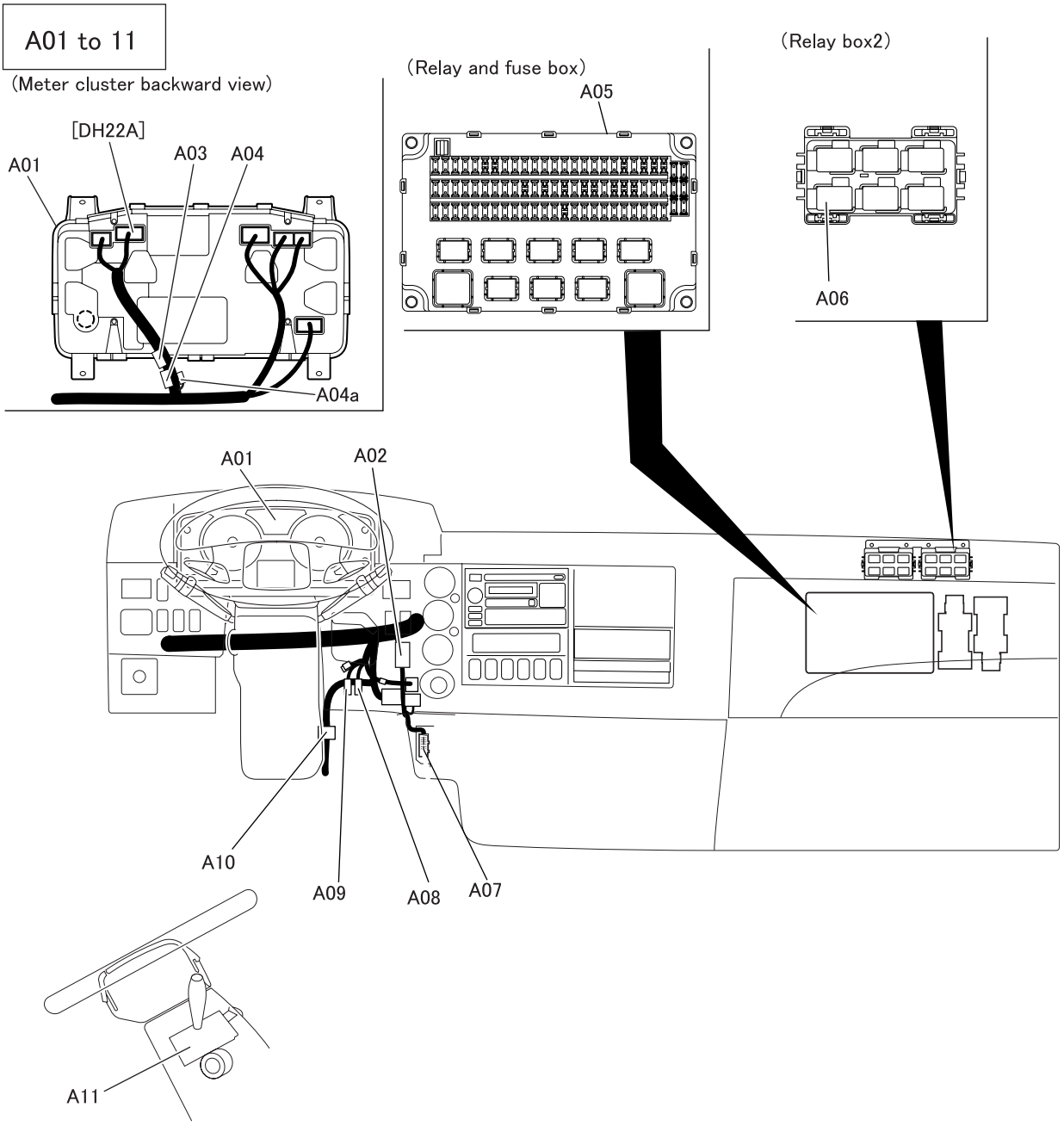

A01 Meter cluster
A02 Cruise control main switch
A03 Joint connector (J/C-2)
A04 Joint connector (J/C-6)
A04a CAN resistor
A05 Relay and fuse box
A06 Cruise control main relay
A07 Diagnostic connector
A08 Diagnosis switch
A09 Memory clear switch
A10 Connection of cab harness and headlamp harness
A11 Combination switch

Indicate by connector type [ ].

L02667

A25 to 28

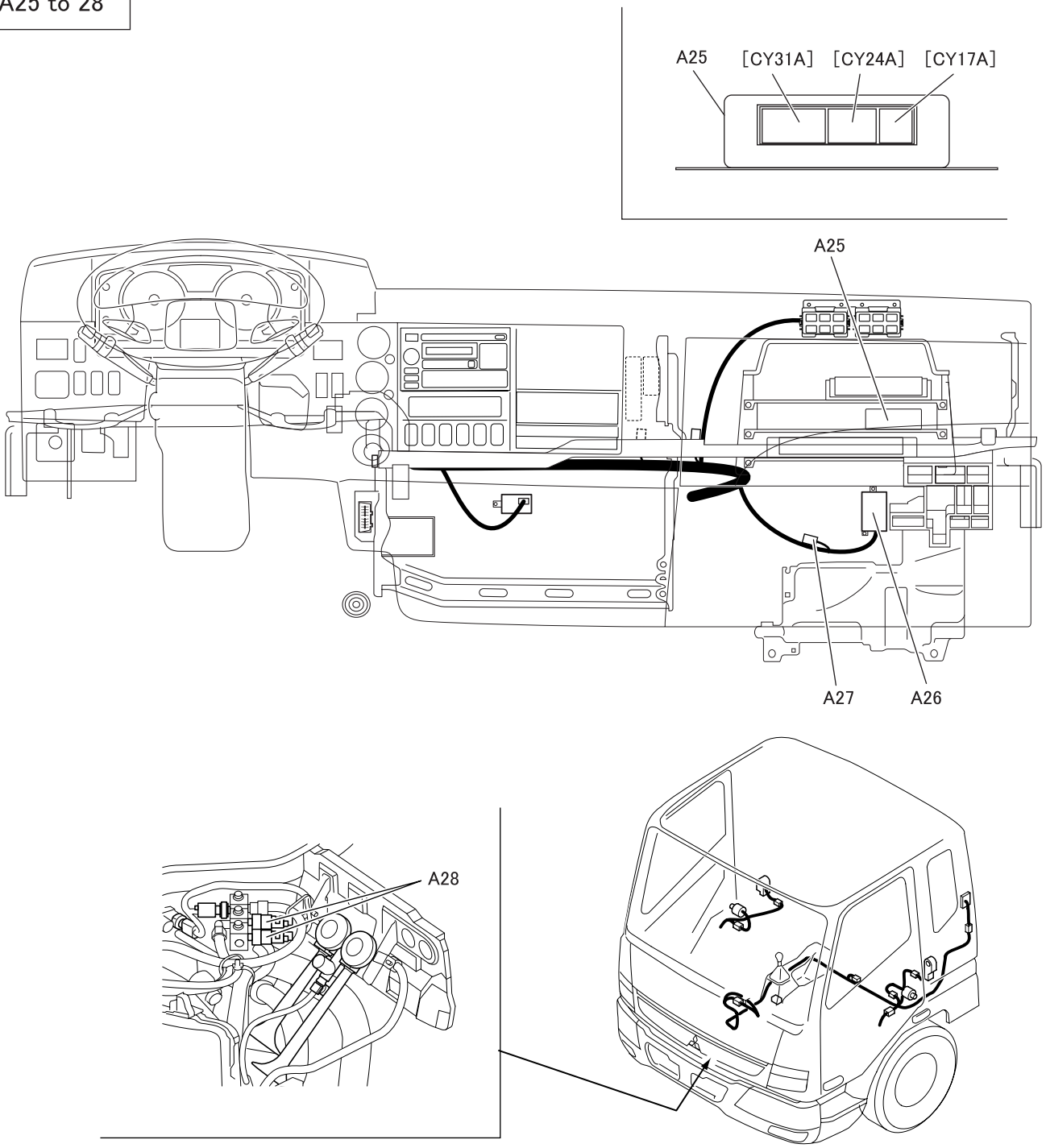

A25 MVCU
A26 Pulse converter
A27 Diode unit
A28 Stop lamp switch

MVCU : Multifunction vehicle control unit

Indicate by connector type [ ].

INSTALLED LOCATIONS OF PARTS

A36 to 39

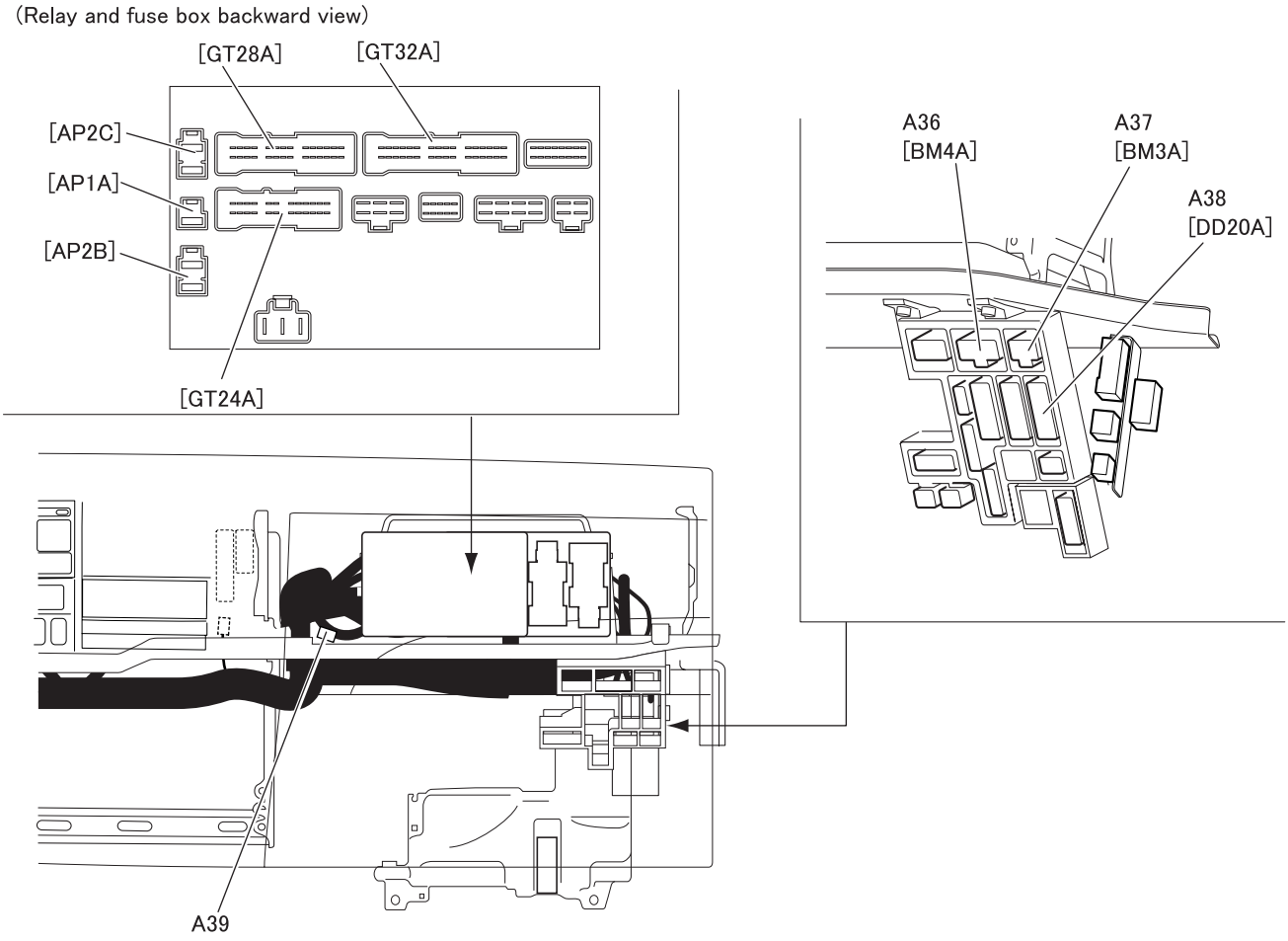

A36–38 Connection of cab harness and chassis harness
A39 Joint connector (J/C–1, 4)

L02670

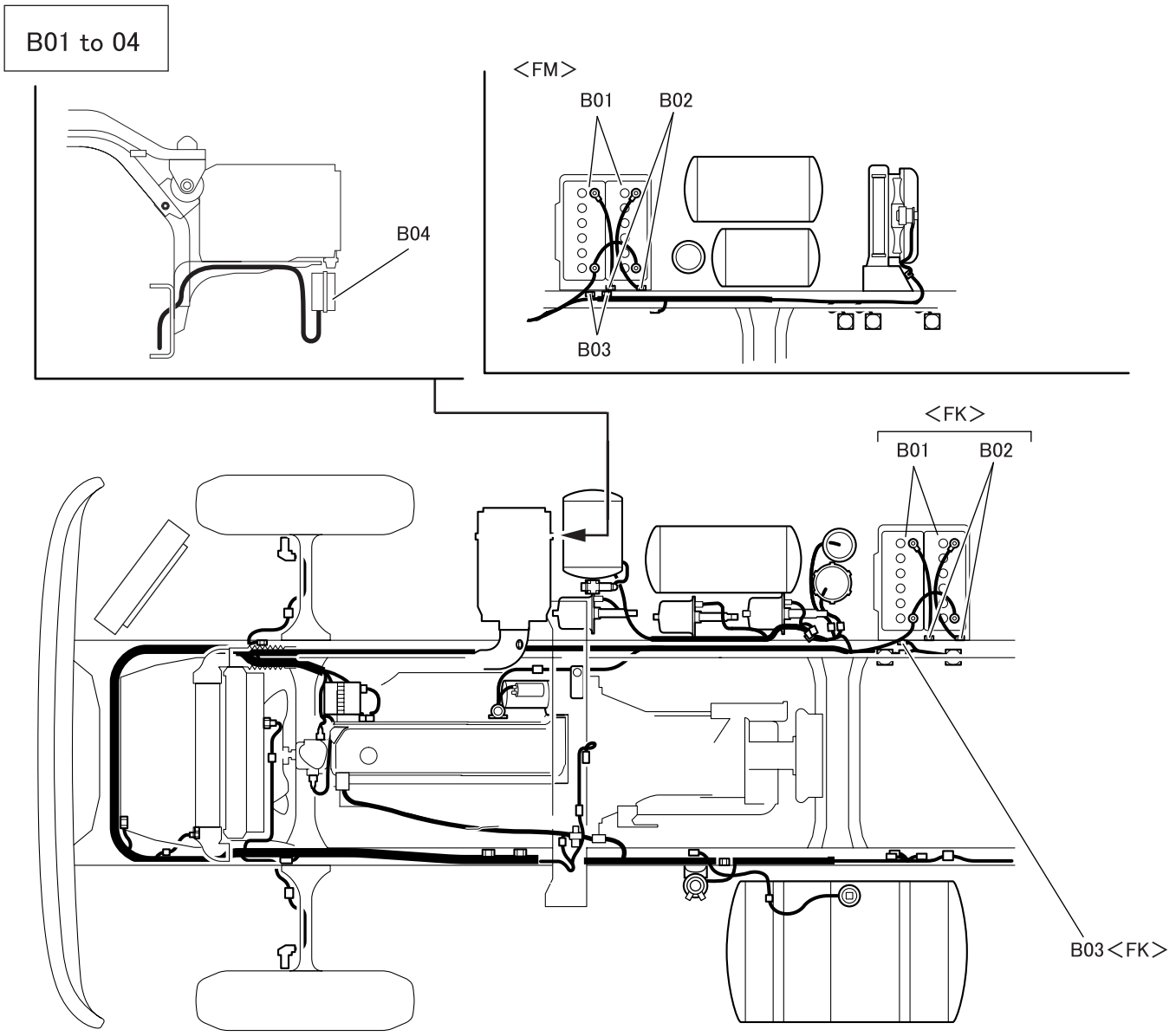

B01 Battery
B02 Ground
B03 Ground
B04 High-current fuse box

INSTALLED LOCATIONS OF PARTS

C01

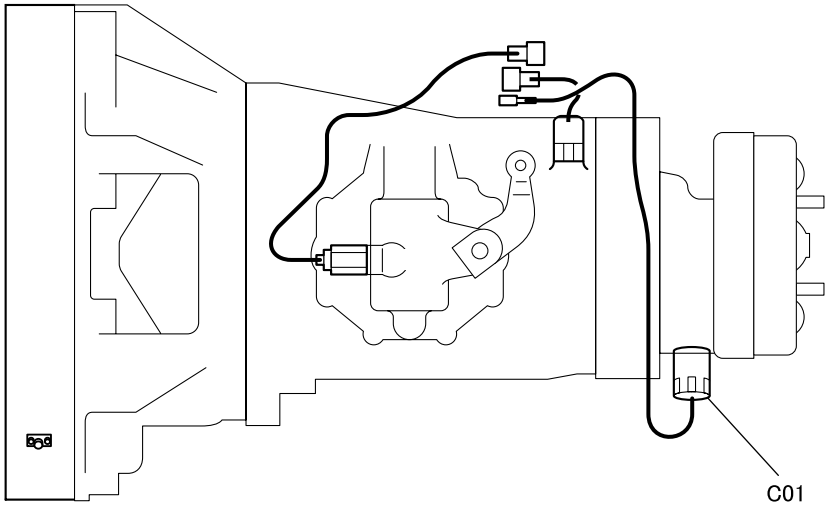

C01 Vehicle speed sensor

L02671

M E M O

ELECTRIC CIRCUIT DIAGRAM

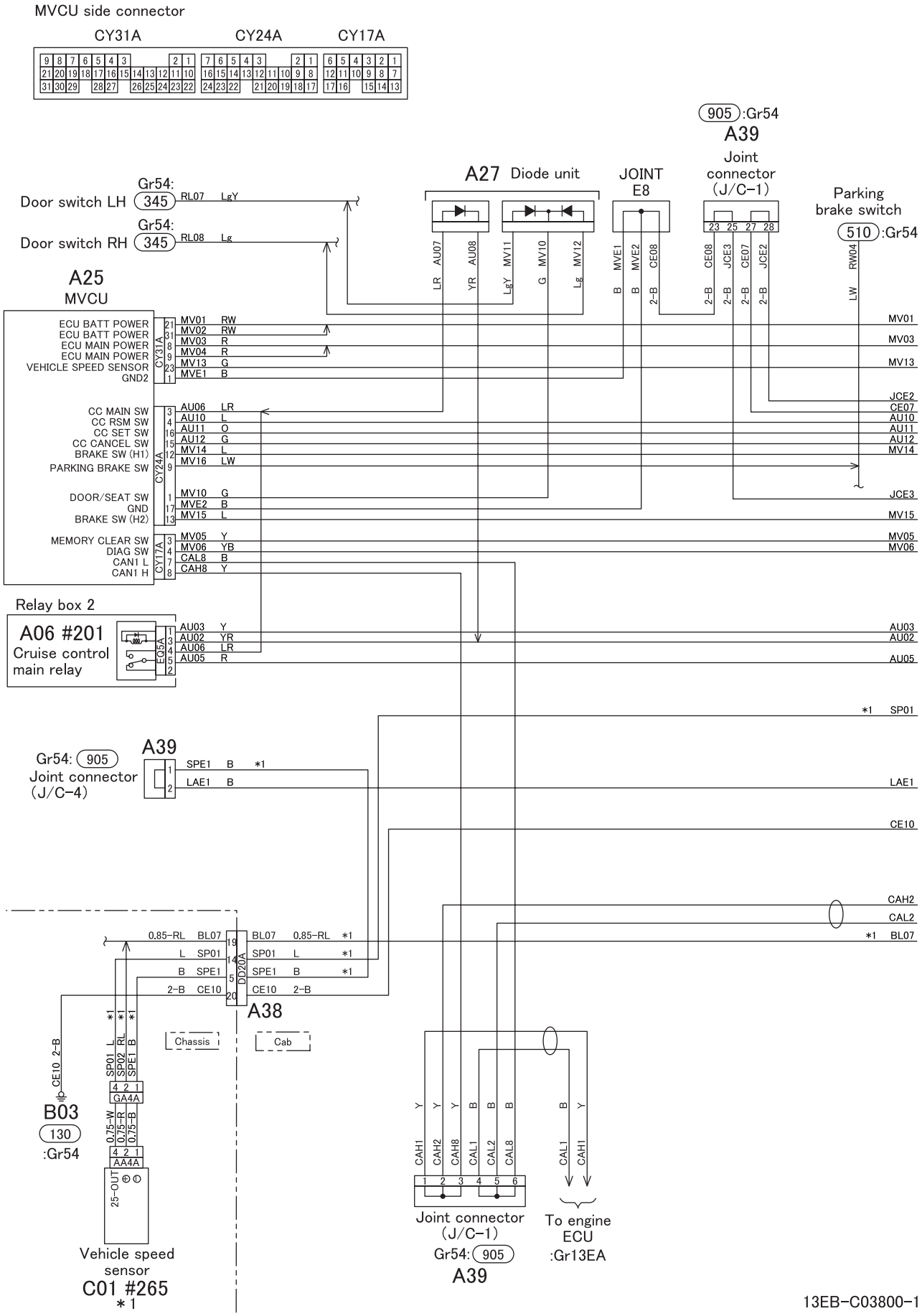

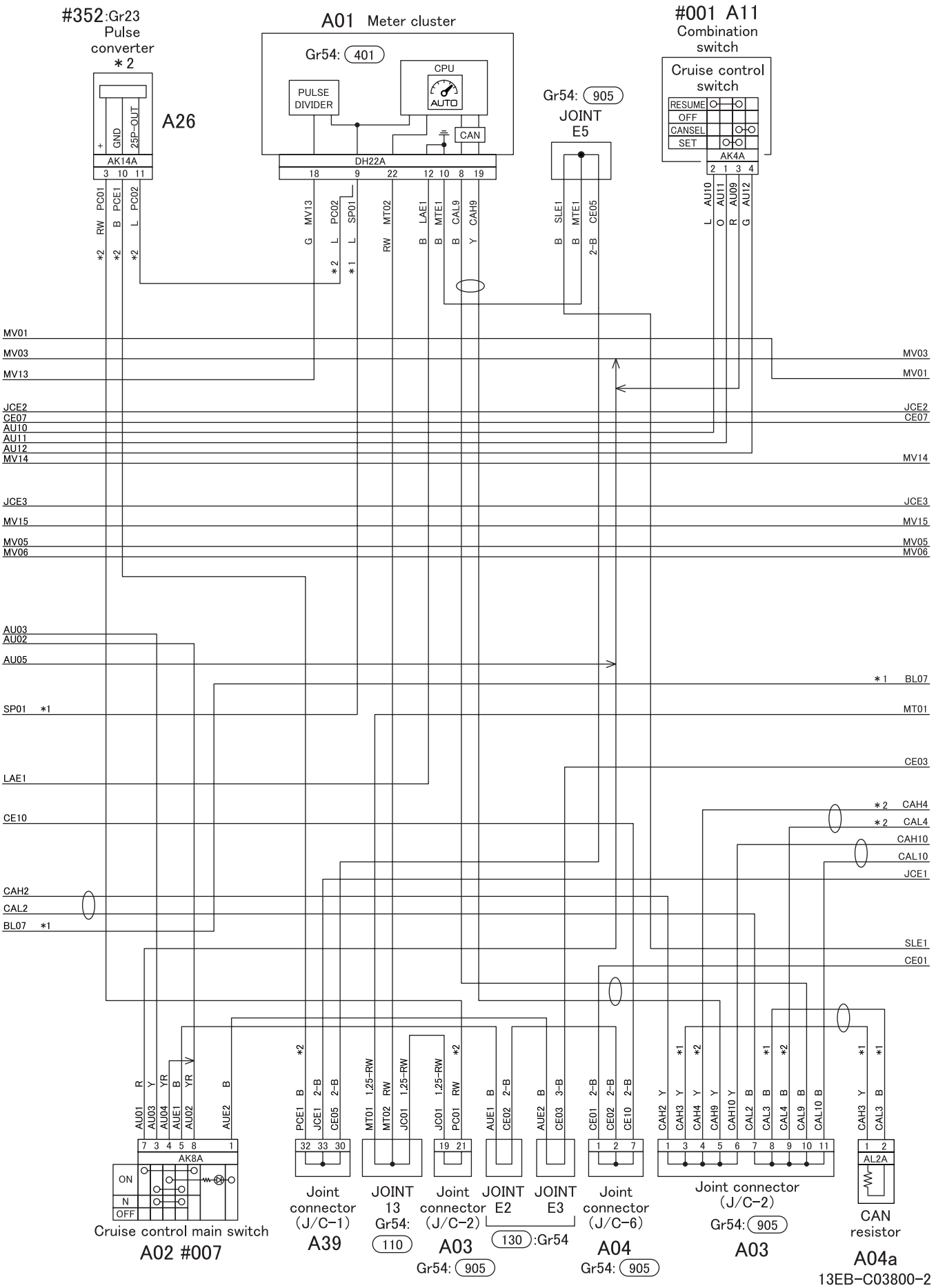
#352:Gr23
Pulse converter
*2
A26
+
GND
25P-OUT
AK14A
3 10 11
A01 Meter cluster
Gr54: 401
PULSE DIVIDER
CPU
AUTO
CAN
DH22A
18 9 22 12 10 8 19
Gr54: 905
JOINT E5
#001 A11
Combination switch
Cruise control switch
RESUME
OFF
CANSEL
SET
AK4A
2 1 3 4
PC01 RW *2
PCE1 B *2
PC02 L *2
MV13 G
PC02 L *2
SP01 L *1
MT02 RW
LAE1 B
MTE1 B
CAL9 B
CAH9 Y
SLE1 B
MTE1 B
CE05 2-B
AU10 L
AU11 O
AU09 R
AU12 G
MV01
MV03
MV13
JCE2
CE07
AU10
AU11
AU12
MV14
JCE3
MV15
MV05
MV06
AU03
AU02
AU05
SP01 *1
LAE1
CE10
CAH2
CAL2
BL07 *1
*1 BL07
MT01
CE03
*2 CAH4
*2 CAL4
CAH10
CAL10
JCE1
SLE1
CE01
AU01 R
AU03 Y
AU04 YR
AUE1 B
AU02 YR
AUE2 B
7 3 4 5 8 1
AK8A
ON
N
OFF
Cruise control main switch
A02 #007
PCE1 B *2
JCE1 2-B
CE05 2-B
32 33 30
Joint connector (J/C-1)
A39
MT01 1.25-RW
MT02 RW
JC01 1.25-RW
19 21
JOINT 13
Gr54: 110
JC01 1.25-RW
PC01 RW *2
Joint connector (J/C-2)
A03
Gr54: 905
AUE1 B
CE02 2-B
AUE2 B
CE03 3-B
JOINT E2
JOINT E3
130 :Gr54
A03
CE01 2-B
CE02 2-B
CE10 2-B
1 2 7
Joint connector (J/C-6)
A04
Gr54: 905
CAH2 Y *1
CAH3 Y *2
CAH4 Y
CAH9 Y
CAH10 Y
CAL2 B
CAL3 B *1
CAL4 B *2
CAL9 B
CAL10 B
1 3 4 5 6 7 8 9 10 11
Joint connector (J/C-2)
Gr54: 905
A03
CAH3 Y *1
CAL3 B *1
1 2
AL2A
CAN resistor
A04a
13EB-C03800-2

ELECTRIC CIRCUIT DIAGRAM

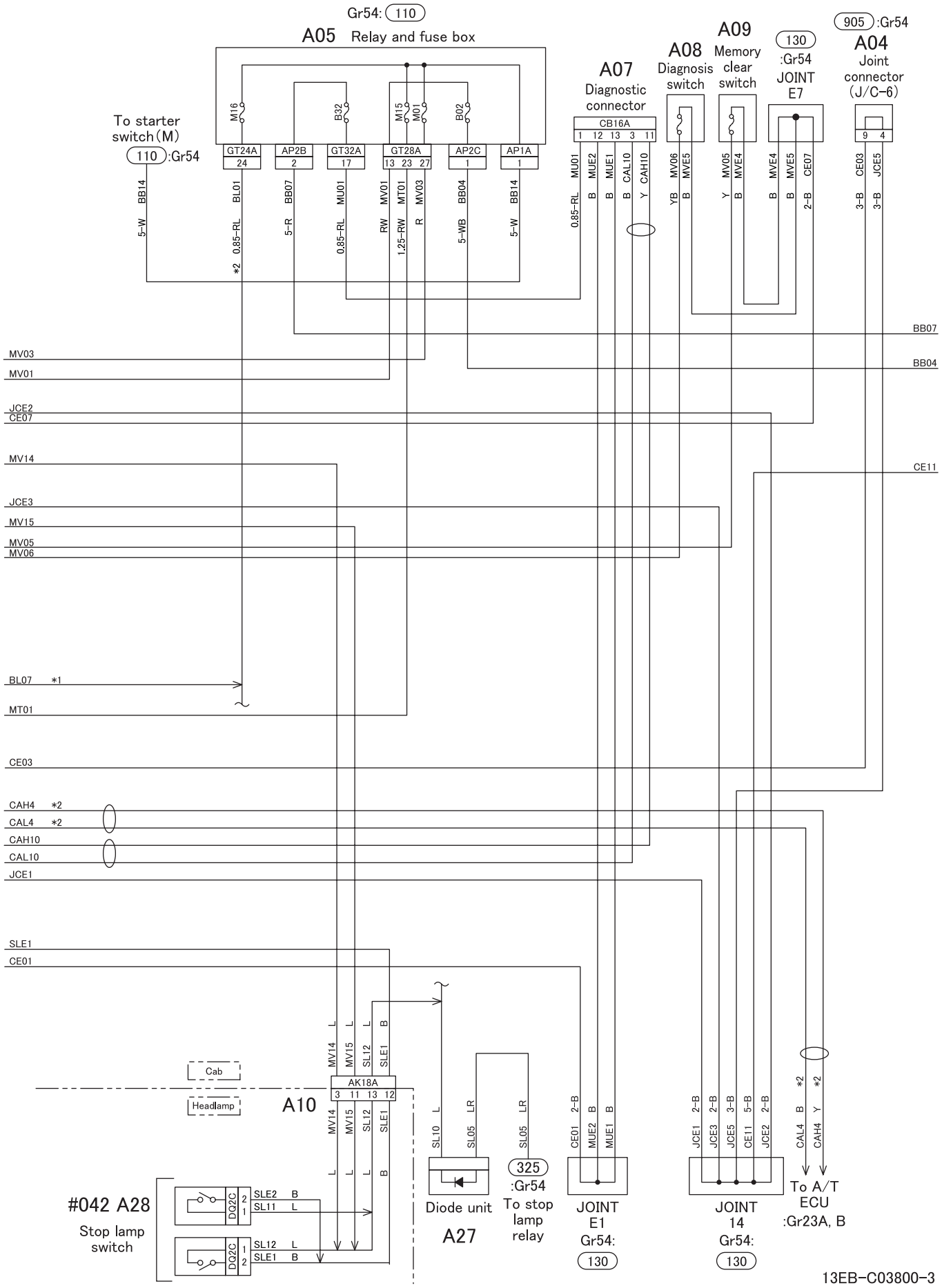

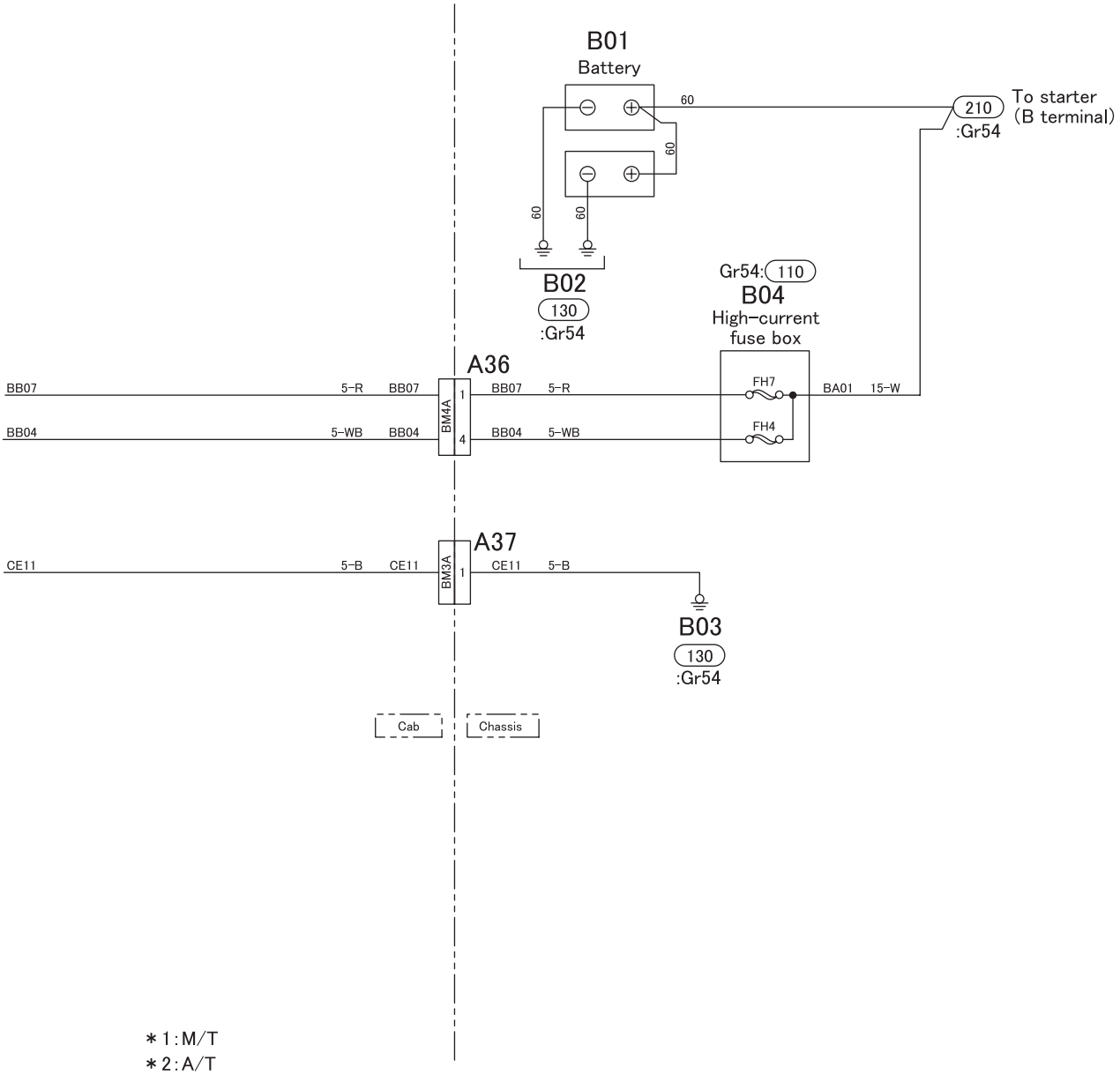

＊1：M/T
＊2：A/T

A/T：Automatic transmission
M/T：Manual transmission
MVCU：Multifunction vehicle control unit
ECU：Electronic control unit

; Twist wire

Group 14

Cooling

Table of Contents

Back

Home

MITSUBISHI FUSO TRUCK OF AMERICA, Inc.

Pub.No.TWME0709-14

INDEX

SPECIFICATIONS 14-2

STRUCTURE AND OPERATION
1. Cooling System (Flow of Coolant) 14-3
2. Thermostat 14-4
3. Water Pump 14-4

TROUBLESHOOTING 14-5

ON-VEHICLE INSPECTION AND ADJUSTMENT
1. Inspection and Adjustment of Belt Tension 14-6
2. Inspection of Cracks or Damage of the Belt 14-8
3. Coolant Replacement and Cleaning of Cooling System 14-9
4. Air Bleeding of Cooling System 14-11
5. Gas Leakage Test 14-11

DISCONNECTION AND CONNECTION OF HOSES AND PIPES 14-12

RADIATOR AND FAN SHROUD 14-16

COOLING FAN, BELT AND WATER PUMP 14-26

THERMOSTAT 14-28

SPECIFICATIONS

Item	Specifications
Cooling system	Forced water circulation system
Water pump	Belt-driven type
Thermostat	Wax pellet, bottom bypass type (with jiggle valve)
Automatic cooling fan coupling	Continuous control type
Radiator	Tube and corrugated fin type
Coolant capacity L {qts}	25 {26}

1. Cooling System (Flow of Coolant)

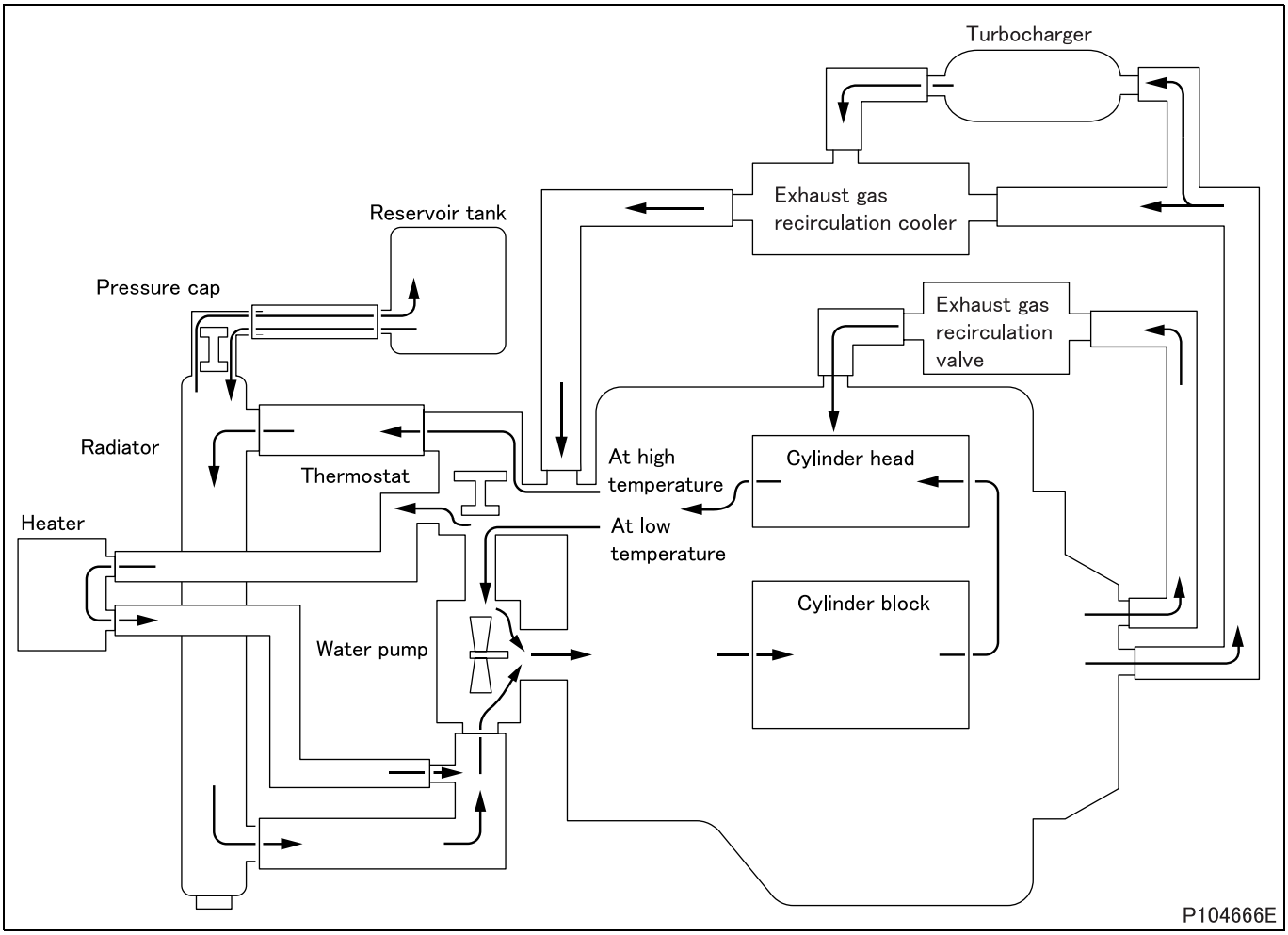

2. Thermostat

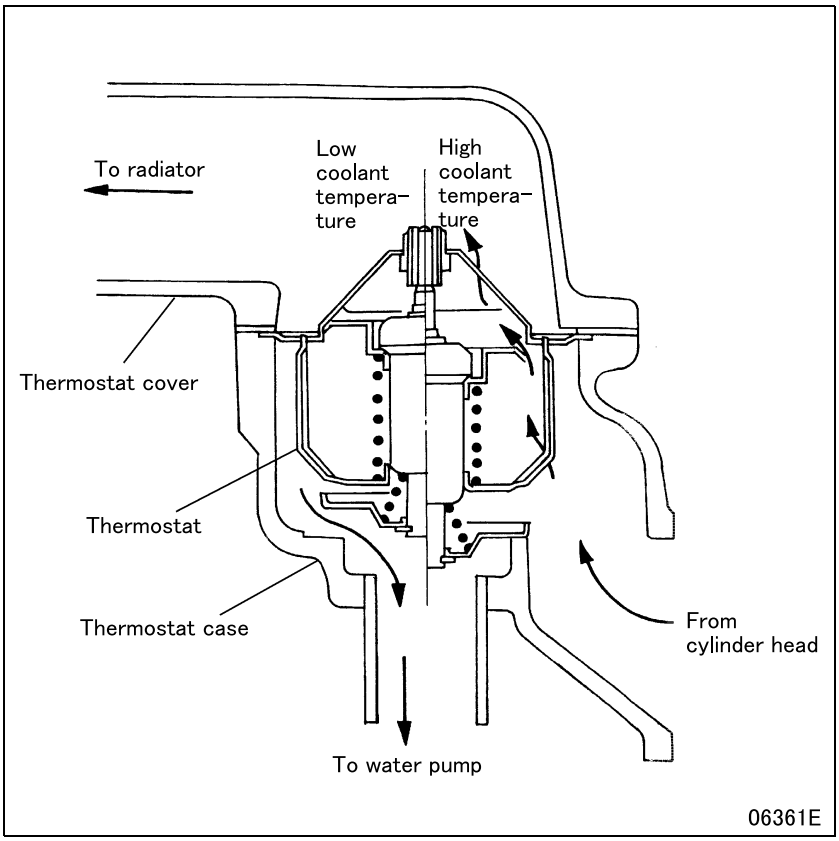

- The thermostat is a bottom bypass type that uses a wax-filled pellet as its flow-regulating element. When the wax is heated, it melts from solid to liquid, changing its total volume. This allows the valve to open or close in accordance with the coolant temperature, regulating and adjusting the flow of coolant to the radiator and to the water pump (bypassing the radiator).

3. Water Pump

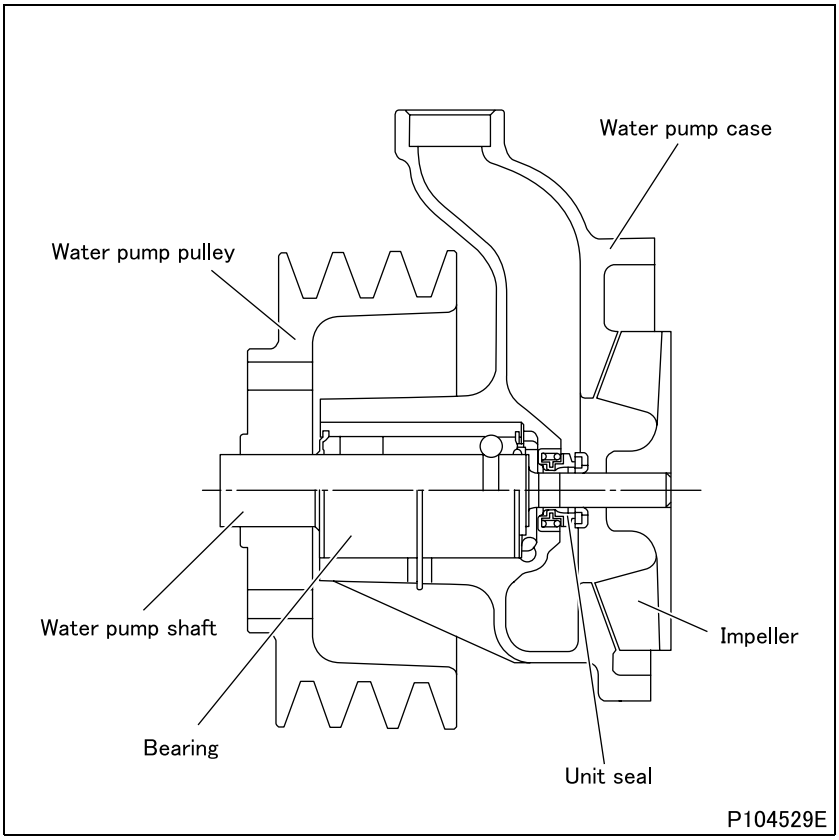

- The water pump has a drain hole to prevent coolant from entering the unit bearing in case of a defect in the unit seal.

Possible causes \ Symptoms		Overheating (poor cooling)	Overcooling	Abnormal noise	Excessive coolant loss	Reference Gr
Belt	Loose or damaged	O		O		
	Excessive tension			O		
	Oil on belt	O				
Water pump	Incorrectly mounted water pump	O			O	
	Defective gasket	O			O	
	Defective unit bearing	O		O		
	Defective impeller	O				
	Defective unit seal	O			O	
	Fit of unit bearing on flange and impeller too loose	O		O		
Thermostat	Incorrectly mounted case	O			O	
	Defective gasket	O			O	
	Valve opening temperature too high (valve remains closed)	O				
	Valve opening temperature too low (valve remains open)		O			
Radiator	Clogged core	O				
	Cracked core and/or separation in welds	O			O	
Automatic cooling fan coupling	Defective bearing	O		O		
	Damaged bimetal	O				
	Contaminated bimetal	O	O			
	Silicon oil leakage	O		O		
Oil cooler	Incorrectly mounted oil cooler	O			O	Gr12
	Defective gasket	O			O	
Cylinder head	Incorrectly mounted cylinder head	O			O	Gr11
	Defective gasket	O			O	
Poorly airtight pressure cap		O				
Water leaking from water level sensor		O			O	
Coolant quantity insufficient and/or coolant dirty		O				
Coolant passages dirty and/or clogged		O				
Hoses fitted poorly		O			O	
Ambient temperature extremely low			O			

ON-VEHICLE INSPECTION AND ADJUSTMENT

1. Inspection and Adjustment of Belt Tension

CAUTION ⚠

- **Make sure that there is no oil or grease on the belts. Belts soiled with oil or grease may easily slip, resulting in deteriorated performance of the cooling system.**

Service standards (Unit: mm {in.})

Location	Maintenance item		Standard value	Limit	Remedy
–	Belt tension	for air conditioner	7 to 10 {0.28 to 0.39}	–	Adjust
		for fan	10 to 15 {0.39 to 0.59}		

Tightening torque (Unit: N·m {ft.lbs, kgf·m})

Mark	Parts to be tightened	Tightening torque	Remarks
–	Bolt (alternator mounting)	50 {37, 5.1}	–
–	Nut (tension pully mounting)	90 {66, 9.2}	–

Special tools

Mark	Tool name and shape	Part No.	Application
ⓒa	Belt tension gauge P03612	MH062345	Measurement of tension of belt

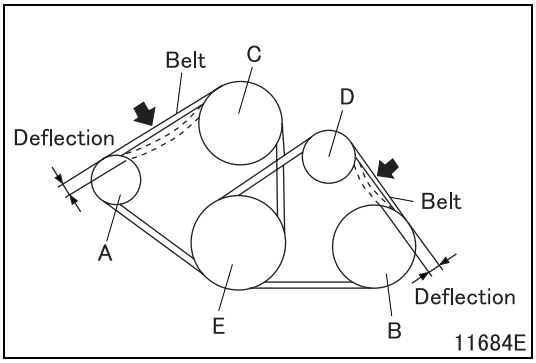

[Inspection]

- Press each belt at a central portion between pulleys with a force of approximately 98 N {72 lbs, 10 kgf} as shown in the illustration and measure the amount of deflection of the belt.
  - A: Alternator pulley
  - B: Air conditioner compressor pulley
  - C: Water pump pulley
  - D: Tension pulley
  - E: Crankshaft pulley

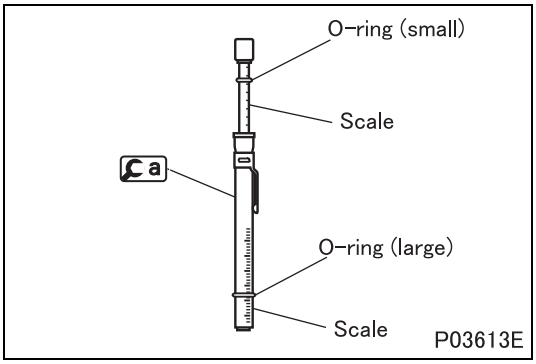

- Place the small O-ring on ⓒa at the scale mark corresponding to 98 N {72 lbs, 10 kgf} (press force).
- Place the large O-ring on ⓒa at the scale mark corresponding to the maximum permissible deflection value specified for the belt.

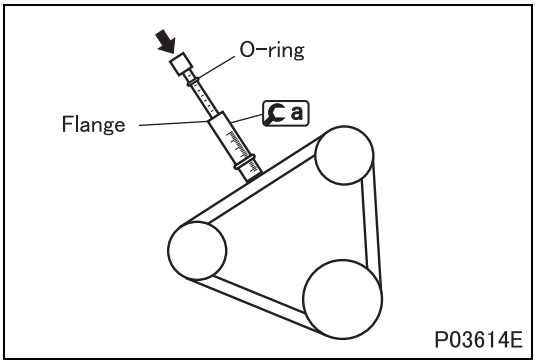

- Place a at a central portion between pulleys of the belt and push the handle (indicated by the arrow in the illustration) until the O-ring touches the flange.

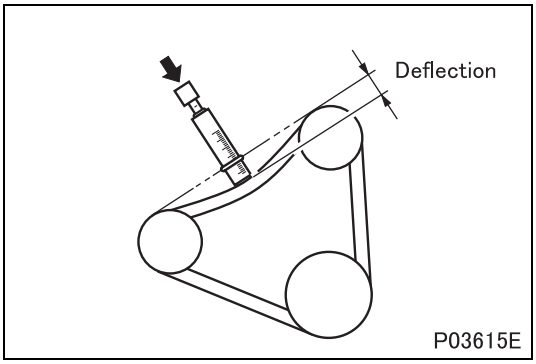

- Measure the amount of deflection of the belt.
- If the measured value deviates from the standard value range, adjust the tension of the belt as follows.

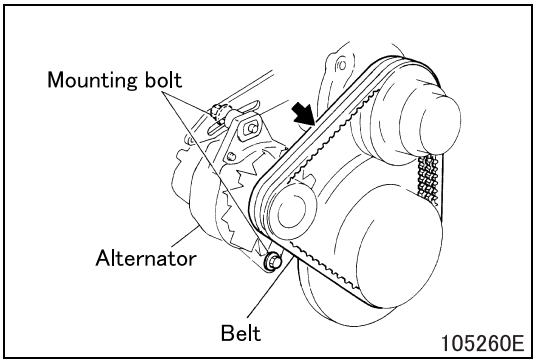

[Adjustment]

(1) Vehicles with air conditioner

- Loosen the alternator mounting bolts (2 locations) and adjust the tension of the belt by tightening or loosening the adjustment bolt.
- After the adjustment is completed, retighten the mounting bolts firmly.

CAUTION ⚠

- **Excessive tension in the belt may damage not only the belt itself but also the bearings of the related components.**

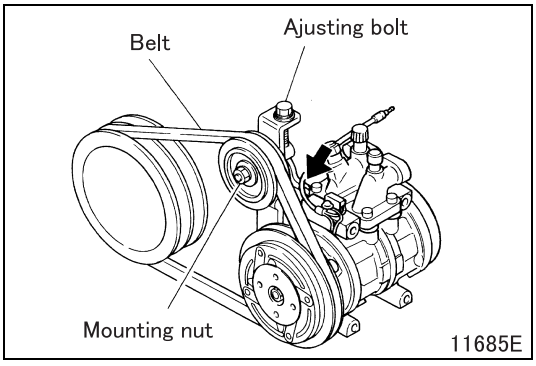

(2) Vehicles without air conditioner

- Loosen the tension pulley mounting nut and adjust the tension of the belt with the adjusting bolt.
- After adjustment, be sure to tighten the bolt and nut.

CAUTION ⚠

- **Excessive tension in the belt may damage not only the belt itself but also the bearings of the related components.**

2. Inspection of Cracks or Damage of the Belt

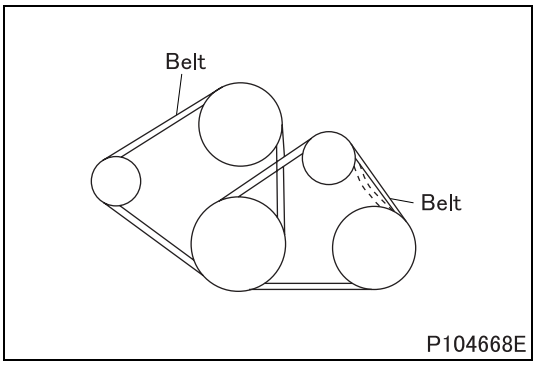

- Visually check the belts for possible cracks and damage.
- If any faults are found, replace the belts.

Belt condition	Remaining service life (reference)
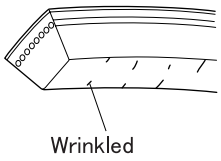 P69698E	• The driving distance over the which the belt can still be used is at least as long as that over which the belt has been used since the vehicle was new or since the belt was replaced (whichever is more recent).
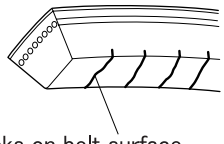 P69699E	• The driving distance over the which the belt can still be used is about half of that over which the belt has been used since the vehicle was new or since the belt was replaced (whichever is more recent).
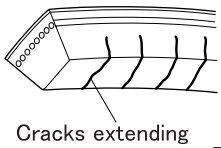 P69700E	• The driving distance over the which the belt can still be used is about a quarter of that over which the belt has been used since the vehicle was new or since the belt was replaced (whichever is more recent).
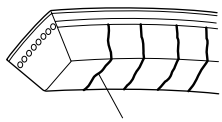 P69701E 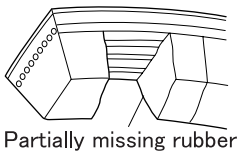 P69702E	• The belt has reached the end of its service life and must be replaced.

3. Coolant Replacement and Cleaning of Cooling System

Tightening torque (Unit: N·m {ft.lbs, kgf·m})

Mark	Parts to be tightened	Tightening torque	Remarks
–	Radiator drain plug	2.0 {1.4, 0.2}	–
–	Crankcase drain plug	7 {5.2, 0.7}	–

- Using the radiator for extended periods of time without cleaning can increase chance of rust and scale formation, which may cause engine overheating. The cooling system must be cleaned periodically.

3.1 Draining of coolant

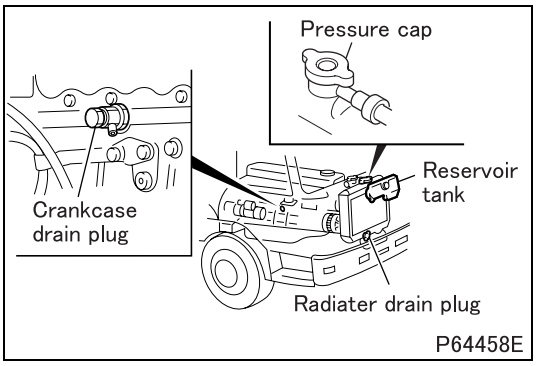

- Before draining the coolant, loosen the pressure cap to reduce the pressure in the cooling system. Remember to drain the coolant out of the reservoir tank as well.

WARNING ⚠

- **Drain the coolant only after it has cooled sufficiently to avoid getting scalded.**
- **Opening the pressure cap while the coolant temperature is still high can cause hot coolant to spray out. Cover the pressure cap with a cloth, and loosen it slowly to let the pressure out before opening it fully.**

3.2 Cleaning procedure

CAUTION ⚠

- **Water used for flushing the cooling system must be soft water that has a property meeting the requirements indicated below. Using hard water will cause scale and rust to form in the system.**
  Total hardness ..... 300 ppm or less
  Sulfate SO_4^- ..... 100 ppm or less
  Chloride Cl^- ..... 100 ppm or less
  Total dissolved solids ..... 500 ppm or less
  pH ..... 6 to 8

- Keep the coolant temperature at approximately 90°C {194°F} so that the thermostat valve remains open and the coolant continues to circulate in the radiator.
- For the sake of convenience you can raise the coolant temperature quickly by covering the front of the radiator with corrugated cardboard or something similar.
- In cases where a great amount of rust has accumulated it is common for the radiator to leak as a result of cleaning. Conduct a thorough check for leakage after cleaning.

- Select an appropriate cleaning method according to the condition of the cooling system as shown below.

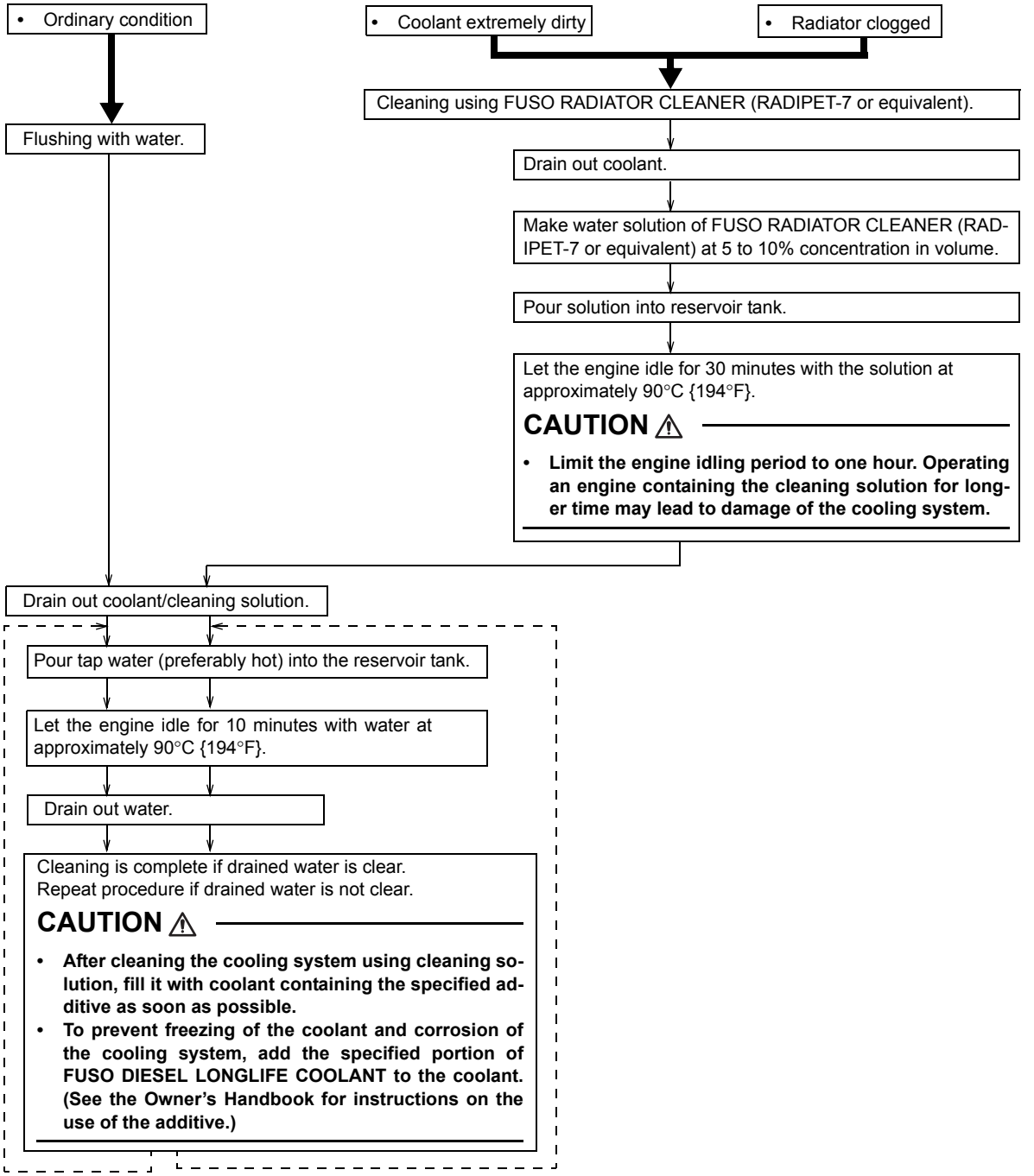

DANGER

- **If you accidentally splash FUSO DIESEL LONGLIFE COOLANT, FUSO ANTIFREEZE, or RADIATOR ANTIRUST (RADIPET 9) in your eyes, wash it out immediately with water and seek medical attention.**

WARNING

- **FUSO DIESEL LONGLIFE COOLANT is flammable. Keep them away from heat and flames.**

4. Air Bleeding of Cooling System

- With the pressure cap removed and the coolant temperature at 90°C {194°F}, let the engine idle in order to bleed air completely out of the cooling system.
- After air bleeding is completed, refill the reservoir tank with coolant as needed.

5. Gas Leakage Test

- Presence of air or exhaust gas in coolant accelerates corrosion of the cooling system components. To prevent this, carry out air/gas leakage tests in accordance with the following procedure.
- Remove the pressure cap.

WARNING ⚠

- **If the engine is hot, boiling coolant may spurt out from the filler port when the pressure cap is loosened. To avoid burning yourself, make sure to remove the pressure cap only when the coolant is cold.**

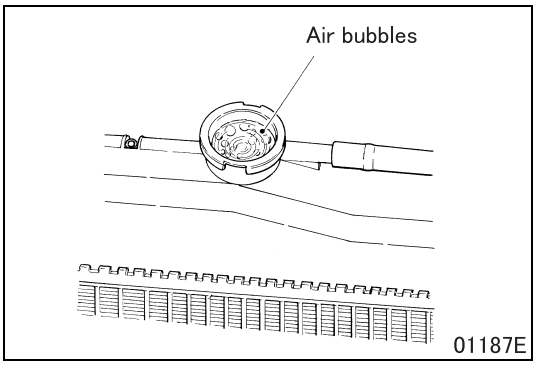

- Run the engine until the coolant temperature rises to approximately 90°C {194°F}.
- If air bubbles appear continuously through the filler port, there is air or exhaust gas penetrating into the cooling system.
- Presence of air in coolant can be an indication of loose cylinder head bolts, loose water pump mounting bolts, loose hose connections, and/or a damaged hose.
- Presence of exhaust gas in coolant can be an indication of a damaged cylinder head gasket and/or cracks in the cylinder head.

Periphery of Radiator

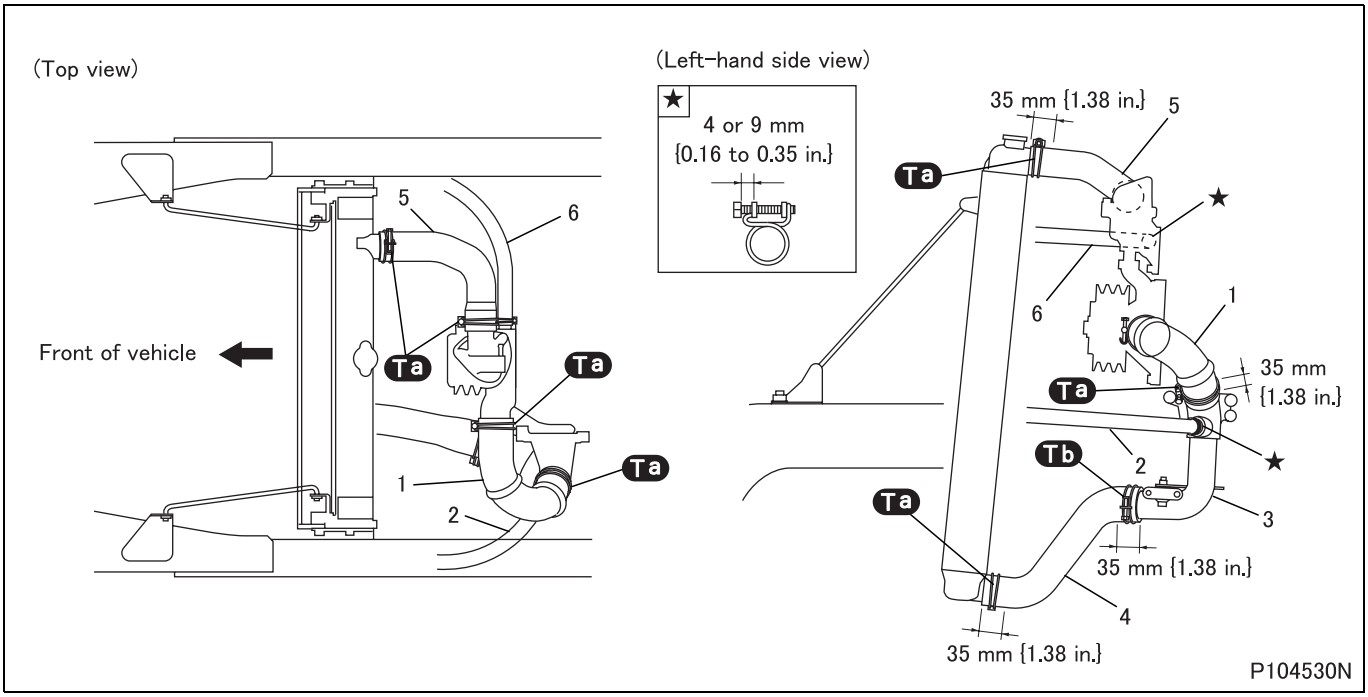

● **Removal sequence**

1 Inlet hose
2 Heater hose
3 Inlet pipe
4 Outlet hose
5 Supply hose
6 Heater hose

● **Installation sequence**

Follow the removal sequence in reverse.

CAUTION ⚠

- **Install each hose clamp to the angle indicated in the illustration so that sufficient clearance is assured between the hose clamp and its surrounding parts.**

Tightening torque (Unit: N·m {ft.lbs, kgf·m})

Mark	Parts to be tightened	Tightening torque	Remarks
Ta	Hose clamp	3.9 ± 0.6 {2.9 ± 0.4, 0.4 ± 0.06}	–
Tb	Hose clamp	4.9 ± 0.5 {3.6 ± 0.4, 0.5 ± 0.05}	–

Periphery of Engine

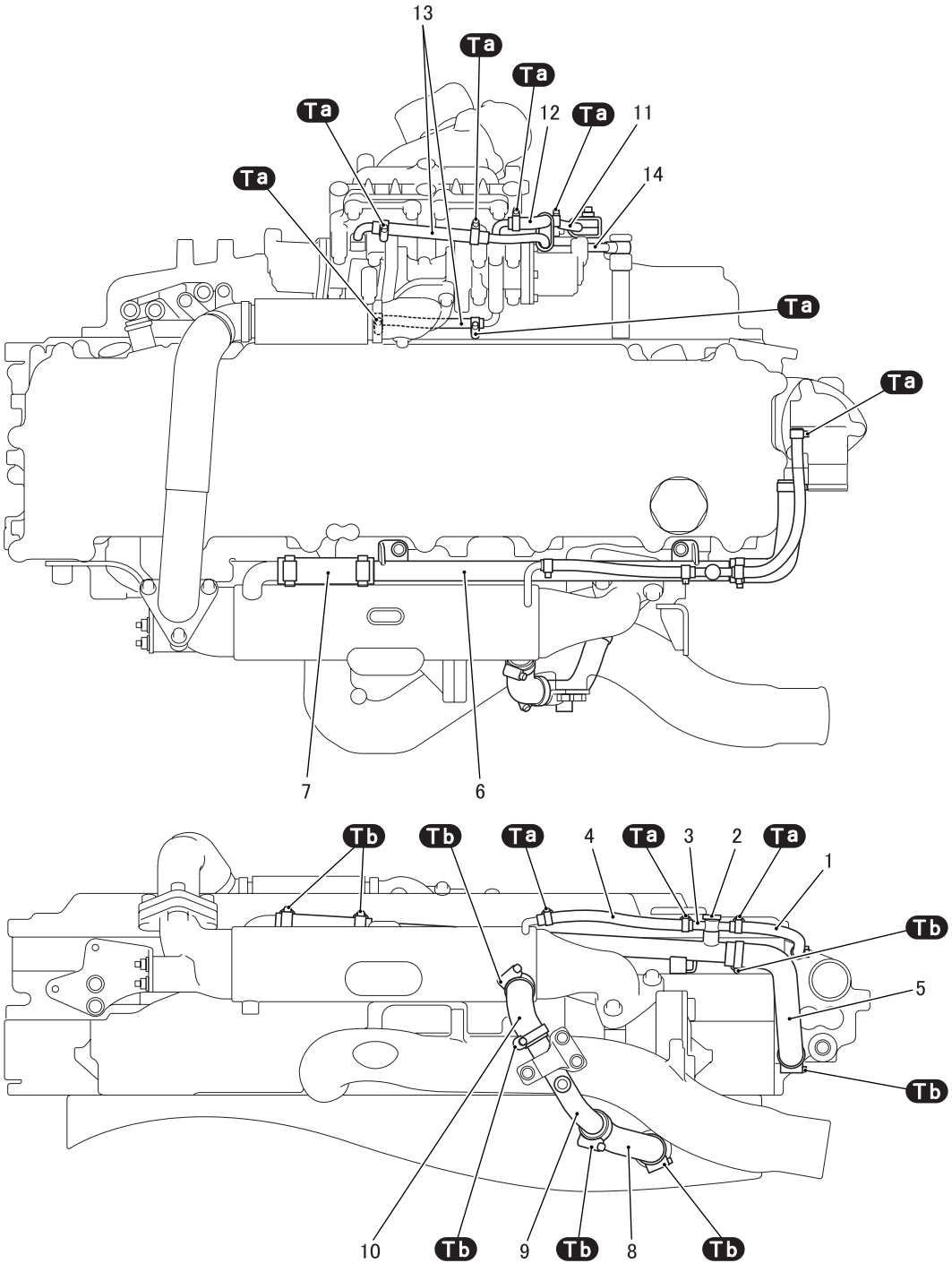

P103997

DISCONNECTION AND CONNECTION OF HOSES AND PIPES

● **Removal sequence**

1 Water hose
2 Eyebolt
3 Joint pipe
4 Water hose
5 Water hose
6 Exhaust gas recirculation cooler water pipe
7 Water hose
8 Water hose
9 Exhaust gas recirculation cooler water pipe
10 Water hose
11 Exhaust gas recirculation valve water inlet pipe
12 Water hose
13 Water hose
14 Exhaust gas recirculation valve water outlet pipe

● **Installation sequence**

Follow the removal sequence in reverse.

CAUTION ⚠

- **Install each hose clamp to the angle indicated in the illustration so that sufficient clearance is assured between the hose clamp and its surrounding parts.**

Tightening torque (Unit: N·m {ft.lbs, kgf·m})

Mark	Parts to be tightened	Tightening torque	Remarks
Ta	Clamp	4 {3.0, 0.4}	–
Tb	Clamp	4 to 5 {3.0 to 3.7, 0.4 to 0.5}	–

M E M O

RADIATOR AND FAN SHROUD

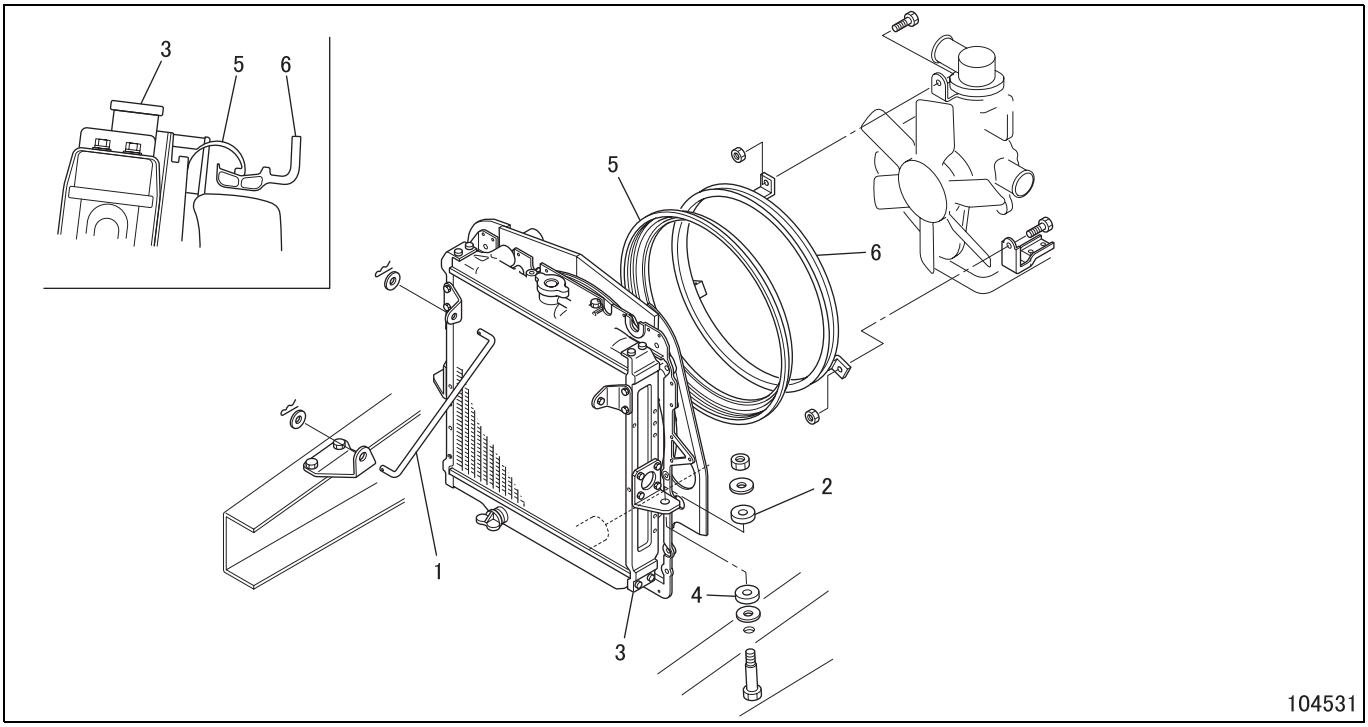

● **Removal sequence**

1 Support rod
2 Rubber seat
3 Radiator (See later pages.)
4 Rubber seat
5 Shroud seal
6 Fan shroud

● **Installation sequence**

Follow the removal sequence in reverse.

NOTE

- **See the previous section "DISCONNECTION AND CONNECTION OF HOSES AND PIPES" for the correct insertion depth of radiator hoses into the radiator as well as the correct tightening torque of clamps.**

Special tools (Unit: mm {in.})

Mark	Tool name and shape	Part No.	Application
☆a	Tip clearance spacer A: 50 {1.97} B: 5 {0.20} 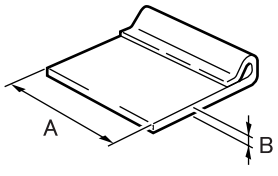 P00189	MC019470	Adjusting clearance between fan shroud and cooling fan blades

◆Installation procedure◆

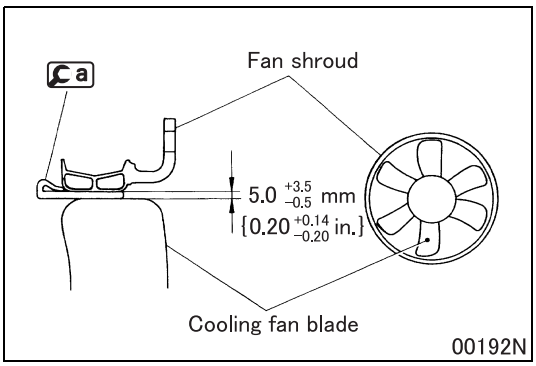

■ **Installation: Fan shroud**

- Using a, adjust the clearance between the fan shroud and cooling fan blades to the dimension shown in the illustration.

RADIATOR AND FAN SHROUD

Radiator Assembly

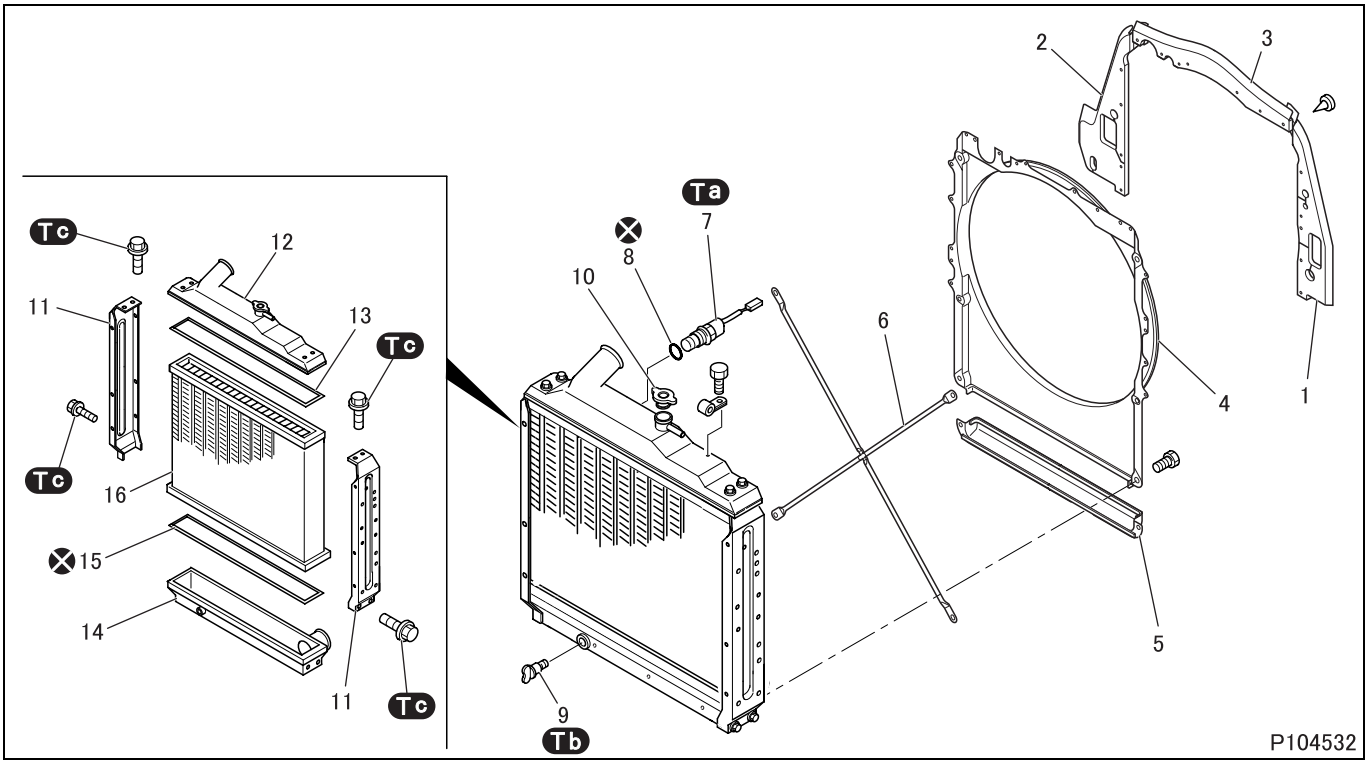

● **Disassembly sequence**

1 Baffle plate LH
2 Baffle plate RH
3 Baffle plate center
4 Radiator shroud
5 Radiator shroud
6 Cross stay
7 Water level sensor
8 O-ring
9 Drain cock
10 Pressure cap
11 Side member
12 Upper tank
13 Packing
14 Lower tank
15 Packing
16 Core

⊗: Non-reusable parts

CAUTION ⚠

- **Do not disassemble radiator assembly unless there is an abnormality.**
- **Gently handle upper tank and lower tank, since they are made of a resin that can break on impact.**
- **If there are two paint marks on the joint between the core and upper tank or on the joint between the core and lower tank (which indicates that the tank retaining tabs have been crimped twice before), replace the core with a new part.**

● **Assembly sequence**

Follow the disassembly sequence in reverse.

Service standards

Location	Maintenance item	Standard value	Limit	Remedy
10	Pressure cap opening pressure	69 ± 15 kPa {10 ± 2.2 psi, 0.7 ± 0.15 kgf/cm^2}	–	Replace
16	Air leakage from radiator (air pressure: 150 kPa {21 psi, 1.5 kgf/cm^2})	0 cm^3 {0 cu.in., 0 mL}	–	Repair or replace

Tightening torque (Unit: N·m {ft.lbs, kgf·m})

Mark	Parts to be tightened	Tightening torque	Remarks
Ta	Water level sensor	2.9 to 3.9 {2.1 to 2.9, 0.3 to 0.4}	–
Tb	Drain cock	2 {1.5, 0.2}	–
Tc	Bolt (side member mounting)	12.7 ± 2 {9.4 ± 1.5, 1.3 ± 0.2}	–

Special tools

Mark	Tool name and shape	Part No.	Application
Ca	Lock-and-break tool	J94-Z013 -10000	Removal of upper and lower tanks

The indicated part number is T.RAD's part number.

◆Inspection before removal◆

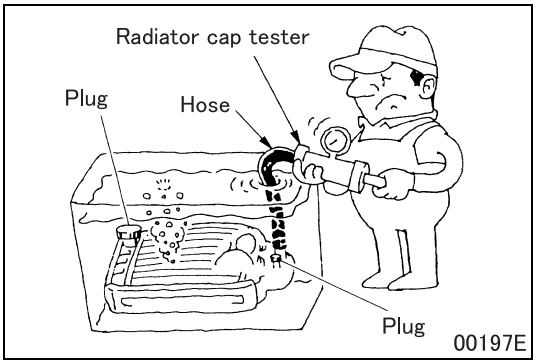

■ Inspection: Air leaking of radiator

- Install hose and radiator cap tester and plug to upper tank.
- Insert plug in lower tank, and immerse the entire body of the radiator in water.
- Apply a specified air pressure using radiator cap tester, and check for any air leakage.
- If any leakage is found, repair or replace radiator.

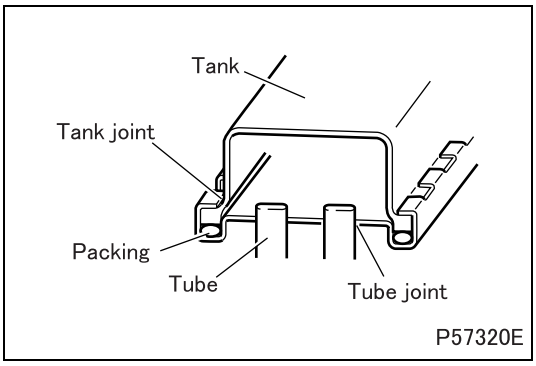

- Replace the following parts according to the leakage location.

Area of leakage		Cause
Upper tank Lower tank	Tank	Cracked tank
	Tank joint	Defective crimping Defective packing Cracked tank
Tube, tube joint		Cracked tube

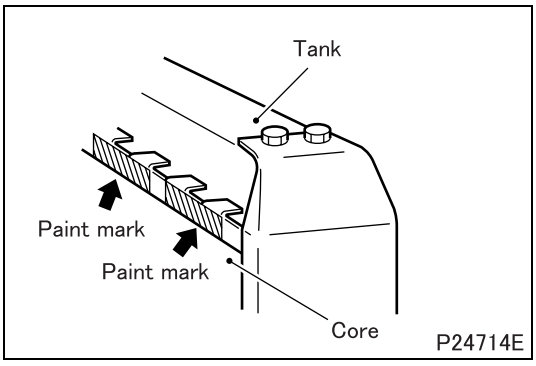

CAUTION ⚠

- **If there are two paint marks on the joint between the core and upper tank or on the joint between the core and lower tank (which indicates that the tank retaining tabs have been crimped twice before), replace the core with a new part.**
- **The number of paint marks on the upper tank joint or the lower tank joint corresponds to the number of repairs performed on that joint.**

◆Inspection procedure◆

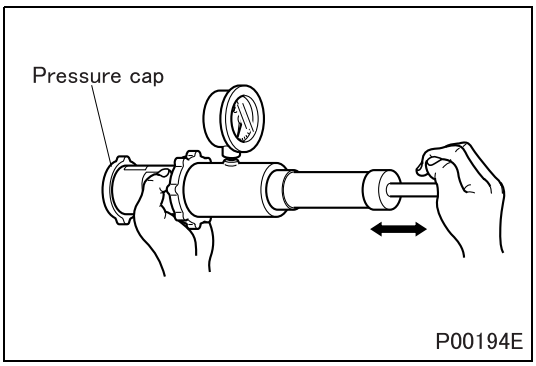

■ **Inspection: Pressure cap**

(1) Pressure valve opening pressure

- If the measurement does not conform to the standard value, replace the pressure cap.

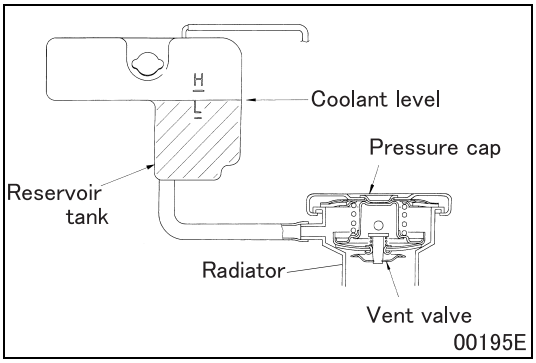

(2) Inspection of vent valve

- Note the coolant level in the reservoir tank.
- Start the engine and run it at high speed until the coolant level in the reservoir tank has risen to a certain degree. Stop the engine.
- Allow the system to cool down. When the coolant temperature has dropped to the atmospheric temperature, check if the coolant level in the reservoir tank has subsided to the original level noted earlier.
- If not, the vent valve is deemed faulty. Replace the pressure cap.

CAUTION ⚠

- **If the pressure cap is opened before the coolant temperature drops to the atmospheric temperature, the negative pressure in the radiator is canceled out. As a result, it is no longer possible for coolant to flow into the reservoir tank. Ensure that this does not happen.**

◆Removal procedure◆

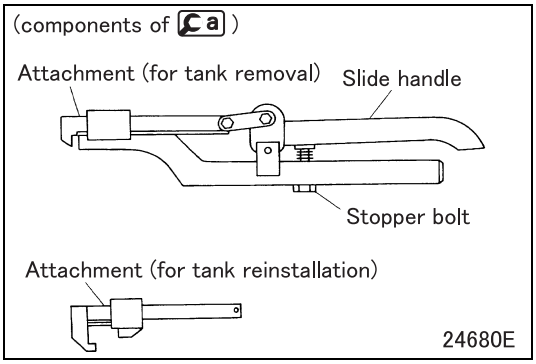

■ **Removal: Upper tank and lower tank**

- Use Ca for removal and reinstallation of the tanks.

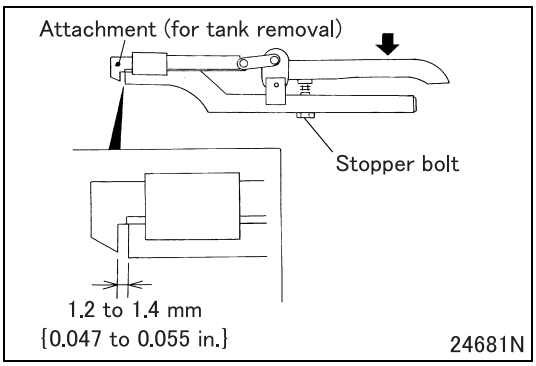

- Adjust the stopper bolt until the gap dimension shown in the illustration is obtained on the attachment of Ca.

CAUTION ⚠

- **Before using Ca, be sure to set the gap to the specified dimension by adjusting the stopper bolt. Otherwise, Ca will become damaged.**

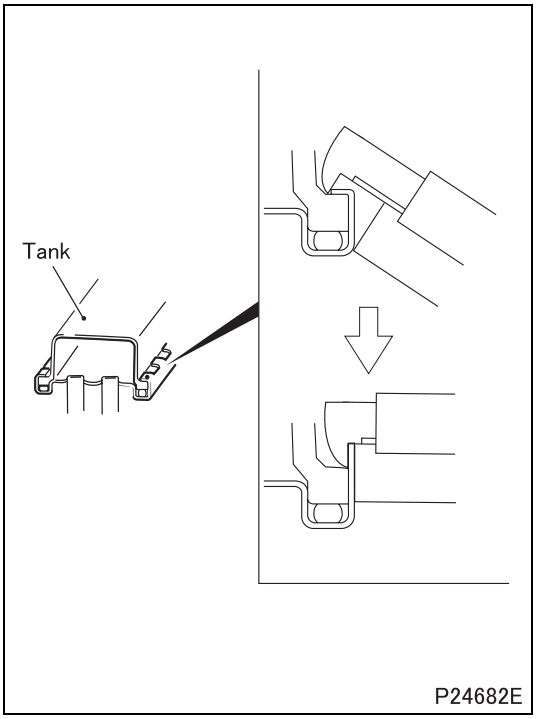

- Use [Ca] to bend open tabs of retain tank in place.
- After tabs are bent open, squeeze the handle of [Ca] to straighten tabs as illustrated.
- After straightening all tabs in the perimeter, hold the pipes connected to the inlet/outlet, and remove tank.

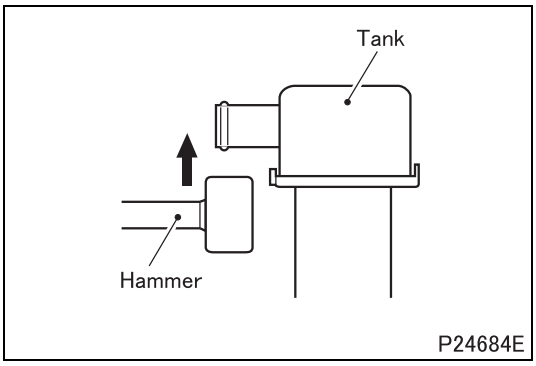

- If it is difficult to remove tank lightly hit with rubber hammer (or plastic hammer) to remove.

CAUTION ⚠

- **Gently handle tanks, since they are made of a resin that can break on impact.**

◆Inspection procedure◆

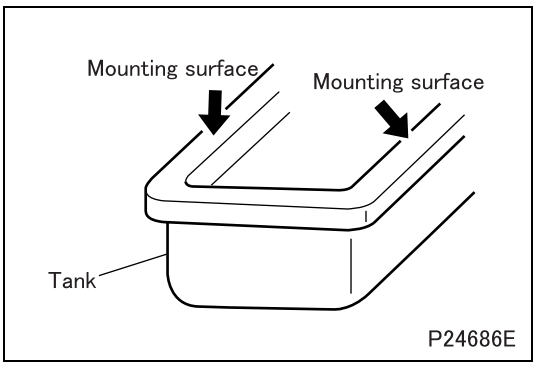

■ Inspection: Tank surface where core is to be mounted

- Check the tank surface where the core is to be mounted for cleanliness, damage, etc. Clean the surface.
- If an abnormality is found on the surface, replace the tank.

CAUTION ⚠

- **To prevent adhesion of foreign substances on mounting surface, conduct work with bare hands.**

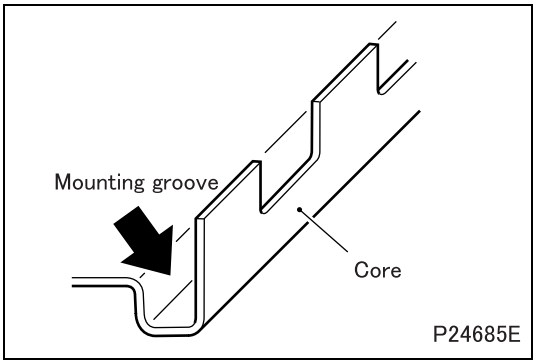

■ **Inspection: Core groove where tank is to be mounted**

- Check the groove on the core where the tank is to be mounted for adhesion of foreign substances or cracks.
- If foreign substances are found, rub the area with #1000 sandpaper or a like gently so as to avoid scratching the surface, or use compressed air to remove them.
- If there are cracks in the groove, repair or replace.

CAUTION ⚠

- **If the packing and tank are installed onto the core without removing foreign substances from the groove, coolant leakage will result. Be sure to inspect and clean the tank mounting groove along the entire periphery (even a hair can cause leakage).**

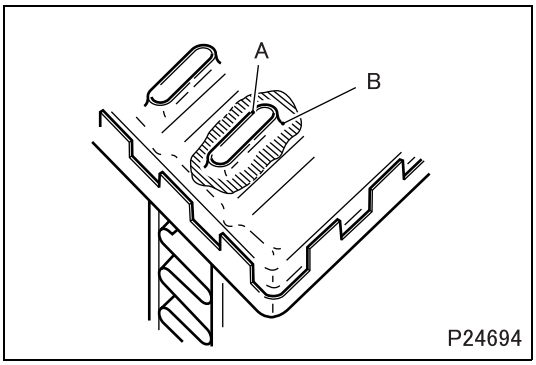

Repairing core

CAUTION ⚠

- **The core is repaired by means of tungsten inert-gas arc welding (TIG welding), which should only be performed by a skilled welder.**
- **It is extremely dangerous to weld on a wet core. Before welding, ensure that the core is completely dry.**

- Using a stainless wire brush, brush both ends A of the leaky tube and the areas B around the tube ends until the base aluminum is exposed.
- Before closing the tube at both ends by welding, drill a small breather hole in the tube.

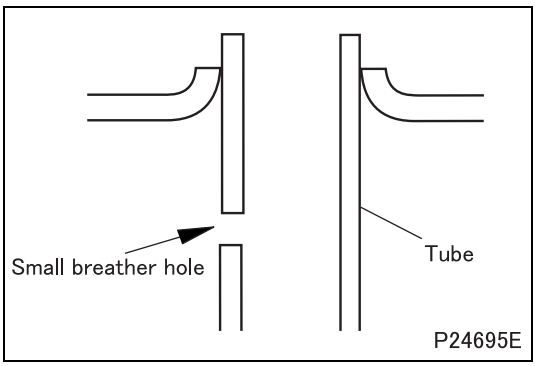

CAUTION ⚠

- **If a breather hole is not provided, the tube may develop small pinholes due to escaping air.**

- Ground the core at the support.

CAUTION ⚠

- **If welding is performed without the core properly grounded, this can lead to short-circuit where the base metal may melt.**

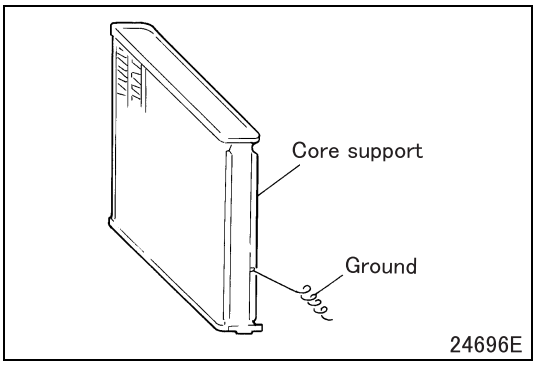

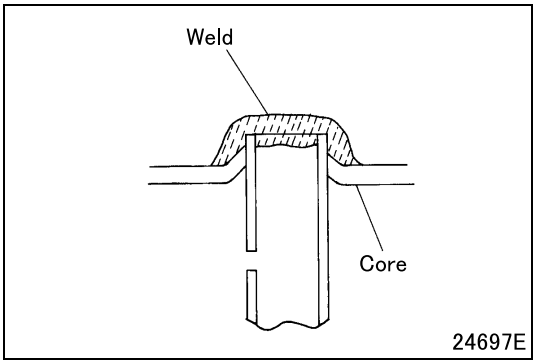

- Close both end of the tube by tungsten inert-gas arc welding (TIG welding).
  Welding conditions
  - Welding rod: A4043 (approx. ϕ2 mm {0.079 in.})
  - Welding current: AC80A
- After welding, check for the following problems. If any of them exist, repair again or replace the core.
  - Undercut
  - Bead crack
  - Base metal crack

CAUTION ⚠

- **Improper weld can lead to recurrence of coolant leakage.**

◆Installation procedure◆

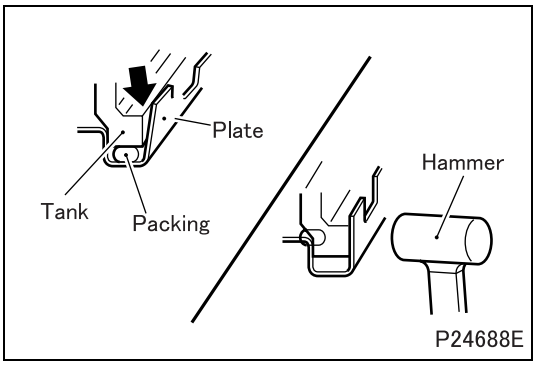

■ Installation: Upper tank, lower tank

- With the tank installed, eliminate any clearance between the tank and core plate by tapping with a rubber (or plastic) hammer.

CAUTION ⚠

- **To prevent adhesion of foreign matter, use bare hands to install the packing and tank.**

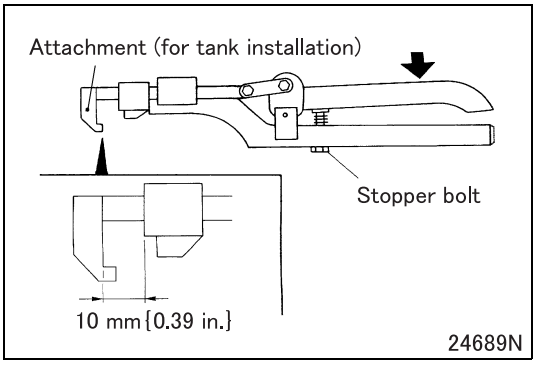

- Adjust the stopper bolt until the gap dimension shown in the illustration is obtained on the attachment of [Ca].

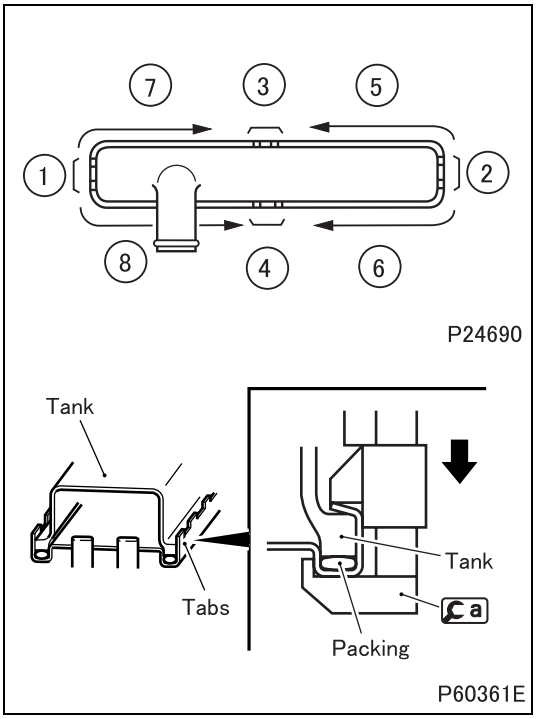

- Following the sequence shown in the diagram, bend tabs for caulking tank.
  1 to 4: Bend two tabs at the center.
  5 to 8: Bend other tabs following the direction of the arrow.

NOTE

- **Since a cannot be used to caulk sides 1 and 2, use pliers with the tips wrapped in vinyl tape.**

- After crimping the tabs onto the tank, check for coolant leakage.

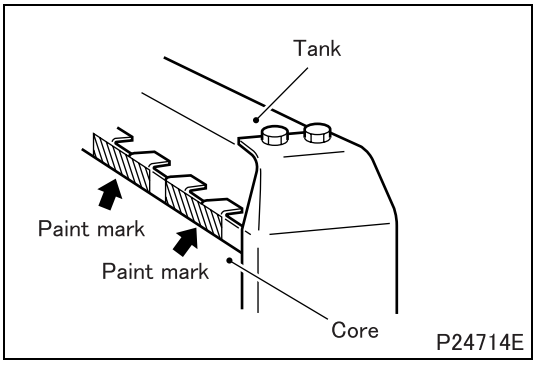

- Paint a mark on the core where it can be easily noticed to indicate that the core has been crimped.

CAUTION ⚠

- **Paint a mark for each repair performed on either the upper or lower tank.**

M E M O

COOLING FAN, BELT AND WATER PUMP

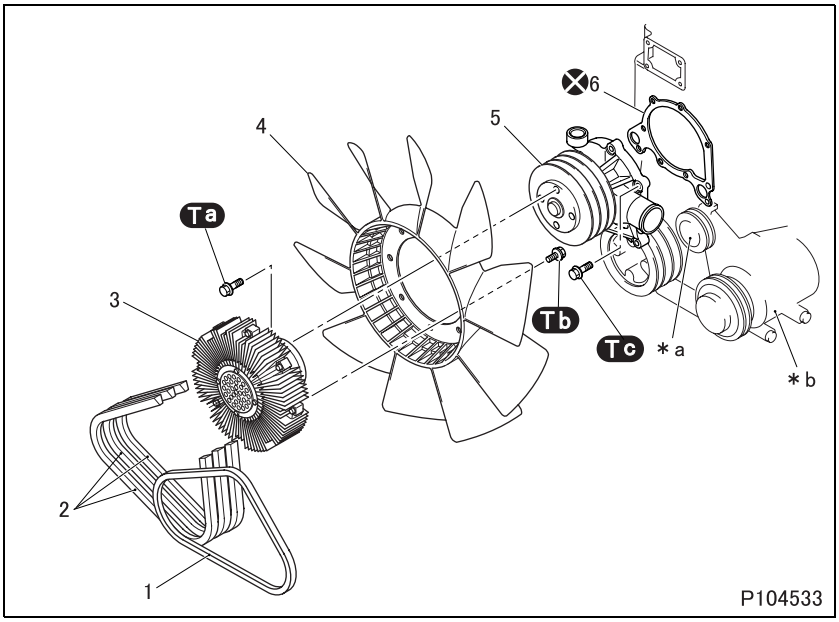

● Disassembly sequence

1 Belt (for air conditioner)
2 Belt (for fan)
3 Automatic cooling fan coupling
4 Cooling fan
5 Water pump
6 Water pump gasket

***a**: Tension pulley (See Gr55.)
***b**: Compressor (for air conditioner) (See Gr55.)
⊗: Non-reusable parts

● Assembly sequence

Follow the disassembly sequence in reverse.

CAUTION ⚠

- **The automatic cooling fan coupling cannot be disassembled. If it is found faulty, replace the whole assembly.**

Tightening torque (Unit: N·m {ft.lbs, kgf·m})

Mark	Parts to be tightened	Tightening torque	Remarks
Ta	Bolt (for automatic cooling fan coupling)	34 {25, 3.5}	–
Tb	Bolt (for cooling fan installation)	53.9 {40, 5.4}	–
Tc	Bolt (water pump mounting)	24 {18, 2.4}	–

◆Inspection and cleaning procedure◆

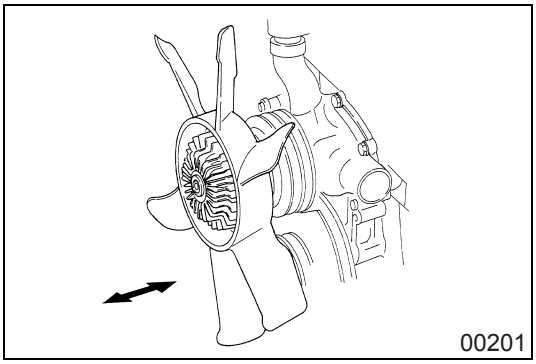

■ Inspection: Automatic cooling fan coupling

- Inspect the automatic cooling fan coupling in accordance with the following procedure. If any defect is apparent, replace the unit.
  - Check for leakage of oil from the coupling body.
  - Rotate the automatic cooling fan coupling by hand and check for irregular movement or abnormal noise caused by a defect in the bearing.
  - Check for excessive axial play in the automatic cooling fan coupling when the engine is cool.

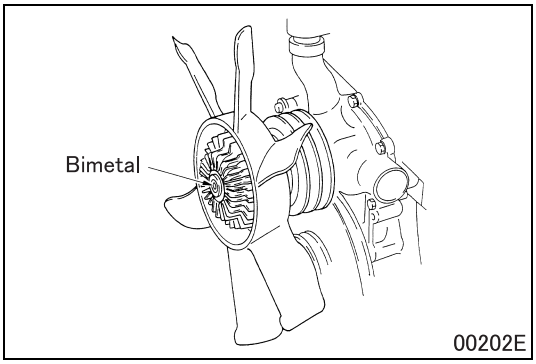

■ **Cleaning: Automatic cooling fan coupling**

- If any foreign particles have adhered to the bimetal, remove them carefully without applying excessive force.

THERMOSTAT

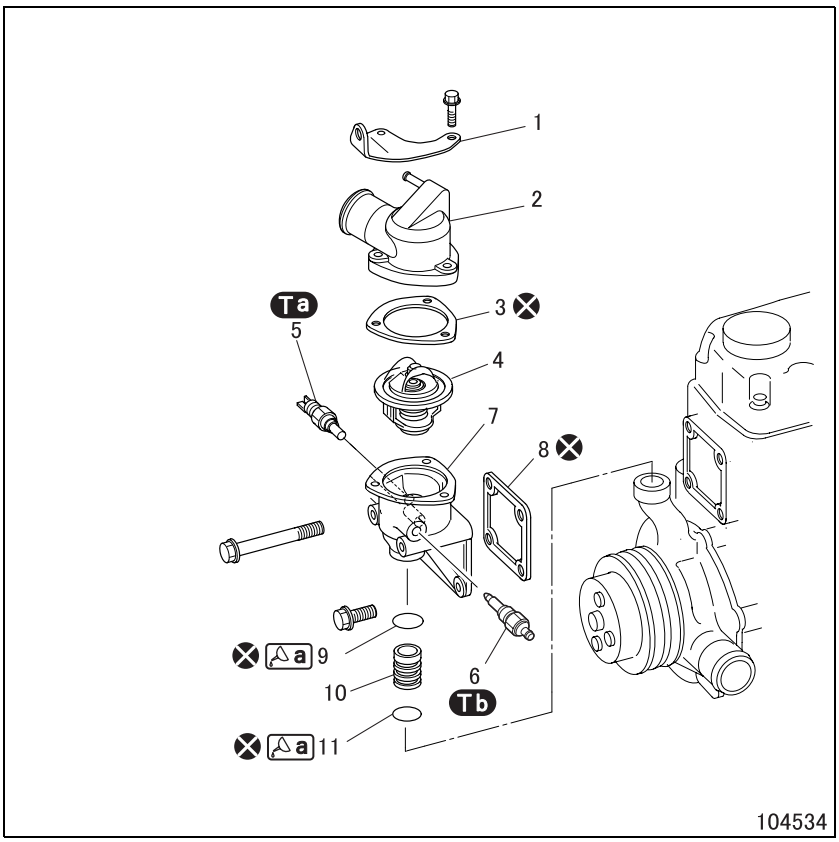

● **Disassembly sequence**

1 Fan shroud stay
2 Thermostat cover
3 Gasket
4 Thermostat
5 Water temperature sensor
6 Overheat alarm switch
7 Thermostat case
8 Gasket
9 O-ring
10 Joint
11 O-ring

⊗: Non-reusable parts

CAUTION ⚠

- **Do not remove the thermostat case unless it has a water leak or any other defect.**

● **Assembly sequence**

Follow the disassembly sequence in reverse.

NOTE

- **Refer to the previous section "DISCONNECTION AND CONNECTION OF HOSES AND PIPES" for the correct insertion depth of thermostat cover and case hoses into the pump as well as the correct tightening torque of clamps.**

Service standards (Unit: mm {in.})

Location	Maintenance item		Standard value	Limit	Remedy
4	Thermostat	Valve opening temperature	82 ± 2°C {180 ± 3.6°F}	–	Replace
		Valve lift/temperature	10 {0.39} or more/ 95°C {205°F}	–	

Tightening torque (Unit: N·m {ft.lbs, kgf·m})

Mark	Parts to be tightened	Tightening torque	Remarks
Ta	Water temperature sensor (for thermometer)	35 ± 7 {26 ± 5.2, 3.6 ± 0.7}	–
Tb	Overheat alarm switch	39 to 59 {29 to 44, 4 to 6}	–

Lubricant and/or sealant

Mark	Points of application	Specified lubricant and/or sealant	Quantity
a	O-ring	Soapy water	As required

◆Inspection procedure◆

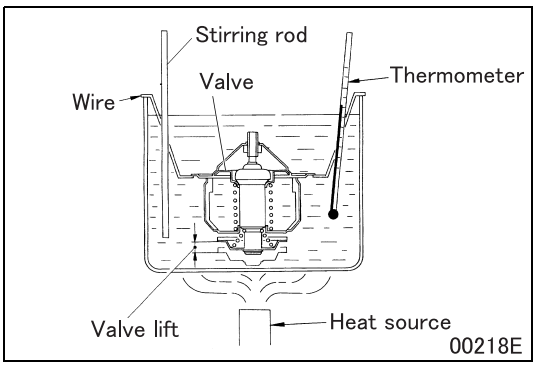

■ **Inspection: Thermostat**

- Stir the water using a stirring rod to maintain an even water temperature in the container, then conduct the tests indicated below.
- If the measured values deviate from the standard value ranges, replace the thermostat.

(1) Valve opening temperature

- Hold the thermostat with wire to keep it away from the heat source.
- Heat the water gradually to the valve opening temperature.
- Maintain this temperature for five minutes and make sure that the valve is completely open.
- Make sure that the valve closes completely when the water temperature drops below 65°C {149°F}.

(2) Valve lift

- Heat the water to a temperature slightly higher than the valve opening temperature. Maintain this temperature for five minutes and measure the valve lift.

◆Installation procedure◆

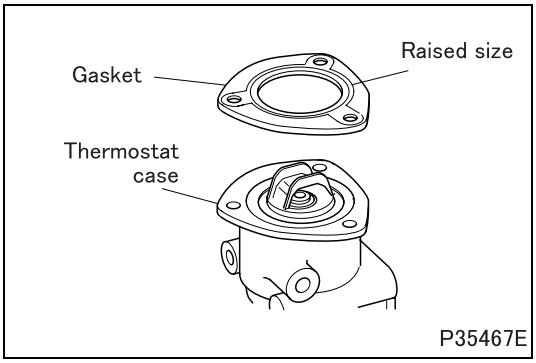

■ **Installation: Gasket**

- Fit the gasket onto the thermostat case in the illustrated direction.

Group 15

Intake and Exhaust

Table of Contents

Back

Home

MITSUBISHI FUSO TRUCK OF AMERICA, Inc.

Pub.No.TWME0806-15

INDEX

SPECIFICATIONS 15-2

STRUCTURE AND OPERATION

1. **Air Cleaner 15-3**
2. **Turbocharger 15-4**
3. **Reducing Valve 15-6**
4. **Diesel Particulate Filter Regeneration Control System 15-7**

TROUBLESHOOTING 15-16

ON-VEHICLE INSPECTION AND ADJUSTMENT

1. **Measurement of Turbocharger Boost Pressure 15-18**
2. **Cleaning and Inspection of Air Cleaner Element 15-20**
3. **Diesel Particulate Filter Unit Inspection for Clogging and Cleaning the Diesel Particulate Filter Unit 15-21**
4. **Resetting the DPF-related Information (Resetting Electronic Control Unit) 15-25**

AIR CLEANER AND AIR DUCT 15-28

TURBOCHARGER 15-32

INTERCOOLER 15-38

INTAKE MANIFOLD 15-40

EXHAUST MANIFOLD 15-42

EXHAUST PIPE 15-44

DIESEL PARTICULATE FILTER 15-50

SPECIFICATIONS

Item		Specifications
Air cleaner element		Cyclone filter paper type
Turbocharger	Model	TD06
	Manufacturer	MITSUBISHI HEAVY INDUSTRIES
Intercooler type		Tube and corrugated fin (air cooled)
DPF (diesel particulate filter) type		Regeneration control type diesel particulate filter system

1. Air Cleaner

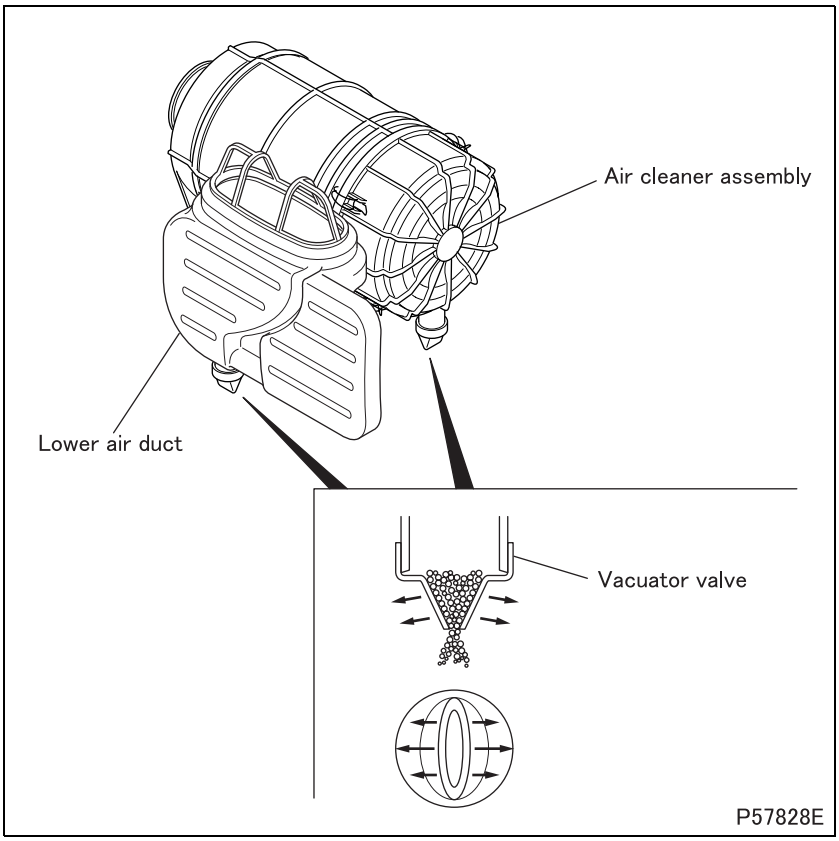

- The air cleaner assembly utilizes single element.
- The lower air duct and air cleaner assembly incorporate a vacuator valve each.
- The vacuator valve automatically works in such a way that when the engine speed drops below a specified level, the valve's rubber boot which is usually subdued by internal vacuum is allowed to spring back and accumulated dust and dirt are discharged as a result.

2. Turbocharger

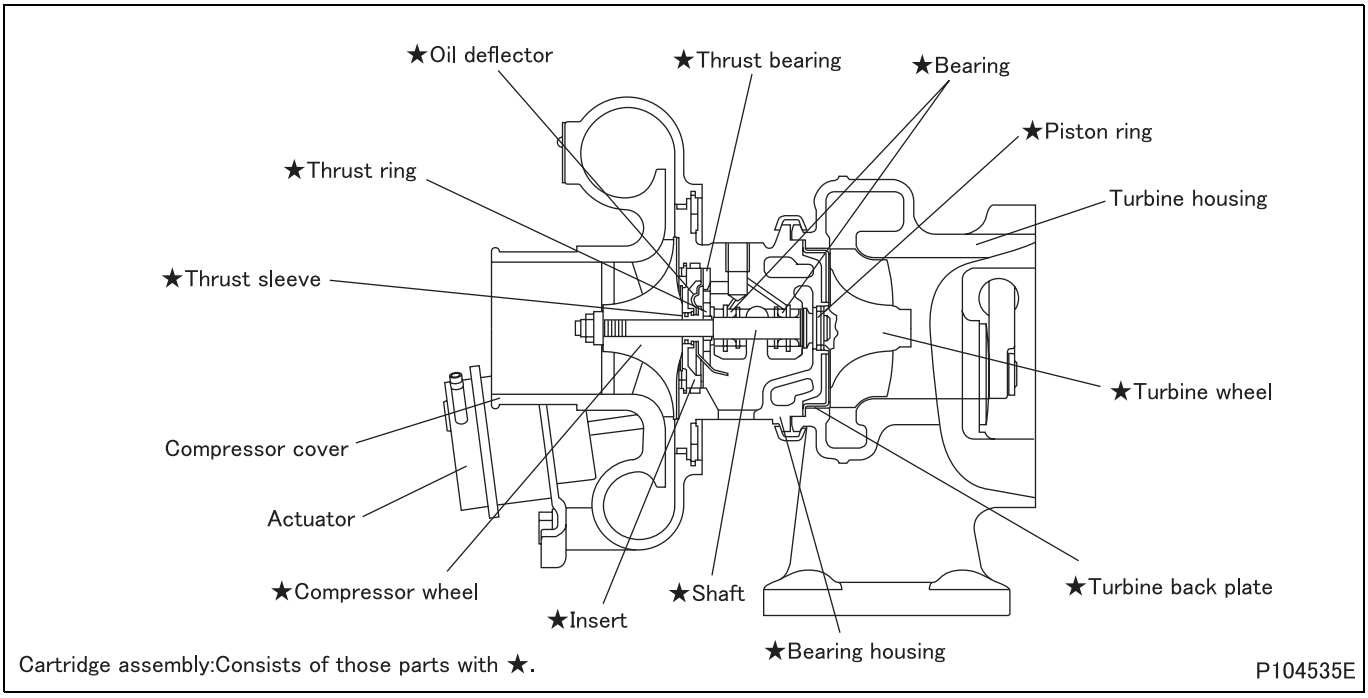

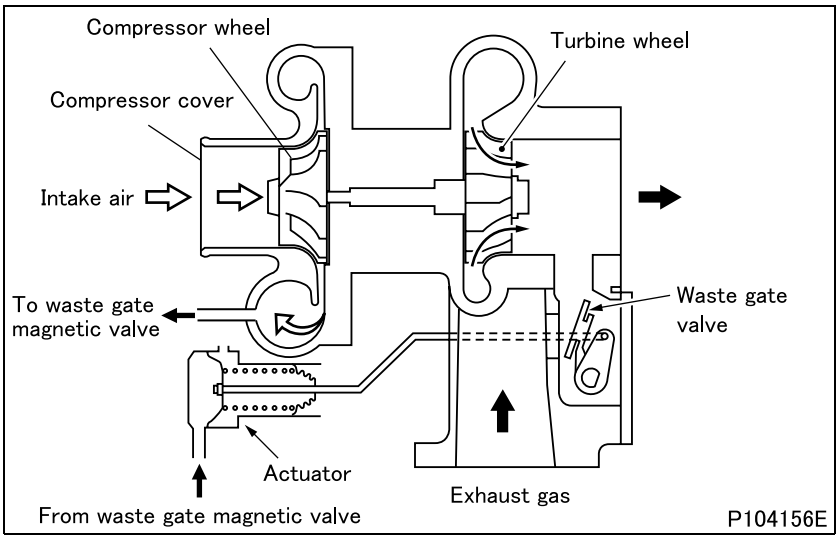

2.1 Waste gate mechanism

- The waste gate mechanism, which is operated by an actuator, is designed to let excess exhaust gas bypass the turbocharger, thereby preventing the turbocharger from overrunning and the intake manifold pressure from rising excessively. This ensures that the boost pressure is properly controlled.
- There are two ways of actuator operation of the waste gate mechanism, i.e., a normal control mode in which the waste gate valve is opened by means of pressure in the compressor cover and a diesel particulate filter regeneration control mode in which the waste gate valve is forced to open by air pressure from the air tank in response to a signal from the engine electronic control unit for diesel particulate filter regeneration.

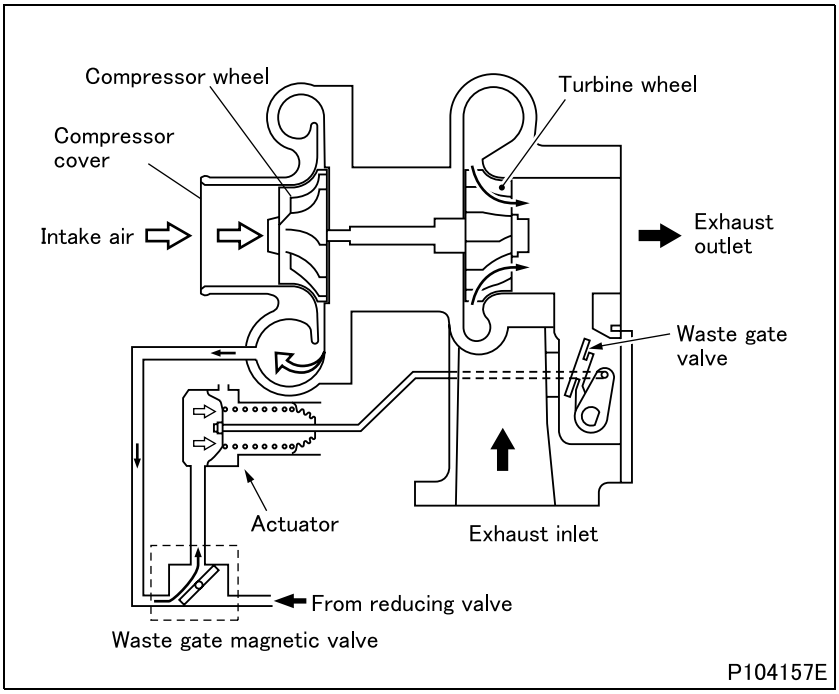

2.2 Normal control mode

- Normally, as the waste gate magnetic valve is inactive, air pressure from the compressor wheel acts on the actuator to open the waste gate valve.
- With the opening of the waste gate valve, exhaust gas fed against the turbine wheel is reduced. This decreases the compressor wheel speed and the boost pressure is lowered as a result.

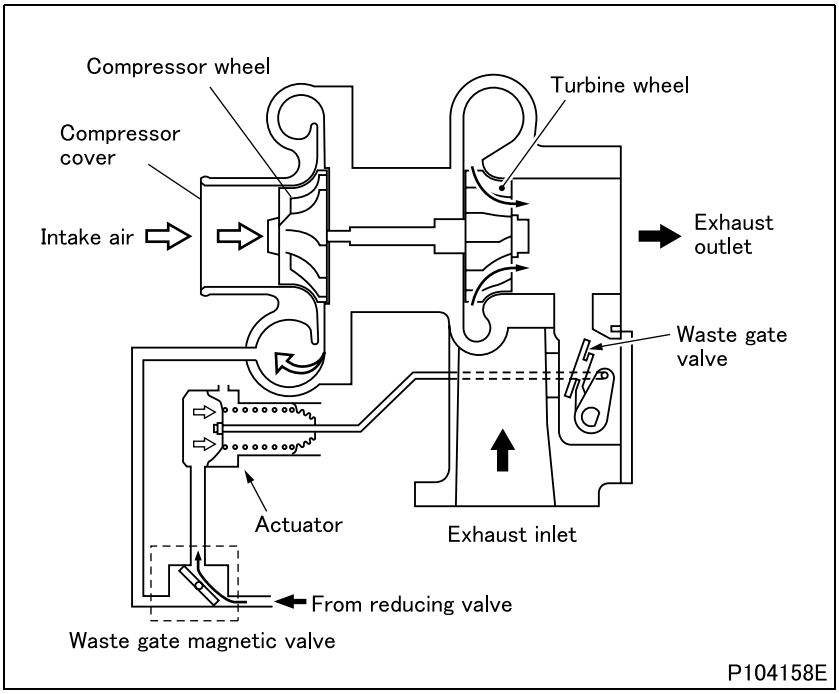

2.3 Diesel particulate filter regeneration control mode

- When this mode is selected, the waste gate magnetic valve is activated, and air pressure from the air tank reduced by the reducing valve acts on the actuator to open the waste gate valve.

3. Reducing Valve

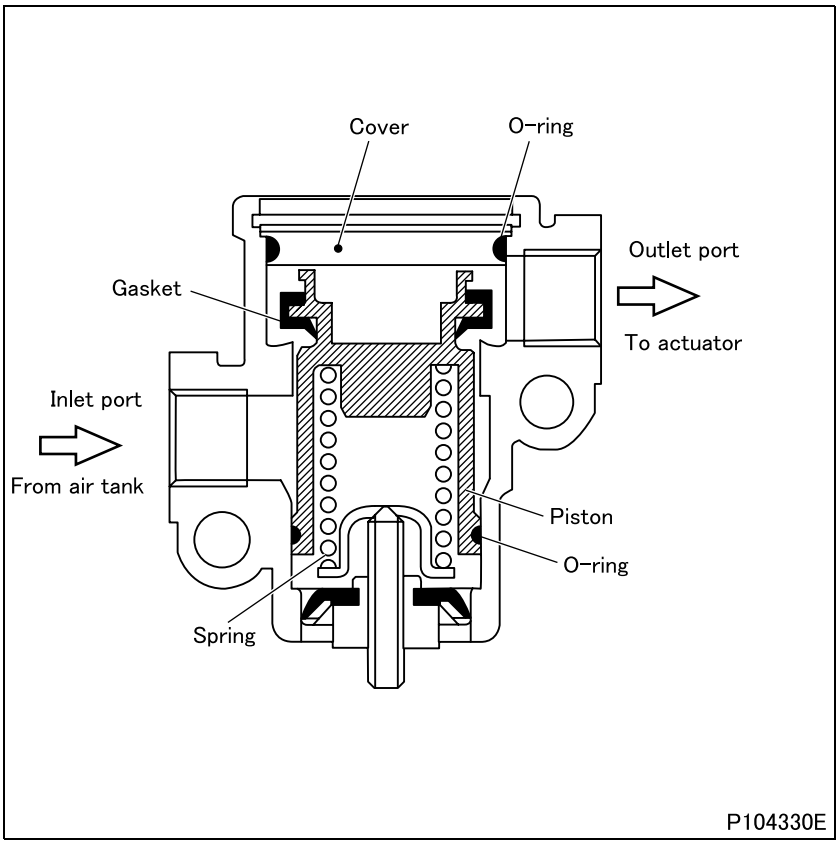

- The reducing valve is designed to reduce air pressure fed from the inlet port to the outlet port to the preset level.

4. Diesel Particulate Filter Regeneration Control System

4.1 General

- The diesel particulate filter regeneration control system burns and removes the particulate matter (PM) in the ceramic filter using high temperature exhaust gas to prevent excessive accumulation of particulate matter in the ceramic filter. Thus the diesel particulate filter is regenerated.
- The regeneration is divided into two types. One is the continuous regeneration utilizing high temperature exhaust gas during high-speed or high-load operations. The other is the automatic or manual regeneration which uses high temperature exhaust gas created by the regeneration control by the engine electronic control unit.
- For automatic or manual regeneration, the engine electronic control unit estimates the accumulated amount of particulate matter from the vehicle operating hours, driving distance and the engine condition during driving, and the regeneration is performed by controlling the fuel injection (amount and timing), turbocharger, exhaust shutter and intake throttle to make high temperature exhaust gas.

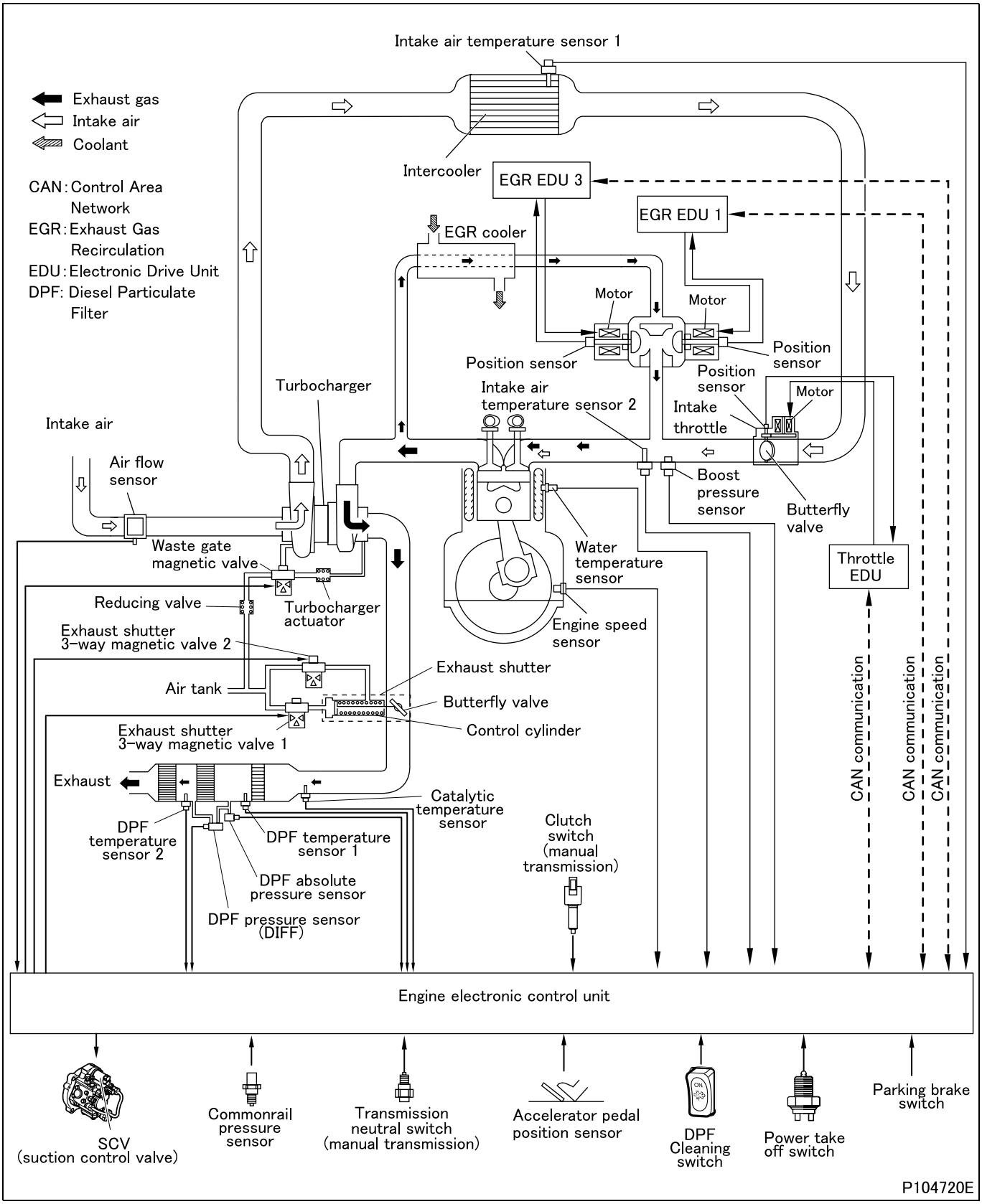
Exhaust gas
Intake air
Coolant
CAN: Control Area Network
EGR: Exhaust Gas Recirculation
EDU: Electronic Drive Unit
DPF: Diesel Particulate Filter
Intake air temperature sensor 1
Intercooler
EGR EDU 3
EGR EDU 1
EGR cooler
Motor
Motor
Position sensor
Position sensor
Position sensor
Motor
Intake throttle
Turbocharger
Intake air temperature sensor 2
Intake air
Air flow sensor
Boost pressure sensor
Butterfly valve
Waste gate magnetic valve
Water temperature sensor
Throttle EDU
Reducing valve
Turbocharger actuator
Engine speed sensor
Exhaust shutter 3-way magnetic valve 2
Exhaust shutter
Air tank
Butterfly valve
Control cylinder
Exhaust shutter 3-way magnetic valve 1
Exhaust
Catalytic temperature sensor
DPF temperature sensor 2
DPF temperature sensor 1
Clutch switch (manual transmission)
DPF absolute pressure sensor
DPF pressure sensor (DIFF)
CAN communication
CAN communication
CAN communication
Engine electronic control unit
SCV (suction control valve)
Commonrail pressure sensor
Transmission neutral switch (manual transmission)
Accelerator pedal position sensor
DPF Cleaning switch
Power take off switch
Parking brake switch
P104720E

4.2 Continuous regeneration and regeneration control

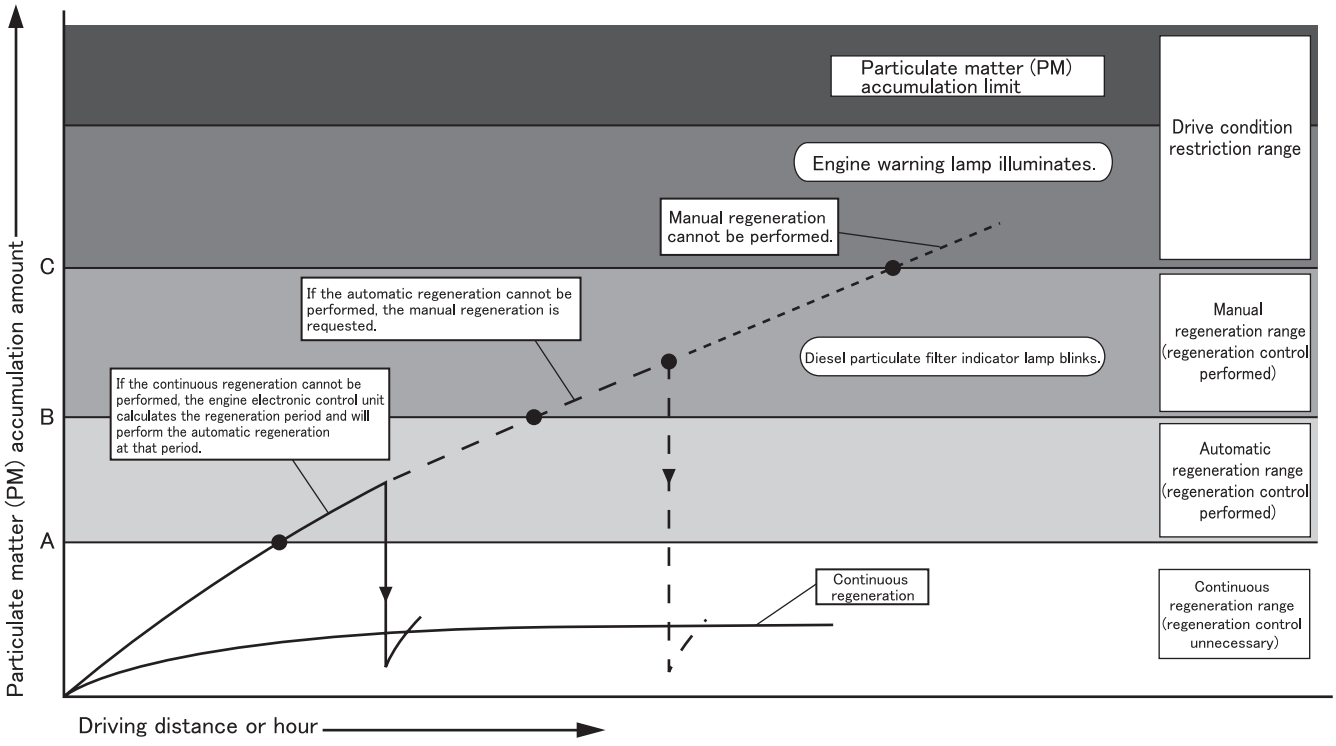

- The above diagram shows the relations between the driving distance or hours and the particulate matter accumulation amount, and the range of each diesel particulate filter regeneration operation.
- The particulate matter accumulation amount increases as the driving distance or hours increase. However, by conducting the regeneration operation that matches the vehicle operating condition and the particulate matter accumulation amount, the particulate matter accumulation amount is reduced to keep the performance of the diesel particulate filter.
- The regeneration is divided into two types - the continuous regeneration utilizing exhaust gas during normal driving operation and the automatic or manual regeneration which uses exhaust gas created by the regeneration control.

(1) Continuous regeneration

- When exhaust gas temperature is high during high-speed or high-load operation, NO_2 created by the action of the front oxidation catalyst continuously burns the particulate matter accumulated in the ceramic filter.

(2) Regeneration control

(2.1) Automatic regeneration

- When the particulate matter accumulation level is between A and B on the diagram, the engine electronic control unit decides the regeneration period and the automatic regeneration will be performed at an appropriate period. During regeneration, the unburnt fuel (HC) supplied by the post injection is oxidized by the front oxidation catalyst, and the oxidation heat from that reaction burns the particulate matter accumulated in the ceramic filter.

(2.2) Manual regeneration

- When the particulate matter accumulation level is between B and C on the diagram, the engine electronic control unit makes the diesel particulate filter indicator lamp blink. If the diesel particulate filter cleaning switch is turned on by the driver when the following conditions are met, the manual regeneration will take place.
  - Engine has warmed up (coolant temperature: 70°C {158°F} or higher)
  - Diesel particulate filter cleaning switch: ON (Press the switch until the diesel particulate filter indicator stays on.)
  - Accelerator pedal released (accelerator pedal position sensor: 0%)
  - Parking brake applied (parking brake switch: ON)
  - Transmission in neutral position (transmission neutral switch: OFF)
  - Clutch pedal released (clutch pedal switch: ON)
  - Power take-off inactive (power take-off switch: OFF)
- During regeneration, the diesel particulate filter indicator lamp blinks in two intervals (slow and fast) in accordance with the particulate matter accumulation amount.
- The exhaust gas temperature increase procedure and the particulate matter burning procedure are the same as that for the automatic regeneration.

(2.3) Restriction on drive conditions

- When the particulate matter accumulation level exceeds C on the diagram, the engine warning lamp illuminates and some restrictions are applied to the driving conditions.

4.3 Diesel particulate filter unit

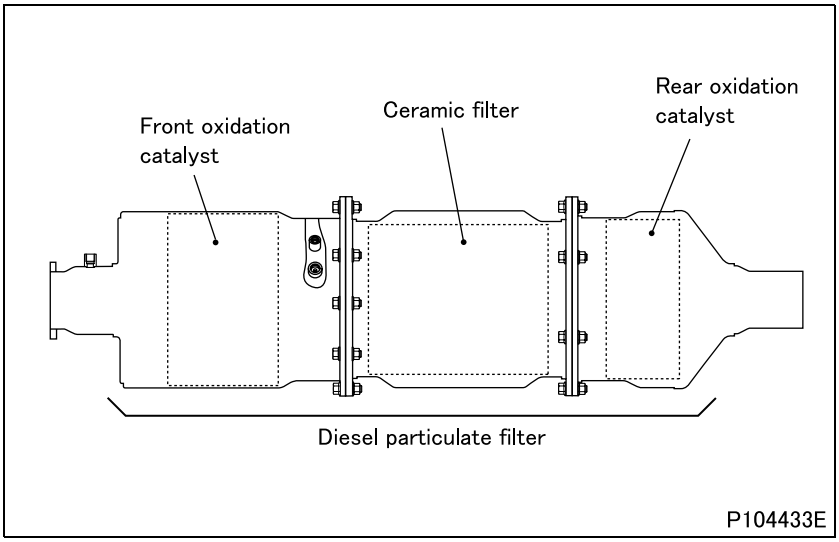

- Diesel particulate filter unit consists of the front oxidation catalyst, ceramic filter and rear oxidation catalyst.

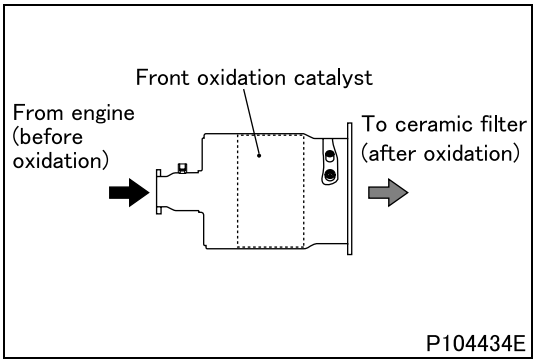

(1) Front oxidation catalyst

- In normal driving condition, unburnt fuel (HC) and part of the particulate matter in the exhaust gas from the engine is purified by this catalyst.
- During filter regeneration, the unburnt fuel (HC) supplied by the post injection is oxidized by the front oxidation catalyst, and the oxidation heat raises exhaust gas temperature.

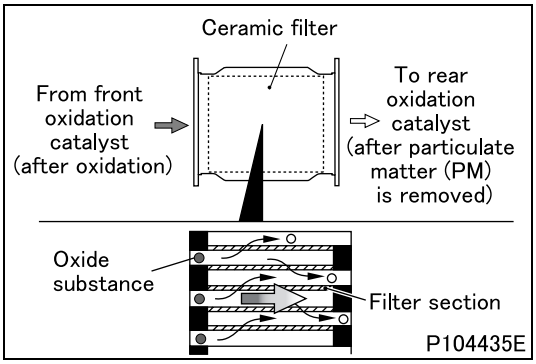

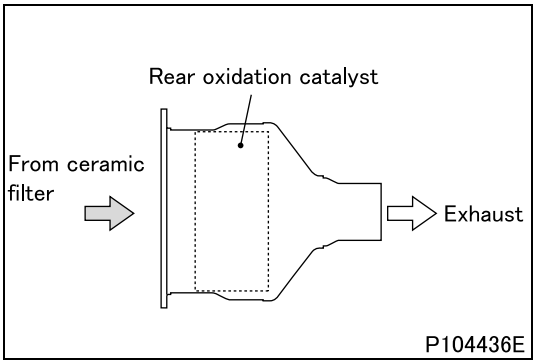

(2) Ceramic filter

- The ceramic filter is an aggregate of thin tubes, and these tubes are closed at either end alternatively. During normal operation, particulate matter is trapped when the exhaust gas enters a tube and passes through the wall of the tube (filter section) to the adjacent tube.
- During regeneration, the particulate matter accumulated in the filter is cleared by burning at high temperature. This, however, cannot remove the calcium (ash) contained in the engine oil and the ash will accumulate in the filter. The excessively accumulated ash may cause early clogging of the ceramic filter. Therefore, the ceramic filter must be cleaned periodically.

(3) Rear oxidation catalyst

- The rear oxidation catalyst oxidize and remove the components (HC and CO) which remain untreated through the diesel particulate filter.

4.4 Electronic control system

(1) System block diagram

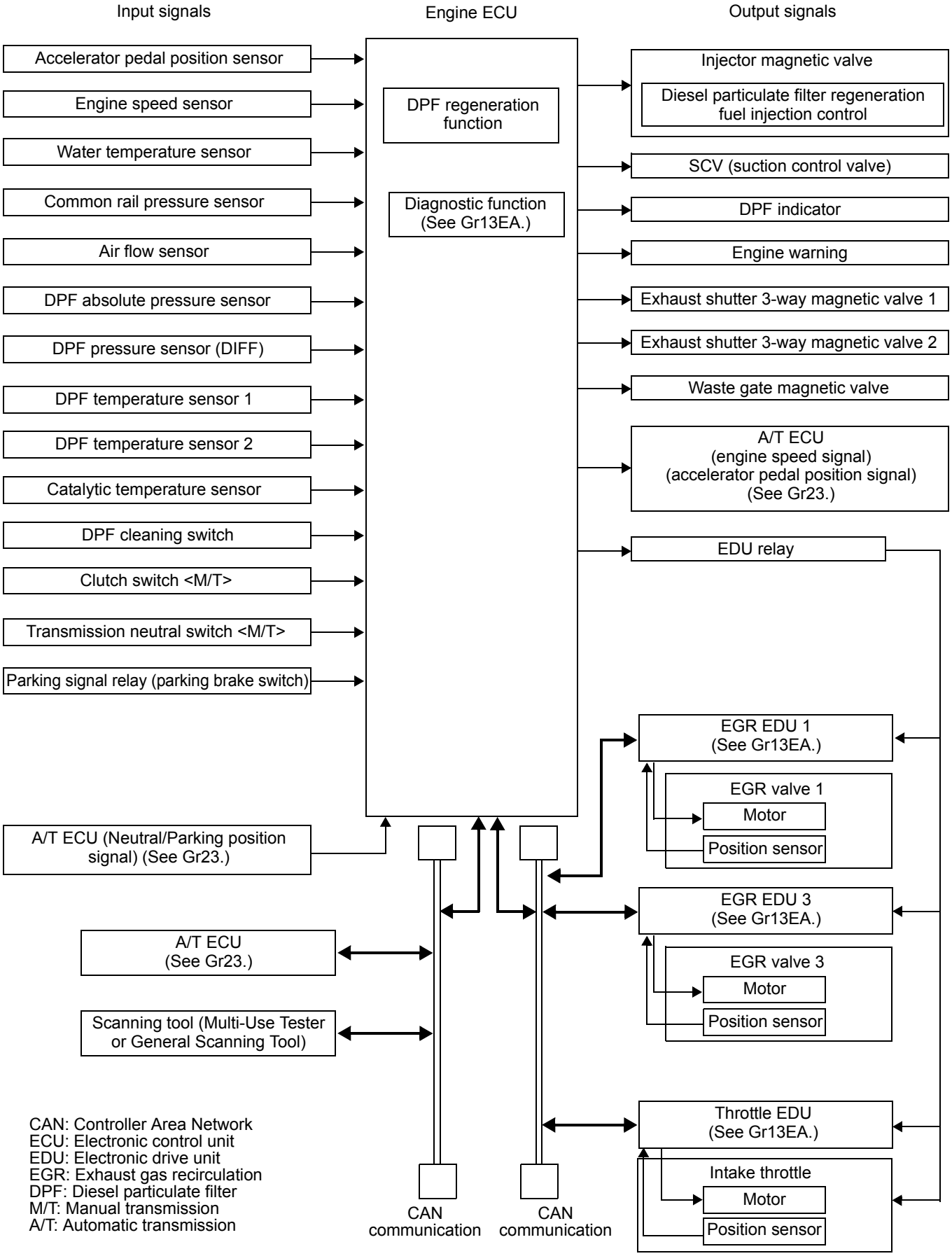

Part	Main function/operation
Accelerator pedal position sensor	Detection of extent of accelerator pedal depression
Engine speed sensor	Detection of engine speed
Water temperature sensor	Detection of coolant temperature
Common rail pressure sensor	Sensing of common rail pressure
Air flow sensor	Detection of intake air flow rate
DPF absolute pressure sensor	Detection of DPF absolute pressure
DPF pressure sensor (DIFF)	Detection of DPF differential pressure
DPF temperature sensor 1	Detection of ceramic filter inlet temperature
DPF temperature sensor 2	Detection of ceramic filter outlet temperature
Catalytic temperature sensor	Detection of front catalyst inlet temperature
DPF cleaning switch	ON/OFF changeover of DPF manual regeneration
Clutch switch <M/T>	Detection of released/pressed condition of clutch pedal (OFF with pedal released)
Transmission neutral switch <M/T>	Detection of transmission neutral condition (OFF with transmission in neutral)
Parking signal relay (parking brake switch)	Detection of parking condition (turns ON when the parking brake is applied)
Injector magnetic valve	DPF regeneration fuel injection control
SCV (suction control valve)	Control of fuel injection pressure
Waste gate magnetic valve	Control of boost pressure
DPF indicator	Illuminates when the particulate matter accumulation in the DPF exceeds a certain value.
Engine warning	Indication of system abnormalities Illuminates when the particulate matter accumulation in the DPF is excessive.
Exhaust shutter 3-way magnetic valve 1	Control of exhaust brake (energizing magnetic valve 1 causes the butterfly valve to fully close.)
Exhaust shutter 3-way magnetic valve 2	Control of DPF regerenration (energizing magnetic valves 1 and 2 causes the butterfly valve to close partway.)
A/T ECU (engine speed data for automatic transmission control)	Output of engine speed for A/T control
A/T ECU (accelerator pedal position for automatic transmission control)	Output of extent of accelerator pedal depression for A/T control
EDU relay	Switching ON/OFF supply of power to EGR EDU and throttle EDU
A/T ECU (Neutral/Parking position signal)	Detection of Neutral (N range) and Parking (P range)
CAN communication (A/T ECU)	• Engine data recognized by the ECU are outputted to the CAN bus to enable systems to obtain data that they need for control. • Each A/T ECU issues signals to the engine ECU to enable it to effect engine control appropriate for each type of system control. (See Gr23 for control of A/T ECU)
CAN communication (throttle EDU and EGR EDU)	• Engine data recognized by the engine ECU are outputted to the CAN bus to enable systems to obtain data that they need for control. • Each EDU opens/closes the valves to increase exhaust gas temperature for DPF regeneration. (See Gr13EA for control of throttle EDU and EGR EDU)

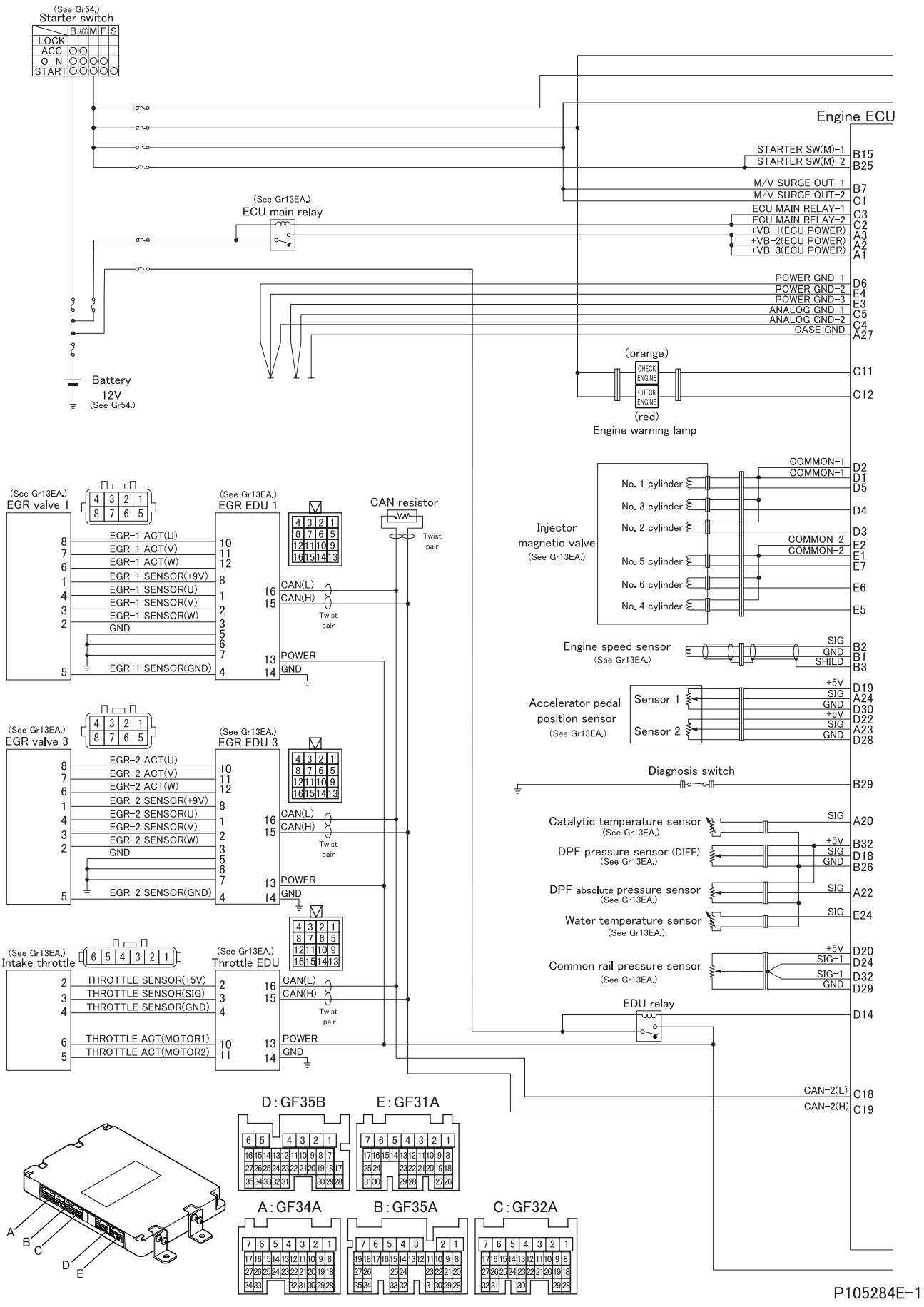
(See Gr54.)
Starter switch
B ACC M F S
LOCK
ACC
O N
START
Engine ECU
STARTER SW(M)-1 B15
STARTER SW(M)-2 B25
M/V SURGE OUT-1 B7
M/V SURGE OUT-2 C1
ECU MAIN RELAY-1 C3
ECU MAIN RELAY-2 C2
+VB-1(ECU POWER) A3
+VB-2(ECU POWER) A2
+VB-3(ECU POWER) A1
(See Gr13EA.)
ECU main relay
POWER GND-1 D6
POWER GND-2 E4
POWER GND-3 E3
ANALOG GND-1 C5
ANALOG GND-2 C4
CASE GND A27
Battery
12V
(See Gr54.)
(orange)
CHECK ENGINE
C11
C12
(red)
Engine warning lamp
(See Gr13EA.)
EGR valve 1
(See Gr13EA.)
EGR EDU 1
CAN resistor
Twist pair
EGR-1 ACT(U)
EGR-1 ACT(V)
EGR-1 ACT(W)
EGR-1 SENSOR(+9V)
EGR-1 SENSOR(U)
EGR-1 SENSOR(V)
EGR-1 SENSOR(W)
GND
EGR-1 SENSOR(GND)
CAN(L)
CAN(H)
POWER
GND
COMMON-1 D2
COMMON-1 D1
No. 1 cylinder D5
No. 3 cylinder D4
No. 2 cylinder D3
COMMON-2 E2
COMMON-2 E1
No. 5 cylinder E7
No. 6 cylinder E6
No. 4 cylinder E5
Injector magnetic valve
(See Gr13EA.)
Engine speed sensor
(See Gr13EA.)
SIG B2
GND B1
SHILD B3
Accelerator pedal position sensor
(See Gr13EA.)
Sensor 1
Sensor 2
+5V D19
SIG A24
GND D30
+5V D22
SIG A23
GND D28
Diagnosis switch
B29
EGR valve 3
EGR EDU 3
EGR-2 ACT(U)
EGR-2 ACT(V)
EGR-2 ACT(W)
EGR-2 SENSOR(+9V)
EGR-2 SENSOR(U)
EGR-2 SENSOR(V)
EGR-2 SENSOR(W)
EGR-2 SENSOR(GND)
Catalytic temperature sensor
(See Gr13EA.)
SIG A20
DPF pressure sensor (DIFF)
(See Gr13EA.)
+5V B32
SIG D18
GND B26
DPF absolute pressure sensor
(See Gr13EA.)
SIG A22
Water temperature sensor
(See Gr13EA.)
SIG E24
Intake throttle
Throttle EDU
THROTTLE SENSOR(+5V)
THROTTLE SENSOR(SIG)
THROTTLE SENSOR(GND)
THROTTLE ACT(MOTOR1)
THROTTLE ACT(MOTOR2)
Common rail pressure sensor
(See Gr13EA.)
+5V D20
SIG-1 D24
SIG-1 D32
GND D29
EDU relay
D14
CAN-2(L) C18
CAN-2(H) C19
D : GF35B
E : GF31A
A : GF34A
B : GF35A
C : GF32A
A
B
C
D
E

P105284E-1

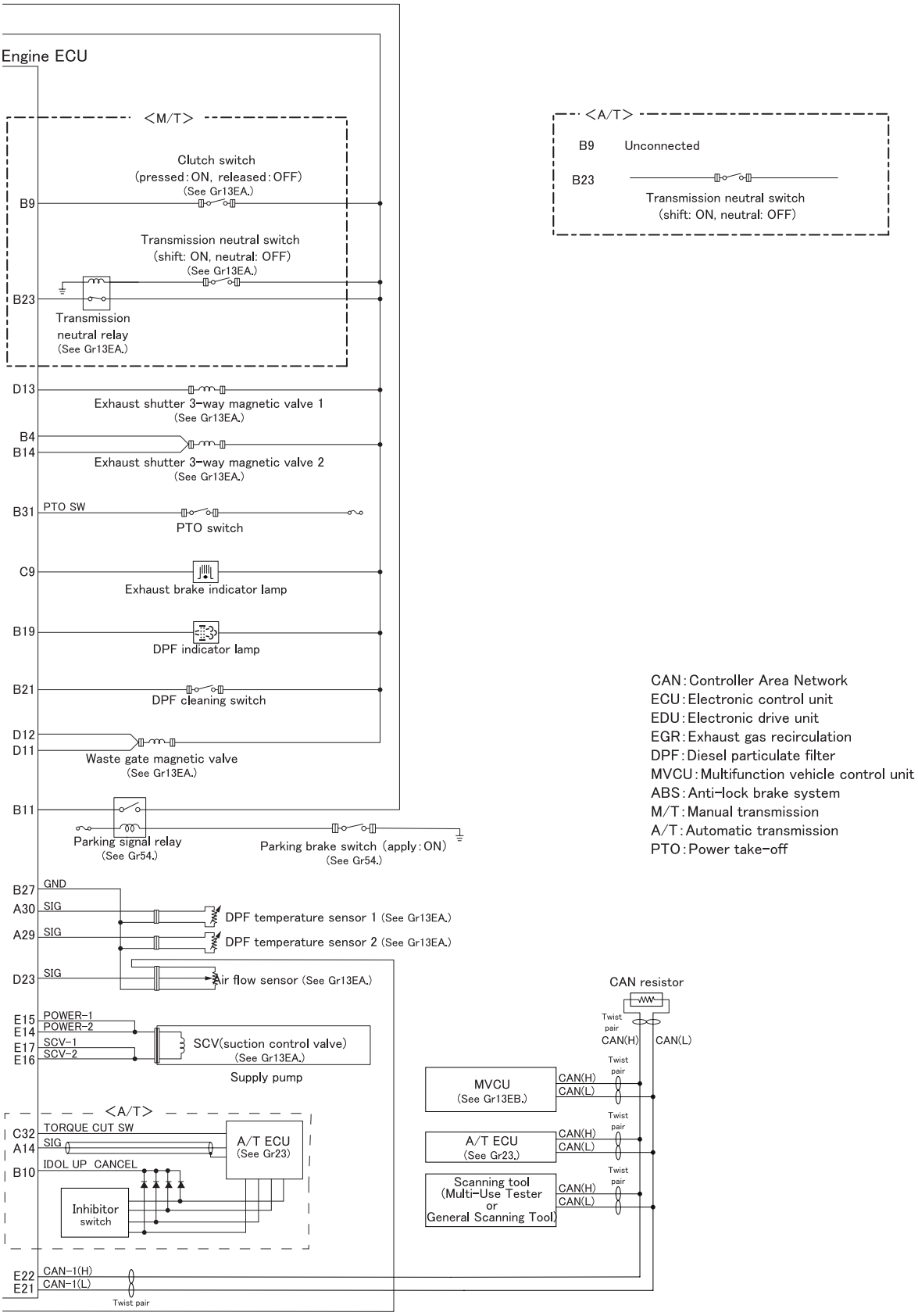

CAN : Controller Area Network
ECU : Electronic control unit
EDU : Electronic drive unit
EGR : Exhaust gas recirculation
DPF : Diesel particulate filter
MVCU : Multifunction vehicle control unit
ABS : Anti-lock brake system
M/T : Manual transmission
A/T : Automatic transmission
PTO : Power take-off

P105284E-2

Possible causes \ Symptoms			Engine is difficult to start	Exhaust gas is black	Exhaust gas is white	Engine output is insufficient	Fuel consumption is too high	Intake and exhaust system vibrates and/or makes abnormal noises	Reference Gr
Air cleaner		Clogged air cleaner element	O	O		O			
Turbocharger	Cartridge assembly	Defective bearing		O		O		O	
		Carbon deposits on turbine wheel		O		O			
		Interference between turbine wheel and turbine back plate		O		O		O	
		Interference between turbine wheel and turbine housing		O		O		O	
		Bent shaft		O		O		O	
		Damaged turbine wheel		O		O		O	
		Interference between compressor wheel and compressor cover		O		O		O	
		Seizure of thrust sleeve and/or thrust bearing		O		O		O	
		Damaged compressor wheel		O		O		O	
		Oil leakage due to worn piston ring and/or insert		O	O		O		
		Poorly installed piston ring					O		
		Unsmooth sliding of inner parts due to clogged lubricating oil pipe and/or eyebolt		O		O			
		Damaged oil seals due to clogged oil return pipe			O		O		
	Poorly mounted compressor cover			O		O	O	O	
	Poorly mounted turbine housing					O		O	
Intercooler						O			
Throttle actuator		Butterfly valve stuck in closed position		O	O	O			Gr13EA
		Poorly adjusted butterfly valve		O	O	O			
Deformed front pipe and/or tail pipe								O	
Poorly installed front pipe and/or tail pipe								O	
DPF	Clogged filter		O			O			
	Damaged diesel particulate filter			O				O	
Inappropriate valve clearance				O					Gr11
Defective cylinder head gasket				O					
Worn valve and valve seat and/or carbon deposits				O					
Weakened valve springs				O					
Worn and/or damaged piston rings					O		O		
Worn and/or damaged piston ring grooves					O		O		
Malfunctioning cooling system				O					Gr14
Excessive engine oil level					O				Gr12
Seizure of main moving parts				O					Gr11
Uneven or excessive fuel injection				O					Gr13EA

M E M O

1. Measurement of Turbocharger Boost Pressure

Service standards

Location	Maintenance item		Standard value	Limit	Remedy
–	Boost pressure (at ambient temperature of 20°C {68°F} and atmospheric pressure of 100 kPa {29.9 in.Hg, 760 mmHg})	Boost pressure gauge reading	–	95 kPa {28.1 in.Hg, 710 mmHg} /3210 rpm	Inspect or adjust
		Multi-Use Tester reading (See Gr13EA.)	–	28 psi /3210 rpm	

Special tools

Mark	Tool name and shape	Part No.	Application
ⓐ	Boost pressure gauge 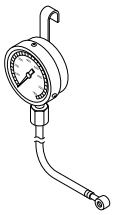 P01524	MH061366	Measurement of boost pressure

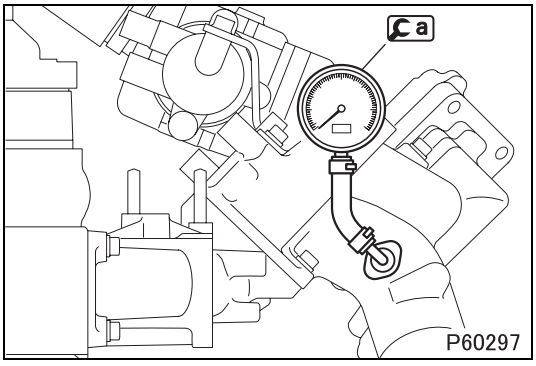

P60297

- Before measuring the boost pressure, clean or replace the air cleaner element.
- Remove the connector from ⓐ.
- Remove the boost hose. Install ⓐ onto the nipple.
- Warm up the engine completely. Then, with the engine running at the no-load maximum speed, measure the boost pressure. At the same time, note down the engine speed and ambient temperature at that time.

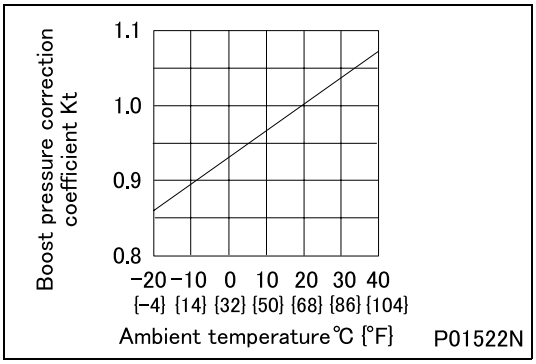

P01522N

- The boost pressure measured above is not the true boost pressure. The measurement needs to be corrected as described below.

[Correction for ambient temperature]

- From the graph, determine the boost pressure correction coefficient Kt for the ambient temperature.

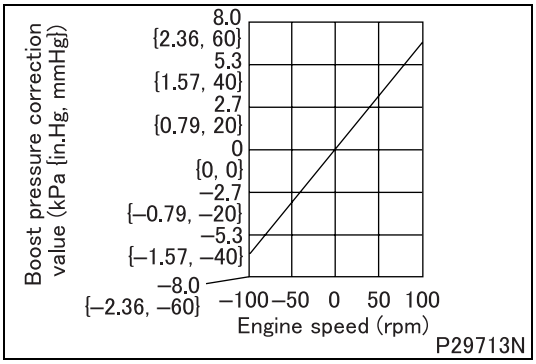

[Correction for engine speed]

- Subtract the no-load median maximum speed from the engine speed noted during the boost pressure measurement. Using the graph shown on the left, obtain the boost pressure correction value Pa that corresponds to the difference obtained from the subtraction.
- No-load median maximum speed: 3180 rpm

[Calculation of corrected boost pressure]

- If the measured boost pressure is P, the corrected boost pressure Pb is determined as follows:

Pb = KtP + Pa

Kt: Boost pressure correction coefficient for ambient temperature

P: Measured boost pressure

Pa: Boost pressure correction value

- If Pb is out of specification, the turbocharger must be inspected and adjusted.

2. Cleaning and Inspection of Air Cleaner Element

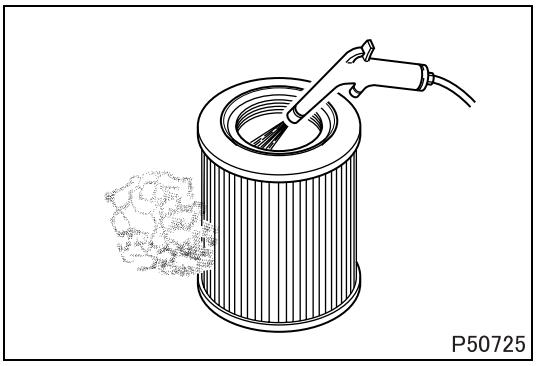
P50725

■ **Cleaning: Filter element**

- Blow a jet of compressed air at a pressure not higher than 685 kPa {100 psi, 7 kgf/cm^2} against the inside surfaces of the element.
- Move the compressed air jet up and down along all pleats of the filter paper element.

CAUTION ⚠

- **Do not strike the element or hit it against another object to remove dust.**
- **Do not blow compressed air against outside surfaces of the element.**

◆Inspection procedure◆

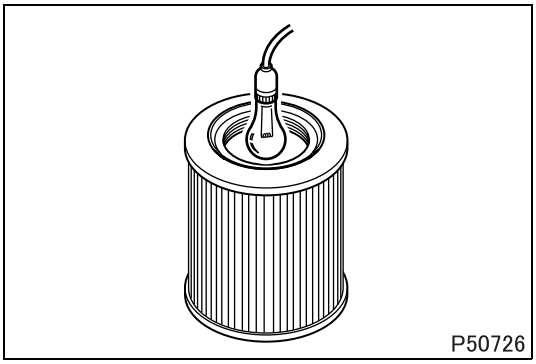
P50726

■ **Inspection: Element**

- Shine some electric light inside the element.
- Replace the element if thin spots or broken parts are evident in the filter paper, or if the packing at the top of the element is damaged.
  Also replace the element if the dust on the element is damp with oily smoke or soot, regardless of the replacement schedule.

◆Installation procedure◆

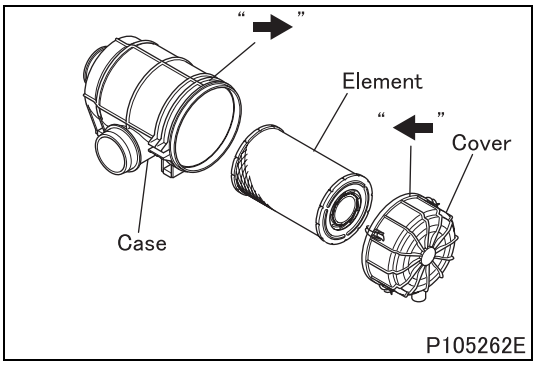

P105262E

■ **Installation: Air cleaner cap**

➡: Alignment mark

3. Diesel Particulate Filter Unit Inspection for Clogging and Cleaning the Diesel Particulate Filter Unit

CAUTION ⚠

- **Diesel particulate filter has become very hot after the operation of engine. Cool down the diesel particulate filter sufficiently so as not to get burnt.**
- **The ceramic filter must be cleaned at first 320,000 km {200,000 miles} of driving, and then every 240,000 km {150,000 miles} of driving. Otherwise, ash will accumulate in the filter and the filter may be damaged.**

Service standards

Location	Maintenance item	Standard value	Limit	Remedy
–	Diesel particulate filter differential pressure (after regeneration and cleaning, at no-load max. speed)	Less than 10 kPa {1.5 psi, 0.1 kgf/cm^2}	10 kPa or higher {1.5 psi, 0.1 kgf/cm^2}	Replace

Special tools

Mark	Tool name and shape	Part No.	Application
a	*Pulse cleaner	(*X007954)	Washing of ceramic filter
b	Flange nut (M10) (not used by Donaldson)	MF434105	
c	Drain plug (M12 × 1.25)	MF665003	
d	Drain plug (M14 × 1.5)	MF665004	
e	Gasket (M12)	MF665004	
f	Gasket (M14)	MF660065	

*: Recommend Donaldson “Heavy Duty Diesel Engine DPF Pulse Cleaner” to cleaning the DPF filter soot.
( ): reference No.

3.1 Preparation

- Place the transmission to neutral position.
- Turn the steering wheel in neutral position. Apply the parking brake securely.
- Turn off the air conditioner not to increase the engine speed.
- Connect the Multi-Use Tester. (See Gr00.)
- Check if there is any diagnosis code stored in the memories of the electronic control units. Repair if any fault is found.
- Warm up the engine until the coolant temperature becomes 70°C {158°F}. (Check this by Multi-Use Tester service data “35: coolant temperature”.)

3.2 Inspection procedure

- Perform the inspection in accordance with the following flowchart.

CAUTION ⚠

- **The differential pressure of diesel particulate filter, that is, the pressure difference between the inlet and outlet of the diesel particulate filter, may exceed 30 kPa {4.4 psi, 0.3 kgf/cm^2} due to the clogging of the ceramic filter. If the diesel particulate filter regeneration is performed using Multi-Use Tester actuator test "DPF regeneration (park)", the abnormal combustion of the particulate matter may make the diesel particulate filter excessively high temperature, resulting in damage of the diesel particulate filter. Before performing the diesel particulate filter regeneration, therefore, be sure to check that the diesel particulate filter differential pressure is less than 30 kPa {4.4 psi, 0.3 kgf/cm^2}.**
- **When replacing the electronic control unit to a new one, current ash accumulation data must be copied to the new electronic control unit.**
- **For data copying procedure, consult your nearest MITSUBISHI FUSO dealer or MITSUBISHI FUSO TRUCK OF AMERICA, Inc.**

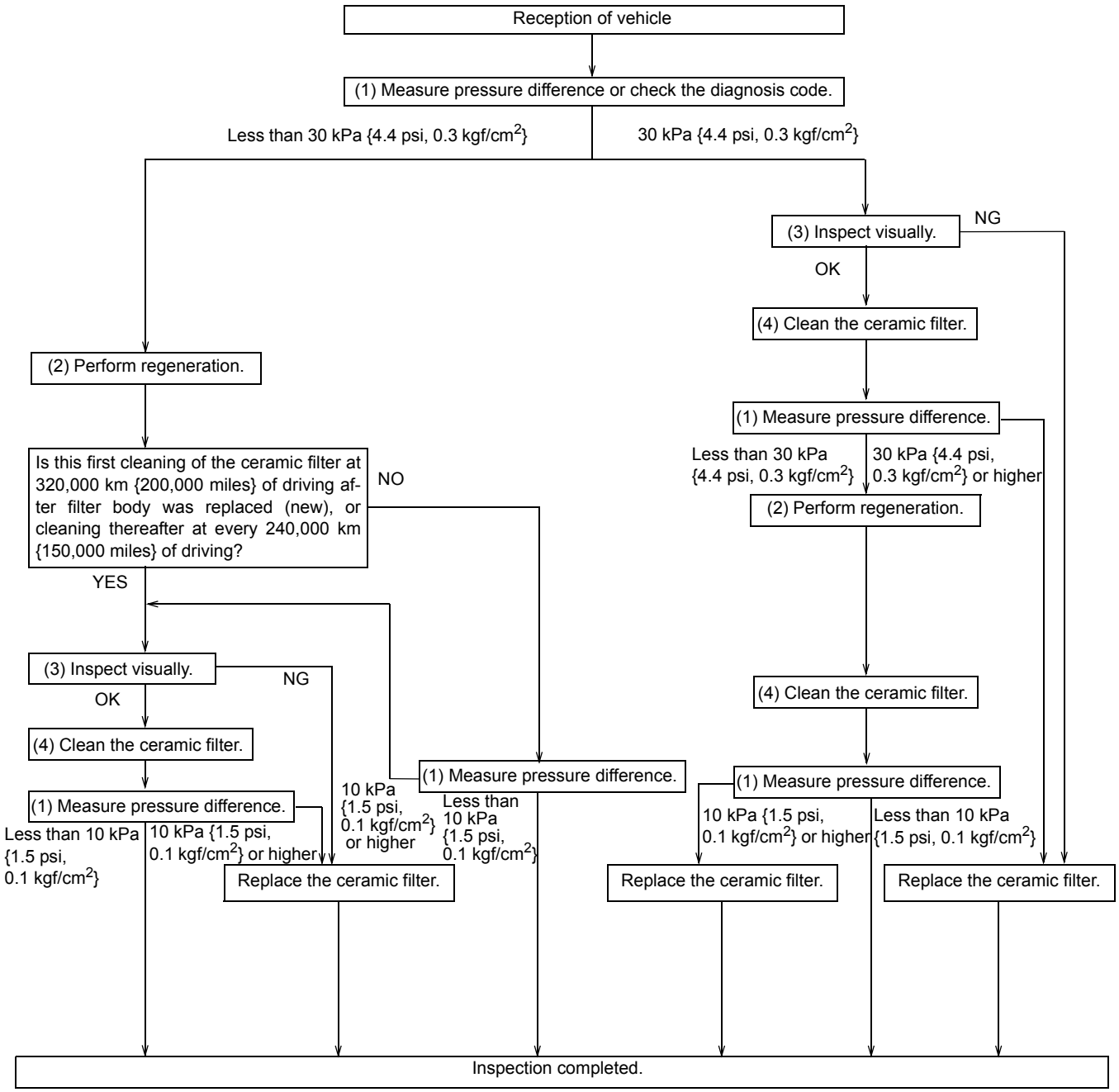

(1) Measurement of pressure difference

- Measure the pressure difference with the accelerator pedal fully pressed.
- Measurement can be performed using Multi-Use Tester service data “32: DPF pressure difference”.

(2) Regeneration

- Perform Multi-Use Tester actuator test “A5: DPF regeneration (parked)”.

CAUTION ⚠

- **The exhaust gas during regeneration is extremely hot. Be sure to confirm that there is no flammables around the rear of the vehicle.**

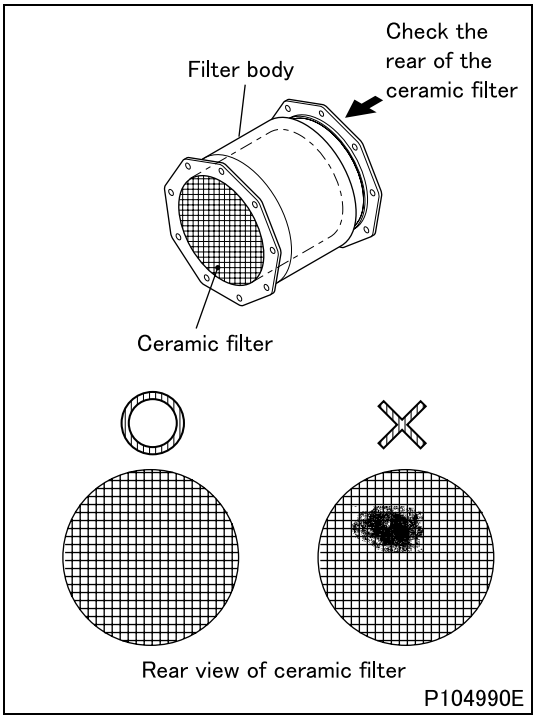

(3) Visual inspection

- Disassemble the diesel particulate filter and check the following.
  - Check if a large amount of soot adheres inside the ceramic filter.
  - Damage in the rear of the ceramic filter.
- If a large amount of soot adheres inside the ceramic filter or if a damage is found on the ceramic filter, engine-related fault may be suspected. Replace the diesel particulate filter.

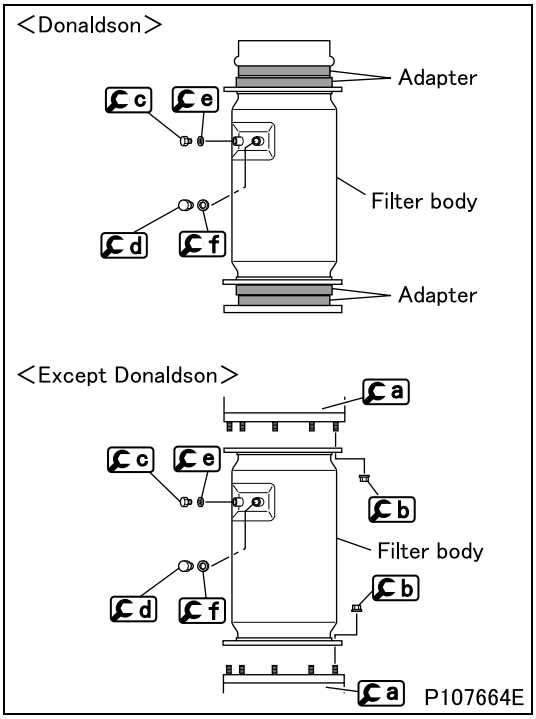

(4) Cleaning

- Fit the adapter to the filter body. <Donaldson>
- Fit [a] to the filter body with [b] and tighten [b] to the specified torque (43 N·m {32 ft.lbs, 4.4 kgf·m}). <Except Donaldson>
- Fit [c] and [e] to the sensor mounting hole on the filter body and tighten them to the specified torque (30 N·m {22 ft.lbs, 3.1 kgf·m}).
- Fit [d] and [f] to the sensor mounting hole on the filter body and tighten them to the specified torque (40 N·m {30 ft.lbs, 4.1 kgf·m}).

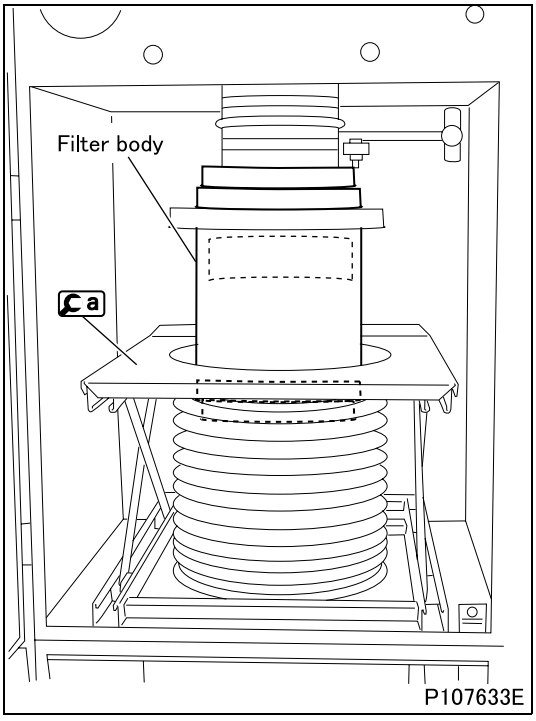

- Set the filter body in [a] with its rear of the filter body side (outlet body installation side) upward.
- Be sure to fit [a] and the filter body with no air leaks between them.
- Set the air pressure. (refer to its instruction manual)
- Set the timer to about 15 minutes (refer to its instruction manual) and perform cleaning.
- For the handling procedure of [a], refer to its instruction manual.

4. Resetting the DPF-related Information (Resetting Electronic Control Unit)

- On the regeneration control type as diesel particulate filter system, the engine electronic control unit stores many DPF-related information to control the diesel particulate filter regeneration as diesel particulate filter history.
- This history is automatically reset by the engine electronic control unit when the diesel particulate filter regeneration is performed.
- If the ceramic filter is replaced or cleaned without regeneration, reset the DPF history using Multi-Use Tester as follows.

4.1 Preparation

- This operation should be performed under the following conditions.
  - Starter switch: ON (but do not start the engine)
  - Vehicle parked
  - Diagnosis switch: ON (fuse installed)
  - Transmission: Neutral (or P position for automatic transmission)

4.2 Resetting procedure

(1) Error while operating the Multi-Use Tester

[Communication error] screen

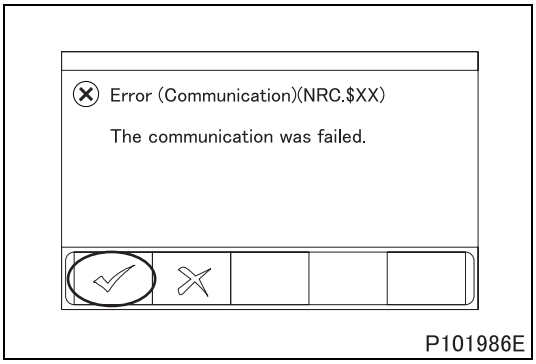

- This screen will appear when a reject response signal is sent from the engine electronic control unit to the Multi-Use Tester while performing any operation.
- In this case, check if the conditions for the execution of the procedure are satisfied and retry from the beginning.
- Click “OK”.

(2) System selection

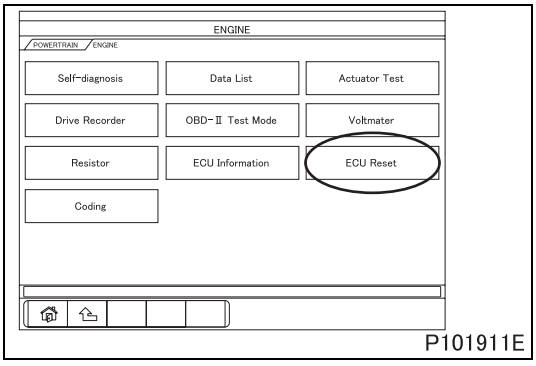

- From the System selection menu, select “Engine/Transmission”. The engine control-related menu will appear.
- Select “ECU Reset”.

(3) ECU reset function selection

[ECU reset] screen

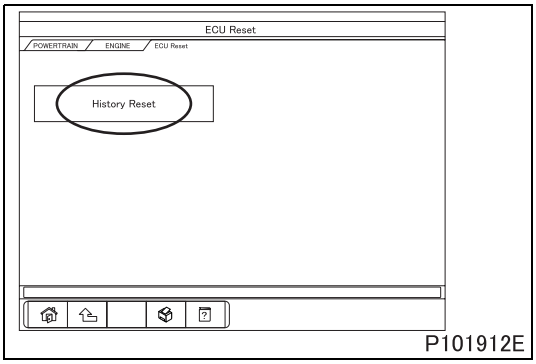

- Select “History Reset”.

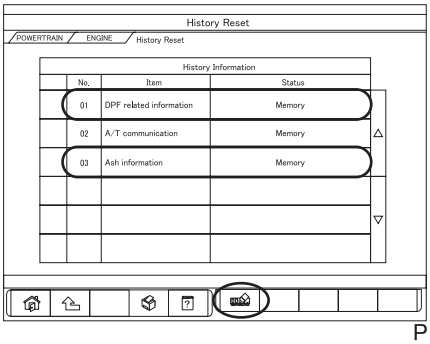

P101913E

(4) History reset

[History reset] screen

- Depending on the action performed on the ceramic filter, the contents of resetting differ.
  Filter replacement: 01 “DPF-related information”
  Filter cleaning: 03 “Ash information”
- Click “Reset” button.
  If the status column shows “No memory stored”, no resetting action required. Finish this procedure.

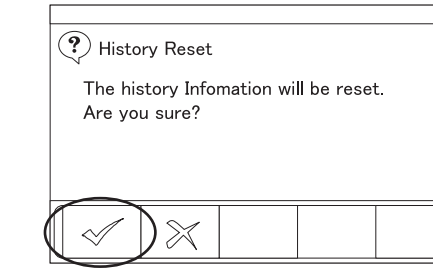

P102065E

[History reset confirmation] screen

- Click “OK” button.

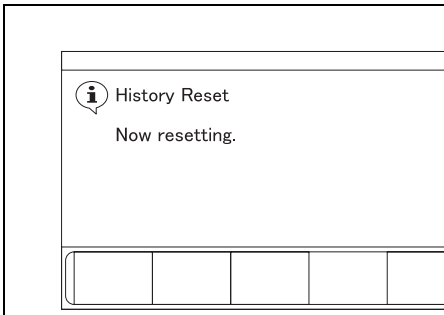

P102066E

[History resetting] screen

- During resetting, do nothing and wait for a while.

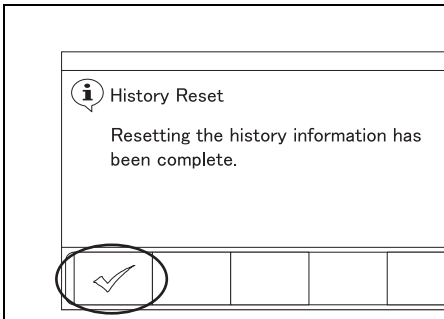

P102067E

[History reset completed] screen

- This screen will appear when resetting of the history has finished. Click “OK” button and return to [History reset] screen.

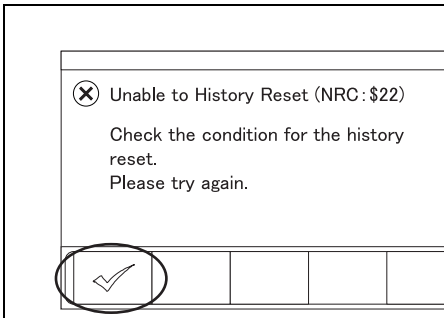

P102068E

[History reset condition error] screen

- This screen will appear when a failure signal is sent from the engine electronic control unit to the Multi-Use Tester during resetting.
- In this case, check if the Multi-Use Tester and the vehicle (engine electronic control unit) is connected correctly and if the conditions for the execution of this procedure are satisfied. Then click “OK” to return to the [History reset] screen.

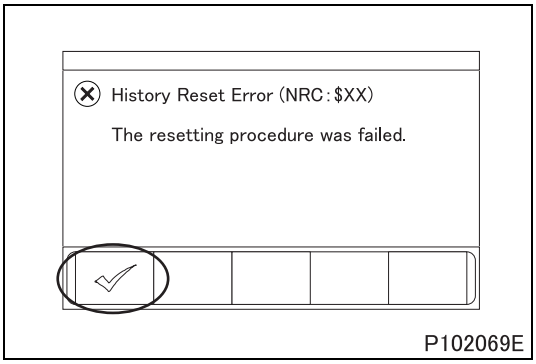

P102069E

[History reset failed] screen

- This screen will appear when the communication error between Multi-Use Tester and the engine electronic control unit or the resetting error occurs.
- In this case, check if the Multi-Use Tester and the vehicle (engine electronic control unit) is connected correctly and if the conditions for the execution of this procedure are satisfied. Then click “OK” to return to the [History reset] screen.

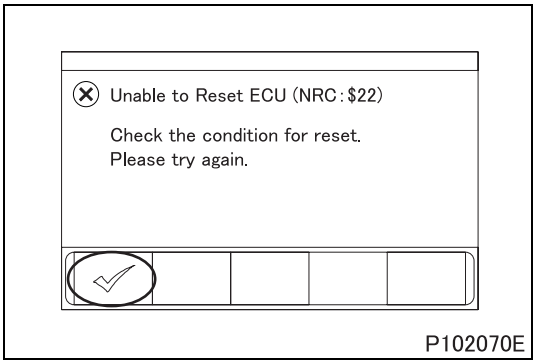

P102070E

[ECU reset condition error] screen

- This screen will appear when an execution failure signal is sent from the engine electronic control unit to the Multi-Use Tester during resetting.
- In this case, recheck the conditions of the vehicle and retry from the beginning.
- Click “OK” to return to the [History reset] screen.

AIR CLEANER AND AIR DUCT

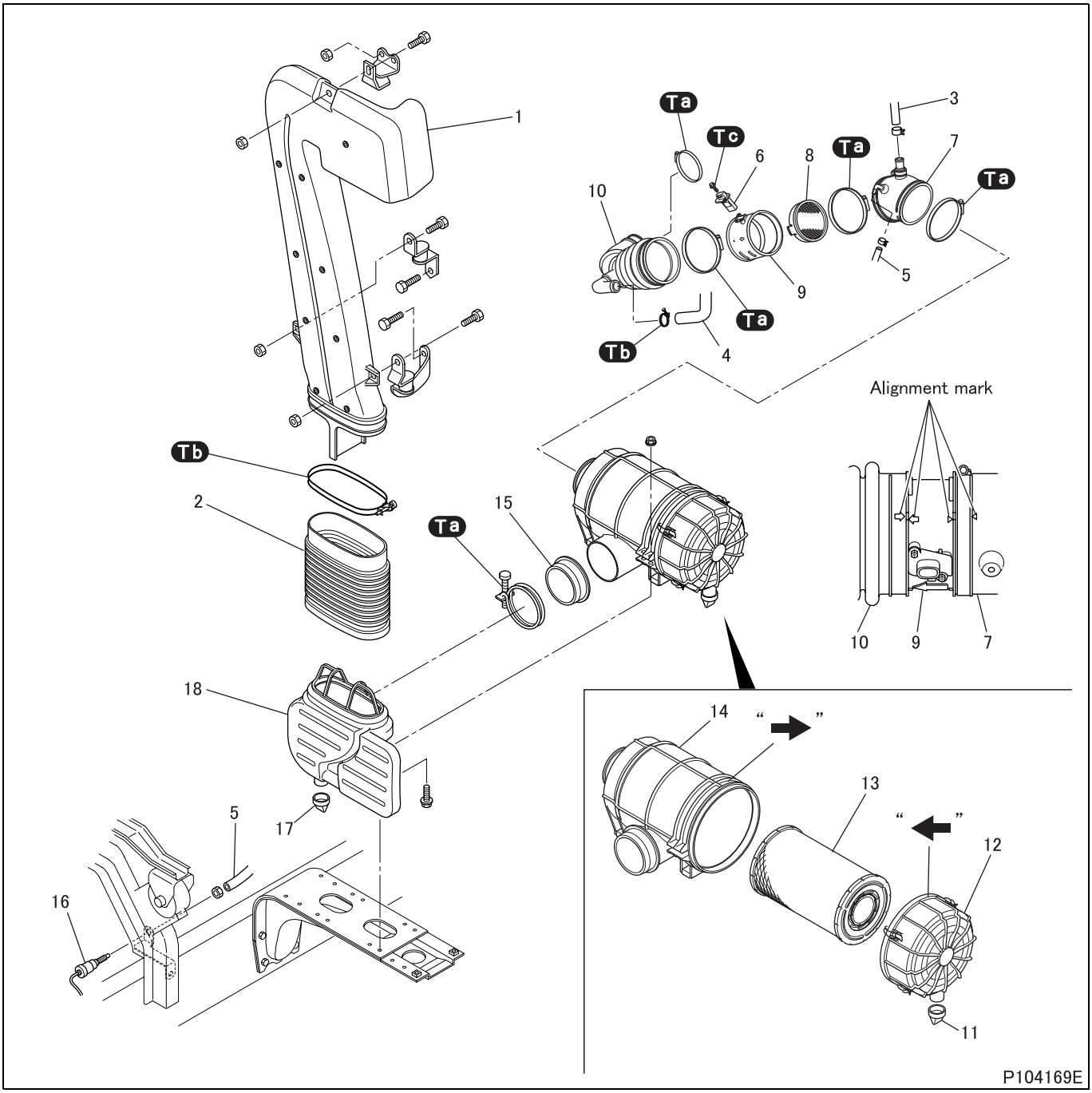

● **Removal sequence**

1 Upper air duct
2 Rubber boot
3 Air hose
4 Breather hose
5 Air tube
6 Air flow sensor
7 Air hose
8 Air flow sensor mesh
9 Air flow sensor duct
10 Air hose
11 Vacuator valve
12 Cover
13 Element
14 Case
15 Adaptor
16 Dust indicator
17 Vacuator valve
18 Lower duct

● **Installation sequence**

Follow the removal sequence in reverse.

Service standards

Location	Maintenance item	Standard value	Limit	Remedy
16	Operation of dust indicator under specified negative pressure	7.47 ± 0.57 kPa {2.21 ± 0.17 in.Hg, 762 ± 58 mmH_2O}	–	Replace

Tightening torque (Unit: N·m {ft.lbs, kgf·m})

Mark	Parts to be tightened	Tightening torque	Remarks
Ta	Clamp	4.0 to 5.0 {3.0 to 3.7, 0.4 to 0.5}	–
Tb	Clamp	3.0 to 3.5 {2.2 to 2.6, 0.3 to 0.35}	–
Tc	Bolt (air flow sensor mounting)	1.2 to 1.8 {0.9 to 1.3, 0.12, 0.18}	–

◆Cleaning procedure◆

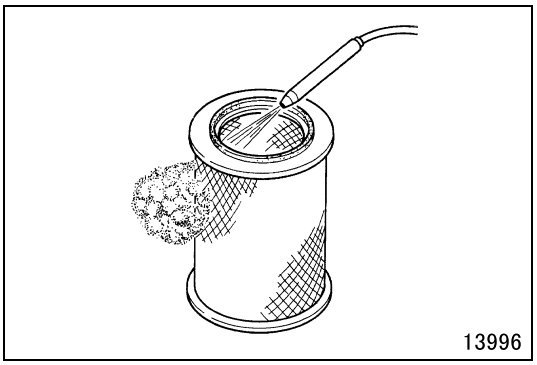
13996

■ Cleaning: Element

- Blow a jet of compressed air at a pressure not higher than 685 kPa {100 psi, 7 kgf/cm^2} against the inside surfaces of the element.
- Move the compressed air jet up and down along all pleats of the filter paper element.

CAUTION ⚠

- **For element cleaning intervals, see the Maintenance Manual. More frequent cleaning than necessary could damage the element or contaminate the engine inside with dust and foreign matter.**
- **Do not strike the element or hit it against another object to remove dust.**
- **Do not blow compressed air against outside surfaces of the element.**

■ Cleaning: Air flow sensor mesh

- If the mesh of the air flow sensor is contaminated or clogged, clean it by using compressed air or a cleaning agent.
- After cleaning, fully dry the air flower sensor mesh.

◆Inspection procedure◆

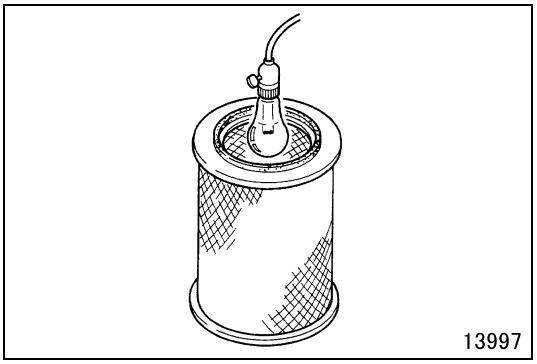
13997

■ Inspection: Element

- Shine some electric light inside the element.
- Replace the element if there are broken or thinned out spots in the filter paper, or if seal is damaged between the element and case contact surface.
  Also, replace the element whenever dust on the element is found damp with lampblack or soot, irrespective of replacement interval.

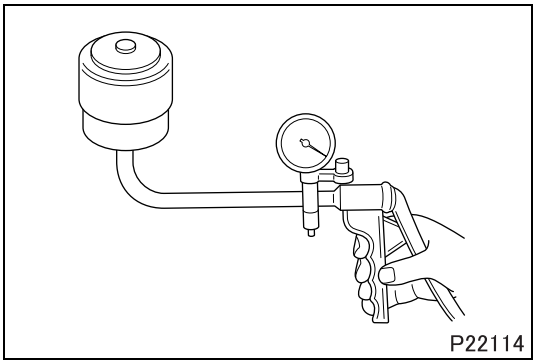

■ **Inspection: Operation of dust indicator under specified negative pressure**

- Apply negative pressure to the dust indicator, and take the reading when the red signal appears in the dust indicator window.
- If the measurement deviates from the standard value, replace the dust indicator.

◆Installation procedure◆

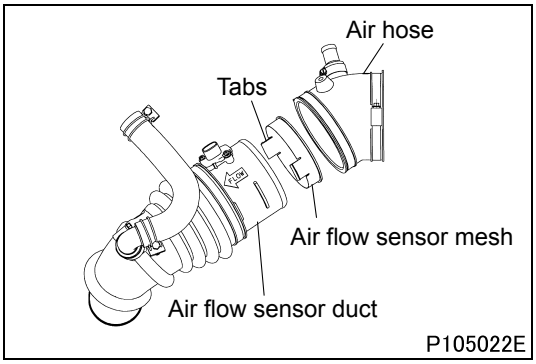

■ **Installation: Air flow sensor mesh**

- Insert tabs of the air flow sensor mesh into the inside slots of the air flow sensor duct.

M E M O

TURBOCHARGER

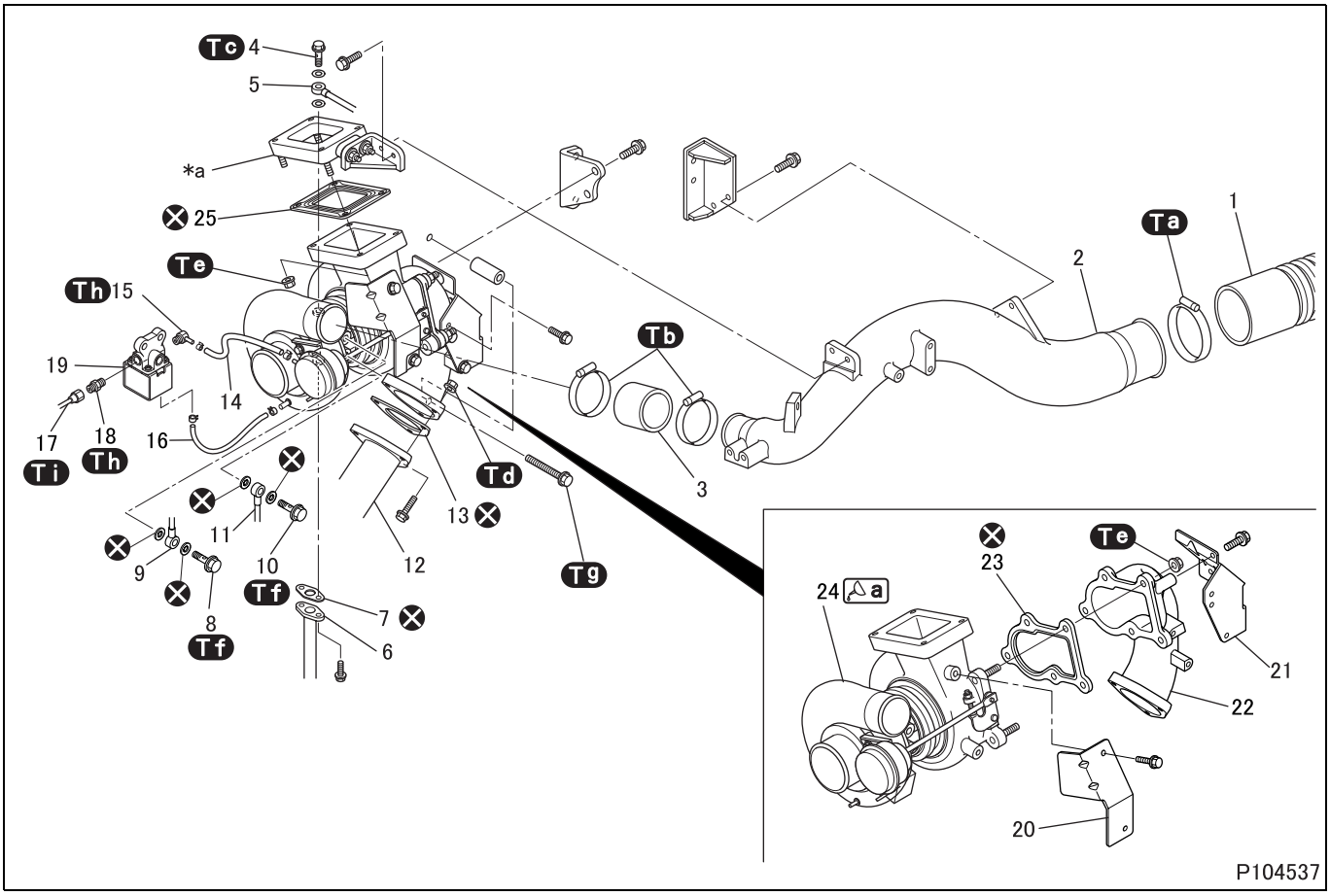

● **Removal sequence**

1 Air inlet hose
2 Air inlet pipe
3 Rubber hose
4 Eyebolt
5 Oil feed pipe
6 Oil return pipe
7 Gasket
8 Eyebolt
9 Water pipe
10 Eyebolt
11 Water pipe
12 Front pipe
13 Gasket
14 Air hose
15 Connector
16 Air hose
17 Air pipe
18 Connector
19 Wast gate magnetic valve
20 Exhaust pipe cover
21 Turbocharger cover
22 Exhaust pipe
23 Gasket
24 Turbocharger
(See later section.)
25 Gasket

***a**: Exhaust manifold
⊗: Non-reusable parts

● **Installation sequence**

Follow the removal sequence in reverse.

Tightening torque (Unit: N·m {ft.lbs, kgf·m})

Mark	Parts to be tightened	Tightening torque	Remarks
Ta	Clamp (air inlet hose mounting)	8.0 to 9.0 {5.9 to 6.6, 0.8 to 0.9}	–
Tb	Clamp (rubber hose mounting)	5.0 {3.6, 0.5}	–
Tc	Eyebolt (oil feed pipe mounting)	21 {15, 2.1}	–
Td	Nut (exhaust pipe and front pipe mounting)	105 ± 15 {77 ± 11, 11 ± 1.6}	–
Te	Nut (exhaust pipe mounting)	42 {31, 4.3}	–
	Nut (turbocharger mounting)		
Tf	Eyebolt (water pipe mounting)	39 {29, 4.0}	–
Tg	Bolt (exhaust pipe mounting)	46 {34, 4.7}	–
Th	Connector	19.6 to 49 {14 to 36, 2.0 to 5.0}	–
Ti	Air pipe	25 {18, 2.6}	–

Lubricant and/or sealant

Mark	Points of application	Specified lubricant and/or sealant	Quantity
a	Turbocharger (to be filled with engine oil)	Engine oil	As required

◆Installation procedure◆

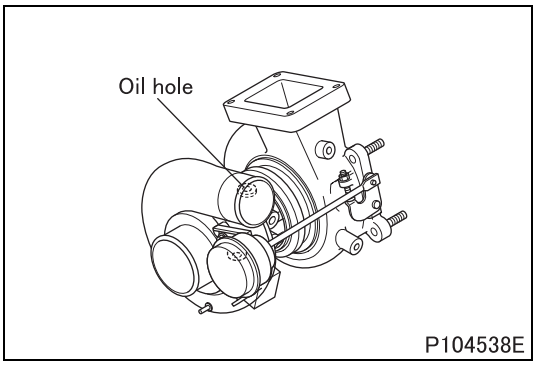

■ Installation: Turbocharger

- Before installing the turbocharger assembly, pour engine oil into the oil hole to ensure smooth operation of the internal parts.

Turbocharger

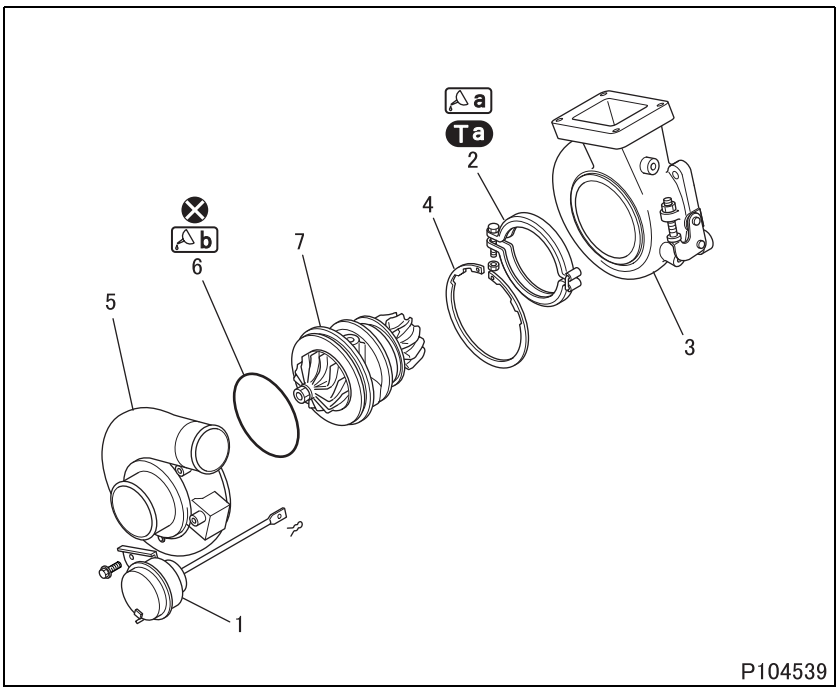

● Disassembly sequence

1 Actuator
2 Coupling
3 Turbine housing
4 Snap ring
5 Compressor cover
6 O-ring
7 Cartridge assembly

⊗: Non-reusable parts

● Assembly sequence

Follow the disassembly sequence in reverse.

CAUTION ⚠

- **The cartridge assembly cannot be taken to pieces. Replace the whole assembly if the turbine wheel or compressor wheel is damaged and when the cartridge does not rotate smoothly.**

Service standards (Unit: mm {in.})

Location	Maintenance item			Standard value	Limit	Remedy
7	Cartridge assembly	Play in axial direction of shaft		0.05 to 0.09 {0.0020 to 0.0035}	0.1 {0.0039}	Replace
		Play perpendicular to axis of shaft	Turbine wheel end	0.40 to 0.53 {0.016 to 0.021}	0.58 {0.023}	Replace
			Compressor wheel end	0.55 to 0.66 {0.022 to 0.026}	0.72 {0.028}	Replace

Tightening torque (Unit: N·m {ft.lbs, kgf·m})

Mark	Parts to be tightened	Tightening torque	Remarks
Ta	Bolt (coupling tightening)	3.9 to 4.9 {2.9 to 3.6, 0.4 to 0.5}	Wet

Lubricant and/or sealant

Mark	Points of application	Specified lubricant and/or sealant	Quantity
a	Thread of bolts	Molybdenum disulfide grease [NLGI No.2 (Li soap)]	As required
b	O-ring	Engine oil	As required

◆Work before removal◆

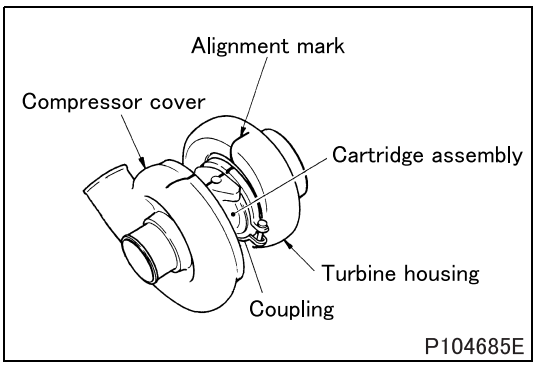

■ **Alignment mark**

- Put alignment marks on the coupling, turbine housing, compressor cover and cartridge assembly.

◆Removal procedure◆

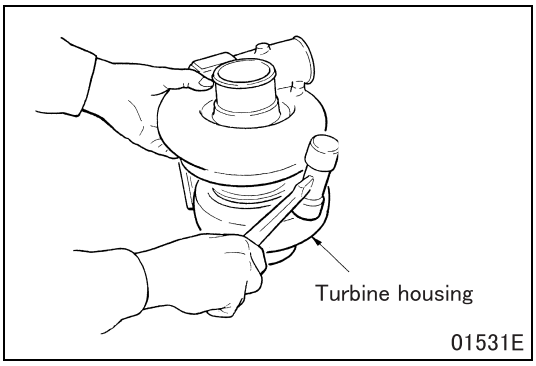

■ **Removal: Turbine housing**

CAUTION ⚠

- **Lightly tap around the entire periphery of the turbine housing with a rubber-faced hammer, taking care not to cause damage.**
- **The blades on the cartridge assembly are easily bent. Make sure that they do not strike the turbine housing.**

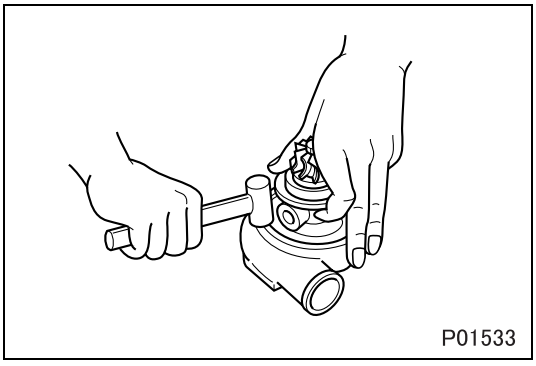

■ **Removal: Compressor cover**

CAUTION ⚠

- **Lightly tap around the entire periphery of the compressor cover with a rubber-faced hammer, taking care not to cause damage.**
- **The blades on the cartridge assembly are easily bent. Make sure that they do not strike the compressor cover.**

◆Work after disassembly◆

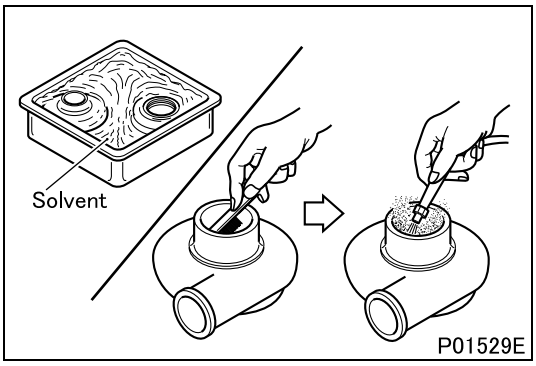

■ **Cleaning**

- Before cleaning the parts, carry out a visual inspection for any marks of burns or wear that may become difficult to find after the cleaning. If any defects are evident, replace the part(s).
- Immerse the disassembled parts in an inflammable solvent (add four to nine parts of water to New Hope's Oil Clean). Take out the parts from the solvent and dry them with compressed air.
  If there is any solid matter remaining on the parts, remove them with a plastic scraper or a bristle brush.

CAUTION ⚠

- **Do not immerse the cartridge assembly in the solvent. If doing so, O-rings in the cartridge assembly will swell and may adversely affect to the function of the turbocharger.**

- Reimmerse the parts in the solvent.
- Dry each part with compressed air.

◆Inspection procedure◆

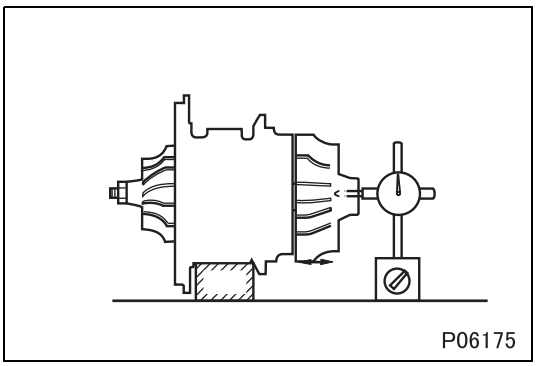

■Inspection: Cartridge assembly

- If the measurement exceeds the specified limit, replace the cartridge assembly.

(1) Play in axial direction of shaft

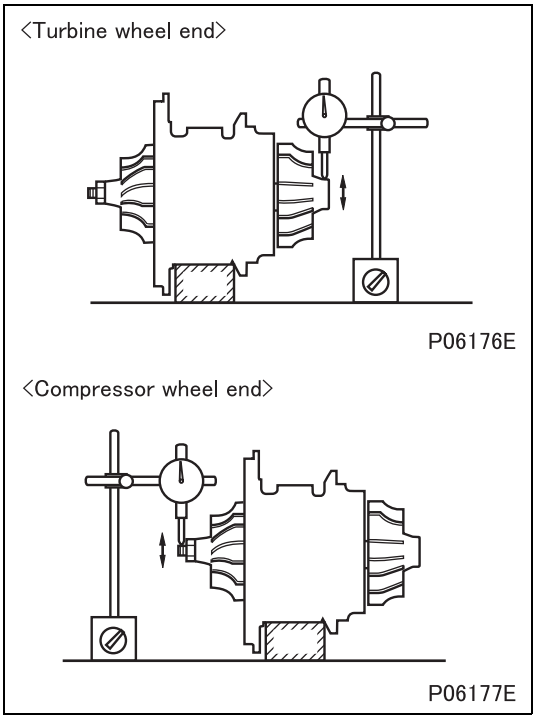

(2) Play perpendicular to axis of shaft

◆Installation procedure◆

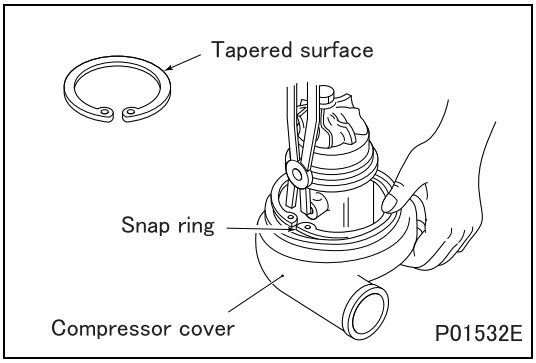

■ Installation: Snap ring

- With the tapered surface facing up, install the snap ring into the compressor cover.

CAUTION ⚠

- **Fit the snap ring into place using hands not to let it spring away.**

◆Work after installation◆

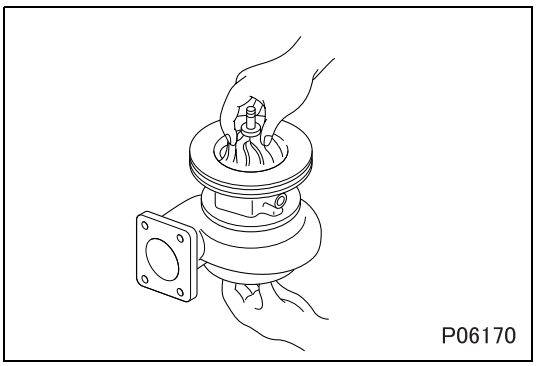

■ **Inspection: Free rotation of cartridge assembly**

- Turn the wheels of the cartridge assembly. They should turn freely without binding.
- If not, disassemble again and correct.

INTERCOOLER

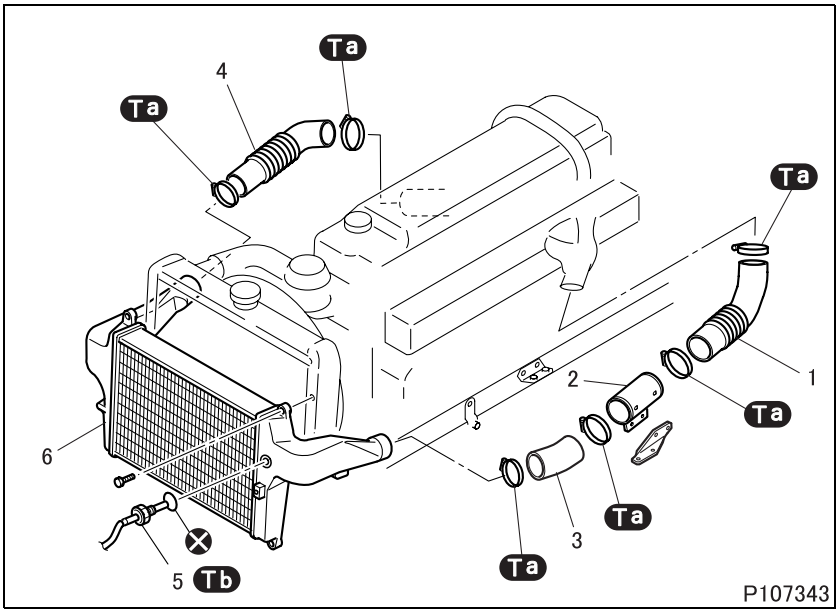

●Removal sequence

1 Air outlet hose
2 Air outlet pipe
3 Air outlet duct
4 Air inlet hose
5 Intake air temperature sensor 1
6 Intercooler

⊗: Non-reusable parts

●Installation sequence

Follow the removal sequence in reverse.

CAUTION ⚠

- **When removing the air inlet hose, do not try to pry it off with strong force using a screwdriver or other similar tools. Doing that can damage the fluorolayer on the inner surface of the hose, possibly compromising the oil resistance of the hose.**

Service standards

Location	Maintenance item	Standard value	Limit	Remedy
6	Intercooler air leakage (at air pressure of 150 kPa {22 psi, 1.5 kgf/cm^2}	0 cm^3 {0 cu.in.}	–	Replace

Tightening torque (Unit: N·m {ft.lbs, kgf·m})

Mark	Parts to be tightened	Tightening torque	Remarks
Ta	Clamp	8 to 9 {5.9 to 6.6, 0.8 to 0.9}	–
Tb	Intake air temperature sensor	19.6 ± 4.9 {14 ± 3.6, 2.0 ± 0.5}	–

◆Inspection procedure◆

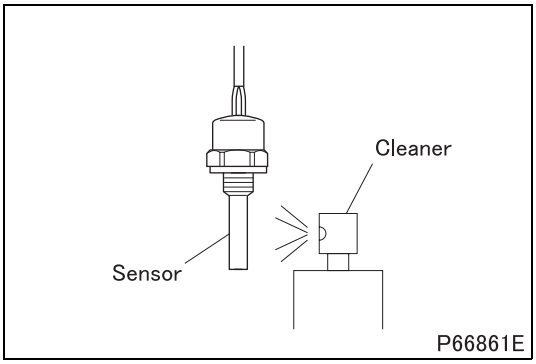

■ Inspection: Intake air temperature sensor 1

- Check that the sensor portion is free of soot, oily substance, etc.
- If not, clean the sensor portion as follows.
- Spray a cleaner on the sensor portion from 2 or 3 cm {0.79 to 1.18 in.} away.

Recommended cleaners:
Nonchlorinated solvent

- In 20 to 30 seconds after spraying, wipe the sensor portion clear of the sprayed cleaner using a soft waste cloth or the like.

CAUTION ⚠

- **Be sure to wait for 20 or 30 seconds before wiping. It takes the cleaner that long to dissolve foreign matter.**

- If the sensor portion is fouled excessively, the positive crankcase ventilation (PCV) may be faulty. Inspect the PCV valve and filter to locate the cause and remove it.

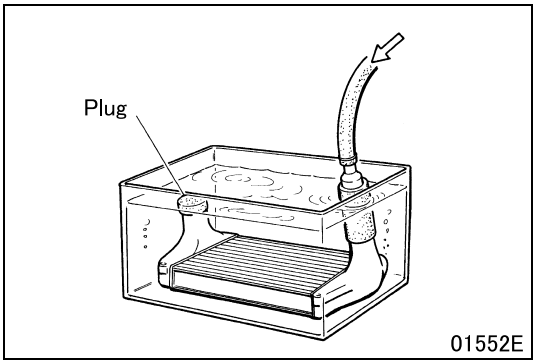

■ **Inspection: Intercooler**

- Plug one of the air ports of the intercooler and immerse it in a tank of water. Apply the specified air pressure to the intercooler through the other air port.
- If leakage is apparent, replace the intercooler.

◆Installation procedure◆

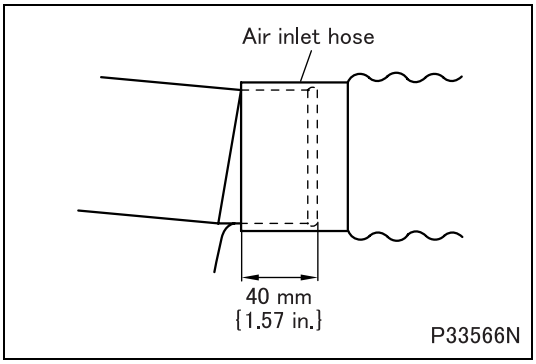

■ **Installation: Air inlet hose**

- Fit each air inlet hose in the direction shown in the illustration.

INTAKE MANIFOLD

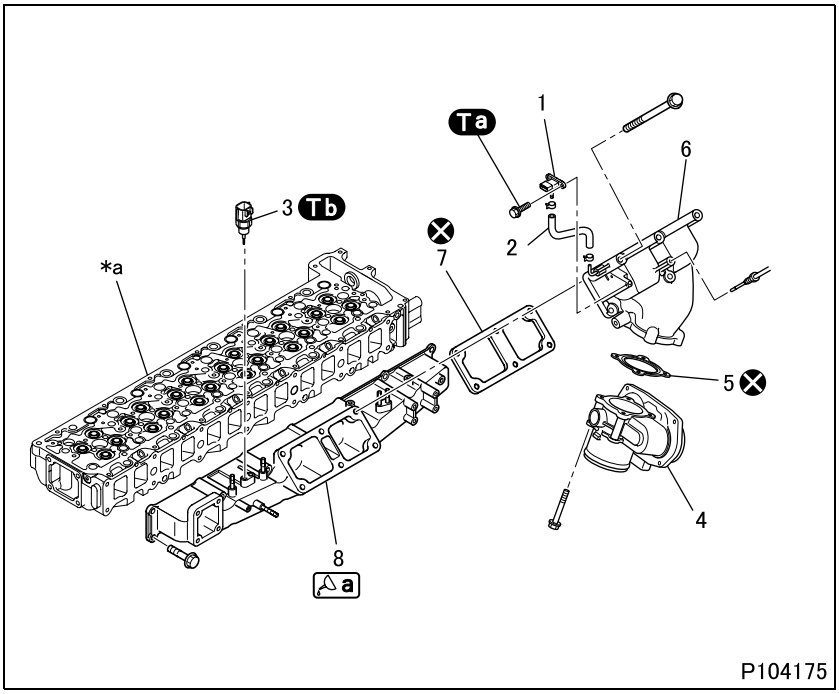

● **Removal sequence**

1 Boost pressure sensor
2 Pressure hose
3 Intake air temperature sensor 2
4 Intake throttle
5 Gasket
6 Intake manifold fitting
7 Gasket
8 Intake manifold

***a**: Cylinder head (See Gr11.)
⊗: Non-reusable parts

● **Installation sequence**

Follow the removal sequence in reverse.

Tightening torque (Unit: N·m {ft.lbs, kgf·m})

Mark	Parts to be tightened	Tightening torque	Remarks
Ta	Bolt (boost pressure sensor mounting)	4 to 6 {3.0 to 4.4, 0.4 to 0.6}	–
Tb	Intake air temperature sensor 2	20 to 30 {15 to 22, 2.1 to 3.1}	–

Lubricant and/or sealant

Mark	Points of application	Specified lubricant and/or sealant	Quantity
a	Cylinder head mounting surface of intake manifold	ThreeBond 1217H	As required

◆Inspection procedure◆

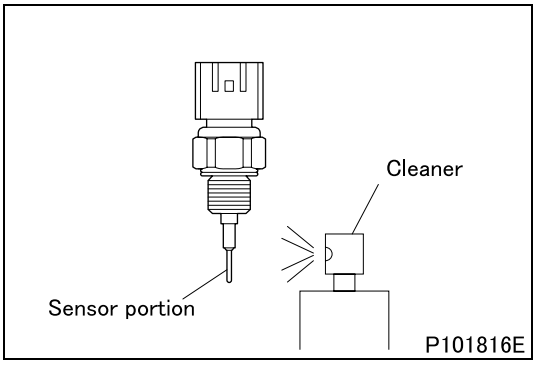

■ **Inspection: Intake air temperature sensor 2**

- Check that the sensor portion is free of soot, oily substance, etc.
- If not, clean the sensor portion as follows.
- Spray a cleaner on the sensor portion from 2 or 3 cm {0.79 to 1.18 in.} away.
  Recommended cleaners:
  Nonchlorinated solvent
- In 20 to 30 seconds after spraying, wipe the sensor portion clear of the sprayed cleaner using a soft waste cloth the like.

CAUTION ⚠

- **Be sure to wait for 20 to 30 seconds before wiping. It takes the cleaner that long to dissolve foreign matter.**

- If the sensor portion is fouled excessively, the positive crankcase ventilation (PCV) may be faulty. Inspect the PCV valve and filter to locate the cause and remove it.

◆Installation procedure◆

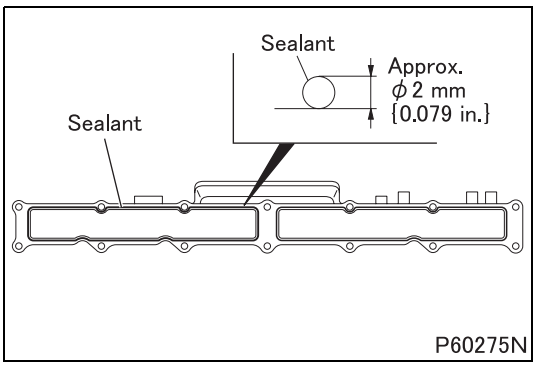

■ **Installation: Intake manifold**

- Clean the sealing surfaces of the intake manifold and cylinder head where they are to be mated with each other.
- Apply an even and continuous bead of sealant onto the intake manifold surface where the cylinder head is to be mounted.
- Install the intake manifold onto the cylinder head within 3 minutes following the application while taking care not to spread the sealant beyond the application area.

CAUTION ⚠

- **Do not start the engine at least for an hour after the intake manifold has been installed.**
- **If the intake manifold mounting bolts are subsequently loosened or removed, be sure to apply sealant again upon reassembly.**

EXHAUST MANIFOLD

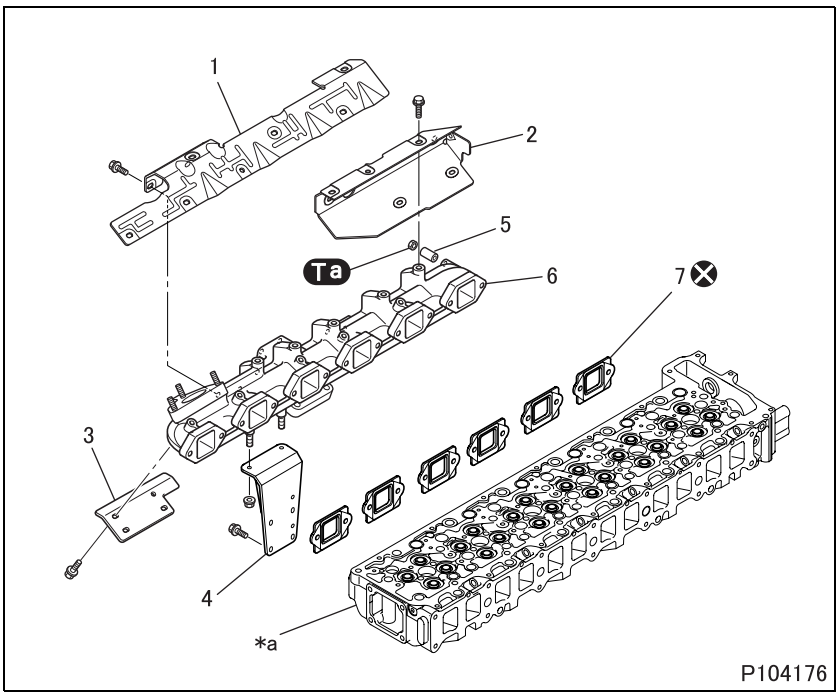

● Removal sequence

1 Exhaust manifold insulator A
2 Exhaust manifold insulator B
3 Front exhaust manifold insulator
4 Exhaust manifold bracket
5 Distance piece
6 Exhaust manifold
7 Gasket

***a**: Cylinder head (See Gr11.)
⊗: Non-reusable parts

● Installation sequence

Follow the removal sequence in reverse.

Tightening torque (Unit: N·m {ft.lbs, kgf·m})

Mark	Parts to be tightened	Tightening torque	Remarks
Ta	Nut (exhaust manifold mounting)	58 {43, 5.9}	–

◆Installation procedure◆

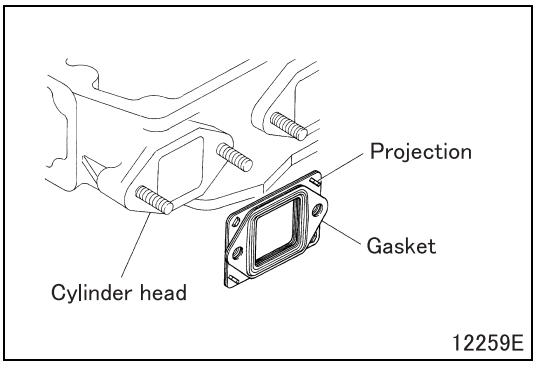

■ Installation: Gasket

- Fit the gasket to the cylinder head in the illustrated direction.

M E M O

EXHAUST PIPE

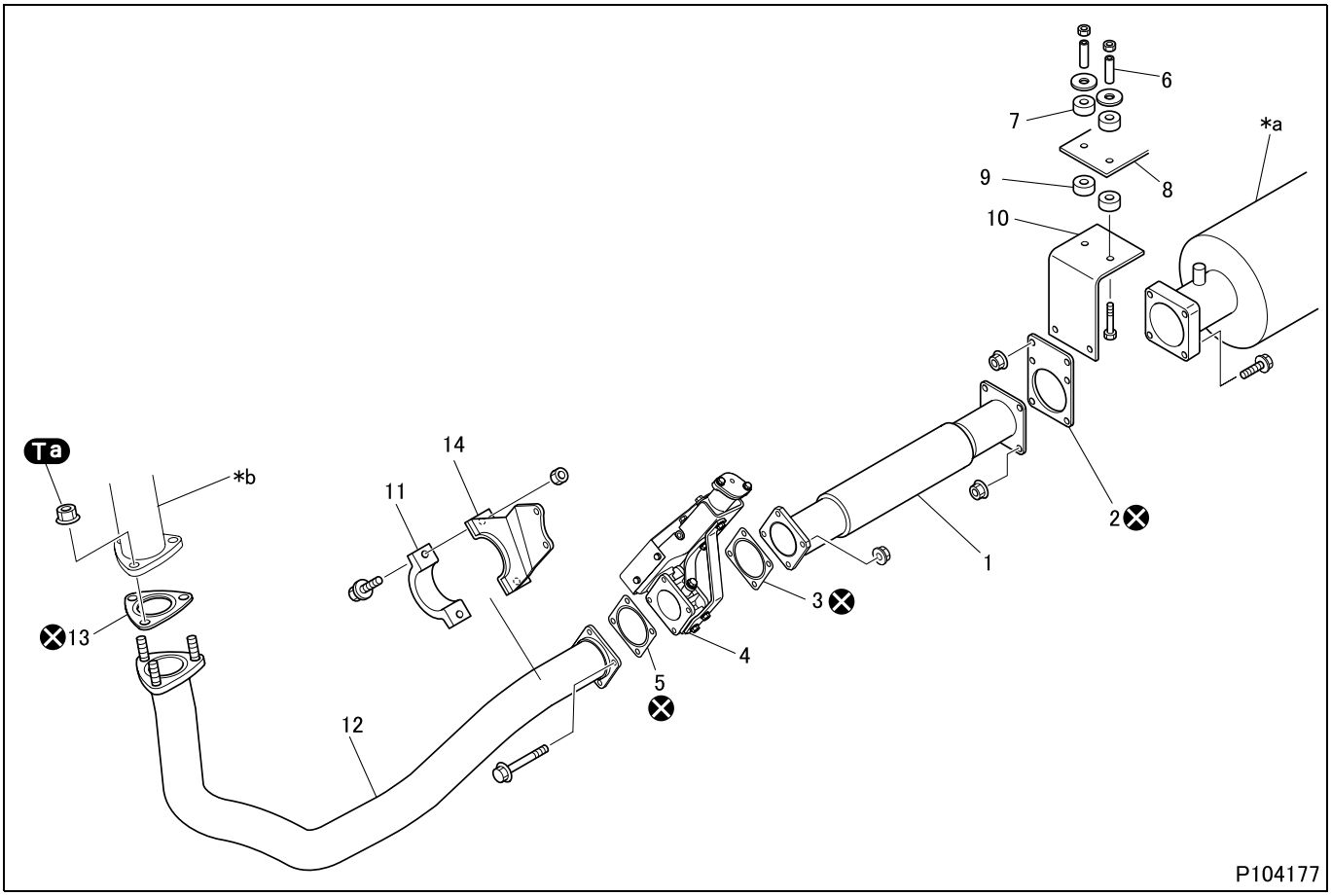

● **Disassembly sequence**

1 Center pipe
2 Gasket
3 Gasket
4 Exhaust shutter (See later section.)
5 Gasket
6 Collar
7 Cushion rubber
8 Bracket
9 Cushion rubber
10 Stay
11 Clamp
12 Front pipe
13 Gasket
14 Bracket

***a**: Exhaust pipe
***b**: Diesel particulate filter
⊗: Non-reusable parts

● **Assembly sequence**

Follow the disassembly sequence in reverse.

Tightening torque (Unit: N·m {ft.lbs, kgf·m})

Mark	Parts to be tightened	Tightening torque	Remarks
Ta	Nut (front pipe mounting)	105 ± 15 {77 ± 11, 11 ± 1.6}	–

M E M O

Exhaust Shutter

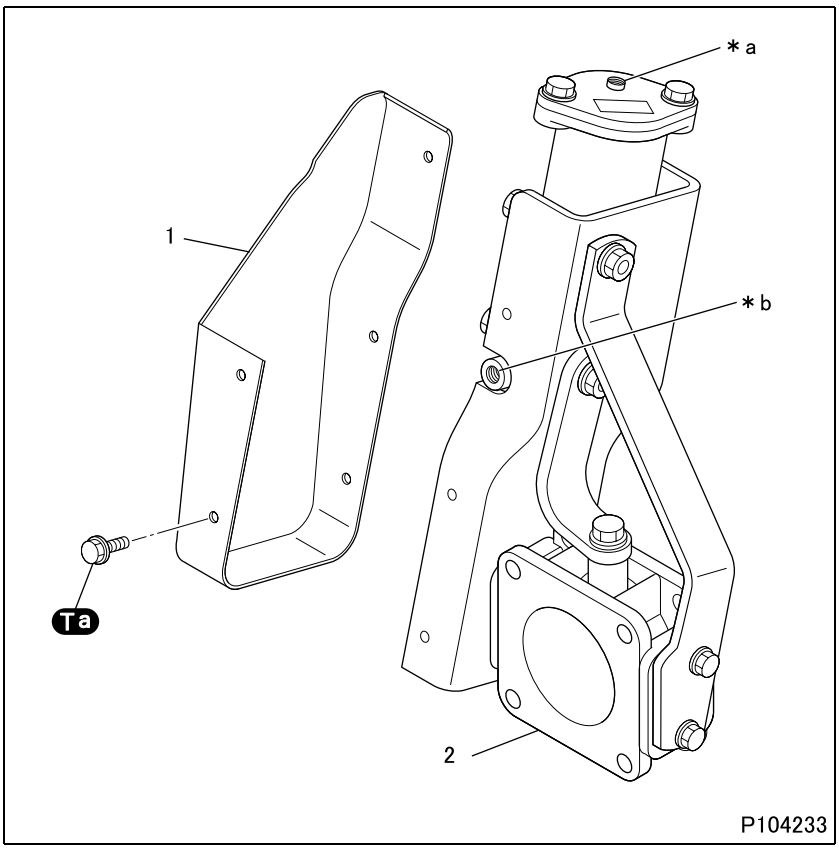

●Disassembly sequence

1 Cover
2 Exhaust shutter

***a**: Port 1
***b**: Port 2

- Exhaust shutter is a disassemblable unit. If there is any abnormality in the control cylinder or elsewhere, replace the exhaust shutter as an assembly.

●Assembly sequence

Follow the disassembly sequence in reverse.

Service standards (Unit: mm {in.})

Location	Maintenance item		Standard value	Limit	Remedy
2	Air leakage from control cylinder (air pressure: 0.64 ± 0.05 MPa {93 ± 7.3 psi, 6.5 ± 0.5 kgf/cm^2})		0 cm^3 {0 cu.in., 0 ml}	–	Replace
	Butterfly valve-to-body minimum clearance (air pressure: 0.64 ± 0.05 MPa {93 ± 7.3 psi, 6.5 ± 0.5 kgf/cm^2})		0.1 or more {0.0039 or more}	–	Replace
	Clearance between butterfly valve and body (average of upper and lower clearances)	When butterfly valve fully closed (air pressure: 0.64 ± 0.05 MPa {93 ± 7.3 psi, 6.5 ± 0.5 kgf/cm^2}	0.2 to 0.4 {0.0079 to 0.016}	–	
		When butterfly valve half closed (air pressure: 0.64 ± 0.05 MPa {93 ± 7.3 psi, 6.5 ± 0.5 kgf/cm^2)	1.5 ± 0.15 {0.059 to 0.0059}	–	

Tightening torque (Unit: N·m {ft.lbs, kgf·m})

Mark	Parts to be tightened	Tightening torque	Remarks
Ta	Bolt (cover mounting)	8.8 to 11.9 {6.5 to 8.8, 0.9 to 1.2}	–

◆Inspection procedure◆

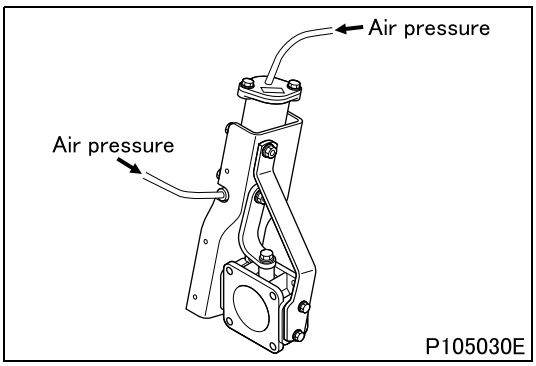

■ Inspection: Air leakage from control cylinder

- Introduce the specified air pressure into the control cylinder and check it for air leaks.
- If there is an air leakage, replace the exhaust shutter valve.

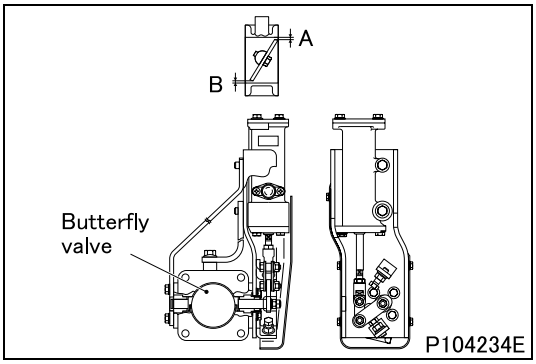

■ Inspection: Butterfly valve-to-body minimum clearance

- Apply a specified level of air pressure to the port 1 of the control cylinder. With the butterfly valve fully closed, measure upper clearance A and lower clearance B between the butterfly valve and body.
- If the measurement deviates from the standard value, replace the exhaust shutter valve.

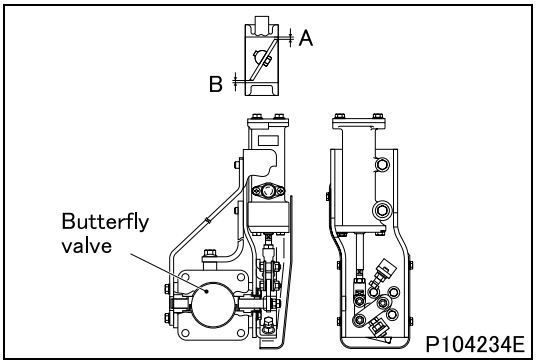

■Inspection: Butterfly valve-to-body clearance (average of upper and lower clearances)

- Perform clearance checks as described below. Replace the exhaust shutter if found defective.

(1) When butterfly valve is fully closed

- Apply a specified level of air pressure to the port 1 of the control cylinder. With the butterfly valve fully closed, measure upper clearance A and lower clearance B between the butterfly valve and body. Average the measured values to obtain the butterfly valve-to-body clearance for service.

$$\text{Average clearance} = \frac{(A + B)}{2}$$

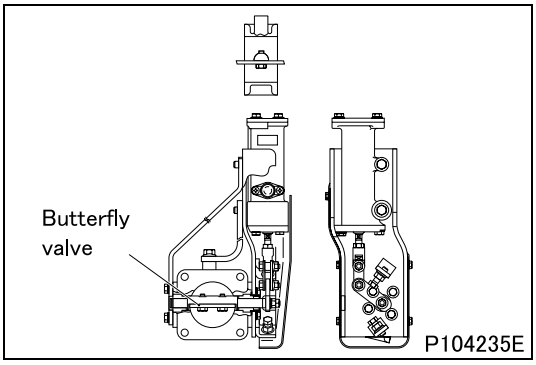

(2) When butterfly valve is fully opened

- Check that the butterfly valve is in its fully open state with no clearance between the lever and adjusting bolt.

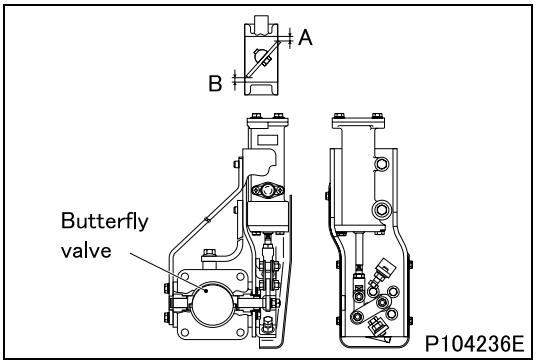

(3) When butterfly valve is half closed

- Apply a specified level of air pressure to the ports 1 and 2 of the control cylinder. With the butterfly valve half closed, measure upper clearance A and lower clearance B between the butterfly valve and body. Average the measured vales to obtain the butterfly valve-to-body clearance for service.

  Average clearance = $\frac{(A + B)}{2}$

CAUTION ⚠

- **When inspecting the butterfly valve, be sure to operate the butterfly valve not from its fully closed state but from its fully open state to half closed state.**

M E M O

DIESEL PARTICULATE FILTER

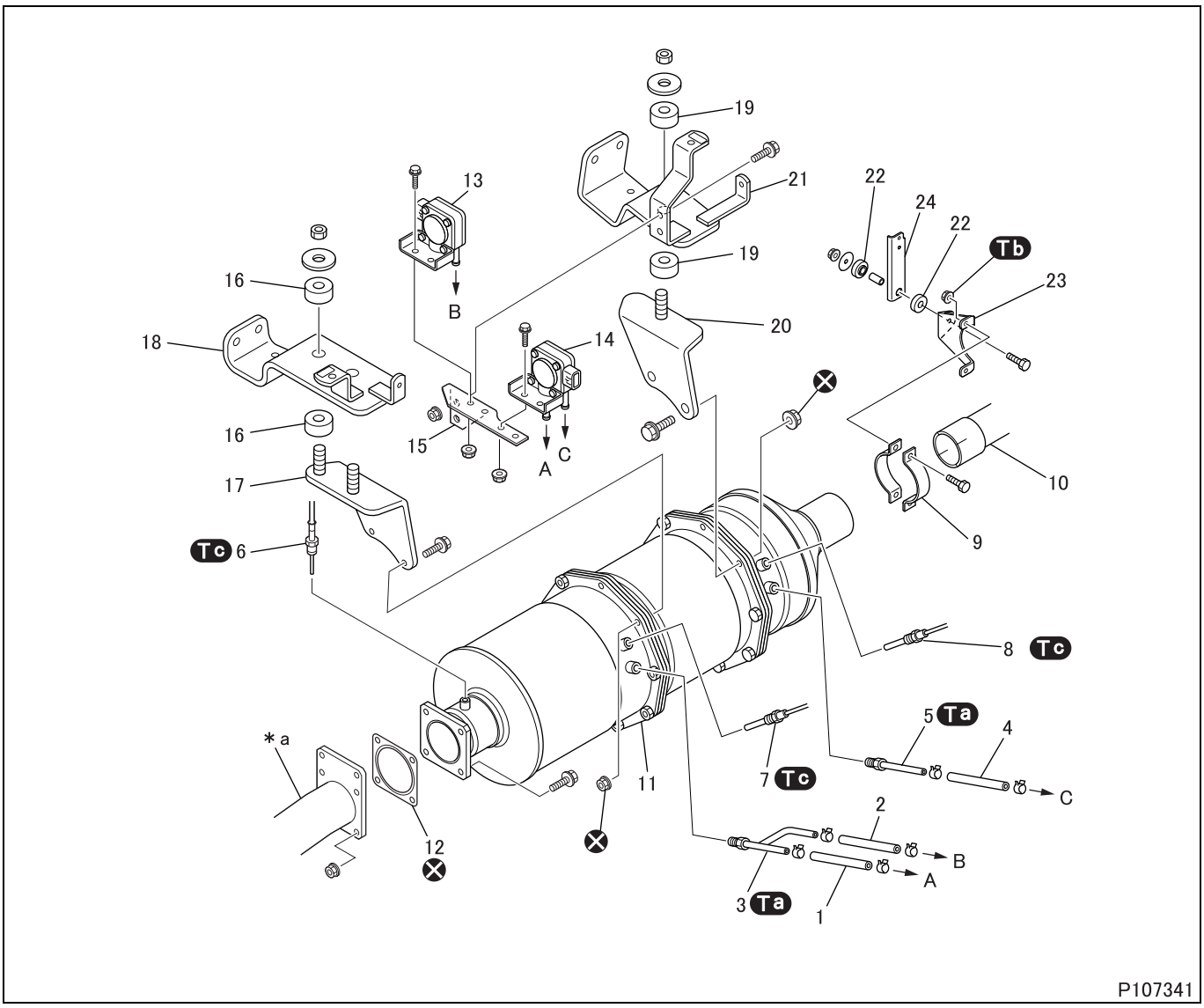

● **Removal sequence**

1 Pressure hose
2 Pressure hose
3 Pressure pipe
4 Pressure hose
5 Pressure pipe
6 Catalytic temperature sensor
7 Exhaust gas temperature sensor 1
8 Exhaust gas temperature sensor 2
9 Clamp
10 Tail pipe
11 DPF (See later section.)
12 Gasket
13 DPF pressure sensor (for absolute pressure detection)
14 DPF pressure sensor (for filter differential pressure detection)
15 Sensor plate
16 Cushion rubber
17 Bracket
18 Bracket
19 Cushion rubber
20 Bracket
21 Bracket
22 Cushion rubber
23 Exhaust pipe stay
24 Exhaust pipe bracket

***a**: Center pipe
⊗: Non-reusable parts
DPF: Diesel particulate filter

● **Installation sequence**

Follow the removal sequence in reverse.

Tightening torque (Unit: N·m {ft.lbs, kgf·m})

Mark	Parts to be tightened	Tightening torque	Remarks
Ta	Pressure pipe	40 ± 6 {30 ± 4.4, 4.1 ± 0.6}	–
Tb	Nut (tail pipe mounting)	20 {15, 2.1}	–
Tc	Catalyst temperature sensor	30 ± 5 {22 ± 3.7, 3.1 ± 0.5}	–
	Exhaust gas temperature sensor 1		
	Exhaust gas temperature sensor 2		

◆Inspection procedure◆

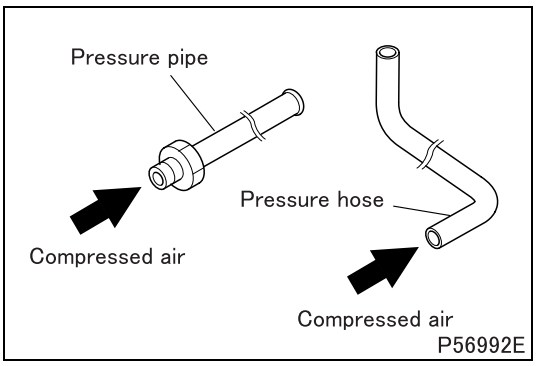

■ Inspection: Pressure pipe and hose

- Check the pressure pipe and hose for clogging by blowing compressed air into the pipe and hose.

CAUTION ⚠

- **Inspection must be performed on an individual pressure pipe or hose.**
- **If compressed air is blown into the pressure pipe or hose with diesel particulate filter pressure sensor still installed, the sensor may become damaged.**

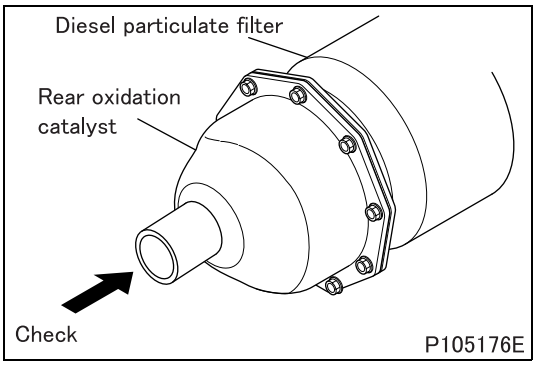

■ Inspection: Diesel particulate filter

- Check the inside of the rear oxidation catalyst and the diesel particulate filter for adhesion of soot.
- If a large amount of soot is adhered, replace the ceramic filter as it may be damaged.

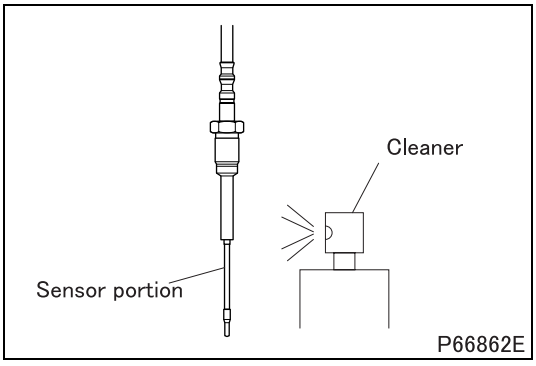

■ Inspection: Temperature sensor

- Check that the sensor portion is free of soot, oily substance, etc.
- If not, clean the sensor portion as follows.
- Spray a cleaner on the sensor portion from 2 or 3 cm {0.79 or 1.18 in.} away.
  Recommended cleaners:
  Nonchlorinated solvent
- In 20 to 30 seconds after spraying, wipe the sensor portion clear of the sprayed cleaner using a soft waste cloth the like.

CAUTION ⚠

- **Be sure to wait for 20 to 30 seconds before wiping. It takes the cleaner that long to dissolve foreign matter.**

◆Installation procedure◆

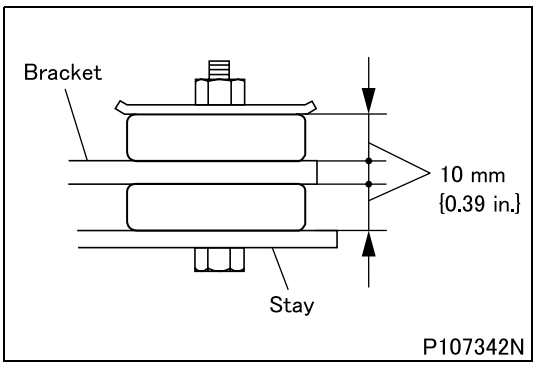

■Installation: Cushion rubber (tail pipe)

- Compress the cushion rubber until the dimensions shown in the illustration are achieved.

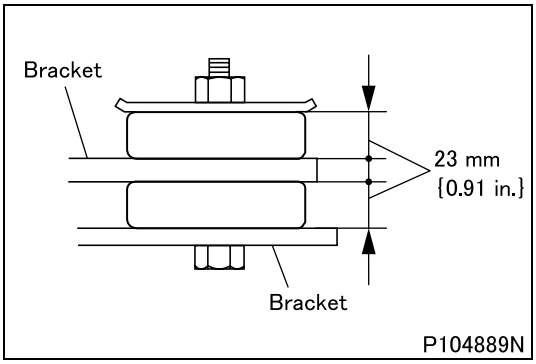

■Installation: Cushion rubber (diesel particulate filter)

- Compress the cushion rubber until the dimensions shown in the illustration are achieved.

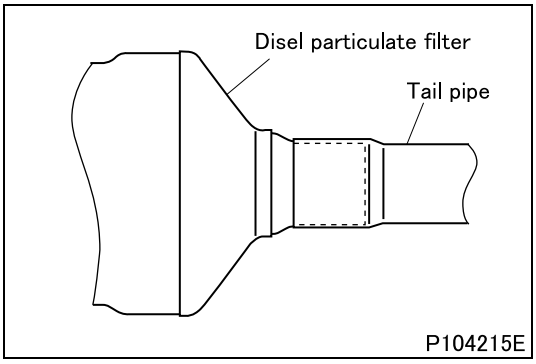

■Installation: Tail pipe

- Insert the tail pipe onto the diesel particulate filter until the larger diameter portion of the pipe contacts the pipe at the rear of the filter.

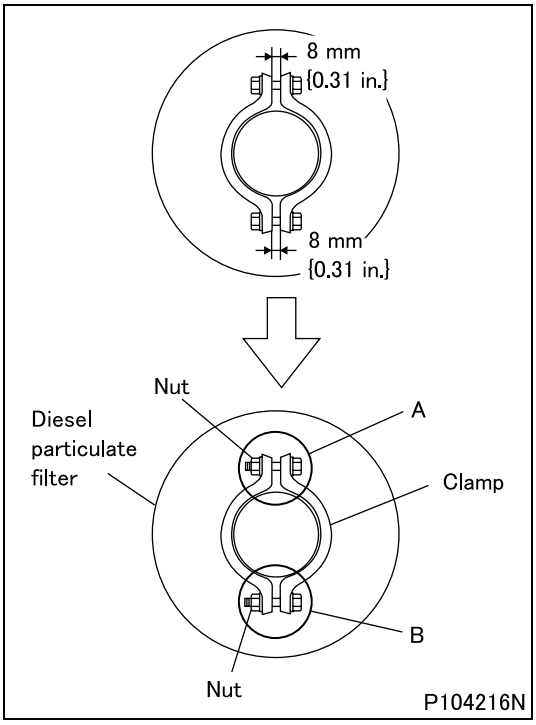

■ **Installation: Clamp**

- Install the clamp and temporarily tighten nuts until the dimensions shown in the illustration are achieved.
- After the tightening, retighten the nut in the section A to the specified torque.
  Then, tighten the nut in the section B to the specified torque.

DIESEL PARTICULATE FILTER

Diesel particulate filter

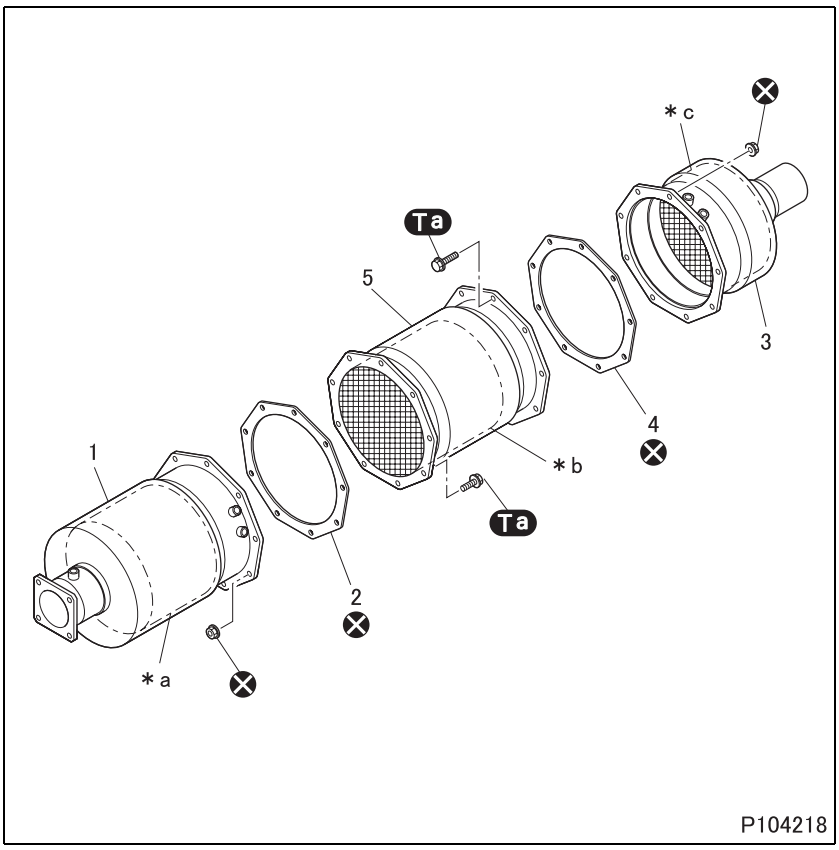

●Disassembly sequence

1 Inlet body
2 Gasket
3 Outlet body
4 Gasket
5 Filter body

***a**: Front oxidation catalyst
***b**: Ceramic filter
***c**: Rear oxidation catalyst
⊗: Non-reusable parts

●Assembly sequence

Follow the disassembly sequence in reverse.

Tightening torque (Unit: N·m {ft.lbs, kgf·m})

Mark	Parts to be tightened	Tightening torque	Remarks
Ta	Bolt (inlet body mounting)	49 to 63.7 {36 to 47, 5.0 to 6.4}	–
	Bolt (outlet body mounting)		

◆Inspection procedure◆

■ Inspection: Inlet body

- Visually inspect the front oxidation catalyst in the inlet body.
- If there is abnormality such as broken part, replace the inlet body as a unit.

■ Inspection: Outlet body

- Visually inspect the rear oxidation catalyst in the outlet body.
- If there is abnormality such as broken part, replace the outlet body as a unit.

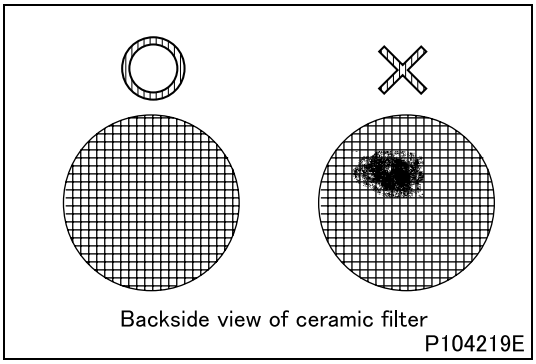
Backside view of ceramic filter
P104219E

■ **Inspection: Filter body**

- Check the ceramic filter for damage while looking into the rear side of the filter body.
- If there is any abnormality, replace the whole filter body.
- If there is not any abnormality such as broken part but the ceramic filter is so dirty that it should be cleaned, clean it. (See “ON-VEHICLE INSPECTION AND ADJUSTMENT”.)

Group 17

Emission Control

Table of Contents

Back

Home

MITSUBISHI FUSO TRUCK OF AMERICA, Inc.

Pub.No.TWME0806-17

INDEX

STRUCTURE AND OPERATION
1. Exhaust Gas Recirculation System 17-2
2. Blowby Gas Return System 17-7

ON-VEHICLE INSPECTION AND ADJUSTMENT
1. Replacement of PCV Valve Element 17-8

EGR VALVE, EGR PIPE AND EGR COOLER 17-10

BLOWBY GAS RETURN SYSTEM 17-12

1. Exhaust Gas Recirculation System

1.1 Overview

- In the exhaust gas recirculation system, the engine electronic control unit controls the exhaust gas recirculation magnetic valve in accordance with information from sensors on various aspects of the engine (engine speed, coolant temperature, throttle opening, etc.).
- Exhaust gas recirculation involves the introduction of inert gases in the post-combustion exhaust emissions into the intake manifold. By reducing the combustion temperature, it reduces the amount of nitrogen oxides (NOx), which are harmful, in the exhaust emissions. Further, an exhaust gas recirculation cooler cools the recirculated exhaust emissions, thereby reducing the peak combustion temperature.

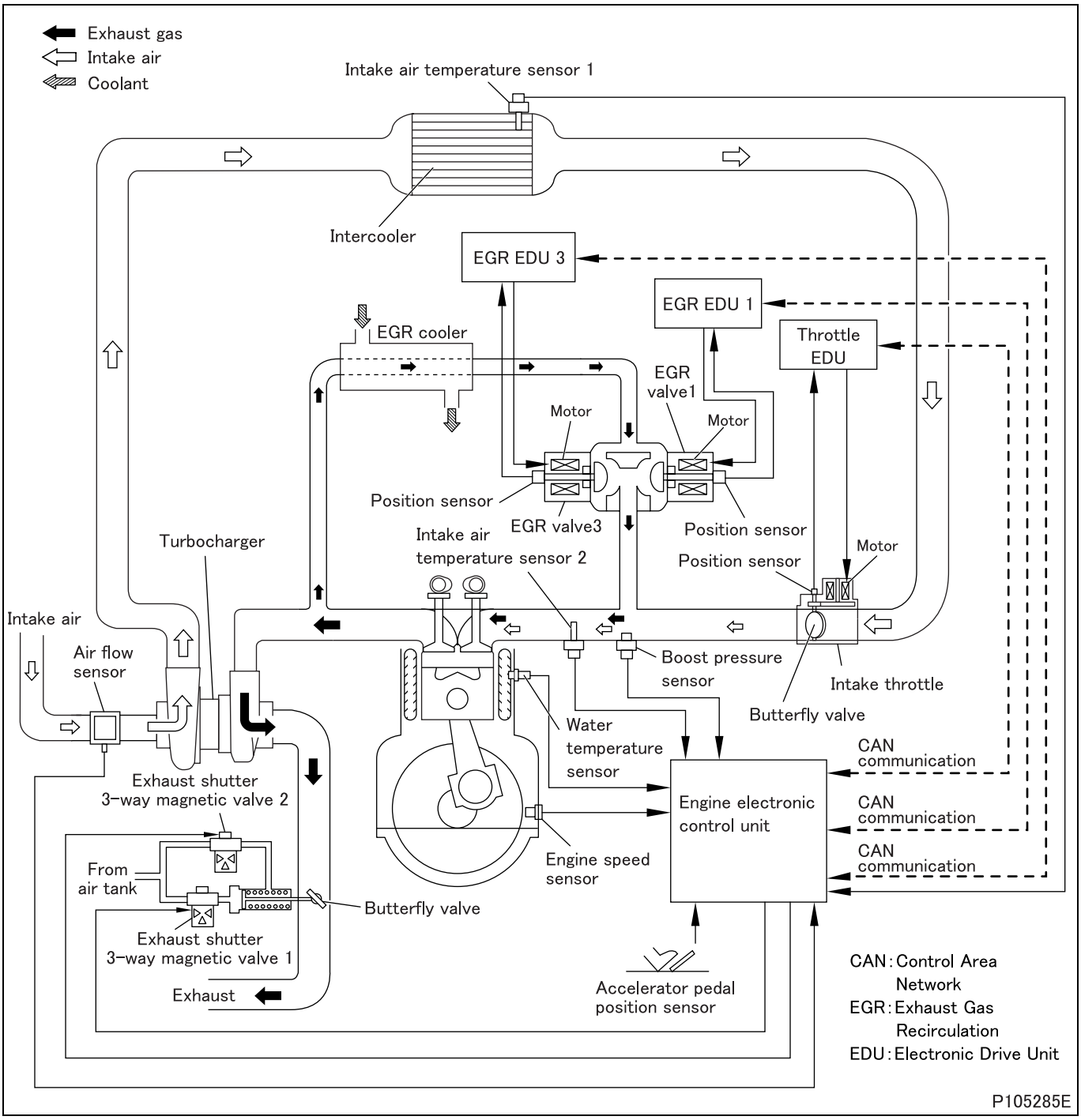

1.2 Electronic control system

(1) System block diagram

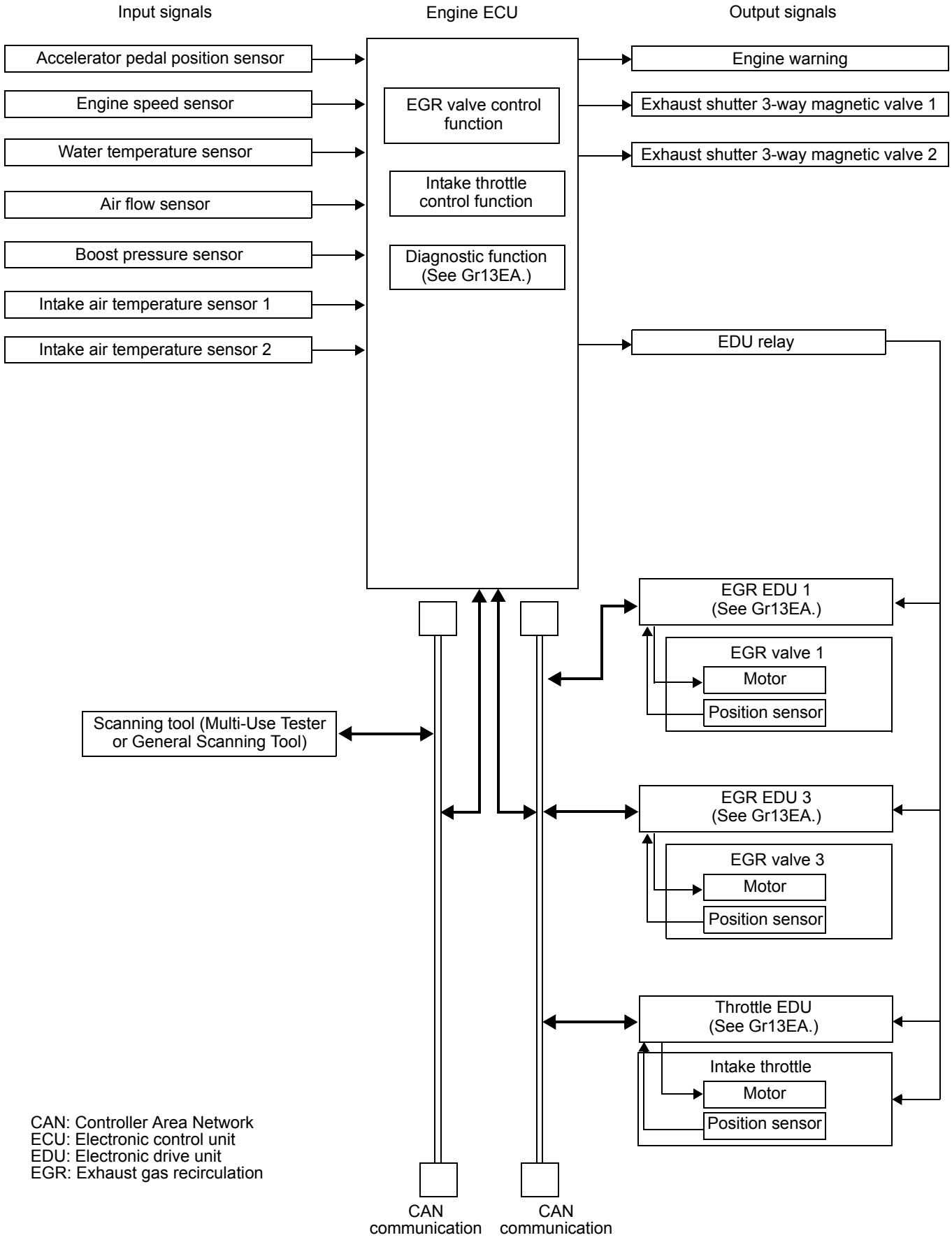

CAN: Controller Area Network
ECU: Electronic control unit
EDU: Electronic drive unit
EGR: Exhaust gas recirculation

(2) Exhaust gas recirculation valve control function

- In accordance with data from sensors, the engine electronic control unit determines the exhaust gas recirculation valve opening that suits the operating condition and sends a control signal (this indicates the target exhaust gas recirculation valve opening) to the exhaust gas recirculation electronic drive unit.
  When necessary to prevent black smoke emissions and engine speed instability (for example, when the engine is heavily loaded, when the engine is lightly loaded, and when the exhaust brake is operating), the engine electronic control unit stops exhaust gas recirculation valve control.
- The exhaust gas recirculation electronic drive unit activates the exhaust gas recirculation valve motor. At the same time, it monitors the extent of valve lift using a position sensor and sends this information (this indicates the actual exhaust gas recirculation valve opening) to the engine electronic control unit.
  This operation makes it possible for the target exhaust gas recirculation valve opening indicated by the engine electronic control unit to be precisely maintained.

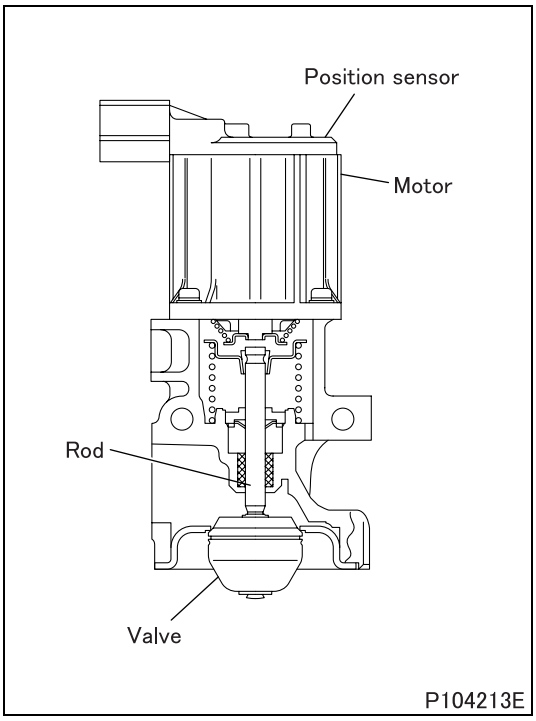

(2.1) Exhaust gas recirculation valve

- A motor in the exhaust gas recirculation valve is driven by control signals from the exhaust gas recirculation electronic drive unit. Via a rod, the motor's operation opens and closes the valve.

(3) Intake throttle control function

- When the engine electronic control unit determines from sensor data on the engine speed and engine loading that the vacuum pressure in the intake manifold is low, it increases the amount of exhaust emissions introduced into the intake manifold by determining an appropriate butterfly valve opening and by sending corresponding control signals (these indicate the target throttle opening) to the throttle electronic drive unit.
- The throttle electronic drive unit activates the valve motor. At the same time, it monitors the valve opening using a position sensor and sends this information (this indicates the actual throttle opening) to the engine electronic control unit.
  This operation makes it possible for the target throttle opening indicated by the engine electronic control unit to be precisely maintained.

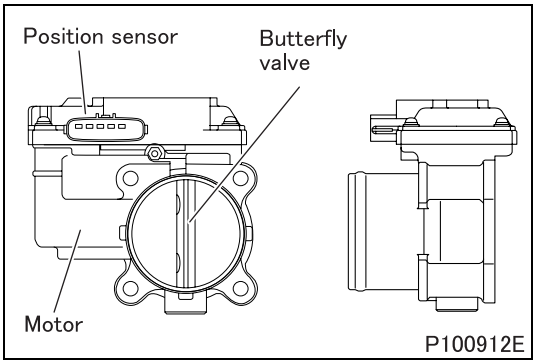

(3.1) Intake throttle

- In accordance with signals from the throttle electronic drive unit, the motor opens and closes the butterfly valve, thereby adjusting the intake air amount such that the effectiveness of exhaust gas recirculation is maximized.

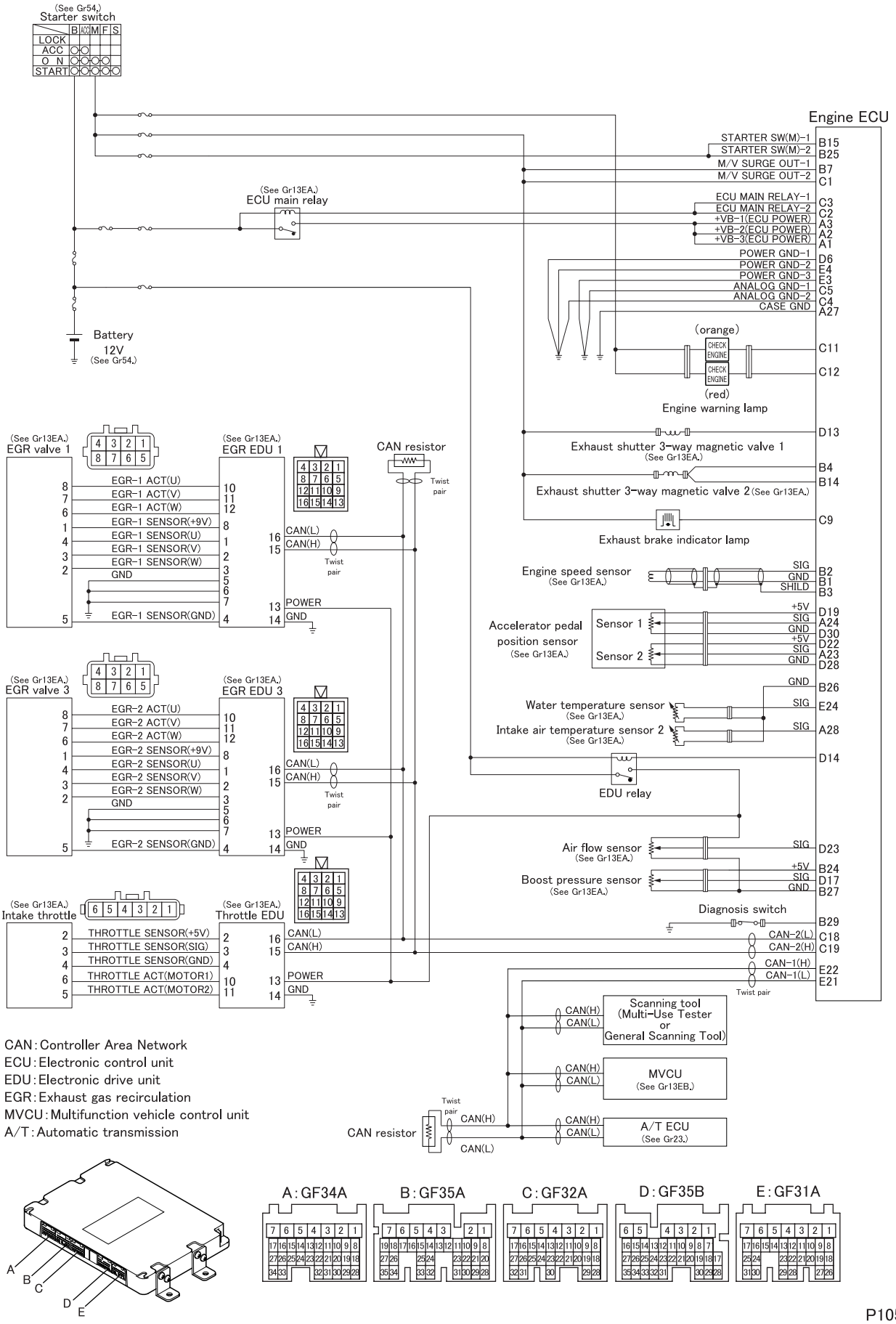

CAN : Controller Area Network
ECU : Electronic control unit
EDU : Electronic drive unit
EGR : Exhaust gas recirculation
MVCU : Multifunction vehicle control unit
A/T : Automatic transmission

P105291E

2. Blowby Gas Return System

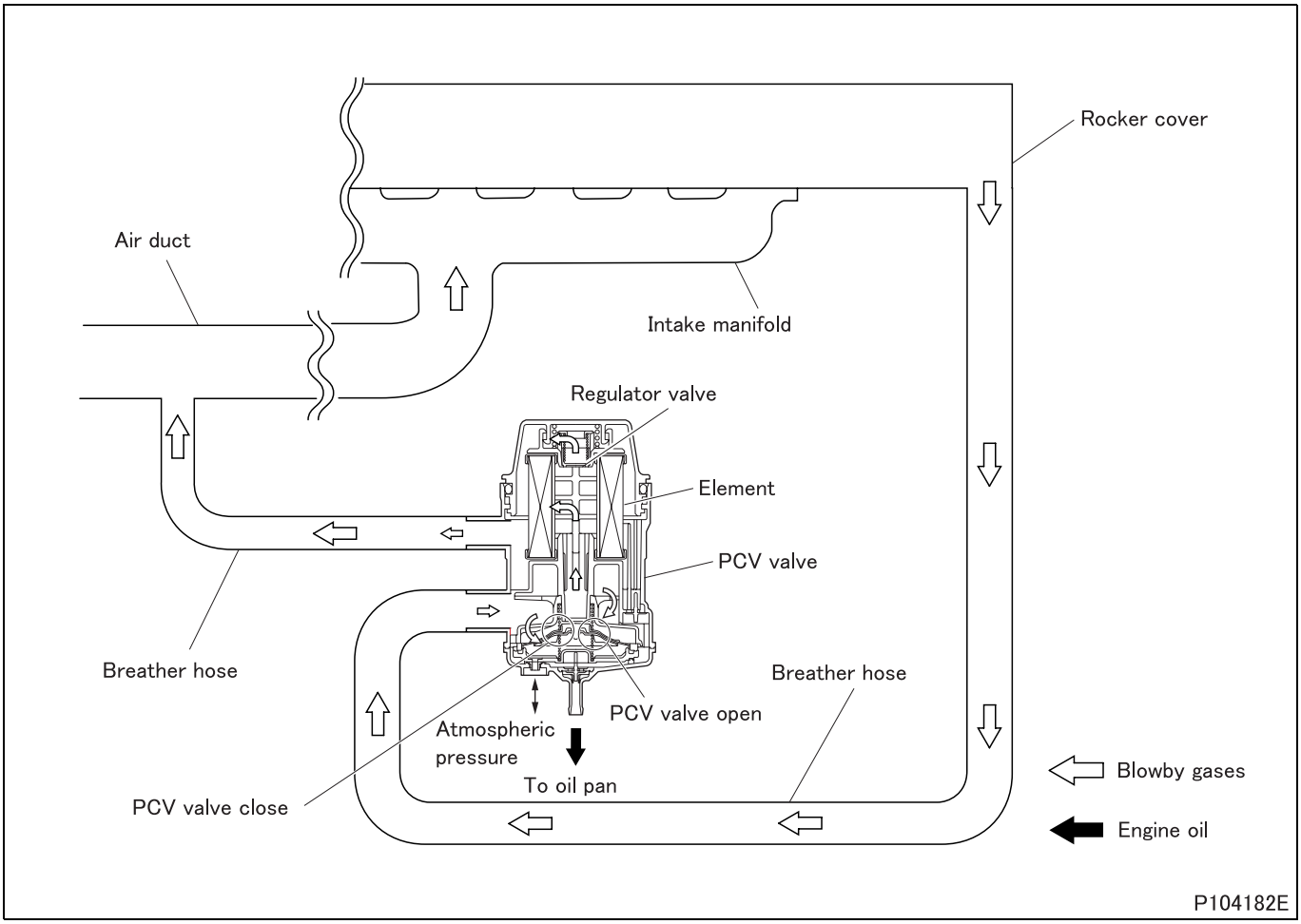

PCV: Positive Crankcase Ventilation

- The blowby gas return system returns blowby gases to an air duct to prevent them from being released to the outside air.
- The PCV valve keeps constant the pressure inside the crankcase.
- The oil in the blowby gas is separated by the wire mesh and the element in the PCV valve and is returned to the oil pan.
- When the element is clogged, the regulator valve opens and the blowby gas is returned to the breather hose.

1. Replacement of PCV Valve Element

Lubricant and/or sealant

Mark	Points of application	Specified lubricant and/or sealant	Quantity
–	O-ring (entire periphery)	Engine oil	As required

CAUTION ⚠

- **For information on the element replacement interval, refer to the element instruction manual. If the element is used beyond its replacement interval, it may become clogged, causing the pressure inside the engine to increase such that oil leakage occurs.**
- **Be sure to remove and install the cap by hand. Using tools could result in damage.**

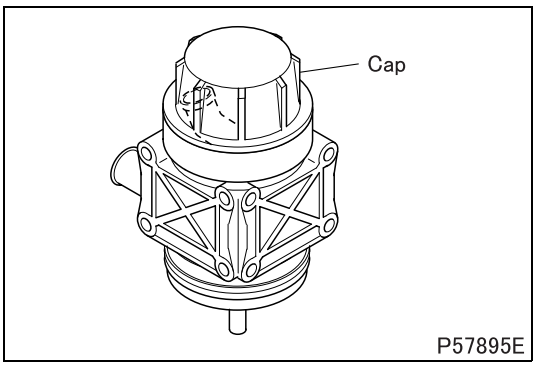

[Removal]

- Loosen the cap by hand.

CAUTION ⚠

- **Do not use any tools to loosen the cap. Otherwise, the cap may become damaged.**

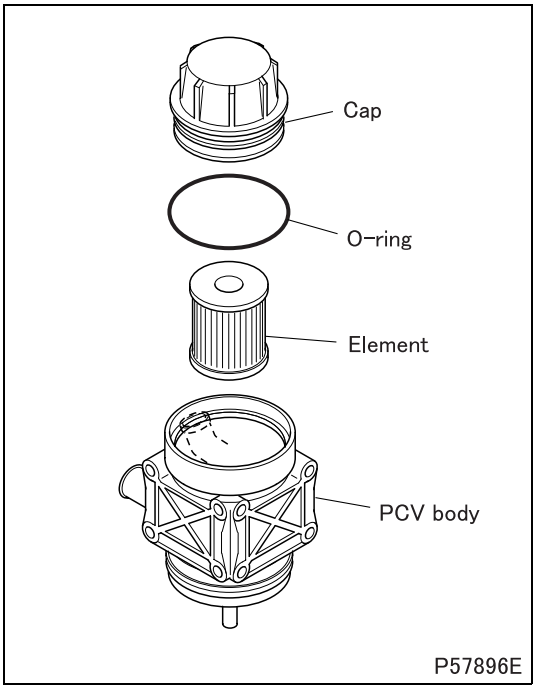

[Installation]

- Clean the thread on the cap.
- Lightly smear the O-ring with engine oil and fit it on the cap.
- Securely tighten the cap until it stops slightly above the PCV body.

CAUTION ⚠

- **Be sure to use a genuine Mitsubishi Fuso element. Using an inappropriate element could result in engine trouble.**
- **When replacing the element, be sure to replace the O-ring also.**

M E M O

EGR VALVE, EGR PIPE AND EGR COOLER

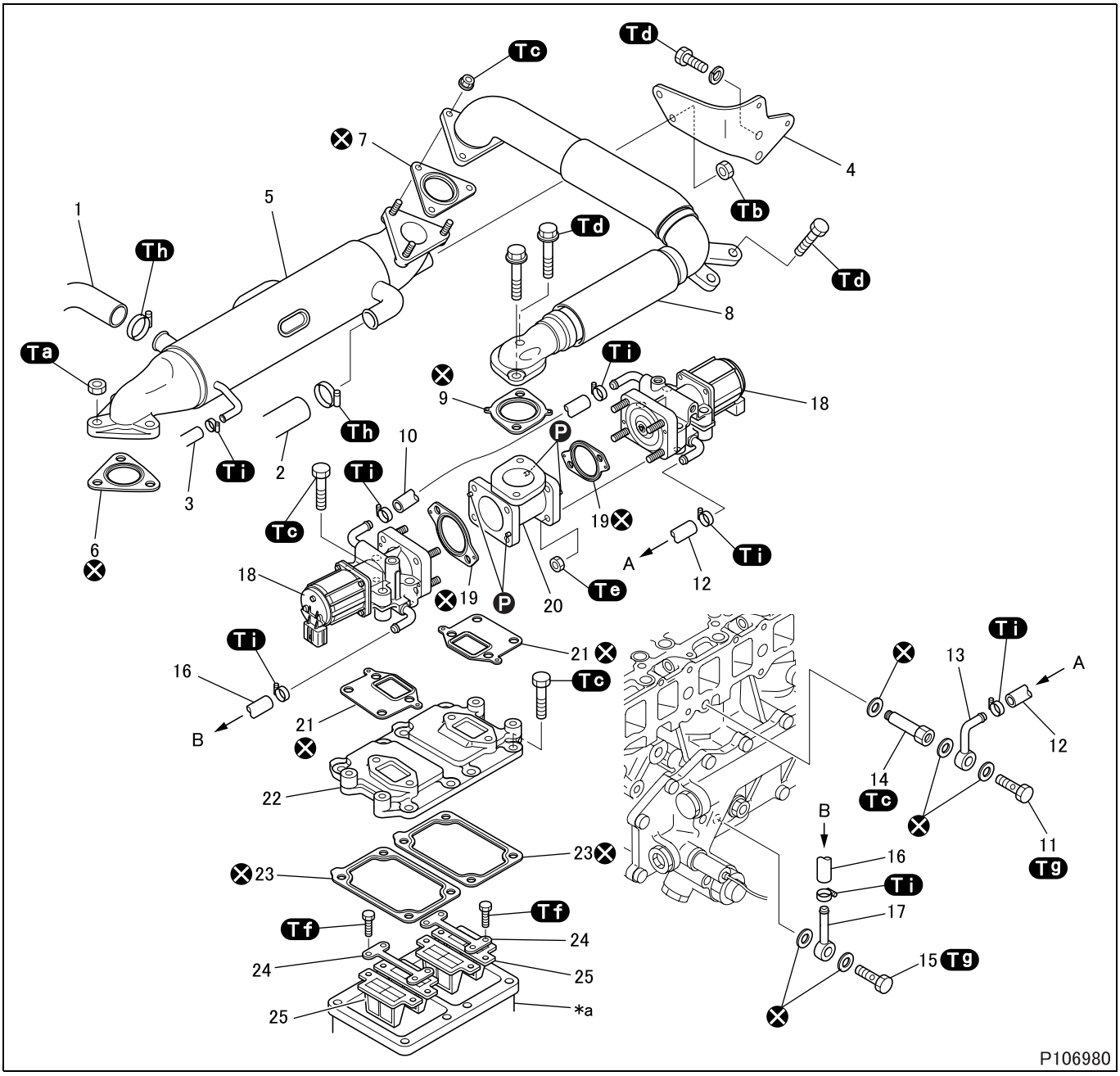

● **Removal sequence**

1 Water hose
2 Water hose
3 Water hose
4 EGR cooler bracket
5 EGR cooler
6 Gasket
7 Gasket
8 EGR pipe
9 Gasket
10 Water hose
11 Eyebolt
12 Water hose
13 EGR valve water inlet pipe
14 Connector
15 Eyebolt
16 Water hose
17 EGR valve water outlet pipe
18 EGR valve
19 Gasket
20 EGR adapter
21 Gasket
22 EGR fitting
23 Gasket
24 Plate
25 Read valve

***a**: Intake manifold fitting (See Gr15.)

Ⓟ: Locating pin
⊗: Non-reusable parts
EGR: Exhaust gas recirculation

Arrows A and B indicate points to or from which pipes are connected.

● Installation sequence

Follow the removal sequence in reverse.

Tightening torque (Unit: N·m {ft.lbs, kgf·m})

Mark	Parts to be tightened	Tightening torque	Remarks
Ta	Nut (exhaust gas recirculation cooler mounting)	58 {43, 5.9}	–
Tb	Nut (exhaust gas recirculation cooler bracket mounting)	24 {18, 2.4}	–
Tc	Nut (exhaust gas recirculation pipe mounting)	50 {37, 5.1}	–
	Bolt (exhaust gas recirculation bolt mounting)		
	Nut (exhaust gas recirculation fitting mounting)		
	Connector		
Td	Bolt (exhaust gas recirculation pipe mounting)	33 {21, 3.4}	–
	Bolt (exhaust gas recirculation cooler bracket mounting)		
Te	Nut (exhaust gas recirculation adapter mounting)	55 {41, 5.6}	–
Tf	Bolt (read valve mounting)	5 {3.7, 0.5}	–
Tg	Eyebolt	39 {29, 4.0}	–
Th	Clamp (water hose mounting)	4 to 4.5 {3.0 to 3.3, 0.4 to 0.5}	–
Ti	Clamp (water hose mounting)	4 {3, 0.4}	–

◆Inspection procedures◆

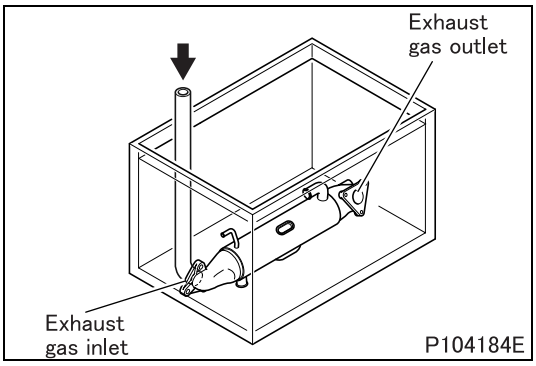

■ Inspection: Exhaust gas recirculation cooler

- Perform the following inspection. If any abnormality is found, replace the exhaust gas recirculation cooler.

(1) Exhaust gas passage side

- Fit a cover over the exhaust gas outlet of the exhaust gas recirculation cooler, and connect a hose to the exhaust gas inlet. Then, submerge the exhaust gas recirculation cooler in a container of water. Make sure the coolant passage is full of water.
- Apply specified air pressure through the hose. Check that air does not leak from any part of the exhaust gas recirculation cooler.

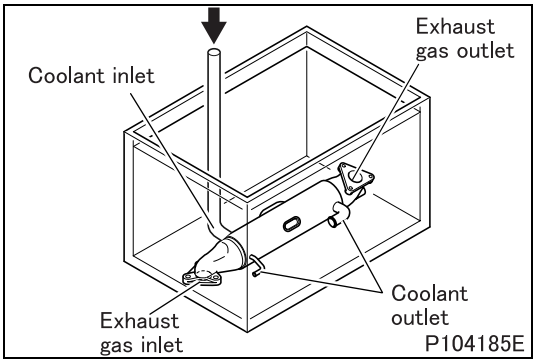

(2) Coolant passage side

- Fit covers over the exhaust gas recirculation cooler's exhaust gas inlet, exhaust gas outlet, and coolant outlet, and connect a hose to the coolant inlet. Then, submerge the exhaust gas recirculation cooler in a container of water.
- Apply air pressure of 300 kPa {44 psi, 3 kgf/cm^2} through the hose. Check that air does not leak from any part of the exhaust gas recirculation cooler.

BLOWBY GAS RETURN SYSTEM

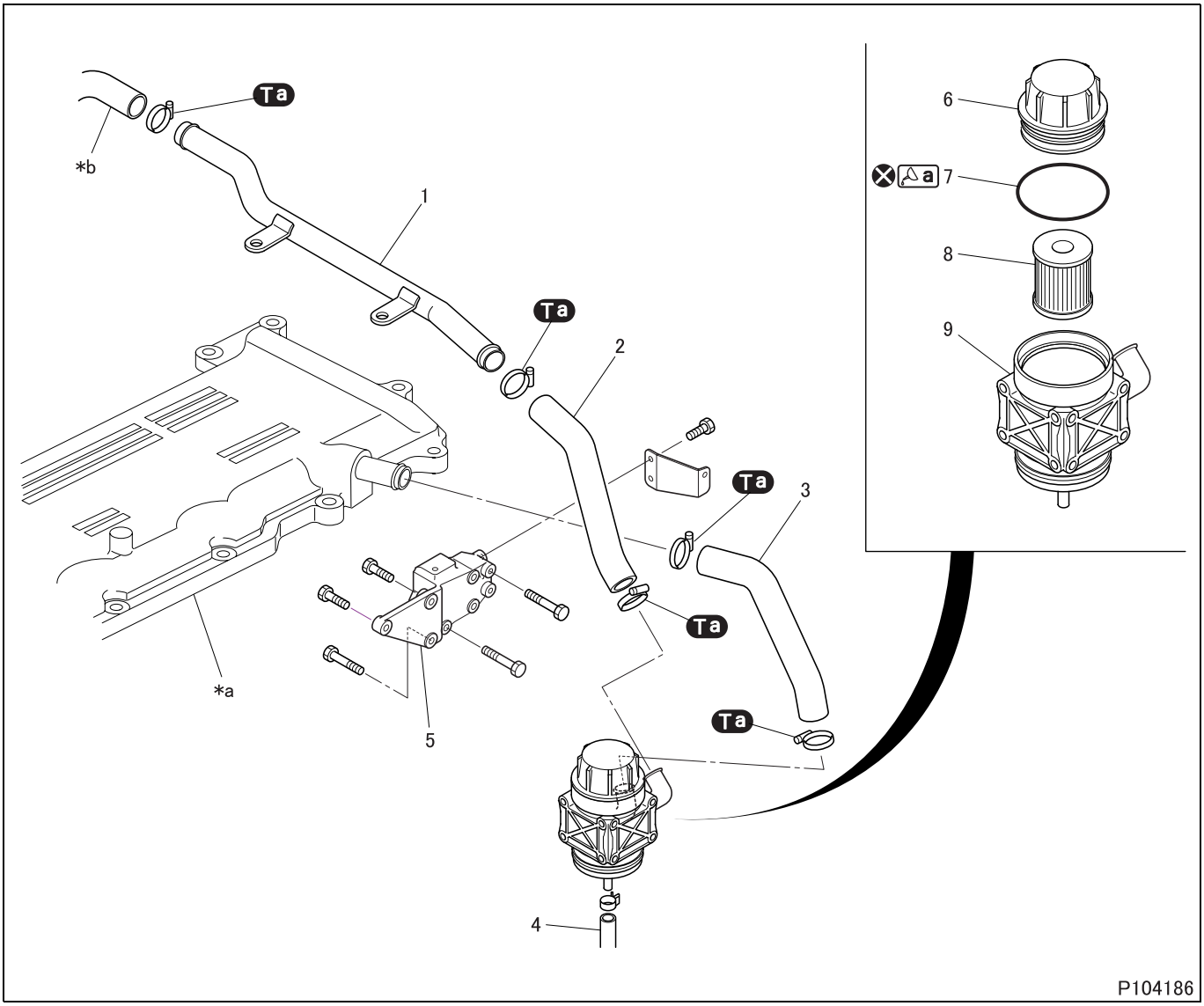

● Removal sequence

1 Breather pipe
2 Breather hose
3 Breather hose
4 Oil hose
5 PCV valve bracket
6 Cap
7 O-ring
8 Element
9 PCV body

***a**: Rocker cover
***b**: Breather hose

⊗: Non-reusable parts
PCV: Positive crankcase ventilation

● Installation sequence

Follow the removal sequence in reverse.

Tightening torque (Unit: N·m {ft.lbs, kgf·m})

Mark	Parts to be tightened	Tightening torque	Remarks
Ta	Clamp	4 to 4.5 {3.0 to 3.3, 0.4 to 0.45}	–

Lubricant and/or sealant

Mark	Points of application	Specified lubricant and/or sealant	Quantity
a	O-ring (entire periphery)	Engine oil	As required

Group 21

Clutch

Table of Contents

Back

Home

MITSUBISHI FUSO TRUCK OF AMERICA, Inc.

Pub.No.TWME0709-21

INDEX

SPECIFICATIONS 21-2

STRUCTURE AND OPERATION

1. **Clutch Control 21-3**
2. **Clutch Master Cylinder 21-4**
3. **Clutch Proper 21-6**

TROUBLESHOOTING 21-8

ON-VEHICLE INSPECTION AND ADJUSTMENT

1. **Replacement of Brake Fluid (Clutch System) 21-10**
2. **Air Bleeding of Brake Fluid (Clutch System) 21-12**
3. **Clutch Pedal Play 21-14**
4. **Clearance Between Clutch Pedal and Floor 21-15**
5. **Clutch Action 21-15**

CLUTCH PEDAL 21-16

CLUTCH MASTER CYLINDER 21-20

CLUTCH POWER CYLINDER 21-22

CLUTCH PROPER 21-24

CLUTCH CONTROL 21-36

SPECIFICATIONS

Item		Specifications
Clutch model	Type	C7M38
Drive type		Strap drive
Clutch disc	Type	Dry, single plate type
Pressure plate	Type	Coil spring type
Control system		Hydraulic pressure type
Clutch master cylinder	Manufacturer	NABCO
Clutch power cylinder	Manufacturer	NABCO

1. Clutch Control

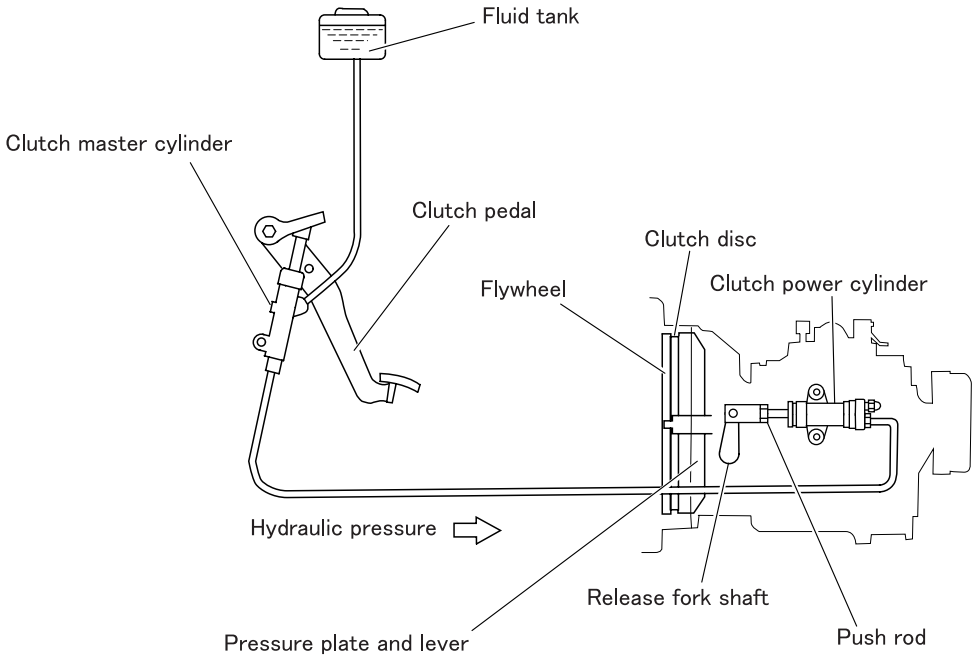

- Hydraulic pressure is used to control the clutch operation.
- When the clutch pedal is pressed, a force is applied to the clutch master cylinder, pushing the push rod in the clutch master cylinder. As a result, hydraulic pressure is generated, activating the clutch power cylinder or the clutch booster and disengaging the clutch.

2. Clutch Master Cylinder

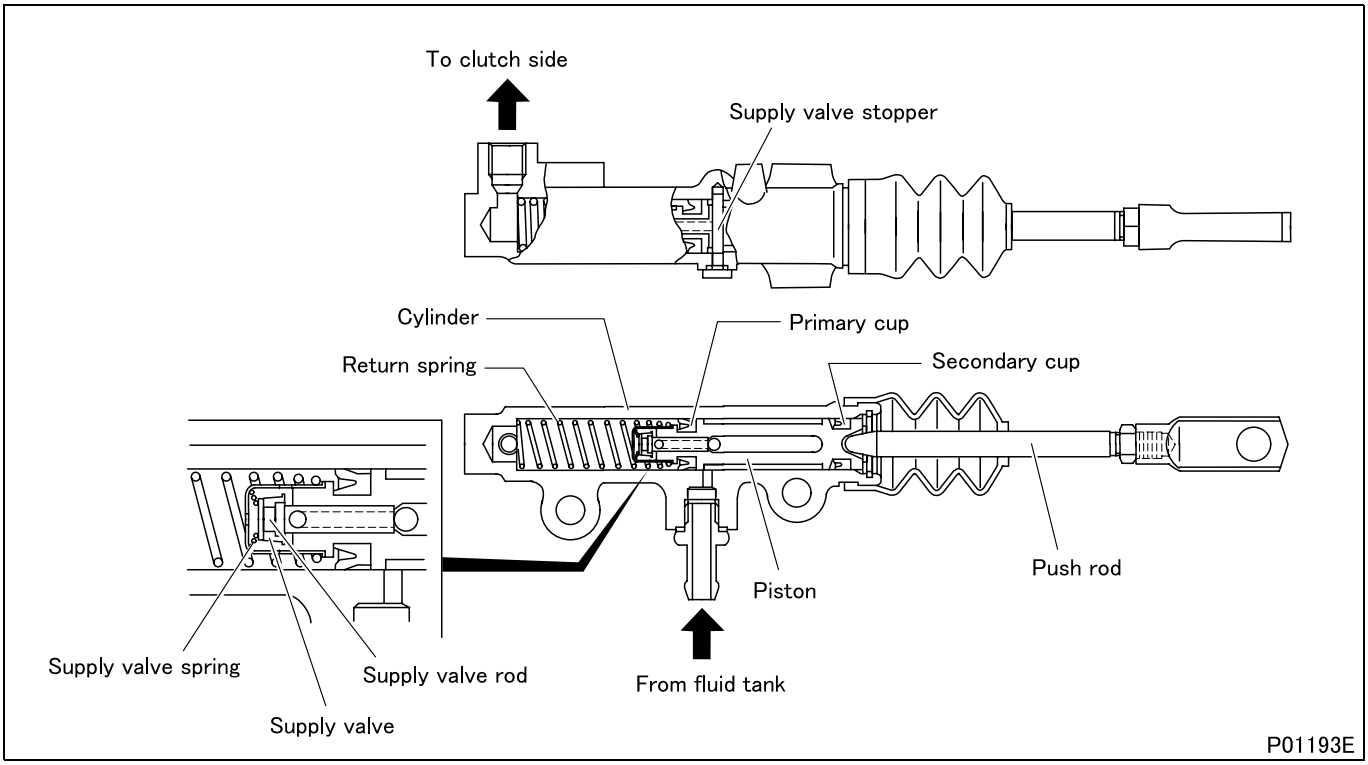

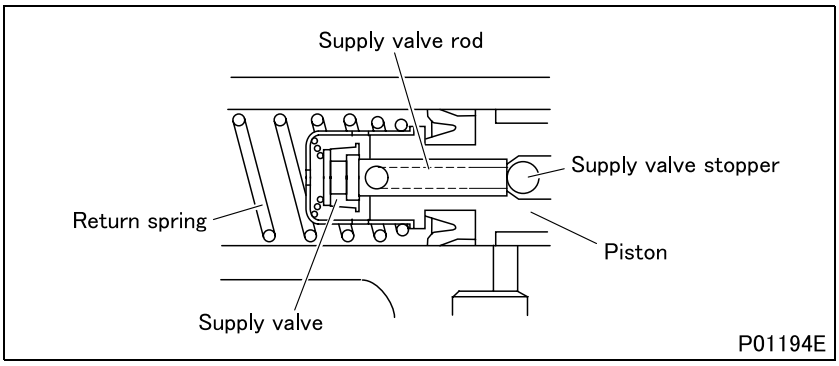

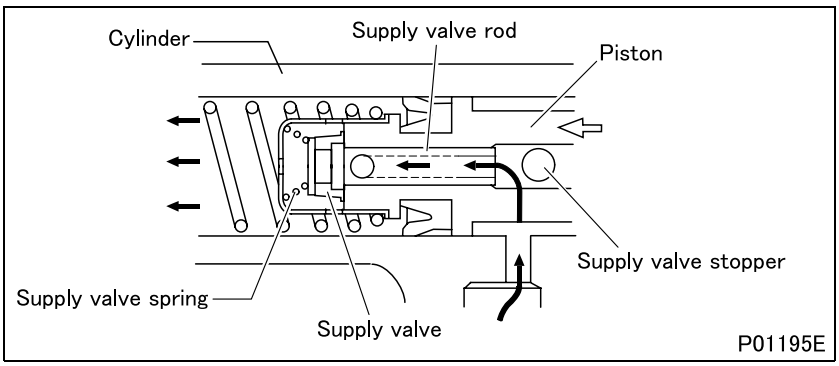

2.1 Before clutch pedal is pressed

- Because the piston is pushed against the push rod by the return spring, the supply valve rod contacts the supply valve stopper, leaving the supply valve open.
- As a result, the fluid passage on the fluid tank side is connected to the fluid passage on the clutch side.

2.2 When clutch pedal is pressed

- When the push rod pushes the piston, the supply valve rod leaves the supply valve stopper, and at the same time, the spring force of the supply valve spring closes the supply valve.
- When the piston is further pushed, the hydraulic pressure is generated in the cylinder, which activates the clutch booster or clutch power cylinder.
- As a result, the fluid is supplied by the movement amount of the piston.

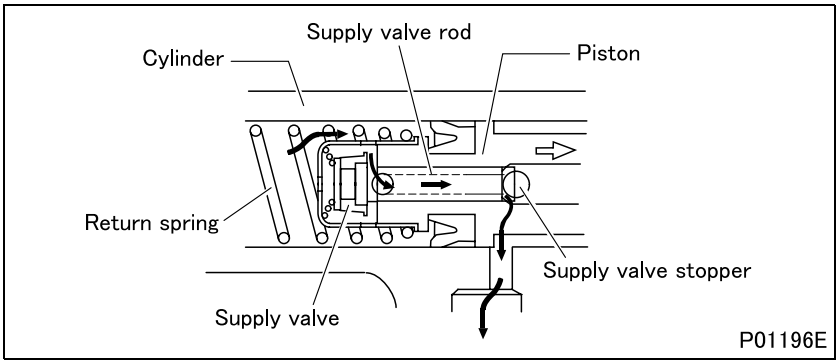

2.3 When clutch pedal is released

- When the piston is pushed back by the hydraulic pressure in the cylinder and the return spring, the supply valve rod contacts the stopper, opening the supply valve.
- As a result, the fluid on the clutch side returns to the fluid tank, and hydraulic pressure is lost.

3. Clutch Proper

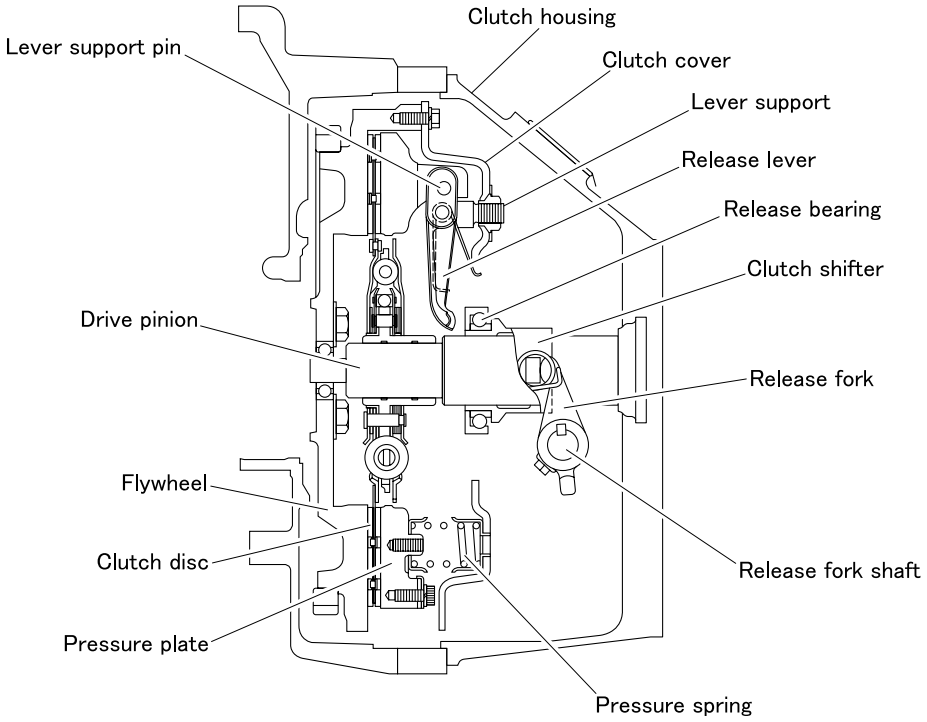

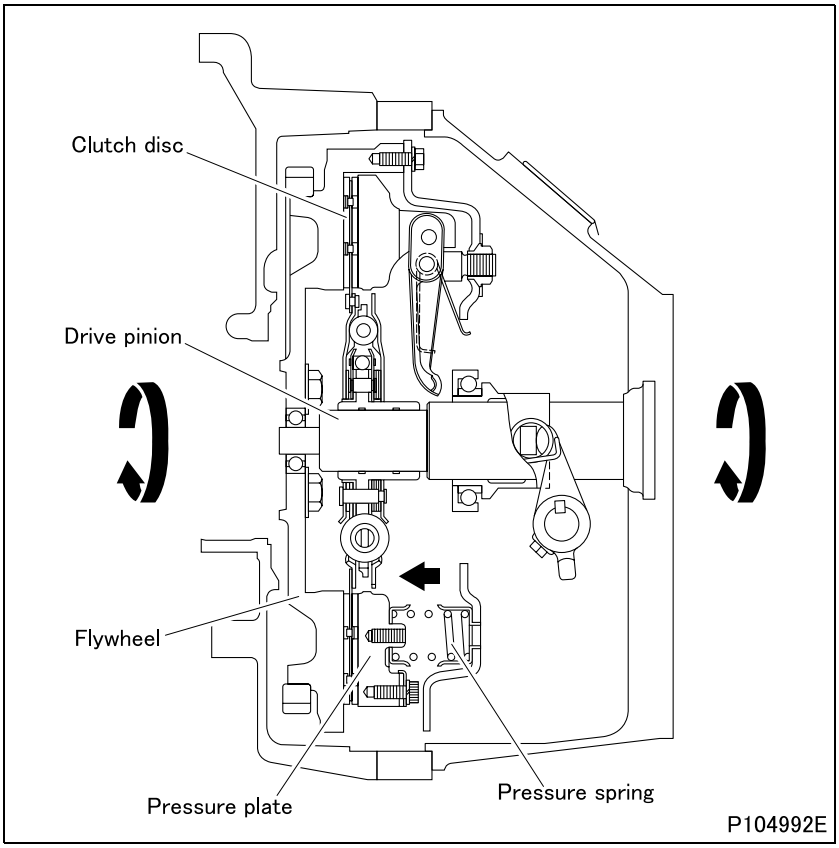

3.1 When clutch pedal is released

- The force of the pressure spring acts on the pressure plate, which in turn keeps the clutch disc pressed against the flywheel.
- Pressed against the flywheel, the clutch disc rotates together with the flywheel and transmits the engine power to the transmission drive pinion.

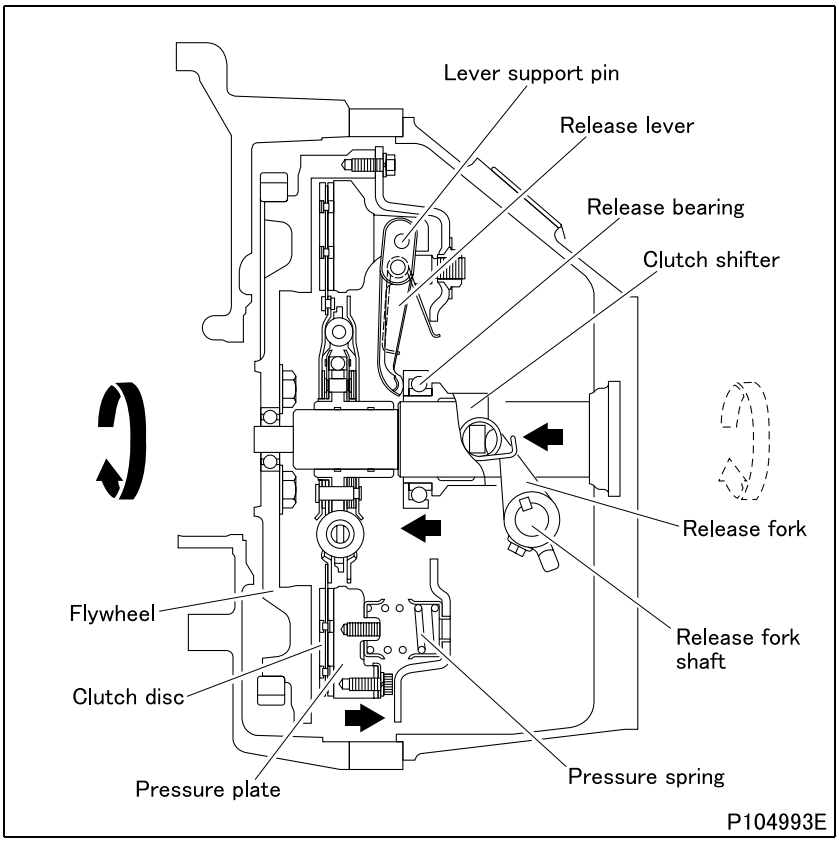

3.2 When clutch pedal is pressed

- The hydraulic pressure from the clutch master cylinder activates the clutch booster or clutch power cylinder. As a result, the release fork shaft activates the release fork, pushing out the clutch shifter as well as the release bearing, which then pushes the release lever.
- The release lever compresses the pressure spring with the lever support pin as the fulcrum and pull back the pressure plate coupled to the clutch cover. As a result, clearance is created between the clutch disc and flywheel, and the engine power is not transmitted to the transmission.

Possible causes / Symptoms		Clutch disengaged but drags	Clutch slips	Clutch does not engage smoothly	Clutch makes noise on disengagement	Clutch makes noise on engagement	Judder when vehicle starting	Clutch pedal requires too much effort	Reference Gr
Pressure plate and lever	Release lever heights uneven	O		O			O		
	Pressure spring fatigued		O	O					
	Pressure plate warped or faulty	O	O	O			O		
	Loose strap bolts	O		O			O		
	Strap plate bent	O		O	O		O		
Clutch disc	Disc deformed	O		O			O		
	Disc rivets loose			O			O		
	Disc torsion spring fatigued or damaged					O			
	Spline worn	O		O			O		
	Spline rusted	O		O			O		
	Facing worn		O						
	Facing surface hardened		O	O			O		
	Facing oily or greasing		O	O					
Clutch pedal	Pedal free play insufficient		O						
	Pedal free play excessive	O							
	Pedal stroke insufficient	O							
	Return spring fatigued		O						
	Pedal sliding part faulty			O			O	O	
Clutch power cylinder	Piston and piston cup sliding movement faulty	O	O	O					
	Return spring fatigued	O	O	O					
	Brake fluid passage port clogged	O	O	O					
Clutch master cylinder	Piston and piston cup sliding movement faulty	O	O	O				O	
	Spring fatigued		O						
	Brake fluid passage port clogged	O	O	O				O	
Clutch housing	Release bearing faulty	O	O	O	O				
	Clutch shifter sliding movement faulty	O	O	O					
	Clutch shifter lubrication insufficient	O	O	O					
	Clutch release fork deformed						O		

Symptoms / Possible causes	Clutch disengaged but drags	Clutch slips	Clutch does not engage smoothly	Clutch makes noise on disengagement	Clutch makes noise on engagement	Judder when vehicle starting	Clutch pedal requires too much effort	Reference Gr
Transmission drive pinion spline worn	O		O					Gr22
Engine mounting fatigued						O		Gr11
Flywheel warped, deformed or worn forming steps	O	O	O			O		
Flywheel pilot bearing faulty	O							
Air mixed in clutch hydraulic (brake fluid) system	O							
Clutch hydraulic (brake fluid) system leaking	O							

ON-VEHICLE INSPECTION AND ADJUSTMENT

1. Replacement of Brake Fluid (Clutch System)

Tightening torque (Unit: N·m {ft.lbs, kgf·m})

Mark	Parts to be tightened	Tightening torque	Remarks
–	Air bleeder	25 to 34 {18 to 25, 2.5 to 3.5}	–

Lubricant and/or sealant

Mark	Points of application	Specified lubricant and/or sealant	Quantity
–	Clutch fluid tank	Brake fluid (SAE J1703 or FMVSS No.116 DOT3)	As required

CAUTION ⚠

- **Brake fluid is corrosive on paintwork. Be careful not to spill it onto the paintwork.**
- **If brake fluid is spilled onto the paintwork, immediately wipe it off.**
- **Be sure to use new Brake Fluid (SAE J1703 or FMVSS No.116 DOT3). Do not mix it with brake fluid of different properties or mineral oil (gas oil, engine oil, gear oil, automatic transmission fluid, etc.). This will alter the original properties of FUSO Brake Fluid, causing the boiling point to drop as well as the clutch rubber parts to swell. Faulty operation of the clutch will result.**
- **Ensure that no foreign matter or water enter into the brake fluid when refilling it, as they will cause faulty clutch operation.**
- **Use a mug exclusively kept for the specified brake fluid. This ensures that no brake fluid of different properties or mineral oil enter into the system.**

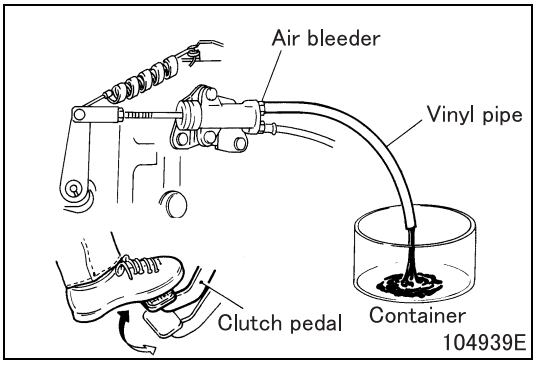

1.1 Work before replacement

- Install one end of a vinyl pipe onto the air bleeder of the clutch booster or clutch power cylinder. Place the loose end into a container.

1.2 Replacement of brake fluid

- Replace the brake fluid in the following sequence.

CAUTION ⚠

- **Replacement of old brake fluid with new brake fluid in the clutch fluid line can be recognized by a change in color of the brake fluid being discharged through the vinyl pipe.**

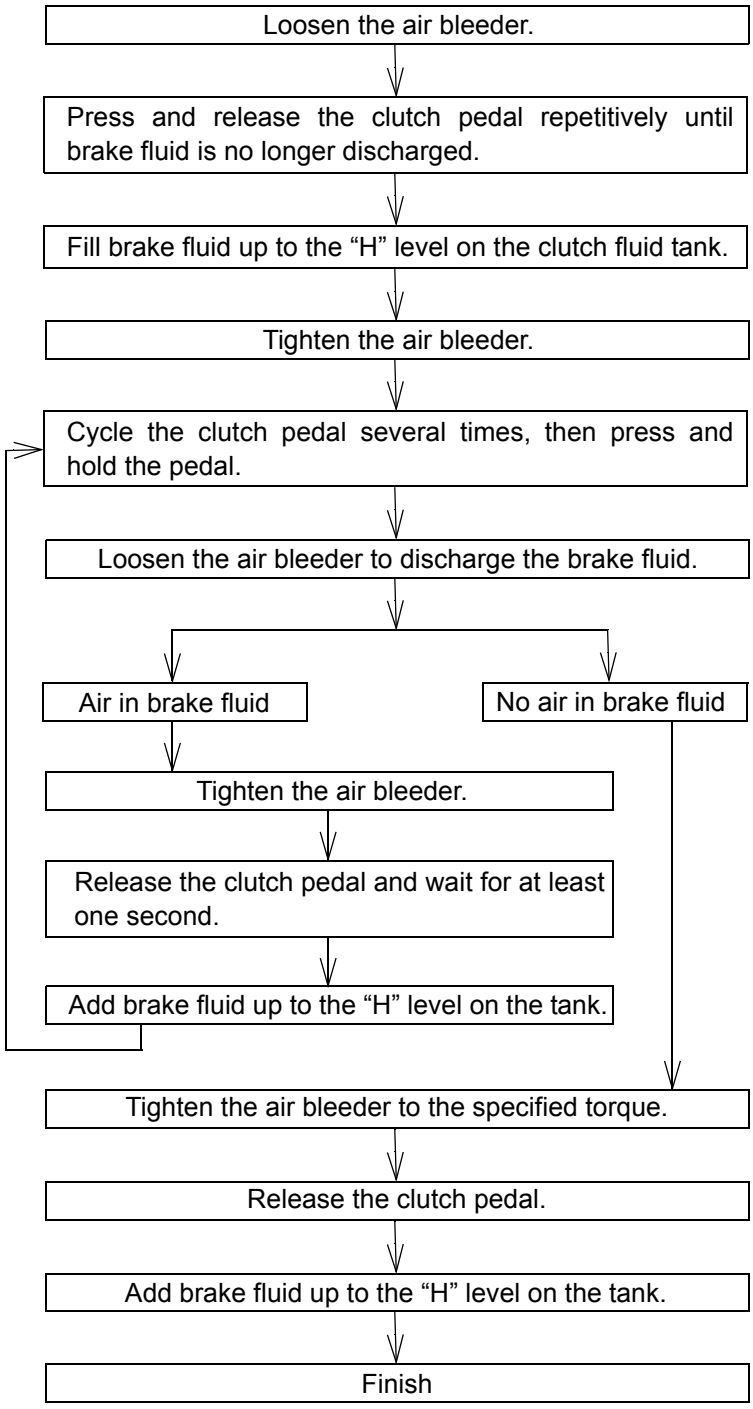

2. Air Bleeding of Brake Fluid (Clutch System)

Tightening torque (Unit: N·m {ft.lbs, kgf·m})

Mark	Parts to be tightened	Tightening torque	Remarks
–	Air bleeder	25 to 34 {18 to 25, 2.5 to 3.5}	–

Lubricant and/or sealant

Mark	Points of application	Specified lubricant and/or sealant	Quantity
–	Clutch fluid tank	Brake fluid (SAE J1703 or FMVSS No.116 DOT3)	As required

CAUTION ⚠

- **Brake fluid is corrosive on paintwork. Be careful not to spill it onto the paintwork.**
- **If brake fluid is spilled onto the paintwork, immediately wipe it off.**
- **Be sure to use new Brake Fluid (SAE J1703 or FMVSS No.116 DOT3). Do not mix it with brake fluid of different properties or mineral oil (gas oil, engine oil, gear oil, automatic transmission fluid, etc.). This will alter the original properties of FUSO Brake Fluid, causing the boiling point to drop as well as the clutch rubber parts to swell. Faulty operation of the clutch will result.**
- **Ensure that no foreign matter or water enter into the brake fluid when refilling it, as they will cause faulty clutch operation.**
- **Use a mug exclusively kept for the specified brake fluid. This ensures that no brake fluid of different properties or mineral oil enter into the system.**
- **When the water lamp ◎ in the meter cluster illuminates during work, start the engine to fully charge air pressure.**
- **When no fluid changer (pumping machine) is used, remove the clutch fluid tank, and secure it 35 mm {1.37 in.} above or higher in a simple way.**
- **Replenish brake fluid as necessary during work so that brake fluid in the clutch fluid tank is always between "H" and "L".**

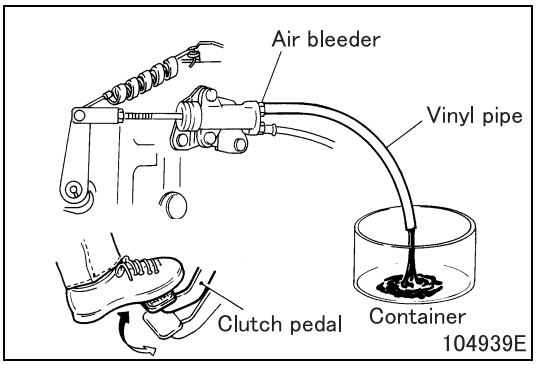

2.1 Work before air bleeding

- Install one end of a vinyl pipe onto the air bleeder in the clutch booster or clutch power cylinder. Place the loose end into a container as in the replacement procedure.

2.2 Air bleeding of brake fluid

- Bleed the air in the following sequence.

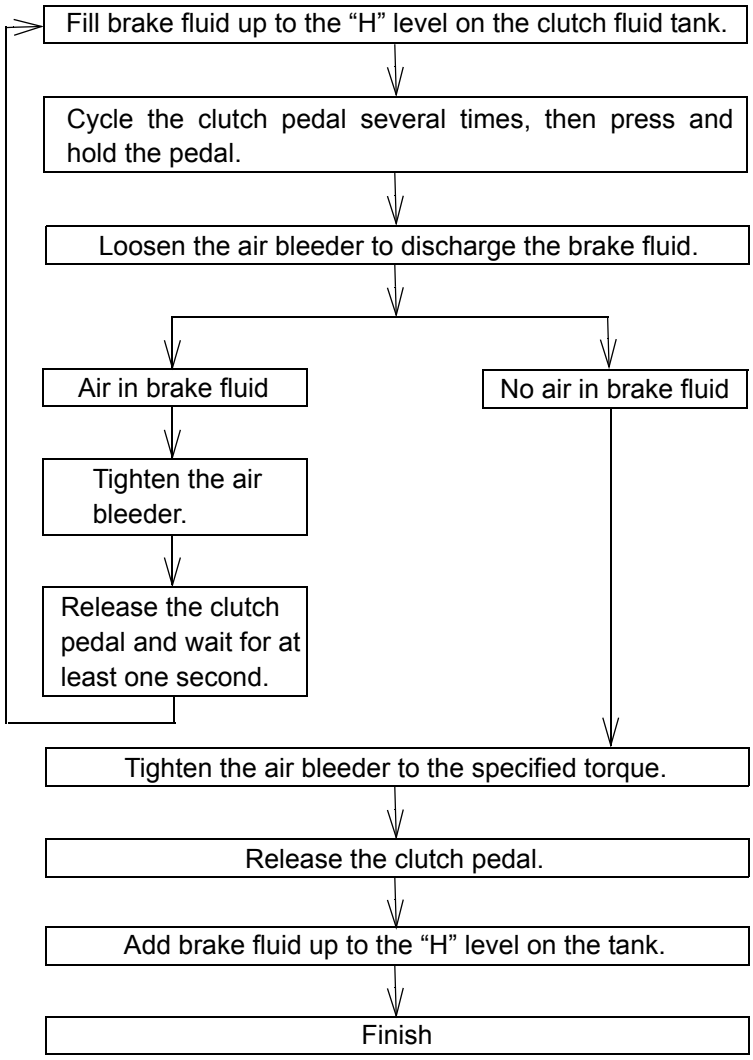

3. Clutch Pedal Play

Service standards (Unit: mm {in.})

Location	Maintenance item	Standard value	Limit	Remedy
–	Clutch power cylinder push rod travel	3.8 {0.15}	–	Adjust or replace
–	Clutch pedal play (clutch master cylinder push rod travel and clutch power cylinder push rod travel)	32 to 44 {1.26 to 1.73}	–	Adjust or replace

- Clutch pedal play is the combination of play on the clutch pedal side (clutch master cylinder push rod travel) and play on the clutch proper side (clutch power cylinder push rod travel), and can be checked in the following manner.

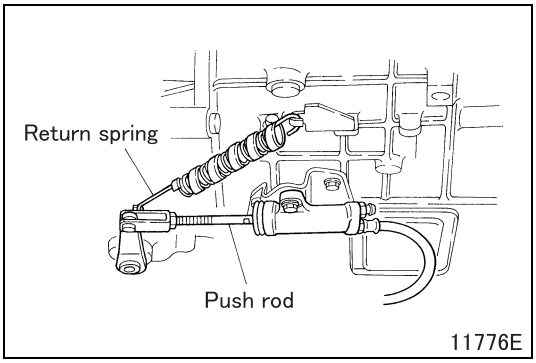

3.1 Clutch power cylinder push rod travel

- Perform this work after completing clutch pedal adjustment and air bleeding work.

[Inspection]

- Remove the return spring, and measure the movement (free travel) amount when moving the push rod by hand.
- If the measured distance deviates from the standard value, adjust as follows.

NOTE

- **When measurement is performed immediately after air bleeding work, the movement amount of the push rod is shown less than normal. Perform measurement after depressing the clutch pedal a few times for conditioning.**

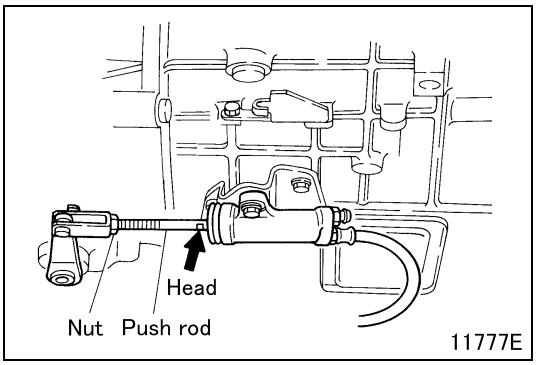

[Adjustment]

- Loosen the nut and extend the push rod by turning head of the rod until the rod no longer moves.
- Return the hexagonal nut portion of the rod to the following value from this condition, and tighten the nut.
  Return amount: 3 turns
- If the rod does not return to the above value, the clutch disc has worn beyond the service limit. Replace the clutch disc.
- After adjustment, install the return spring.

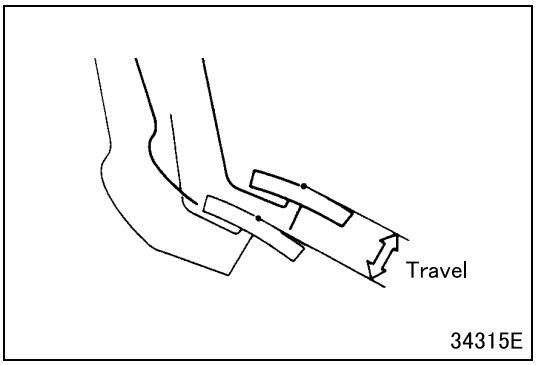

3.2 Clutch pedal play

[Inspection]

- Push the clutch pedal by hand and measure the movement amount (movement amount of push rod of clutch master cylinder and movement amount of push rod of clutch power cylinder) until resistance is felt.
- If the measured value deviates from the standard value, readjust clutch pedal play or replace clutch faulty parts.

4. Clearance Between Clutch Pedal and Floor

Service standards (Unit: mm {in.})

Location	Maintenance item	Standard value	Limit	Remedy
–	Clearance between clutch pedal and floor	40 {1.57} or more	–	Adjust or replace

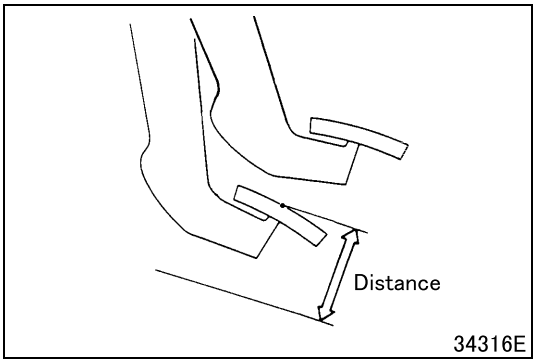

- Perform inspection at the position where the clutch is engaged in the following procedure.
- Apply the parking brake and run the engine at idle.
- Depressing the clutch pedal, shift the gear shift lever to the forward highest gear position.
- Gradually release the clutch pedal, and measure the clearance between the pedal and floor just before the clutch is engaged.

WARNING ⚠

- **Be careful not to allow the vehicle from starting suddenly. Pay full attention to the surrounding condition.**

- If the measured value is less than the standard value, repeat the adjustment of the play of clutch pedal or replace faulty parts.

5. Clutch Action

- Check that depressing the clutch pedal does not create any abnormal noise or require excessive effort.
- Check that gear shifting can be performed easily with the clutch pedal depressed. Check also that the clutch engagement is smooth and without any drag as the pedal is gradually released.
- If any abnormality is encountered, repair or replace faulty parts.

CLUTCH PEDAL

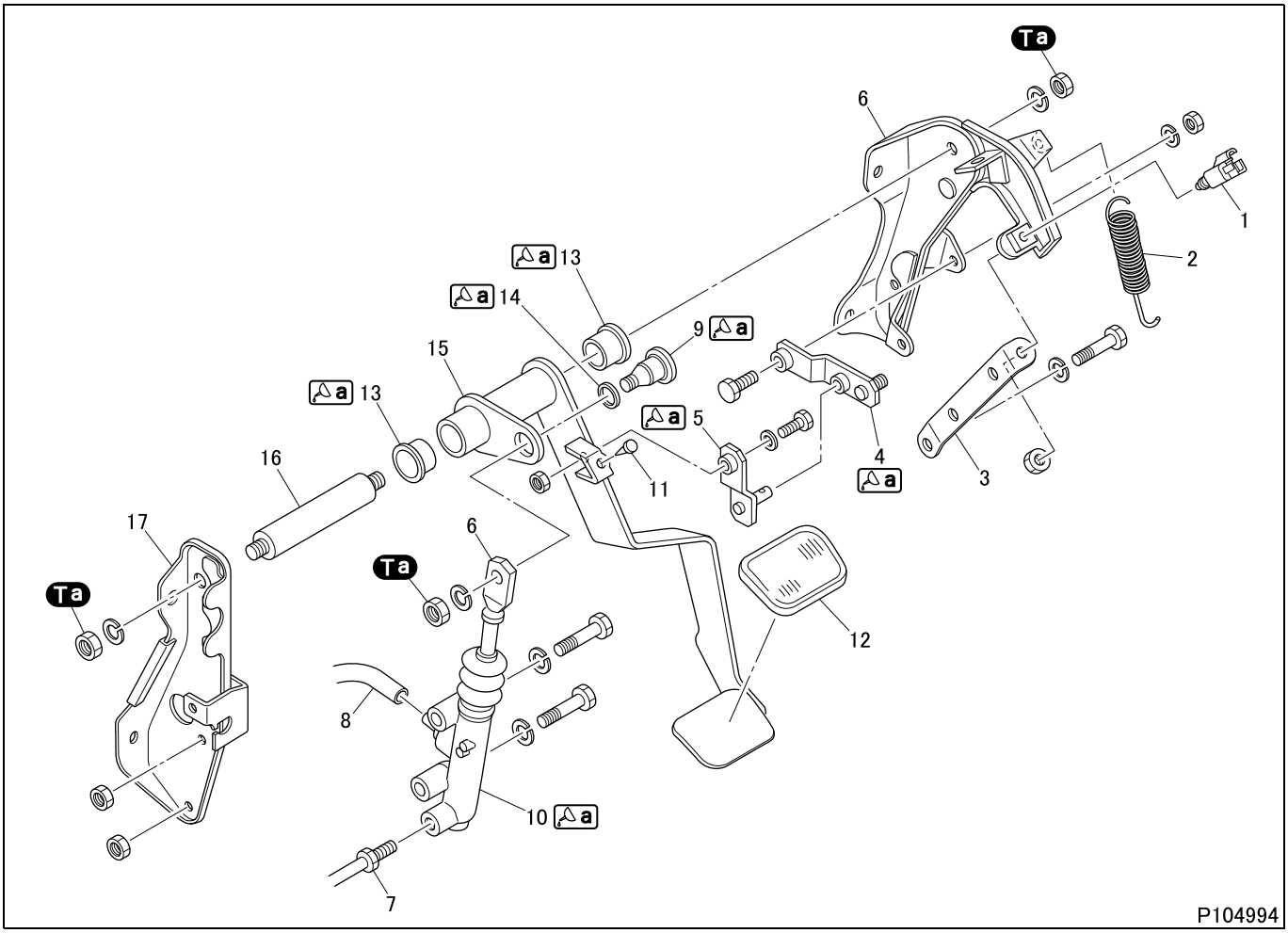

● **Removal sequence**

1 Clutch switch
2 Return spring
3 Clutch switch stay
4 Lever B
5 Lever A
6 Clutch pedal bracket
7 Fluid pipe
8 Fluid hose
9 Offset bolt
10 Clutch master cylinder (See CLUTCH MASTER CYLINDER.)
11 Clutch switch stopper
12 Pedal pad
13 Bushing
14 Bushing
15 Clutch pedal
16 Pedal shaft
17 Clutch pedal bracket

● **Installation sequence**

Follow the removal sequence in reverse.

Service standards (Unit: mm {in.})

Location	Maintenance item	Standard value	Limit	Remedy
2	Return spring load (installed length: 123.5 {4.86})	69.6 N {16 lbs, 7.1 kgf}	–	Replace
9, 14	Clearance between offset bolt and bushing	0.07 to 0.29 {0.0028 to 0.0115}	–	Replace
13, 16	Clearance between bushing and pedal shaft	0.07 to 0.22 {0.0028 to 0.0087}	–	Replace

Tightening torque (Unit: N·m {ft.lbs, kgf·m})

Mark	Parts to be tightened	Tightening torque	Remarks
Ta	Nut (pedal shaft mounting)	48.1 ± 9.8 {35 ± 7.2, 4.9 ± 1}	–
	Nut (offset bolt mounting)		

Lubricant and/or sealant

Mark	Points of application	Specified lubricant and/or sealant	Quantity
a	Mounting area of offset bolt of clutch master cylinder	Chassis grease [NLGI No.1 (Li soap)]	As required
	Inner surface of bushing		
	Inner surface of bushing of lever A and B		

◆Inspection procedure◆

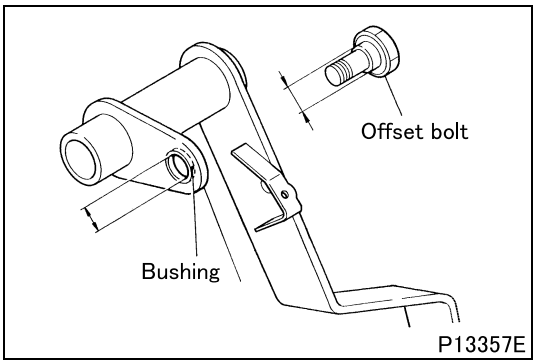

■ Inspection: Clearance between offset bolt and bushing

[Inspection]

- If the measured value does not conform to the standard value, replace the bushing.

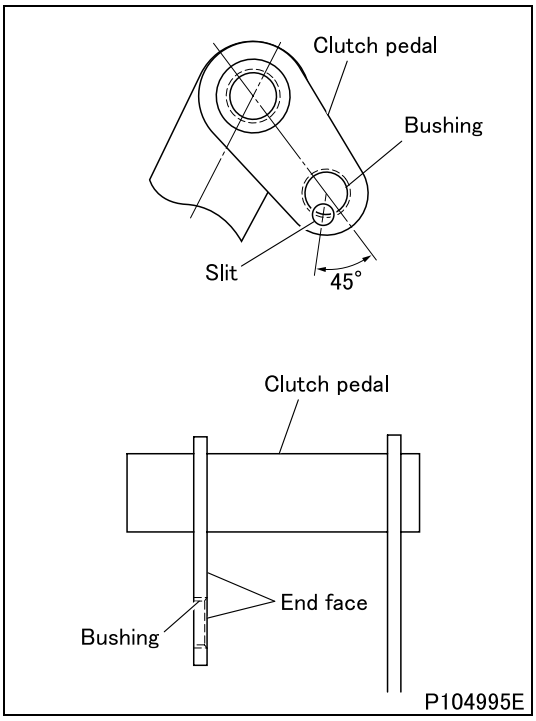

Removal and installation of bushing

[Installation]

- Adjust the slit of the bushing within the range of the angle shown in the illustration and press the bushing into the end face of the clutch pedal.

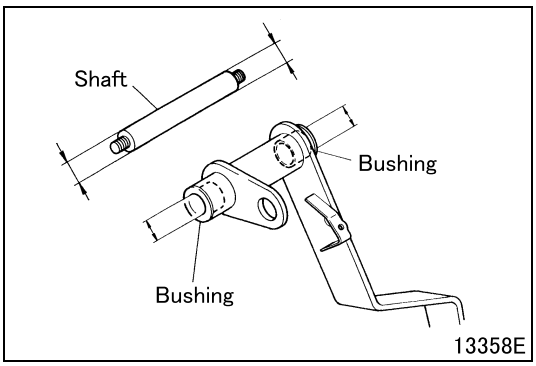

■ **Inspection: Clearance between bushing and pedal shaft**

- If the measured value does not conform to the standard value, replace the bushing.

◆Adjustment after assembly◆

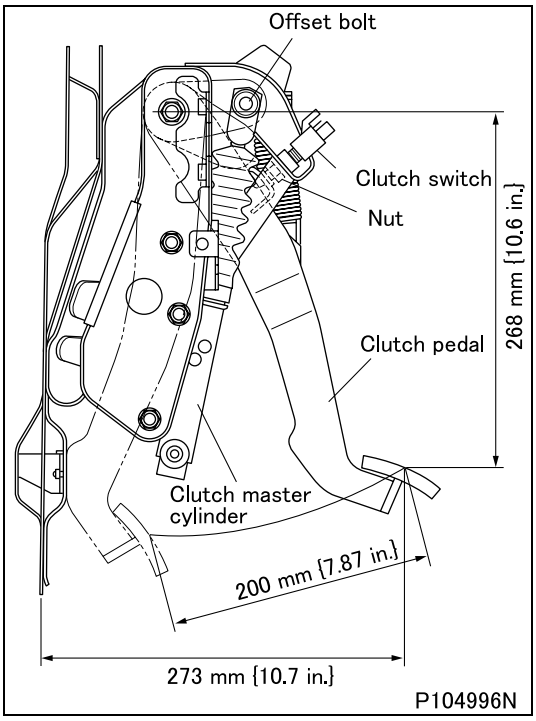

■ **Adjustment: Clutch pedal**

- Loosen the offset bolt.
- Rotate the clutch switch such that the distances indicated in the drawing are achieved on the clutch pedal. Tighten the nut fixing the clutch switch.

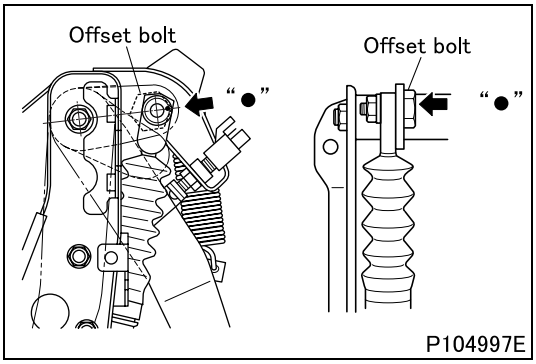

- Prior to the previous steps, temporarily tighten offset bolt such that "•" mark on the bolt is located as illustrated.

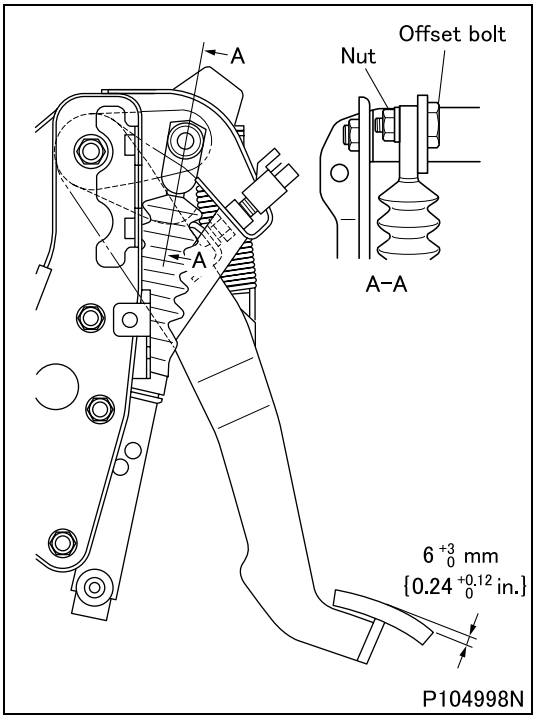

- Now, rotate the offset bolt such that the clutch pedal has the play indicated in the drawing at its end. Tighten the nut.

CLUTCH MASTER CYLINDER

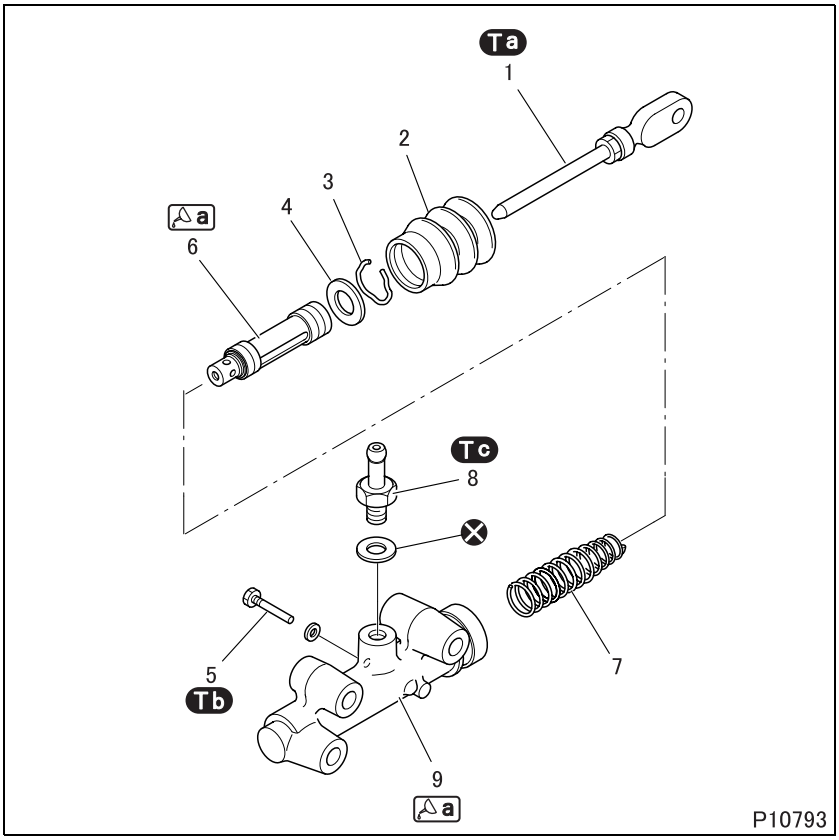

● **Disassembly sequence**

1 Push rod
2 Boot
3 Piston stop ring
4 Piston stop plate
5 Supply valve stopper
6 Piston
7 Return spring
8 Nipple
9 Cylinder

⊗: Non-reusable parts

● **Assembly sequence**

Follow the disassembly sequence in reverse.

Repair kit: Piston and boot kit

Service standards (Unit: mm {in.})

Location	Maintenance item	Standard value	Limit	Remedy
6, 9	Clearance between piston and cylinder	0.020 to 0.105 {0.00079 to 0.0041}	0.2 {0.0079}	Replace
7	Free length of return spring	97 {3.82}	92 {3.62}	Replace

Tightening torque (Unit: N·m {ft.lbs, kgf·m})

Mark	Parts to be tightened	Tightening torque	Remarks
Ta	Push rod (lock nut mounting)	9.8 to 15 {7.2 to 11, 1.0 to 1.5}	–
Tb	Supply valve stopper	1.5 to 2.9 {1.1 to 2.2, 0.15 to 0.30}	–
Tc	Nipple	25 to 34 {18 to 25, 2.5 to 3.5}	–

Lubricant and/or sealant

Mark	Points of application	Specified lubricant and/or sealant	Quantity
a	Sliding surfaces between piston and cylinder	Rubber grease	As required

◆Removal procedure◆

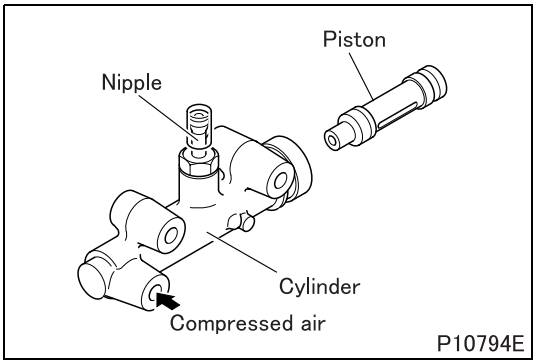

■ **Removal: Piston**

- Close the opening of the nipple on the cylinder. Wrap the cylinder body with a shop towel or equivalent around the opening to catch the piston.
- Feed compressed air gradually starting from 0 kPa {0 psi, 0 kgf/cm^2} to remove the piston.

WARNING ⚠

- **Do not apply compressed air suddenly at high pressure. Otherwise, the piston will fly out with full force.**

◆Adjustment procedure◆

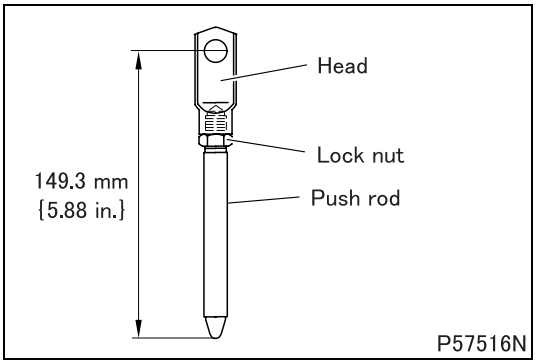

■ **Adjustment: Push rod length**

- If the illustrated dimension does not conform to the standard value, loosen the lock nut of the push rod and turn the head to adjust.
- After adjustment, tighten the lock nut.

◆Installation procedure◆

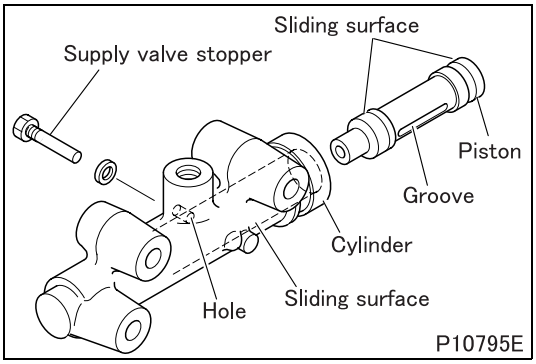

■ **installation: Piston**

- Apply grease to sliding surfaces of the piston and cylinder.
- Align the piston groove with the cylinder hole, and use the supply valve stopper as a detent.

CLUTCH POWER CYLINDER

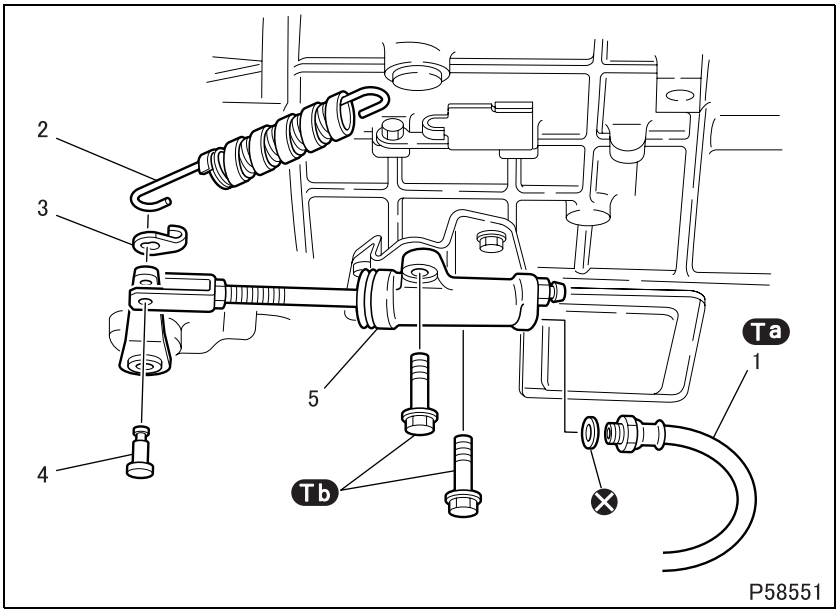

● Removal sequence

1 Fluid hose
2 Return spring
3 Return spring claw
4 Clevis pin
5 Clutch power cylinder
(See later section.)

CAUTION ⚠

- **After removing fluid hose, fit blanking plugs into its openings to prevent fluid from flowing out.**

● Installation sequence

Follow the removal sequence in reverse.

Tightening torque (Unit: N·m {ft.lbs, kgf·m})

Mark	Parts to be tightened	Tightening torque	Remarks
Ta	Fluid hose connection	21 to 31 {15 to 23, 2.1 to 3.2}	–
Tb	Bolt (clutch power cylinder mounting)	47 {35, 4.8}	–

Clutch Power Cylinder

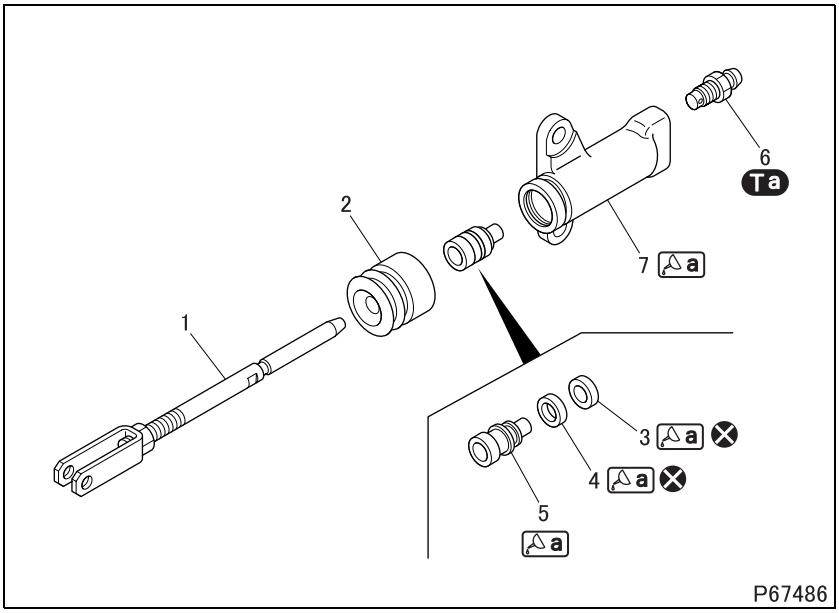

● **Disassembly sequence**

1 Push rod
2 Boot
3 Piston cup A
4 Piston cup B
5 Piston
6 Air bleeder plug
7 Cylinder

⊗: Non-reusable parts

● **Assembly sequence**

Follow the disassembly sequence in reverse.

Service standards (Unit: mm {in.})

Location	Maintenance item	Standard value	Limit	Remedy
3, 7	Clearance between cylinder and piston	0.040 to 0.125 {0.0016 to 0.0049}	0.24 {0.0094}	Replace

Tightening torque (Unit: N·m {ft.lbs, kgf·m})

Mark	Parts to be tightened	Tightening torque	Remarks
Ta	Air bleeder	25 to 34 {18 to 25, 2.5 to 3.5}	–

Lubricant and/or sealant

Mark	Points of application	Specified lubricant and/or sealant	Quantity
a	Piston cup circumference	Rubber grease	As required
	Friction surface of piston		
	Cylinder bore		

CLUTCH PROPER

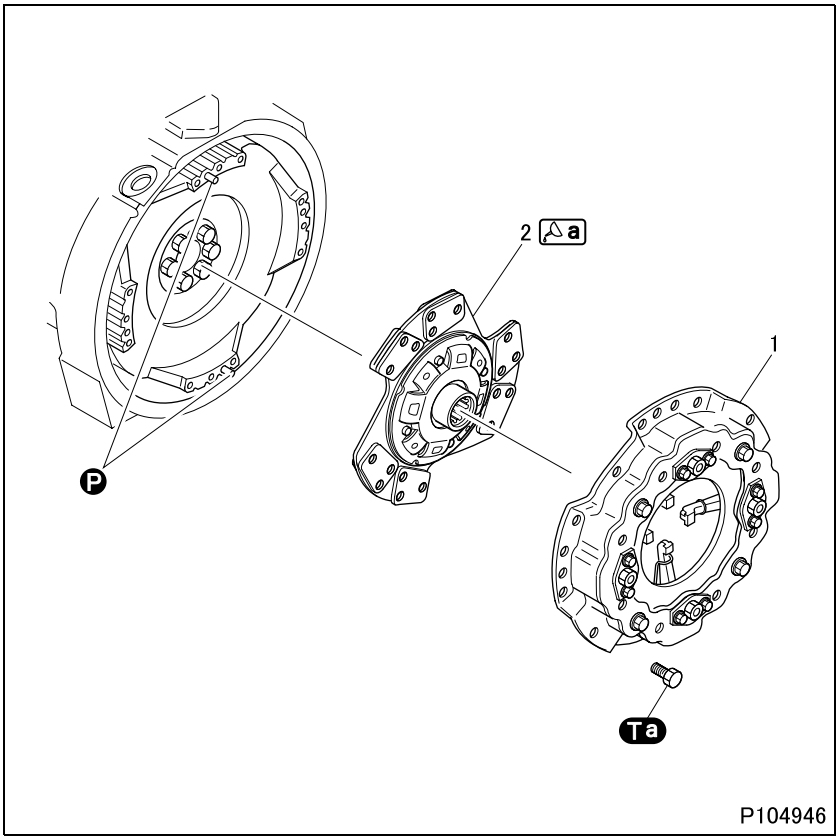

● **Removal sequence**

1 Pressure plate and lever assembly (See later section.)
2 Clutch disc

Ⓟ: Locating pin

WARNING ⚠

- **The pressure plate and lever assembly is heavy, about 26 kg {57 lb}. Handle it with care.**

● **Installation sequence**

Follow the removal sequence in reverse.

CAUTION ⚠

- **Take care not to allow oil and grease on the surface of the clutch disc, because it can cause the clutch to slip.**

Service standards (Unit: mm {in.})

Location	Maintenance item		Standard value	Limit	Remedy
2	Clutch disc	Lateral runout	0 to 1.2 {0 to 0.047}	–	Replace
		Vertical runout	0 to 1.2 {0 to 0.047}	–	Replace
		Play in revolving direction in splines	0.07 to 0.23 {0.0028 to 0.0091}	0.5 {0.020}	Replace
		Depth from facing surface to cup	1.88 to 2.62 {0.074 to 0.103}	0.2 {0.0079}	Replace

Tightening torque (Unit: N·m {ft.lbs, kgf·m})

Mark	Parts to be tightened	Tightening torque	Remarks
Ta	Bolt (clutch cover mounting)	33 to 49 {24 to 36, 3.3 to 5.0}	–

Lubricant and/or sealant

Mark	Points of application	Specified lubricant and/or sealant	Quantity
a	Spline surface	Molybdenum disulfide grease [NLGI No.2 (Li soap)]	1.1 to 1.6 g {0.039 to 0.056 oz}
			4.2 to 5.9 g {0.15 to 0.21 oz}

Special tools (Unit: mm {in.})

Mark	Tool name and shape	Part No.	Application
a	Clutch alignment arbor 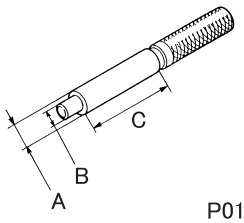 P01270 A: φ36.2 {1.43}; B: φ20 {0.79}; C: 105 {4.13}	MH061987	Holding clutch disc
b	Stopper bolt 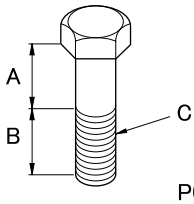 P01292 A: 49 {1.93}; B: 26 {1.02}; C: M10×1.25	43402-09200	Removal and installation of pressure plate and lever assembly (4 bolts to be used)
c	Washer 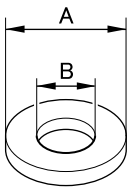 P57108 A: φ22 {0.87}; B: φ10.5 {0.41}	MH005024	Removal and installation of pressure plate and lever assembly (4 bolts to be used)

◆Removal procedure◆

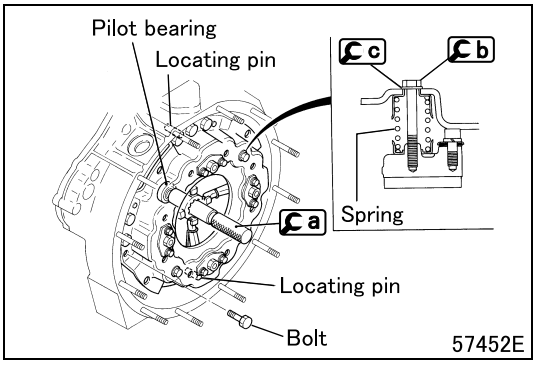

■ Removal: Pressure plate and lever assembly

- Insert a into the pilot bearing of the flywheel to support the clutch disc.
- Secure with b and c at 4 locations, push and compress the diaphragm spring and then remove the bolt.

CAUTION ⚠

- **Be sure to use b and c when removing the bolt. Otherwise, the pressure plate and lever assembly rise with the pressure spring force, damaging the strap plate. In addition, the pressure plate and lever assembly fall off from the locating pin of the flywheel.**

◆Inspection procedure◆

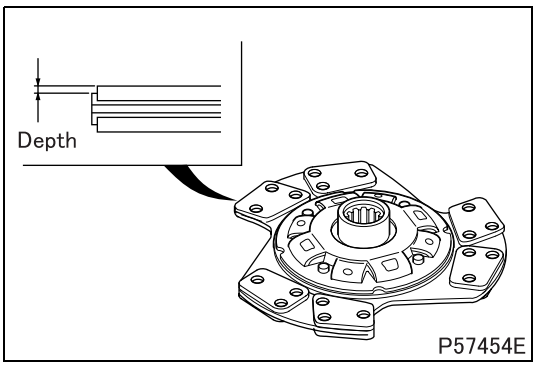

■ **Inspection: Clutch disc**

(1) Depth from facing surface to rivet <Woven> or cup <Ceramic metal>

- If the measured value is equal to or less than the limit, replace the clutch disc.

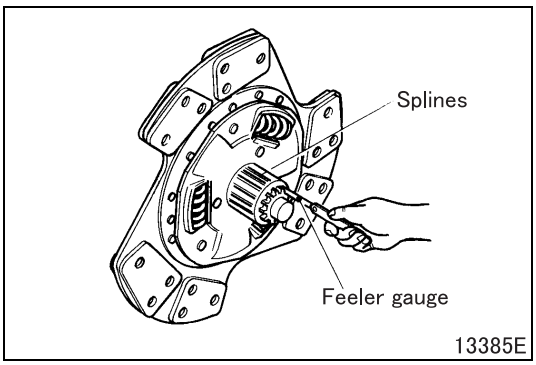

(2) Play in revolving direction in splines

- Reshape a feeler gauge such that it can be inserted into the drive pinion splines. Then, using the gauge, measure the splines for play in revolving direction.
- If the measured value is equal to or exceeds the limit, replace the clutch disc.

◆Installation procedure◆

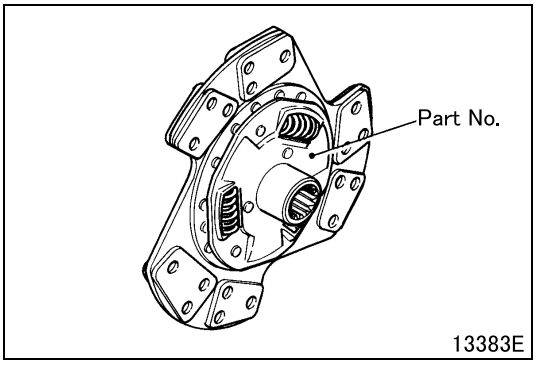

■ **Installation: Clutch disc**

- Install the clutch disc so that its Part No.can be seen.

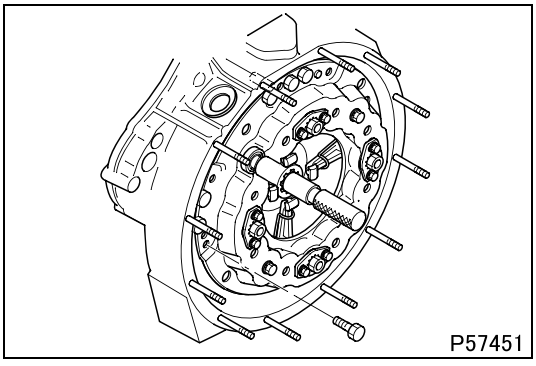

■ **Installation: Pressure plate and lever assembly**

- Install the pressure plate and lever assembly by following the removal procedure in reverse.
  (See "■**Removal: Pressure plate and lever assembly**".)
- Tighten the bolts diagonally and gradually to the specified torque.

CAUTION ⚠

- **After installation, be sure to remove Cb and Cc (4 locations). If they are left installed, the clutch cannot be engaged.**

M E M O

CLUTCH PROPER

Pressure plate and lever assembly

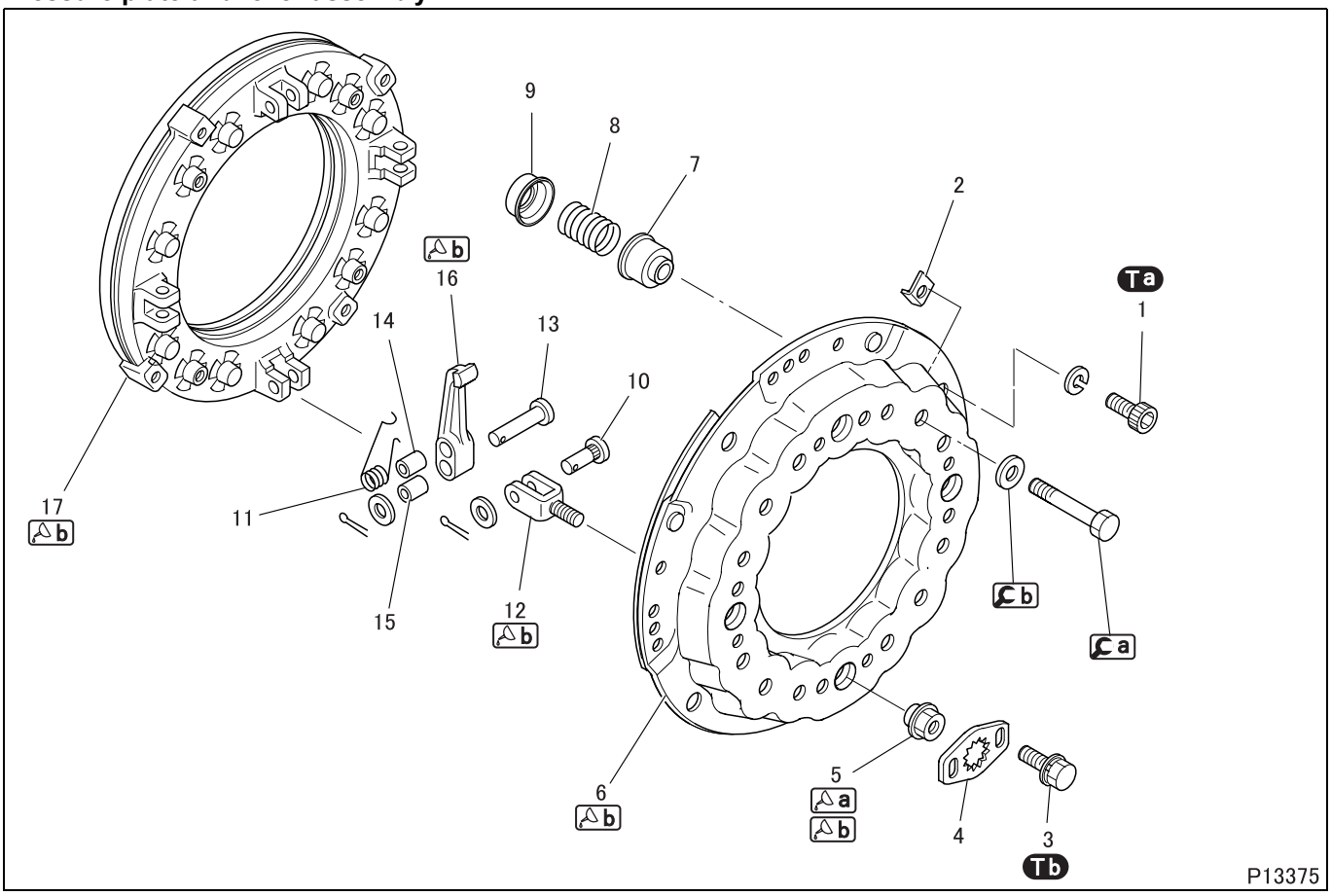

● **Disassembly sequence**

1 Strap bolt
2 Washer
3 Lock bolt
4 Lock plate
5 Support nut
6 Clutch cover
7 Pressure spring seat
8 Pressure spring
9 Pressure spring seat
10 Lever support pin
11 Return spring
12 Lever support
13 Release lever pin
14 Bushing
15 Bushing
16 Release lever
17 Pressure plate

CAUTION ⚠

- **After removing the support nut, remove [a] and [b] that were installed when the pressure plate and lever were removed.**

NOTE

- **Do not remove the bushing unless any abnormality is found.**

● **Assembly sequence**

Follow the disassembly sequence in reverse.

Repair kit: Clutch release lever kit

Service standards (Unit: mm {in.})

Location	Maintenance item		Standard value	Limit	Remedy
1, 6	Clearance between strap bolt and strap plate of clutch cover		0 to 0.16 {0 to 0.0063}	0.3 {0.012}	Replace
8	Pressure spring	Installed load (installed length 56.05 {2.21})	1081 N {240 lbs, 110.2 kgf}	919 N {205 lbs, 93.7 kgf}	Replace
		Slant	0 to 3.6 {0 to 0.14}	5.0 {0.20}	
10, 14	Clearance between lever support pin and bushing		0.017 to 0.126 {0.00067 to 0.0050}	0.4 {0.016}	Replace
13, 15	Clearance between release lever pin and bushing		0.016 to 0.118 {0.00063 to 0.0046}	0.4 {0.016}	Replace
16	Height of release lever		62.1 ± 0.8 {2.44 ± 0.031}	Difference between any two: 0.5 {0.020} or less	Adjust
17	Pressure plate	Thickness	30.8 ± 0.1 {1.21 ± 0.0039}	28 {1.10}	Replace
		Flatness	0 to 0.05 {0 to 0.0020}	0.2 {0.0079}	Correct or replace
		Inside diameter of fitting hole of strap bolt	10.2 to 10.25 {0.402 to 0.404}	10.5 {0.41}	Replace

Tightening torque (Unit: N·m {ft.lbs, kgf·m})

Mark	Parts to be tightened	Tightening torque	Remarks
Ta	Strap bolt (strap plate mounting)	39 to 49 {29 to 36, 4 to 5}	–
Tb	Bolt (lock plate mounting)	9.8 to 14.7 {7.2 to 11, 1.0 to 1.5}	–

Lubricant and/or sealant

Mark	Points of application	Specified lubricant and/or sealant	Quantity
a	Threaded and spherical surfaces of support nut	Anti-seizure compound	As required
b	Sliding surface of support nut and clutch cover	Molybdenum disulfide grease [NLGI No.2 (Li soap)]	As required
	Sliding surface of lever support and release lever		
	Sliding surface of release lever and pressure plate		

Special tools (Unit: mm {in.})

<table>
<tr><th>Mark</th><th>Tool name and shape</th><th>Part No.</th><th>Application</th></tr>
<tr><td>a</td><td>Stopper bolt
 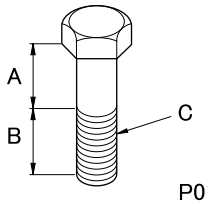

P01292
<table><tr><th>A</th><th>B</th><th>C</th></tr><tr><td>49
{1.93}</td><td>26
{1.02}</td><td>M10×1.25</td></tr></table></td><td>43402-09200</td><td rowspan="2">Removal and installation of pressure plate and lever assembly (4 bolts to be used)</td></tr>
<tr><td>b</td><td>Washer
<table><tr><th>A</th><th>B</th></tr><tr><td>ϕ22
{0.87}</td><td>ϕ10.5
{0.41}</td></tr></table> 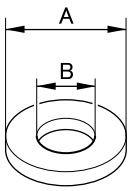

P57108</td><td>MH005024</td></tr>
<tr><td>c</td><td>Clutch master plate
 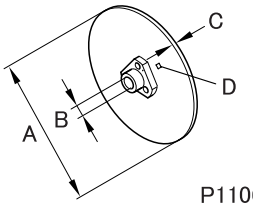

P11065
<table><tr><th>A</th><th>B</th><th>C</th><th>D</th></tr><tr><td>ϕ380
{15.0}</td><td>ϕ38
{1.50}</td><td>11.4
{0.45}</td><td>“7”</td></tr></table></td><td>MH062353</td><td>Adjustment of release lever heights</td></tr>
<tr><td>d</td><td>Clutch alignment arbor
<table><tr><th>A</th><th>B</th><th></th></tr><tr><td>ϕ36.2
{1.43}</td><td>ϕ20
{0.79}</td><td>105
{4.13}</td></tr></table> 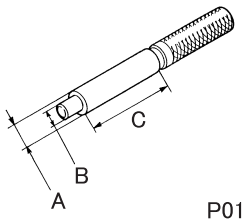

P01270</td><td>MH061987</td><td>Holding clutch master plate</td></tr>
<tr><td>e</td><td>Clutch installer
 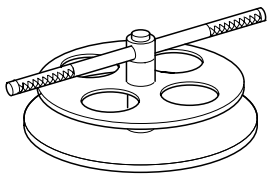
P01306</td><td>MH061331</td><td>Removal and installation of clutch cover</td></tr>
</table>

◆Work before removal◆

■ Alignment mark: Pressure plate and lever assembly

- Make an alignment mark on each joint of parts before disassembly.

◆Removal procedure◆

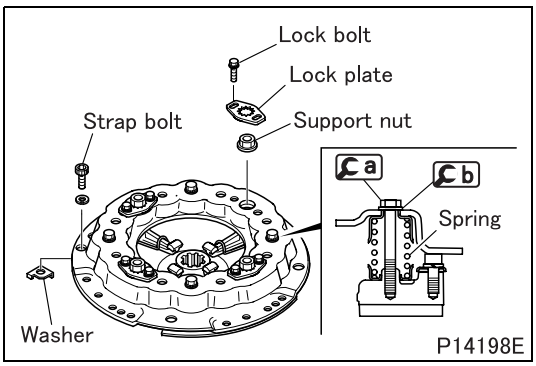

■ **Removal: Clutch cover**

- Secure with a and b at 4 locations and remove the strap bolt, washer, lock bolt, lock plate and support nut while pushing and compressing the pressure spring.

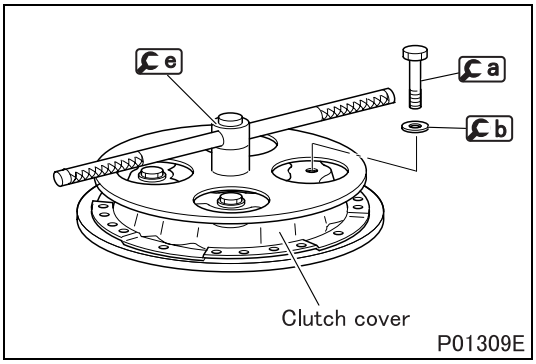

- Remove a and b (4 locations) using e with the pressure spring pushed and compressed.
- Gradually loosen e and remove the clutch cover after the pressure spring becomes ineffective.

◆Inspection procedure◆

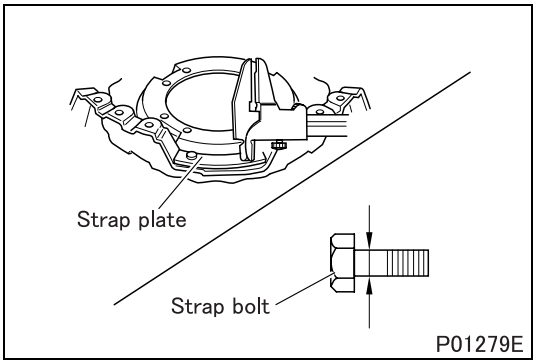

■ **Inspection: Clearance between strap bolt and strap plate of clutch cover**

- If the measured value exceeds the specified limit, replace faulty parts.

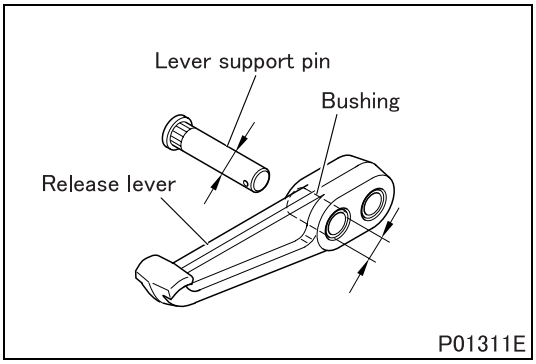

■ **Inspection: Clearance between lever support pin and bushing**

- If the measured value exceeds the specified limit, replace the bushing.

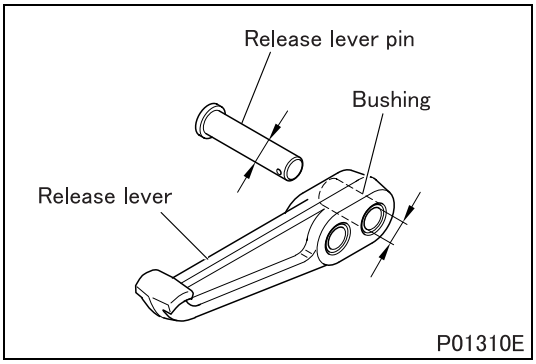

■ **Inspection: Clearance between release lever pin and bushing**

- If the measured value exceeds the specified limit, replace the bushing.

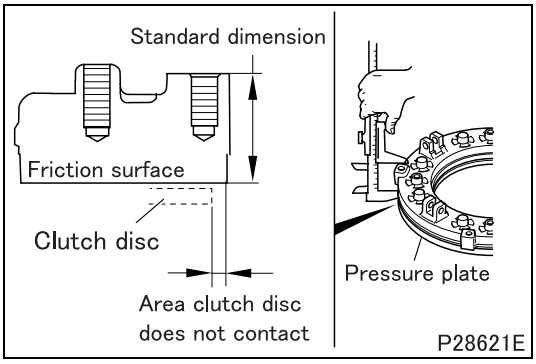

■ **Inspection: Pressure plate**

(1) Thickness

- Measure the thickness of the pressure plate at the friction surface in the following procedure. If the measured value exceeds the specified limit, replace the pressure plate.
- Measure the standard dimension (area the clutch disc does not contact).

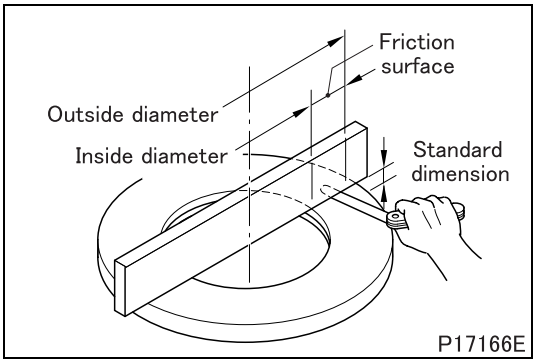

- Measure the clearance between the friction surface (within the illustrated range) and the standard dimension, and deduct this value from the standard dimension. This value is the thickness of the pressure plate.

Outside diameter	370 mm {14.6 in.}
Inside diameter	240 mm {9.45 in.}

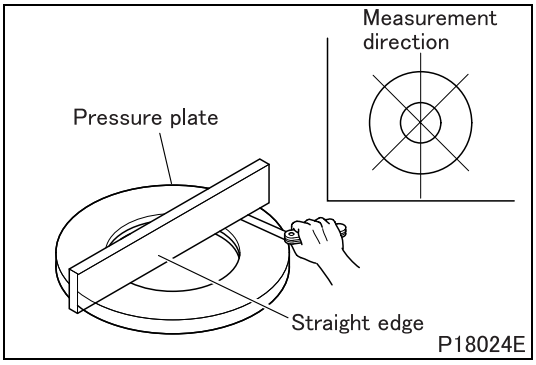

(2) Flatness

- Measure the clearance between the pressure plate and straight edge. (Consider the pressure plate as a plane.)
- If the measured value exceeds the specified limit, correct or replace the pressure plate.

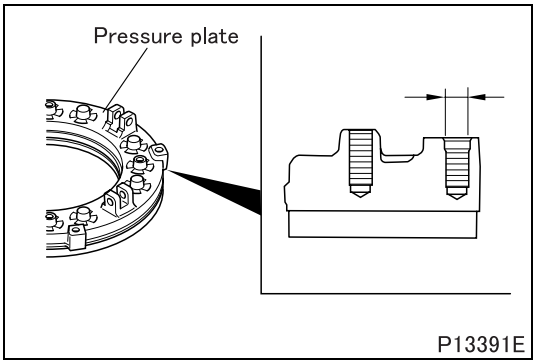

(3) Inside diameter of strap bolt fitting hole

- If the measured value exceeds the specified limit, replace the pressure plate.

◆Installation procedure◆

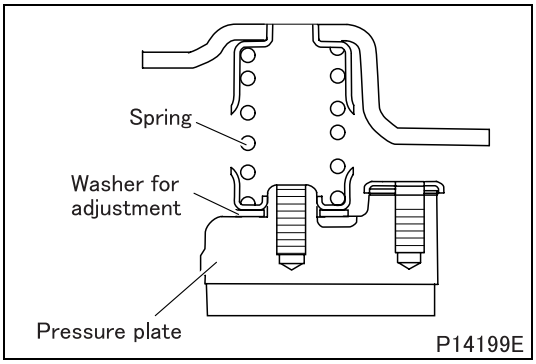

■ Installation: Pressure spring

- If the pressure plate is corrected by grinding, assemble between the pressure plate and pressure spring a washer for adjustment equivalent to the correction amount by grinding.

Amount of correction made by grinding	Thickness of adjusting washer
Less than 1 mm {0.039 in.}	Not required
1 to 2 mm {0.039 to 0.079 in.}	1.2 mm {0.047 in.} × 1
2 to 3 mm {0.079 in. to 0.12 in.}	1.2 mm {0.047 in.} × 2 or, 2.3 mm {0.091 in.} × 1

■ Installation: Clutch cover

- To install, follow the removal sequence in reverse. (See "■ **Removal: Clutch cover**".)

◆Work after installation◆

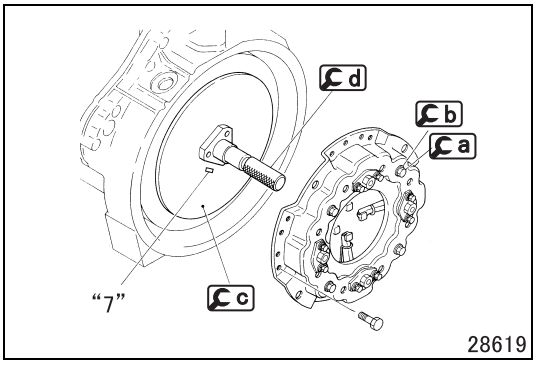

■ Inspection: Height of release lever

[Inspection]

- Install the pressure plate and lever using c and d instead of the clutch disc.
- Install c so that identification mark "7" can be seen.

CAUTION ⚠

- **After installing the pressure plate and lever, be sure to remove a and b (4 locations) to perform inspection and adjustment.**

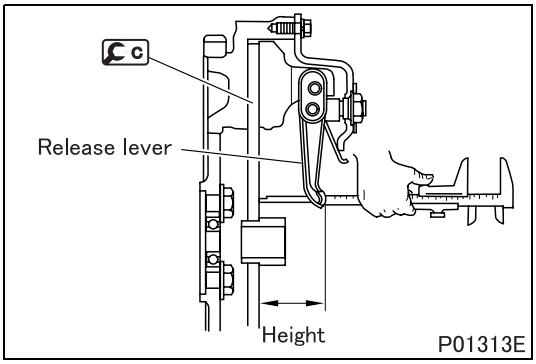

- Measure the height from c to the top surface of each release lever (4 locations).
- If the measured value deviates from the standard value, make adjustment in the following procedure. Even if the measured value is within the standard value, make adjustment when the mutual difference between each measured value is 0.5 mm or more.

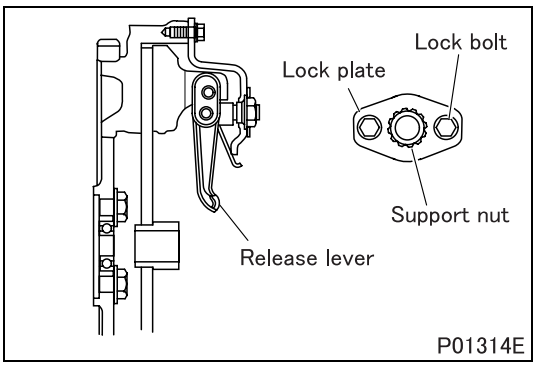

[Adjustment]

- Remove the lock bolt and lock plate, and turn the support nut to adjust the release lever.
- After adjustment, install the lock plate, and secure the support nut. Then, check the height of the release lever.

M E M O

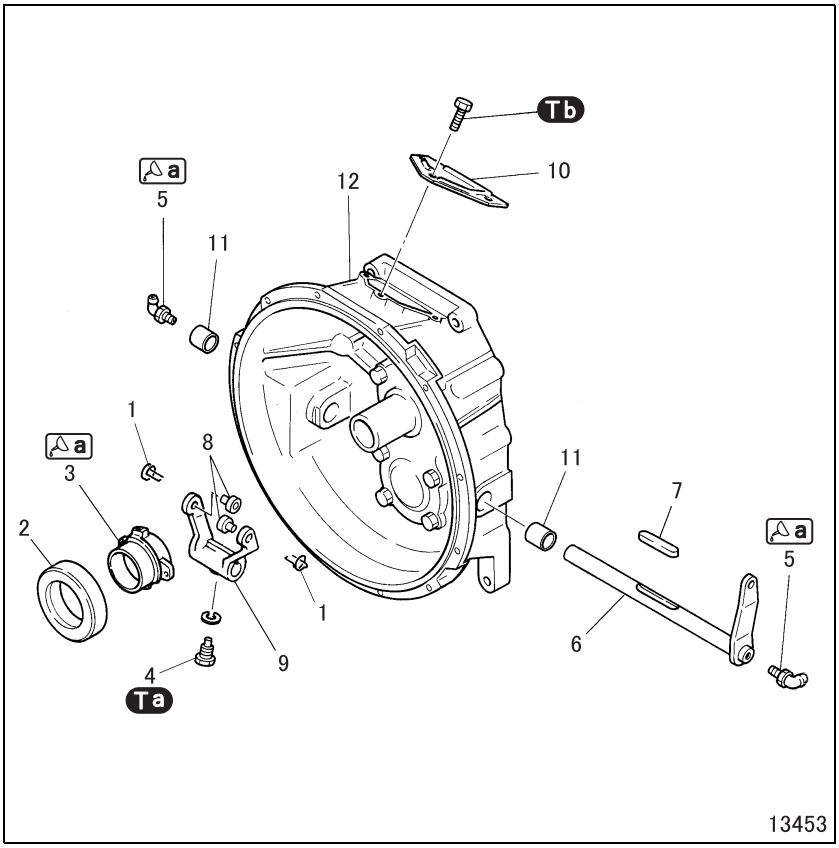

● **Disassembly sequence**

1 Return spring
2 Release bearing
3 Clutch shifter
4 Set screw
5 Grease nipple
6 Release fork shaft
7 Key
8 Cam follower
9 Release fork
10 Clutch housing cover
11 Needle roller bearing
12 Clutch housing

NOTE

- **Do not remove the needle roller bearing unless any abnormality is found.**

● **Assembly sequence**

Follow the disassembly sequence in reverse.

CAUTION ⚠

- **When supplying grease from the grease nipple, do not supply too much to prevent clutch slippage.**
- **Be sure to use the specified grease to avoid seizure.**

Tightening torque (Unit: N·m {ft.lbs, kgf·m})

Mark	Parts to be tightened	Tightening torque	Remarks
Ta	Set screw	20.6 {15, 2.1}	–
Tb	Bolt (clutch housing cover mounting)	9.8 to 15 {7.2 to 11, 1.0 to 1.5}	–

Lubricant and/or sealant

Mark	Points of application	Specified lubricant and/or sealant	Quantity
a	Clutch shifter contact surface with release fork	Esso TEMPREX N3	As required
	Greasing from grease nipple		

Special tools (Unit: mm {in.})

Mark	Tool name and shape	Part No.	Application
Ca	Needle roller bearing installer A: φ30 {1.18}, B: φ23 {0.91} 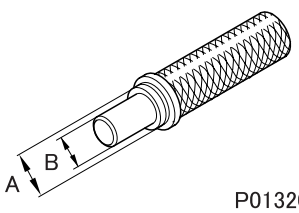 P01320	03726-83000	Installation of needle roller bearing installer

◆Installation procedure◆

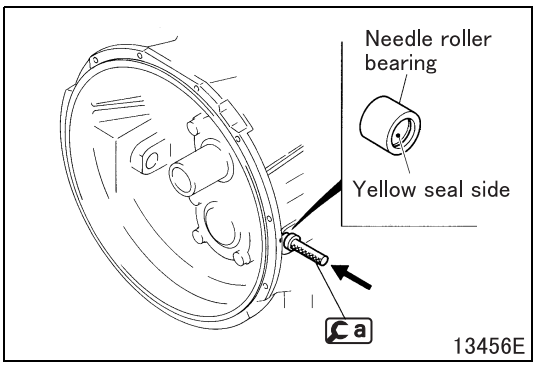

■ **Installation: Needle roller bearing**

- Install the needle roller bearing with the yellow seal side facing outward.

CAUTION ⚠

- **To prevent damage, do not strike the needle roller bearing directly with a hammer when installing it.**

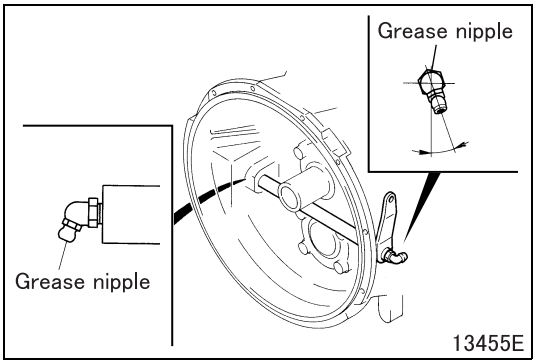

■ **Installation: Grease nipple and connector**

- Install the grease nipple and connector on the clutch housing in the illustrated direction.

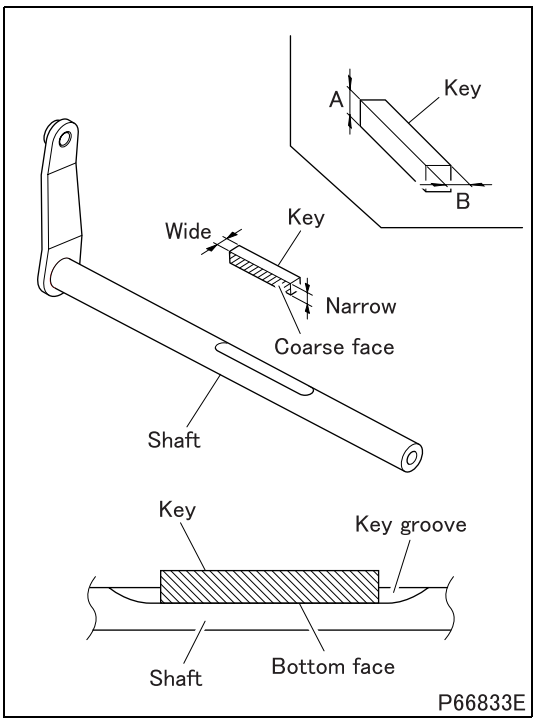

■ **Installation: Key**

- Install the key such that the faces with coarse finish face the front and rear of the vehicle.
- If it is difficult to identify the coarse faces, measure the illustrated dimensions A and B. Then, install the key such that the faces with greater (wide) dimensions face up and down.

Width (wide)	$7\ ^{+0.028}_{+0.019}$ mm {$0.28\ ^{+0.0011}_{+0.0007}$ in.}
Width (narrow)	$7\ ^{0}_{-0.13}$ mm {$0.28\ ^{0}_{-0.0051}$ in.}

- The key must be installed in the key groove in the release fork shaft such that it bottoms out and that it is centered in the groove.

Group 22A

Manual Transmission <M060S6, M070S6>

Table of Contents

Back

Home

MITSUBISHI FUSO TRUCK OF AMERICA, Inc.

Pub.No.TWME0709-22A

INDEX

SPECIFICATIONS 22A-2

STRUCTURE AND OPERATION
1. Transmission 22A-3
2. Synchromesh Mechanism 22A-4
3. Power Shift 22A-7
4. Interlock Mechanism 22A-9

TROUBLESHOOTING 22A-10

ON-VEHICLE INSPECTION AND ADJUSTMENT
1. Inspection of Transmission Oil Leakage 22A-12
2. Inspection of Looseness in Transmission Mounting Bolts 22A-12
3. Inspection of Play and Looseness in Companion Flange 22A-12
4. Inspection and Replacement of Transmission Oil 22A-13

REMOVAL AND INSTALLATION OF TRANSMISSION 22A-14

GEAR SHIFTER UPPER AND INTERLOCK PLATE 22A-18

POWER SHIFT 22A-24

EXTENSION HOUSING AND PARKING BRAKE 22A-32

REVERSE IDLER GEAR <M060> 22A-38

6TH GEAR <M060> 22A-40

REVERSE GEAR AND REVERSE IDLER GEAR <M070> 22A-46

TRANSMISSION BODY 22A-50

DRIVE PINION 22A-68

MAINSHAFT
<M060> 22A-70
<M070> 22A-82

COUNTERSHAFT 22A-94

TRANSMISSION CONTROL 22A-98

PULLER AND INSTALLER KIT 22A-102

SPECIFICATIONS

Item			Specifications	
Mode of control			Floor shift, remote control	
Powershift /Manufacture			Bosch	
Transmission model			M060S6 (6.748/0.731)	M070S6-D (8.064/1.000)
Gear ratio		1st	6.748	8.064
		2nd	4.112	5.443
		3rd	2.415	3.064
		4th	1.514	1.824
		5th	1.000	1.321
		6th	0.731	1.000
		Rev	6.748	7.354
Transmission oil	Gear oil		General: API GL-3 SAE80 Warm regions: API GL-3 SAE90 Tropical regions: API GL-4 SAE90	
	Quantity	dm^3 {qts, L}	6.7 {7.1, 6.7}	8.1 {8.6, 8.1}
Mass		kg {lb}	156 {344}	174 {383}

1. Transmission

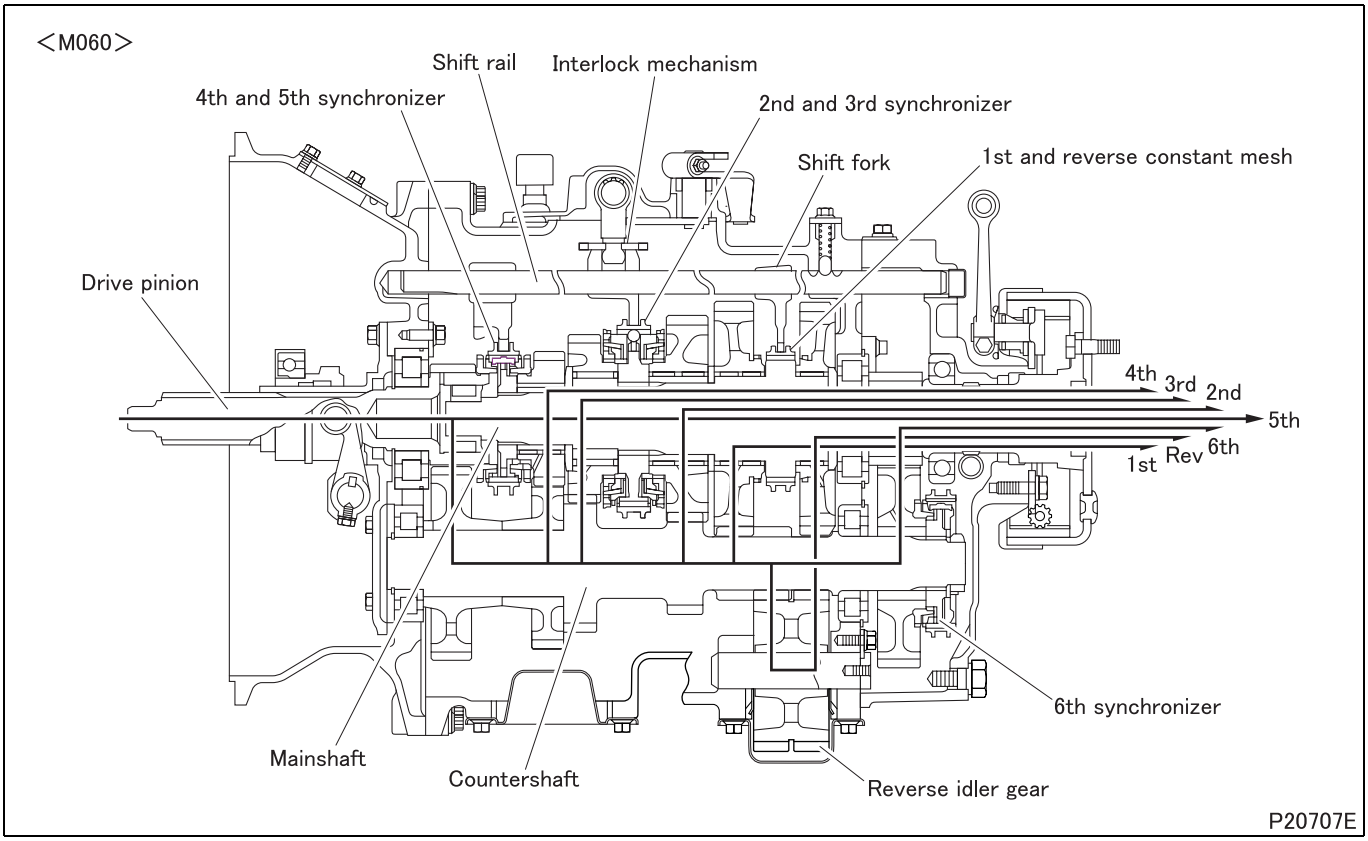

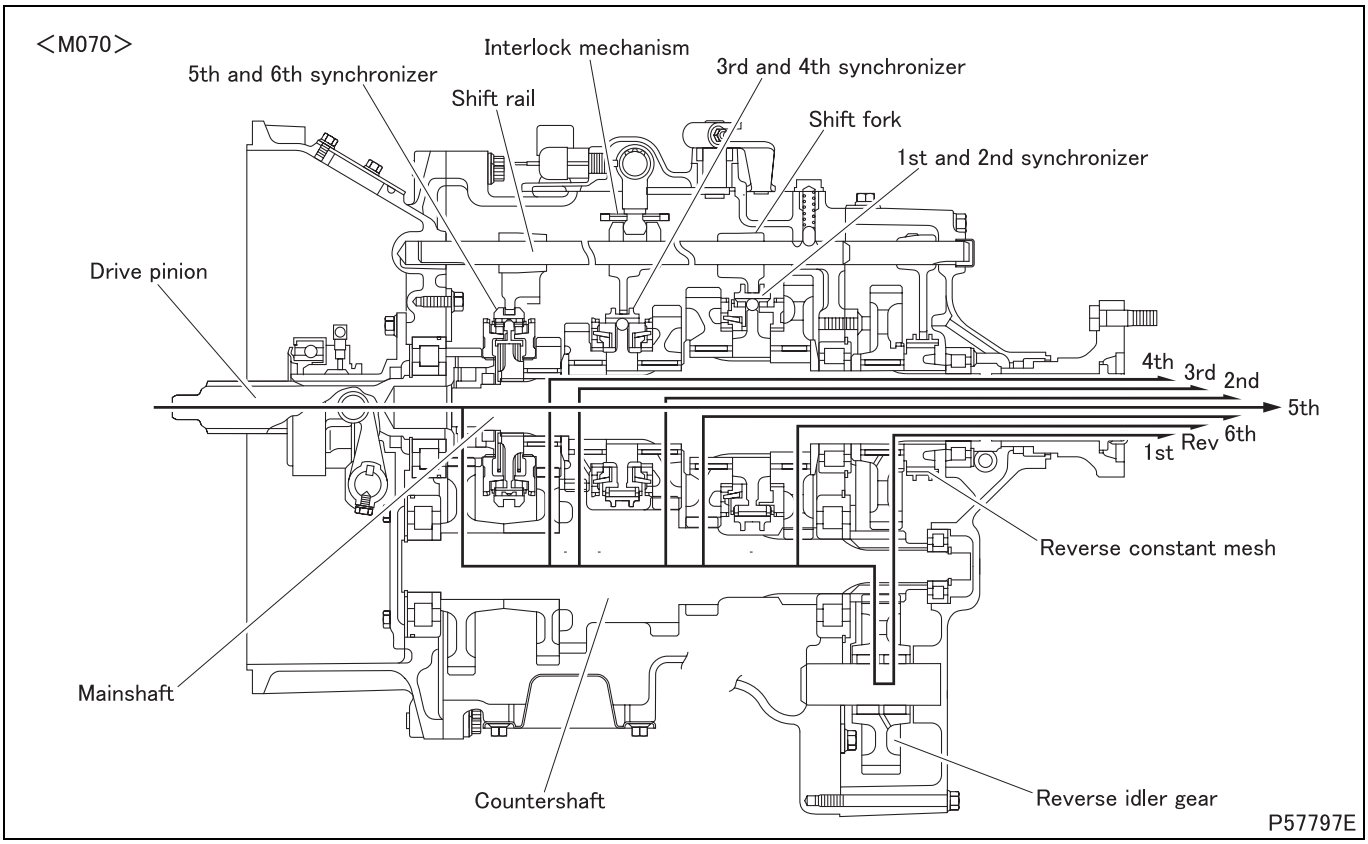

- The transmission uses an interlock mechanism to avoid double engagement.

2. Synchromesh Mechanism

- The synchromesh mechanism, when a shift change is made, synchronizes the rotation speed of the mainshaft, drive pinion and synchronizer hub that rotates integrally with the mainshaft with that of the gear to be shifted.
- The synchromesh mechanism is a Warner synchromesh type, and is used depending on the gear position as shown below:

Transmission model / Synchromesh type	M060	M070
Single cone type	4th, 5th, 6th	5th, 6th
Double cone type	2nd, 3rd	2nd, 3rd, 4th

2.1 Single cone type <M060>

The following descriptions are for 5th (drive pinion) side of 4th and 5th synchronizer.

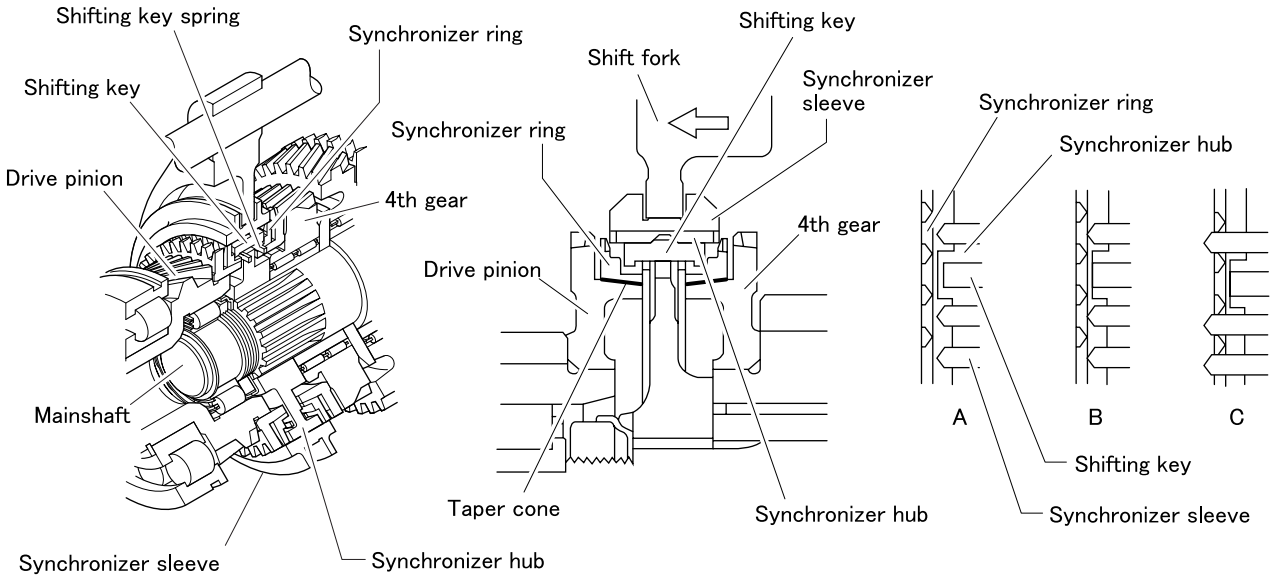

- The inside of the synchronizer hub engages the spline of the mainshaft and rotates with it. The outside of the synchronizer hub has a spline that engages the synchronizer sleeve and three keyways.
- Shifting keys are inserted into these keyways. When the gear shift is in neutral, the protrusions of the shifting key engages grooves in the synchronizer sleeve and are pressed against the inside of the synchronizer sleeve by shifting keys springs.
- Synchronizer rings are inserted into the respective taper cone of each gear.
- The outer splines of the synchronizer rings engage the synchronizer sleeve. On the synchronizer hub there are three keyways, in which the ends of the shifting key fit. These keyways are wider than the width of protrusions of the shifting keys.
- Synchronizer rings rotate relative to the synchronizer sleeve by the amount of play.
- When the gear shift is in neutral (Figure A), moving the shift fork in the direction of the arrow as illustrated, moves the synchronizer sleeve slightly to the drive pinion. At the same time, the shifting key, the central protrusion of which engages the synchronizer sleeve, moves to the drive pinion and presses the synchronizer ring against the taper cone of the drive pinion (Figure B).
- The taper cones of synchronizer rings, which act as cone clutches, generate friction torque and perform synchronous operation.
- The rotation speed of the synchronizer hub becomes gradually closer to that of the drive pinion gear due to the synchronous operation, and eventually they rotate at the same speed. This allows the synchronizer sleeve to move smoothly to engage the synchronizer hub and gear, completing the shift change (Figure C).

2.2 Single cone type <M070>

The following descriptions are for 6th (drive pinion) side of 5th and 6th synchronizer.

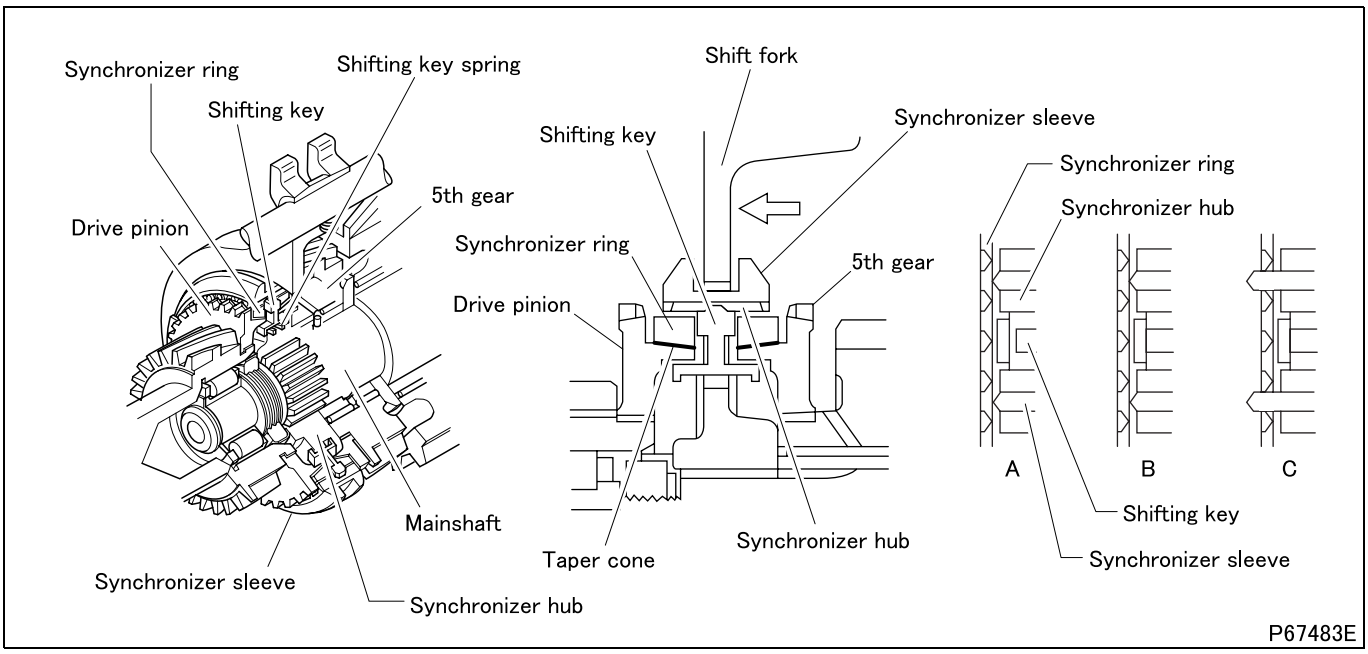

- The inside of the synchronizer hub engages the spline of the mainshaft and rotates with it. The outside of the synchronizer hub has a spline that engages the synchronizer sleeve and three keyways.
- Shifting keys are inserted into these keyways. When the gear shift is in neutral, the protrusions of the shifting key engages grooves in the synchronizer sleeve and are pressed against the inside of the synchronizer sleeve by shifting keys springs.
- Synchronizer rings are inserted into the respective taper cone of each gear.
- The outer splines of the synchronizer rings engage the synchronizer sleeve. On the synchronizer hub there are three keyways, in which the protrusions of synchronizer rings are inserted. These keyways are wider than the width of the protrusions of the synchronizer rings.
- Synchronizer rings rotate relative to the synchronizer sleeve by the amount of play.
- When the gear shift is in neutral (Figure A), moving the shift fork in the direction of the arrow as illustrated, moves the synchronizer sleeve slightly to the drive pinion. At the same time, the shifting key, the central protrusion of which engages the synchronizer sleeve, moves to the drive pinion and presses the synchronizer ring against the taper cone of the drive pinion (Figure B).
- The taper cones of synchronizer rings, which act as cone clutches, generate friction torque and perform synchronous operation.
- The rotation speed of the synchronizer hub becomes gradually closer to that of the drive pinion gear due to the synchronous operation, and eventually they rotate at the same speed. This allows the synchronizer sleeve to move smoothly to engage the synchronizer hub and gear, completing the shift change (Figure C).

2.3 Double cone type

The following descriptions are for 3rd side of 2nd and 3rd synchronizer <M060>.

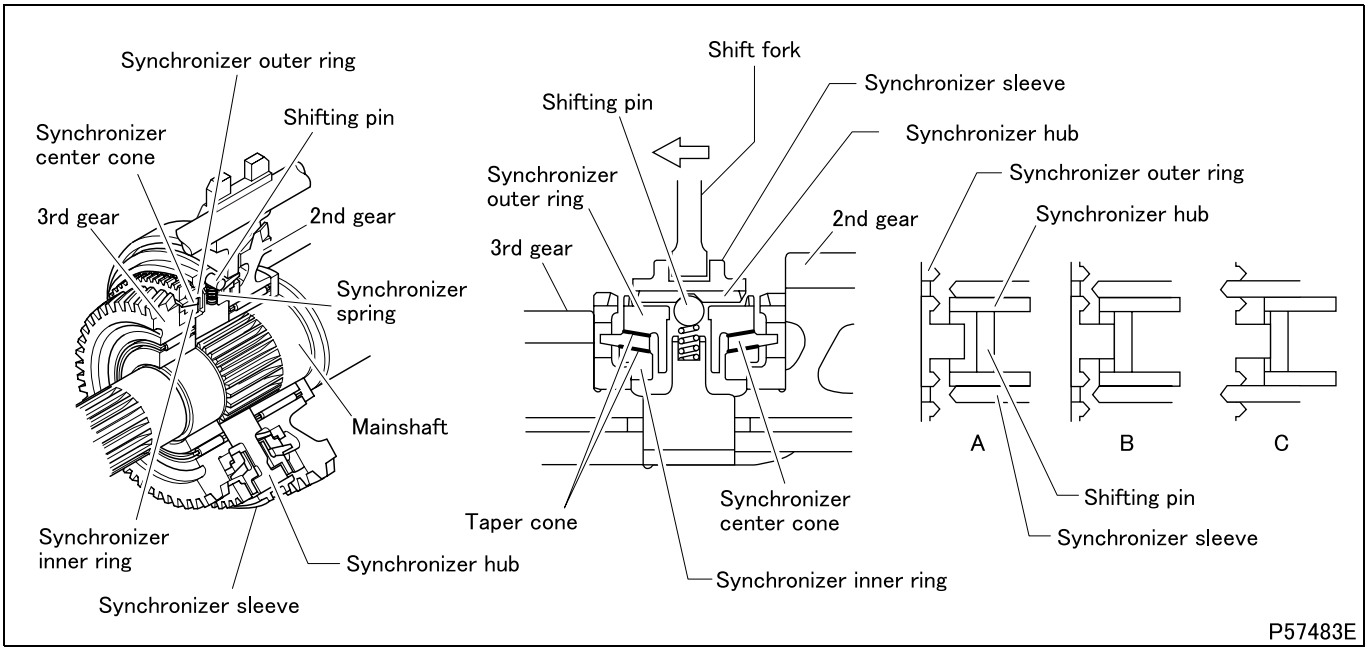

- The synchromesh structure and operation are basically the same as for the single cone type. The synchronizer ring is divided into three parts (synchronizer inner ring, synchronizer center cone and synchronizer outer ring) and the center cone (both the inside and outside surfaces are tapered) is sandwiched between the taper cones of the outer ring and inner ring to shorten the time required for synchronization with cone clutches at two locations.
- Six protrusions on the outside of the synchronizer center cone fit into corresponding gear holes. As in the taper cone of the single cone type, the center cone and the gear are installed as if integrated.
- The inside of the synchronizer hub engages the spline of the mainshaft and rotates with it. The outside of the synchronizer hub has a spline that engages the synchronizer sleeve and three keyways.
- Shifting pins are inserted into these keyways. When the gear shift is in neutral, the shifting pins engage grooves in the synchronizer sleeve and are pressed against the inside of the synchronizer sleeve by synchronizer springs.
- The synchronizer outer ring and synchronizer inner ring are inserted into synchronizer center cones, respectively.
- The outer spline of the synchronizer outer ring engages the synchronizer sleeve. On the synchronizer hub are three grooves in which protrusions of the synchronizer outer ring are inserted. These grooves are wider than the width of protrusions of the synchronizer outer ring.
- The synchronizer outer ring rotates relative to the synchronizer sleeve by the amount of play.
- When the gear shift is in neutral (Figure A), moving the shift fork in the direction of the arrow as illustrated moves the synchronizer sleeve slightly to the 3rd gear. At the same time, the shifting pin, which engages grooves in the synchronizer sleeve, moves to the 3rd gear and presses the synchronizer outer ring against the taper cone of the synchronizer center cone, and in addition, presses the center cone against the synchronizer inner ring (Figure B).
- The taper cones of synchronizer rings, which act as cone clutches, generate friction torque and perform synchronous operation.
- The rotation speed of the synchronizer hub becomes gradually closer to that of the gear of the 3rd gear due to the synchronous operation, and eventually they rotate at the same speed. This allows the synchronizer sleeve to move smoothly to engage the synchronizer hub and gear, completing the shift change (Figure C).

3. Power Shift

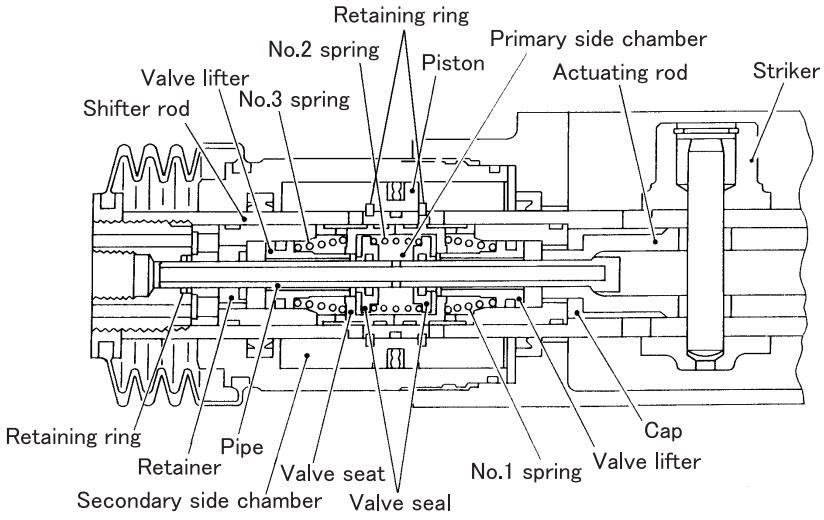

3.1 When activated

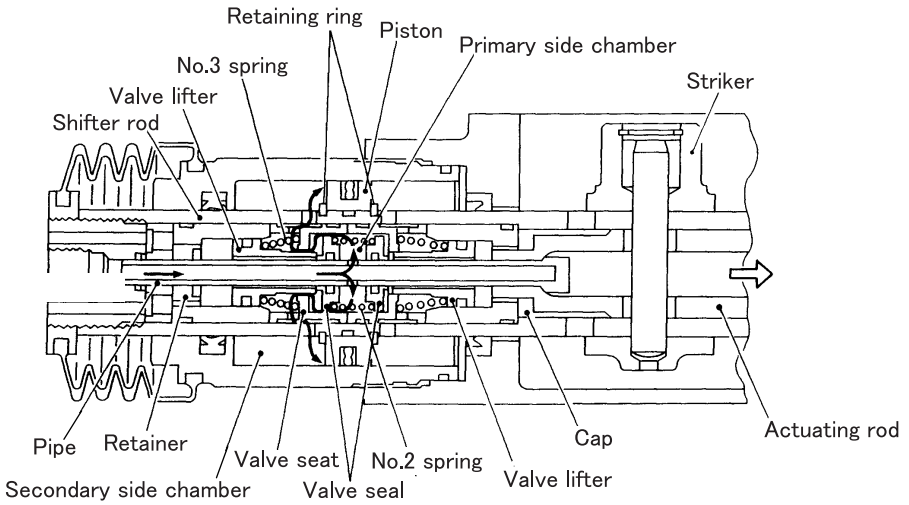

- When actuating rod is moved in the direction of the arrow as illustrated, shifter rod and the actuating rod move relative to this movement. Valve lifter presses No.3 spring against valve seal to overcome the combined repercussive forces of the compressed air acting on the valve seal and No.2 spring. The valve seal separates from valve seat, and the compressed air supplied to primary side chamber is let into secondary side chamber via the opening between the valve seat and the valve seal. The compressed air flows into the cylinder through the hole and groove of the valve seal and the vent hole of shifter rod to put pressure on piston, generating output.
- The output given to piston is transmitted to shifter rod via retaining ring to assist striker which is fixed on the shifter rod. This operates the shift fork on the transmission side, shifting the gears. Thus, gear shifting is completed.
- When the power shift operates in the direction of the arrow as illustrated, the input from the gear shift lever is transmitted by actuating rod via cap, pipe, and retainer fixed on retaining ring. For operation in the opposite direction, all operations are the same in principle as in the direction of the arrow as illustrated, except that the end of the cap, fixed on the end of the actuating rod, presses valve lifter directly.

3.2 When releasing

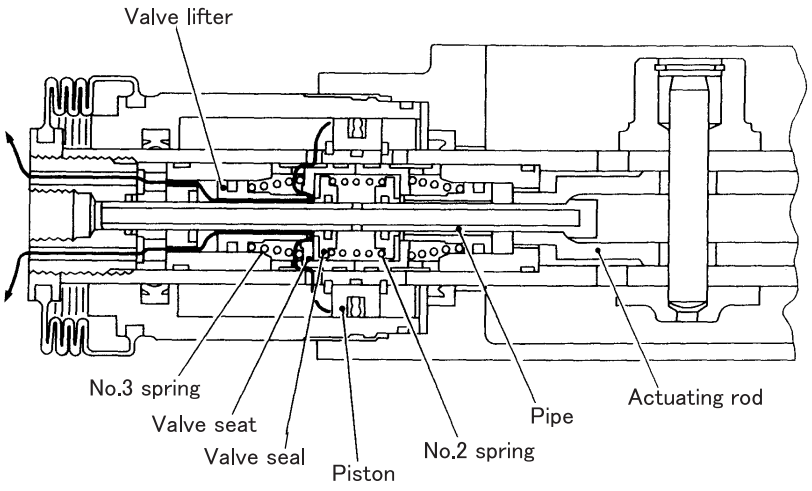

- When gear shifting is completed and the input is released, actuating rod is returned to the valve center position (the condition before operation) by the combined repercussive forces of the compressed air of valve lifter, the steel ball, and valve springs.
  As the valve lifter returns, valve seal seats against valve seat, cutting off the flow of compressed air from primary side chamber to secondary side chamber. As the input rod returns, clearance is generated between the valve lifter and the valve seal.
- The compressed air in the cylinder of secondary side chamber is discharged into the atmosphere through the clearance between valve lifter and pipe. This eliminates the pressure difference between the chambers on both sides of piston, so output is lost.

3.3 When not operating (non-boosting)

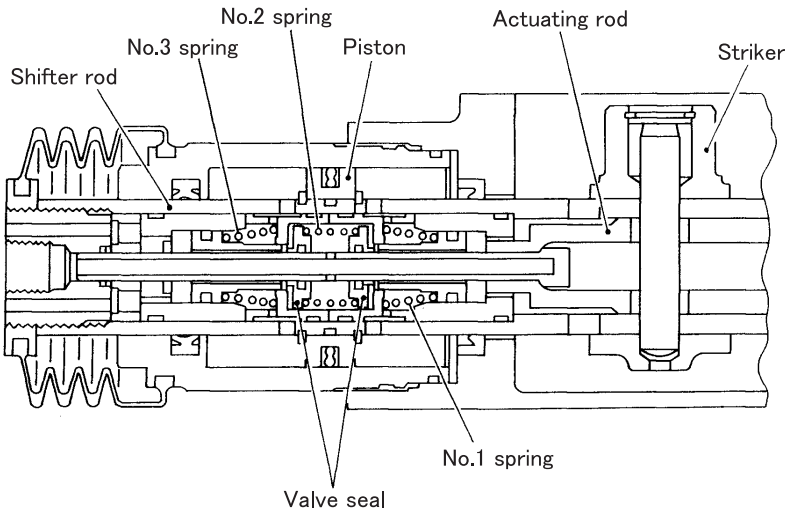

- To operate the power shift, that is, to open the valve and let the compressed air into the output chamber, actuating rod on the input side and shifter rod on the output side must generate relative disengagement.
- When the operating force is transmitted from the gear shift lever to actuating rod, and the resistance on the transmission side is less than the combined repercussive forces working on the relative disengagement of the input side and output side (repercussive forces of No.1 to 3 springs; pressure on valve seal; and sliding resistance on various parts), the mechanism, from the actuating rod to striker, is integrated and does not generate relative disengagement. Therefore, the valve does not open, and without boosting operation, piston moves in the cylinder to shift gears.

4. Interlock Mechanism

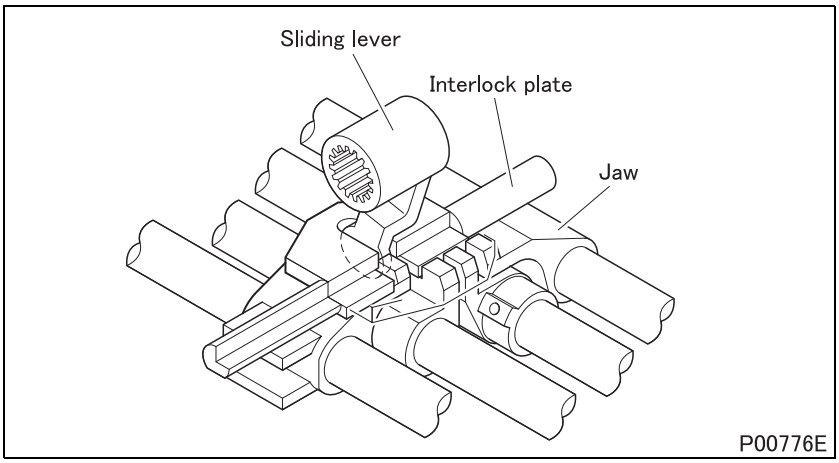

- The interlock mechanism is a mechanism to prevent double engagement of gears.
- The rail beneath the interlock plate locks jaws except jaws shifted by gear shift sliding lever, preventing double engagement of gears.

Possible causes / Symptoms		Gears slip out of engagement	Gears hard to engage	Noise when engine is idling	Noise when cruising	Noise when changing gear	Reference Gr
Transmission body faulty	Mainshaft rear lock nut loose	O	O				
	Mainshaft thrust washer worn	O	O				
	Mainshaft bearings worn or damaged	O	O				
	Mainshaft pilot bearing worn or damaged			O	O		
	Drive pinion bearing worn or damaged			O			
	Countershaft bearings worn or damaged			O			
	Needle bearings of gears worn or damaged			O	O		
	Mainshaft and countershaft bearing bearings worn or damaged				O		
	Mainshaft and countershaft gears backlash excessive				O		
	Spline of gears worn					O	
	Gears damaged				O		
	Transmission oil insufficient				O		
Control mechanisms faulty	Control cable adjustment faulty		O				
	Control cable routing inadequate		O				
	Control cable length inadequate		O				
	Bushings worn	O	O				
	Interlock pin and groove of shift rail worn	O					
	Poppet spring of shift rail fatigued or broken	O					
	Shift rail sliding area worn		O				
	Shift fork jaws worn		O				
	Shift fork broken		O				

Possible causes \ Symptoms			Gears slip out of engagement	Gears hard to engage	Noise when engine is idling	Noise when cruising	Noise when changing gear	Reference Gr
Power shift malfunctioning	Air compressor faulty			O				Gr35A
	Air leakage			O				
	Power shift faulty			O				
Clutch faulty	Clutch disengagement faulty			O			O	Gr21
	Clutch pedal play faulty			O				
Synchronizer faulty	Single-cone type	Wear of contacting surface between synchronizer ring and tapered cone section of the gear		O			O	
	Double-cone type	Wear of contacting surface between synchronizer inner and outer rings and the center cone		O			O	
	Synchronizer ring and synchronizer sleeve spline worn		O					
	Wear on chamfered section of synchronizer ring splines						O	
	Shifting key and shifting pin worn						O	
	Shifting key spring and synchronizer spring deteriorated or damaged						O	
	Synchronizer sleeve worn or damaged					O	O	

ON-VEHICLE INSPECTION AND ADJUSTMENT

1. Inspection of Transmission Oil Leakage

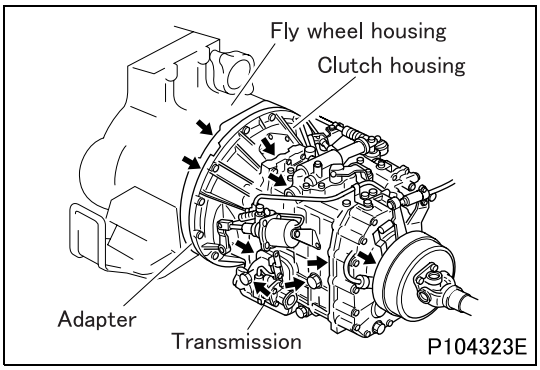

1.1 Inspection of oil leakage at each part of transmission body

- Check the oil leakage at each part of transmission body in visual.
  If the oil leakage is found, replace the defective part.

1.2 Inspection of oil leakage around transmission mounting part

- Check there is not oil stain on flywheel housing, spacer and transmission mounting part caused by oil leakage from engine.
- If there is the oil stain, remove the transmission and clean the mounting surface of clutch housing and flywheel housing using brake cleaner etc. after repairing oil leakage part. Because the oil stain may loosen the transmission mounting bolts. (See “REMOVAL AND INSTALLATION OF TRANSMISSION”.)

2. Inspection of Looseness in Transmission Mounting Bolts

Tightening torque (Unit: N·m {ft.lbs, kgf·m})

Mark	Parts to be tightened	Tightening torque	Remarks
–	Bolt or nut (transmission mounting)	40.2 {30, 4.1}	–

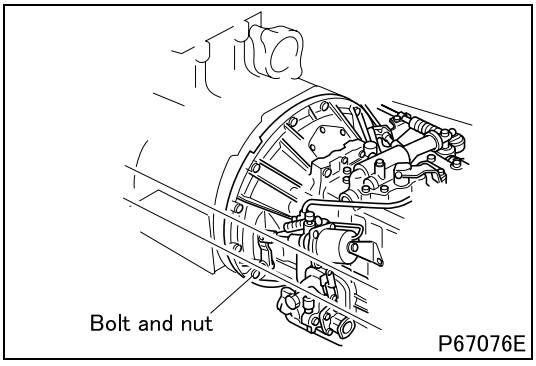

- Check the transmission mounting bolts and nuts for looseness.
- Retighten any loose bolt or nut to the specified torque.

3. Inspection of Play and Looseness in Companion Flange

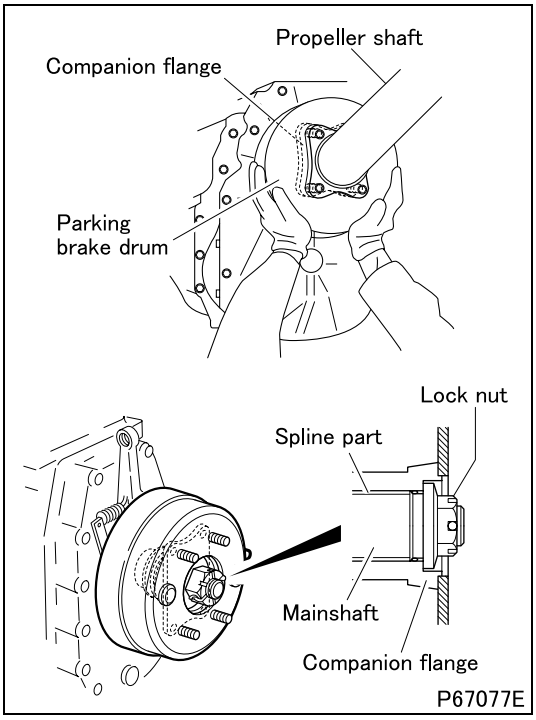

- Check the propeller shaft mounting bolts for looseness. (See Gr25.)
- Move the parking brake drum or companion flange in axial and vertical directions to check for excessive play between the companion flange and mainshaft.
- If excessive play is detected, remove the propeller shaft, then check the lock nut for looseness and the splines on companion flange and mainshaft for abnormalities. If any part is found defective, replace the part. (See the “EXTENSION HOUSING” section.)

4. Inspection and Replacement of Transmission Oil

WARNING ⚠

- **Temperature of transmission oil is high immediately after driving. Perform work when oil is cold.**

Tightening torque (Unit: N·m {ft.lbs, kgf·m})

Mark	Parts to be tightened	Tightening torque	Remarks
–	Inspection plug	68.6 ± 14.7 {51 ± 11, 7.0 ± 1.5}	–
	Drain plug		

Lubricant and/or sealant

Mark	Points of application		Specified lubricant and/or sealant	Quantity
–	Thread area of inspection plug		ThreeBond 1105	As required
	Thread area of drain plug			
–	Transmission case and extension housing	M060	Gear oil General: API GL-3 SAE80 Warm regions: API GL-3 SAE90 Tropical regions: API GL-4 SAE90	6.7 dm^3 {7.1 qts}
		M070		8.1 dm^3 {8.6 qts}

For a model with transmission PTO, the quantity is increased by 0.5 dm^3 {0.5 qts}.

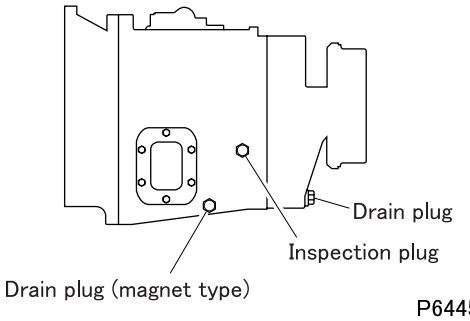

[Inspection]

(1) Inspection of oil quantity

- Remove the inspection plug, and check that transmission oil is filled up to the neck.
- If oil is not sufficient, fill transmission oil from the inspection plug hole up to the neck.
- After filling, apply sealant to the inspection plug and tighten it to the specified torque.

(2) Inspection of oil quality and inclusions

- When draining transmission oil, check for oil quality, metal chips and metal powder.
- The following conditions are indicative of internal troubles; hence overhaul is required.
  - Viscosity is too high
  - A foreign odor
  - Too many metal particles

[Replacement]

- Remove the drain plug to drain transmission oil. Drainage can be made quickly with the inspection plug removed.
- After draining transmission oil, apply sealant to the drain plug and tighten it to the specified torque. Magnet type drain plugs should be cleaned before installation.
- Fill transmission oil of the specified quantity from the inspection plug hole.
- After filling, check that oil is filled up to the neck of the inspection plug hole. If oil is not sufficient, replenish it.
- After completing work, apply sealant to the inspection plug and tighten it to the specified torque.

REMOVAL AND INSTALLATION OF TRANSMISSION

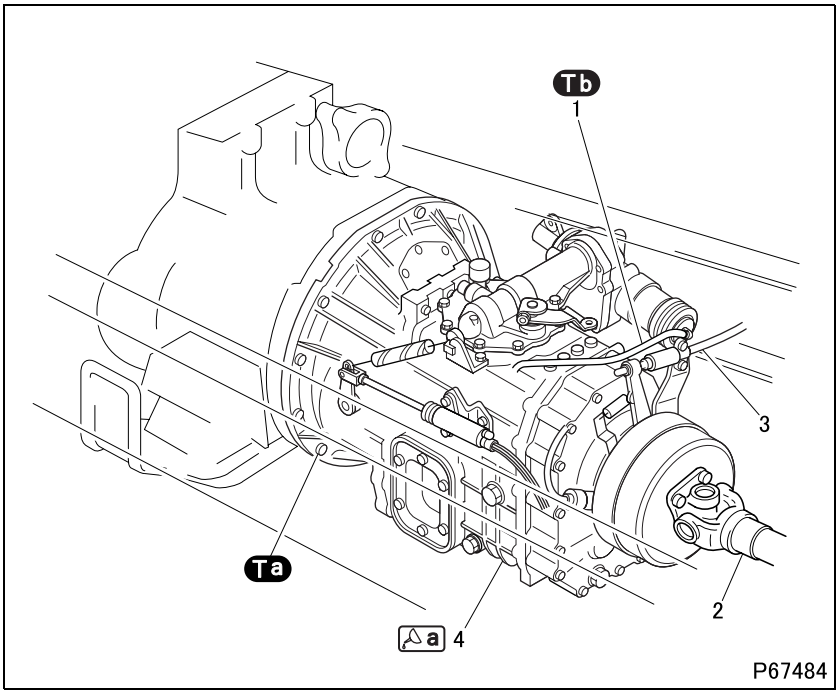

● **Disassembly sequence**

1 Air tube
2 Propeller shaft (See Gr25.)
3 Parking brake cable <M060> (See Gr36A.)
4 Transmission

● **Assembly sequence**

Follow the removal sequence in reverse.

Tightening torque (Unit: N·m {ft.lbs, kgf·m})

Mark	Parts to be tightened	Tightening torque	Remarks
Ta	Nut or bolt (transmission mounting)	40.2 {30, 4.1}	–
Tb	Air tube	20 to 28 {15 to 21, 2.0 to 2.9}	–

Lubricant and/or sealant

Mark	Points of application	Specified lubricant and/or sealant	Quantity
a	Spline of drive pinion	Molybdenum disulfide grease [NLGI No.2 (Li soap)]	As required

◆Removal procedure◆

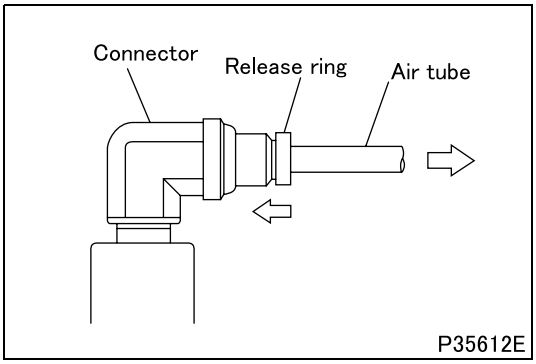

■ **Removal: Air tubes <M060>**

- Pressing the release ring on the tip of the snap-on hose connector against the connector, pull off the air tube.

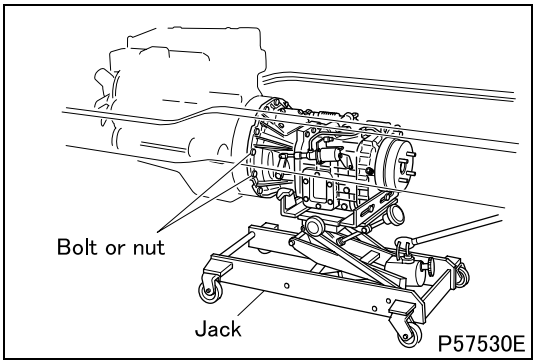

■ **Removal: Transmission**

- Support the transmission on a transmission jack and remove transmission mounting bolts or nuts.

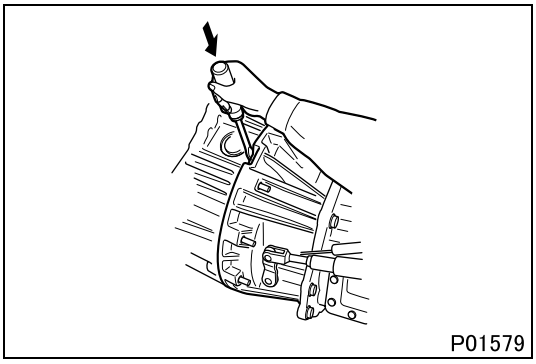

- Insert a screwdriver into the three removal grooves and remove the transmission from the engine.
- Move the transmission backward slowly until the spline of the drive pinion is detached from the clutch.

CAUTION ⚠

- **If the transmission is shaken strongly, there is a risk of damage to the spline that couples the drive pinion with the clutch.**

◆Installation procedure◆

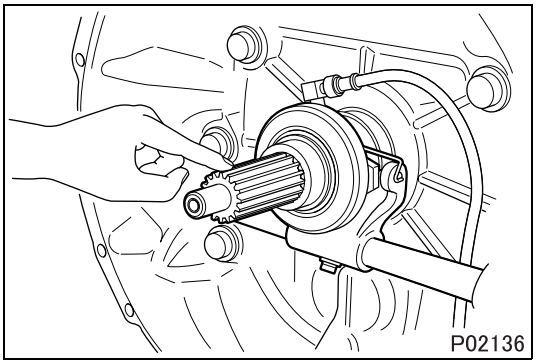

■ **Installation: Transmission**

- Check the spline of the drive pinion for rust.
- If rust is found, remove it using a wire brush.
- Rub grease evenly onto the clutch disc sliding surface of the drive pinion using your hand.

CAUTION ⚠

- **Make sure that you apply only the necessary amount of grease because too much grease can drip and cause clutch slip.**

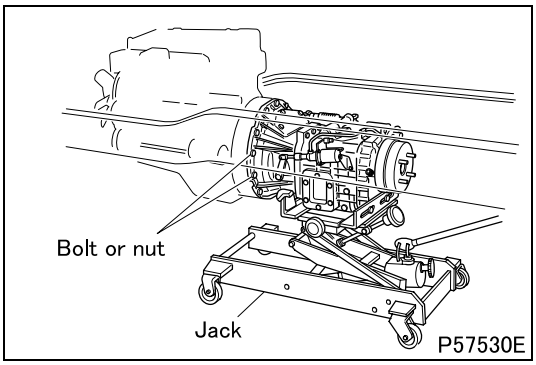

- While supporting the transmission on a transmission jack, insert the drive pinion end into pilot bearing of the flywheel. In so doing, take care of the spline of drive pinion.
- Tighten transmission mounting bolts or nuts to the specified torque.

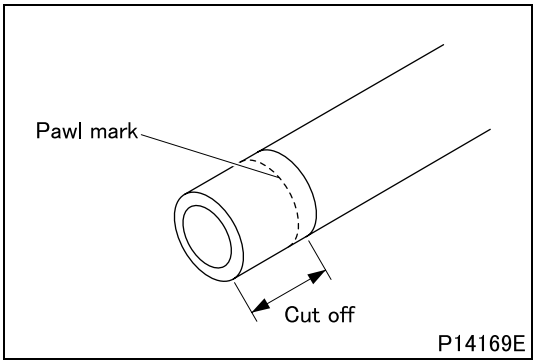

■ **Installation: Air tubes <M060>**

- When the air tube is disconnected from the snap-on tube connector, a “pawl mark” made by the connector is left on the peripheral surface of the tube end. When the disconnected tube is reused, to avoid possible harm of this mark, cut off the tube end portion at the mark. At the same time, check that the portion of the tube that will go into the connector is free of foreign matter (residual tape, etc.) and any damage on the surface. Cut off damaged portion from the tube.

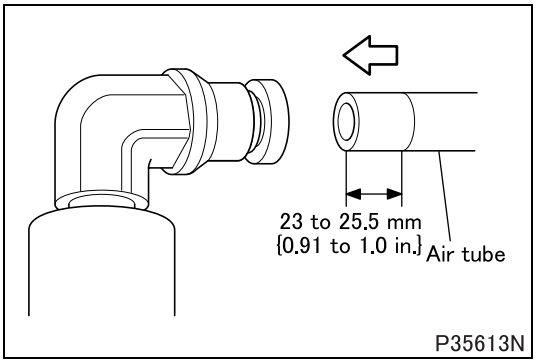

- Thoroughly remove dirt and grease, if any, from inside the snap-on connector.
- Fit the air tube firmly into the snap-on connector.
- The insertion depth of the air tube into the connector is as shown. If the tube is not inserted to this depth, its connection is incomplete.

M E M O

GEAR SHIFTER UPPER AND INTERLOCK PLATE

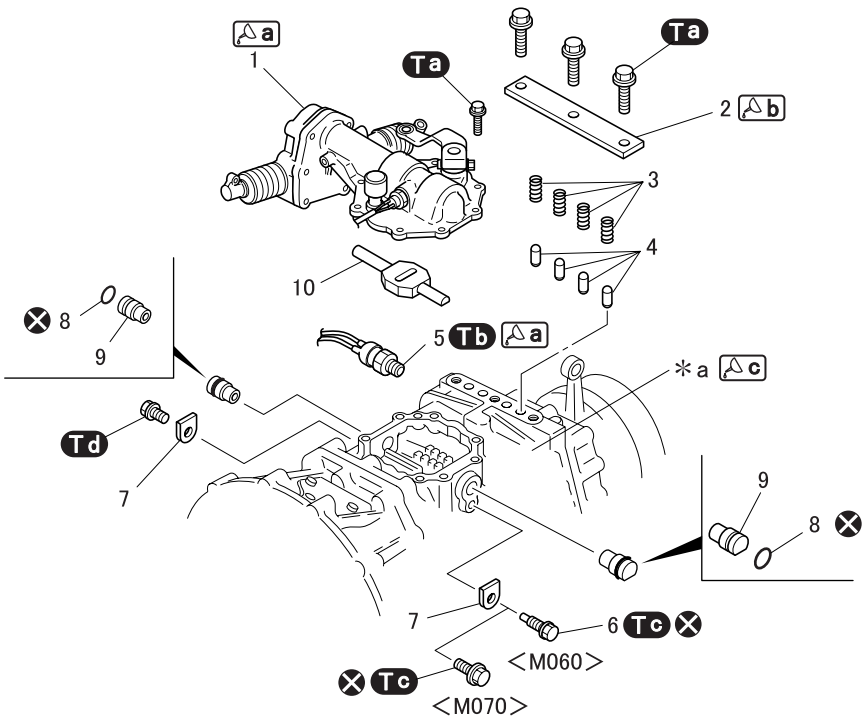

● **Removal sequence**

1 Gear shifter upper (See later section.)
2 Poppet spring plate
3 Poppet spring
4 Interlock pin
5 Backup lamp switch
6 Jaw set bolt <M060>
7 Lock plate
8 O-ring
9 Interlock plate bushing
10 Interlock plate

***a**: Transmission body
⊗: Non-reusable parts

● **Installation sequence**

Follow the removal sequence in reverse.

Service standards (Unit: mm {in.})

Location	Maintenance item	Standard value	Limit	Remedy
3	Poppet spring installed load (installed length 30.2 {1.19})	115 ± 11.5 N {26 ± 2.6 lbs, 12 ± 1.2 kgf}	92 N {21 lbs, 9.6 kgf}	Replace
9, 10	Clearance between interlock plate axis and bushing	0.07 to 0.15 {0.0028 to 0.0059}	0.3 {0.012}	Replace

Tightening torque (Unit: N·m {ft.lbs, kgf·m})

Mark	Parts to be tightened	Tightening torque	Remarks
Ta	Bolt (gear shifter upper mounting)	22.6 {17, 2.3}	–
	Bolt (poppet spring plate mounting)		
Tb	Backup lamp switch	49 {36, 5.0}	–
Tc	Jaw set bolt	133 {98, 13.6}	–
	Bolt (lock plate mounting)		
Td	Bolt (lock plate mounting)	40.2 {30, 4.1}	–

Lubricant and/or sealant

Mark	Points of application	Specified lubricant and/or sealant	Quantity
a	Mating surface of gear shifter upper and transmission case	ThreeBond 1104	As required
	Thread area of backup lamp		
b	Mating surface of poppet spring plate and transmission case	ThreeBond 1215	As required
c	Transmission case mounting hole for interlock plate bushing	Wheel bearing grease [NLGI No.2 (Li soap)]	Approx. 5 g {0.18 oz}

GEAR SHIFTER UPPER AND INTERLOCK PLATE

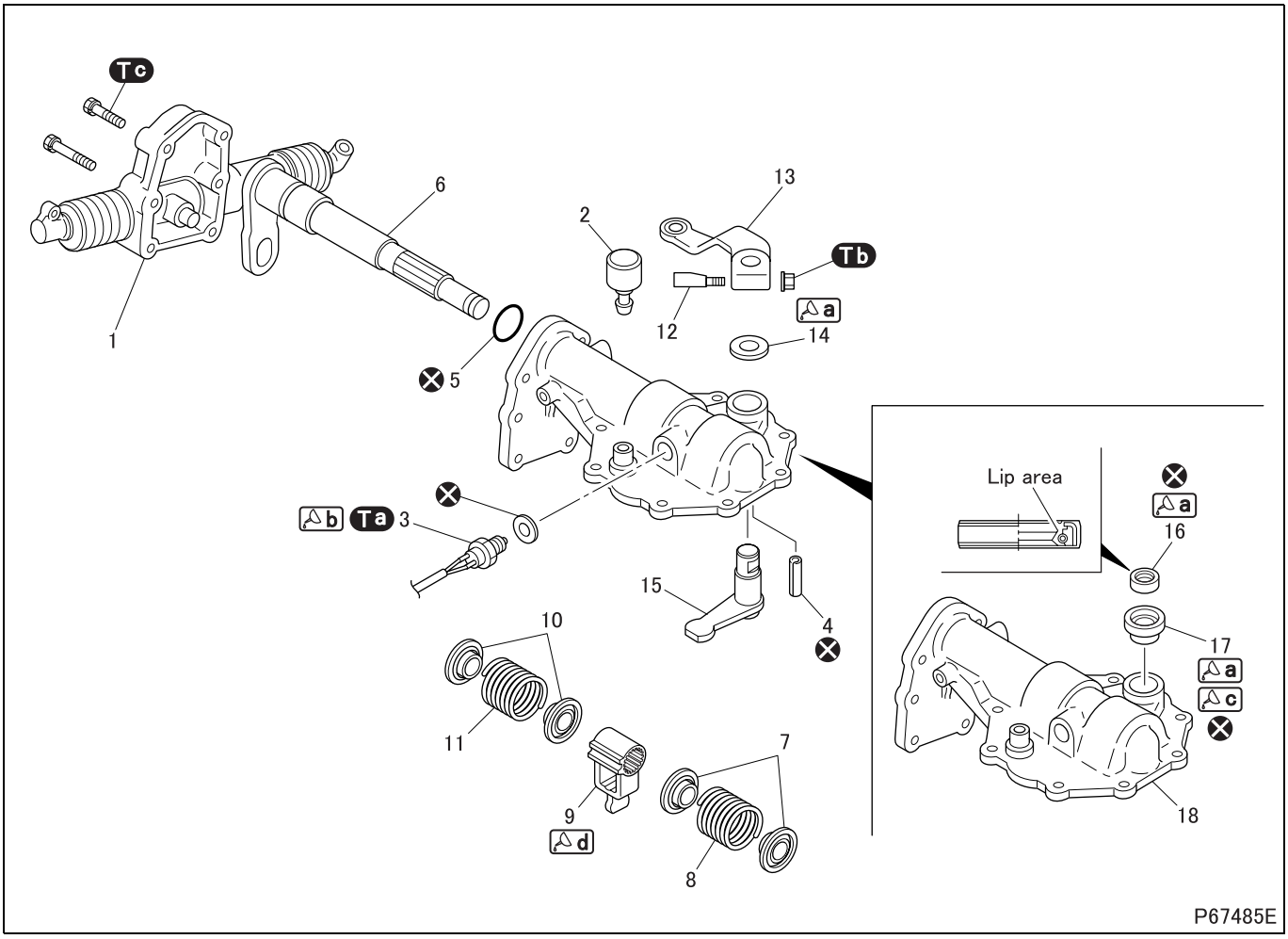

● **Disassembly sequence**

1 Power shift (See power shift.)
2 Air breather
3 Transmission neutral switch
4 Spring pin
5 O-ring
6 Gear shift lever
7 Spring retainer
8 Return spring A
9 Gear shift sliding lever
10 Spring retainer
11 Return spring B
12 Lock pin
13 Gear select lever
14 Washer
15 Gear select lever
16 Oil seal
17 Bushing
18 Select lever case

⊗: Non-reusable parts

NOTE

- **Do not remove bushing except for replacement.**

● **Assembly sequence**

Follow the disassembly sequence in reverse.

- If the power shift is reassembled, check that the gear select lever can stroke fully after reassembly.

Service standards (Unit: mm {in.})

Location	Maintenance item	Standard value	Limit	Remedy
8	Return spring installed load (installed length 23.6 {0.93})	92 ± 9.2 N {21 ± 2.1 lbs, 9.4 ± 0.94 kgf}	78 N {18 lbs, 8.0 kgf}	Replace
11	Return spring installed load (installed length 27.6 {1.09})	94 ± 9.4 N {21 ± 2.1 lbs, 9.6 ± 0.96 kgf}	80 N {18 lbs, 8.2 kgf}	Replace

Tightening torque (Unit: N·m {ft.lbs, kgf·m})

Mark	Parts to be tightened	Tightening torque	Remarks
Ta	Transmission neutral switch	34.3 to 39.2 {25 to 29, 3.5 to 4.0}	–
Tb	Nut (lock pin mounting)	16.7 {12, 1.7}	–
Tc	Bolt (power shift mounting)	40.2 {30, 4.1}	–

Lubricant and/or sealant

Mark	Points of application		Specified lubricant and/or sealant	Quantity
a	Gear shift lever O-ring mounting groove		Wheel bearing grease [NLGI No.2 (Li soap)]	As required
	Sliding area of washer			
	Lip area of oil seal			
	Sliding area of bushing inner surface and gear select lever			
b	Thread area of transmission neutral switch		ThreeBond 1104J	As required
c	Contact surface of busing outer surface and select lever case		ThreeBond 1215	As required
d	Gear shift slide lever	Splines	Molykote BR2 plus	As required
		Sliding section to gear select lever		

Special tools (Unit: mm)

Mark	Tool name and shape	Part No.	Application
a	Spring pin puller A: M12 × 1.25 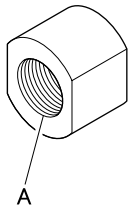 P02399	MH062445	Removal of spring pin
b	Reverse shaft puller A: M12 × 1.25 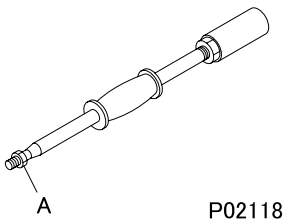 P02118	03726-82000	

GEAR SHIFTER UPPER AND INTERLOCK PLATE

◆**Removal procedure**◆

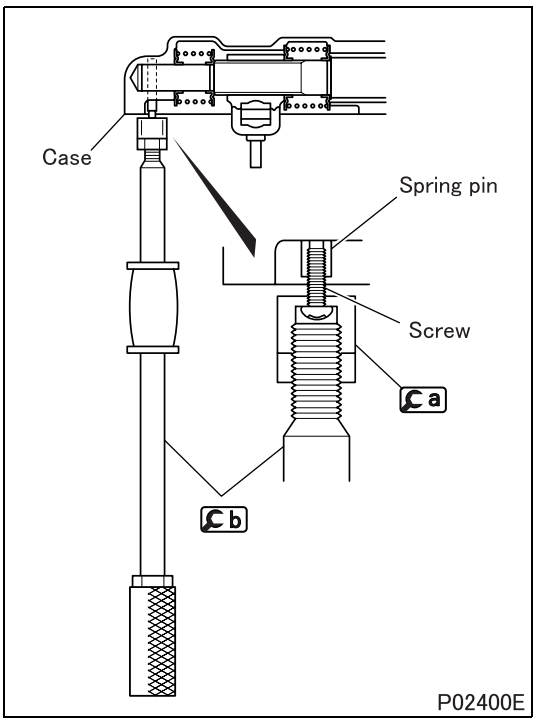

■ **Removal: Spring pin**

- Tap the spring pin using an M4 tap.
- Insert a with an M4 screw of appropriate length into the spring pin, and remove the spring pin using b.

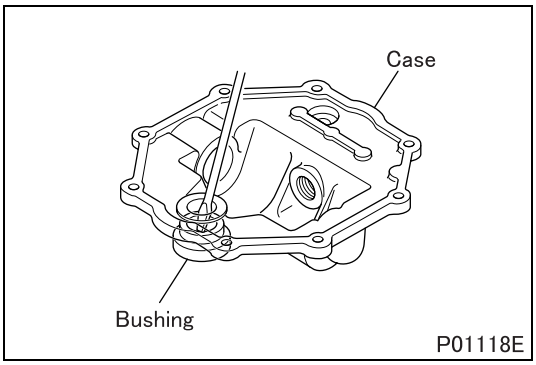

■ **Removal: Bushing**

- Remove the bushing with a screwdriver while taking care not to damage the gear select lever case.

◆Installation procedure◆

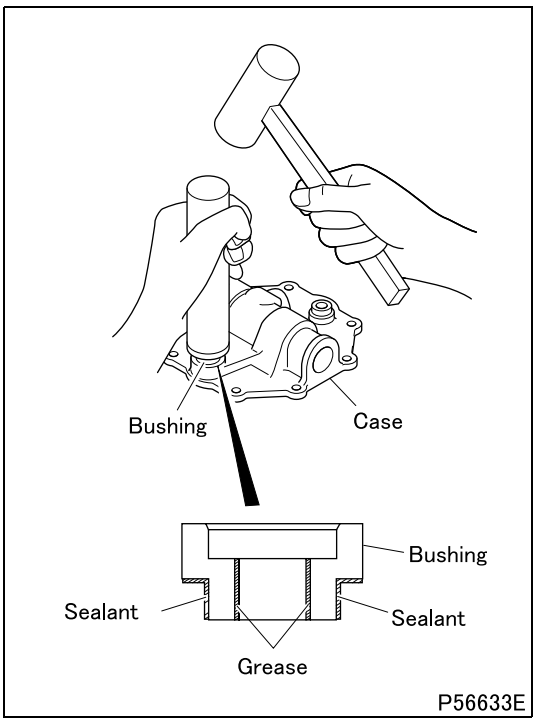

■ **Installation: Bushing**

- Clean the bushing and bushing mounting surface of the select lever case.
- Apply grease to the inner surface of the bushing and sealant to its outer surface.

CAUTION ⚠

- **Do not allow sealant to adhere to the inner surface of the bushing as it may cause malfunction of the gear select lever.**

- Mount the bushing by evenly tapping it using a round bar of outer diameter of approximately 40 mm {1.57 in.}.

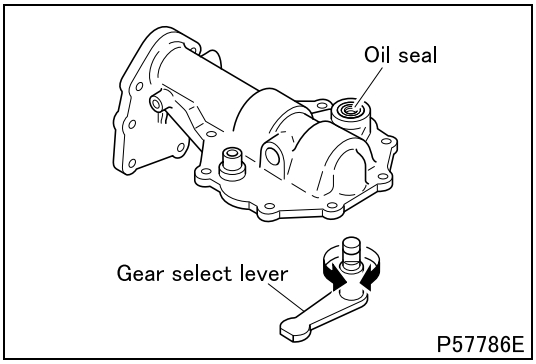

■ **Installation: Gear select lever**

- Install the gear select lever while turning so that the oil seal is not damaged in the lip.

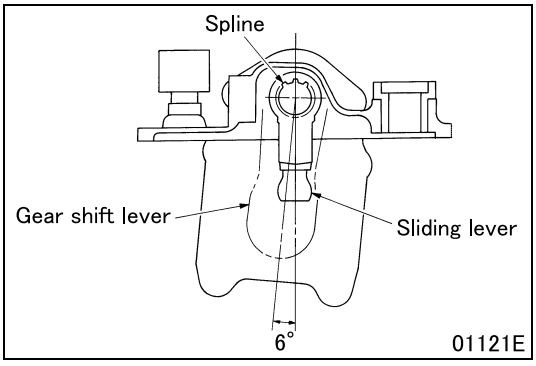

■ **Installation: Gear shift lever**

- Install the gear shift lever aligning with the spline so that it is placed at the illustrated angle to the gear shift sliding lever.

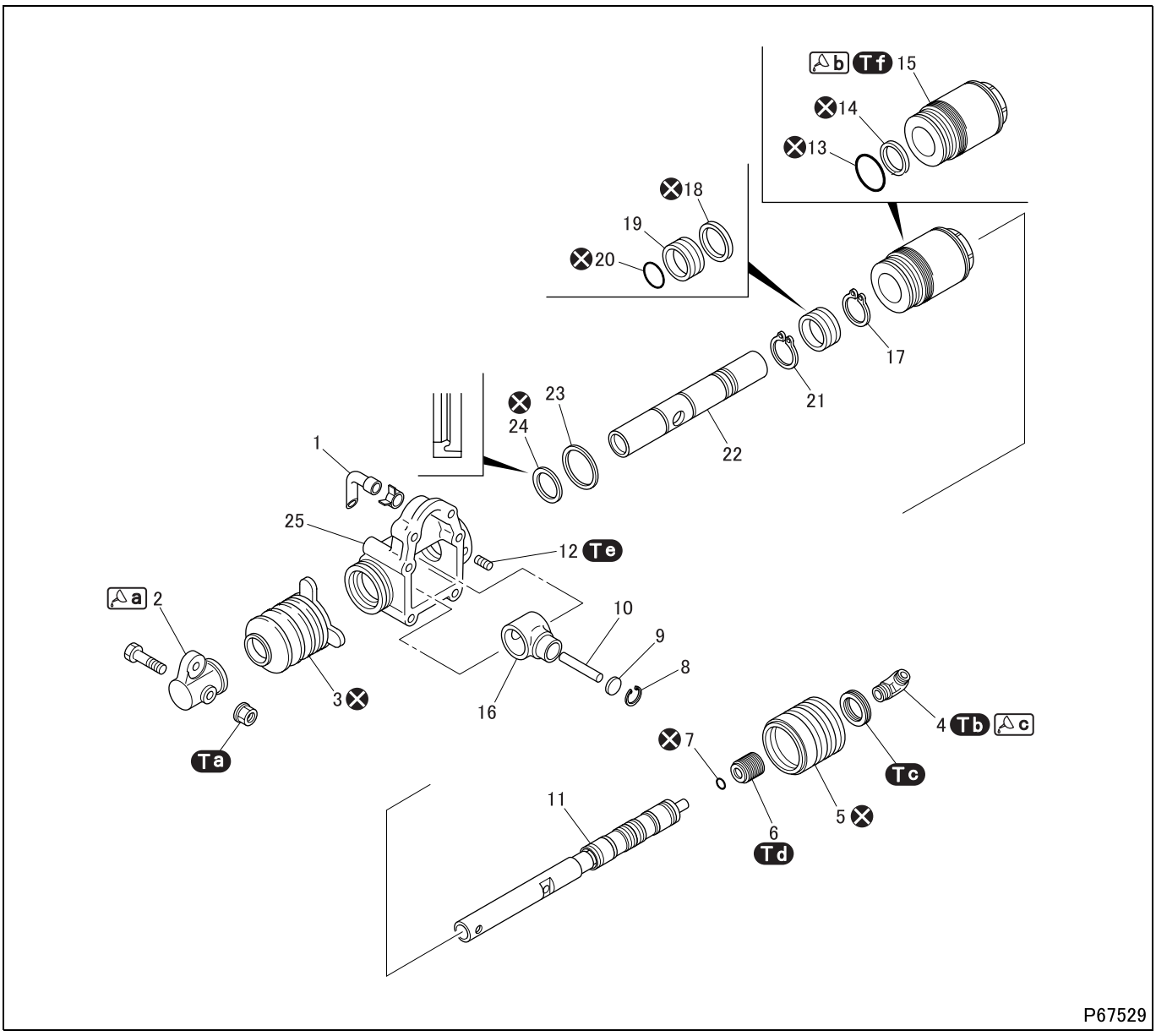

● **Disassembly sequence**

1 Hose
2 Lever
3 Boot
4 Connector
5 Boot
6 Connector
7 O-ring
8 Retaining ring
9 Plate
10 Straight pin
11 Valve (See later section.)
12 Set screw
13 O-ring
14 Packing
15 Cylinder
16 Striker
17 Retaining ring
18 Piston packing
19 Piston
20 O-ring
21 Retaining ring
22 Shifter rod
23 Plate
24 Cup packing
25 Housing

⊗: Non-reusable parts

● **Assembly sequence**

Follow the disassembly sequence in reverse.

Repair kit: Power shift kit

Service standards (Unit: mm {in.})

Location	Maintenance item			Standard value	Limit	Remedy
–	Power shift	Air-tightness (decrease of pressure 15 seconds later after application of pressure (735 kPa {105 psi, 7.5 kgf/cm^2}))	When not operating	–	9.8 kPa {1.4 psi, 0.1 kgf/cm^2}	Replace
			When operating	–	49 kPa {7.1 psi, 0.5 kgf/cm^2}	
	Sliding resistance in shifting direction			38.2 ± 3.8 N {8.6 ± 0.9 lbs, 3.9 ± 0.4 kgf} or less	–	

Tightening torque (Unit: N·m {ft.lbs, kgf·m})

Mark	Parts to be tightened	Tightening torque	Remarks
Ta	Nut (lever mounting)	23.5 to 26.6 {17 to 20, 2.4 to 2.7}	–
Tb	Connector	13.7 to 49.0 {10 to 36, 1.4 to 5.0}	–
Tc	Nut (connector mounting)	59 to 69 {44 to 51, 6 to 7}	–
Td	Connector	7.8 to 11.8 {5.8 to 8.7, 0.8 to 1.2}	–
Te	Set screw	2.0 to 3.4 {1.5 to 2.5, 0.2 to 0.35}	–
Tf	Cylinder	78.4 to 98.0 {58 to 72, 8 to 10}	–

Lubricant and/or sealant

Mark	Points of application	Specified lubricant and/or sealant	Quantity
a	Inner periphery of lever	Multipurpose grease [NLGI No.2 (Li soap)]	As required
	All friction surfaces		
b	Thread area of cylinder	Loctite 242 or ThreeBond 1401B	As required
c	Thread area of connector	ThreeBond 1110B	As required

Special tools (Unit: mm {in.})

Mark	Tool name and shape	Part No.	Application
a	Connector 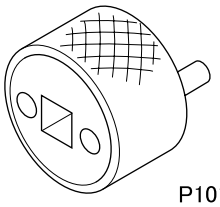 P101236	ME528898	Removal and installation of connector
b	Sleeve A: ϕ29 {1.14}, B: ϕ27 {1.06}, C: 35 {1.38} 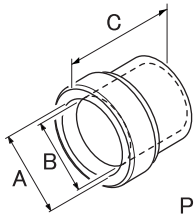 P101237	ME528897	Insertion of valve
c	Socket wrench A: 46 {1.81} 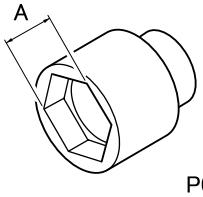 P02030	ME528895	Removal and installation of cylinder

◆Inspection before removal◆

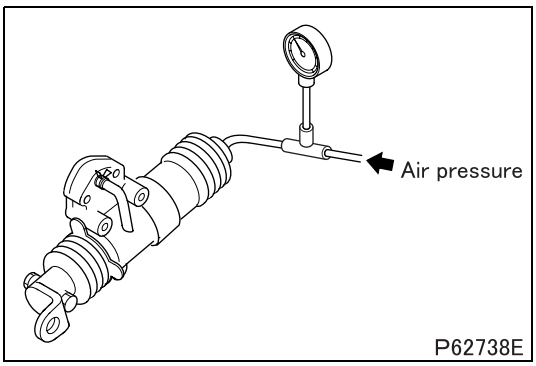

■ **Inspection: Power shift**

(1) Inspection of air tightness

- Apply the specified pressure from the connector, and check air tightness when the power shift is not operating (valve in neutral position) and when it is operating (in both directions of pushing and pulling the valve).
- If the measured value exceeds the limit, replace defective parts.

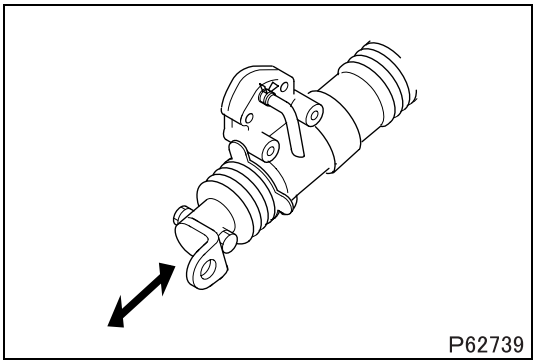

(2) Sliding resistance in shifting direction

- Measure sliding resistance in the shifting direction of the shift cable connecting hole position. Perform shifting for conditioning four or five times before measurement.
- If the measurement exceeds the specified standard value, apply grease on all sliding surfaces.
- After applying grease, measure again; if the measurement deviates from the standard value, replace the defective part(s).

◆Removal procedure◆

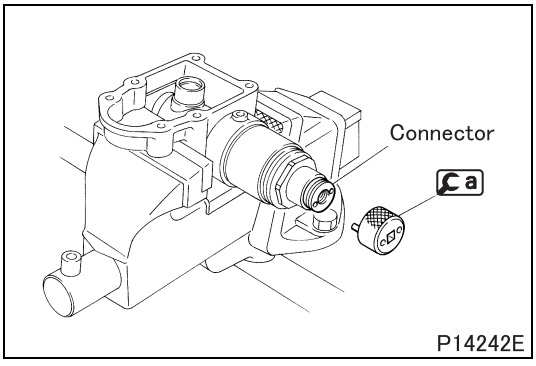

■ **Removal: Connector**

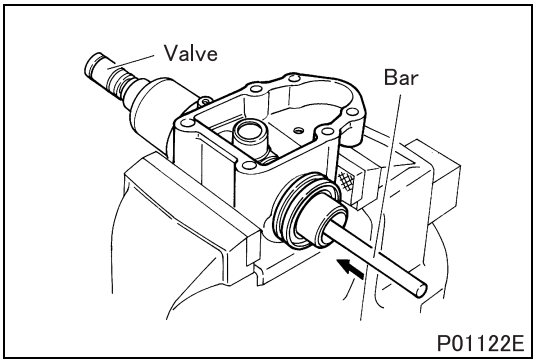

■ **Removal: Valve**

- Gently drive valve out from the shifter rod from the lever side using bar.

CAUTION ⚠

- **Do not drive valve too hard or you will damage the valve parts.**

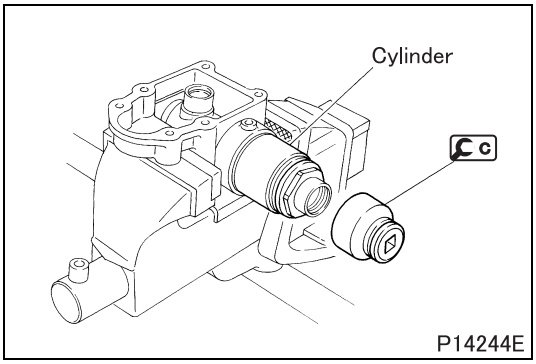

■ **Removal: Cylinder**

◆Installation procedure◆

■ **Installation: Cylinder**

- Install the cylinder by following the removal sequence in reverse. (See "■ **Removal: Cylinder**".)

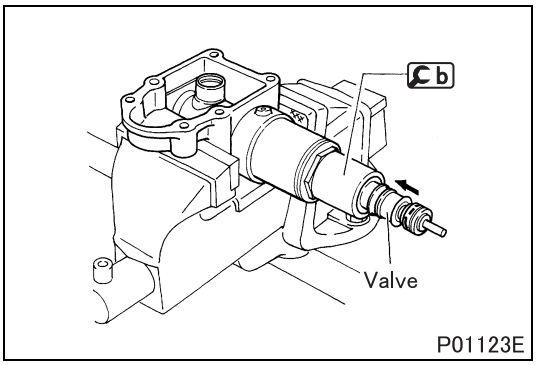

■ **Installation: Valve**

- Apply grease to valve.
- Install valve into the shifter rod using b, taking care not to damage the seals.

■ **Installation: Connector**

- Install the connector by following the removal sequence in reverse. (See "■ **Removal: Connector**".)

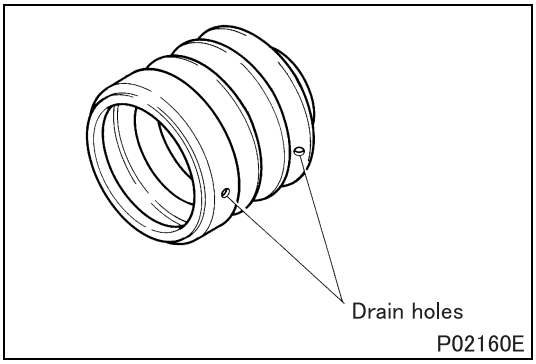

■ **Installation: Boot**

- When you install boot on housing, point drain holes downward.

POWER SHIFT

Valve

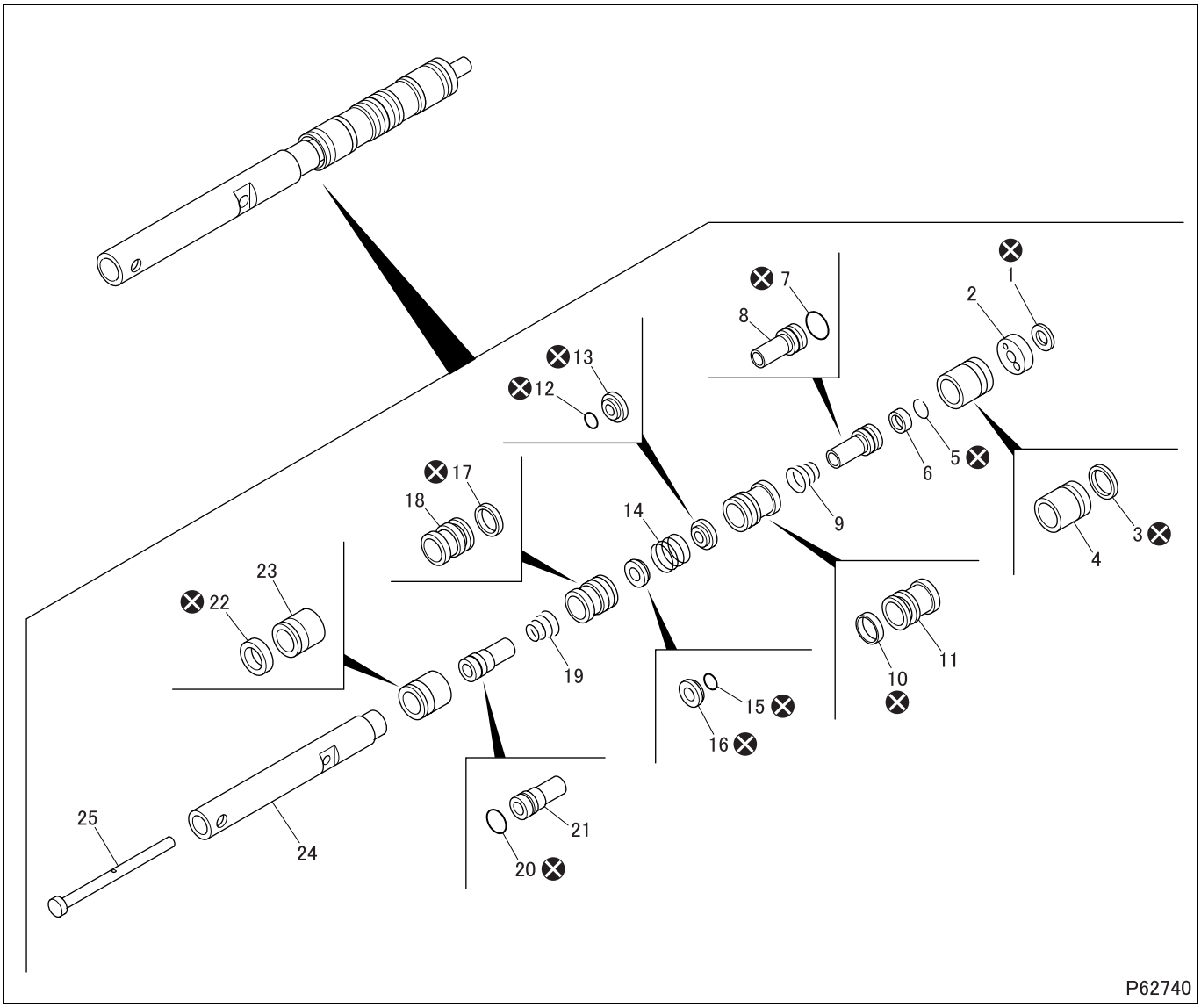

● Disassembly sequence

1 Filter
2 Collar
3 Square ring
4 Tube
5 Retaining ring
6 Plate
7 O-ring
8 Lifter
9 Spring
10 Square ring
11 Seat
12 O-ring
13 Seal
14 Spring
15 O-ring
16 Seal
17 Square ring
18 Seat
19 Spring
20 O-ring
21 Lifter
22 Square ring
23 Tube
24 Rod
25 Pipe

⊗: Non-reusable parts

CAUTION ⚠

- **Since the valve includes many parts, set them out accurately when disassembling.**

● Assembly sequence

Follow the disassembly sequence in reverse.

Repair kit: Power shift kit

CAUTION ⚠

- **Be careful to assemble springs in the correct order.**

Service standards (Unit: mm {in.})

Location	Maintenance item	Standard value	Limit	Remedy
9	Spring load (installed length 12.35 {0.49})	82 ± 8.2 N {18 ± 1.8 lbs, 8.4 ± 0.8 kgf}	67 N {15 lbs, 6.8 kgf}	Replace
14	Spring load (installed length 10 {0.39})	13 ± 1.3 N {2.9 ± 6.4 lbs, 1.3 ± 0.13 kgf}	9.8 N {2.2 lbs, 1.0 kgf}	Replace
19	Spring load (installed length 12.2 {0.48})	50 ± 5.0 N {11 ± 1.1 lbs, 5.06 ± 0.51 kgf}	40 N {9.0 lbs, 4.1 kgf}	Replace

Lubricant and/or sealant

Mark	Points of application	Specified lubricant and/or sealant	Quantity
–	All friction surfaces	Multipurpose grease [NLGI No.2 (Li soap)]	As required

Special tools (Unit: mm {in.})

Mark	Tool name and shape	Part No.	Application
a	Insert tool A: 30 {1.18}, B: 10 {0.39}, C: ϕ3.8 {0.15}, D: ϕ7.1 {0.28} 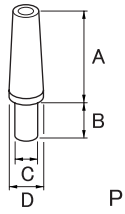 P101238	ME528899	Installation of retaining ring
b	Insert tool A: ϕ30 {1.18}, B: ϕ7 {0.28}, C: 29 {1.14}, D: 35 {1.38} 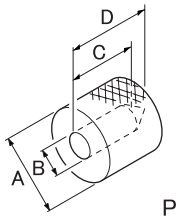 P101239	ME528896	

◆Removal procedure◆

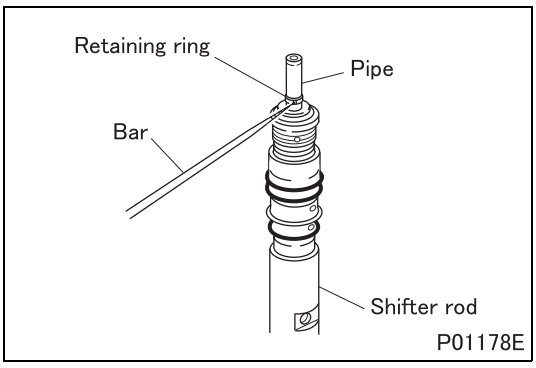

■ Removal: Retaining ring

- Secure the rod in a vice with caution.
- Remove the retaining ring from the pipe using something like needle.

◆Installation procedure◆

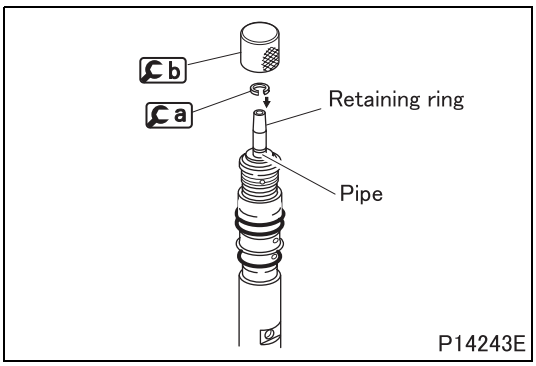

■Installation: Retaining ring

- Attach a to the pipe tip, push the retaining ring in a straight line using b, and secure it in the pipe groove.
- If the ring jams up during installation, reinstall it.

M E M O

EXTENSION HOUSING AND PARKING BRAKE

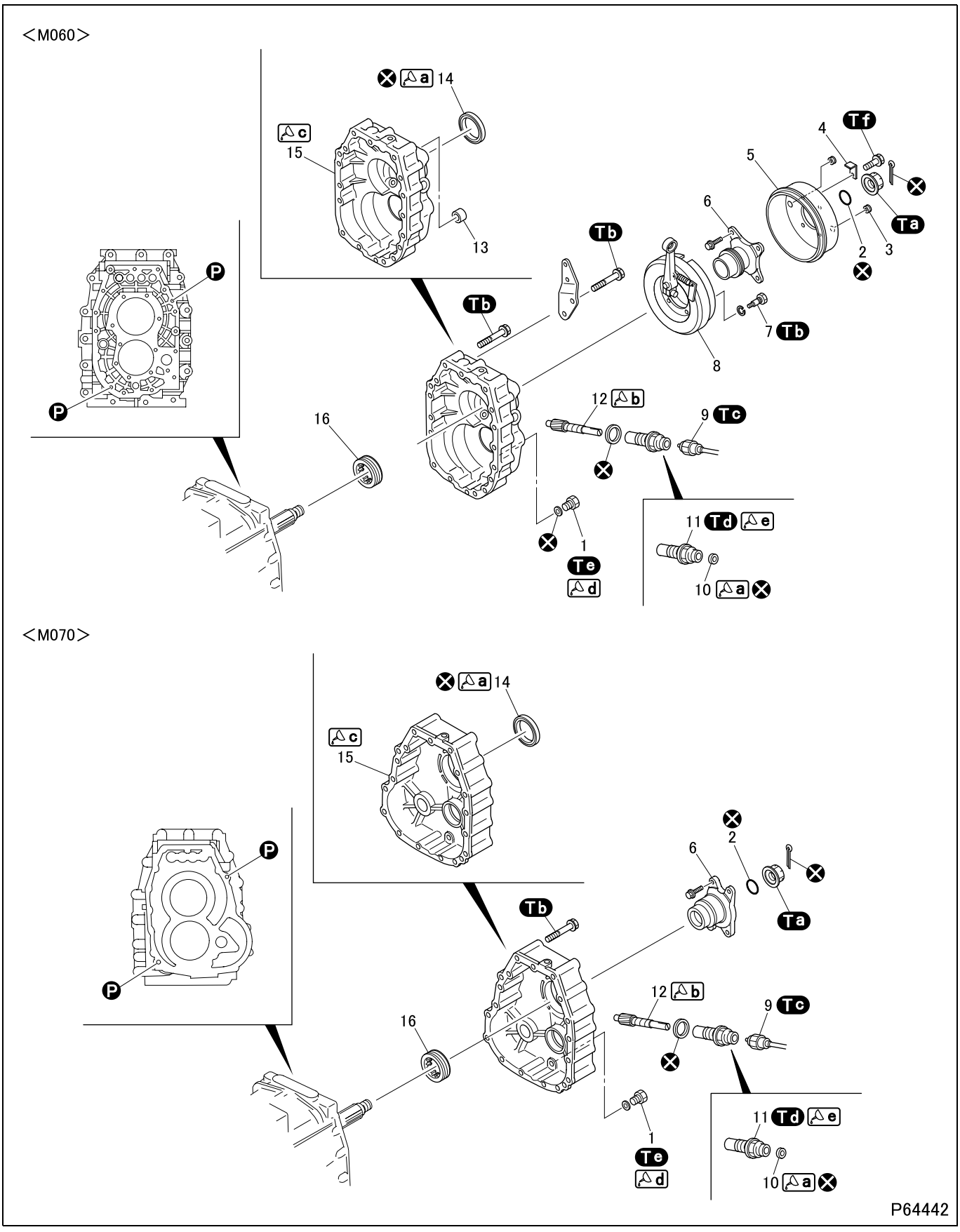

● **Disassembly sequence**

1 Drain plug
2 O-ring
3 Dust plug
4 Drum plate <M060>
5 Parking brake drum <M060>
6 Companion flange
7 Reamer bolt <M060>>
8 Parking brake support plate and shoe <M060> (See Gr36.)
9 Vehicle speed sensor
10 Oil seal
11 Speedometer gear bushing
12 Speedometer gear
13 Dust plug <M060>
14 Oil seal
15 Extension housing
16 Speedometer worm

Ⓟ: Locating pin
⊗: Non-reusable parts

CAUTION ⚠

- **Do not disassemble parking brake drum and companion flange unless it is absolutely necessary, because they have been adjusted for good balance. When they must be disassembled, make alignment marks and use them as reference at reassembly. The brake drum and companion flange should not be replaced as an individual part.**

● **Assembly sequence**

Follow the disassembly sequence in reverse.

Service standards (Unit: mm {in.})

Location	Maintenance item		Standard value	Limit	Remedy
5	Parking brake drum	Inner diameter	$\phi 254^{+0.5}_{0}$ {$10^{+0.020}_{0}$}	ϕ255.5 {10.1}	Replace
		Squareness	0 to 0.05 {0 to 0.0020}	–	Replace
		Concentricity	0 to 0.1 {0 to 0.0039}	–	Replace
		Cylindricity	0 to 0.05 {0 to 0.0020}	–	Replace
		Static rotation imbalance	0 to 0.88 N·cm {0 to 0.0065 ft.lbs, 0 to 90 gf·cm}	–	Replace
6	Runout at socket portion of companion flange		0 to 0.15 {0 to 0.0059}	0.15 {0.0059}	Replace
11, 12	Clearance between speedometer gear bushing and speedometer gear		0.02 to 0.07 {0.00079 to 0.0028}	0.15 {0.0059}	Replace

Tightening torque (Unit: N·m {ft.lbs, kgf·m})

Mark	Parts to be tightened		Tightening torque	Remarks
Ⓣa	Lock nut	M060	245 to 343 {180 to 255, 25 to 35}	–
		M070	588 to 1080 {435 to 795, 60 to 110}	–
Ⓣb	Reamer bolt		40.2 {30, 4.1}	–
	Bolt (extension housing mounting)			
Ⓣc	Vehicle speed sensor		20 ± 10 {15 ± 7.4, 2 ± 1}	–
Ⓣd	Speedometer gear bushing		74 {55, 7.5}	–
Ⓣe	Drain plug		68.6 ± 14.7 {51 ± 11, 7.0 ± 1.5}	–
Ⓣf	Bolt (drum plate mounting)		20 {15, 2}	–

Lubricant and/or sealant

Mark	Points of application	Specified lubricant and/or sealant	Quantity
a	Lip area of oil seal	Wheel bearing grease [NLGI No.2 (Li soap)]	As required
b	Shaft portion of speedometer gear	Molybdenum disulfide grease [NLGI No.2 (Li soap)]	Approx. 5 g {0.18 oz}
c	Mating surface of extension housing and transmission case	ThreeBond 1215	As required
d	Thread area of drain plug	ThreeBond 1105	As required
e	Thread area of speedometer gear bushing	ThreeBond 1104J	As required

Special tools (Unit: mm {in.})

Mark	Tool name and shape	Part No.	Application
a	Flange puller 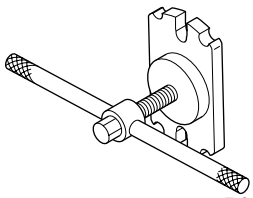 P02153	MH061393	Removal of companion flange
b	Oil seal installer A: M060 φ75 {2.95}, M070 φ78 {3.07} B: M060 φ58 {2.28}, M070 φ64 {2.52} C: M060 φ45 {1.77}, M070 φ50 {1.97} 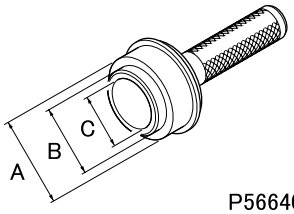 P56640	<M060> ME624242 <M070> MH062640	Installation of oil seal
c	Socket wrench A: 41 {1.61} 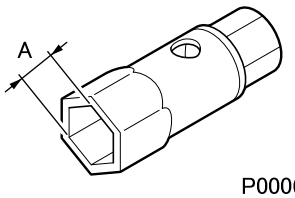 P00069	<M060> MH061532	Removal and installation of lock nut
d	Socket wrench A: 55 {2.17} 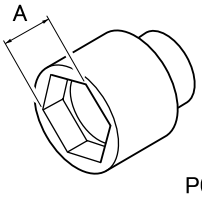 P02030	<M070> MH061519	

◆Work before removal◆

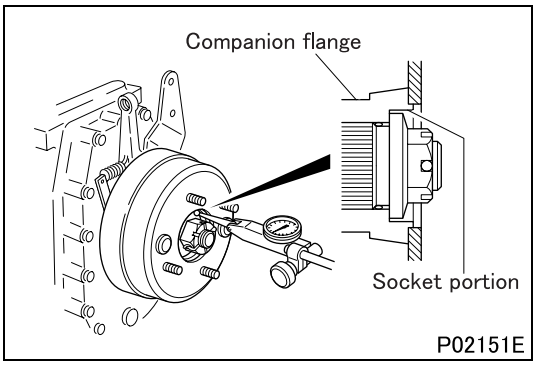

P02151E

■ **Inspection: Runout at socket portion of companion flange**

- If the measured value exceeds the limit, replace the companion flange.

◆Removal procedure◆

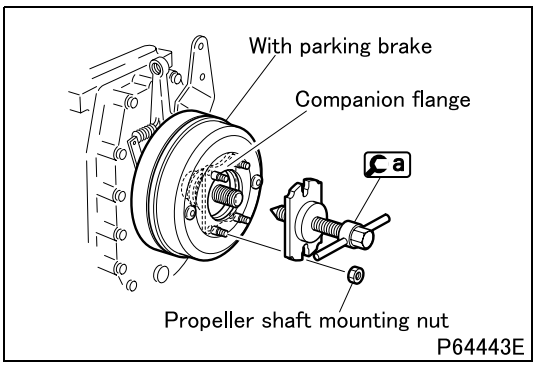

■ **Removal: Companion flange**

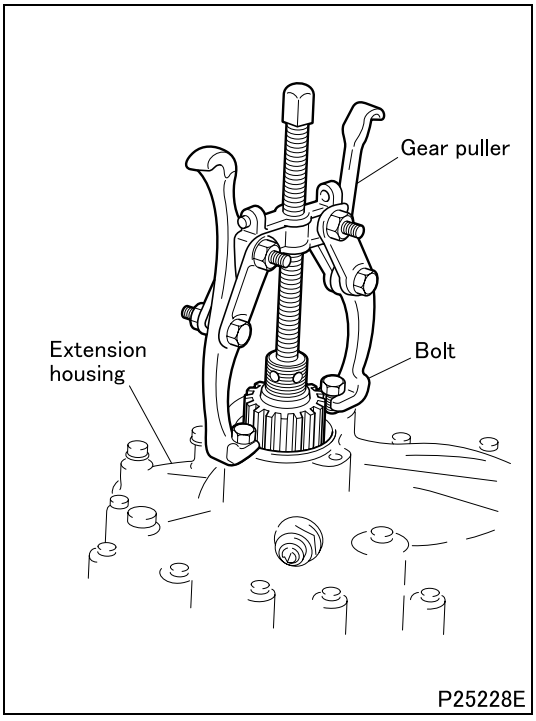

■ **Removal: Extension housing**

- Remove the extension housing using support plate and shoe mounting bolts or bolts (M060: M10 × 1.5 mm, M070: M12 × 1.75 mm) and a commercially available gear puller.

◆Inspection procedure◆

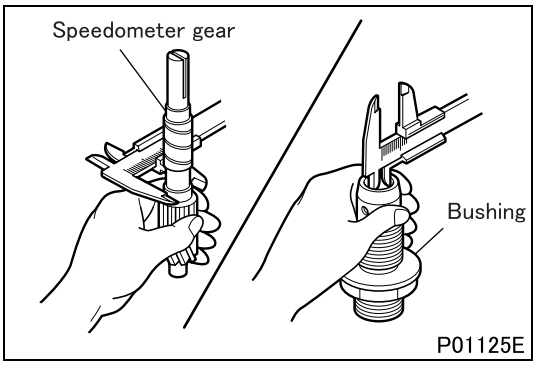

■ **Inspection: Clearance between speedometer gear bushing and speedometer gear**

- If the clearance is higher than the limit, replace the faulty parts.

◆Installation procedure◆

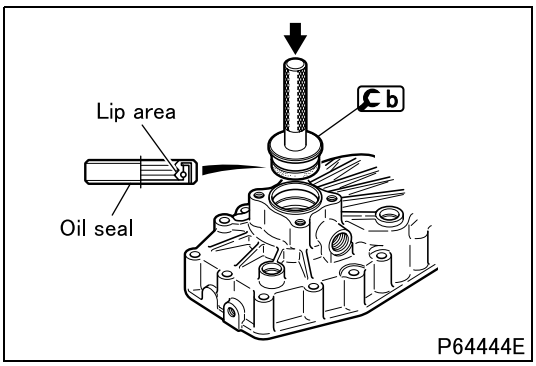

■ **Installation: Oil seal**

- Apply grease to the lip area of the oil seal.
- Install the oil seal into the extension housing in the direction as illustrated.

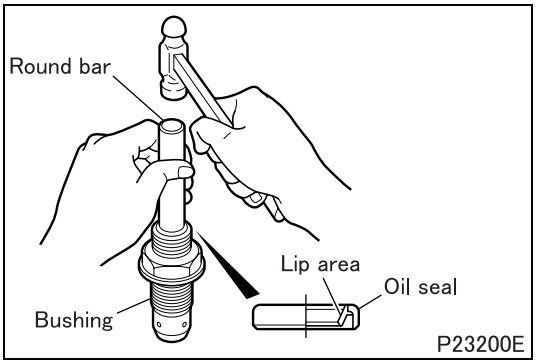

■ **Installation: Oil seal**

- Apply grease to the lip area of the oil seal.
- Install the oil seal evenly in the illustrated direction using a round bar with an outer diameter of approx. 15 mm {0.59 in.}.

M E M O

REVERSE IDLER GEAR <M060>

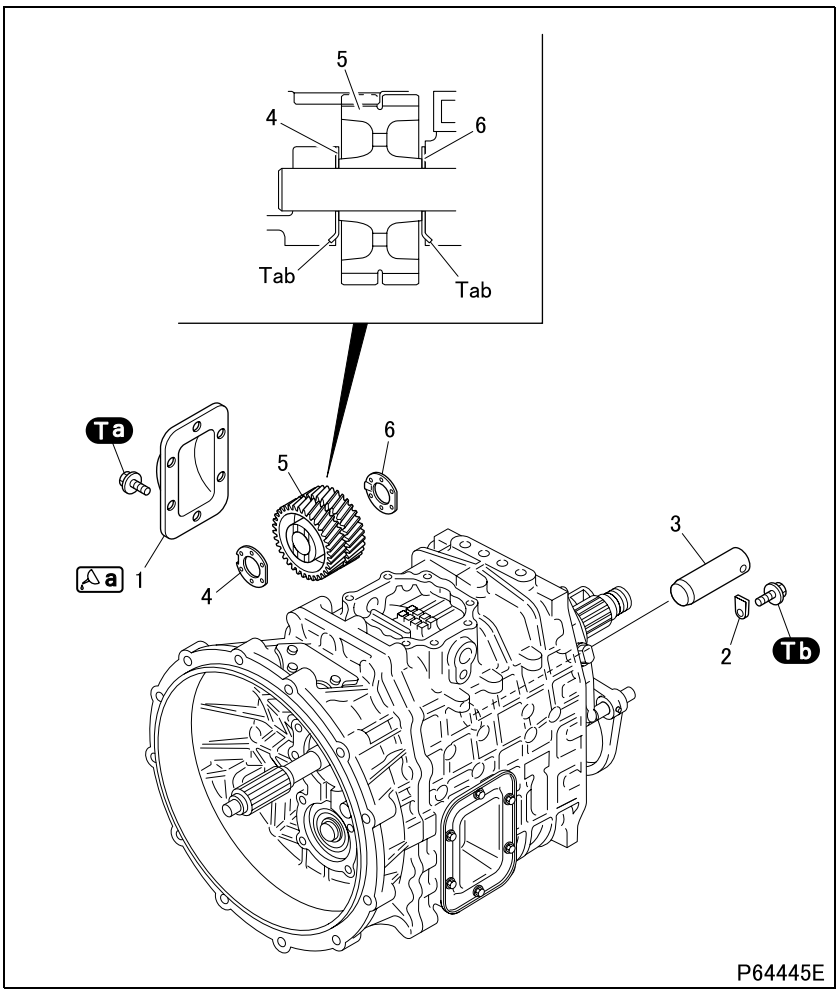

● **Disassembly sequence**

1 Reverse idler gear cover
2 Reverse shaft lock piece
3 Reverse idler gear shaft
4 Side washer
5 Reverse idler gear
6 Side washer

● **Assembly sequence**

Follow the disassembly sequence in reverse.

Service standards (Unit: mm {in.})

Location	Maintenance item	Standard value	Limit	Remedy
–	Play of reverse idler gear in diameter direction	0.05 to 0.07 {0.0020 to 0.0028}	0.12 {0.0047}	Replace
	End play of reverse idler gear	0.2 to 0.9 {0.0079 to 0.035}	1.2 {0.047}	Replace

Tightening torque (Unit: N·m {ft.lbs, kgf·m})

Mark	Parts to be tightened	Tightening torque	Remarks
Ta	Bolt (reverse idler gear cover mounting)	18.7 {14, 1.9}	–
Tb	Bolt (reverse shaft lock piece mounting)	40.2 {30, 4.1}	–

Lubricant and/or sealant

Mark	Points of application	Specified lubricant and/or sealant	Quantity
a	Mating surface of reverse idler gear cover and transmission case	ThreeBond 1215	As required

Special tools (Unit: mm)

Mark	Tool name and shape	Part No.	Application
Ca	Reverse shaft puller A: M12 × 1.25 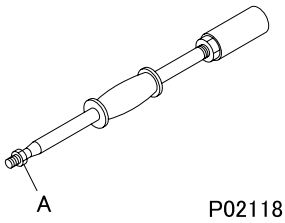	03726-82000	Removal of reverse idler gear shaft

◆Removal procedure◆

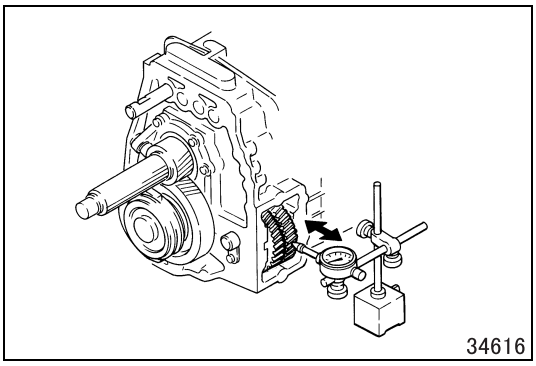

■ **Inspection: Reverse idler gear**

- After removing the reverse idler gear cover, carry out the following inspection.
- If the measured value exceeds the limit, replace defective parts.

(1) Play in diameter direction

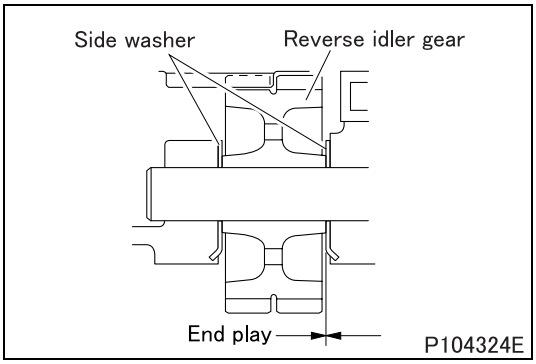

(2) End play

- Measure the end play using feeler gauge.

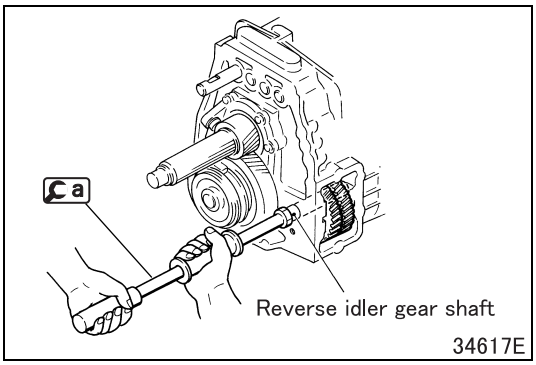

■ **Removal: Reverse idler gear shaft**

6TH GEAR <M060>

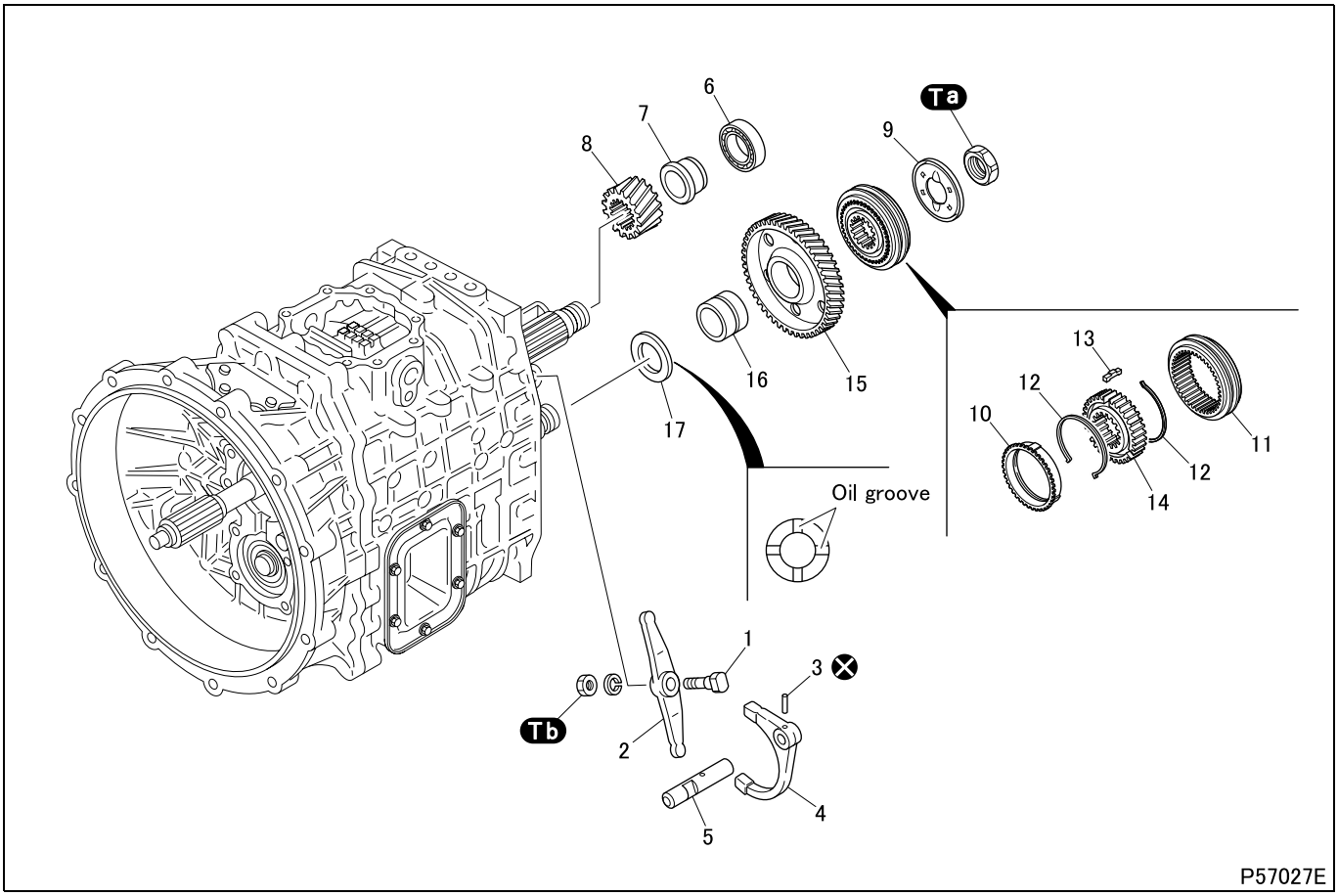

● **Disassembly sequence**

1 6th shift lever shaft
2 6th gear shift lever
3 Spring pin
4 6th gear shift fork
5 6th gear shift rail
6 Bearing
7 Bearing sleeve
8 Mainshaft 6th gear
9 Shifting key retainer
10 Synchronizer ring
11 Synchronizer sleeve
12 Shifting key spring
13 Shifting key
14 Synchronizer hub
15 Countershaft 6th gear
16 Countershaft 6th gear sleeve
17 Thrust washer

⊗: Non-reusable parts

● **Assembly sequence**

Follow the disassembly sequence in reverse.

CAUTION ⚠

- **Install the thrust washer, directing the oil groove side toward the gear side. Be sure to attach the thrust washer in the correct direction to avoid seizing.**

Service standards (Unit: mm {in.})

Location	Maintenance item	Standard value	Limit	Remedy
–	End play of countershaft 6th gear	0.25 to 0.40 {0.0098 to 0.016}	0.5 {0.020}	Replace
	Play of countershaft 6th gear in the diameter direction	0.105 to 0.150 {0.0041 to 0.0059}	0.3 {0.012}	Replace
2	Bend of 6th gear shift lever	0 to 0.05 {0 to 0.0020}	0.1 {0.0039}	Replace
4	Tilt of 6th gear shift fork claw	0 to 0.1 {0 to 0.0039}	0.2 {0.0079}	Replace

Location	Maintenance item	Standard value	Limit	Remedy
4, 11	Clearance between 6th gear shift fork and synchronizer sleeve	0.3 to 0.5 {0.012 to 0.020}	1.0 {0.039}	Replace
5	Bend of 6th gear shift rail	0 to 0.02 {0 to 0.00079}	0.04 {0.0016}	Replace
10, 13	Clearance between synchronizer ring keyway and shifting key	4.75 to 4.95 {0.187 to 0.195}	5.8 {0.228}	Replace
10, 15	Clearance between synchronizer ring and countershaft 6th gear	1.45 to 1.85 {0.057 to 0.073}	0.2 {0.0079}	Replace
11, 14	Play in the rotation direction of synchronizer sleeve and synchronizer hub	0.052 to 0.148 {0.0020 to 0.0058}	0.3 {0.012}	Replace
13, 14	Clearance between shifting key and synchronizer hub keyway	0.05 to 0.20 {0.0020 to 0.0079}	0.5 {0.020}	Replace

Tightening torque (Unit: N·m {ft.lbs, kgf·m})

Mark	Parts to be tightened	Tightening torque	Remarks
Ta	Lock nut	343 ± 49 {250 ± 36, 35 ± 5}	–
Tb	Nut (6th shift shaft and 6th shift lever mounting)	42.2 {31, 4.3}	–

Special tools (Unit: mm {in.})

Mark	Tool name and shape	Part No.	Application
Ca	Single spanner A: 46 {1.81} 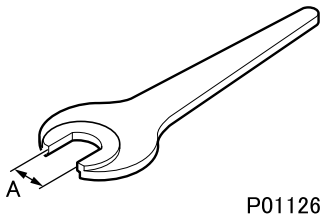 P01126	MH061555	Removal and installation of lock nut

◆Work before removal◆

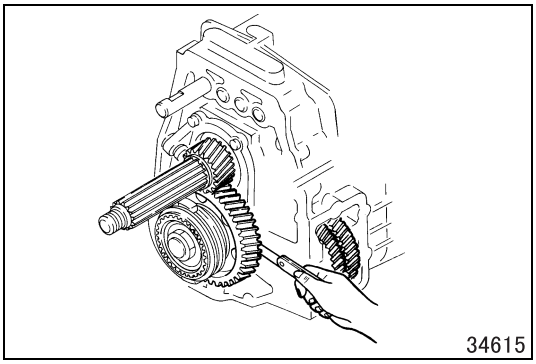

■ **Inspection: End play of countershaft 6th gear**

- Measure the end play using feeler gauge.
- If the measurement exceeds the limit, replace defective parts.

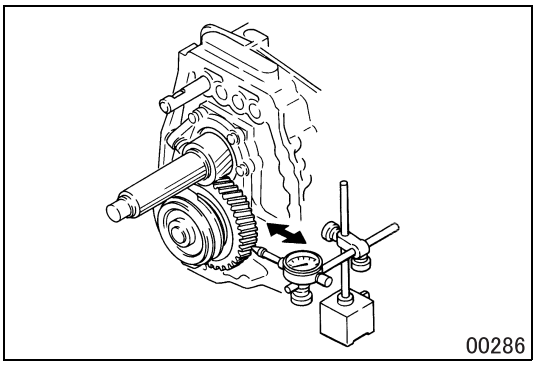

■ **Inspection: Play of countershaft 6th gear in the diameter direction**

- If the measurement exceeds the limit, replace defective parts.

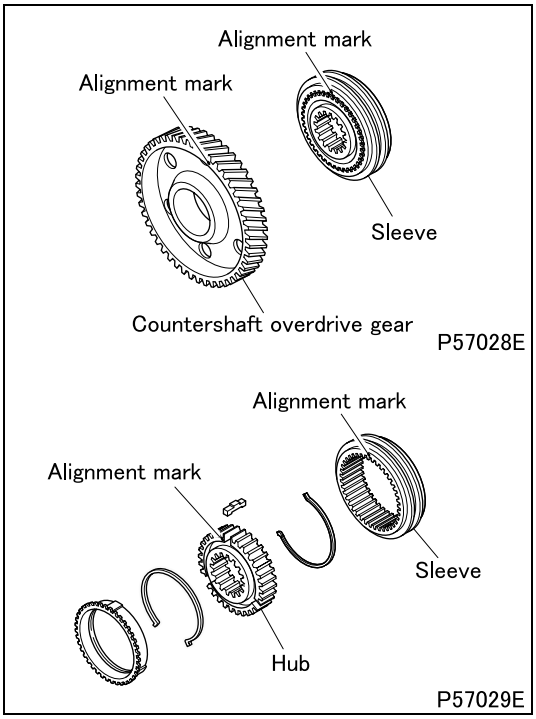

■ **Alignment mark: Synchronizer sleeve, synchronizer hub and countershaft 6th gear**

- Put an alignment mark on each one location of the synchronizer sleeve and countershaft 6th gear before disassembly.
- Put an alignment mark on the synchronizer hub in alignment with the alignment mark on the synchronizer sleeve before disassembly.

◆Inspection procedure◆

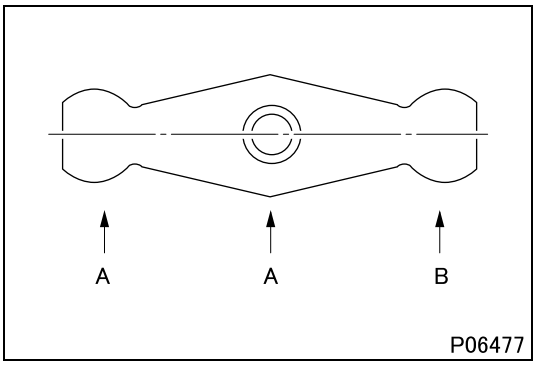

■ **Inspection: Bend of 6th gear shift lever**

- Measure bend B on the basis of illustrated A-A.
- If the measurement exceeds the limit, replace the 6th gear shift lever.

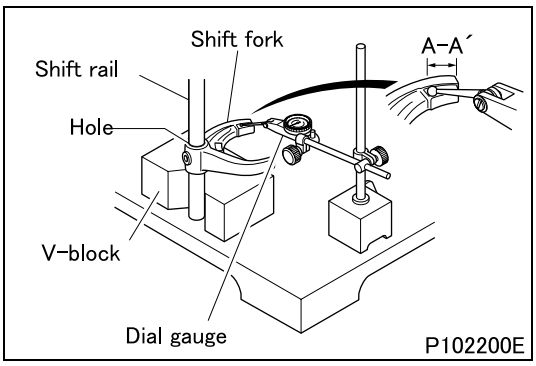

■ **Inspection: Tilt of 6th gear shift fork tip**

- Measure the tilt (difference between A and A´) of claw A-A´ against the 6th gear shift rail hole of 6th gear shift fork with pressing the rail to V-block and standing it vertiaclly.
- If the measurement exceeds the limit, replace the 6th gear shift fork.

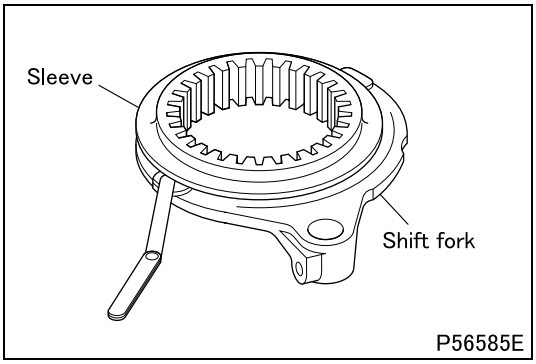

■ **Inspection: Clearance between 6th gear shift fork and synchronizer sleeve**

- If the measurement exceeds the limit, replace defective shift parts.

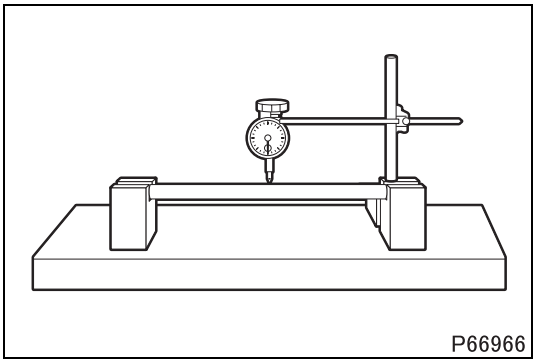

■ **Inspection: Bend of 6th gear shift rail**

- Measure the extent of bending at the middle of the 6th gear shift rail.
- While rotating the 6th gear shift rail by one revolution, read how much the dial gauge needle will move. A half of the reading observed represents the bend, if any, of the shaft.
- If measurement exceeds the limit, replace the 6th gear shift rail.

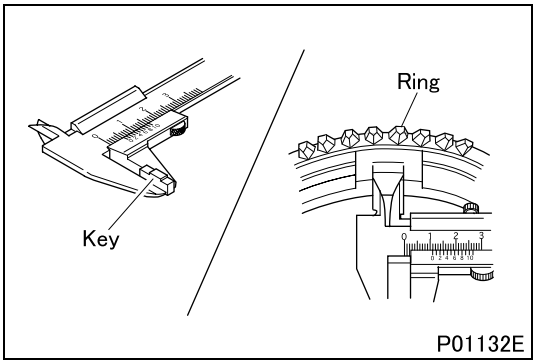

■ **Inspection: Clearance between synchronizer ring keyway and shifting key**

- If the measurement exceeds the limit, replace defective parts.

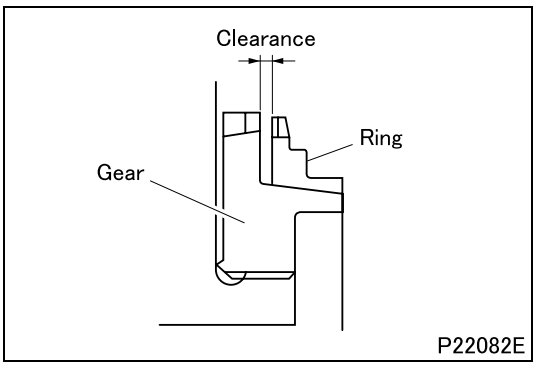

■ **Inspection: Clearance between synchronizer ring and countershaft 6th gear**

- When measuring this value, evenly press the synchronizer ring to the gear side and measure all around the circumference.
- If the measurement is less than the limit, replace both ring and gear.

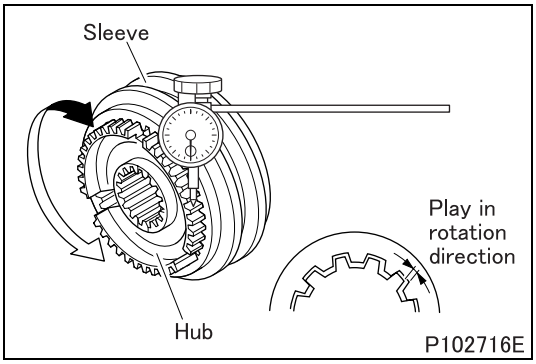

■ **Inspection: Play of synchronizer sleeve and synchronizer hub in rotation direction**

- Hold the synchronizer sleeve and measure the play with rotating the synchronizer hub.
- If the measurement exceeds the limit, replace defective parts.

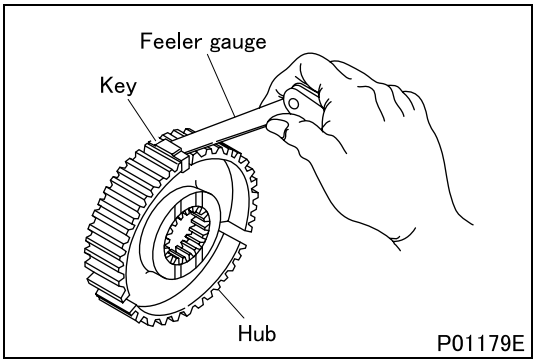

■ **Inspection: Clearance between shifting key and synchronizer hub keyway**

- If the measurement exceeds the limit, replace defective parts.

◆Installation procedure◆

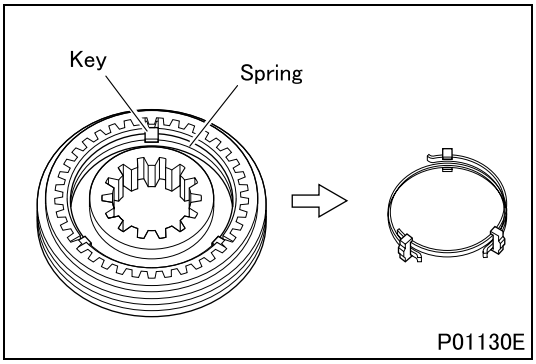

■ **Installation: Shifting key spring**

- After inserting the shifting key into the synchronizer hub groove, install the shifting key spring so that its opening is not located at the shifting key position.
- Install so that openings of the two shifting key springs are not located at the same position.

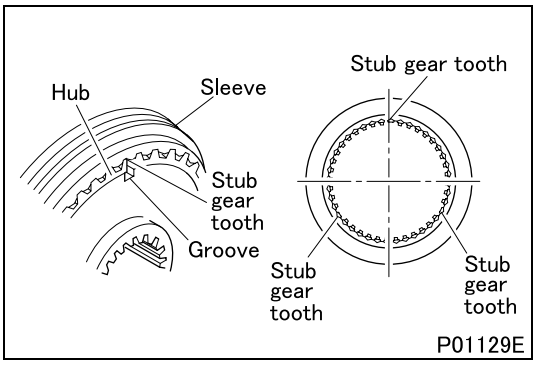

■ **Installation: Synchronizer sleeve and synchronizer hub**

- When replacing the synchronizer sleeve or synchronizer hub with a new one, align the plunger grooves (three locations) of the synchronizer hub with stub gear teeth (three locations) of the synchronizer sleeve to install.

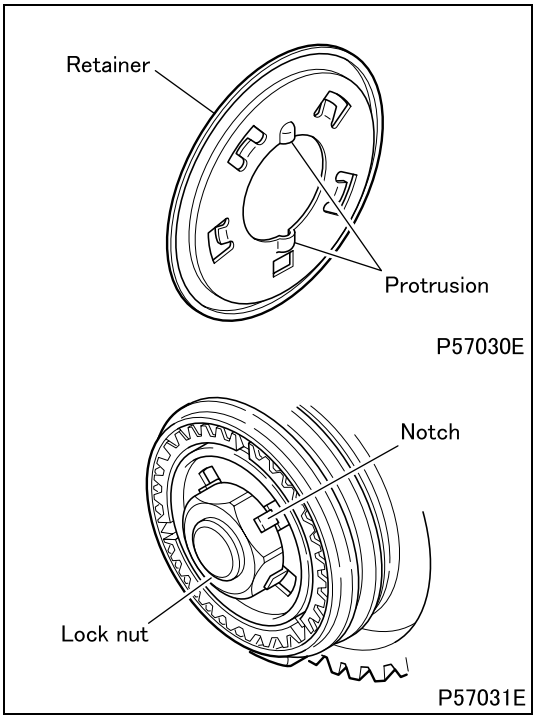

■ **Installation: Shifting key retainer**

- Fit the protrusions (two locations of the shifting key retainer into the grooves of the synchronizer hub to install.
- After tightening with the lock nut, bend four notches of the shifting key retainer toward the lock nut side.

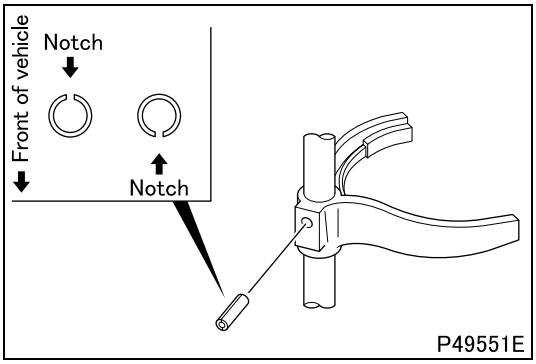

■ **Installation: Spring pin**

- Install the spring pin in the illustrated direction (with the notch of the spring pin facing the front or rear of the vehicle). Install so that the spring pin protrudes from the reverse gear shift fork by 0 to 0.5 mm {0 to 0.020 in.}.

CAUTION ⚠

- **When installing, be careful not to apply load to the 6th gear shift rail.**

REVERSE GEAR AND REVERSE IDLER GEAR <M070>

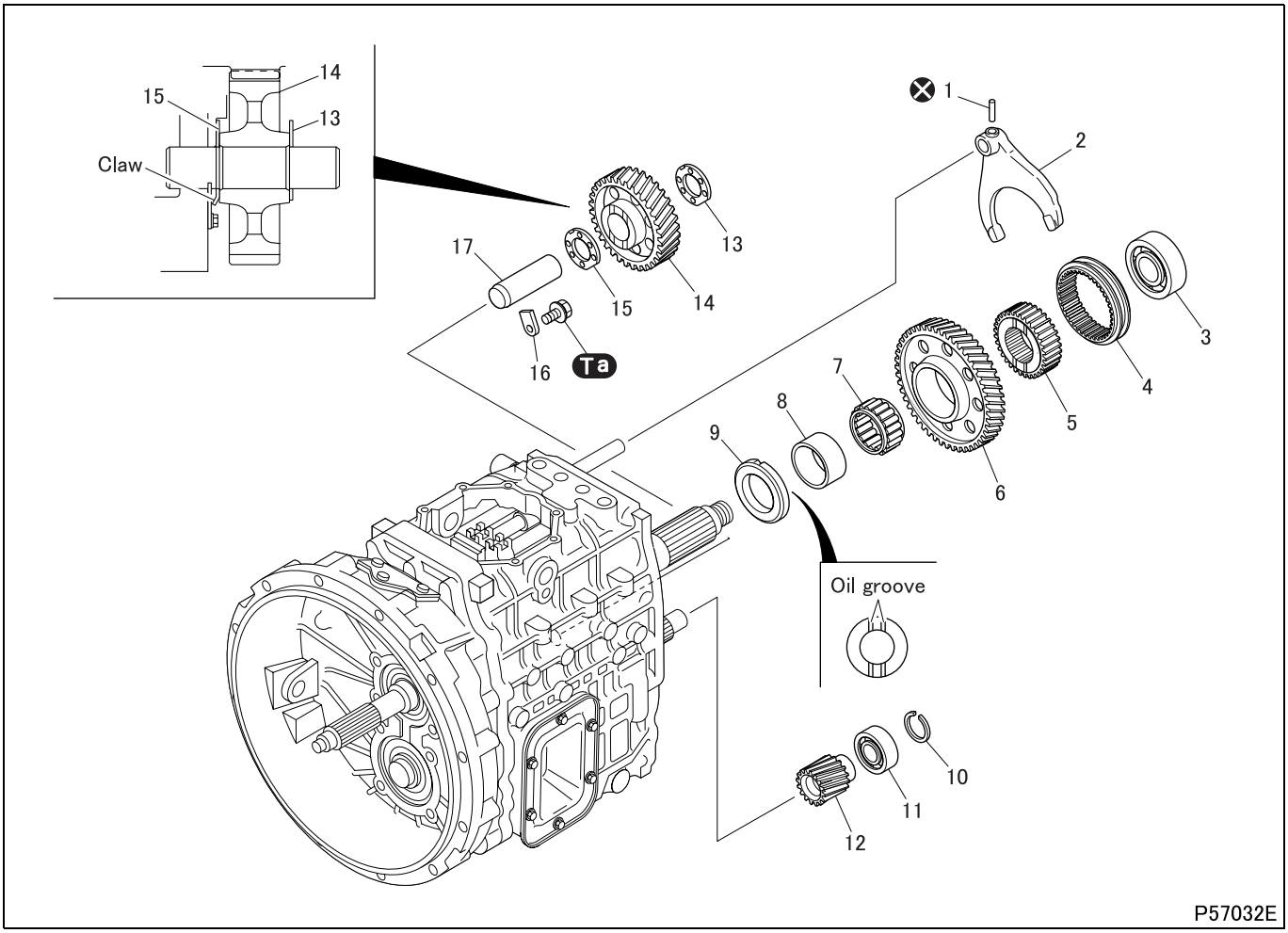

● **Disassembly sequence**

1 Spring pin
2 Reverse gear shift fork
3 Mainshaft rear rear bearing
4 Synchronizer sleeve
5 Reverse hub
6 Mainshaft reverse gear
7 Needle bearing
8 Mainshaft reverse gear bearing sleeve
9 Thrust washer
10 Snap ring
11 Countershaft rear rear bearing
12 Countershaft reverse gear
13 Side washer
14 Reverse idler gear
15 Side washer
16 Reverse shaft lock piece
17 Reverse idler gear shaft

⊗: Non-reusable parts

● **Assembly sequence**

Follow the disassembly sequence in reverse.

CAUTION ⚠

- **Install the thrust washer, directing the oil groove side toward the gear side. Be sure to attach the thrust washer in the right direction to avoid seizing.**

Service standards (Unit: mm {in.})

Location	Maintenance item	Standard value	Limit	Remedy
–	End play of mainshaft reverse gear	0.20 to 0.40 {0.0079 to 0.016}	0.5 {0.020}	Replace
	Play in the diameter direction of mainshaft reverse gear	0.06 to 0.10 {0.0024 to 0.0039}	0.10 {0.0039}	Replace
–	End play of reverse idler gear	0.2 to 0.9 {0.0079 to 0.035}	1.2 {0.047}	Replace
	Play in the diameter direction after assembly of reverse idler gear	0.05 to 0.07 {0.0020 to 0.0028}	0.15 {0.0059}	Replace
2, 4	Clearance between reverse gear shift fork and synchronizer sleeve	0.3 to 0.5 {0.012 to 0.020}	1.0 {0.039}	Replace
4, 5	Play in the rotation direction of synchronizer sleeve and reverse hub	0.052 to 0.148 {0.0020 to 0.0058}	0.3 {0.012}	Replace
8	Outer diameter of mainshaft reverse gear bearing sleeve	70.96 to 70.97 {2.793 to 2.794}	70.90 {2.791}	Replace

Tightening torque (Unit: N·m {ft.lbs, kgf·m})

Mark	Parts to be tightened	Tightening torque	Remarks
Ta	Bolt (reverse shaft lock piece mounting)	40.2 {30, 4.1}	–

Special tools

Mark	Tool name and shape	Part No.	Application
a	Mainshaft bearing installer 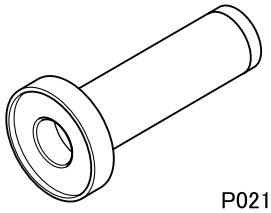 P02115	*MH062634	Installation of mainshaft reverse gear bearing sleeve
b	Countershaft bearing installer 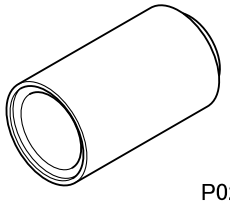 P02117	*MH062642	Installation of countershaft rear bearing installer
c	Snap ring expander 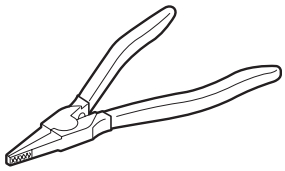 P01137	MH061268	Removal and installation of snap ring

*: Components of puller and installer kit (See puller and installer.)

◆Inspection before removal◆

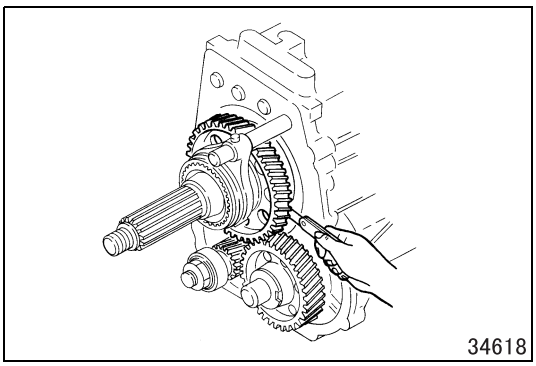

■ **Inspection: End play of mainshaft reverse gear**

- Measure the end play using feeler gauge.
- If the measurement exceeds the limit, replace defective parts.

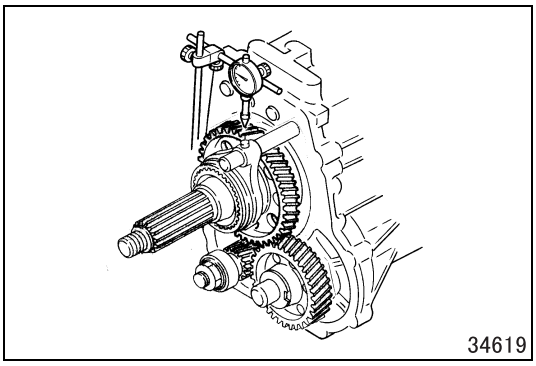

■ **Inspection: Play of mainshaft reverse gear in the diameter direction**

- If the measured value exceeds the limit, replace defective parts.

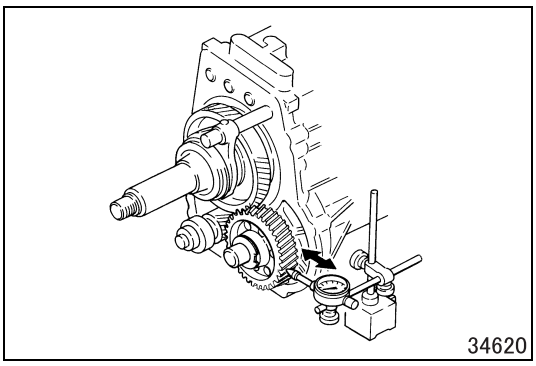

■ **Inspection: Play of reverse idler gear in the diameter direction**

- If the measured value exceeds the limit, replace defective parts.

◆Inspection procedure◆

■ **Inspection: Tilt of claws of reverse gear shift fork**

- For the inspection of reverse gear shift fork, see the “Transmission body (SHIFT RAILS AND SHIFT FORKS <M070>)”.

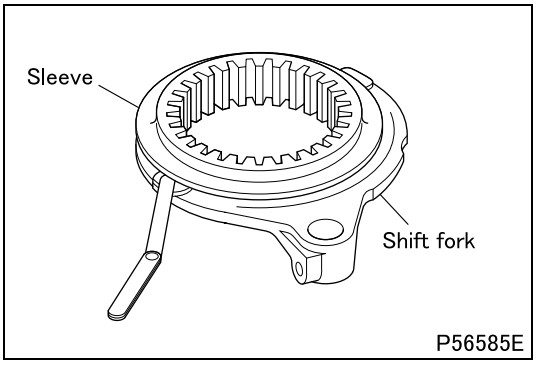

■ **Inspection: Clearance between reverse gear shift fork and synchronizer sleeve**

- If the measurement exceeds the limit, replace defective parts.

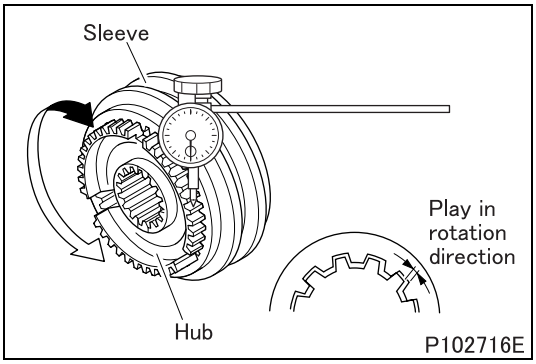

■ **Inspection: Play of synchronizer sleeve and synchronizer hub in rotation direction**

- Hold the synchronizer sleeve and measure the play with rotating the synchronizer hub.
- If the measurement exceeds the limit, replace defective parts.

◆Installation procedure◆

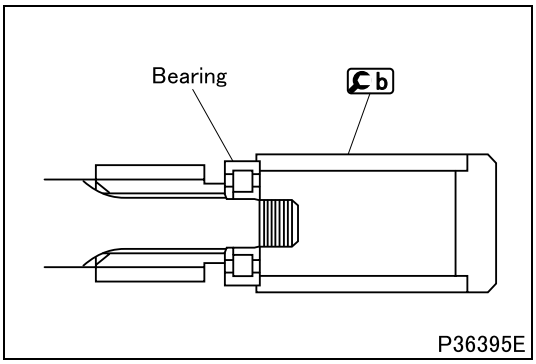

■ **Installation: Countershaft rear bearing**

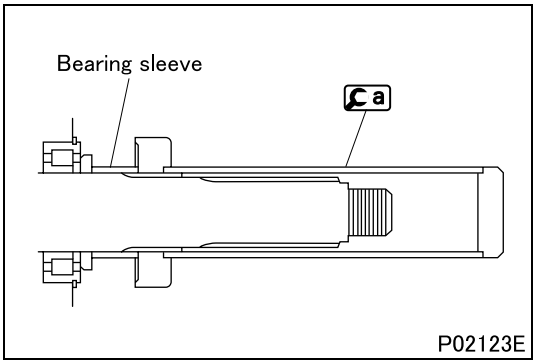

■ **Installation: Mainshaft and reverse gear bearing sleeve**

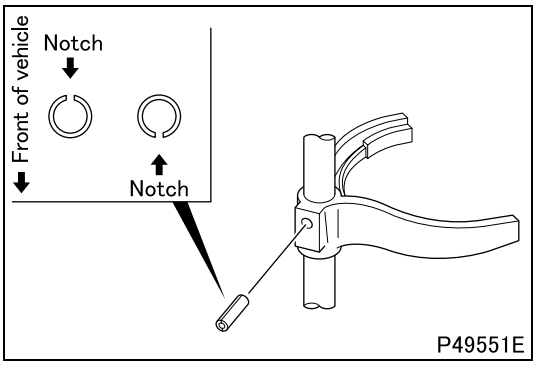

■ **Installation: Spring pin**

- Install the spring pin in the illustrated direction (with the notch of the spring pin facing the front or rear of the vehicle). Install so that the spring pin protrudes from the reverse gear shift fork by 0 to 0.5 mm. {0 to 0.020 in.}

CAUTION ⚠

- **When installing, do not apply load to the shift rail of the transmission body.**

TRANSMISSION BODY

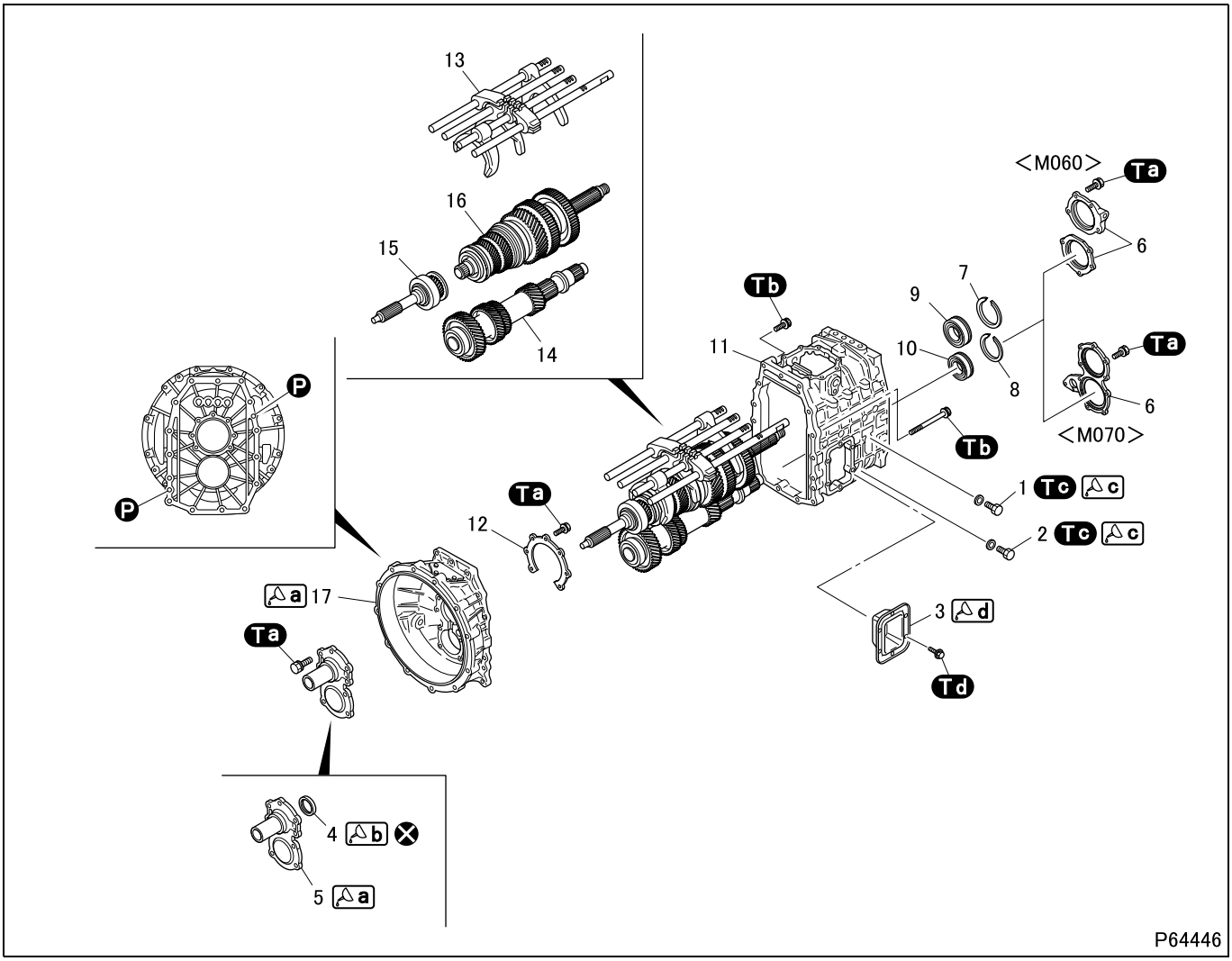

● **Disassembly sequence**

1 Inspection plug
2 Drain plug
3 PTO cover
4 Oil seal
5 Front bearing retainer
6 Rear bearing retainer
7 Snap ring
8 Snap ring
9 Mainshaft rear bearing
10 Countershaft rear bearing
11 Transmission case
12 Drive pinion bearing retainer
13 Shift rail and shift fork (See later section.)
14 Countershaft (See countershaft.)
15 Drive pinion (See drive pinion.)
16 Mainshaft (See mainshaft.)
17 Clutch housing

Ⓟ: Locating pin
⊗: Non-reusable parts

NOTE

- **After removing the front bearing retainer, perform work with the transmission laid vertically on its clutch housing side. Apply a batten to the clutch housing to prevent damage to the drive pinion.**
- **If the countershaft, drive pinion and mainshaft assembly is not to be disassembled, only the shift rail and shift fork can be removed with the assembly still fitted in the clutch housing.**

● **Assembly sequence**

Follow the disassembly sequence in reverse.

Tightening torque (Unit: N·m {ft.lbs, kgf·m})

Mark	Parts to be tightened	Tightening torque	Remarks
Ta	Bolt (front bearing retainer mounting)	40.2 {30, 4.1}	–
	Bolt (rear bearing retainer mounting)		
	Bolt (drive pinion bearing retainer mounting)		
Tb	Bolt (transmission case mounting)	122 {90, 12.4}	–
Tc	Inspection plug	68.6 ± 14.7 {51 ± 11, 7.0 ± 1.5}	–
	Drain plug		
Td	Bolt (PTO cover mounting)	18.7 {14, 1.9}	–

Lubricant and/or sealant

Mark	Points of application	Specified lubricant and/or sealant	Quantity
a	Clutch housing mounting surface of front bearing retainer	ThreeBond 1215 or Loctite 5999	As required
	Transmission case mounting surface of clutch housing		
b	Lip area of oil seal	Wheel bearing grease [NLGI No.2 (Li soap)]	As required
c	Thread area of inspection plug	ThreeBond 1105	As required
	Thread area of drain plug		
d	Transmission case mounting surface of PTO cover	Loctite 5999	As required

Special tools (Unit: mm {in.})

Mark	Tool name and shape	Part No.	Application
a	Oil seal front guide A: ϕ46 {1.81}, B: ϕ44 {1.73}, C: 217 {8.54} 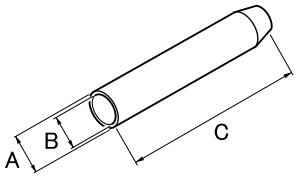 P01136	MH061991	Serving as guide for oil seal when front bearing retainer is installed
b	Oil seal installer A: ϕ72 {2.83}, B: ϕ50 {1.97}, C: ϕ40 {1.57} 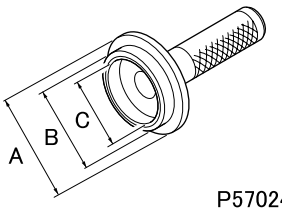 P57024	MH061992	Installation of oil seal
c	Snap ring expander 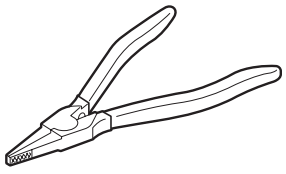 P01137	MH061268	Removal and installation of snap ring
d	Mainshaft bearing puller 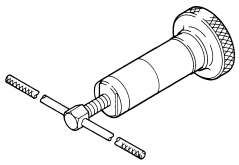 01138	<M060> *MH061732 <M070> MH062433	Removal of mainshaft rear bearing

Mark	Tool name and shape	Part No.	Application
e	Mainshaft bearing installer 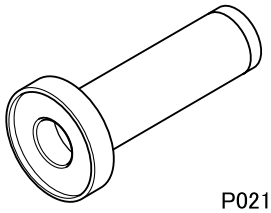 P02115	<M060> *MH624234 <M070> *MH062634	Installation of mainshaft rear bearing
f	Countershaft bearing puller 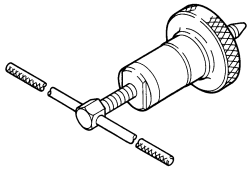 01139	<M060> *MH061731 <M070> *MH062432	Removal of countershaft rear bearing
g	Countershaft bearing installer 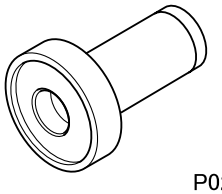 P02141	<M060> *ME624233 <M070> *MH062630	Installation of countershaft rear bearing
h	Eyebolt A M10 × 1.5 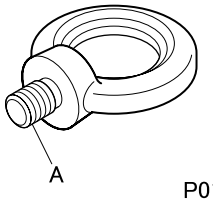 P01140	MH062340	Lifting of transmission case
i	Gear puller 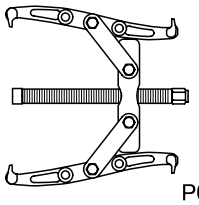 P01148	<M060> MH062308	Removal of transmission case
j	Gear puller 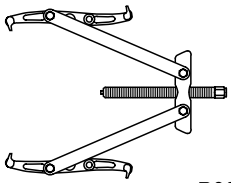 P03160	<M070> MH062250	Removal of transmission case

<table>
<tr><th>Mark</th><th>Tool name and shape</th><th>Part No.</th><th>Application</th></tr>
<tr><td>k</td><td>Steel lifting band
 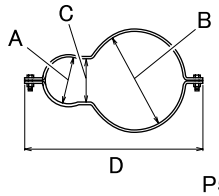

P55698
<table><tr><th></th><th>A</th><th>B</th><th>C</th><th>D</th></tr><tr><td>M060</td><td>ϕ87
{3.43}</td><td>ϕ175
{6.89}</td><td>80
{3.15}</td><td>336
{13.2}</td></tr><tr><td>M070</td><td>ϕ116
{4.57}</td><td>ϕ173
{6.81}</td><td>100
{3.94}</td><td>360
{14.2}</td></tr></table></td><td><M060>
MH062343
<M070>
MH062344</td><td rowspan="2">Removal and installation of countershaft, mainshaft and drive pinion</td></tr>
<tr><td>l</td><td>Eye nut
<table><tr><th></th><th>A</th></tr><tr><td>M060</td><td>M27 × 1.5</td></tr><tr><td>M070</td><td>M36 × 1.5</td></tr></table> 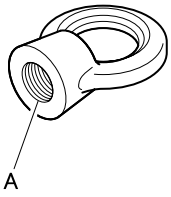

P01142</td><td><M050, M060>
MH062341
<M070>
MH062342</td></tr>
<tr><td>n</td><td>Countershaft bearing installer
 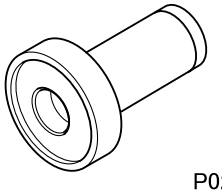
P02141</td><td><M060>
*ME624233
<M070>
*MH062630</td><td>Installation of countershaft front bearing</td></tr>
</table>

*: Components of puller and installer kit (See puller and installer.)

◆Removal procedure◆

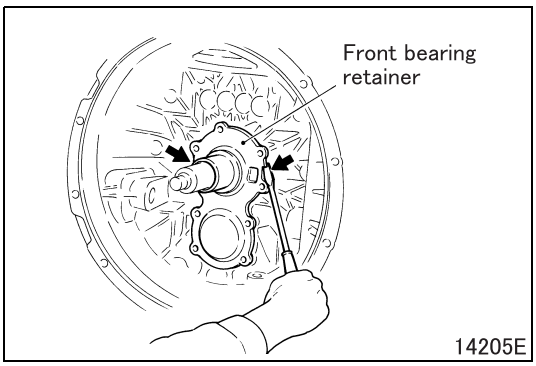

■ Removal: Front bearing retainer

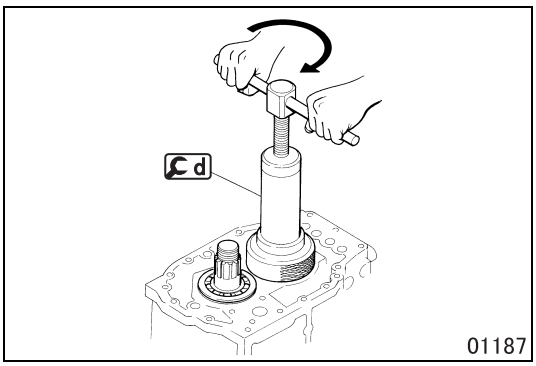

■ Removal: Mainshaft rear bearing

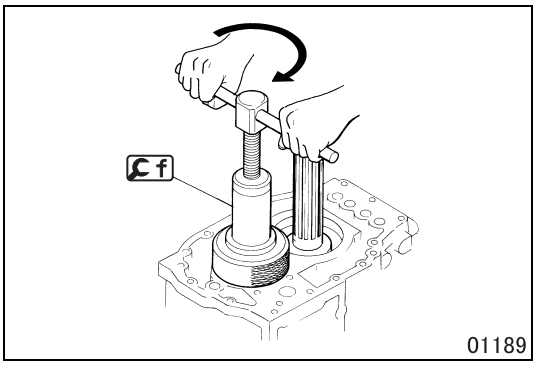

■ Removal: Countershaft rear bearing

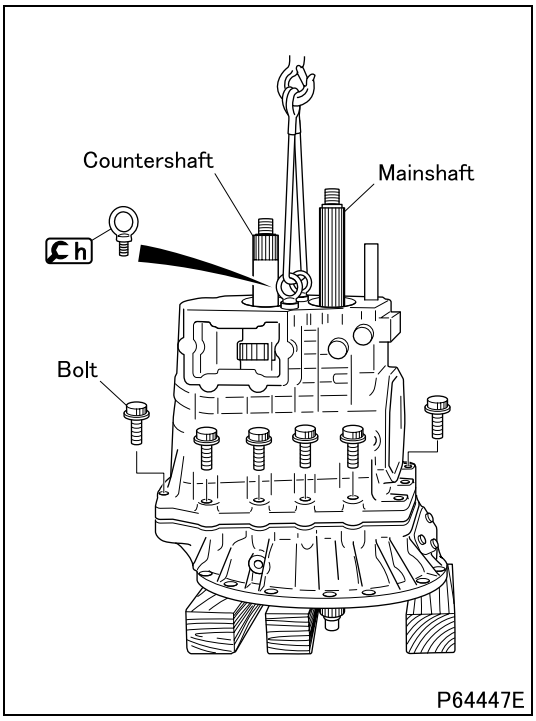

■ Removal: Transmission case

- There are two methods of removing the transmission case, using a crane and using a gear puller.

(1) Method of using a crane

- Attach h to the transmission case and prepare for hoisting it with a crane.
- After removing bolts, hoist the transmission case with a crane and keep hitting the rear ends of the countershaft and mainshaft, and clutch housing. Use a plastic hammer to remove the transmission case.

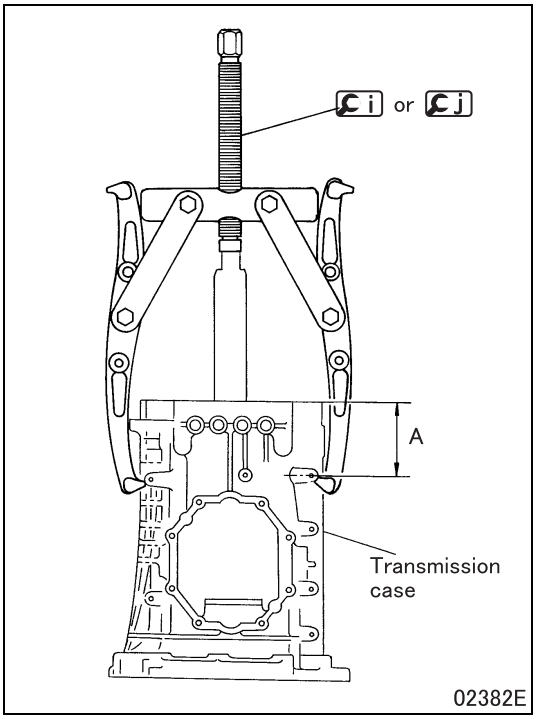

(2) Method of using a gear puller

- Attach i or j as illustrated, and remove the transmission case.

Transmission type	A (mm {in.})
M060	97 {3.82}
M070	193.5 {7.62}

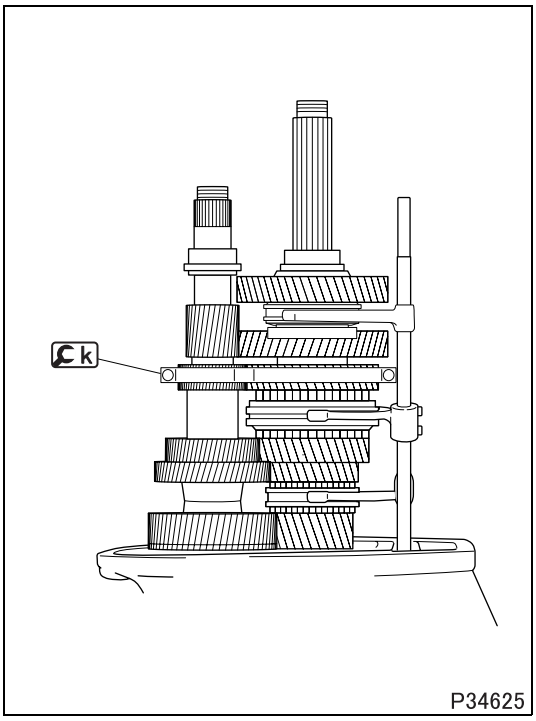

■ **Removal: Shift rail and shift fork, countershaft, drive pinion and mainshaft**

- After removing the transmission case, secure the countershaft and the 2nd or 3rd gear area of the countershaft and mainshaft with k for safety. Be sure to tighten the steel lifting band enough to prevent it from coming undone, but not excessively.

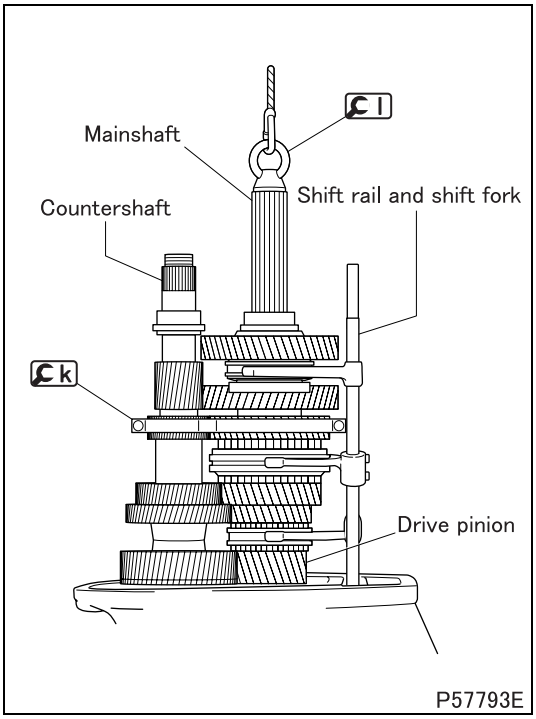

- Leave the countershaft and mainshaft secured with [k].
- Install [l] on the mainshaft and make preparations for lifting it up with a crane.
- Secure the shift rail and shift fork with a rubber band to prevent it from coming undone from the mainshaft.
- Apply a batten to the clutch housing or intermediate plate, and while keeping hitting it, hoist the transmission body. Use a plastic hammer to remove the shift rail and shift fork, countershaft, drive pinion and mainshaft.

CAUTION ⚠

- **When lifting up, be sure to support the drive pinion with your hand to prevent it from falling.**

◆Installation procedure◆

■ Installation: Shift rail and shift fork, countershaft, drive pinion and mainshaft

- There are two methods of the installation procedure.

(1) Method 1

- Install the shift rail and shift fork, countershaft, drive pinion and mainshaft by following the disassembly sequence in reverse. (See "**■ Removal: Shift rail and shift fork, countershaft, drive pinion and mainshaft**".)

NOTE

- **Be sure to remove all the special tools used.**

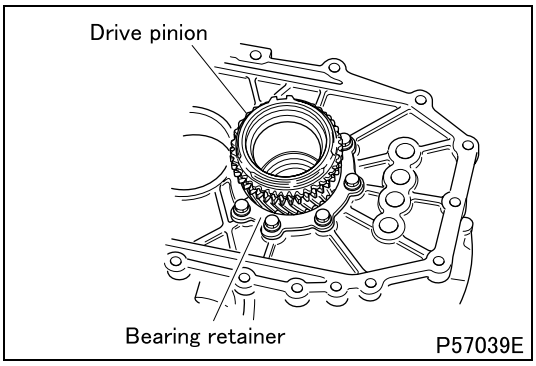

(2) Method 2

NOTE

- **In the case of this method, install with the countershaft front bearing removed. (See Countershaft.)**

- After installing the drive pinion on the clutch housing or intermediate plate, install the bearing retainer.

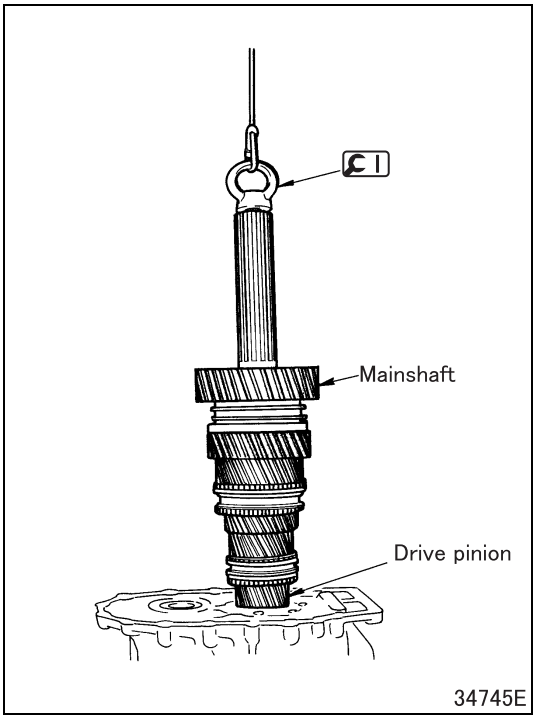

- Install C1 on the rear end of the mainshaft, and hoist it with a crane to install on the drive pinion.

CAUTION ⚠

- **After installation, support the mainshaft with a crane to prevent it from falling down.**

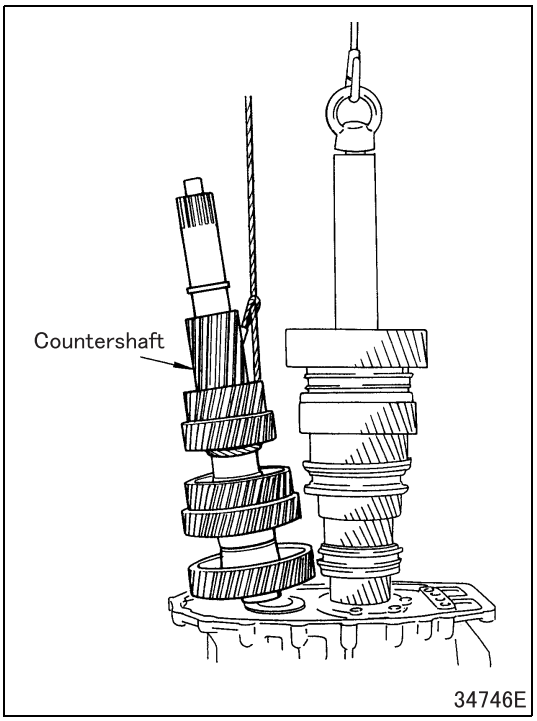

- Install the countershaft on the clutch housing or intermediate plate.

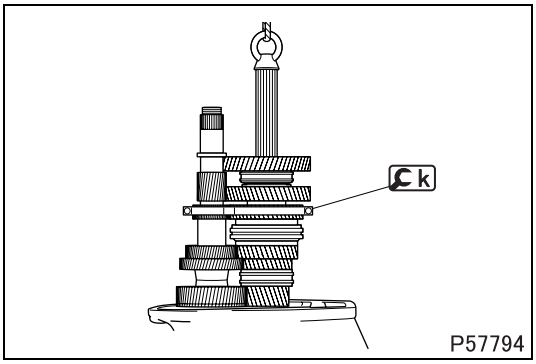

- Fix the 2nd gears or 3rd gears of the countershaft and mainshaft using k to ensure safety. Tighten steel lifting band adequately enough to prevent it from coming undone, but not excessively.
- Install the shift rail and shift fork on the mainshaft.

CAUTION ⚠

- **Be sure to remove all special tools used.**

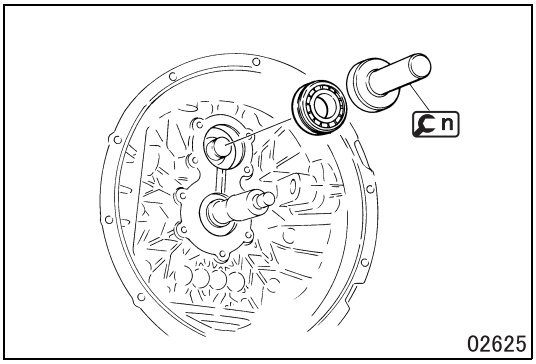

- After installation of the transmission case, place it so that the countershaft faces upward, and install the countershaft front bearing on the clutch housing or intermediate plate using n.

CAUTION ⚠

- **Be sure to install the snap ring of the bearing.**

■Installation: Transmission case

- Follow the disassembly sequence in reverse. (See "■ **Removal: Transmission case**".)

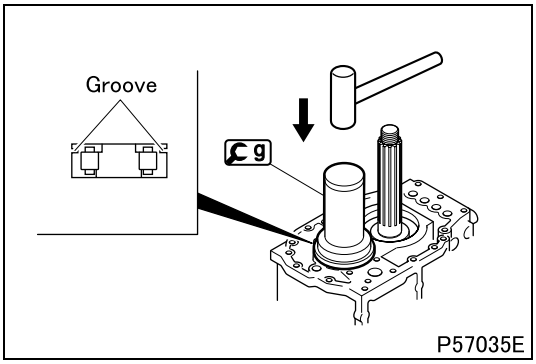

■Installation: Countershaft rear bearing

- Install the countershaft rear bearing on the transmission case in the illustrated direction.

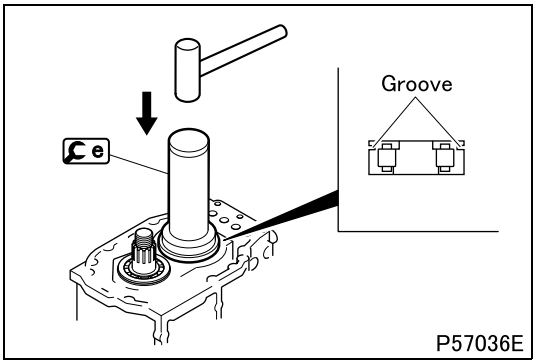

■Installation: Mainshaft rear bearing

- Install the mainshaft rear bearing on the transmission case in the illustrated direction.

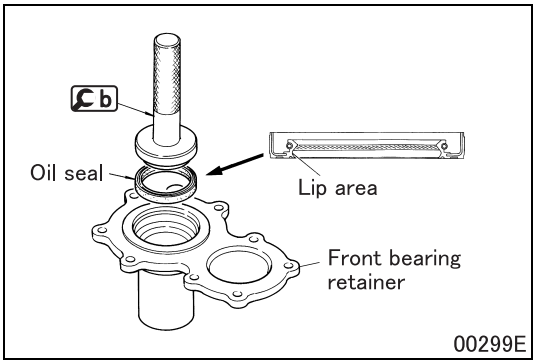

■ **Installation: Oil seal**

- Apply grease to the lip area of the oil seal and install it on the front bearing retainer in the illustrated direction.

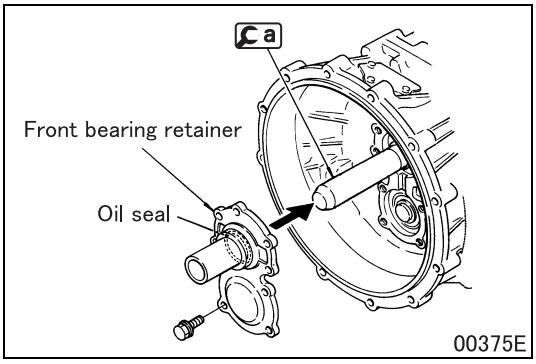

■ **Installation: Front bearing retainer**

- Install a on the drive pinion to protect the oil seal.
- Apply sealant to the clutch housing mounting surface of the front bearing retainer to install.

Shift rail and shift fork <M060>

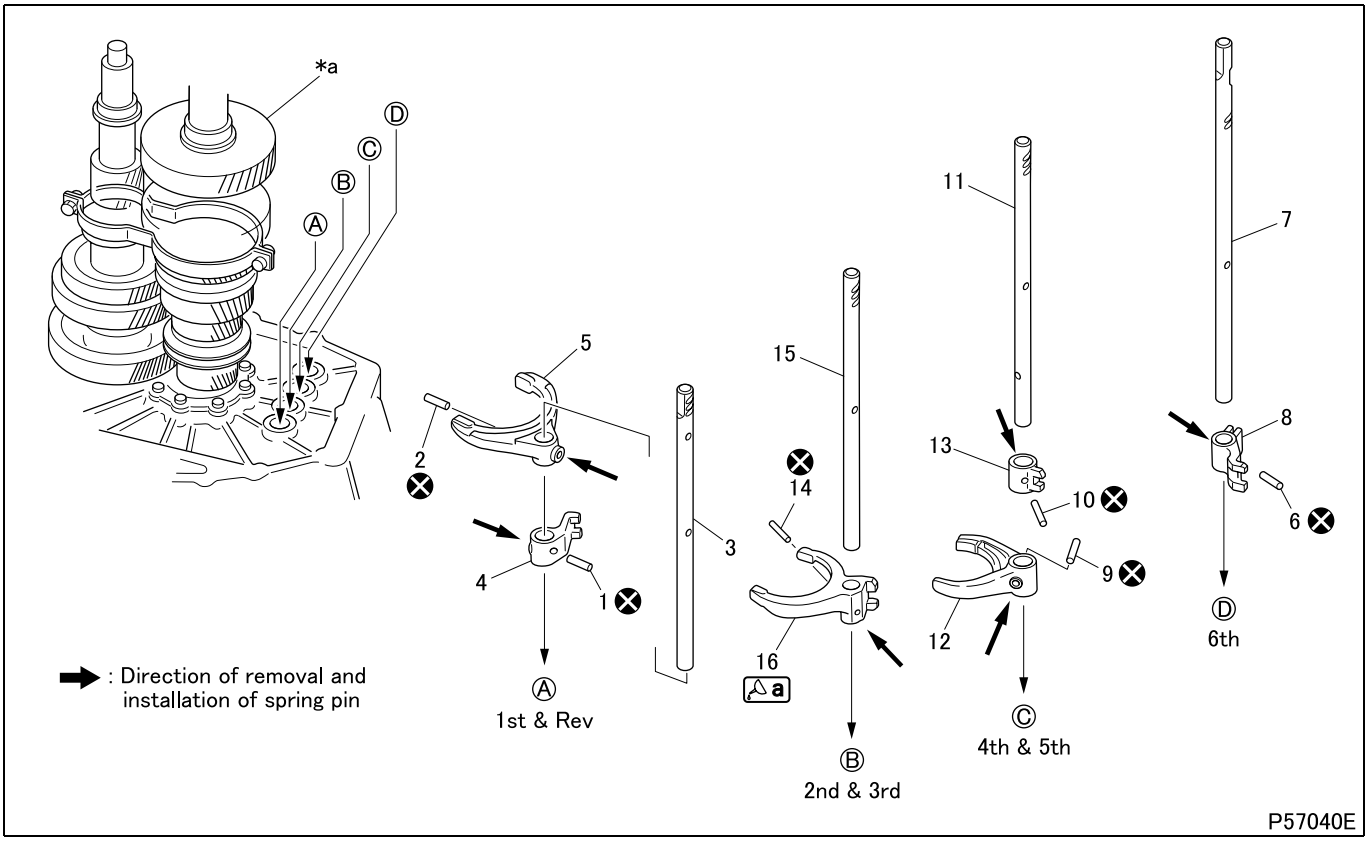

● Disassembly sequence

1 Spring pin
2 Spring pin
3 1st and reverse gear shift rail
4 1st and reverse gear shift rail jaw
5 1st and reverse gear shift fork
6 Spring pin
7 6th gear shift rail
8 6th gear shift rail jaw
9 Spring pin
10 Spring pin
11 4th and 5th gear shift rail
12 4th and 5th gear shift fork
13 4th and 5th gear shift rail jaw
14 Spring pin
15 2nd and 3rd gear shift rail
16 2nd and 3rd gear shift fork

***a**: Mainshaft
⊗: Non-reusable parts

CAUTION ⚠

- **Do not remove the spring pin for the 4th and 5th gear shift fork (aluminum made) unless replacing the gear shift fork or gear shift rail.**

● Assembly sequence

Follow the disassembly sequence in reverse.

Service standards (Unit: mm {in.})

Location	Maintenance item	Standard value	Limit	Remedy
3, 11, 15	Bend of gear shift rail	0 to 0.04 {0 to 0.0015}	0.08 {0.0031}	Replace
5, 12, 16	Tilt of gear shift fork claw	0 to 0.1 {0 to 0.0039}	0.2 {0.0079}	Replace
5, *a	Clearance between 1st and reverse gear shift fork and mainshaft synchronizer sleeve	0.3 to 0.5 {0.012 to 0.020}	1.0 {0.039}	Replace
7	Bend of 6th gear shift rail	0 to 0.05 {0 to 0.0019}	0.09 {0.0035}	Replace

Location	Maintenance item	Standard value	Limit	Remedy
12, *a	Clearance between 4th and 5th gear shift fork and mainshaft synchronizer sleeve	0.3 to 0.6 {0.012 to 0.024}	1.0 {0.039}	Replace
16, *a	Clearance between 2nd and 3rd gear shift fork and mainshaft synchronizer sleeve	0.2 to 0.4 {0.0079 to 0.016}	1.0 {0.039}	Replace

Lubricant and/or sealant

Mark	Points of application	Specified lubricant and/or sealant	Quantity
a	2nd and 3rd shift fork claw	Molykote BR2 plus	As required

◆Inspection procedure◆

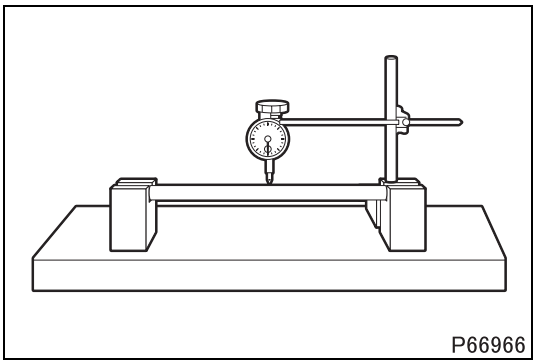
P66966

■ Inspection: Bend of shift rail

- Measure the extent of bending at the middle of each of gear shift rail.
- While rotating the gear shift rail by one revolution, read how much the dial gauge needle will move. A half of the reading observed represents the bend, if any, of the shaft.
- If measurement exceeds the limit, replace the gear shift rail.

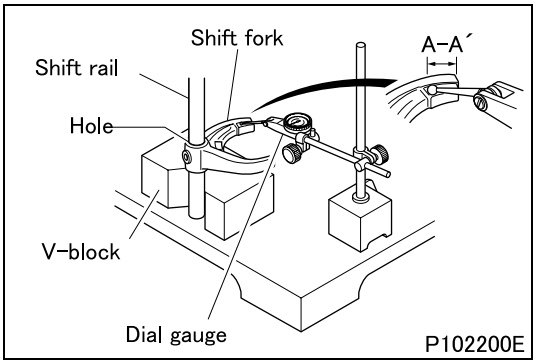

P102200E

■ Inspection: Tilt of gear shift fork claws

- Measure the tilt (difference between A and A´) of claw A-A´ against the gear shift rail hole of gear shift forks with pressing the rail to V-block and standing it vertically.
- If the measurement exceeds the limit, replace the gear shift forks.

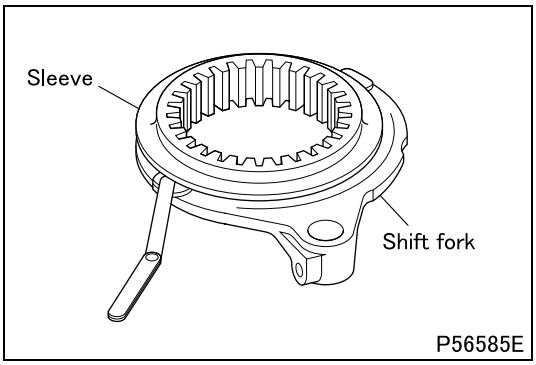

P56585E

■ Inspection: Clearance between gear shift fork and synchronizer sleeve of mainshaft

- If the measurement exceeds the limit, replace defective parts.

◆Installation procedure◆

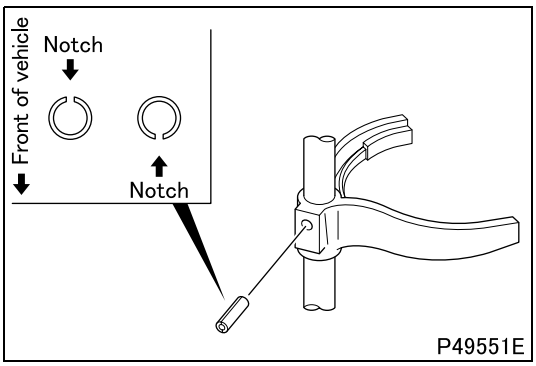

■ **Installation: Spring pin**

- Install the spring pin in the illustrated direction (the spring pin notch to be positioned forward or rearward of the vehicle). When installing the spring pin, leave 0 to 0.5 mm {0 to 0.020 in.} outside from each gear shift rail or each gear shift rail jaw.

CAUTION ⚠

- **Drive the spring pin carefully so as not to impose too much load on each gear shift rail and each gear shift rail jaw.**
- **The spring pin for the 4th and 5th gear shift fork is different in length from other spring pins.**

M E M O

Shift rail and shift fork <M070>

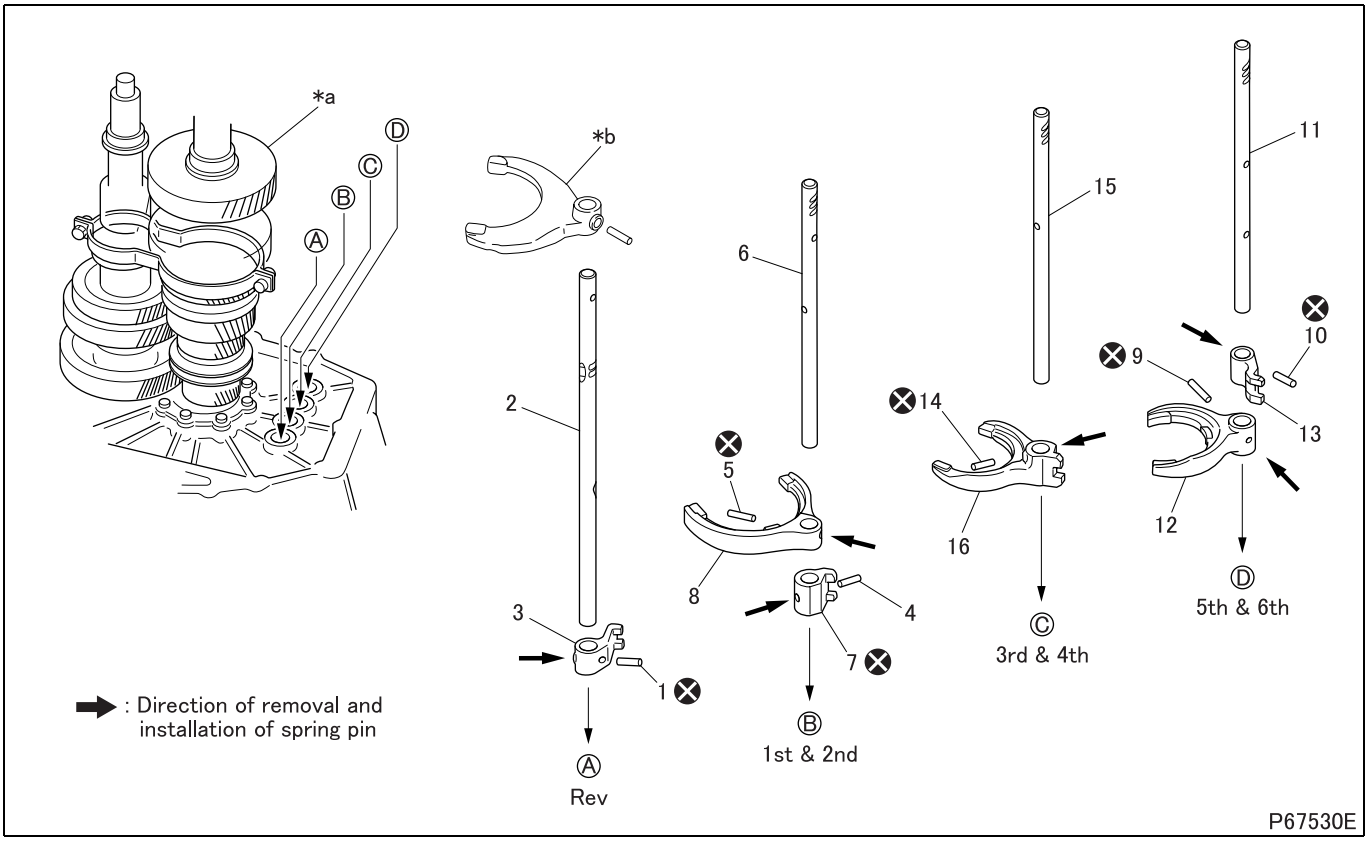

● **Disassembly sequence**

1 Spring pin
2 Reverse gear shift rail
3 Reverse gear shift rail jaw
4 Spring pin
5 Spring pin
6 1st and 2nd gear shift rail jaw
7 1st and 2nd gear shift rail
8 1st and 2nd gear shift fork
9 Spring pin
10 Spring pin
11 5th and 6th gear shift rail
12 5th and 6th gear shift fork
13 5th and 6th gear shift rail jaw
14 Spring pin
15 3rd and 4th gear shift rail
16 3rd and 4th gear shift fork

***a**: Mainshaft
***b**: Reverse gear shift fork (See reverse gear and reverse idler gear <M070>.)
⊗: Non-reusable parts

CAUTION ⚠

- **Do not remove the spring pins for the 1st and 2nd gear shift fork (aluminum made) and 5th and 6th gear shift fork (aluminum made) unless replacing the gear shift fork or gear shift rail.**

● **Assembly sequence**

Follow the disassembly sequence in reverse.

Service standards (Unit: mm {in.})

Location	Maintenance item		Standard value	Limit	Remedy
2, 7, 11, 15	Bend of gear shift rail	Reverse gear shift rail	0 to 0.05 {0 to 0.0020}	0.09 {0.0035}	Replace
		Except reverse gear shift rail	0 to 0.04 {0 to 0.0016}	0.07 {0.0028}	Replace
8, 12, 16, *b	Tilt of gear shift fork claw		0 to 0.1 {0 to 0.0039}	0.2 {0.0079}	Replace

Location	Maintenance item	Standard value	Limit	Remedy
8, *a	Clearance between 1st and 2nd gear shift fork and mainshaft synchronizer sleeve	0.3 to 0.5 {0.012 to 0.002}	1.0 {0.039}	Replace
12, *a	Clearance between 5th and 6th gear shift fork and mainshaft synchronizer sleeve	0.3 to 0.6 {0.012 to 0.024}	1.0 {0.039}	Replace
16, *a	Clearance between 3rd and 4th gear shift fork and mainshaft synchronizer sleeve	0.2 to 0.4 {0.0079 to 0.016}	1.0 {0.039}	Replace

◆Inspection procedure◆

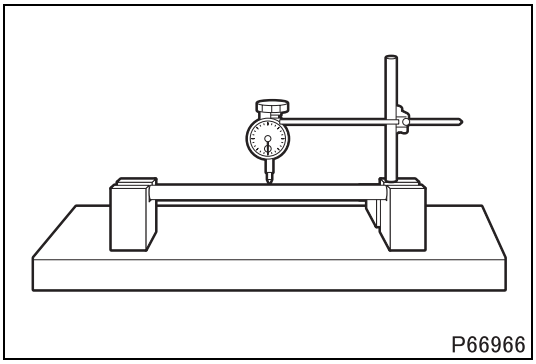

■ Inspection: Bend of shift rail

- Measure the extent of bending at the middle of each of gear shift rail.
- While rotating the gear shift rail by one revolution, read how much the dial gauge needle will move. A half of the reading observed represents the bend, if any, of the shaft.
- If measurement exceeds the limit, replace the gear shift rail.

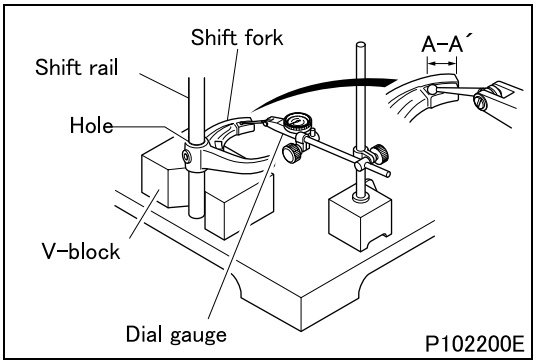

■ Inspection: Tilt of gear shift fork claws

- Measure the tilt (difference between A and A´) of claw A-A´ against the gear shift rail hole of gear shift forks with pressing the rail to V-block and standing it vertically.
- If the measurement exceeds the limit, replace the gear shift forks.

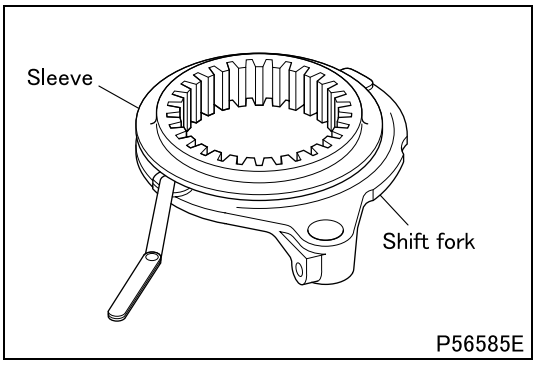

■ Inspection: Clearance between gear shift fork and synchronizer sleeve of mainshaft

- If the measurement exceeds the limit, replace defective parts.

◆Installation procedure◆

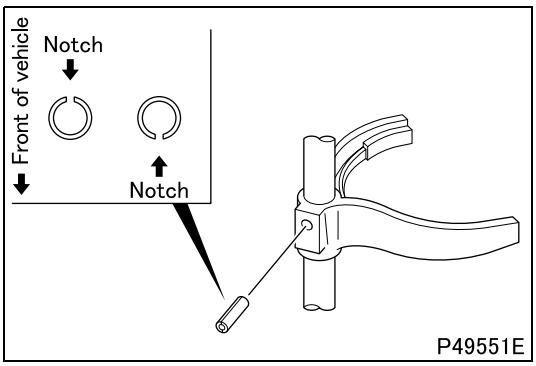

■ **Installation: Spring pin**

- Install the spring pin in the illustrated direction (the spring pin notch to be positioned forward or rearward of the vehicle). When installing the spring pin, leave 0 to 0.5 mm {0 to 0.02 in.} outside from each gear shift rail or each gear shift rail jaw.

CAUTION ⚠

- **Drive the spring pin carefully so as not to impose too much load on each gear shift rail and each gear shift rail jaw.**
- **The spring pins for the 1st and 2nd gear shift fork and the 5th and 6th gear shift fork are different in length from other spring pins.**

M E M O

DRIVE PINION

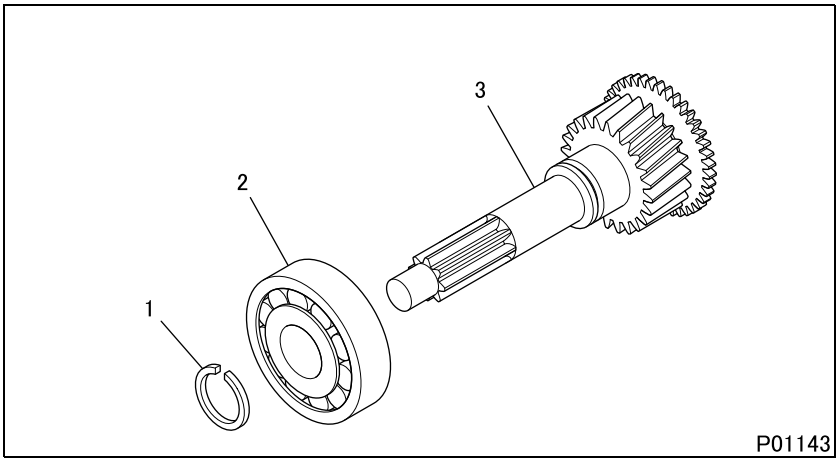

● **Disassembly sequence**

1 Snap ring
2 Drive pinion bearing
3 Drive pinion

⊗: Non-reusable parts

● **Assembly sequence**

Follow the disassembly sequence in reverse.

Special tools

Mark	Tool name and shape	Part No.	Application
a	Snap ring expander 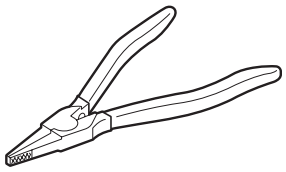 P01137	MH061268	Removal and installation of snap ring
b	Drive pinion bearing puller 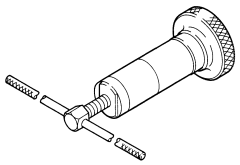 01138	*MH062440	Removal of drive pinion bearing
c	Drive pinion bearing installer 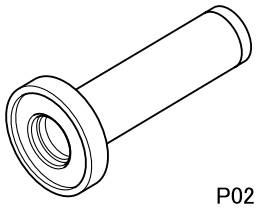 P02142	*ME624235	Installation of drive pinion bearing

*: Components of puller and installer kit (See puller and installer.)

◆Removal procedure◆

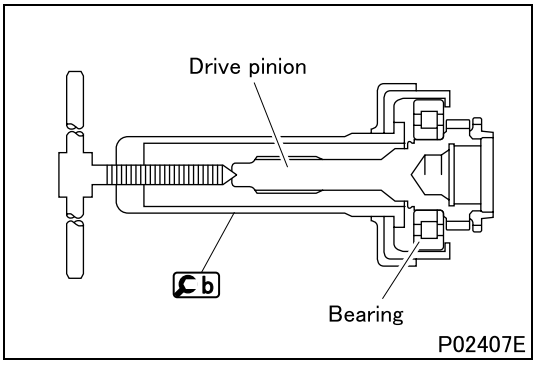

■ **Removal: Drive pinion bearing**

◆Installation procedure◆

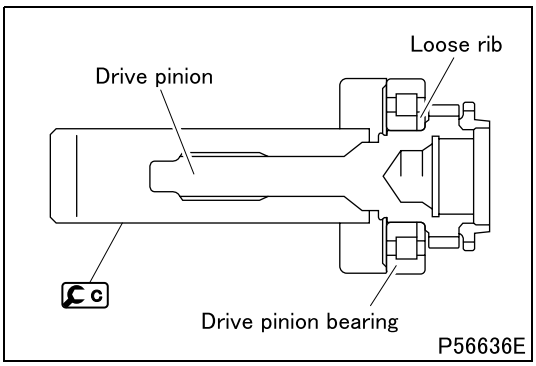

■ **Installation: Drive pinion bearing**

- Install the drive pinion bearing, facing the loose rib in the illustrated direction.

CAUTION ⚠

- **Be careful not to install the drive pinion bearing in the wrong direction. Otherwise, the bearing cannot be removed because the inner shaft of the bearing remains in the drive pinion during removal.**

MAINSHAFT <M060>

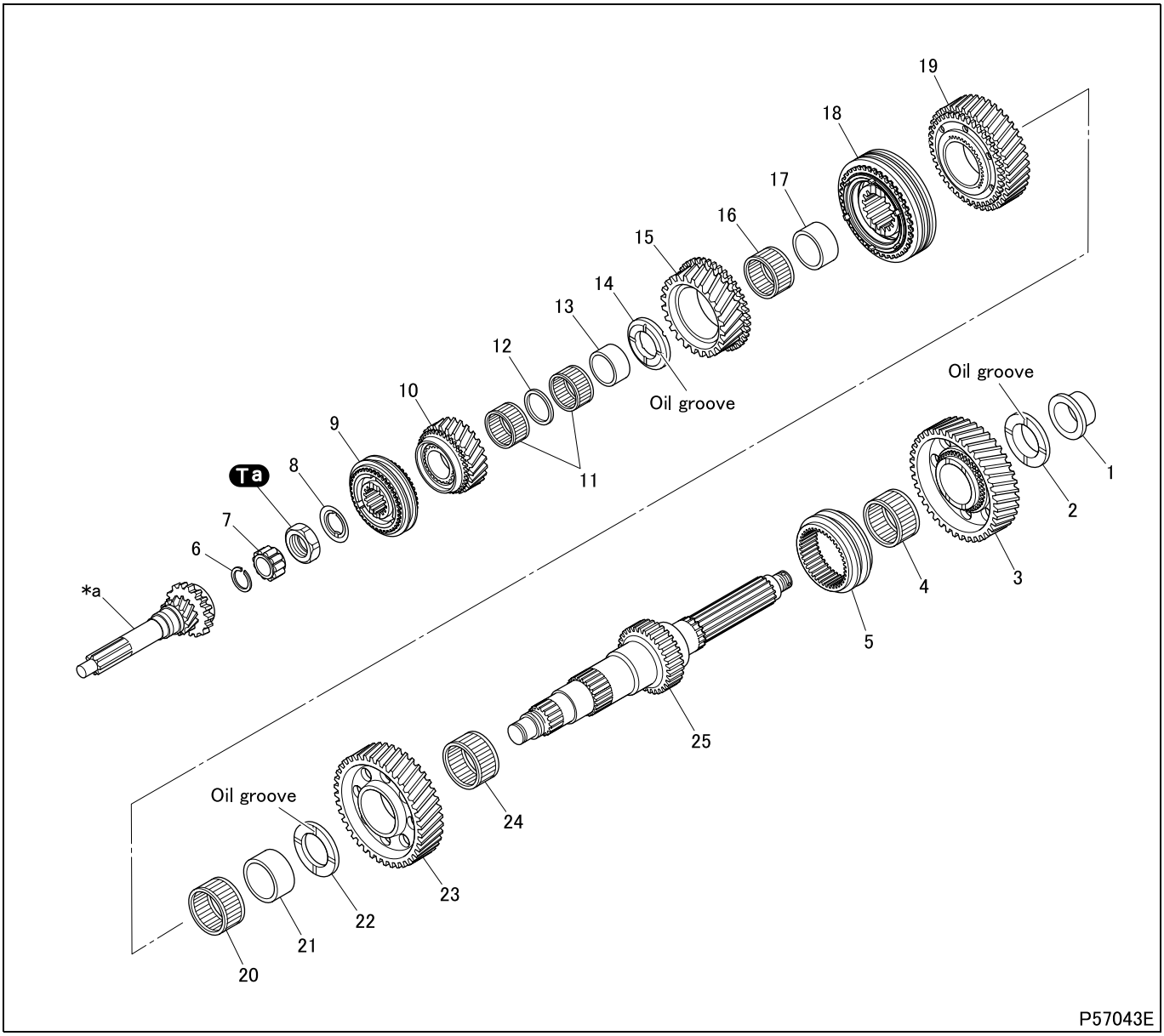

● **Disassembly sequence**

1 Mainshaft bearing inner race
2 Reverse gear thrust washer
3 Reverse gear
4 Needle bearing
5 Synchronizer sleeve
6 Snap ring
7 Pilot bearing
8 Lock washer
9 4th and 5th synchronizer (See later section.)
10 4th gear
11 Needle bearing
12 Bearing spacer
13 4th gear bearing sleeve
14 3rd gear thrust washer
15 3rd gear
16 Needle bearing
17 3rd gear bearing sleeve
18 2nd and 3rd synchronizer (See later section.)
19 2nd gear
20 Needle bearing
21 2nd gear bearing sleeve
22 1st gear thrust washer
23 1st gear
24 Needle bearing
25 Mainshaft

***a**: Drive pinion

● **Assembly sequence**

Follow the disassembly sequence in reverse.

Service standards (Unit: mm {in.})

Location	Maintenance item		Standard value	Limit	Remedy
–	End play	1st gear	0.15 to 0.35 {0.0059 to 0.014}	0.5 {0.020}	Replace
		2nd gear	0.15 to 0.35 {0.0059 to 0.014}	0.5 {0.020}	
		3rd gear	0.15 to 0.35 {0.0059 to 0.014}	0.5 {0.020}	
		4th gear	0.25 to 0.40 {0.0098 to 0.016}	0.5 {0.020}	
		Reverse gear	0.15 to 0.35 {0.0059 to 0.014}	0.5 {0.020}	
–	Play in the diameter direction	1st gear	0.05 to 0.08 {0.0020 to 0.0031}	0.12 {0.0047}	Replace
		2nd gear	0.04 to 0.08 {0.0016 to 0.0031}	0.12 {0.0047}	
		3rd gear	0.05 to 0.08 {0.0020 to 0.0031}	0.12 {0.0047}	
		4th gear	0.05 to 0.08 {0.0020 to 0.0031}	0.12 {0.0047}	
		Reverse gear	0.05 to 0.08 {0.0020 to 0.0031}	0.12 {0.0047}	
–	Outer diameter of gear bearing sleeve	4th gear bearing sleeve	53.957 to 53.970 {2.124 to 2.125}	53.9 {2.122}	Replace
		3rd gear bearing sleeve	67.954 to 67.967 {2.675 to 2.676}	67.9 {2.673}	
		2nd gear bearing sleeve	70.957 to 70.970 {2.793 to 2.794}	70.9 {2.791}	
–	Clearance between gear and synchronizer ring	4th gear synchronizer	1.48 to 1.77 {0.058 to 0.070}	0.2 {0.0079}	Replace
		Drive pinion and 4th and 5th synchronizer	1.48 to 1.77 {0.058 to 0.070}	0.2 {0.0079}	
		3rd gear and 2nd and 3rd synchronizer	1.21 to 1.79 {0.048 to 0.070}	0.2 {0.0079}	
		2nd gear and 2nd and 3rd synchronizer	1.21 to 1.79 {0.048 to 0.070}	0.2 {0.0079}	
5, 25	Play in the rotation direction of synchronizer sleeve and spline of mainshaft		0.052 to 0.148 {0.0020 to 0.0058}	0.3 {0.012}	Replace
7	Play in the diameter direction pilot bearing		–	0.12 {0.0047}	Replace

Tightening torque (Unit: N·m {ft.lbs, kgf·m})

Mark	Parts to be tightened	Tightening torque	Remarks
Ta	Lock nut	245 {180, 25}	–

Special tools (Unit: mm {in.})

Mark	Tool name and shape	Part No.	Application
ⓒa	Snap ring expander 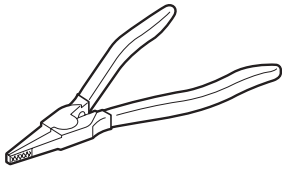 P01137	MH061268	Removal and installation of snap ring
ⓒb	Gear puller 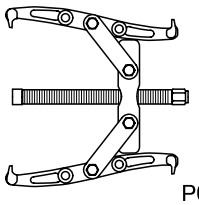 P01148	MH062308	Removal of mainshaft rear bearing inner race and each bearing sleeve
ⓒc	Pilot bearing puller 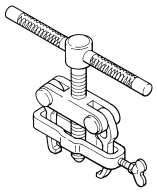 01146	MH061043	Removal of pilot bearing
ⓒd	Pilot bearing installer A: ϕ86 {3.39} B: ϕ57.5 {2.26} 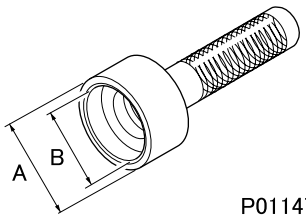 P01147	*ME624236	Installation of pilot bearing
ⓒe	Single spanner A: 46 {1.81} 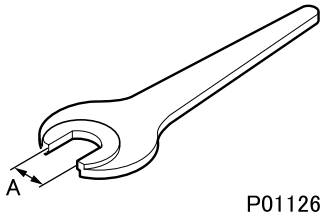 P01126	MH061555	Removal and installation of lock nut

*: Components of puller and installer kit (See puller and installer.)

◆Work before removal◆

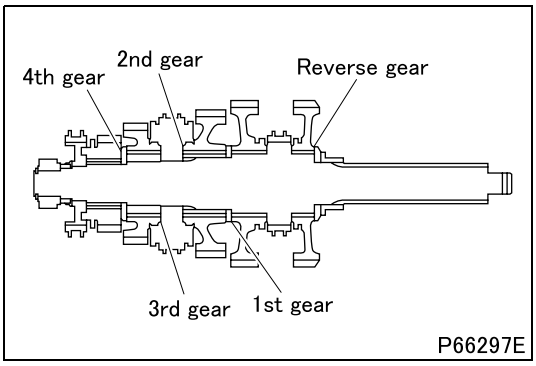

P66297E

■ Inspection: End play of each gear

- Measure the end play using feeler gauge.
- If the measurement exceeds the limit, replace defective parts.

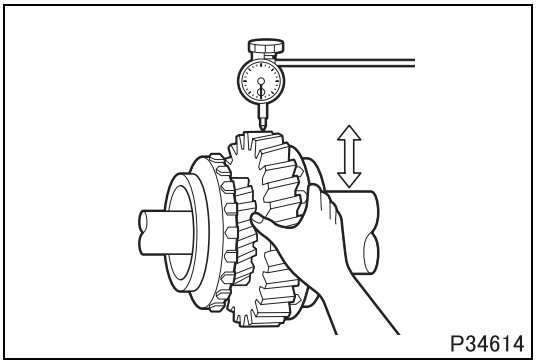

■ **Inspection: Play of gears in diameter direction**

- If the measurement exceeds the limit, replace defective parts.

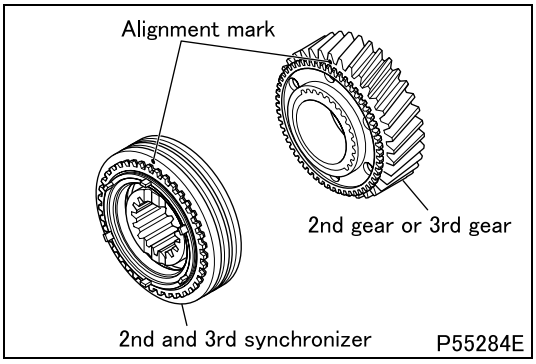

■ **Alignment marks: 2nd gear, 2nd and 3rd synchronizer and 3rd gear**

- Put alignment marks on the 2nd gear, synchronizer sleeve of the 2nd and 3rd synchronizer and 3rd gear, each at one location before disassembly.

◆Removal procedure◆

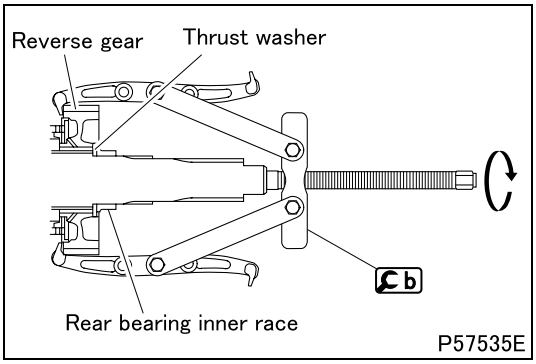

■ **Removal: Mainshaft rear bearing inner race**

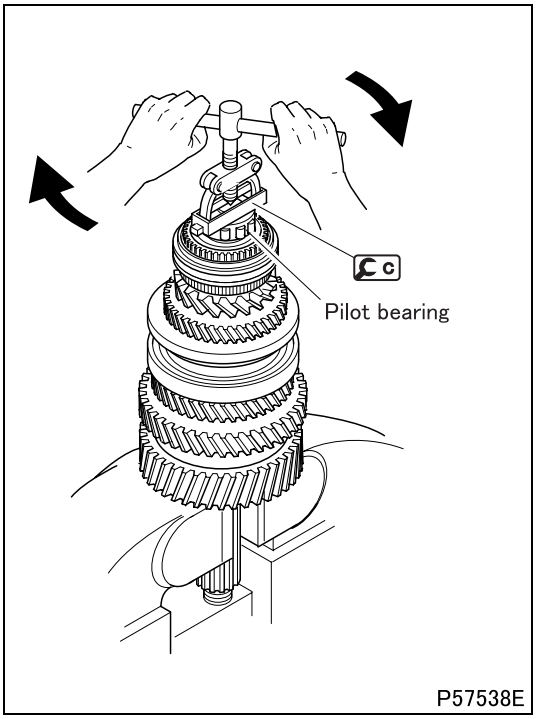

■ **Removal: Pilot bearing**

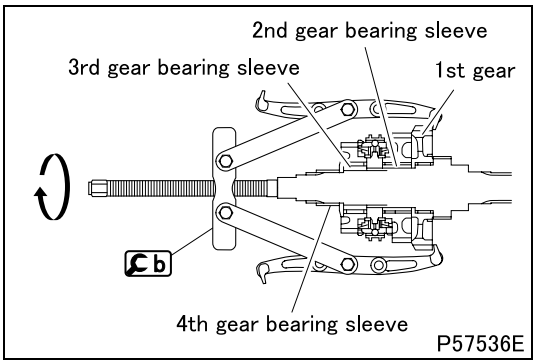

■ **Removal: 4th gear bearing sleeve, 3rd gear bearing sleeve and 2nd gear bearing sleeve**

◆Inspection procedure◆

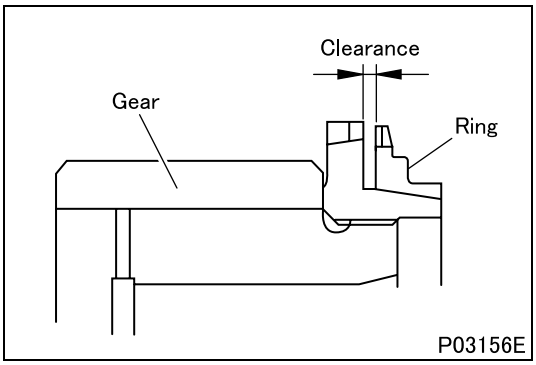

■ **Inspection: Clearance between synchronizer ring of 4th and 5th synchronizer and 4th gear or drive pinion**

- Conduct a measurement on the entire circumference while pressing each synchronizer ring against gears evenly.
- If the measurement is less than the limit, replace both ring and gear.

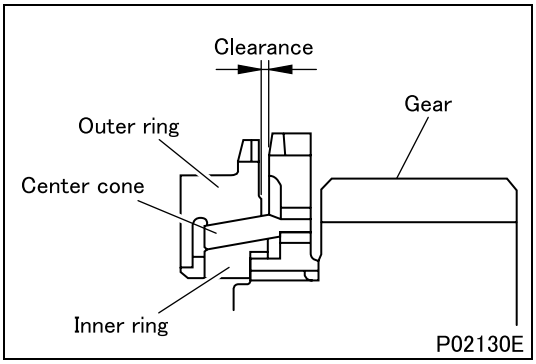

■ **Inspection: Clearance between synchronizer outer ring of 2nd and 3rd synchronizer and 2nd gear or 3rd gear**

- When measuring the clearance, press each ring and the center cone evenly against the gear and measure all around the circumference.
- If the measurement is less than the limit, replace both ring and gear.

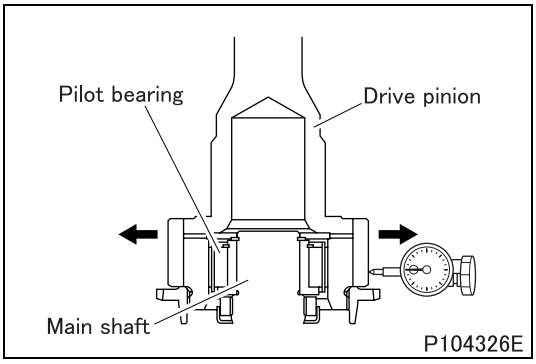

■ **Inspection: Play of pilot bearing in diameter direction**

- Carry out the measurement with installing the drive pinion, pilot bearing and main shaft and holding the main shaft as illustrated.
- Measure the play with moving the gear of drive pinion in diameter direction.
- If the measurement exceeds the limit, replace the pilot bearing.

◆Installation procedure◆

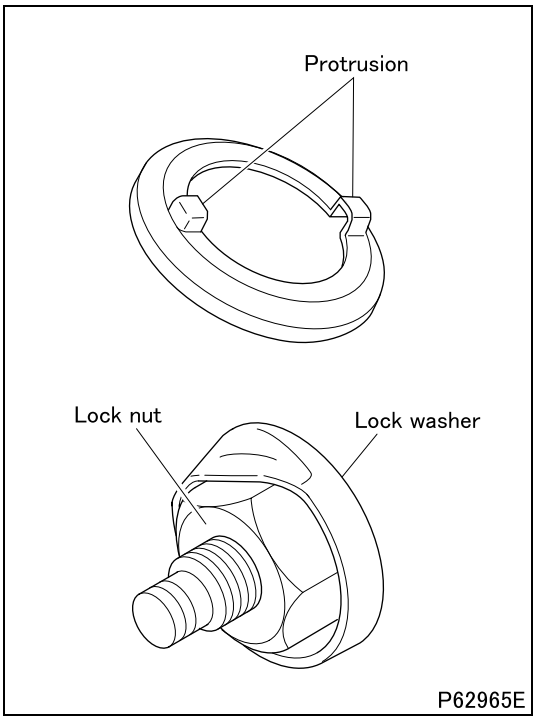

■ **Installation: Lock washer**

- Install so that protrusions of the lock washer fit into the grooves of the synchronizer hub of the 4th and 5th synchronizer.
- After tightening the lock nut to the specified torque, secure it by bending the lock washer.

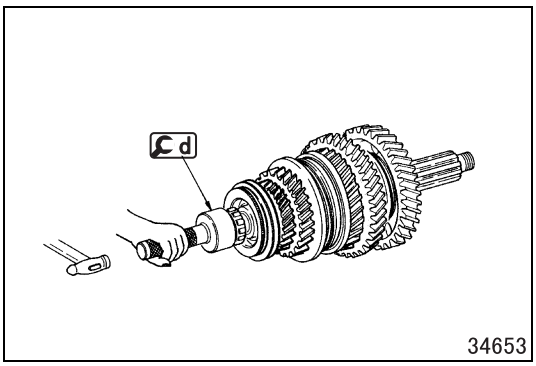

■ **Installation: Pilot bearing**

M E M O

4th and 5th synchronizer

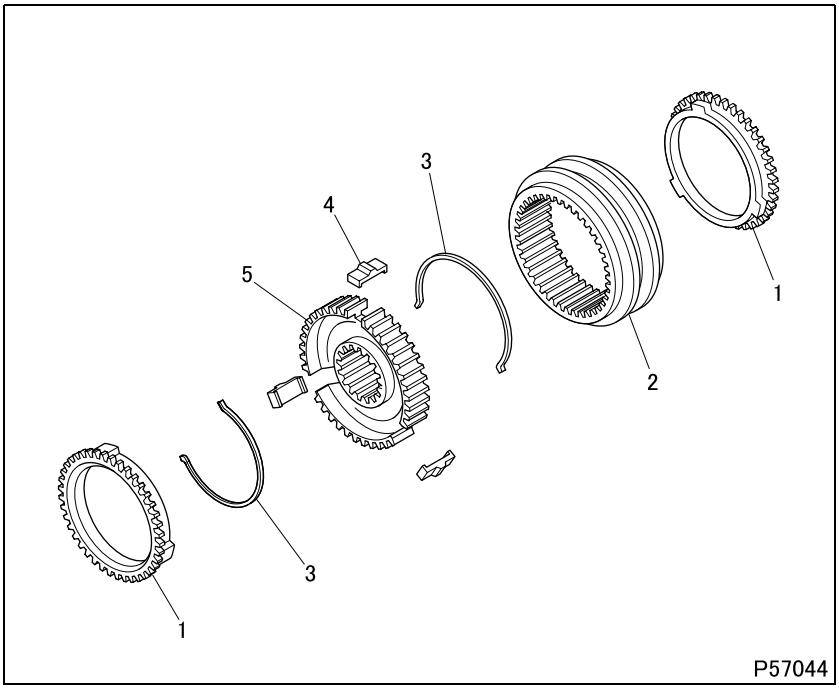

● Disassembly sequence

1 Synchronizer ring
2 Synchronizer sleeve
3 Shifting key spring
4 Shifting key
5 Synchronizer hub

● Assembly sequence

Follow the disassembly sequence in reverse.

Service standards (Unit: mm {in.})

Location	Maintenance item	Standard value	Limit	Remedy
1, 4	Clearance between synchronizer ring keyway and shifting key	4.75 to 4.95 {0.187 to 0.195}	5.8 {0.23}	Replace
2, 5	Play in the rotation direction of synchronizer sleeve and synchronizer hub	0.052 to 0.148 {0.0020 to 0.0058}	0.3 {0.012}	Replace
4, 5	Clearance between shifting key and synchronizer hub keyway	0.05 to 0.20 {0.0020 to 0.0079}	0.5 {0.020}	Replace

◆Work before removal◆

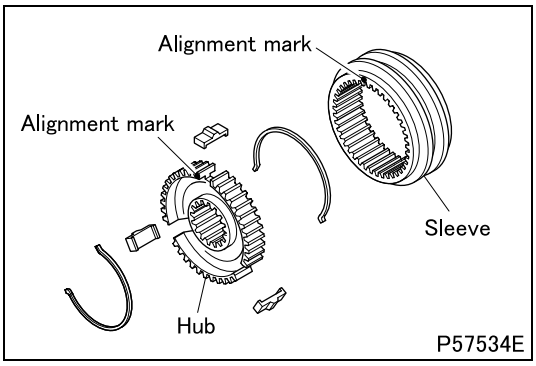

■Alignment marks: Synchronizer sleeve and synchronizer hub

- Put alignment marks on the synchronizer sleeve and synchronizer hub, each at one location before disassembly.

◆Inspection procedure◆

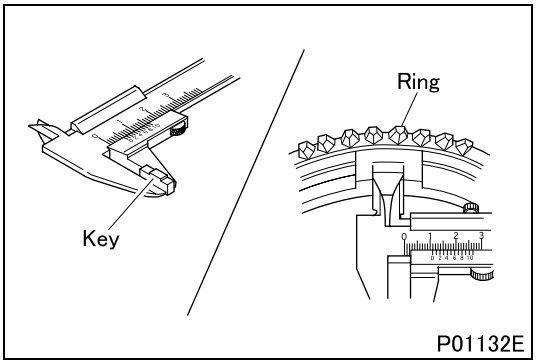

■Inspection: Clearance between synchronizer ring keyway and shifting key

- If measurement exceeds the limit, replace defective parts.

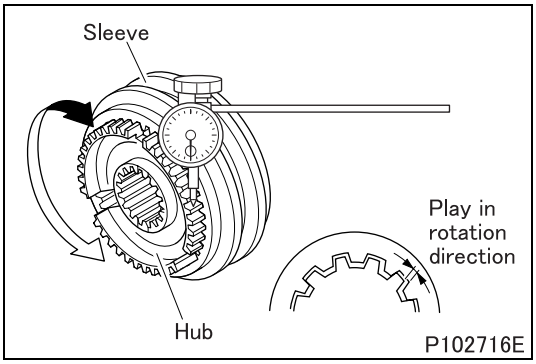

■ **Inspection: Play of synchronizer sleeve and synchronizer hub in rotation direction**

- Hold the synchronizer sleeve and measure the play with rotating the synchronizer hub.
- If the measurement exceeds the limit, replace defective parts.

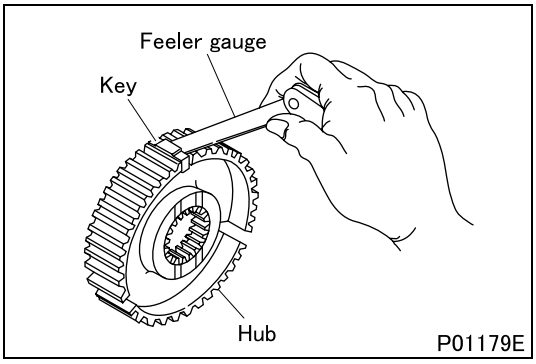

■ **Inspection: Clearance between shifting key and synchronizer hub keyway**

- If measurement exceeds the limit, replace defective parts.

◆Installation procedure◆

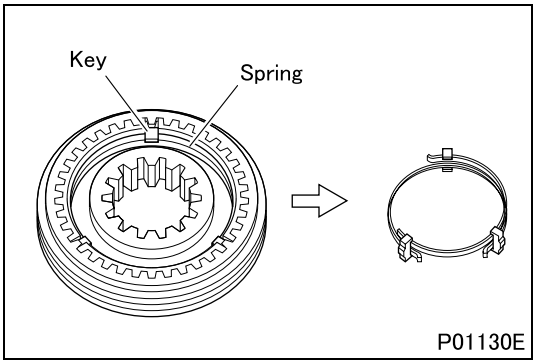

■ **Installation: Shifting key spring**

- After inserting the shifting key into the synchronizer hub groove, install the shifting key spring so that its opening is not located at the shifting key position.
- Install so that openings of the two shifting key springs are not located at the same position.

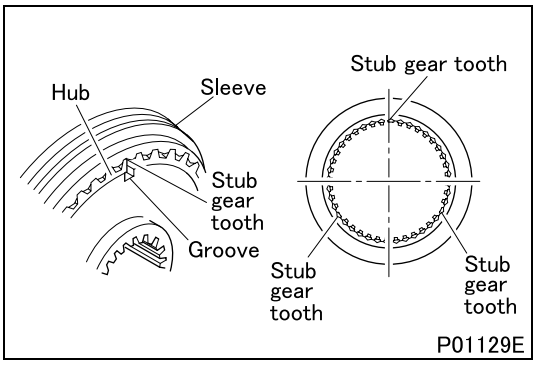

■ **Installation: Synchronizer sleeve and synchronizer hub**

- When replacing the synchronizer sleeve or synchronizer hub with a new one, align the plunger grooves (three locations) of the synchronizer hub with stub gear teeth (three locations) of the synchronizer sleeve to install.

2nd and 3rd synchronizer

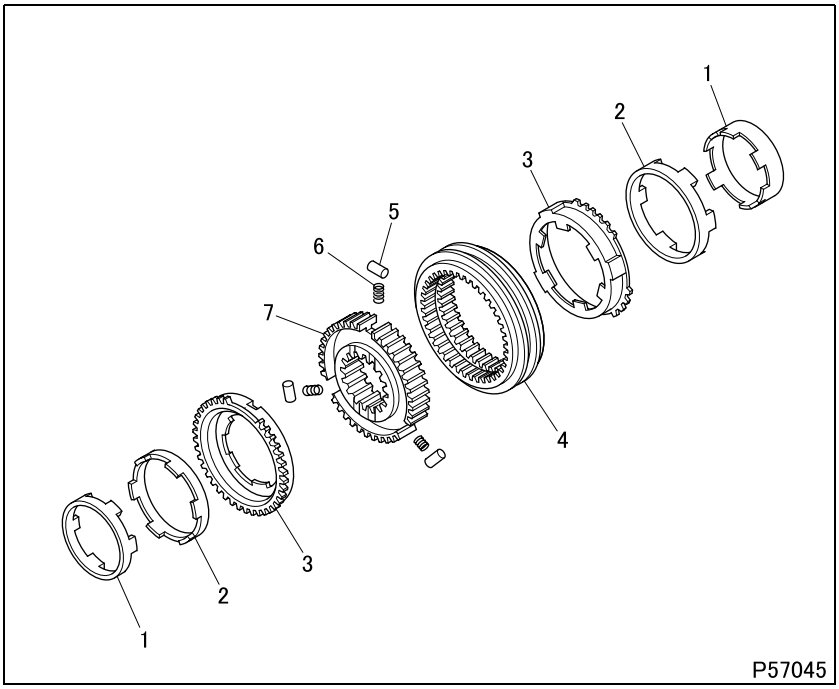

● Disassembly sequence

1 Synchronizer inner ring
2 Synchronizer center cone
3 Synchronizer outer ring
4 Synchronizer sleeve
5 Shifting pin
6 Synchronizer spring
7 Synchronizer hub

● Assembly sequence

Follow the disassembly sequence in reverse.

Service standards (Unit: mm {in.})

Location	Maintenance item	Standard value	Limit	Remedy
3, 7	Clearance between protrusions of synchronizer outer ring and synchronizer hub groove	4.8 to 5.4 {0.19 to 0.21}	6.5 {0.26}	Replace
4, 7	Play in the rotation direction of synchronizer sleeve and synchronizer hub	0.052 to 0.148 {0.0020 to 0.0058}	0.3 {0.012}	Replace

◆Work before removal◆

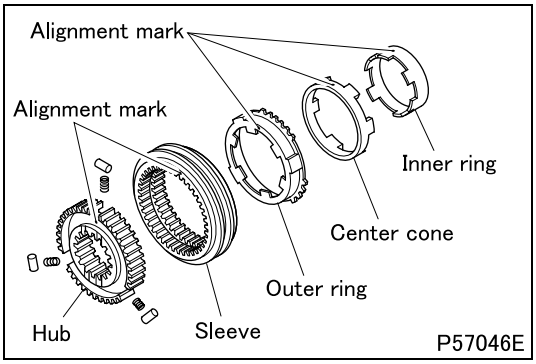

■Alignment marks: Synchronizer inner ring, center cone, outer ring and hub

- Put alignment marks on the synchronizer inner ring, center cone, outer ring and hub, each at one location, aligning with the alignment mark put on the synchronizer sleeve before disassembly.

◆Inspection procedure◆

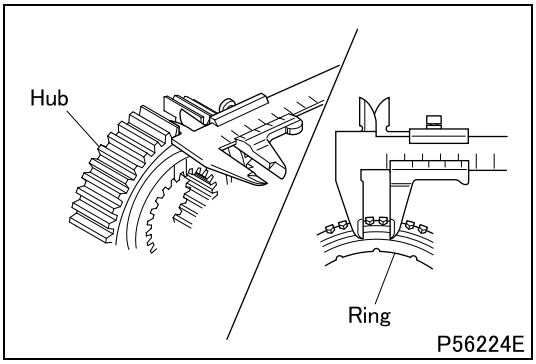

■ Inspection: Clearance between synchronizer outer ring protrusion and synchronizer hub groove

- If the measurement exceeds the limit, replace defective parts.

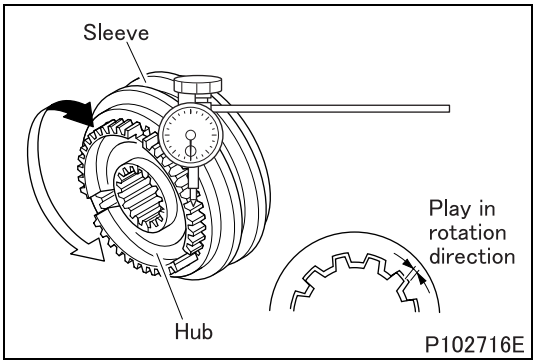

■ **Inspection: Play of synchronizer sleeve and synchronizer hub in rotation direction**

- Hold the synchronizer sleeve and measure the play with rotating the synchronizer hub.
- If the measurement exceeds the limit, replace defective parts.

◆Installation procedure◆

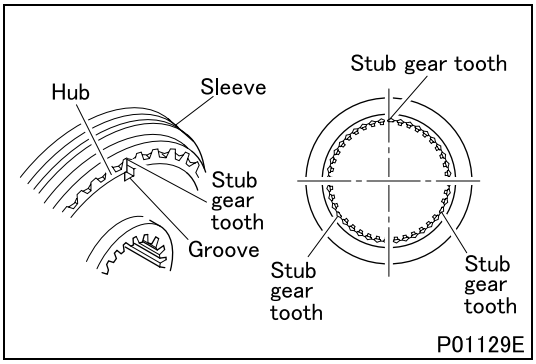

■ **Installation: Synchronizer sleeve and synchronizer hub**

- When replacing the synchronizer sleeve or synchronizer hub with a new one, align the plunger grooves (three locations) of the synchronizer hub with stub gear teeth (three locations) of the synchronizer sleeve to install.

MAINSHAFT <M070>

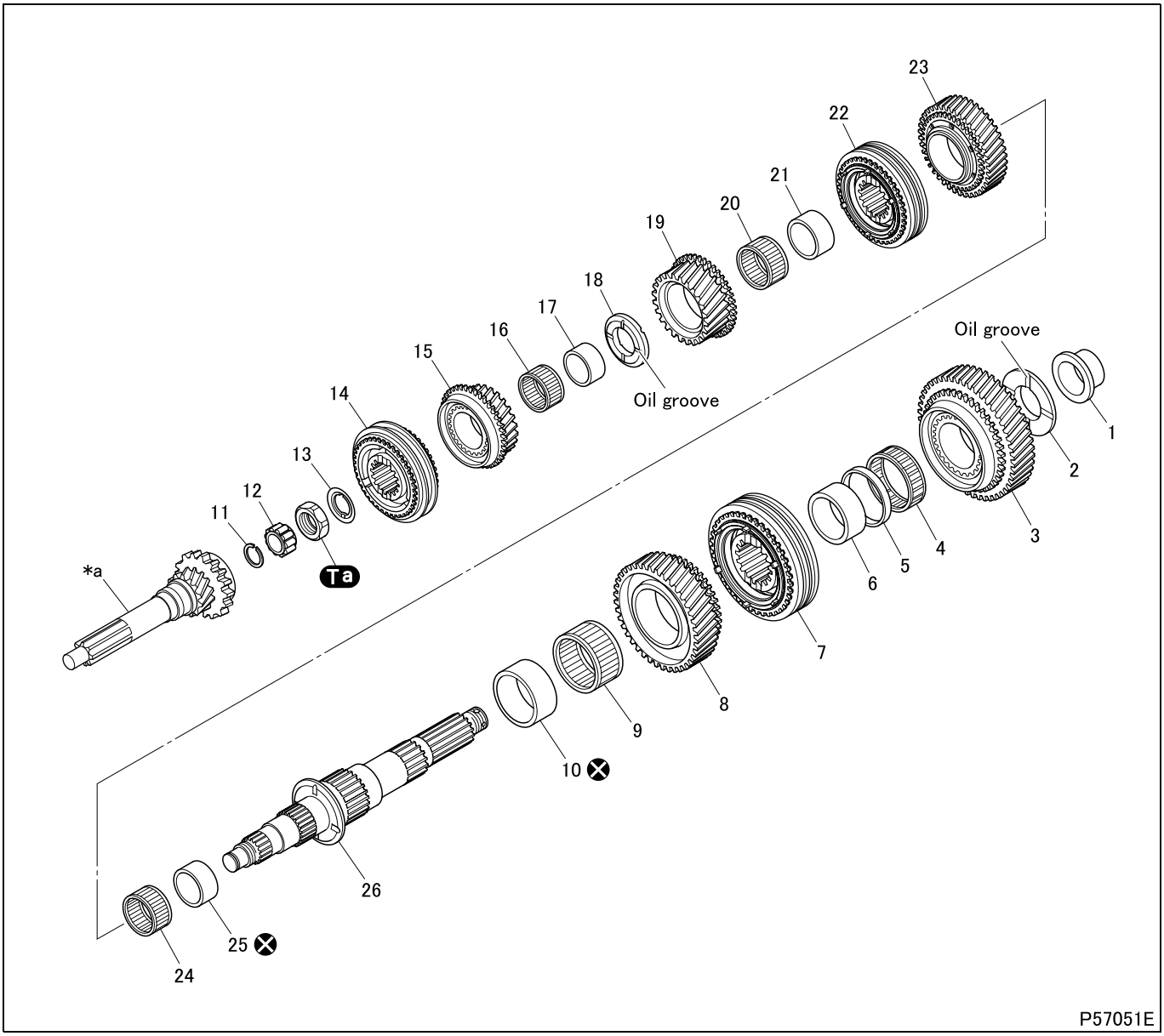

● **Disassembly sequence**

1 Mainshaft rear bearing inner race
2 1st gear thrust washer
3 1st gear
4 Needle bearing
5 Bearing spacer
6 1st gear bearing sleeve
7 2nd synchronizer (See later section.)
8 2nd gear
9 Needle bearing
10 2nd gear bearing sleeve
11 Snap ring
12 Pilot bearing
13 Lock washer
14 5th and 6th synchronizer (See later section.)
15 5th gear
16 Needle bearing
17 5th gear bearing sleeve
18 4th gear thrust washer
19 4th gear
20 Needle bearing
21 4th gear bearing sleeve
22 3rd and 4th synchronizer (See later section.)
23 3rd gear
24 Needle bearing
25 3rd gear bearing sleeve
26 Mainshaft

***a**: Drive pinion
⊗: Non-reusable parts

CAUTION ⚠

- **Do not remove 2nd gear bearing sleeve and 3rd gear bearing sleeve except for replacement.**

● Assembly sequence

Follow the disassembly sequence in reverse.

Service standards (Unit: mm {in.})

Location	Maintenance item		Standard value	Limit	Remedy
–	End play	1st gear	0.35 to 0.55 {0.014 to 0.022}	0.75 {0.030}	Replace
		2nd gear	0.35 to 0.55 {0.014 to 0.022}	0.75 {0.030}	
		3rd gear	0.15 to 0.35 {0.0059 to 0.014}	0.55 {0.022}	
		4th gear	0.15 to 0.35 {0.0059 to 0.014}	0.55 {0.022}	
		5th gear	0.25 to 0.40 {0.0098 to 0.016}	0.6 {0.024}	
–	Play in the diameter direction	1st gear	0.05 to 0.09 {0.0020 to 0.0035}	0.10 {0.0039}	Replace
		2nd gear	0.04 to 0.09 {0.0016 to 0.0035}	0.10 {0.0039}	
		3rd gear	0.05 to 0.08 {0.0020 to 0.0031}	0.10 {0.0039}	
		4th gear	0.05 to 0.08 {0.0020 to 0.0031}	0.10 {0.0039}	
		5th gear	0.05 to 0.08 {0.0020 to 0.0031}	0.10 {0.0039}	
–	Outer diameter of gear bearing sleeve	1st gear bearing sleeve	95.957 to 95.970 {3.777 to 3.778}	95.9 {3.775}	Replace
		2nd gear bearing sleeve	94.954 to 94.967 {3.738 to 3.739}	94.9 {3.736}	
		5th gear bearing sleeve	59.957 to 59.970 {2.360 to 2.361}	59.9 {2.358}	
		4th gear bearing sleeve	70.957 to 70.970 {2.793 to 2.794}	70.9 {2.791}	
		3rd gear bearing sleeve	70.957 to 70.970 {2.793 to 2.794}	70.9 {2.791}	
–	Clearance between gear and synchronizer ring	2nd gear and 2nd synchronizer	1.21 to 1.79 {0.0048 to 0.0070}	0.2 {0.0079}	Replace
		5th gear and 5th and 6th synchronizer	1.49 to 1.86 {0.0059 to 0.0073}	0.2 {0.0079}	
		Drive pinion and 5th and 6th synchronizer	1.49 to 1.86 {0.0059 to 0.0073}	0.2 {0.0079}	
		4th gear and 3rd and 4th synchronizer	1.21 to 1.79 {0.0048 to 0.0070}	0.2 {0.0079}	
		3rd gear and 3rd and 4th synchronizer	1.21 to 1.79 {0.0048 to 0.0070}	0.2 {0.0079}	
12	Play in radial direction of pilot bearing		–	0.12 {0.0047}	Replace

Tightening torque (Unit: N·m {ft.lbs, kgf·m})

Mark	Parts to be tightened	Tightening torque	Remarks
Ta	Lock nut	314 {230, 32}	–

Special tools (Unit: mm {in.})

Mark	Tool name and shape	Part No.	Application
a	Snap ring expander 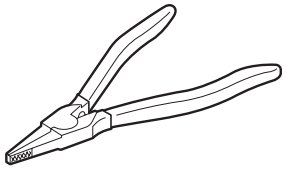 P01137	MH061268	Removal and installation of snap ring
b	Gear puller 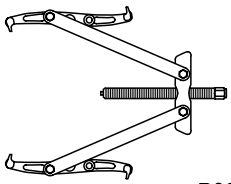 P03160	MH062250	Removal of mainshaft rear bearing inner race and each bearing sleeve
c	Pilot bearing puller 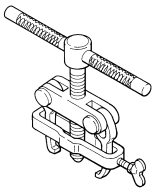 01146	MH061043	Removal of pilot bearing
d	Pilot bearing installer A: ϕ75 {2.95} B: ϕ65 {2.56} 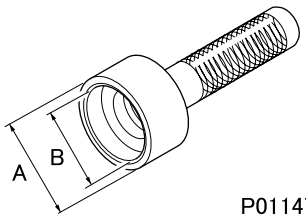 P01147	*MH062628	Installation of pilot bearing
e	Single spanner A: 50 {1.97} 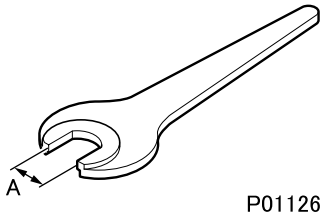 P01126	MH063101	Removal and installation of lock nut

*: Components of puller and installer kit (See puller and installer.)

◆Work before removal◆

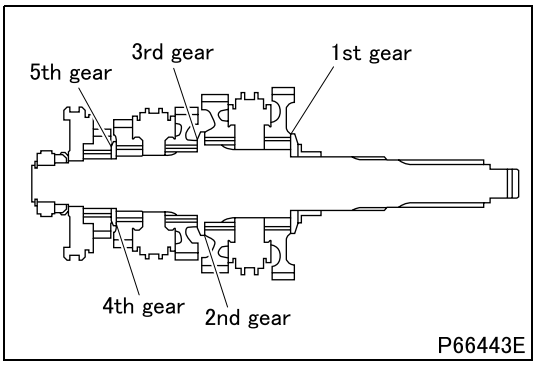

P66443E

■ Inspection: End play of each gear

- Measure the end play using feeler gauge.
- If the measurement exceeds the limit, replace defective parts.

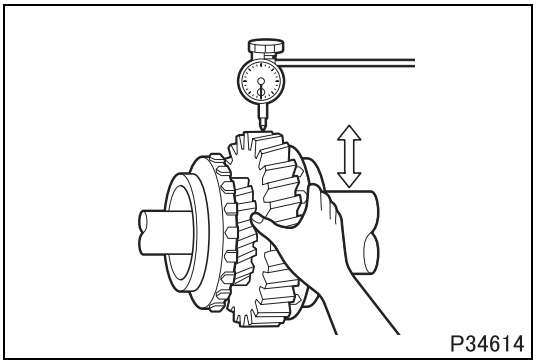

■ **Inspection: Play of gears in diameter direction**

- If the measurement exceeds the limit, replace defective parts.

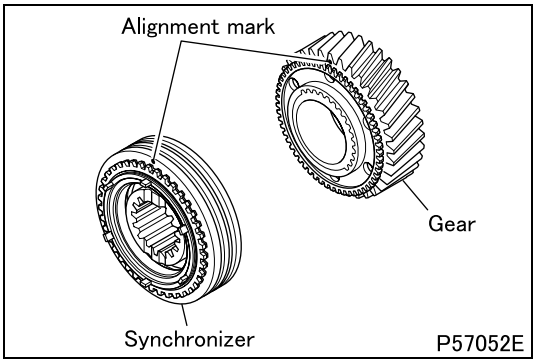

■ **Alignment marks: 2nd gear, 2nd synchronizer, 3rd gear, and 3rd and 4th synchronizer and 4th gear**

- Put alignment marks on each gear and each synchronizer sleeve of the synchronizer, each at one location before disassembly.

◆Removal procedure◆

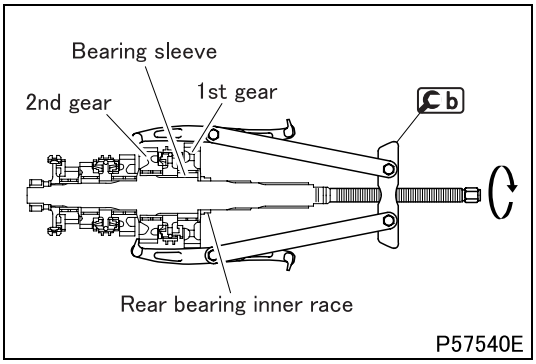

■ **Removal: Mainshaft rear bearing inner race and 1st gear bearing sleeve**

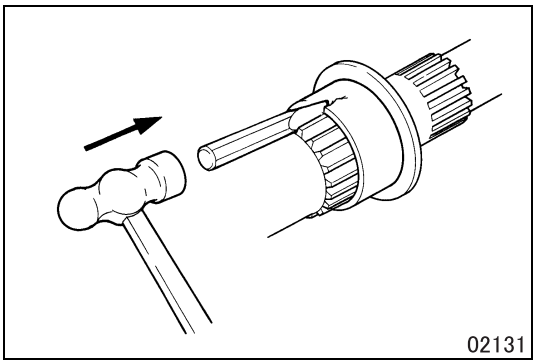

■ **Removal: 2nd gear bearing sleeve**

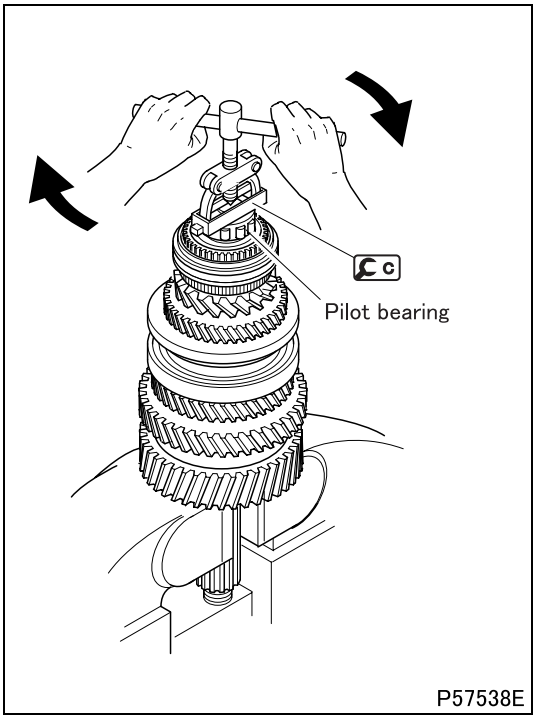

■ **Removal: Pilot bearing**

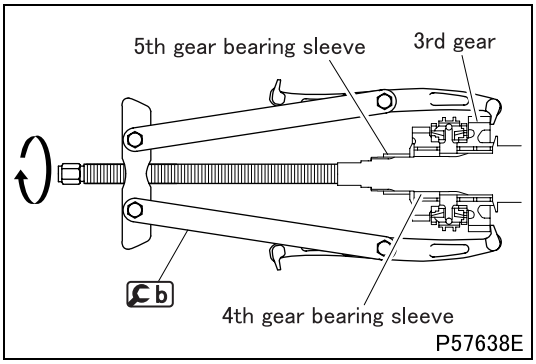

■ **Removal: 5th gear bearing sleeve and 4th gear bearing sleeve**

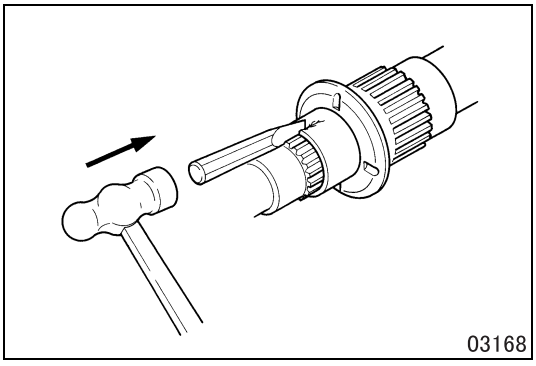

■ **Removal: 3rd gear bearing sleeve**

◆Inspection procedure◆

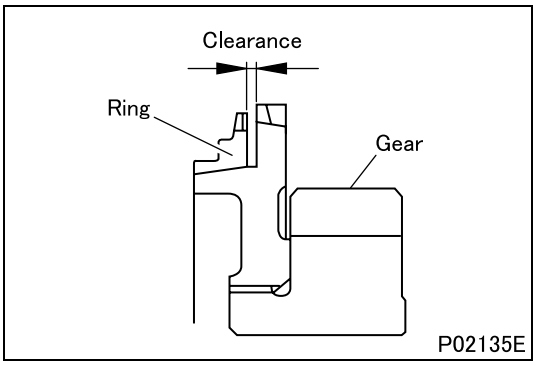

■ Inspection: Clearance between synchronizer ring of 5th and 6th synchronizer and 5th gear or drive pinion

- When measuring the clearance, press each ring evenly against the gear and measure all around the circumference.
- If the measurement is less than the limit, replace the ring together with gear or drive pinion.

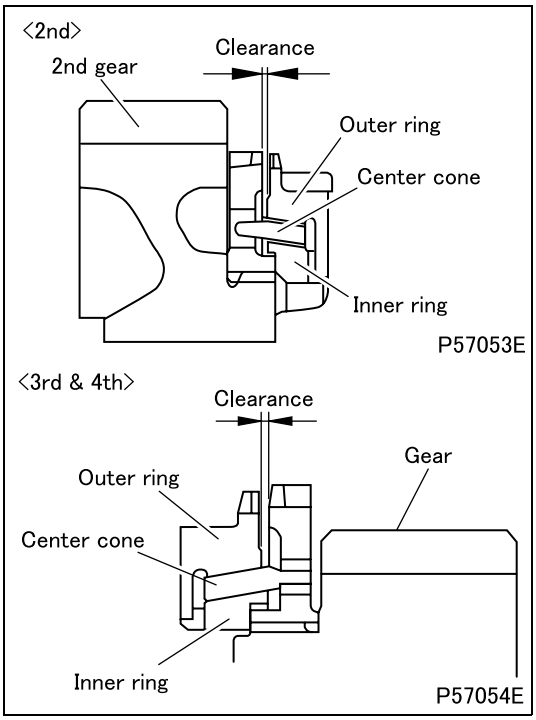

■ Inspection: Clearance between each gear and synchronizer outer ring of each synchronizer

- When measuring the clearance, press each synchronizer ring and center cone evenly against the gear and measure all around the circumference.
- If the measurement is less than the limit, replace both ring and gear.

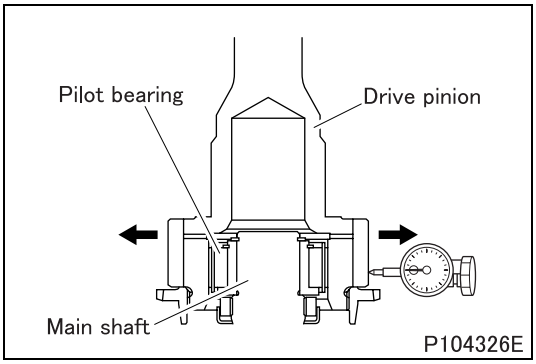

■ Inspection: Play of pilot bearing in diameter direction

- Carry out the measurement with installing the drive pinion, pilot bearing and main shaft and holding the main shaft as illustrated.
- Measure the play with moving the gear of drive pinion in diameter direction.
- If the measurement exceeds the limit, replace the pilot bearing.

◆Installation procedure◆

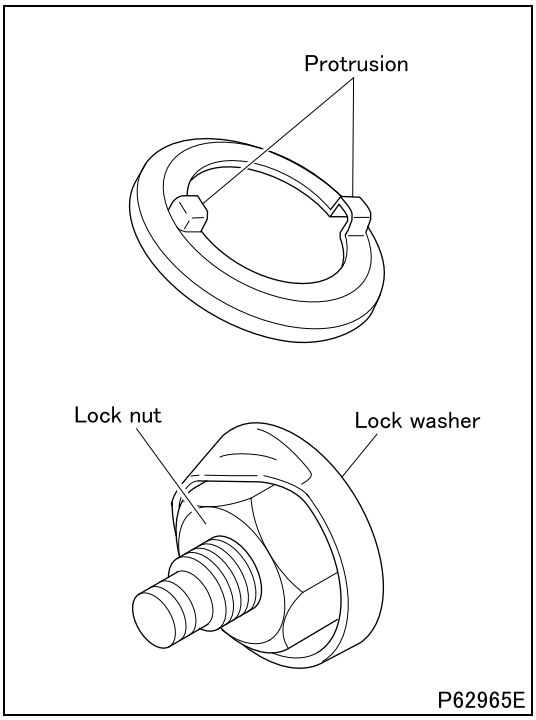

■ Installation: Lock washer

- Install so that protrusions of the lock washer fit into the grooves of the synchronizer hub of the 5th and 6th synchronizer.
- After tightening the lock nut to the specified torque, secure it by bending the lock washer.

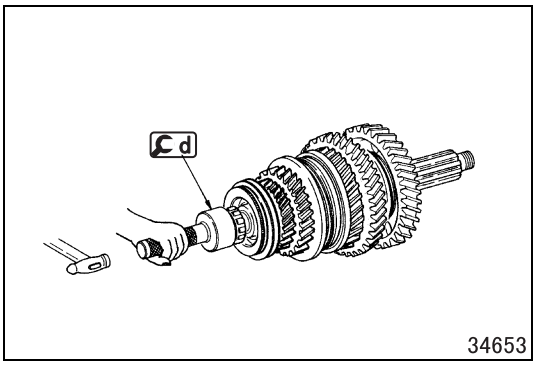

■ Installation: Pilot bearing

2nd synchronizer and 3rd and 4th synchronizer

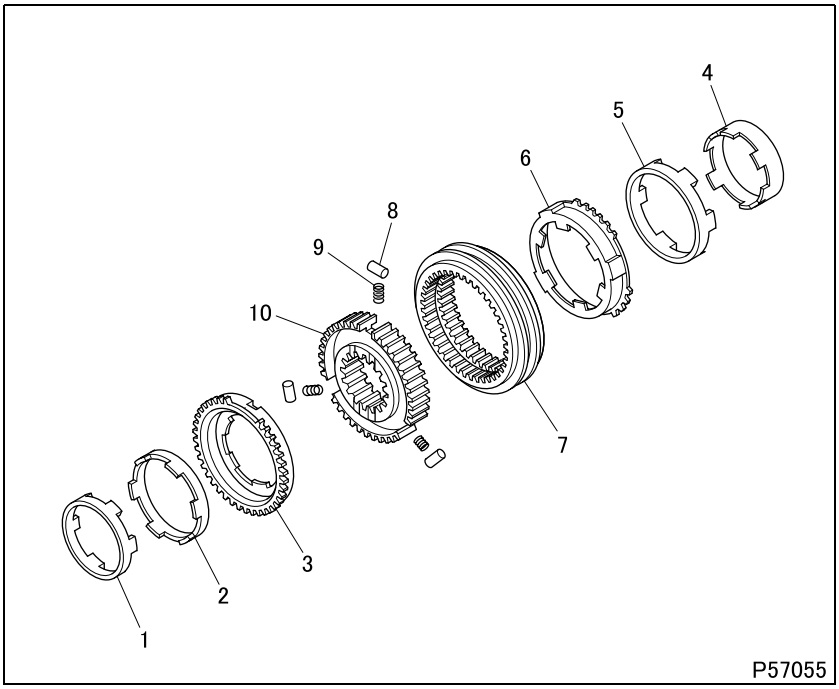

● Disassembly sequence

1 Synchronizer inner ring
2 Synchronizer center cone
3 Synchronizer outer ring
4 Synchronizer inner ring <3rd and 4th synchronizer>
5 Synchronizer center cone <3rd and 4th synchronizer>
6 Synchronizer outer ring <3rd and 4th synchronizer>
7 Synchronizer sleeve
8 Synchronizer pin
9 Synchronizer spring
10 Synchronizer hub

● Assembly sequence

Follow the disassembly sequence in reverse.

Service standards (Unit: mm {in.})

Location	Maintenance item		Standard value	Limit	Remedy
3, 10	Clearance between protrusions of synchronizer outer ring and synchronizer hub groove	2nd synchronizer	3.4 to 4.0 {0.13 to 0.16}	5.0 {0.20}	Replace
		3rd and 4th synchronizer	4.8 to 5.4 {0.19 to 0.21}	6.5 {0.26}	
6, 10	Clearance between protrusions of synchronizer outer ring and synchronizer hub groove		4.8 to 5.4 {0.19 to 0.21}	6.5 {0.26}	Replace
7, 10	Play in the rotation direction of synchronizer sleeve and synchronizer hub		0.052 to 0.148 {0.0020 to 0.0058}	0.3 {0.012}	Replace

◆Work before removal◆

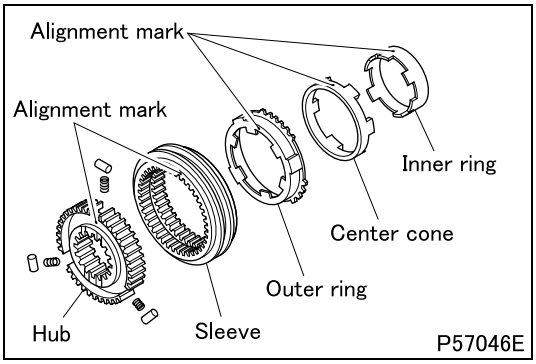

■Alignment marks: Synchronizer inner ring, center cone, outer ring and sleeve

- Put alignment marks on the synchronizer inner ring, center cone, outer ring and hub, each at one location, aligning with the alignment mark on the synchronizer sleeve before disassembly.

◆Inspection procedure◆

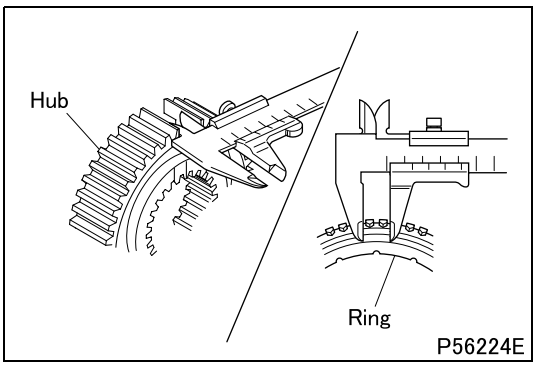

■ **Inspection: Clearance between synchronizer outer ring protrusion and synchronizer hub groove**

- If measurement exceeds the limit, replace defective parts.

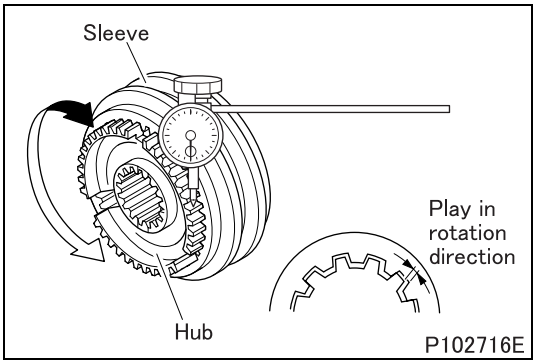

■ **Inspection: Play of synchronizer sleeve and synchronizer hub in rotation direction**

- Hold the synchronizer sleeve and measure the play with rotating the synchronizer hub.
- If the measurement exceeds the limit, replace defective parts.

◆Installation procedure◆

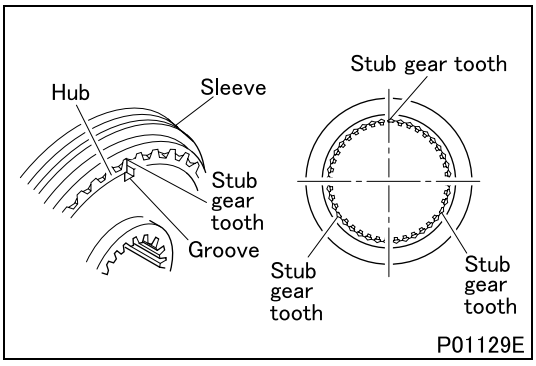

■ **Installation: Synchronizer sleeve and synchronizer hub**

- When replacing the synchronizer sleeve or synchronizer hub with a new one, align the plunger grooves (three locations) of the synchronizer hub with stub gear teeth (three locations) of the synchronizer sleeve to install.

5th and 6th synchronizer

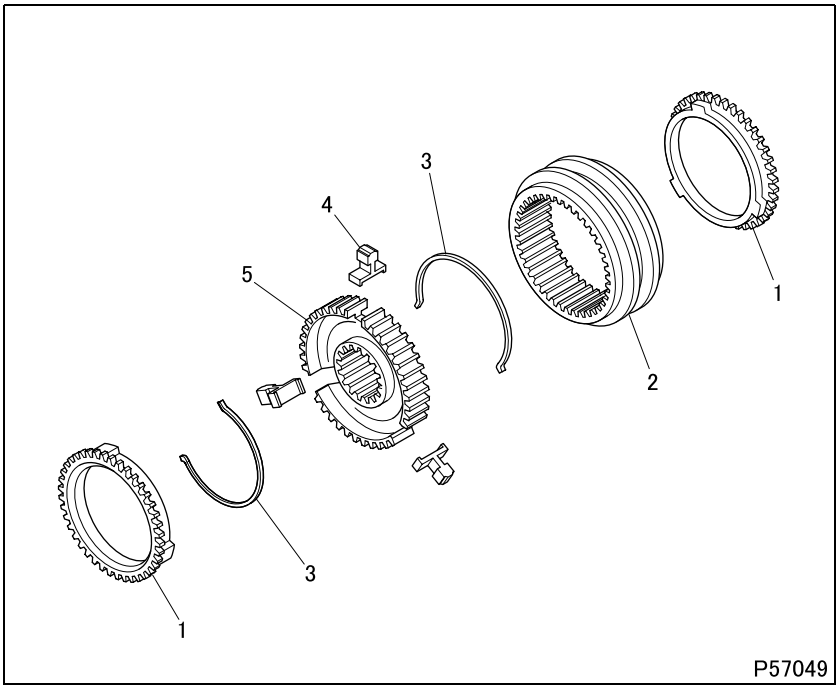

● Disassembly sequence

1 Synchronizer ring
2 Synchronizer sleeve
3 Shifting key spring
4 Shifting key
5 Synchronizer hub

● Assembly sequence

Follow the disassembly sequence in reverse.

Service standards (Unit: mm {in.})

Location	Maintenance item	Standard value	Limit	Remedy
1, 5	Clearance between protrusions of synchronizer ring and synchronizer hub groove	4.7 to 5.3 {0.19 to 0.21}	6.5 {0.26}	Replace
2, 5	Play in the rotation direction of synchronizer sleeve and synchronizer hub	0.052 to 0.148 {0.0020 to 0.0058}	0.3 {0.012}	Replace
4, 5	Clearance between shifting key and synchronizer hub keyway	0.05 to 0.2 {0.0020 to 0.0079}	0.5 {0.020}	Replace

◆Work before removal◆

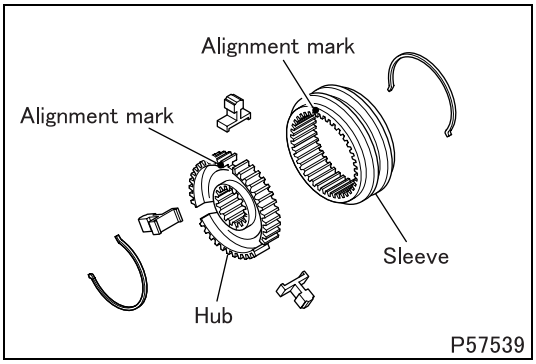

■Alignment marks: Synchronizer sleeve and synchronizer hub

- Put alignment marks on the synchronizer sleeve and synchronizer hub, each at one location before disassembly.

◆Inspection procedure◆

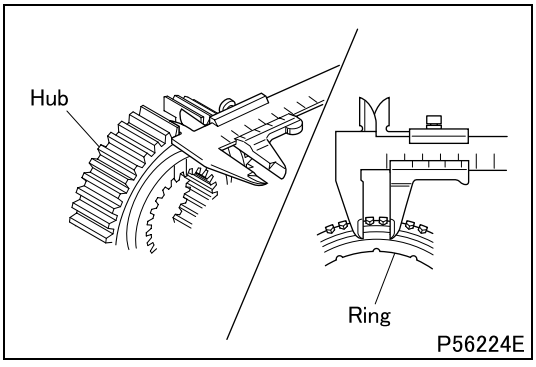

■Inspection: Clearance between synchronizer ring protrusion and synchronizer hub groove

- If measurement exceeds the limit, replace defective parts.

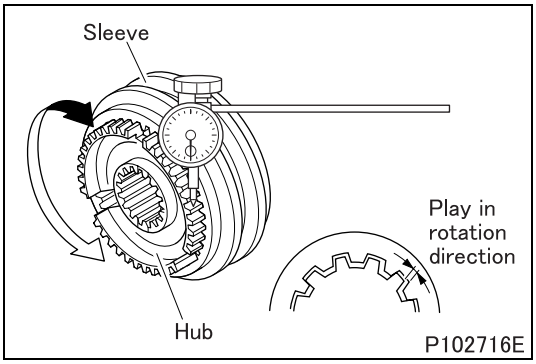

■ **Inspection: Play of synchronizer sleeve and synchronizer hub in rotation direction**

- Hold the synchronizer sleeve and measure the play with rotating the synchronizer hub.
- If the measurement exceeds the limit, replace defective parts.

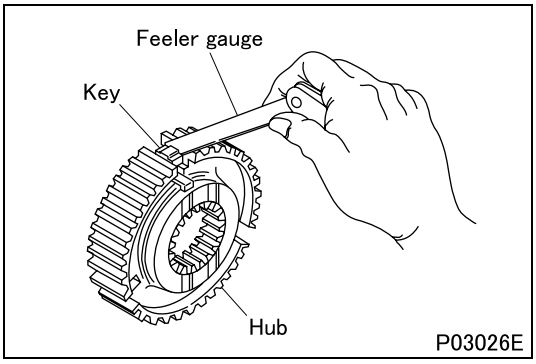

■ **Inspection: Clearance between shifting key and synchronizer hub keyway**

- If measurement exceeds the limit, replace defective parts.

◆Installation procedure◆

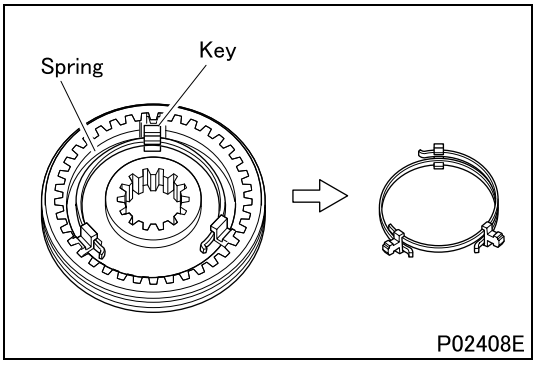

■ **Installation: Shifting key spring**

- After inserting the shifting key into the synchronizer hub groove, install the shifting key spring so that its opening is not located at the shifting key position.
- Install so that openings of the two shifting key springs are not located at the same position.

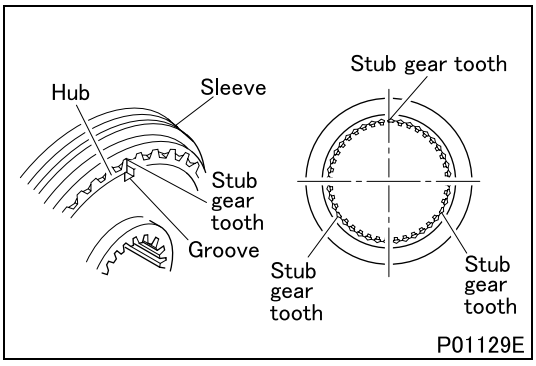

■ **Installation: Synchronizer sleeve and synchronizer hub**

- When replacing the synchronizer sleeve or synchronizer hub with a new one, align the plunger grooves (three locations) of the synchronizer hub with stub gear teeth (three locations) of the synchronizer sleeve to install.

M E M O

COUNTERSHAFT

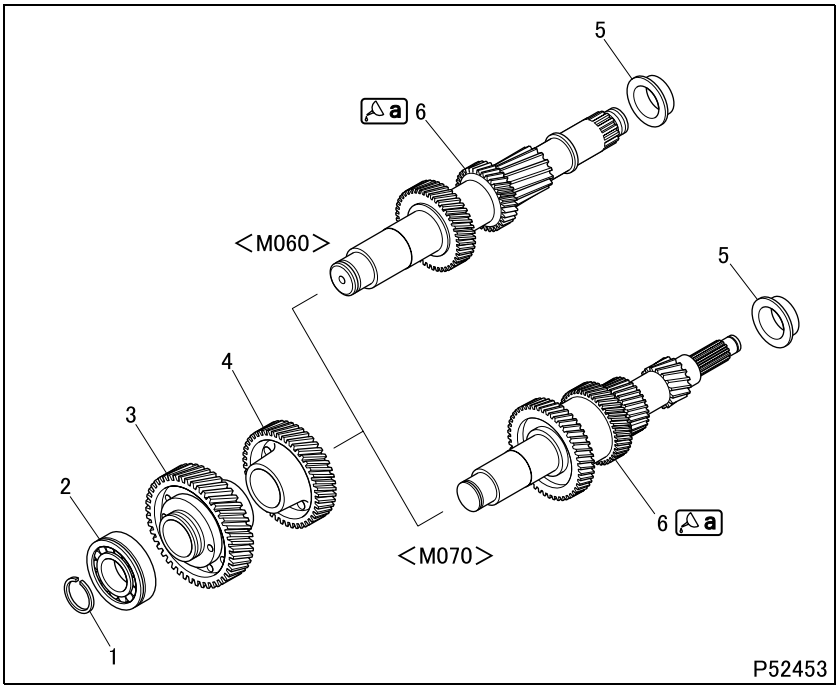

● **Disassembly sequence**

1 Snap ring
2 Countershaft front bearing
3 Countershaft constant mesh gear
4 Countershaft 4th gear <M060>
Countershaft 5th gear <M070>
5 Countershaft rear bearing inner race
6 Countershaft

● **Assembly sequence**

Follow the disassembly sequence in reverse.

Lubricant and/or sealant

Mark	Points of application	Specified lubricant and/or sealant	Quantity
a	Gear installation area of countershaft	ThreeBond 1375B	As required

Special tools (Unit: mm {in.})

Mark	Tool name and shape	Part No.	Application
a	Countershaft bearing puller 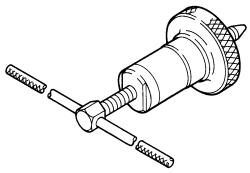 01139	<M060> *MH062426 <M070> *MH062429	Removal of countershaft front bearing
b	Countershaft bearing installer 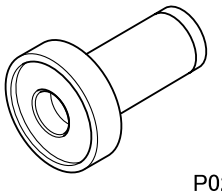 P02141	<M060> *ME624233 <M070> *MH062630	Installation of countershaft front bearing
c	Snap ring expander 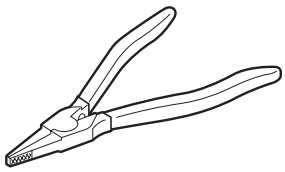 P01137	MH061268	Removal and installation of snap ring

Mark	Tool name and shape	Part No.	Application
d	Countershaft gear puller A: φ30 {1.18}, B: 60 {2.36} 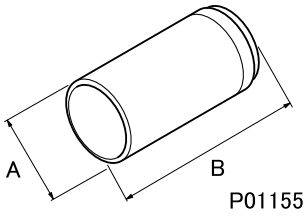 P01155	ME624243	Removal of countershaft gear
e	Countershaft gear installer A: φ75 {2.95}, B: φ63 {2.48}, C: 120 {4.72} 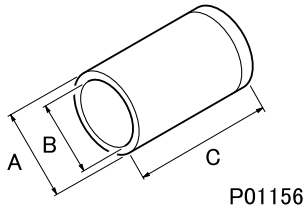 P01156	MH061740	Installation of countershaft gear

*: Components of puller and installer kit (See puller and installer.)

◆Removal procedure◆

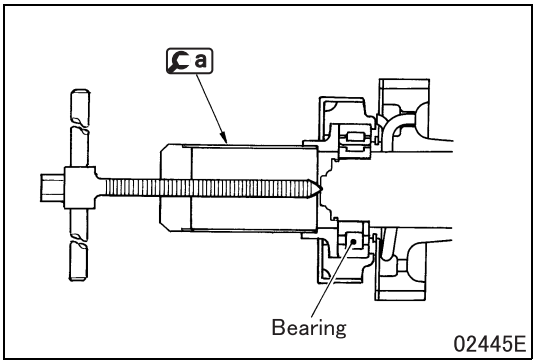

02445E

■ **Removal: Countershaft front bearing**

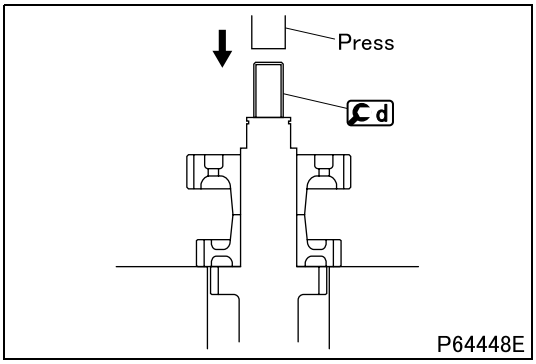

P64448E

■ **Removal: Countershaft constant mesh gear, countershaft 4th gear or countershaft 5th gear**

- Use a press.

◆Installation procedure◆

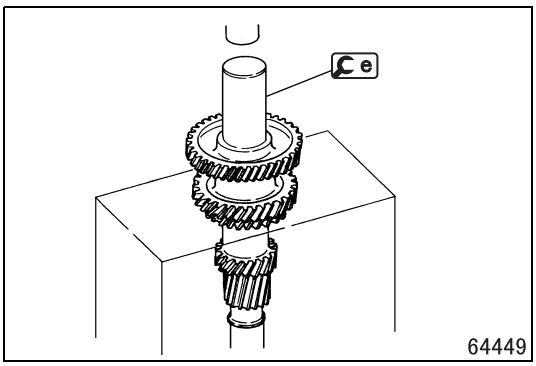

■ **Installation: Countershaft constant mesh gear, countershaft 4th gear or countershaft 5th gear**

- Use a press.

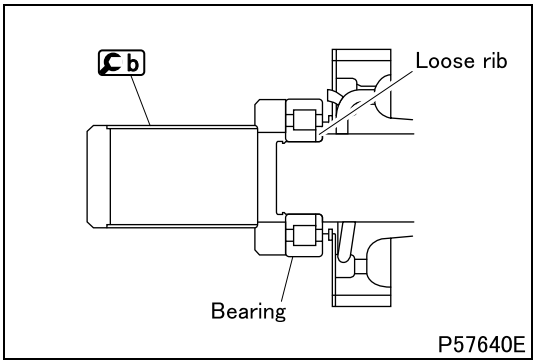

■ **Installation: Countershaft front bearing**

- Install the countershaft front bearing, facing the loose rib in the illustrated direction.

CAUTION ⚠

- **Be careful not to install the countershaft front bearing in the wrong direction. Otherwise, the bearing cannot be removed because the inner shaft of the bearing remains in the countershaft during removal.**

M E M O

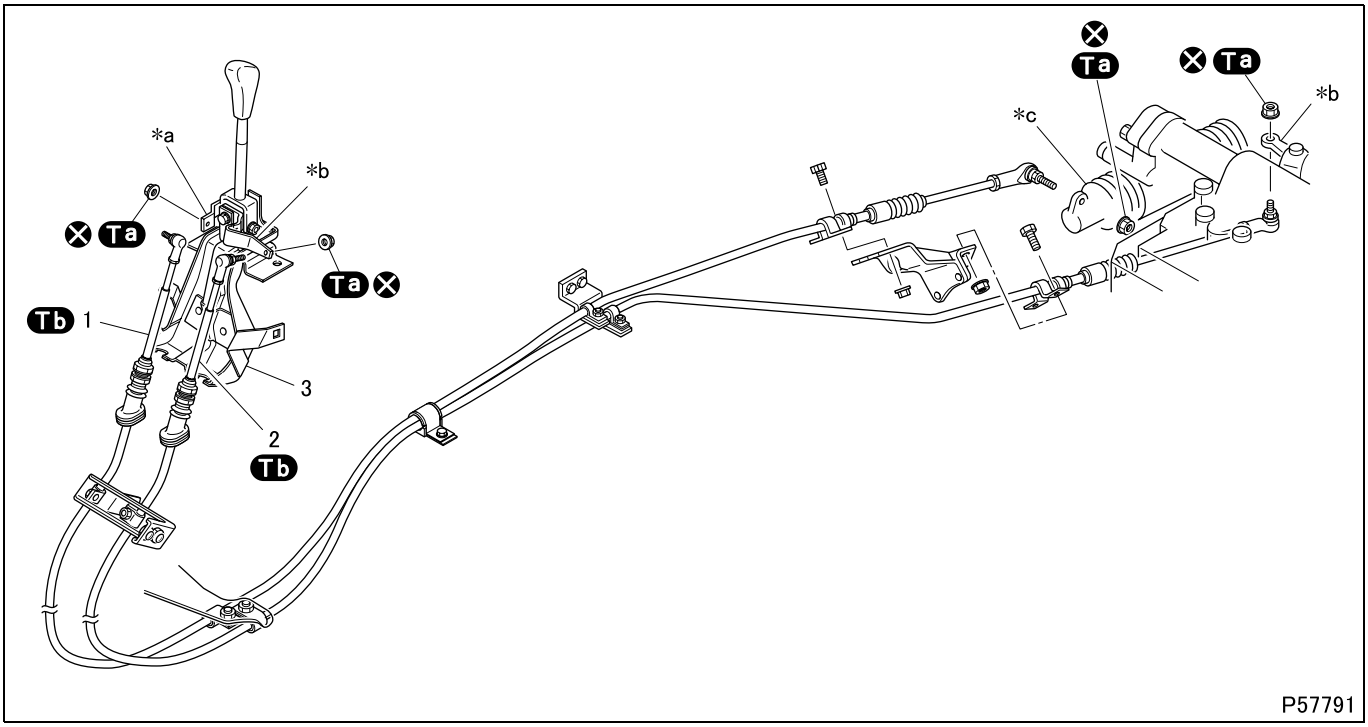

● **Removal sequence**

1 Shift cable
2 Select cable
3 Control lever (See later section.)

***a**: Shift lever
***b**: Select lever
***c**: Power shift
⊗: Non-reusable parts

● **Installation sequence**

Follow the removal sequence in reverse.

CAUTION ⚠

- **Locking agent is applied to cable mounting nuts. Be sure to replace the nuts when loosening or removing them.**

Tightening torque (Unit: N·m {ft.lbs, kgf·m})

Mark	Parts to be tightened	Tightening torque	Remarks
Ta	Nut (shift cable mounting)	18.6 to 23.5 {14 to 17, 1.9 to 2.4}	–
	Nut (select cable mounting)		
Tb	Lock nut on shift cable	58.8 to 83.4 {43 to 62, 6 to 8.5}	–
	Lock nut on select cable		

◆Installation procedure◆

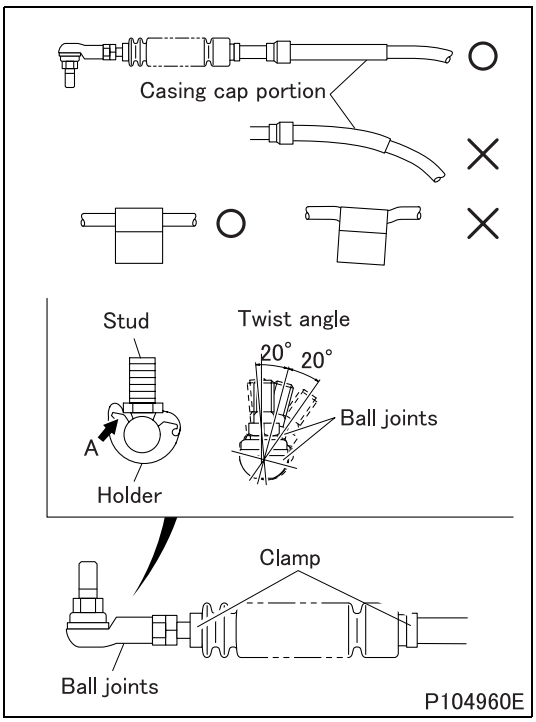

■ **Installation: Shift cable and select cable**

CAUTION ⚠

- **Install the casing cap portion as a straight line.**
- **The radius of the cable bend shall be 200 mm {7.87 in.} or more.**
- **Make sure that there is no obstruction in movement of the cable.**
- **Install the clamps at right angles to the cable.**
- **Do not twist clamps at either ends of the boot.**
- **Check for the identification mark on the shift cable.**
- **The twist angle of ball joints at both ends of the cables shall be 20 degrees or less.**
- **Make sure that the ball joints face the correct direction. Installing them in the wrong direction can remarkably reduce durability of the cables.**

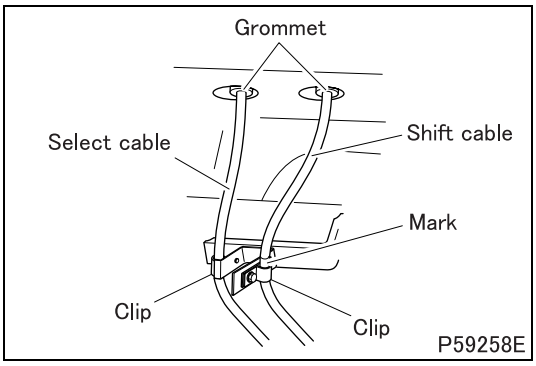

- Insert the shift cable and select cable into the interior from under the cab floor.
- Clamp the shift cable at the marking area.

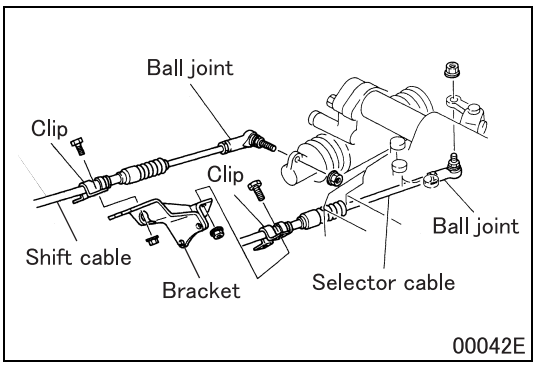

- Install the cable clip to the bracket temporarily and connect the ball joint to the shift lever or select lever.
- Arrange the cable so that it not twisted, then tighten the clip permanently.

CAUTION ⚠

- **Make sure that the ball joint face the correct direction.**

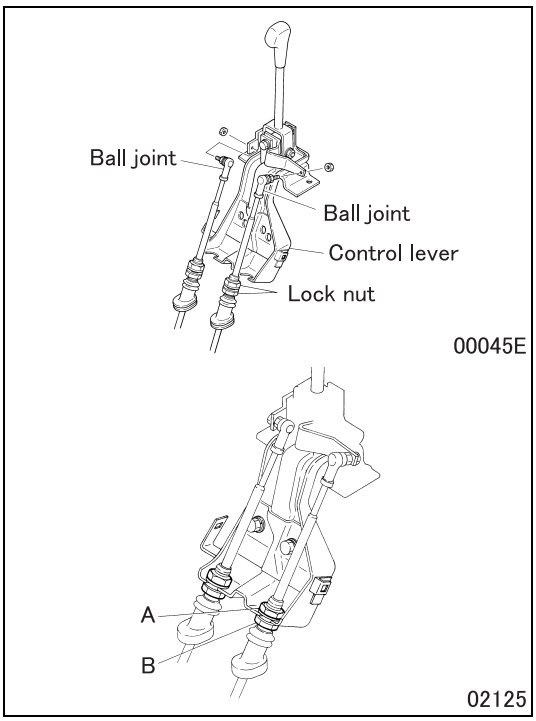

- Tilt the cab down.
- Install the control lever.
- Install the cable on the control lever temporarily and connect the ball joint to the shift lever and select lever. Arrange the cable so that it is not twisted, then tighten lock nuts permanently.

CAUTION ⚠

- **When installing the lock nut, tighten lower nut B. Do not move upper nut A.**

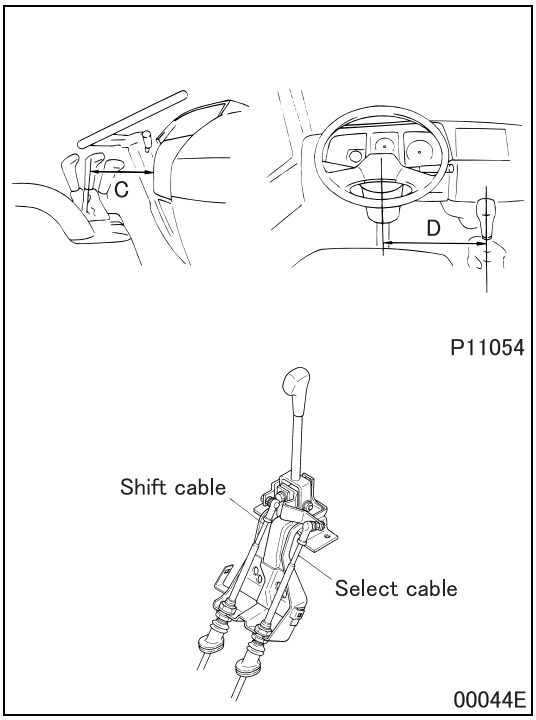

- If the gear shift lever leans to the front or rear, or to the left or right, excessively, adjust the length of the cable and the position of the gear shift lever.

Fore-and-aft direction C (Adjust by shift cable.)

Distance from instrument panel	288 mm {11.3 in.}
To tilt the gear shift lever forward	Shorten the cable.
To tilt the gear shift lever backward	Lengthen the cable.

Left-and-right direction D (Adjust by select cable.)

Distance from the center of the steering wheel with the gear shift lever knob in neutral M060: To the 4th-5th line of the gear shift lever knob M070: To the 3rd-4th line of the gear shift lever knob	410 mm {16.1 in.}
To tilt the gear shift lever to the right	Lengthen the cable.
To tilt the gear shift lever to the left	Shorten the cable.

- Make sure to operate the gear shift lever that it shifts smoothly and selects each position.

Control lever

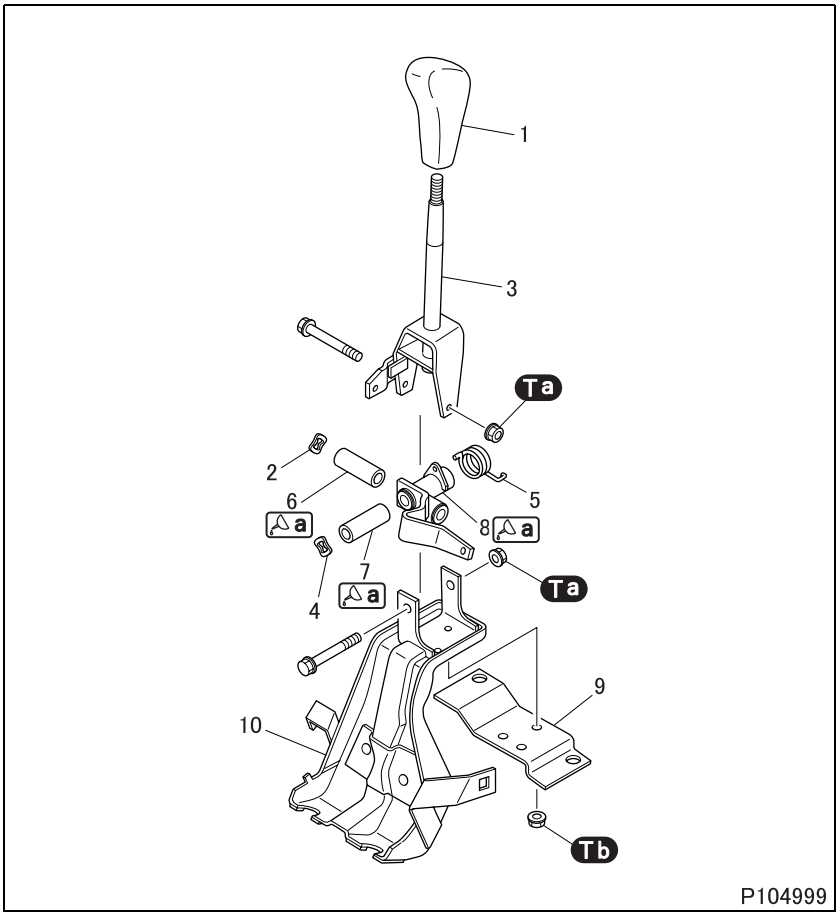

● **Disassembly sequence**

1 Shift knob
2 Wave washer
3 Shift lever
4 Wave washer
5 Return spring
6 Collar
7 Collar
8 Select lever
9 Bracket
10 Set board

● **Assembly sequence**

Follow the disassembly sequence in reverse.

Tightening torque (Unit: N·m {ft.lbs, kgf·m})

Mark	Parts to be tightened	Tightening torque	Remarks
Ta	Nut (shift lever mounting)	19 to 28 {14 to 21, 1.9 to 2.9}	–
	Nut (select lever mounting)		
Tb	Nut (bracket mounting)	4 to 6 {3.0 to 4.4, 0.4 to 0.6}	–

Lubricant and/or sealant

Mark	Points of application	Specified lubricant and/or sealant	Quantity
a	All sliding areas	Chassis grease [NLGI No.1 (Li soap)]	As required

PULLER AND INSTALLER KIT

- The puller and installer kit consists of principal bearing pullers and installers selected from the special tools necessary for the maintenance of the manual transmission described in this work group.
- For an installer use a component of this kit independently, and for a puller use the components of this kit in combination.

		Puller and installer kit		Bearing puller for M060						
		M060	M070				Bearing puller for M070			
Component	Part No.	MH062425	MH062444	MH061731	MH061732	MH062426	MH062440	MH062429	MH062432	MH062433
MH062427	Claw	O				O				
ME624235	Installer	O	O							
ME624234	Installer	O								
ME624233	Installer	O								
ME624236	Installer	O								
MH061162	Handle	O	O	O	O	O	O	O	O	O
ME624232	Bolt	O	O	O	O	O	O	O	O	O
MH061735	Body	O	O		O		O			
MH061734	Body	O	O	O		O		O	O	
ME624229	Protector	O	O	O	O	O	O	O	O	
MH062430	Claw	O	O				O	O		
ME624227	Claw	O			O					
ME624226	Claw	O		O						
MH062436	Body		O							O
MH062435	Protector		O							O
MH062642	Installer		O							
MH062634	Installer		O							
MH062630	Installer		O							
MH062628	Installer		O							
MH062434	Claw		O							O
ME624228	Claw		O						O	

Group 23A

Automatic Transmission <M065A5 (Allison 1000RDS, 2200RDS)>

Table of Contents

Back Home

MITSUBISHI FUSO TRUCK OF AMERICA, Inc.

Pub.No.PWME0806-23A

INDEX

SPECIFICATIONS 23A-2

STRUCTURE AND OPERATION
1. **Outline 23A-4**
2. **Electronic Control System 23A-9**
3. **Electronic Control Unit Connection Diagram 23A-12**

TROUBLESHOOTING
1. **Failure by Equipment 23A-14**

ON-VEHICLE INSPECTION AND ADJUSTMENT
1. **Inspection of Automatic Transmission Oil Leakage 23A-18**
2. **Check for Looseness in Automatic Transmission Mounting Bolts and Nuts 23A-18**
3. **Inspection of Play and Looseness in Companion Flange 23A-19**
4. **Inspection of Automatic Transmission Cooling System..... 23A-19**
5. **Inspection of Automatic Transmission Fluid..... 23A-20**
6. **Replacement of Automatic Transmission Fluid..... 23A-22**
7. **Replacement of Oil Filter 23A-23**
8. **Stall Test 23A-24**
9. **Line Pressure Test..... 23A-26**
10. **Road Test 23A-27**

REMOVAL AND INSTALLATION OF AUTOMATIC TRANSMISSION 23A-28

PARKING BRAKE <FK61> 23A-32

AUTOMATIC TRANSMISSION CONTROL 23A-34

OIL COOLER 23A-40

PARTS REPLACEMENT OF AUTOMATIC TRANSMISSION PROPER..... 23A-42

INSPECTION OF ELECTRICAL EQUIPMENT 23A-44

INSTALLED LOCATIONS OF PARTS 23A-48

ELECTRICAL CIRCUIT DIAGRAM 23A-54

If the automatic transmission needs to be repaired due to internal abnormality, contact Allison Service Station for advice. The contact information is described in the Operator's Manual or on the following website.
Allison Service Station URL http://www.allisontransmission.com

SPECIFICATIONS

Item			Specification	
			FK61	Except FK61
Transmission type			M065A5	
Manufacturer			Allison	
Torque converter	Model type		TC222	
	Type		3-element, 1-stage, 2-phase	
	Stall torque ratio		1.58	
Transmission	Model type		1000RDS	2200RDS
	Type		Planetary gear type 5 forward speeds and 1 reverse speed	
	Gear ratio	1st	3.102	
		2nd	1.811	
		3rd	1.406	
		4th	1.000	
		5th	0.712	
		Rev	4.492	
Range selector pattern			P – R – N – D – 3 – 2 – L Engine can be started in P or N position only.	
Automatic transmission fluid	Specified fluid		DEXRON III	
	Fluid quantity for overall system (automatic transmission + oil cooler) L {qts}		12 + 2 {13 + 2.1}	15 + 2 {16 + 2.1}
	Fluid quantity for replacement L {qts}		6 {6.3}	9 {9.5}
Mass of automatic transmission kg {lb}			165 {365}	150 {330}

M E M O

1. Outline

- The automatic transmission forms a system in which gearshifts are automatically realized through direction of automatic transmission fluid on various paths by solenoid valves in accordance with sensor information on the vehicle speed, accelerator position, and other aspects of vehicle operation.
- The automatic transmission system provides various control functions. These include a diagnosis function (here, the automatic transmission electronic control unit monitors the main components and warns the driver of any abnormality), a backup function (here, the automatic transmission electronic control unit stops control of the automatic transmission when necessitated by an abnormality and changes the control method to enable continued driving in the event of a relevant abnormality).
- The system consists of an electronically controlled main control valve, a torque converter, planetary gears, clutches, and the automatic transmission electronic control unit and sensors that are used for control of the aforementioned components.

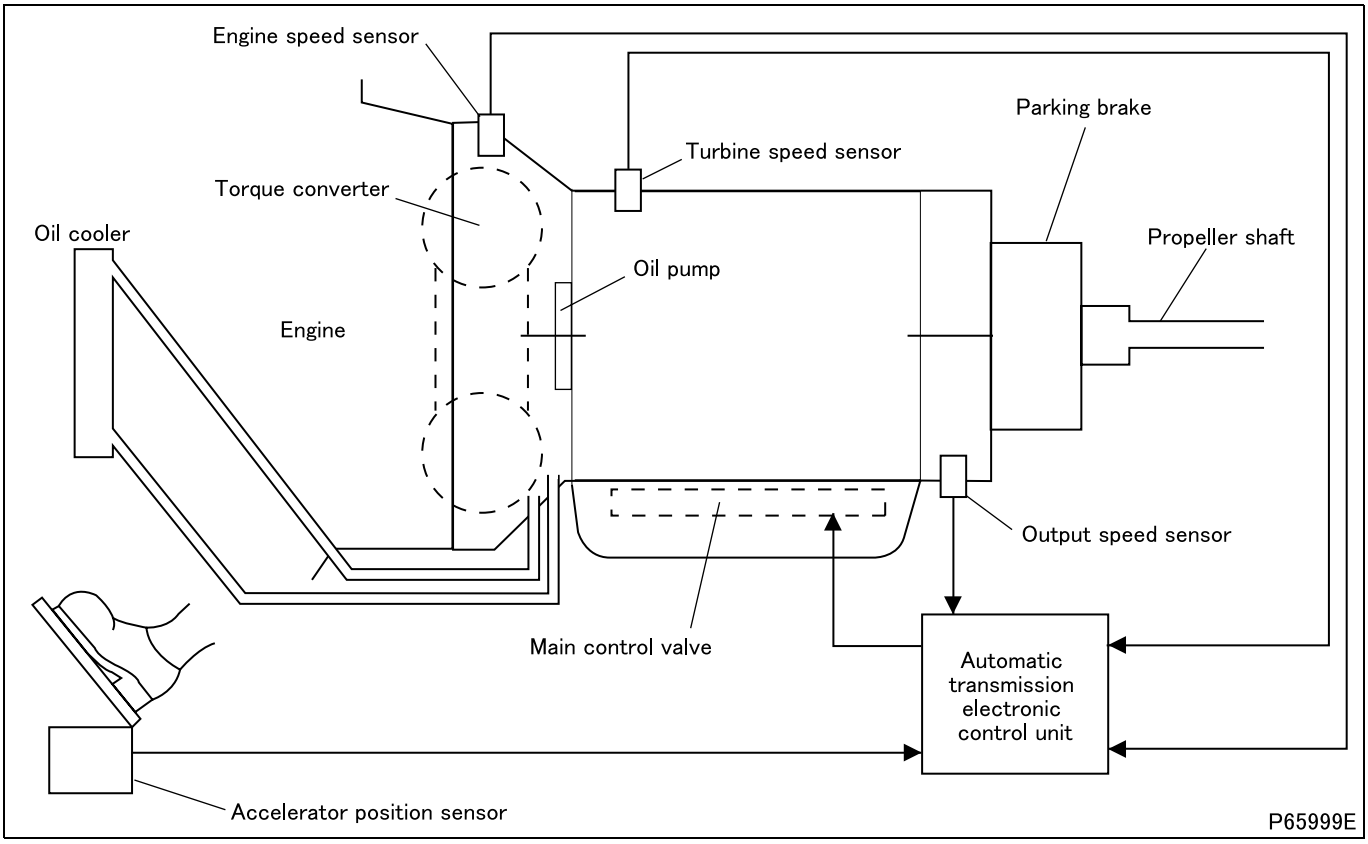

1.1 Automatic transmission

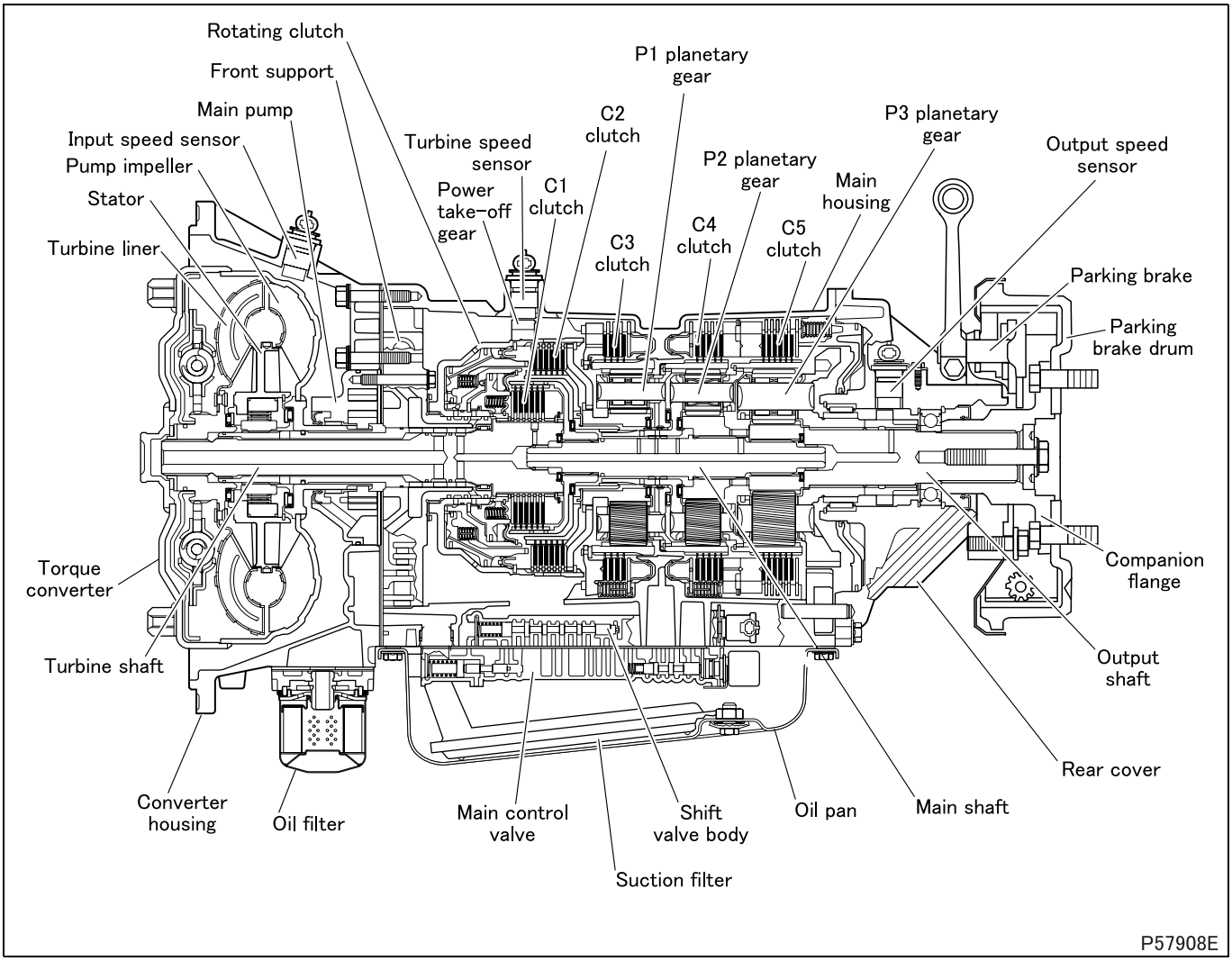

- This automatic transmission is a combination of a torque converter with lock-up mechanism and full automatic 5-speed gear system.

(1) Torque converter
- The torque converter, an input device of the transmission, increases the torque transmitted from the engine as well as acts as a fluid coupling to absorb shocks when starting or shifting. It also improves transmission efficiency by eliminating slippage by the lock-up mechanism over a certain vehicle speed.

(2) Transmission
- The transmission consists of a gear system of five forward gears and one reverse gear. Gears are shifted by three sets of planetary gear and hydraulically-operated five sets of wet-type multiple disc clutch.

(3) Hydraulic control
- Heavy use of electronic control using a microcomputer for the hydraulic control enables fine shifting control.

(4) Main pump
- The turbine shaft drives the internal gear of the main pump to suck up the oil from the oil pan. The oil is pressurized and fed to the hydraulic control system and each lubrication point.

(5) Main control valve and shift valve body
- This unit consists of the shift valves and the control valves. The shift valves are operated by the signals from electronic control unit and change the hydraulic circuits. The control valves are activated by the fluid pressure from the selected circuit and perform changeover of the clutches and regulation of the fluid pressure.

1.2 Automatic transmission control

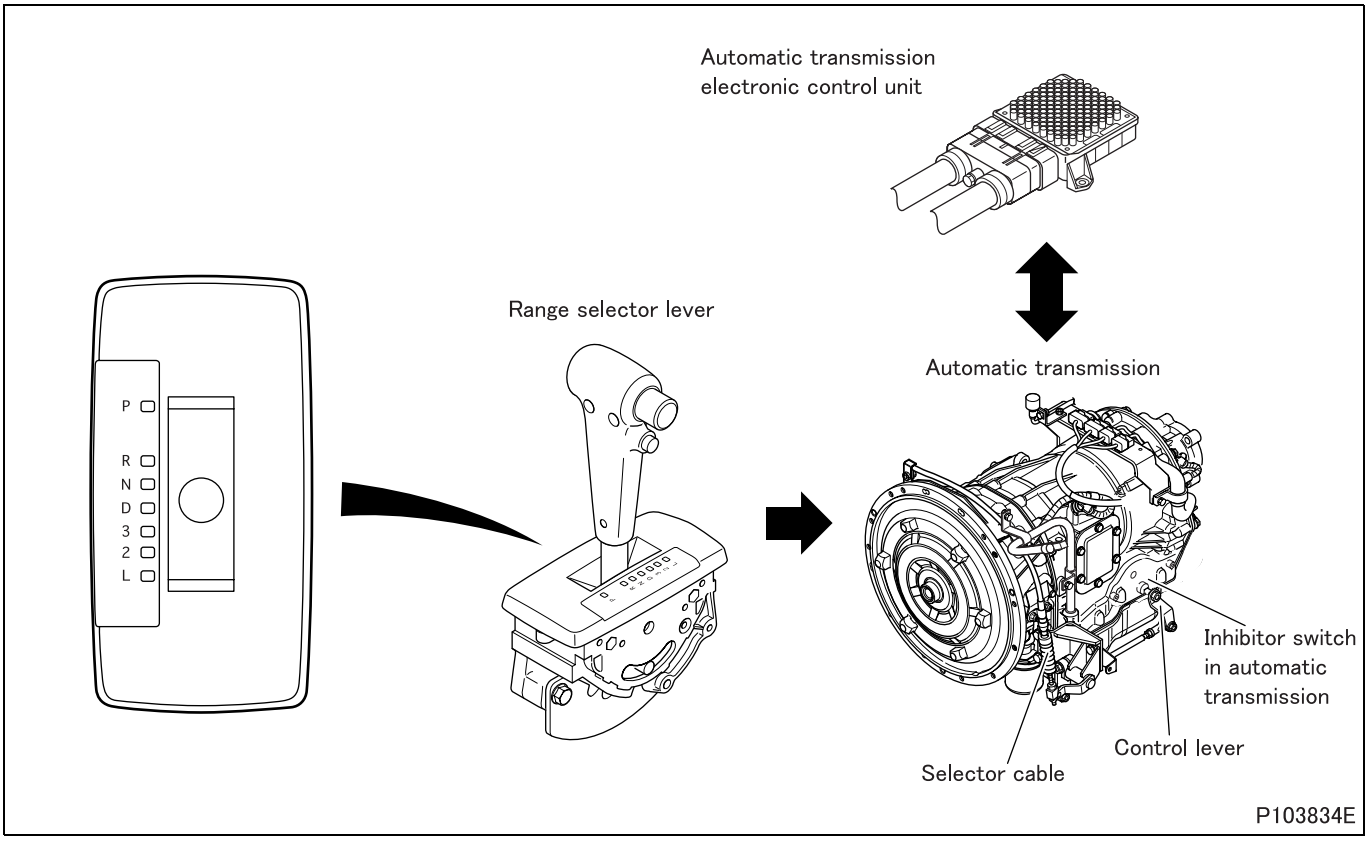

- When the range selector lever is operated to a desired range position, the control lever is rotated via the selector cable and the selected range is detected by the inhibitor switch.
- The detected range is transmitted to the automatic transmission electronic control unit, which in turn sends a corresponding speed change command to the automatic transmission.

1.3 Range selector lever

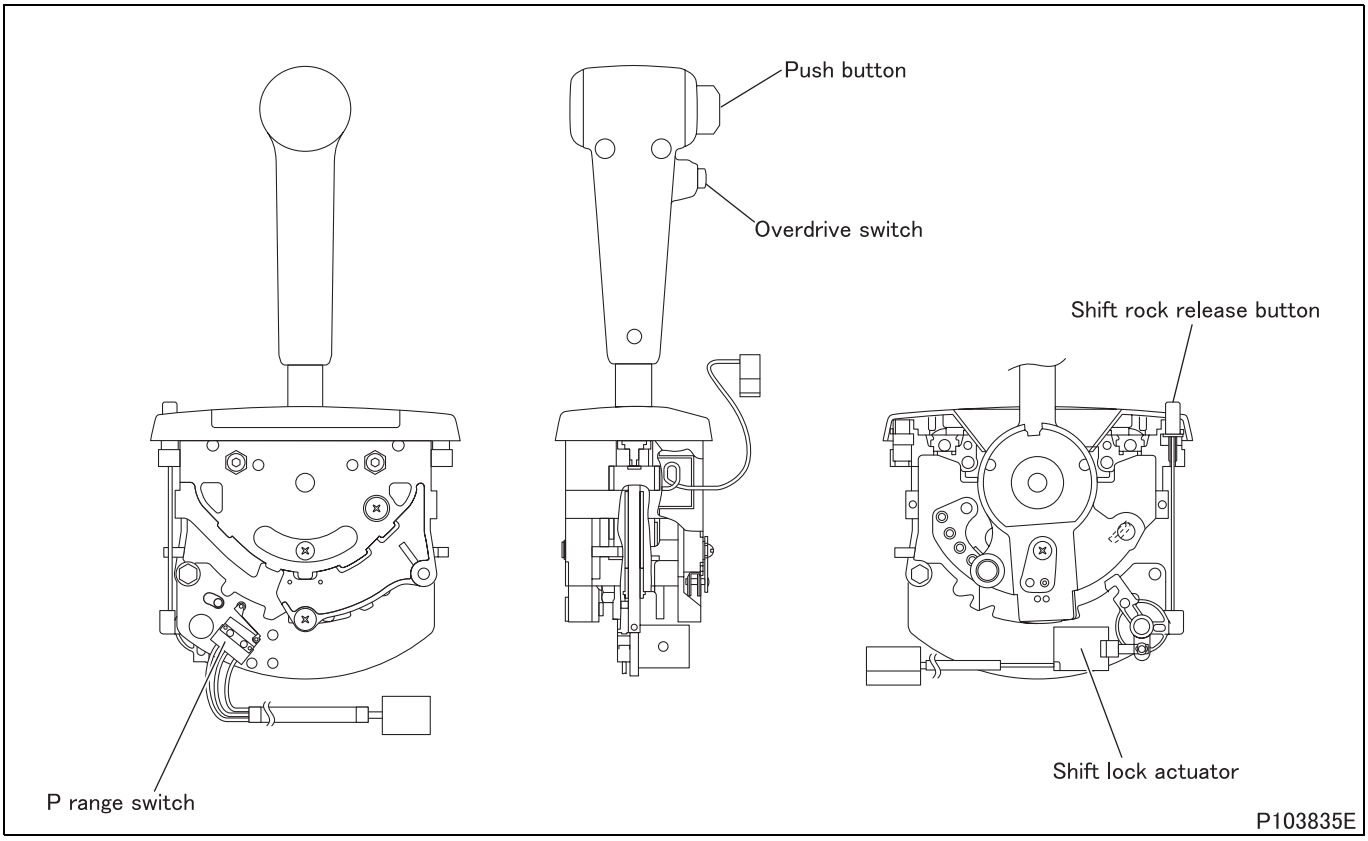

- The P range switch detects whether the range selector lever is in P range to control the key interlock function.
- The shift lock actuator is used to control the P shift lock function.
- The shift lock release button releases the P shift lock function mechanically without using the shift lock actuator. This button is used when the P shift lock function is faulty.

(1) Key interlock function

(1.1) Lock condition

Input signal	Key interlock electronic control unit	Output signal
P range switch OFF (Lever is in other than P range.)	Key interlock activated	Key interlock solenoid ON (Ignition key cannot be turned to the LOCK position.)

(1.2) Lock released

Input signal	Key interlock electronic control unit	Output signal
P range switch ON (Lever is in P range.)	Key interlock released	Key interlock solenoid OFF (Ignition key can be turned to the LOCK position.)

(2) P shift lock function

- When shifting gear from P range, if the operation condition of the shift lock actuator is not satisfied, the pushbutton on the range selector lever cannot be pushed in (the gearshift cannot be performed).

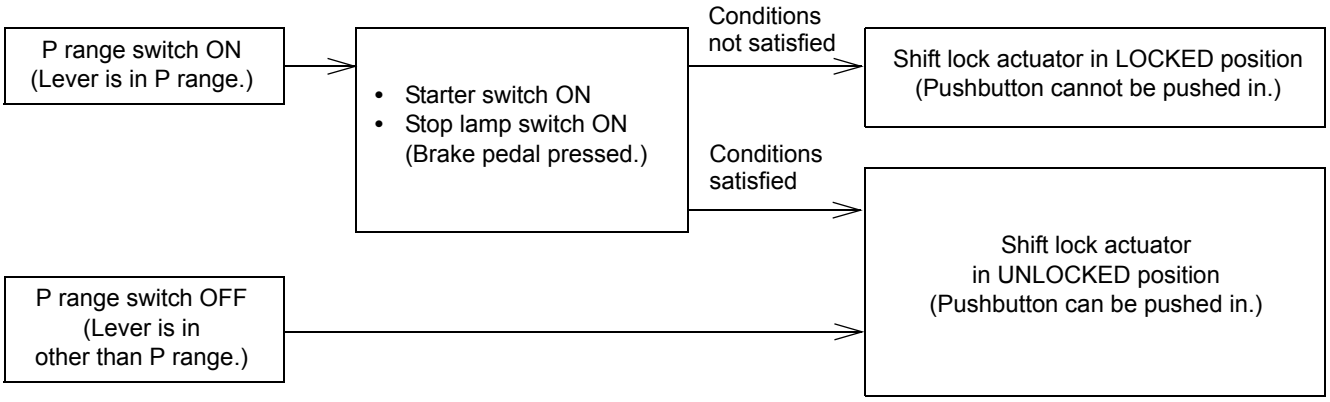

2. Electronic Control System

2.1 System block diagram

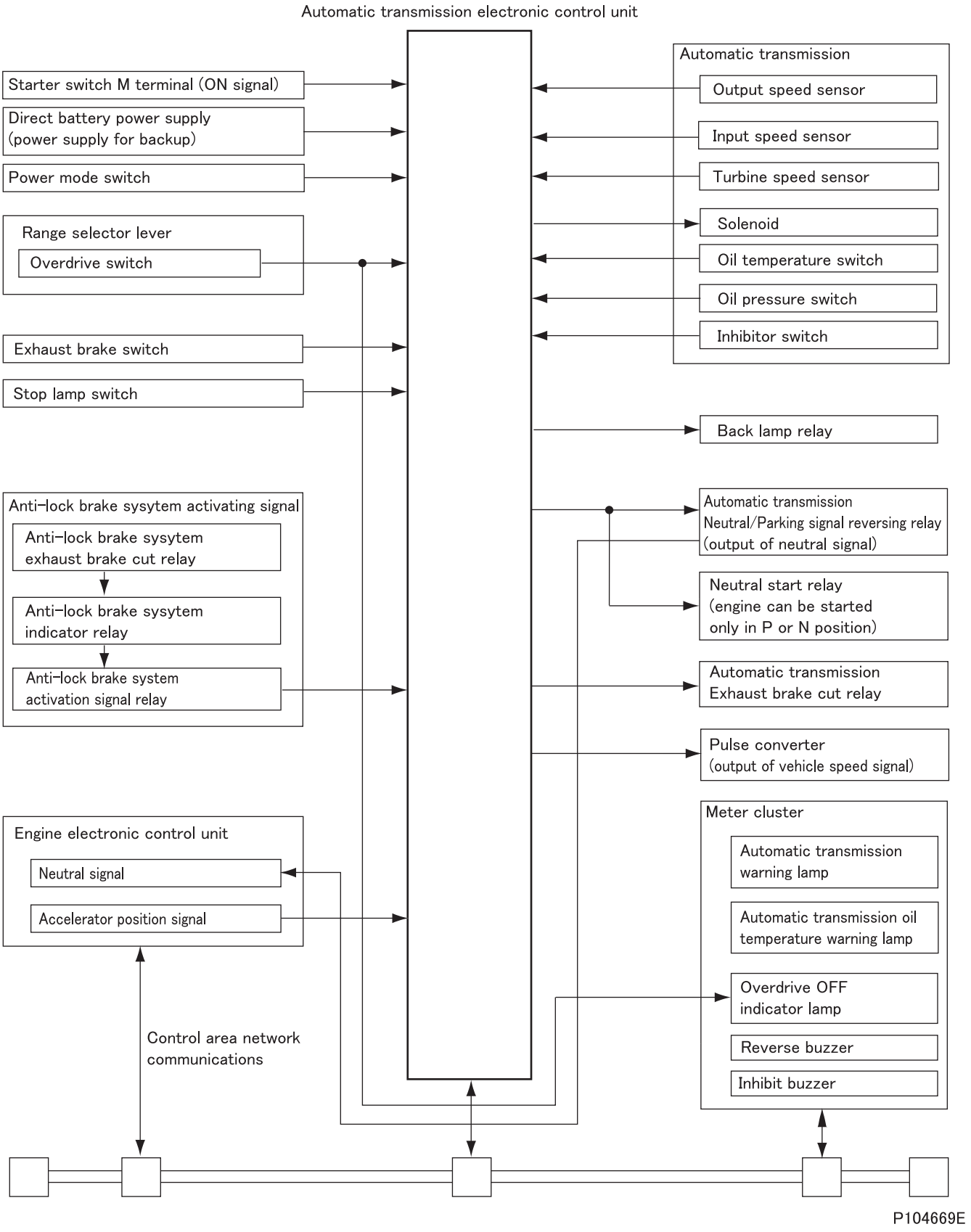

Parts name	Main function or working of switch and sensor
Starter switch	Power supply to control unit, etc. (ON position)
Power mode switch	Detection of driving mode switch
Range selector lever	Designation of driving range
Overdrive switch	Detection of overdrive OFF signal
Exhaust brake switch	Detection of exhaust brake operating
Stop lamp switch	Transmission of brake signal
Anti-lock brake system activation signal relay and Anti-lock brake system indicator relay	Detection of anti-lock brake system activating signal
Engine electronic control unit (accelerator position sensor)	Detection of accelerator opening signal (used for shifting control and lock-up control)
Output speed sensor	Detection of vehicle speed (used for shifting control)
Input speed sensor	Detection of engine speed (used for lockup control)
Turbine speed sensor	Detection of turbine revolution (used for shifting control)
Solenoid	Actuation of each solenoid
Oil temperature switch	Detection of automatic transmission fluid temperature (used for oil temperature control)
Oil pressure switch	Operation of shifting clutch
Inhibitor switch	Detection of range selector lever position signal
Automatic transmission warning lamp	Indication of system failure
Automatic transmission oil temperature warning lamp	Warning indication of abnormal rise of oil temperature
Overdrive OFF indicator lamp	Indication of overdrive OFF
Inhibit buzzer	Warning for shifting limit
Automatic transmission Neutral/Parking signal reversing relay	Detection of P and N signal
Neutral start relay	Approval of engine start
Automatic transmission exhaust brake cut relay	Output of exhaust brake cut
Pulse converter	Distribution of vehicle speed pulse signal

2.2 Fail-safe function

<table>
<tr><th>Main faulty content</th><th>Reaction and operation of transmission</th></tr>
<tr><td>Battery voltage too low (faulty power supply)</td><td>• Shifting only to R, 1st, 3rd, 5th is possible.</td></tr>
<tr><td>• Turbine speed sensor faulty
• Output speed sensor faulty</td><td>• Automatic transmission warning lamp illuminates.
• Lock-up is released and the current gear is fixed when moving forward.
• The gear is fixed to neutral when in reverse gear.</td></tr>
<tr><td>Input speed sensor faulty</td><td>• Lock-up is released.
• Normal shifting is possible using turbine speed sensor signal.</td></tr>
<tr><td>Drop in voltage during running (faulty power supply)</td><td>Lockup is released and the gear is fixed to the following.
<table>
<tr><td>Immediately preceding gear</td><td>R, N</td><td>1st</td><td>2nd, 3rd</td><td>4th, 5th</td></tr>
<tr><td>Gear to be changed to</td><td>N</td><td>1st</td><td>3rd</td><td>5th</td></tr>
</table></td></tr>
<tr><td>Solenoid and oil pressure switch faulty</td><td>• Automatic transmission fluid warning lamp illuminates.
• Lock-up is released and the gear is fixed to the specified gear.</td></tr>
<tr><td>Wheels lock by sudden braking</td><td>Lock-up is released. The immediately preceding gear stays on and does not shift. (The transmission is shifted to the 1st gear after the vehicle is stopped.)</td></tr>
<tr><td>Inhibitor switch faulty</td><td>The gear shifts regarding the range as the immediately preceding range.</td></tr>
<tr><td>Throttle signal faulty</td><td>The gear shifts regarding the throttle opening as the specified value.</td></tr>
<tr><td>Control by oil temperature inside oil pan</td><td>• –35 °C {–31 °F} or below: Only 2nd gear and reverse gear can be operated.
• –25 °C {–13 °F} or below: Only 1st to 4th gears and reverse gear can be operated.
• 0 °C {32 °F} or below: Actuation of lockup is halted.
• 127 °C {260 °F} or above: The automatic transmission fluid warning lamp illuminates and shifting to 5th gear is prohibited.</td></tr>
</table>

2.3 Operation of transmission when power is lost

Gear engaged during	When failure occurs driving	When shifting gear		After restarting engine	
		N → R	N → D	N → R	N → D
R	Neutral	Neutral	5th gear	Reverse gear	3rd gear
N	Neutral	Neutral	Neutral	Reverse gear	3rd gear
1st gear	1st gear	Reverse gear	3rd gear	Reverse gear	3rd gear
2nd gear	3rd gear	Reverse gear	3rd gear	Reverse gear	3rd gear
3rd gear	3rd gear	Reverse gear	3rd gear	Reverse gear	3rd gear
4th gear	5th gear	Neutral	5th gear	Reverse gear	3rd gear
5th gear	5th gear	Neutral	5th gear	Reverse gear	3rd gear

3. Electronic Control Unit Connection Diagram

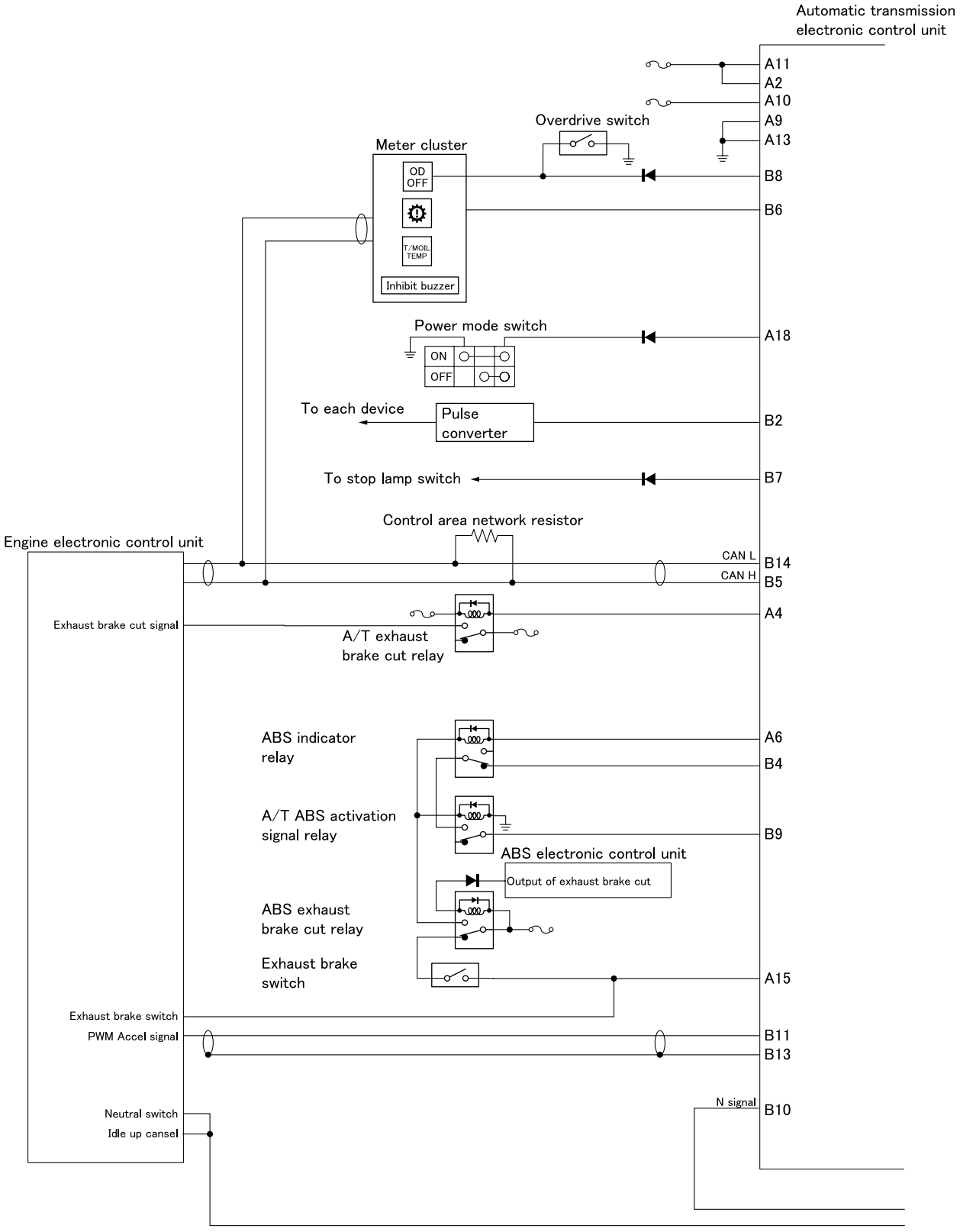

ABS : Anti-lock brake system
A/T : Automatic transmission

P104635E-1

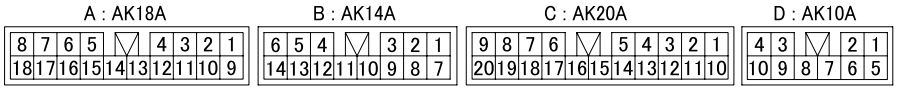
A : AK18A
8 7 6 5 4 3 2 1
18 17 16 15 14 13 12 11 10 9
B : AK14A
6 5 4 3 2 1
14 13 12 11 10 9 8 7
C : AK20A
9 8 7 6 5 4 3 2 1
20 19 18 17 16 15 14 13 12 11 10
D : AK10A
4 3 2 1
10 9 8 7 6 5

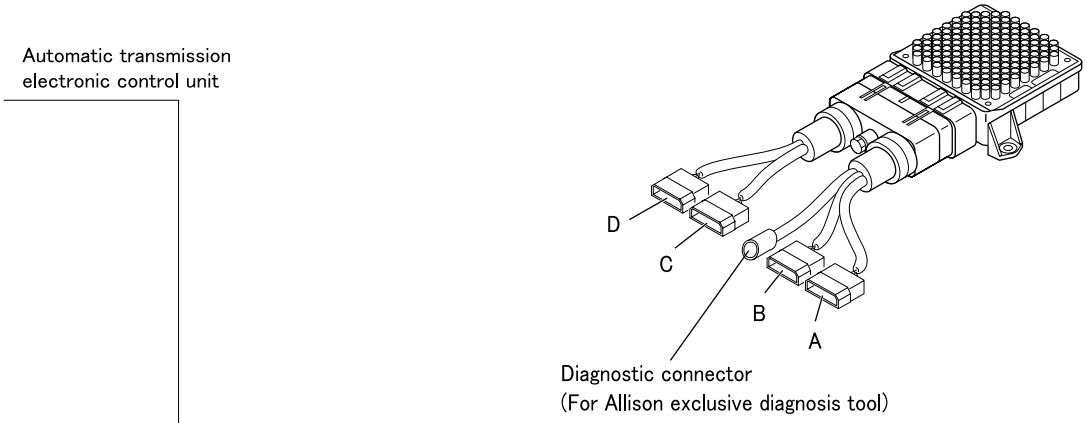
Automatic transmission
electronic control unit
D
C
B
A
Diagnostic connector
(For Allison exclusive diagnosis tool)

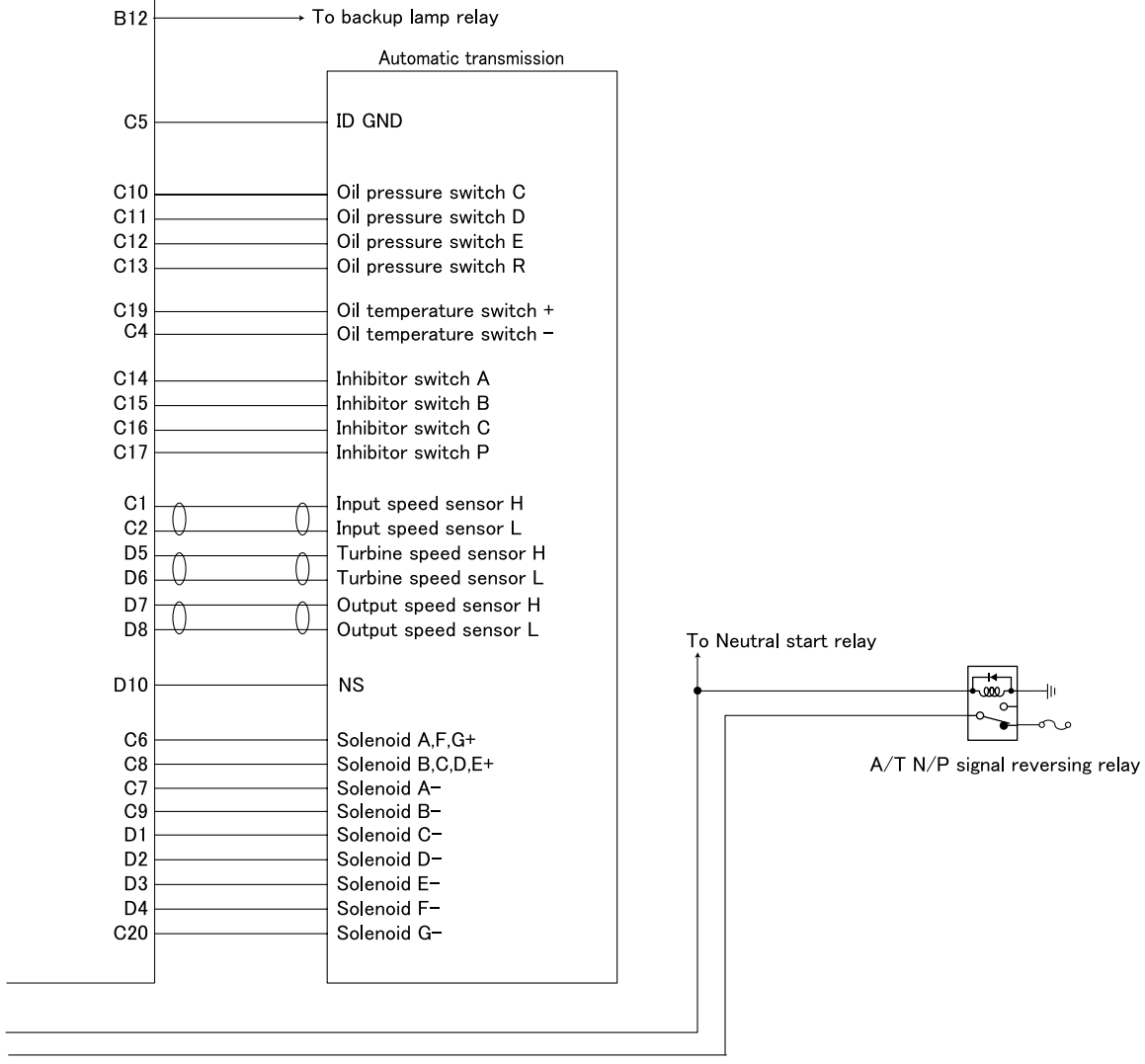
B12
To backup lamp relay
Automatic transmission
C5
ID GND
C10
Oil pressure switch C
C11
Oil pressure switch D
C12
Oil pressure switch E
C13
Oil pressure switch R
C19
Oil temperature switch +
C4
Oil temperature switch −
C14
Inhibitor switch A
C15
Inhibitor switch B
C16
Inhibitor switch C
C17
Inhibitor switch P
C1
Input speed sensor H
C2
Input speed sensor L
D5
Turbine speed sensor H
D6
Turbine speed sensor L
D7
Output speed sensor H
D8
Output speed sensor L
D10
NS
C6
Solenoid A,F,G+
C8
Solenoid B,C,D,E+
C7
Solenoid A−
C9
Solenoid B−
D1
Solenoid C−
D2
Solenoid D−
D3
Solenoid E−
D4
Solenoid F−
C20
Solenoid G−
To Neutral start relay
A/T N/P signal reversing relay

1. Failure by Equipment

NOTE

- **If the automatic transmission warning lamp would not turn off, contact Allison service station.**
- **Allison exclusive diagnosis tool is required to read out the diagnosis code.**

Possible causes \ Symptoms		Engine does not start (engine does not run)	Automatic transmission warning lamp does not go out after engine start	Automatic transmission warning lamp sometimes flashes	Automatic transmission warning lamp does not illuminate when starter switch is turned ON	Forward gears and reverse gears do not engage (kept in N)	Gear stays in a forward or reverse gear	Specific shifting is not made	No correct shifting (shock, timing too high or too low)	Excessive creep in 1st and reverse gears	Moves forward in neutral	Moves backward in neutral	Overrun at full throttle acceleration	Clutch slippage, judder	Clutch slippage and judder in 1st, 2nd, 3rd and 4th gears
Engine failure	Idling too high									O	O	O			
	Idling too high (shifting from N to R or D)								O						
	Engine speed too high					O									
	Engine output low							O							
Accelerator signal failure from engine electronic control unit						O			O				O	O	
Lever and cable failure	Range selector lever not engaged in N or R	O													
	Range selector lever failure					O		O							
	Poor adjustment of range selector lever					O		O							
	Control lever failure					O		O							
	Poor adjustment of control lever					O		O							
	Poor adjustment of selector cable					O		O							
Electrical system failure on chassis side	Battery voltage low	O													
	Broken wire, poor connection	O	O	O	O	O		O	O						
	N start circuit failure	O													
	Automatic transmission warning lamp failure		O	O	O										
Electrical system failure on automatic transmission body side	Broken wire, poor connection	O	O	O	O	O		O	O						
	Inhibitor switch failure	O													
	Poor adjustment of inhibitor switch	O													
	Speed sensor failure					O		O	O				O	O	
	Oil temperature sensor failure							O							
Automatic transmission electronic control unit failure	Automatic transmission electronic control unit failure		O		O			O							
	Code recorded in automatic transmission electronic control unit		O												

Possible causes \ Symptoms		Engine does not start (engine does not run)	Automatic transmission warning lamp does not go out after engine start	Automatic transmission warning lamp sometimes flashes	Automatic transmission warning lamp does not illuminate when starter switch is turned ON	Forward gears and reverse gears do not engage (kept in N)	Gear stays in a forward or reverse gear	Specific shifting is not made	No correct shifting (shock, timing too high or too low)	Excessive creep in 1st and reverse gears	Moves forward in neutral	Moves backward in neutral	Overrun at full throttle acceleration	Clutch slippage, judder	Clutch slippage and judder in 1st, 2nd, 3rd and 4th gears
ATF (automatic transmission fluid) failure	ATF level poor								O				O	O	
	ATF level too low					O	O								
	ATF deteriorated								O						
	ATF is overheating							O							
Mechanical failures of automatic transmission body	Mechanical troubles of torque converter, shaft and planetary					O									
	Operation failure of lock-up clutch													O	
	C1 clutch failure								O						
	C1 clutch slippage														O
	C1 clutch plate worn														O
	C1 clutch not disengaged									O	O	O			
	C3 clutch not disengaged									O	O	O			
	Mechanical trouble of C5 clutch					O									
	Clutch clearance excessive								O						
	Slippage of related clutch and piston seal leaks												O		
Oil pressure failure of automatic transmission body	Oil pressure lowered					O	O		O				O	O	
	Control valve failure								O				O		
	Solenoid assembly leaks						O		O				O		

Possible causes	Symptoms	Clutch slippage and judder in 4th and 5th gears	Clutch slippage and judder in 3rd, 5th and reverse gears	Clutch slippage and judder in 2nd gear only	Clutch slippage and judder in 1st and reverse gears	Main oil pressure decline in all ranges	Lubricant pressure decline	Stall revolution high	Stall revolution low	Overheat in all ranges	Blowoff of ATF from breather and level	Occasional noise like a buzzer	ATF leaks from output side	ATF leaks from input side	Contamination of ATF
Engine failure	Engine output high							O							
	Engine output low								O						
	Engine is overheating									O					
Electrical system failure on automatic transmission body side	Oil temperature sensor failure									O					
ATF (automatic transmission fluid) failure	ATF level poor					O	O								
	ATF level too low							O	O		O	O			
	ATF level too high									O	O				
	ATF overheated														O
	ATF bubbles							O	O	O		O			
	ATF not replaced														O
Oil cooler failure	Oil cooler piping clogged, leaking						O			O					
	Oil cooler clogged						O								
	Ventilation to oil cooler hindered									O					
	Mixing of coolant										O				
Mechanical failures of automatic transmission body	Torque converter failure							O	O	O				O	
	C1 clutch slippage							O	O						
	C2 clutch slippage	O													
	C2 clutch plate worn	O													
	C3 clutch slippage		O												
	C3 clutch plate worn		O												
	C4 clutch slippage			O											
	C4 clutch plate worn			O											
	C5 clutch slippage				O			O	O						
	C5 clutch plate worn				O										
	Clutch pressure low							O	O						
Oil pressure failure of automatic transmission body	Oil pressure lowered											O			
	Oil pump failure					O								O	
	Inside leaks excessive						O			O					
	Control valve failure					O	O								
	Solenoid assembly leaks					O									

Possible causes \ Symptoms		Clutch slippage and judder in 4th and 5th gears	Clutch slippage and judder in 3rd, 5th and reverse gears	Clutch slippage and judder in 2nd gear only	Clutch slippage and judder in 1st and reverse gears	Main oil pressure decline in all ranges	Lubricant pressure decline	Stall revolution high	Stall revolution low	Overheat in all ranges	Blowoff of ATF from breather and level	Occasional noise like a buzzer	ATF leaks from output side	ATF leaks from input side	Contamination of ATF
Other failures of automatic transmission body	Filter element clogged					O									
	Filter element seal failure													O	
	Filter element not replaced														O
	Suction filter clogged					O	O					O			
	Air suction by suction filter											O			
	Level gauge seal failure										O				
	Breather clogged										O				
	Oil seal failure												O	O	
	Seal surface of companion flange damaged												O		
	Companion flange mounting area loosened												O		
	Rear cover failure												O		
	Front support bolt seal failure													O	
	Manifold seal failure													O	
	Main oil pressure plug seal failure													O	

ON-VEHICLE INSPECTION AND ADJUSTMENT

1. Inspection of Automatic Transmission Oil Leakage

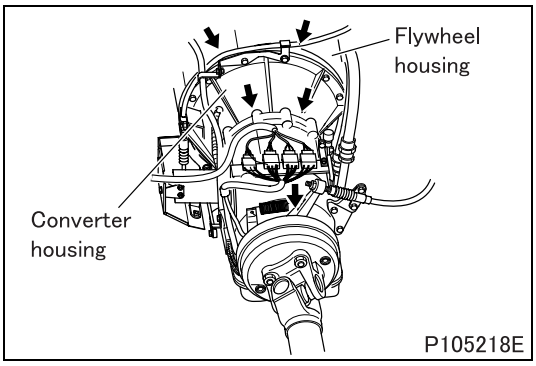

1.1 Inspection of oil leakage at each part of transmission body

- Check the oil leakage at each part of automatic transmission body in visual.
  If the oil leakage is found, replace the defective part.

1.2 Inspection of oil leakage around transmission mounting part

- Check there is not oil stain on flywheel housing and automatic transmission mounting part caused by oil leakage from engine.
- If there is the oil stain, remove the automatic transmission and clean the mounting surface of converter housing and flywheel housing using brake cleaner etc. after repairing oil leakage part. Because the oil stain may loosen the automatic transmission mounting bolts. (See “REMOVAL AND INSTALLATION OF AUTOMATIC TRANSMISSION”.)

2. Check for Looseness in Automatic Transmission Mounting Bolts and Nuts

Tightening torque (Unit: N·m {ft.lbs, kgf·m})

Mark	Parts to be tightened	Tightening torque	Remarks
–	Bolt or nut (automatic transmission mounting)	40.2 {30, 4.1}	–

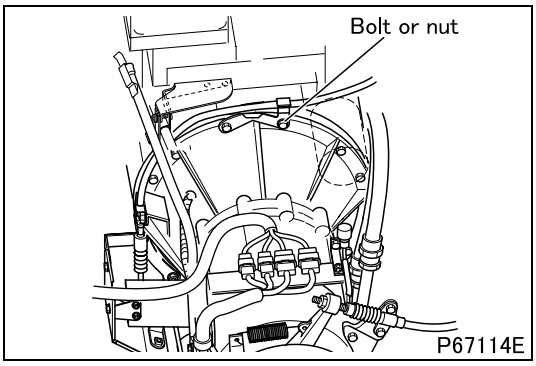

- Check the automatic transmission mounting bolts or nuts for looseness.
- Retighten any loose bolt or nut to the specified torque.

3. Inspection of Play and Looseness in Companion Flange

Tightening torque (Unit: N·m {ft.lbs, kgf·m})

Mark	Parts to be tightened	Tightening torque	Remarks
–	Bolt (companion flange mounting)	108 to 136 {80 to 100, 11 to 14}	–

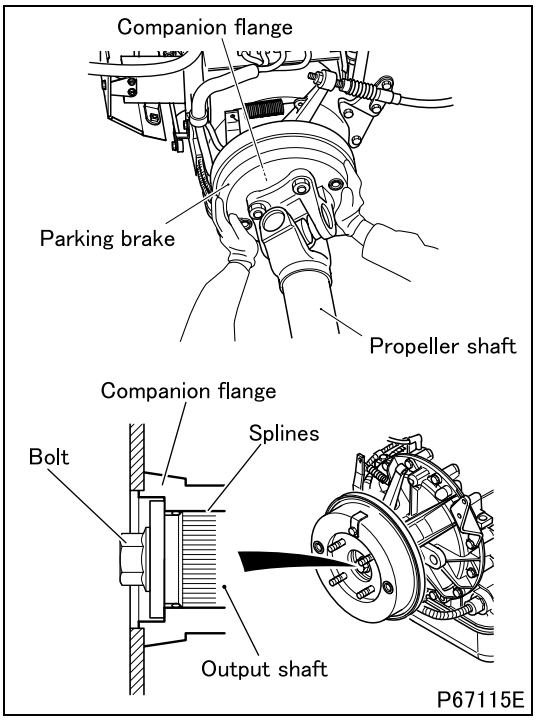

- Move the companion flange and parking brake <FK61> in axial and vertical directions to check for excessive play between the companion flange and output shaft.
- If excessive play is detected, remove the propeller shaft, then check the bolt for looseness and the splines on companion flange and output shaft for abnormalities.
- If any bolt is loose, tighten it to the specified torque.
- If the companion flange is found detective, replace the part. (See “parking brake”.)
- If the companion flange is not found defective, the output shaft may be defective, contact the Allison Service Station for repair.

4. Inspection of Automatic Transmission Cooling System

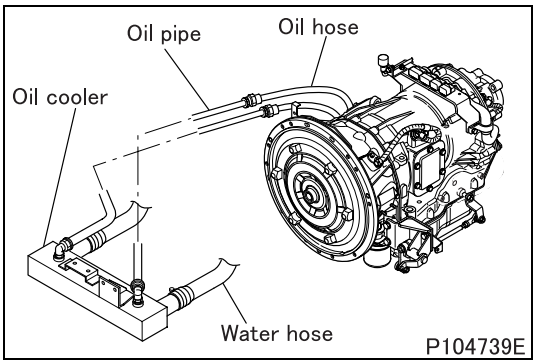

- Check the automatic transmission cooling system for fluid leak and damage. If any abnormality is found, replace the faulty part.

5. Inspection of Automatic Transmission Fluid

Lubricant and/or sealant

Mark	Points of application	Specified lubricant and/or sealant	Quantity
–	Automatic transmission	DEXRON III	As required

- If the automatic transmission fluid level is too low, the fluid is sucked inside with air from the pump and made sponge-like by produced air bubbles. When this occurs, the pressure is dropped and internal clutch may be caused to slip as a result.
- If the automatic transmission fluid level is too high due to improper refilling, the fluid is stirred up by rotating parts to produce air bubbles, bringing out the same result as when the fluid level is too low.
- In either case, air bubbles leads to overheating, oil oxidation and varnish production, preventing proper valve and clutch operations.
- Furthermore, bubbling causes automatic transmission fluid to spout from automatic transmission vent holes and filler tube, which could be mistaken for a leakage of automatic transmission fluid.
- To prevent these, check the exact quantity of automatic transmission fluid by the procedure described in the following.

5.1 Inspection of properties

- If having a burnt smell of automatic transmission fluid or finding out some worn particles of metal or friction materials, it is necessary to overhaul the transmission completely. Check automatic transmission fluid adhering to a level gauge carefully. If there are some doubts in a state of automatic transmission fluid, check the automatic transmission fluid again by it extracting its sample.

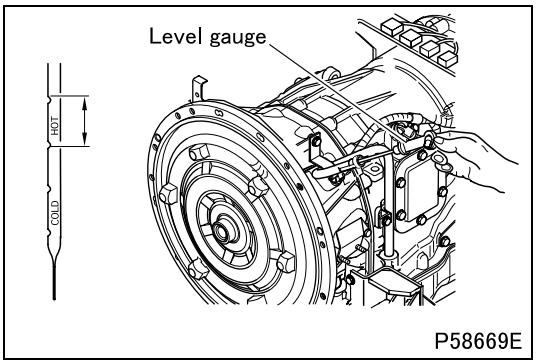

5.2 Inspection of quantity of automatic transmission fluid

CAUTION ⚠

- **Before performing the test, make sure there is no worker in front and at the rear of the vehicle.**

- Run the vehicle until automatic transmission fluid gets sufficiently warm (71 to 93°C {160 to 199°F}) (for reference: run the vehicle for 20 to 30 minutes).
- Place the vehicle on a flat place, engage the parking brake surely, and place chokes securely at the wheels.
- To fill automatic transmission fluid in a hydraulic circuit with the engine at idle, return the range selector lever to P range after putting it in D range and R range. Do not turn off the engine as the ATF level rises higher than the actual level when the engine is stationary.
- Do not raise the engine speed while keeping the engine at idle until the adjustment of quantity of automatic transmission fluid is completed.
- Remove any dirt of the protection cap and the upper part of level gauge guide completely.
- Pull out level gauge with the engine at idle; insert it again after wiping off automatic transmission fluid adhered; and after pulling it out, check the quantity of automatic transmission fluid.
- If automatic transmission fluid is within the HOT range of level gauge, it shows that the quantity of automatic transmission fluid is as specified.

- The COLD level indicated on the level gauge is just for reference when the fluid temperature is low. Inspection should be performed at high fluid temperature after driving.

CAUTION ⚠

- **Since the inspection is conducted with the engine running, be careful of being caught in components, burn hazard, or safety.**

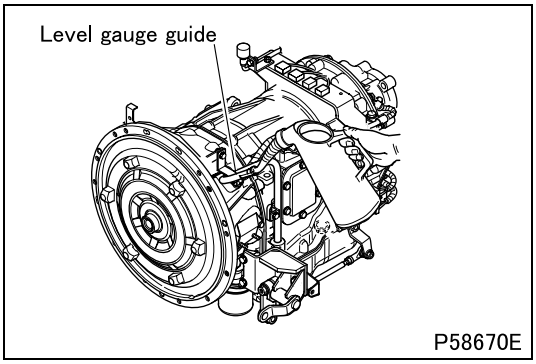

- In case the quantity of automatic transmission fluid is insufficient, replenish DEXRON III to the specified level of the level gauge from level gauge guide.

6. Replacement of Automatic Transmission Fluid

Tightening torque (Unit: N·m {ft.lbs, kgf·m})

Mark	Parts to be tightened	Tightening torque	Remarks
–	Drain plug	30 to 40 {22 to 30, 3.1 to 4.1}	–

Lubricant and/or sealant

Mark	Points of application		Specified lubricant and/or sealant	Quantity
–	Automatic transmission	FK61	DEXRON III	6 L {6.3 qts}
		Except FK61		9 L {9.5 qts}

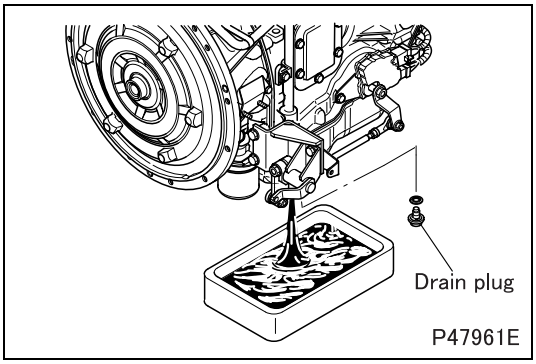

6.1 Discharge

- Place chokes at wheels on a flat place, and put the range selector lever in P range.
- Put an automatic transmission fluid receptacle under the transmission oil pan, then remove drain plug on the oil pan to discharge automatic transmission fluid. During draining, check the condition of the fluid and check if any metallic powder or metal pieces exist in the fluid. (Note that it is impossible to discharge automatic transmission fluid in the hydraulic circuit, the converter, and the oil cooler.) To discharge the automatic transmission fluid quickly, warm-up the engine.

CAUTION ⚠

- **Do not start any work for engine immediately after the engine is shut down. Wait until the engine cools to a safe temperature since a hot engine can cause burns.**

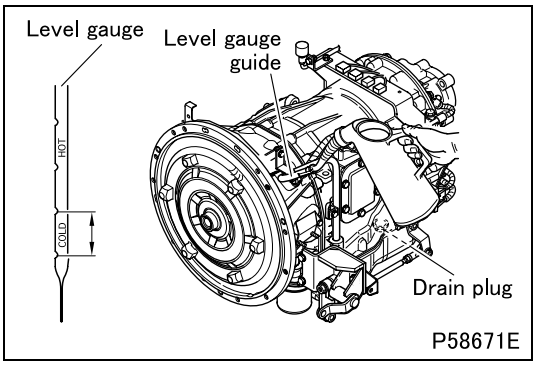

6.2 Pouring in

- Install oil pan drain plug.
- Pour in the specified quantity of DEXRON III from level gauge guide. Be careful not to allow any dust or foreign particles to enter.
- Put the range selector lever in P range, start the engine, and run the engine at idle for approximately one minute.
- After putting the range selector lever in each range, engage it to P range again.

CAUTION ⚠

- **In this process, run the engine at idle only; make sure to avoid revving the engine.**

- Replenish automatic transmission fluid until it reaches the low position of the specified range of level gauge. Then, check the level of automatic transmission fluid. The level of automatic transmission fluid must be within the specified range of the level gauge.
- Immediately after pouring in automatic transmission fluid, it may be difficult to clearly see the level of automatic transmission fluid due to the automatic transmission fluid adhering to the inner wall of level gauge guide; therefore, check the level again after a while.
- As the temperature rises, the level of automatic transmission fluid rises. Therefore, do not pour in automatic transmission fluid above the COLD level (A range) of level gauge while the temperature is low.
- Keep the engine at idle, and pour in automatic transmission fluid gradually while paying attention to the level of automatic transmission fluid.

7. Replacement of Oil Filter

Lubricant and/or sealant

Mark	Points of application	Specified lubricant and/or sealant	Quantity
–	Gasket of oil filter	DEXRON III	As required

CAUTION ⚠

- **Do not start any work for engine immediately after the engine is shut down. Wait until the engine cools to a safe temperature since a hot engine can cause burns.**

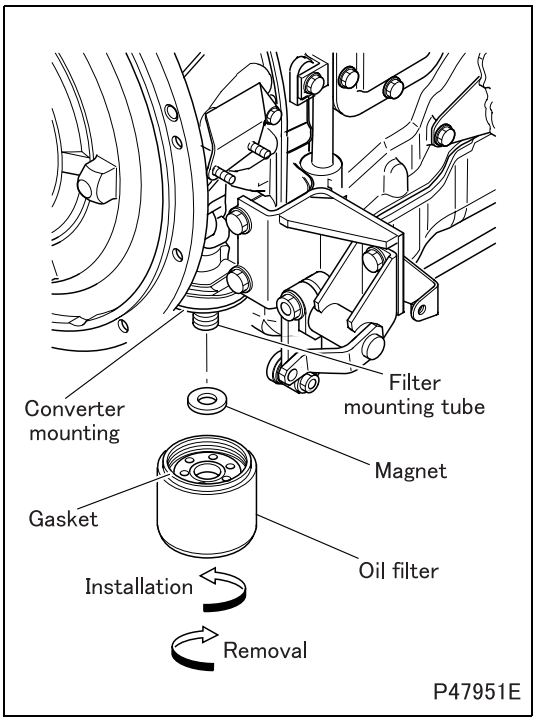

[Removal]

- Remove oil filter using a commercially available filter wrench.
- Remove magnet from filter mounting tube.
- Check for any existence of metallic powder or metal pieces.

[Installation]

- Clean magnet before installation.
- Clean magnet with wash oil.
- Clean the oil filter mounting surface of converter housing.
- Apply a thin coat of “DEXRON III” to gasket of oil filter.
- Screw in the filter by hand until gasket contacts converter housing.
  In addition, tighten it one turn by hand.

CAUTION ⚠

- **Do not overtighten oil filter using a wrench. Overtightening can damage the oil filter, causing leaks of automatic transmission fluid.**

- After installing oil filter, start the engine to make sure that no automatic transmission fluid leaks from gasket.
- Check the quantity of automatic transmission fluid. If the quantity is insufficient, replenish.

8. Stall Test

Service standards

Location	Maintenance item	Standard value	Limit	Remedy
–	Stall revolution	1900 ± 150 rpm	–	Ask for repair.

- Conduct a stall test only as a troubleshooting procedure. Do not conduct a stall test as general inspection or maintenance.

8.1 Purpose

- A stall test is conducted to determine whether power failure is caused by engine troubles or malfunction of the transmission.
- The stall speed is the maximum engine speed when the engine is at full throttle and the torque converter turbine does not rotate, namely in a state of stall.

8.2 Measurement procedure

CAUTION ⚠

- **Before performing the test, make sure there is no worker in front and at the rear of the vehicle.**

- Before starting the test, check the coolant and oil of the engine, and automatic transmission fluid level of the automatic transmission. Also sufficiently warm up the engine and transmission.
  - Place chocks at both front and rear wheels and engage the parking brake to prevent the vehicle from moving. In addition, when pushing the accelerator pedal down, press the foot brake strongly.
  - Start the engine and engage the range selector lever into D range.
  - Push the accelerator pedal down slowly to the full throttle; when the engine becomes stable at a constant speed, read the revolution (stall revolution) quickly, and then take off the foot from the accelerator pedal.

CAUTION ⚠

- **Be sure to set a full stall acceleration time less than 10 seconds and complete the measurement within that time, otherwise overheating of the engine and transmission may result.**

- Put the range selector lever in N range, and run the engine for two minutes between 1200 and 1500 rpm to cool automatic transmission fluid.

8.3 Result of diagnosis

- In case the stall revolution is lower by 150 rpm or more than the standard value, engine failure may be the cause.
- In case the stall revolution is abnormally low (approximately 1/3 of the specified value) even though there is no engine failure such as emitting black smoke, failure inside the torque converter (one-way clutch failure) may be the cause.
- In case the stall revolution is higher by 150 rpm or more than the standard value, slippage inside the transmission, cavitation, bubbling of automatic transmission fluid, or damage to the torque converter may be the cause.
- If the automatic transmission proper is found defective, contact the Allison Service Station for repair.

9. Line Pressure Test

Service standards

Location	Maintenance item			Standard value	Limit	Remedy
–	Line pressure	Engine speed 600 rpm	Forward movement (during lockup deactivated)* R (reverse)	700 to 1280 kPa {100 to 185 psi, 7.1 to 13 kgf/cm^2}	–	Ask for repair.
			N (neutral) P (parking)	800 to 1655 kPa {115 to 240 psi, 8.2 to 17 kgf/cm^2}		
		Engine speed 2100 rpm	Forward movement (during lockup)*	1000 to 1170 kPa {145 to 170 psi, 10.2 to 11.9 kgf/cm^2}		
			Forward movement (during lockup deactivated)* R (reverse) N (neutral) P (parking)	1515 to 1795 kPa {220 to 260 psi, 15.4 to 18.3 kgf/cm^2}		

* See the next page for lockup vehicle speed.

Tightening torque (Unit: N·m {ft.lbs, kgf·m})

Mark	Parts to be tightened	Tightening torque	Remarks
–	Plug	10 to 13 {7.4 to 9.6, 1.0 to 1.3}	–

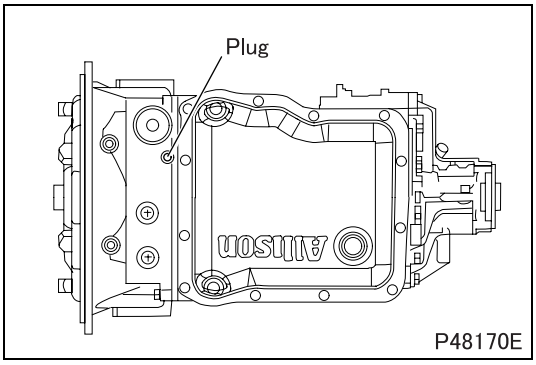

9.1 Purpose

- "Line pressure test" checks the performance of oil pump, function of control valve, and the oil leaking of each component.

9.2 Measurement procedure

- Remove main oil pressure plug (7/16 UNF-2A) on the lower part of the transmission case, and install the pressure gauge.
- Be sure to prevent foreign particles from entering the pressure detecting port.
- Conduct a sufficient warm-up operation, and raise oil temperature to 60 to 80°C {140 to 176°F} (for reference: run the vehicle for 20 to 30 minutes).
- Lift up the vehicle so that the rear wheels can rotate.
- Measure the oil pressure in each range when the engine runs at 600 rpm and 2100 rpm, and make sure whether the result is within the standard value.
- When having finished the measurement, remove foreign particles in the pressure detection port before installing the plug, then tighten plug to the specified torque.

9.3 Diagnosis of result

- The main oil pressure is low in all ranges.
  - Too low automatic transmission fluid level
  - Clogged filter element
  - Clogged suction filter
  - Faulty control valve (leaking or sticking inside)
  - Worn or damaged oil pump
- If the automatic transmission proper is found defective, contact the Allison Service Station for repair.

10. Road Test

Service standards (Unit: km/h {mph})

Location	Maintenance item			Standard value	Limit	Remedy
–	Shifting point (D range) [Economy mode/ Power mode]	At half throttle Accelerator opening: 4/8	1st → 2nd	10 to 13 {6 to 8}/ 12 to 15 {7 to 9}	–	Ask for repair.
			2nd → 3rd	23 to 26 {14 to 16}/ 26 to 29 {16 to 18}	–	
			3rd → 4th	33 to 36 {21 to 22}/ 34 to 37 {21 to 23}	–	
			4th → 5th	48 to 51 {30 to 32}/ 48 to 51 {30 to 32}	–	
		At full throttle Accelerator opening: 8/8	1st → 2nd	16 to 19 {10 to 12}/ 21 to 24 {13 to 15}	–	
			2nd → 3rd	37 to 40 {23 to 44}/ 45 to 48 {28 to 30}	–	
			3rd → 4th	48 to 51 {30 to 32}/ 59 to 62 {37 to 39}	–	
			4th → 5th	68 to 71 {42 to 44}/ 84 to 87 {52 to 54}	–	
		At closed throttle Accelerator opening: 0/8	5th → 4th	45 to 48 {28 to 30}/ 45 to 48 {28 to 30}	–	
			4th → 3rd	32 to 35 {20 to 22}/ 32 to 35 {20 to 22}	–	
			3rd → 2nd	22 to 25 {14 to 16}/ 22 to 25 {14 to 16}	–	
			2nd → 1st	5 to 8 {3 to 5}/ 5 to 8 {3 to 5}	–	
–	Lock-up point [Economy mode/ Power mode] (reference)	At half throttle Accelerator opening: 4/8	OFF → ON	17 to 21 {11 to 13}/ 20 to 23 {12 to 14}	–	Ask for repair.
		At full throttle Accelerator opening: 8/8	OFF → ON	31 to 34 {19 to 21}/ 38 to 41 {24 to 26}	–	
		At closed throttle Accelerator opening: 0/8	ON → OFF	16 to 19 {10 to 12}/ 16 to 19 {10 to 12}	–	

10.1 Measuring procedure

- Before starting the road test, make sure that the transmission fluid level has been checked, the fluid has been inspected and the selector cable has been adjusted.
- During the road test, operate the automatic transmission with gears shifted into different positions and check for the feeling of a gear slip and any other abnormalities.
- Check for too hard or too soft feeling of gear shift.
- Check for shift-up and shift-down points.
- The value shown in the table is calculated under the following condition.
  For the vehicle with different differential ratio or tire size, the vehicle speed varies from the value in the table. In such case, the value should be converted based on such deviation.

Differential ratio	Tire size (radius)
6.166	10R22.5 (0.492)

- If the measurement is out of specification, contact the Allison service station for repair.

REMOVAL AND INSTALLATION OF AUTOMATIC TRANSMISSION

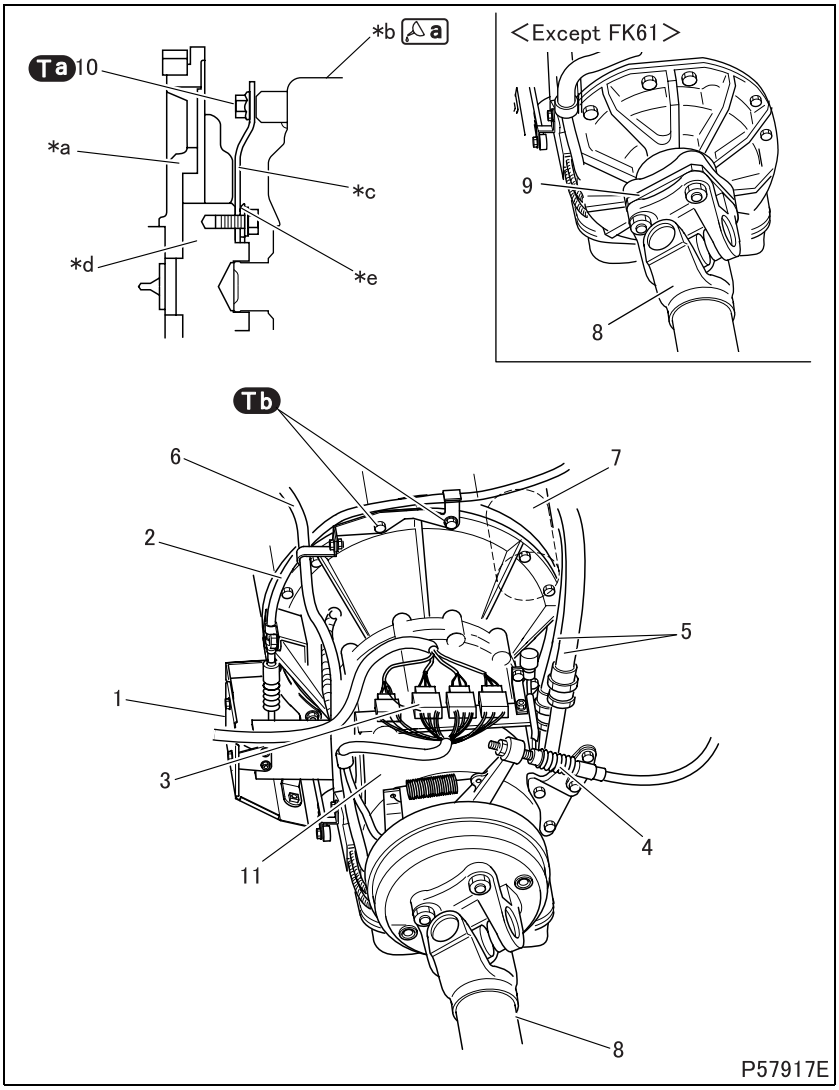

● **Removal sequence**

1 Control cover
2 Selector cable (See AUTOMATIC TRANSMISSION CONTROL.)
3 Harness connector
4 Parking brake cable
5 Oil hose (See OIL COOLER.)
6 Level gauge
7 Starter (See Gr54.)
8 Propeller shaft (See Gr25.)
9 Spacer <Except FK61>
10 Flex bolt
11 Automatic transmission

***a:** Flywheel
***b:** Torque converter
***c:** Flex plate
***d:** Flywheel adapter
***e:** Wear plate

● **Installation sequence**

Follow the removal sequence in reverse.

CAUTION ⚠

- **Be sure to adjust the automatic transmission fluid level after installation. As starting the engine with insufficient automatic transmission fluid can damage the automatic transmission.**

Tightening torque (Unit: N·m {ft.lbs, kgf·m})

Mark	Parts to be tightened	Tightening torque	Remarks
Ta	Flex bolt (connection of flywheel and torque converter)	56 ± 5 {41 ± 3.7, 5.7 ± 0.5}	–
Tb	Bolt or nut (automatic transmission mounting)	40.2 {30, 4.1}	–

Lubricant and/or sealant

Mark	Points of application	Specified lubricant and/or sealant	Quantity
a	Torque converter pilot area	Molybdenum disulfide grease [NLGI No. 2 (Li soap)]	As required

Special tools

Mark	Tool name and shape	Part No.	Application
a	Converter installer 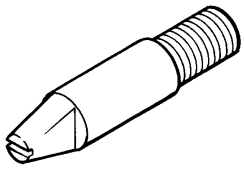 03726	ME633437	Automatic transmission mounting

◆Removal procedure◆

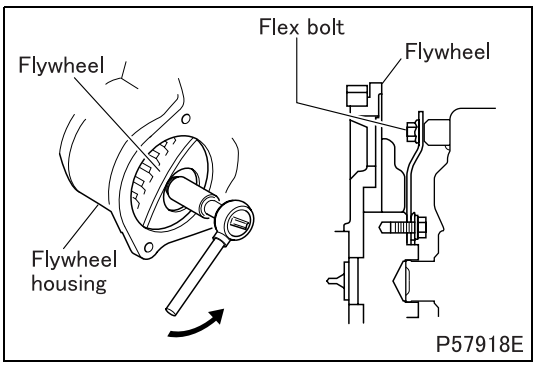

■ **Removal: Automatic transmission**

- Place the automatic transmission in N range.
- Turn flywheel to remove flex bolts in succession.

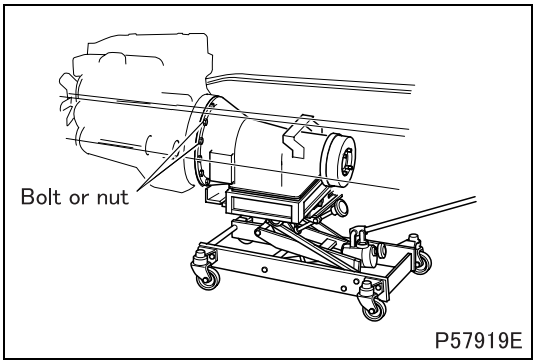

- Pinch the oil pan of automatic transmission with blocks of wood, and support it with jack to remove automatic transmission mounting bolt or nut.
- Remove automatic transmission by pulling it out backward.

CAUTION ⚠

- **Be careful not to allow local force to be applied to the oil pan.**
- **Secure torque converter with wire to prevent it from falling off.**

◆Installation procedure◆

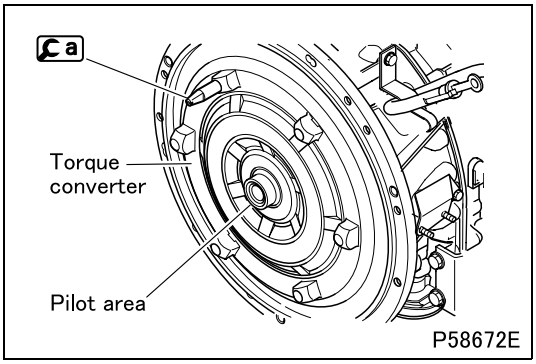

■ **Installation: Automatic transmission**

- Apply grease to pilot area of torque converter.
- Install a at least one location in the tapped hole on the periphery of torque converter.

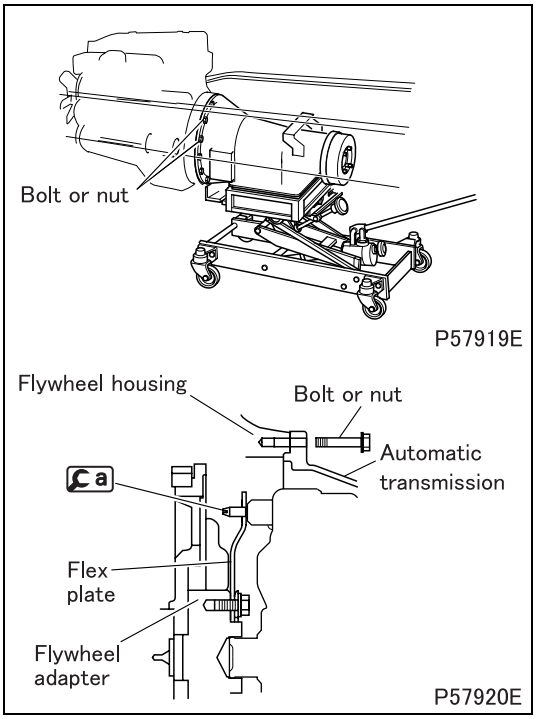

- Install automatic transmission on flywheel housing so that Ca aligns with the hole in the flex plate installed on the flywheel.
- Tighten automatic transmission mounting bolt or nut to the specified torque.

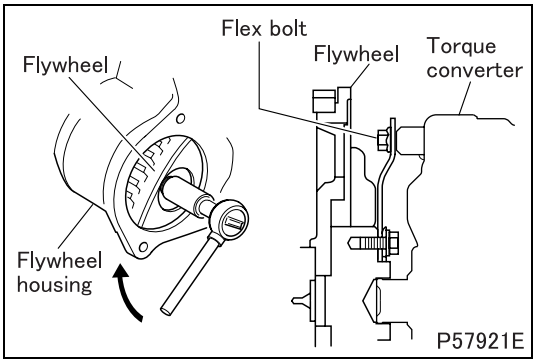

- Turn flywheel, and temporarily tighten flex bolts in succession from the starter window (six locations).
- Where Ca is installed, remove Ca to install flex bolts.
- Finally, fully tighten flex bolts to the specified torque.

CAUTION ⚠

- **Be careful not to drop flex bolts in the clearance between flywheel and torque converter during operation.**

M E M O

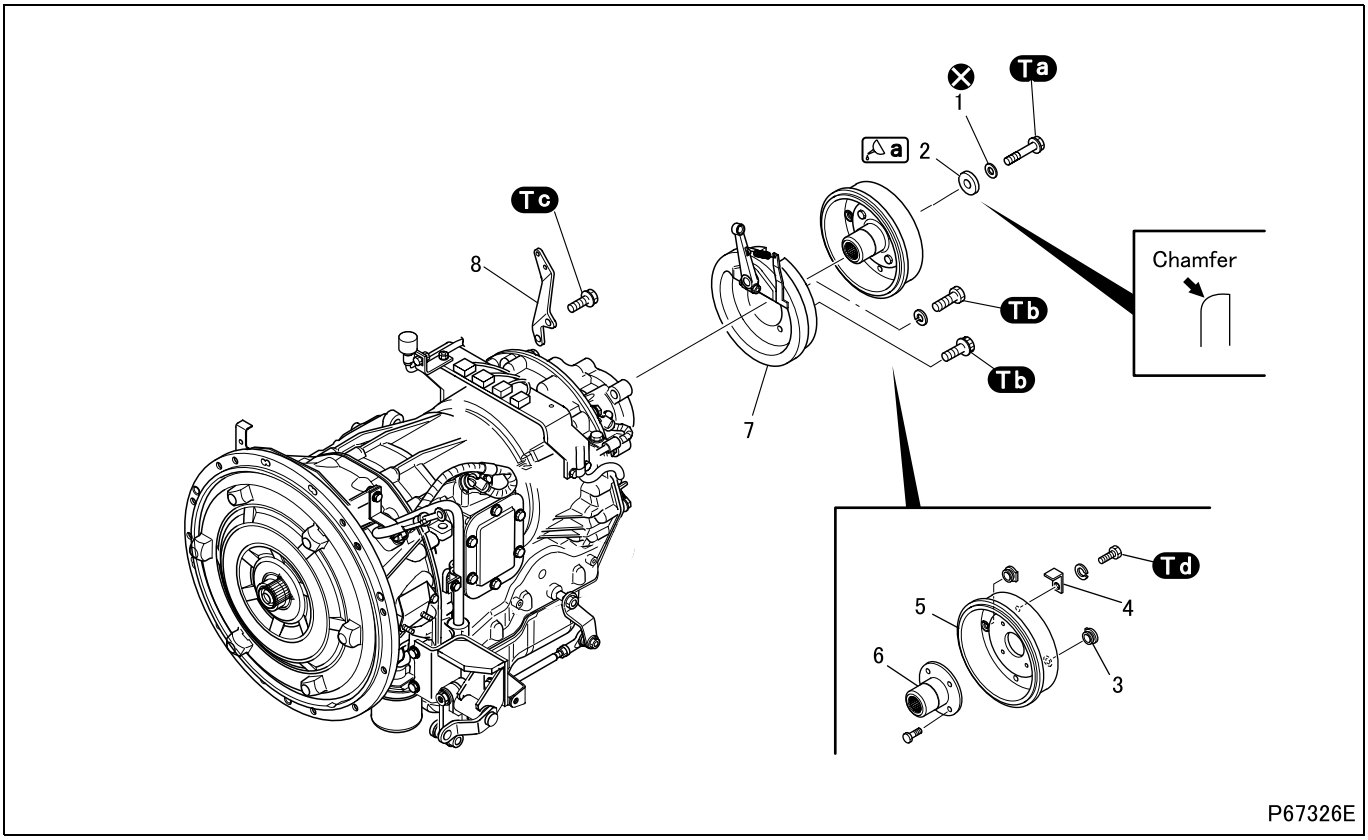

● **Disassembly sequence**

1 Sealing washer
2 Retainer washer
3 Dust plug
4 Drum plate
5 Parking brake drum
6 Companion flange
7 Parking brake (See Gr36A.)
8 Wire bracket

⊗: Non-reusable parts

CAUTION ⚠

- **Do not disassemble parking brake drum and companion flange unless necessary since they are balanced. When disassembling them, put mating marks and align them to assemble. In addition, do not replace the parking brake drum or companion flange as a single unit.**

● **Assembly sequence**

Follow the disassembly sequence in reverse.

Service standards (Unit: mm {in.})

Location	Maintenance item		Standard value	Limit	Remedy
5	Parking brake drum	Inner diameter	$\phi 254^{+0.5}_{0}$ {$10^{+0.020}_{0}$}	ϕ255.5 {10.1}	Replace
		Squareness	0 to 0.05 {0 to 0.0020}	–	
		Coaxial trueness	0 to 0.1 {0 to 0.0039}	–	
		Cylindrical trueness	0 to 0.05 {0 to 0.0020}	–	
		Static revolution unbalance	0 to 0.88 N·cm {0 to 0.0065 ft.lbs, 0 to 90 gf·cm}	–	
6	Runout at socket portion of companion flange		0 to 0.15 {0 to 0.0059}	0.5 {0.020}	Replace

Tightening torque (Unit: N·m {ft.lbs, kgf·m})

Mark	Parts to be tightened	Tightening torque	Remarks
Ta	Bolt (companion flange mounting)	108 to 136 {80 to 100, 11 to 14}	–
Tb	Bolt (parking brake mounting)	228 to 266 {170 to 195, 23.3 to 27.1}	–
Tc	Bolt (wire bracket mounting)	51 to 61 {38 to 45, 5.2 to 6.2}	–
Td	Bolt (drum plate mounting)	20 {15, 2.0}	–

Lubricant and/or sealant

Mark	Points of application	Specified lubricant and/or sealant	Quantity
a	Periphery of retainer washer	ThreeBond 1215	As required

Special tools (Unit: mm {in.})

Mark	Tool name and shape	Part No.	Application
a	Flange puller A: 14 {0.55}, B: 122 {4.80}, C: M16 × 2.0 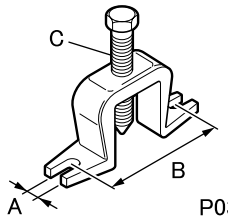	MC881524	Removal of parking brake drum and companion flange

◆Removal procedure◆

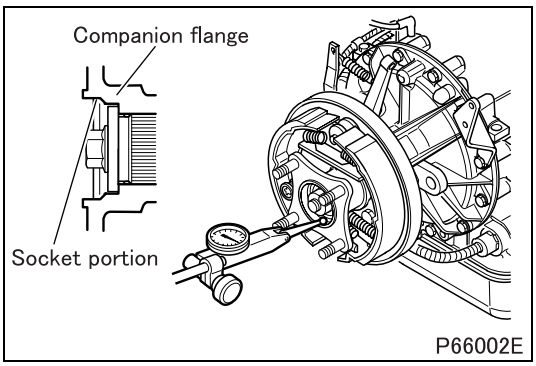

■ **Inspection: Runout of socket portion of companion flange**

- Replace the companion flange if the measured value is higher than the limit.

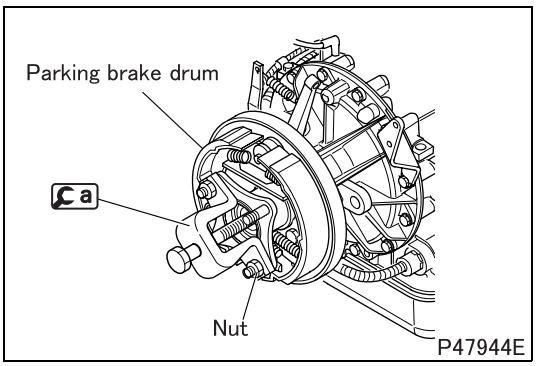

■ **Removal: Parking brake drum and companion flange**

- Install a using the propeller shaft mounting nut and remove the parking brake drum and companion flange.

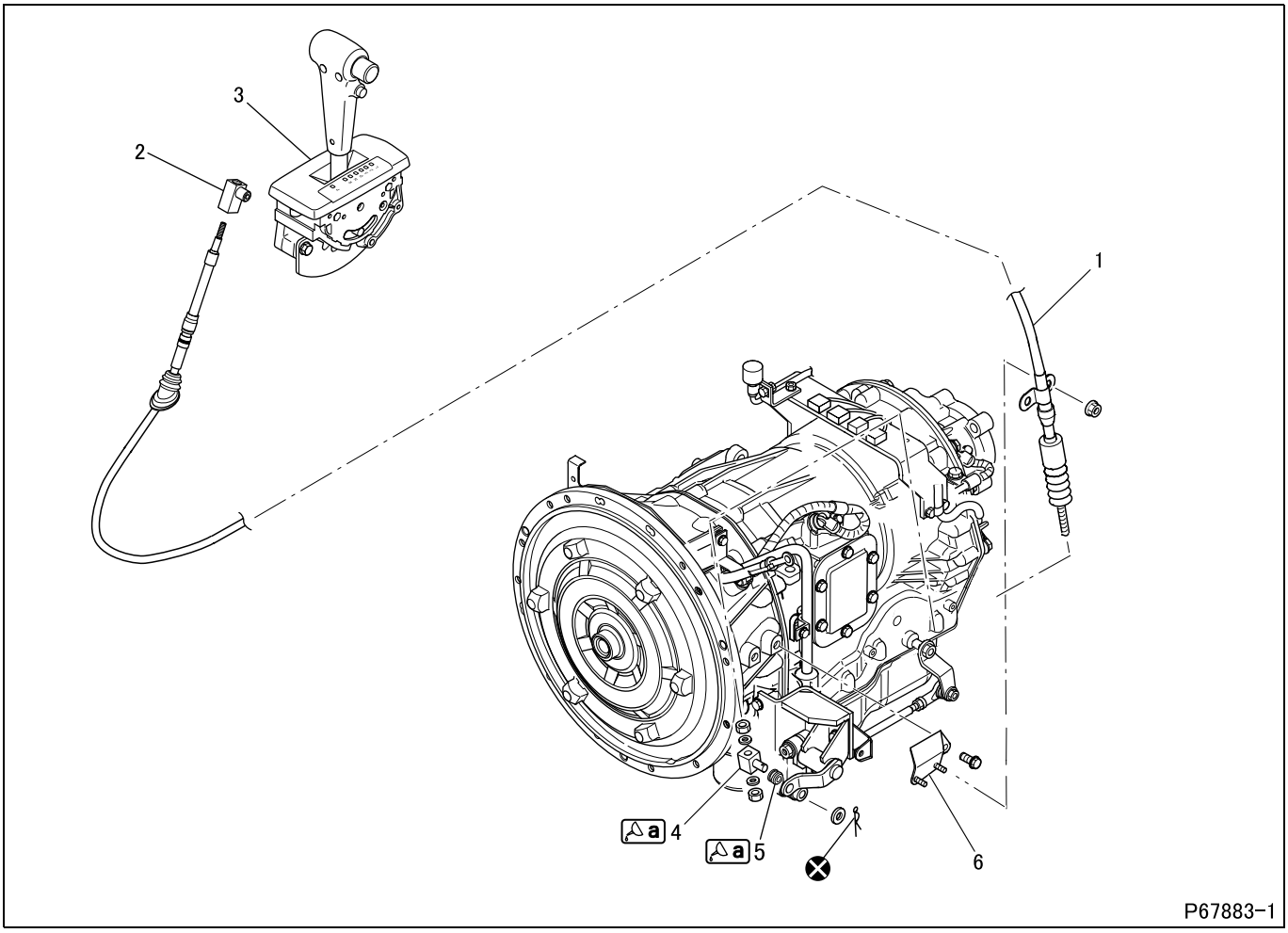

● **Removal sequence**

1 Selector cable
2 Pivot
3 Range selector lever
4 Adjuster
5 Bushing
6 Cable bracket

⊗: Non-reusable parts

● **Installation sequence**

Follow the removal sequence in reverse.

- Be sure to use a nut precoated with thread lock cement to connect the cable to the range selector lever in the cab.

Lubricant and/or sealant

Mark	Points of application	Specified lubricant and/or sealant	Quantity
a	Sliding area of adjuster and bushing	Wheel bearing grease [NIGI No.2 (Li soap)]	As required

◆Installation procedure◆

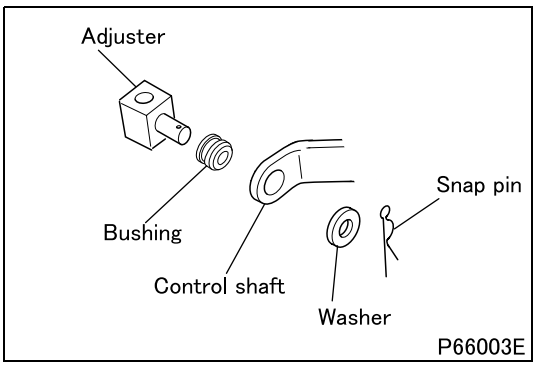

■ **Installation: Adjuster**

- Fit the adjuster to the control shaft and prevent it from coming off with the snap pin. Then, check that the adjuster smoothly rotates in the control shaft.
- If the adjuster does not turn smoothly, replace it together with the washer, snap pin and control shaft. Replace the bushing as well if it is worn out or damaged.

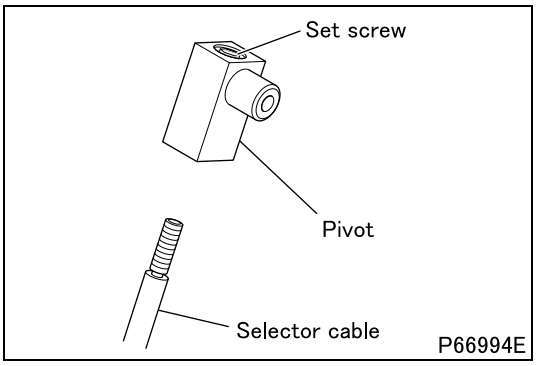

■ **Installation: Pivot**

- Install the pivot onto the threaded end of the selector cable. Using the setscrew on top of it, position the pivot to face in necessary direction.

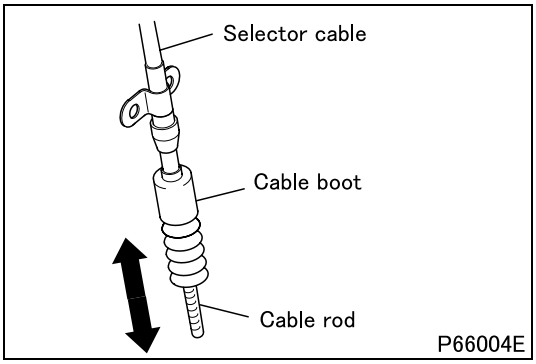

■ **Installation: Selector cable**

- Connect the selector cable to the interior range selector lever. Then, give strokes to the selector lever and if it does not move smoothly, replace the selector cable.
- Replace the selector cable if the cable boot or cable rod is damaged.

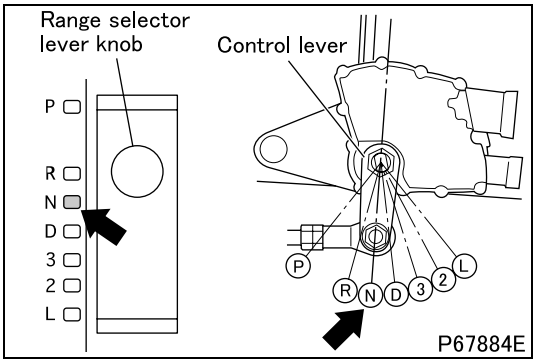

- With the parking brake in operation, set the range selector lever knob and control lever to the respective N range positions.

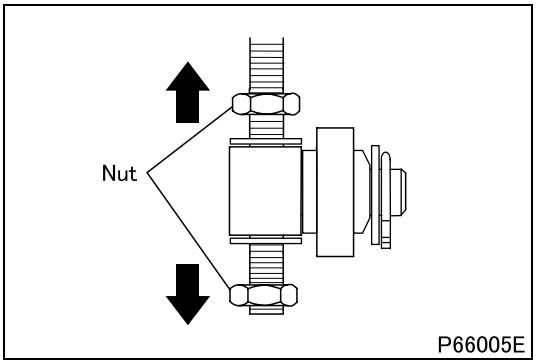

- Loosen the upper and lower nuts as far as the thread ends of the selector cable.

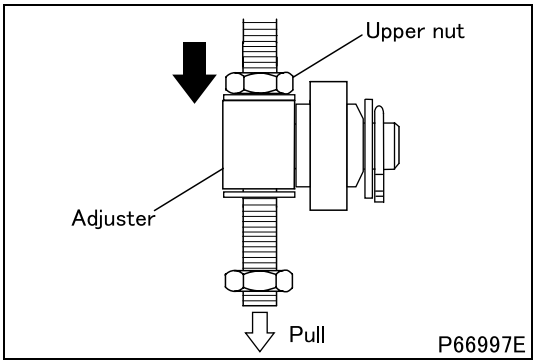

- Pull down the wire end with a force of 10 to 20 N {7.4 ft.lbs (1 to 2 kgf)}.
- Tighten the upper nut by hand until it contacts the adjuster with the load applied.

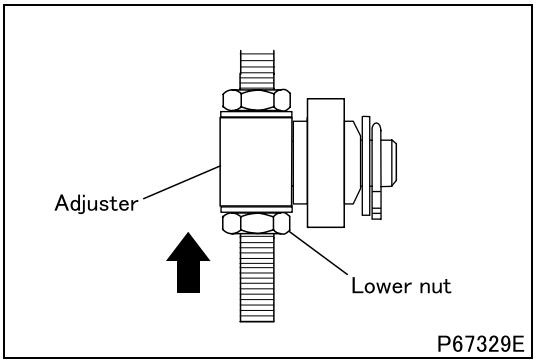

- Tighten the lower nut to the specified torque.

CAUTION ⚠

- **When tightening the nut, hold the adjuster in position.**

◆Inspection after installation◆

■Inspection: Selector cable

[Inspection]

- Park the vehicle on a flat ground and put the chocks under the wheels. Apply the parking brake.
- Place the range selector lever to the P range position.
- Operating the range selector lever from one position to another (P to L range and L to P range), make sure that the lever feels no resistance, the operating physical forces to pull (to the L side) and push (to the P side) are almost equal and that gear shift is felt distinctively.

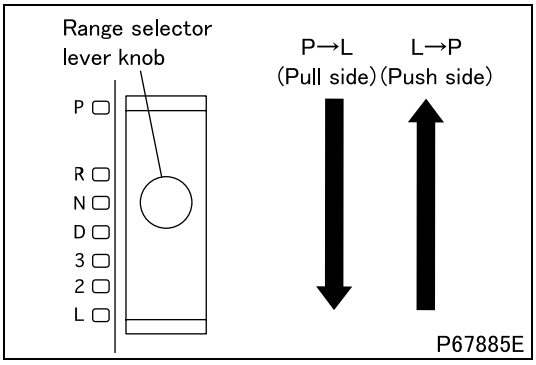

- Set the starter switch to ON. (Do not start the engine.)
- Operating the range selector lever from one position to another (P to L range and L to P range), check that the lever positions are in agreement with the range positions indicated by the shift position indicator in the meter cluster. (When shifting from R range to P range, move the lever very slowly.)
- See the shift position indicator in the meter cluster to confirm that the transmission is in P range.
- If there is abnormality, adjust the selector cable.

[Adjustment]

<If the lever is heavy when operated in pushing direction (toward P range), or the indication of the shift position indicator is incorrect (deviated in pulling direction)>

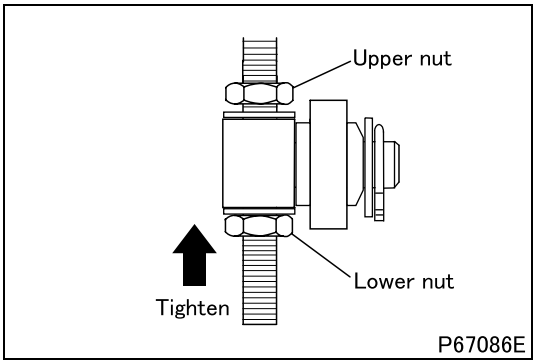

- Loosen the upper nut, and tighten the upper nut as much as a 1/2 turn.
- Tighten the upper nut to the specified torque.
- Perform the above inspection again and repeat the adjustment if necessary.

<If the lever is heavy when operated in pulling direction (toward L range), or the indication of the shift position indicator is incorrect (deviated in pushing direction)>

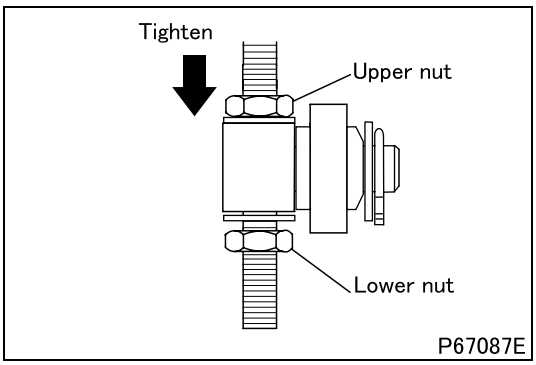

- Loosen the lower nut, and tighten the upper nut as much as a 1/2 turn.
- Tighten the lower nut to the specified torque.
- Perform the above inspection again and repeat the adjustment if necessary.

Control Lever

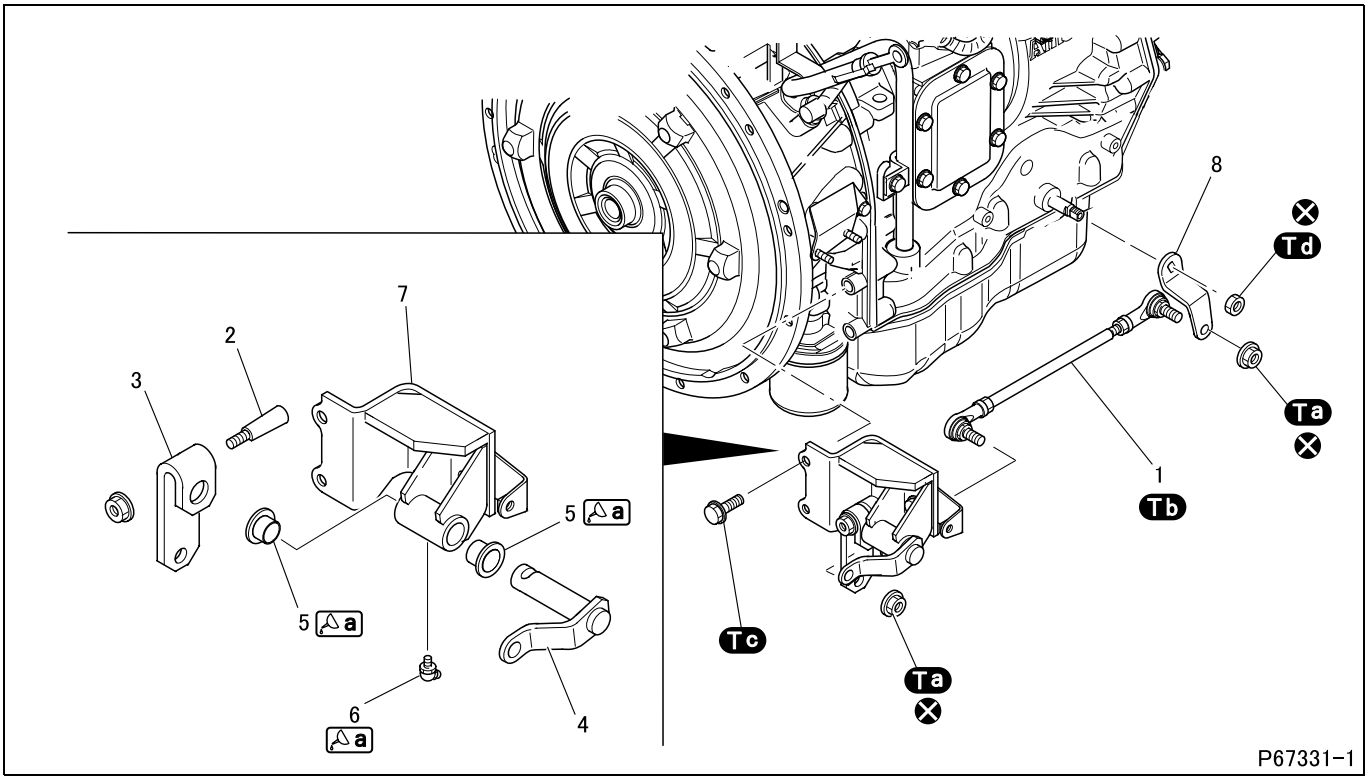

● **Disassembly sequence**

1 Shift rod
2 Lock pin
3 Select lever
4 Control shaft
5 Bushing
6 Grease nipple
7 Control bracket
8 Control lever

⊗: Non-reusable parts

- Do not disassemble lever except for replacement.

● **Assembly sequence**

Follow the disassembly sequence in reverse.

Tightening torque (Unit: N·m {ft.lbs, kgf·m})

Mark	Parts to be tightened	Tightening torque	Remarks
Ta	Nut (shift rod mounting)	39 to 50 {28 to 36, 3.9 to 5.0}	–
Tb	Tightening of shift rod nut	23 to 28 {17 to 20, 2.3 to 2.8}	–
Tc	Bolt (control bracket mounting)	51 to 61 {38 to 45, 5.2 to 6.2}	–
Td	Nut (control lever mounting)	20 to 27 {15 to 20, 2.0 to 2.7}	–

Lubricant and/or sealant

Mark	Points of application	Specified lubricant and/or sealant	Quantity
a	Greasing from grease nipple	Chassis grease [NLGI No.1 (Li soap)]	As required
	Inside surface of bushing		

◆Installation procedure◆

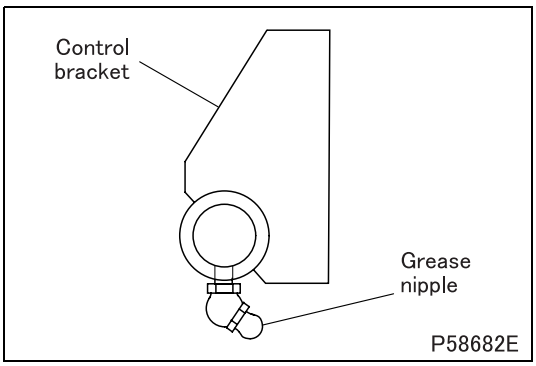

■ **Installation: Grease nipple**

- Screw in grease nipple 2 to 4 mm {0.079 to 0.16 in.} (approx. 3 to 5 turns) to install it to the control bracket in the direction shown in the drawing.

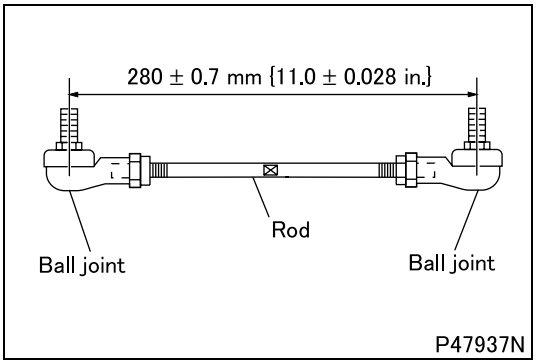

■ **Installation: Shift rod**

- Turn rod to adjust length of shift rod.
- Adjustment should be performed evenly on both the right and left ball joints.

OIL COOLER

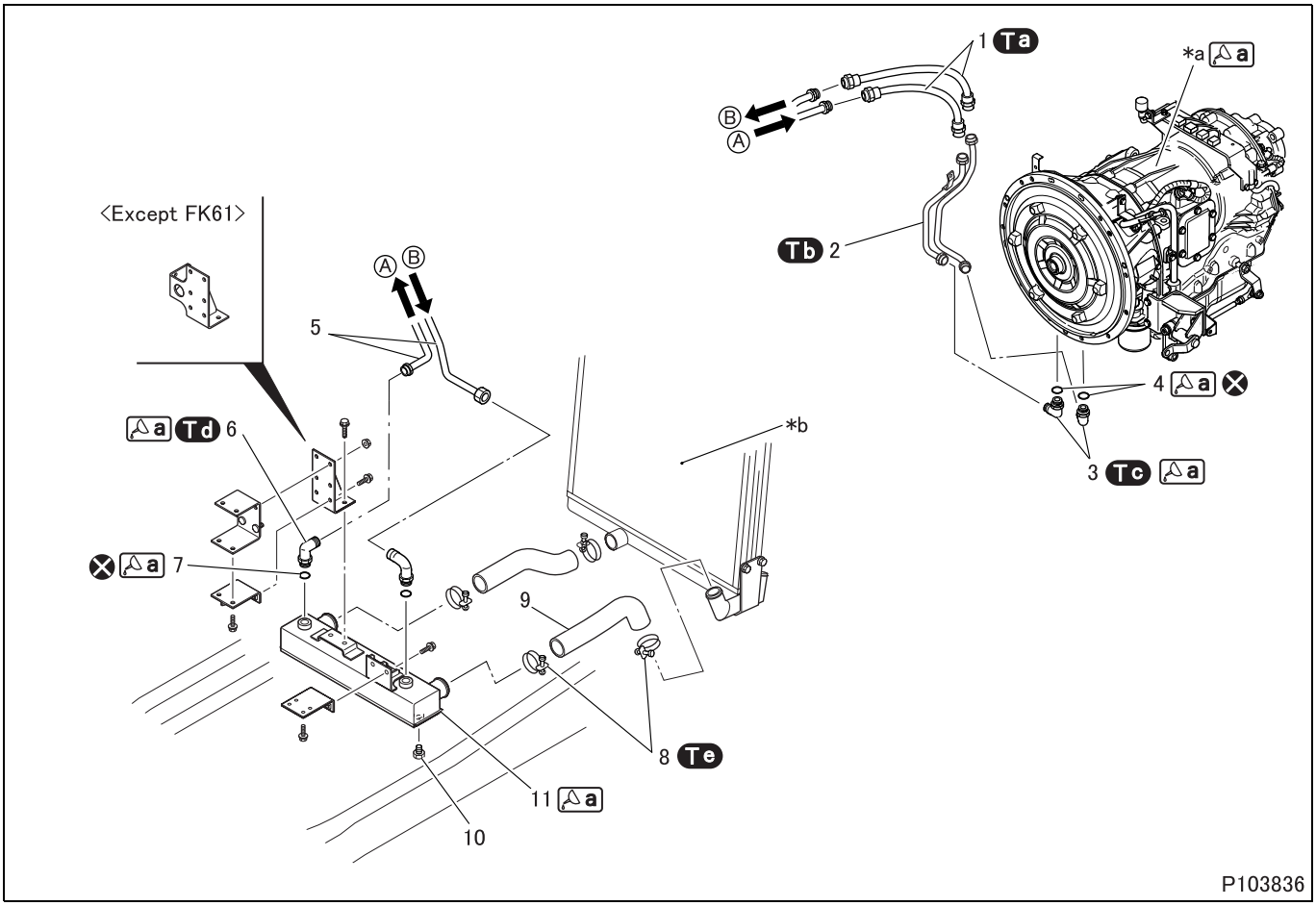

● **Removal sequence**

1 Oil hose
2 Oil pipe
3 Connector
4 O-ring
5 Oil pipe
6 Connector
7 O-ring
8 Clamp
9 Water hose
10 Drain plug
11 Oil cooler

***a:** Automatic transmission body
***b:** Radiator
⊗: Non-reusable parts

● **Installation sequence**

Follow the removal sequence in reverse.

Tightening torque (Unit: N·m {ft.lbs, kgf·m})

Mark	Parts to be tightened	Tightening torque	Remarks
Ta	Oil hose	118 ± 10 {87 ± 7.4, 12.0 ± 1.0}	–
Tb	Oil pipe	51 to 61 {38 to 45, 5.2 to 6.2}	–
Tc	Tightening of connector lock nut	41 ± 6 {30 ± 4.4, 4.2 ± 0.6}	–
Td	Tightening of connector lock nut	80 {59, 8.2} or less	–
Te	Clamp	3.9 ± 0.6 {2.9 ± 0.4, 0.4 ± 0.06}	–

Lubricant and/or sealant

Mark	Points of application	Specified lubricant and/or sealant	Quantity
a	O-ring contact surface of connector	DEXRON III	As required
	O-ring		
	O-ring contact surface of oil cooler		
	O-ring contact surface of automatic transmission body		

◆Installation procedure◆

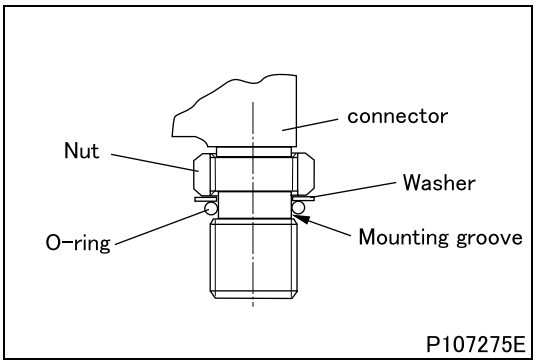

■ Installation: Connector

- Tighten the nut of the connector by hand until it touches the connector and install the O-ring securely in the mounting groove.
- Tighten the connector by hand until the washer touches the automatic transmission or oil cooler and then loosen it to the connection angle to the oil pipe.
- While keeping the connector in this position, tighten the nut to the automatic transmission or oil cooler side to the specified torque.

◆Inspection after installation◆

■Inspection: Quantity of automatic transmission fluid

- If any oil line has removed, check the quantity of automatic transmission fluid and add as necessary.

PARTS REPLACEMENT OF AUTOMATIC TRANSMISSION PROPER

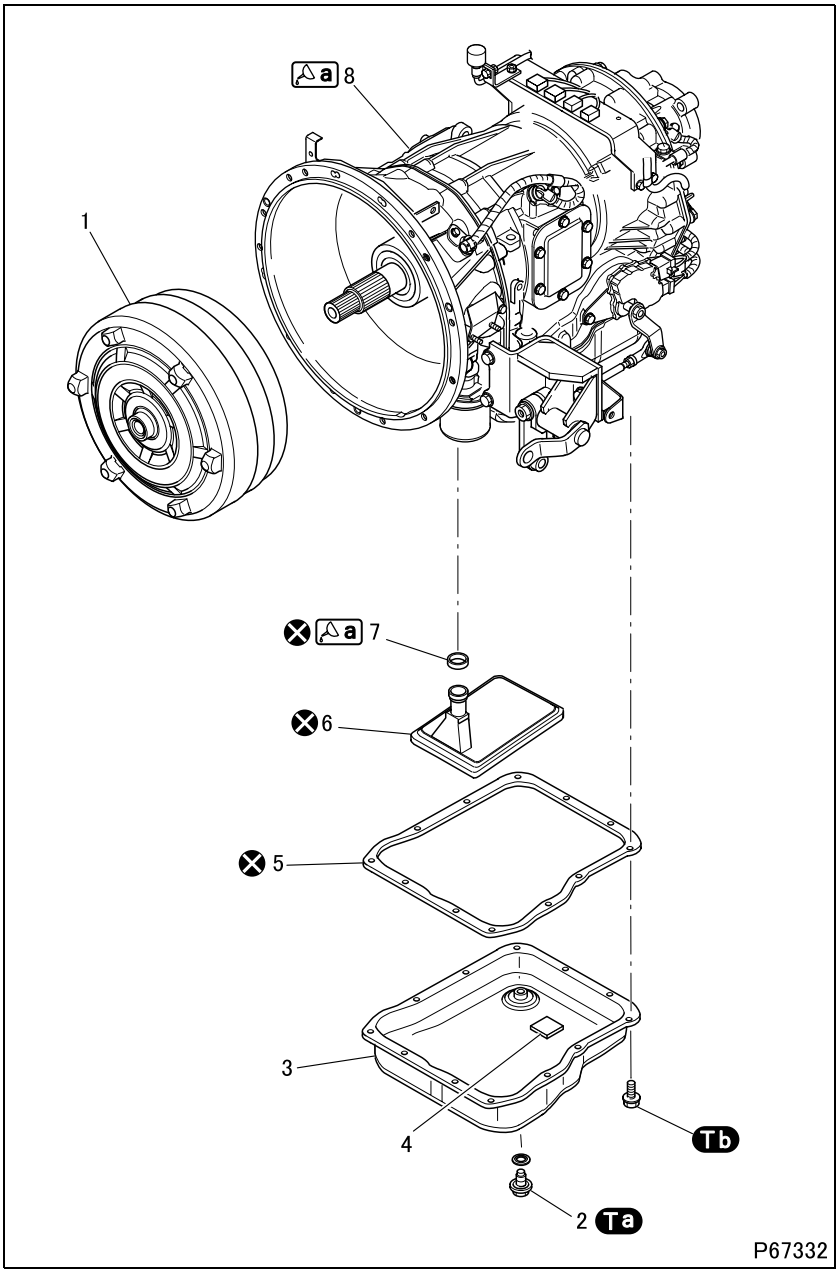

● **Disassembly sequence**

1 Torque converter
2 Drain plug
3 Oil pan
4 Magnet
5 Gasket
6 Suction filter
7 Seal ring
8 Automatic transmission

⊗: Non-reusable parts

- Check automatic transmission fluid for discoloration or contamination. Check for leakage of automatic transmission fluid and for metal in the oil pan.

● **Assembly sequence**

Follow the disassemble sequence in reverse.

Tightening torque (Unit: N·m {ft.lbs, kgf·m})

Mark	Parts to be tightened	Tightening torque	Remarks
Ta	Drain plug	30 to 40 {22 to 30, 3.1 to 4.1}	–
Tb	Bolt (oil pan mounting)	24 to 29 {17 to 22, 2.4 to 3.0}	–

Lubricant and/or sealant

Mark	Points of application	Specified lubricant and/or sealant	Quantity
a	Seal ring	DEXRON III	As required
	Front oil seal (automatic transmission)		

◆Cleaning procedure◆

■ **Cleaning: Drain plug, oil pan and magnet**

- Wash the removed drain plug, oil pan and magnet with cleaning solvent.

◆Installation procedure◆

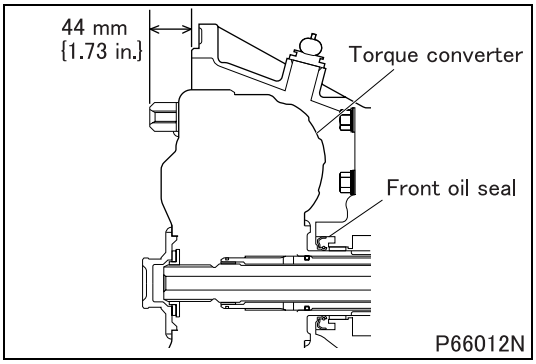

■ **Installation: Torque converter**

- Apply automatic transmission fluid to the front oil seal and install the torque converter.

CAUTION ⚠

- **When inserting the torque converter, do not damage the front oil seal.**

- Measure the depth of the torque converter from its surface to the mounting surface of the case to make sure that the torque converter is installed into position.

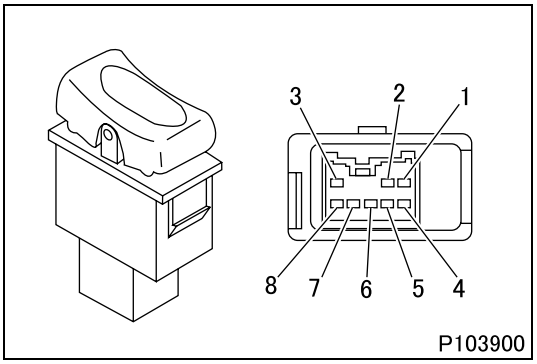

#019 Inspection of power mode switch

Switch position	Terminals with continuity	Illumination activated	Night illumination
ON	7 – 8	(+) 4 – 1 (–)	–
OFF	2 – 7	–	

- If any abnormality is found, replace the power mode switch.

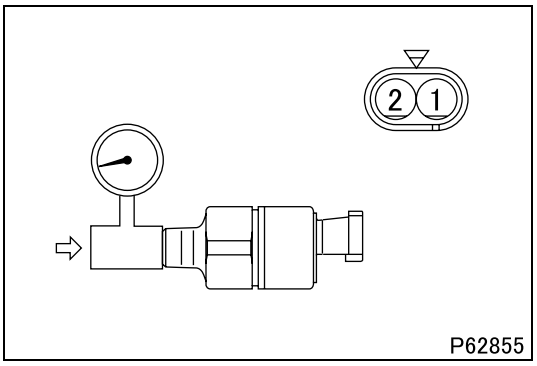

#042 Inspection of stop lamp switch

- Perform the following inspection. If any abnormality is found, replace the switch.

(1) Inspection by applying no air pressure

- Make sure that there is no continuity between terminals 1 and 2.

(2) Inspection by applying air pressure

- Apply air pressure to the switch gradually from 0 kPa {0 psi, 0 kgf/cm^2}.
- Measure the air pressure when continuity is established across terminals 1 and 2, and make sure that the air pressure is within the standard value.

Standard value (operating pressure)	29 ± 9.8 kPa {4.2 ± 1.4 psi, 0.3 ± 0.1 kgf/cm^2}

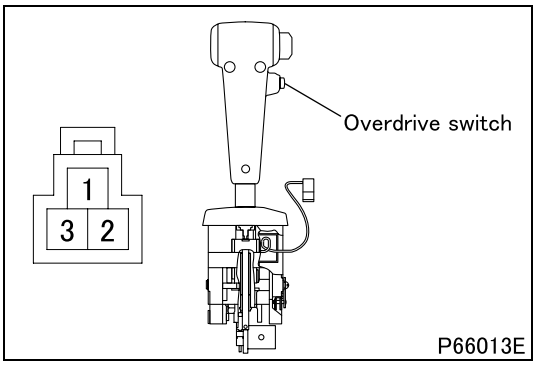

#150 Inspection of overdrive switch

Switch position	Terminals with continuity
OFF (overdrive enabled)	2 – 3
ON (overdrive disabled)	–

- If any abnormality is found, replace the range selector lever.

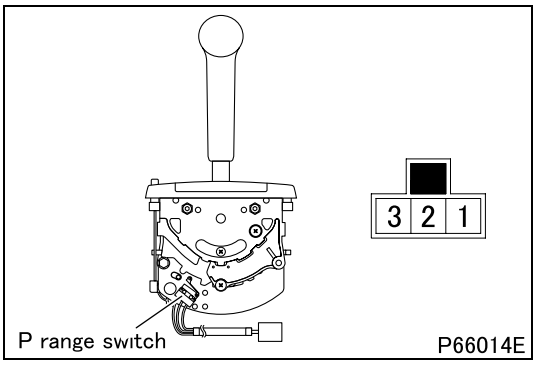

#151 Inspection of P range switch

Switch position	Terminals with continuity
P range position	1 – 3
Except P range position	2 – 3

- If any abnormality is found, replace the range selector lever.

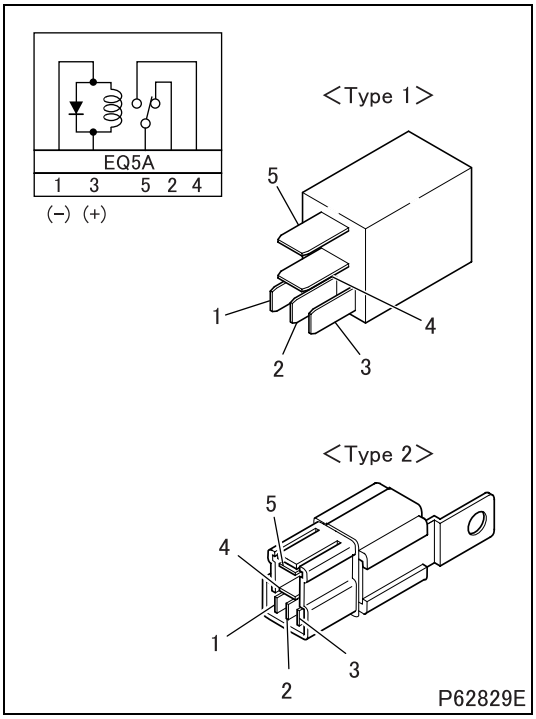

#201 Inspection of relay (normally open type, 5-pin)

- Perform a continuity check and an operation check. If there is any abnormality, replace the relay.

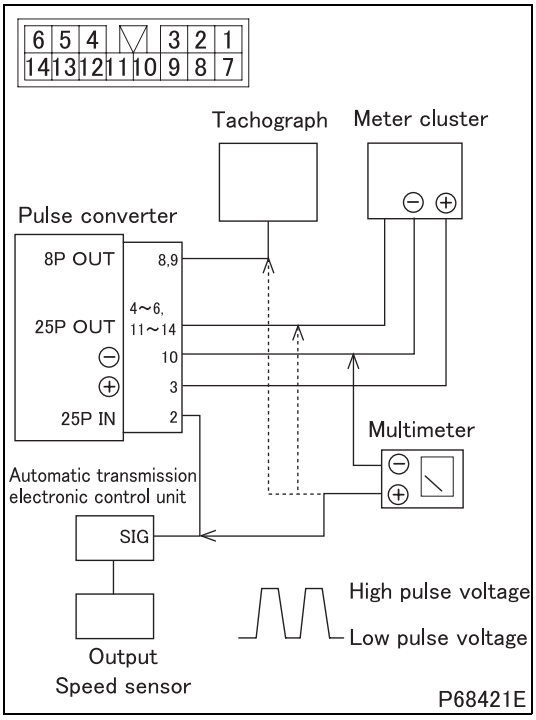

#352 Inspection of pulse converter

- Check the pulse converter with the automatic transmission electronic control unit installed in the vehicle.
- With the starter switch in the ON position, slowly turn the wheels by means of a chassis dynamo or any other appropriate means.
- Measure the maximum voltage (high pulse voltage) and minimum voltage (low pulse voltage) values of the voltage between each of input and output terminals and terminal 10 of the pulse converter.

(1) Output measurement

Standard value	8 pulse output (between terminals 8, 9 and 10)	Low pulse voltage	1.5 V or lower
		High pulse voltage	{Input voltage (battery) –0.5 V} or higher
	25 pulse output (between terminals 4 to 6, 11 to 14 and 10)	Low pulse voltage	0.5 V or lower
		High pulse voltage	$8^{+1.5}_{-1.0}$ V

- If measurement deviates from the standard value, conduct input measurement.

(2) Input measurement

Standard value 25 pulse input (between terminals 2 and 10)	Low pulse voltage	0.5 V or lower
	High pulse voltage	8 ± 1 V

- If measurement meets the standard value, signals from the automatic transmission electronic control unit should be normal. Accordingly, replace the pulse converter.
- If measurement deviates from the standard value, check the automatic transmission.

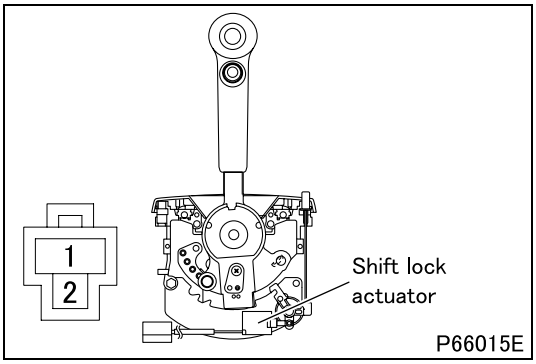

#535 Inspection of shift lock actuator

- This inspection should be performed after the P range switch inspection.
- Shift the range selector lever in P range.
- Check that the pushbutton cannot be pressed (the lever cannot be shifted from P range to other ranges).
- Starting from 0 V, gradually apply direct current voltage between the terminals 1 and 2.
- Measure the voltage when it becomes possible to press in the pushbutton and shift from P range to other ranges.

Standard value (operating voltage)	9 to 16 V

- If any abnormality is found, replace the range selector lever.

M E M O

INSTALLED LOCATIONS OF PARTS

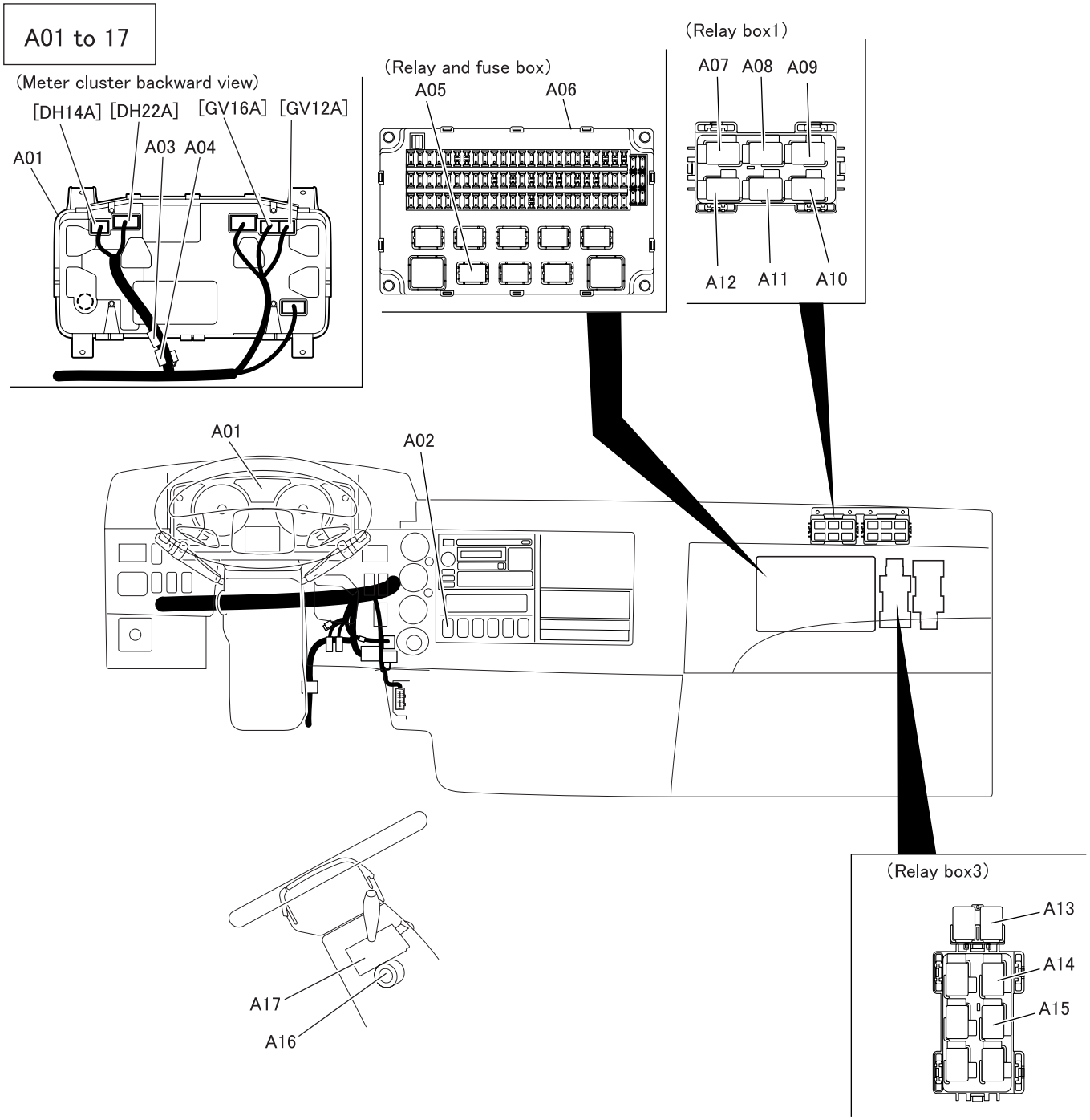

A01 Meter cluster
A02 Power mode switch
A03 Joint connector (J/C-2)
A04 Joint connector (J/C-6)
A05 Stop lamp relay
A06 Relay and fuse box
A07 P shift lock relay
A08 A/T N/P signal reversing relay
A09 A/T exhaust brake cut relay
A10 ABS indicator relay
A11 A/T ABS activation signal relay
A12 A/T back lamp relay
A13 Neutral start relay
A14 Safety relay
A15 ABS exhaust brake cut relay
A16 Starter switch
A17 Combination switch

A/T : Automatic transmission
N/P : Neutral/Parking
ABS : Anti-lock brake system

Indicate by connector type [ ].

L02642

A20 to 23

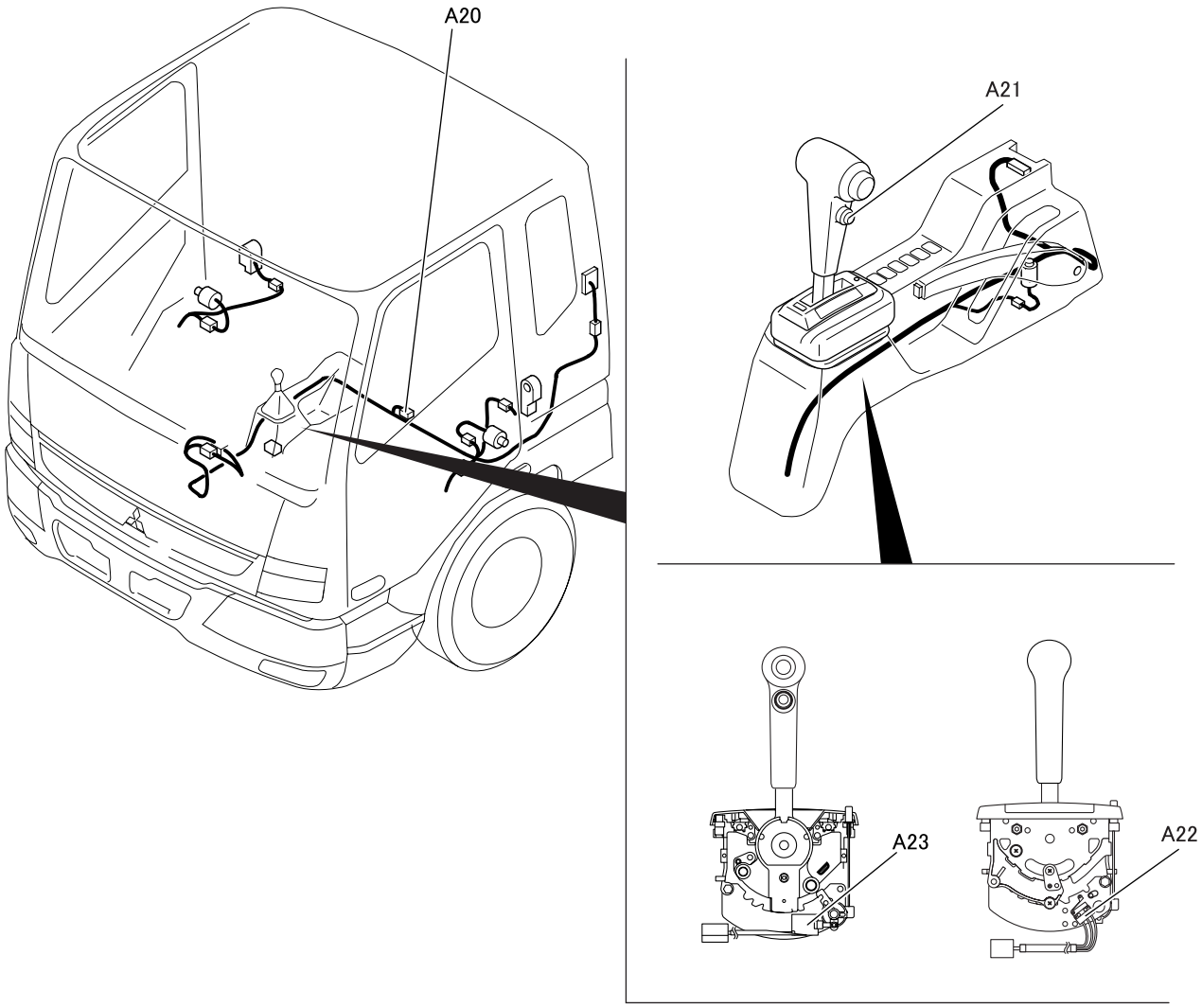

A20 Diode unit
A21 Over drive switch
A22 P range switch
A23 Shift lock actuator

L02643

INSTALLED LOCATIONS OF PARTS

A25 to 31

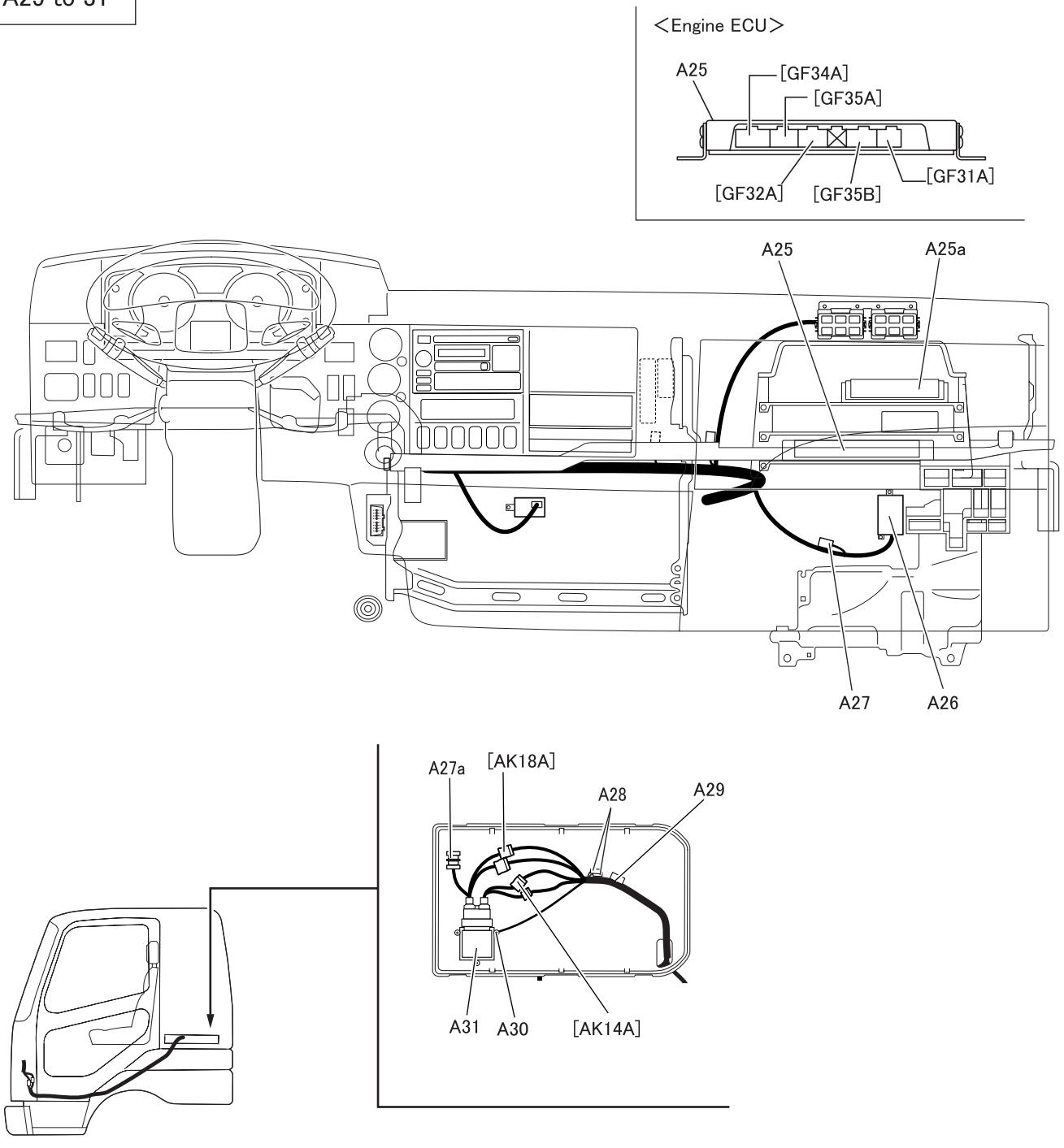

A25 Engine ECU
A25a ABS ECU
A26 Pulse converter
A27 Diode unit
A27a Diagnostic connector
(For allison exclusive diagnosis tool)
A28 CAN resistor
Diode unit
A29 Joint connector (J/C)
A30 Ground
A31 A/T ECU

ABS : Anti-lock brake system
A/T : Automatic transmission
ECU : Electronic control unit

Indicate by connector type [ ].

L02644

A35 to 40

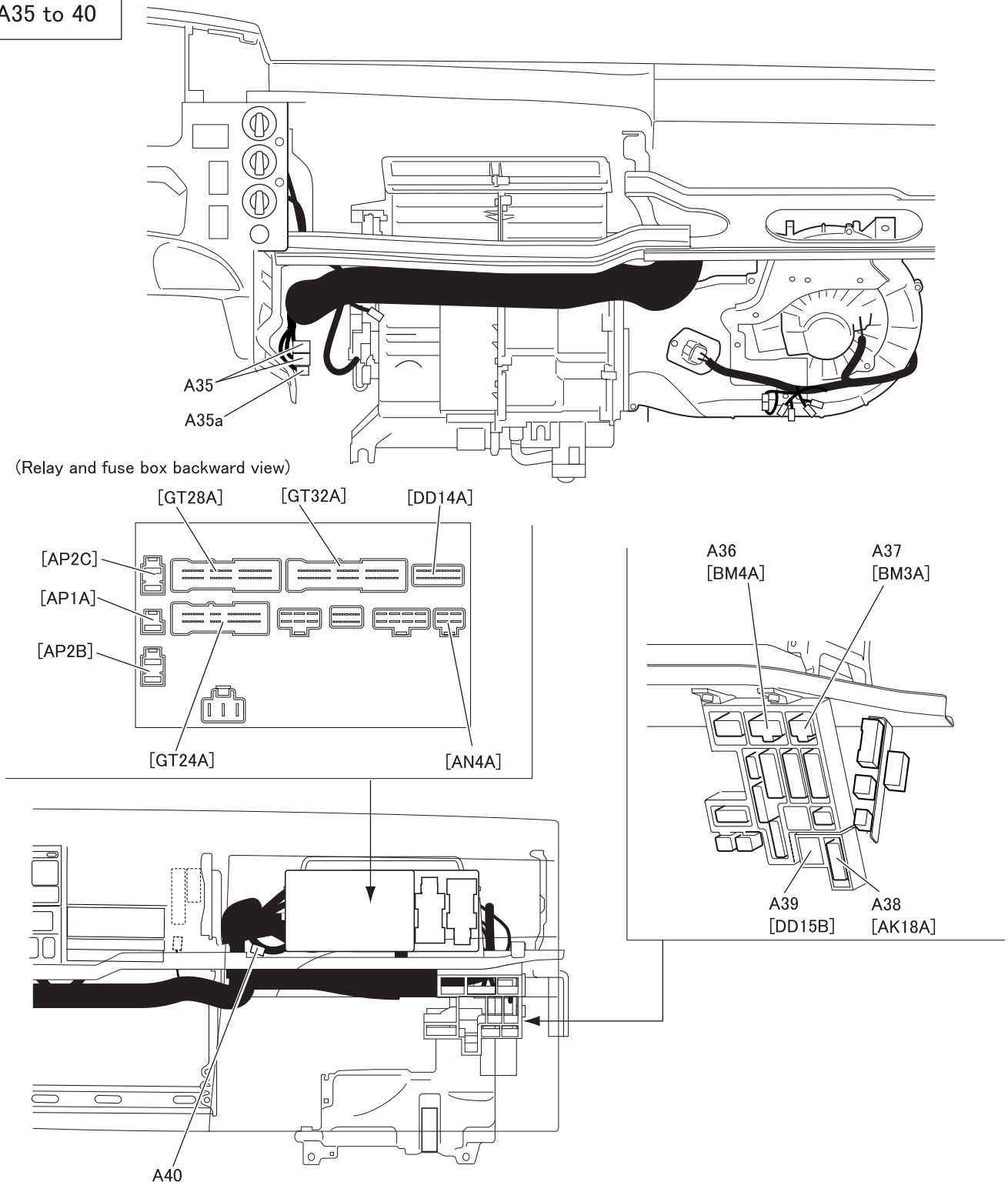

A35	Connection of cab harness and A/T harness
A35a	Connection of cab harness and center floor harness
A36–37	Connection of cab harness and chassis harness
A38–39	Connection of A/T harness and chassis harness
A40	Joint connector (J/C–1, 3, 4)

A/T : Automatic transmission

L02645

B01 to 04

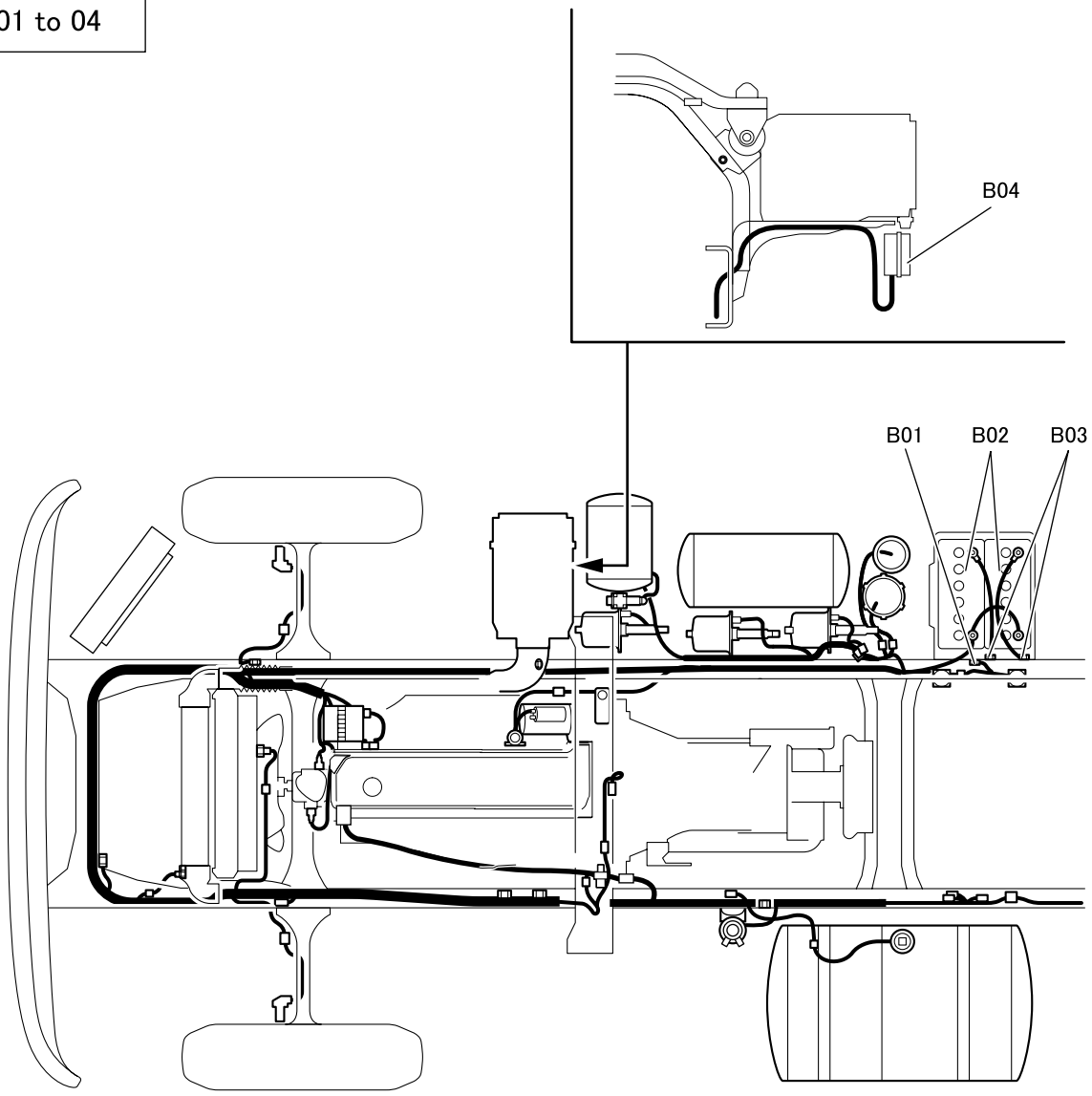

B01 Ground
B02 Battery
B03 Ground
B04 High-crrent fuse box

L02646

C01 to 04

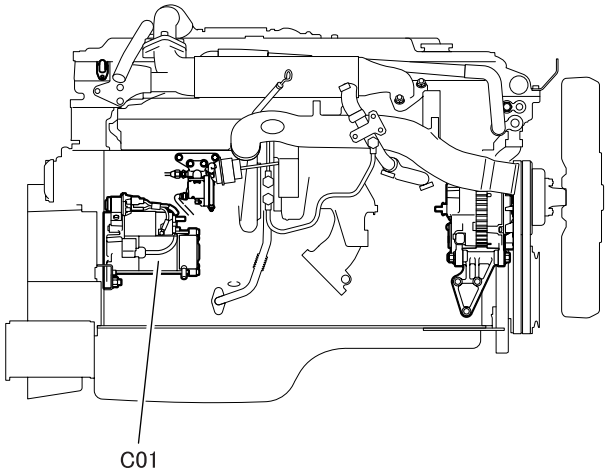

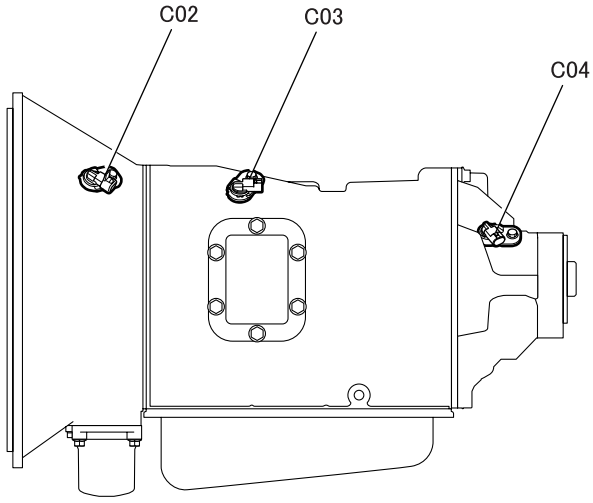

C01 Starter
C02 Input speed sensor
C03 Turbine speed sensor
C04 Output speed sensor

ELECTRICAL CIRCUIT DIAGRAM

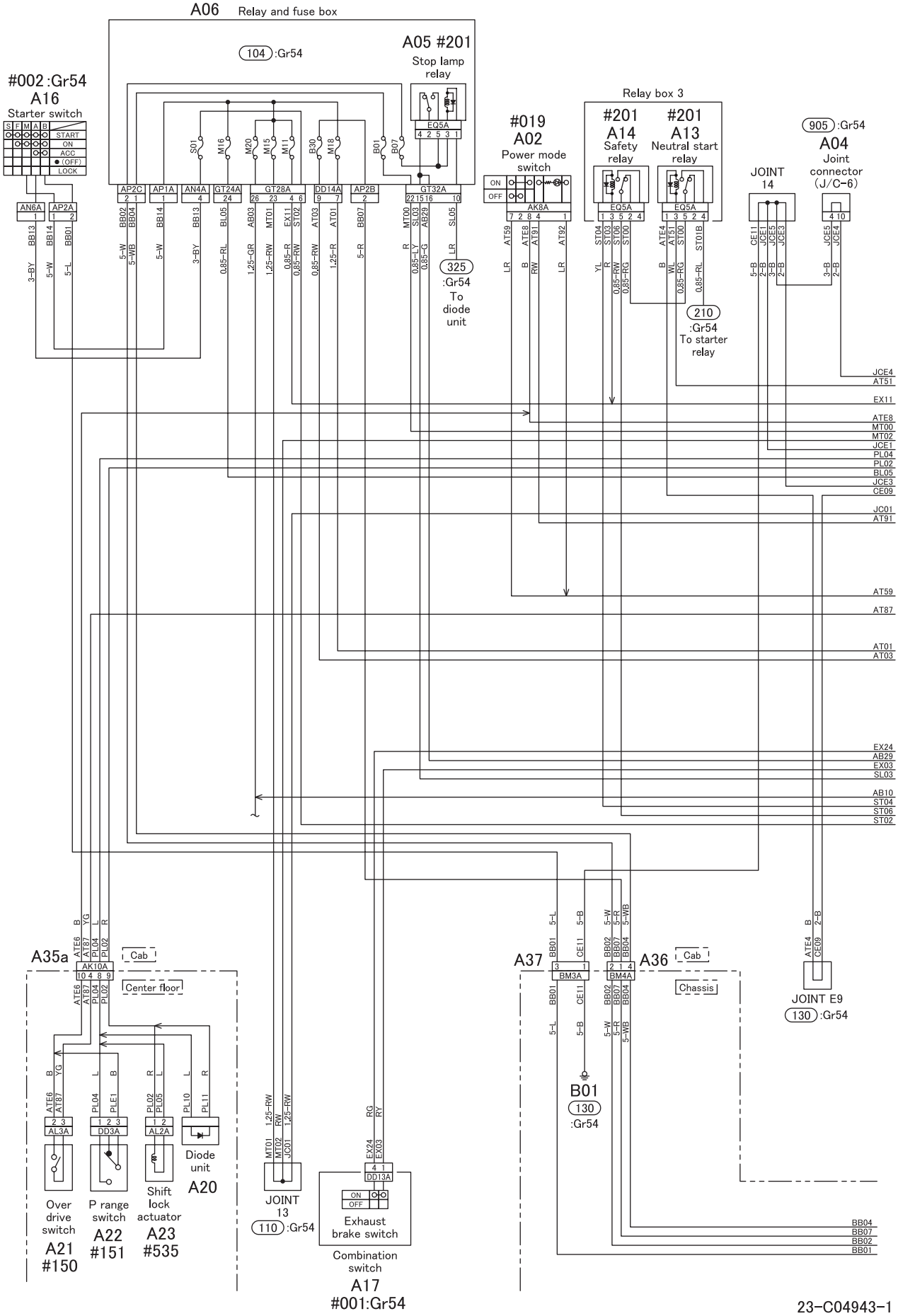

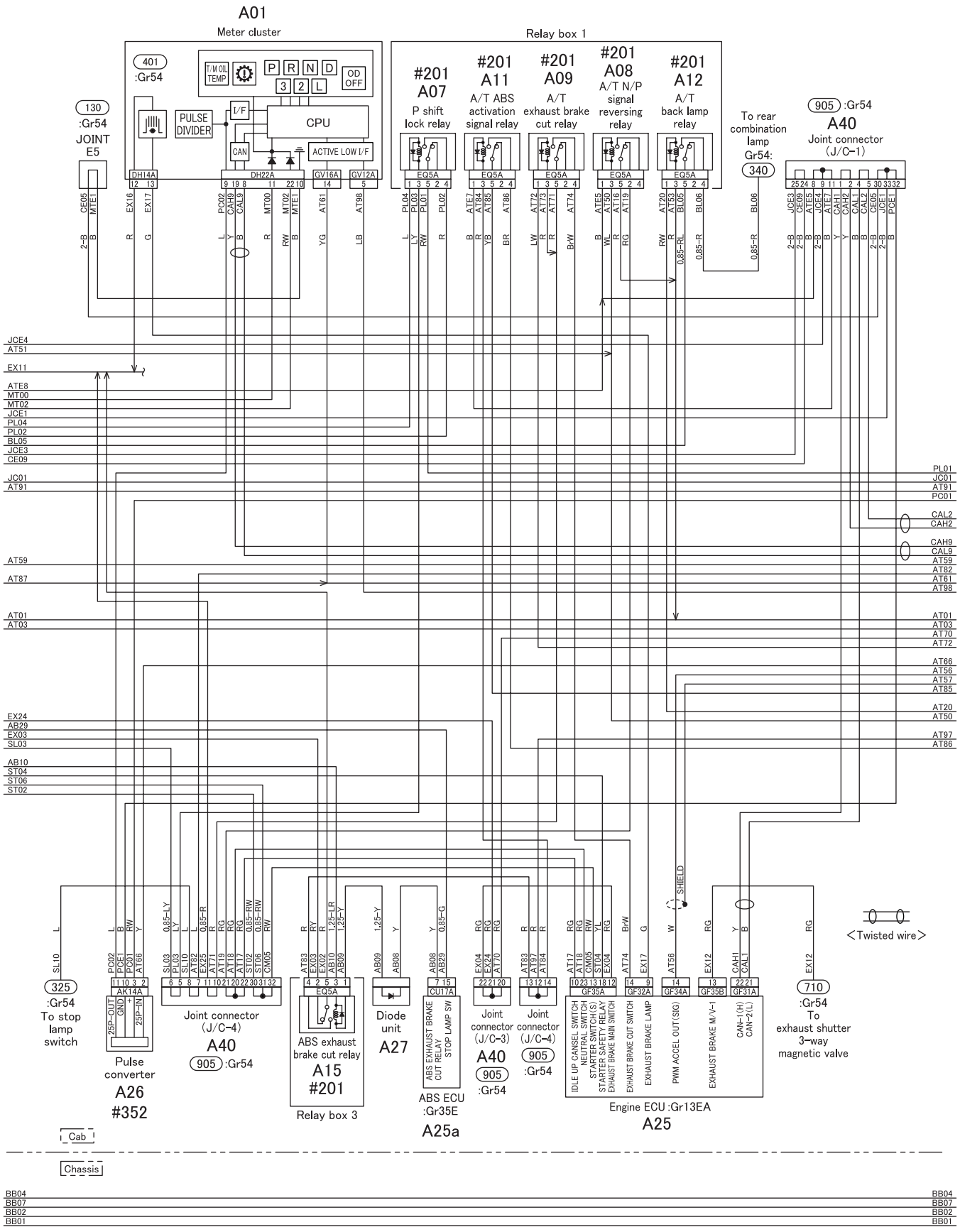
A01
Meter cluster
401
:Gr54
T/M OIL TEMP
P R N D
3 2 L
OD OFF
I/F
PULSE DIVIDER
CPU
CAN
ACTIVE LOW I/F
DH14A
DH22A
GV16A
GV12A
Relay box 1
#201 A07
P shift lock relay
#201 A11
A/T ABS activation signal relay
#201 A09
A/T exhaust brake cut relay
#201 A08
A/T N/P signal reversing relay
#201 A12
A/T back lamp relay
EQ5A
130
:Gr54
JOINT E5
To rear combination lamp Gr54:
340
905 :Gr54
A40
Joint connector (J/C-1)
JCE4
AT51
EX11
ATE8
MT00
MT02
JCE1
PL04
PL02
BL05
JCE3
CE09
JC01
AT91
AT59
AT87
AT01
AT03
EX24
AB29
EX03
SL03
AB10
ST04
ST06
ST02
PL01
PC01
CAL2
CAH2
CAH9
CAL9
AT82
AT61
AT98
AT70
AT72
AT66
AT56
AT57
AT85
AT20
AT50
AT97
AT86
SHIELD
<Twisted wire>
325
:Gr54
To stop lamp switch
Pulse converter
A26
#352
Joint connector (J/C-4)
A40
905 :Gr54
ABS exhaust brake cut relay
A15
#201
Relay box 3
Diode unit
A27
ABS ECU :Gr35E
A25a
Joint connector (J/C-3)
A40
905 :Gr54
Joint connector (J/C-4)
905 :Gr54
IDLE UP CANSEL SWITCH
NEUTRAL SWITCH
STARTER SWITCH(S)
STARTER SAFETY RELAY
EXHAUST BRAKE MAIN SWITCH
EXHAUST BRAKE CUT SWITCH
EXHAUST BRAKE LAMP
PWM ACCEL OUT(SIG)
EXHAUST BRAKE M/V-1
CAN-1(H)
CAN-2(L)
Engine ECU :Gr13EA
A25
710
:Gr54
To exhaust shutter 3-way magnetic valve
Cab
Chassis
BB04
BB07
BB02
BB01

ELECTRICAL CIRCUIT DIAGRAM

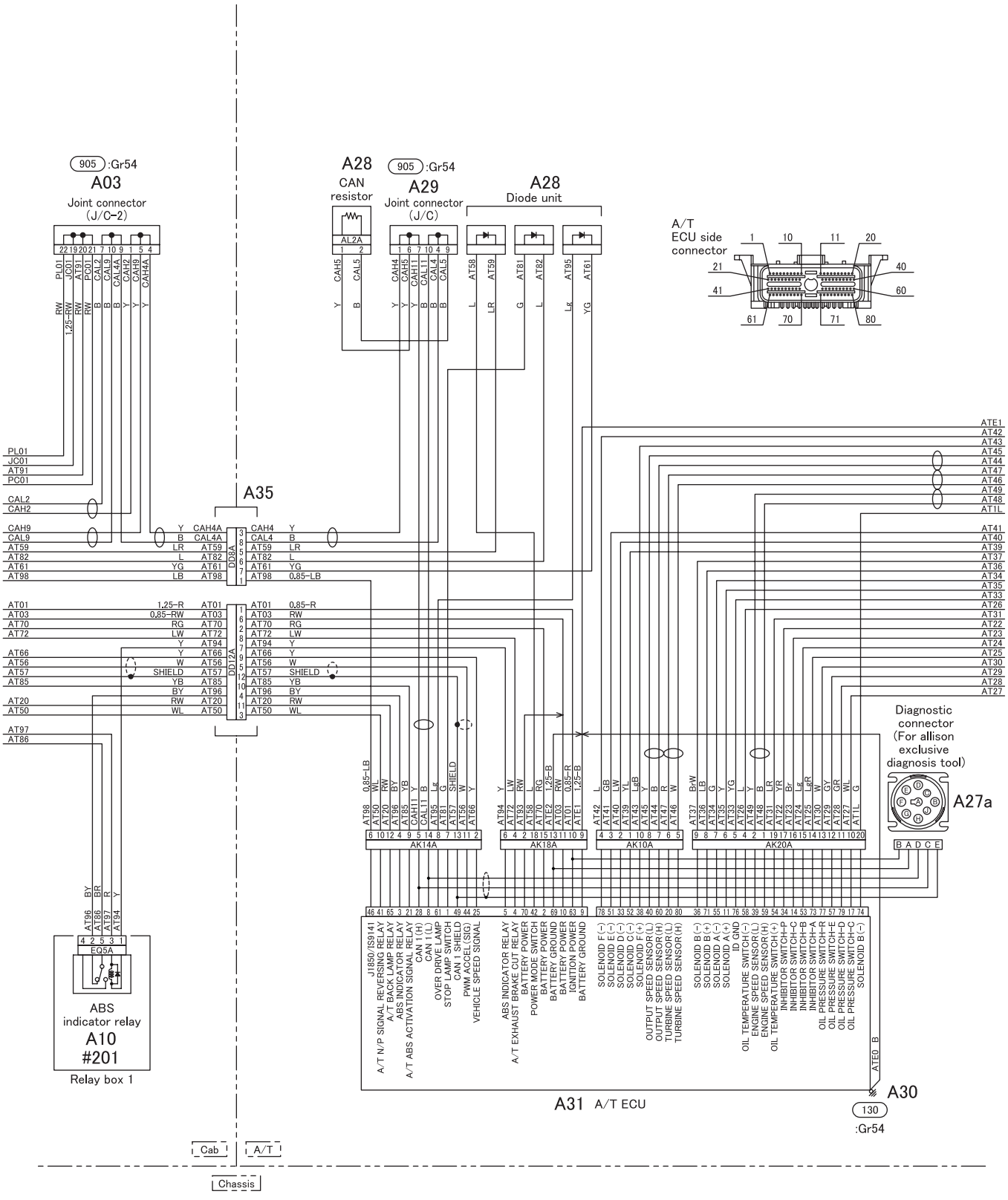

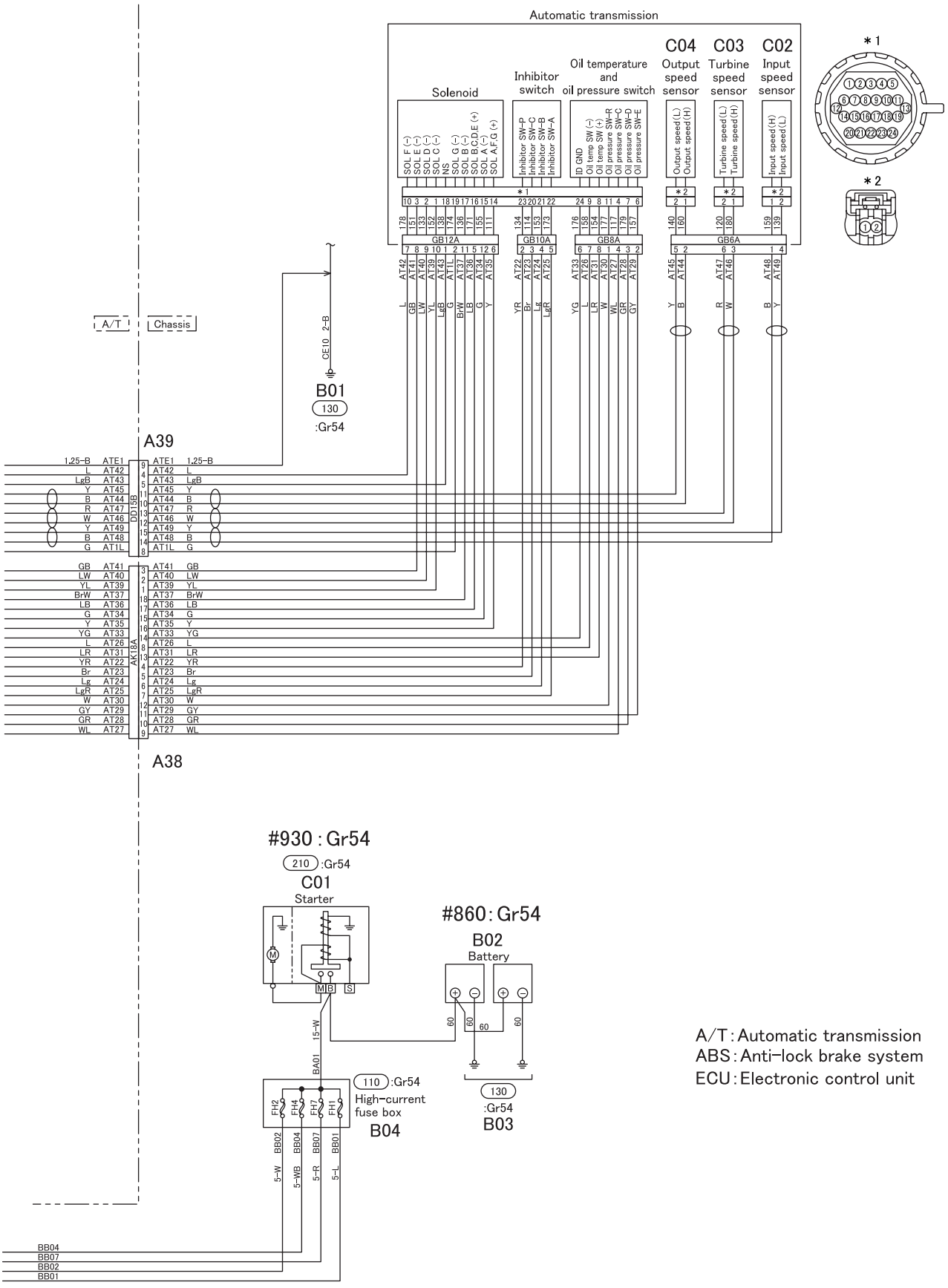

A/T : Automatic transmission
ABS : Anti-lock brake system
ECU : Electronic control unit

Group 23B

Automatic Transmission <M100A6 (Allison 3000RDS)>

Table of Contents

Back

Home

MITSUBISHI FUSO TRUCK OF AMERICA, Inc.

Pub.No.PWME0806-23B

INDEX

SPECIFICATIONS 23B-2

STRUCTURE AND OPERATION

1. **Automatic Transmission 23B-4**
2. **Automatic Transmission Control System 23B-5**
3. **Oil Cooler System 23B-6**
4. **Electronic Control Unit Connection Diagram 23B-8**

TROUBLESHOOTING

1. **Reading/Clearing of Diagnosis Codes 23B-10**
2. **List of Diagnosis Codes 23B-11**

ON-VEHICLE INSPECTION AND ADJUSTMENT

1. **Inspection of Automatic Transmission Oil Leakage 23B-14**
2. **Check for Looseness in Automatic Transmission Mounting Bolts 23B-14**
3. **Inspection of Play and Looseness in Companion Flange 23B-15**
4. **Inspection of Automatic Transmission Cooling System 23B-15**
5. **Inspection of Automatic Transmission Fluid 23B-16**
6. **Replacement of Automatic Transmission Fluid 23B-18**
7. **Level Check of Automatic Transmission Fluid 23B-20**
8. **Replacement of Oil Filter 23B-21**
9. **Stall Test 23B-22**
10. **Line Pressure Test 23B-23**
11. **Road Test 23B-26**

OIL COOLER 23B-28

INSPECTION OF ELECTRICAL EQUIPMENT 23B-32

INSTALLED LOCATIONS OF PARTS 23B-34

ELECTRICAL CIRCUIT DIAGRAM 23B-40

If the automatic transmission needs to be repaired due to internal abnormality, contact Allison Service Station for advice. The contact information is described in the Operator's Manual or on the following website.
Allison Service Station URL http://www.allisontransmission.com

SPECIFICATIONS

Item			Specification
Transmission type			M100A6
Manufacturer			Allison
Torque converter	Model type		TC415
	Type		3-element, 1-stage, 2-phase
	Stall torque ratio		2.35
Transmission	Model type		3000RDS
	Type		Planetary gear type 6 forward speeds and 1 reverse speed
	Gear ratio	1st	3.487
		2nd	1.864
		3rd	1.409
		4th	1.000
		5th	0.750
		6th	0.652
		Rev	5.027
Range selector pattern			R – N – D – 5 – 4 – 3 – 2 – 1 Engine can be started in N position only.
Automatic transmission fluid	Specified lubricant and/or sealant		DEXRON III
	Fluid quantity	Main unit dm^3 {L}	27 {27}
		Overall system dm^3 {L}	31 {31}
Mass of automatic transmission kg {lb}			290 {640}

M E M O

1. Automatic Transmission

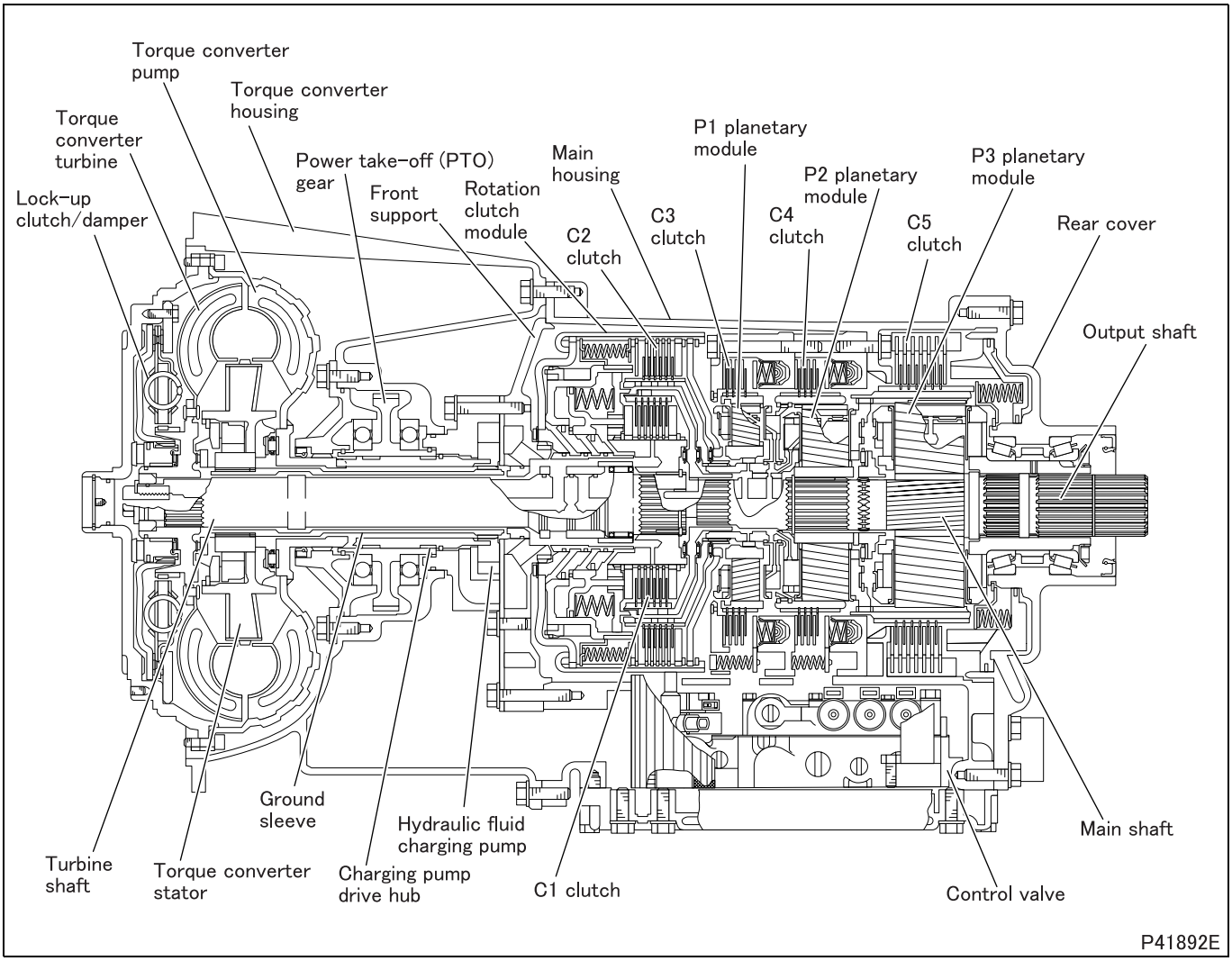

2. Automatic Transmission Control System

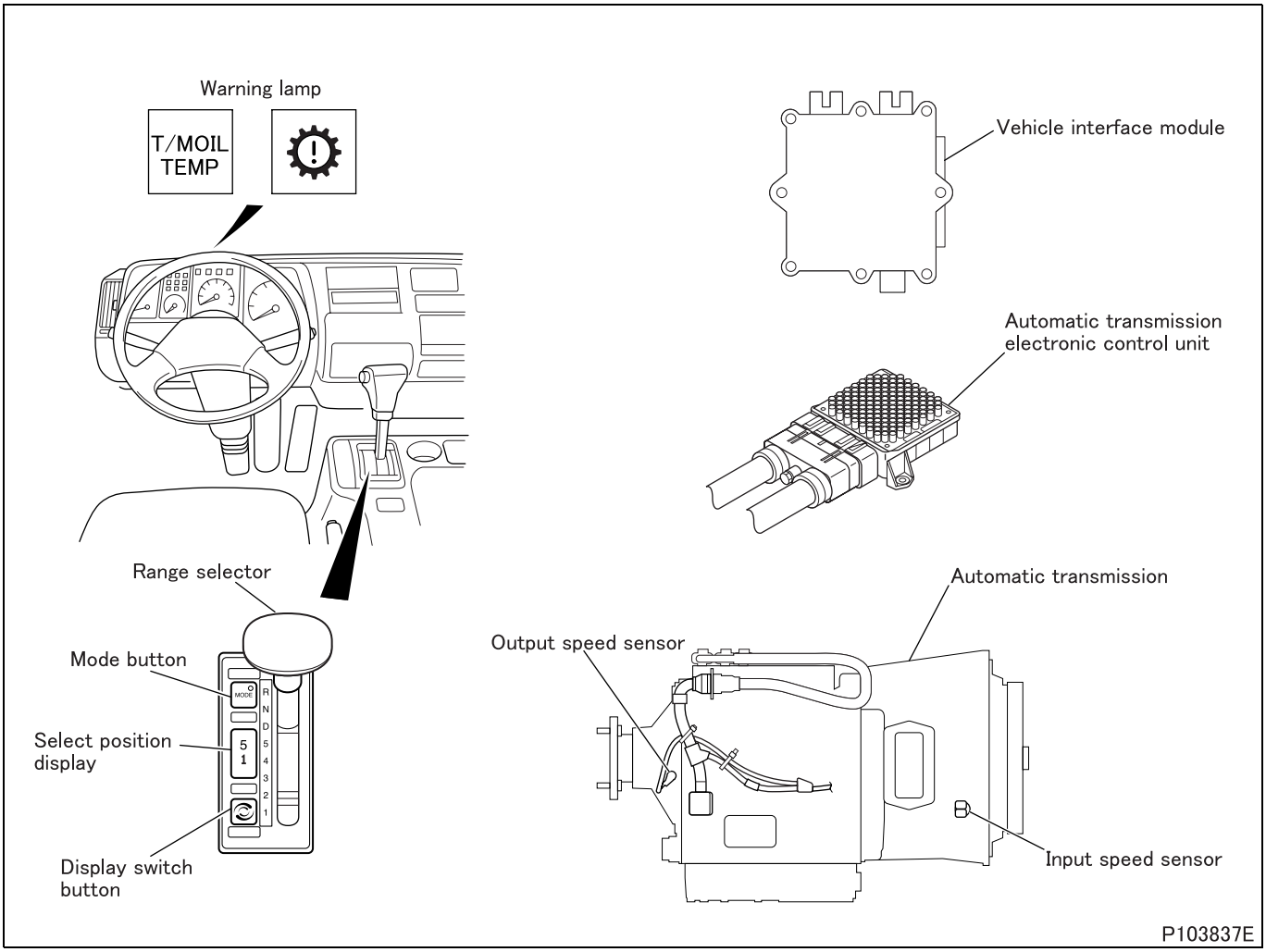

- Electronic control (ATEC: Allison Transmission Electronic Control) system is composed of vehicle interface module, automatic transmission electronic control unit, range selector, throttle position sensor, electronic hydraulic valve body, and harnesses connecting these units.
- The automatic transmission electronic control unit receives electric signals, which are sent by each sensor and shift selector, processes them, transmits the signals to an appropriate solenoid, and thereby controls the transmission.

3. Oil Cooler System

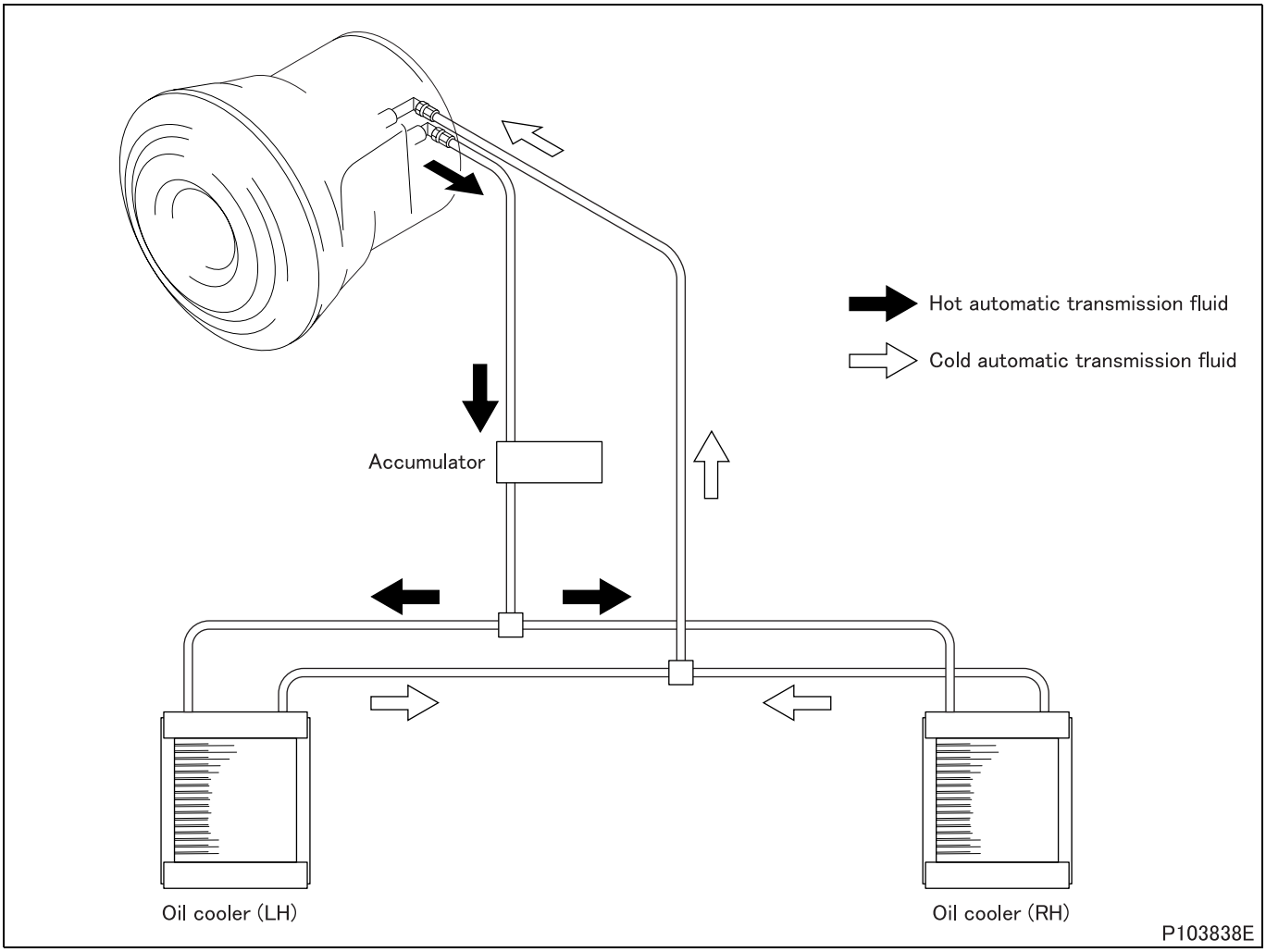

- As the automatic transmission operates, the automatic transmission fluid becomes high temperature. Then the high temperature fluid is cooled down by two oil coolers and returned to recirculate in the automatic transmission again.
- The automatic transmission fluid also becomes high pressure due to the operation of the automatic transmission. To regulate the fluid pressure to keep the oil line from overloading, an accumulator is provided.

M E M O

4. Electronic Control Unit Connection Diagram

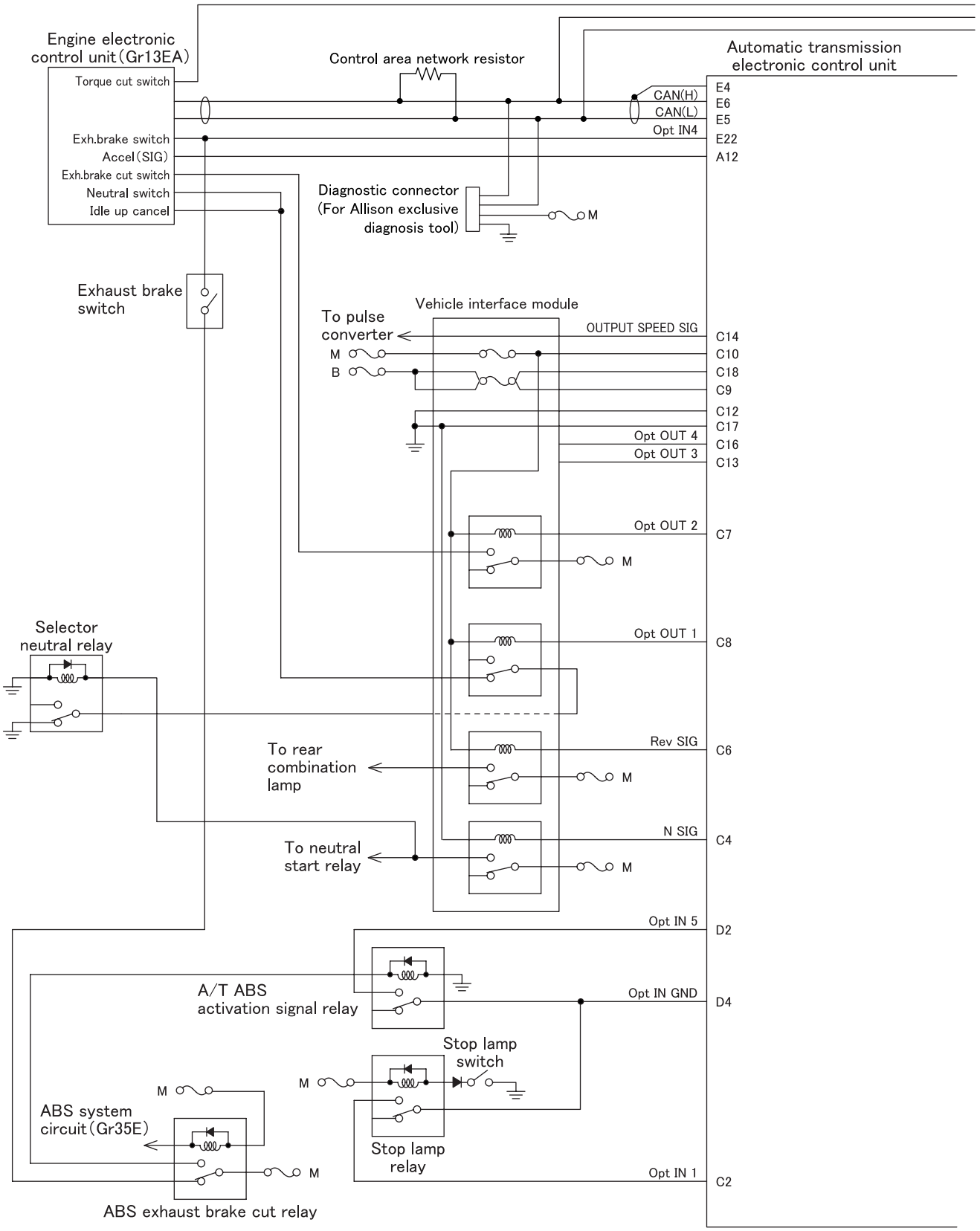

B : Direct battery power supply
M : Starter switch M tarminal power supply
ABS : Anti-lock brake system
A/T : Automatic transmission

P104636E-1

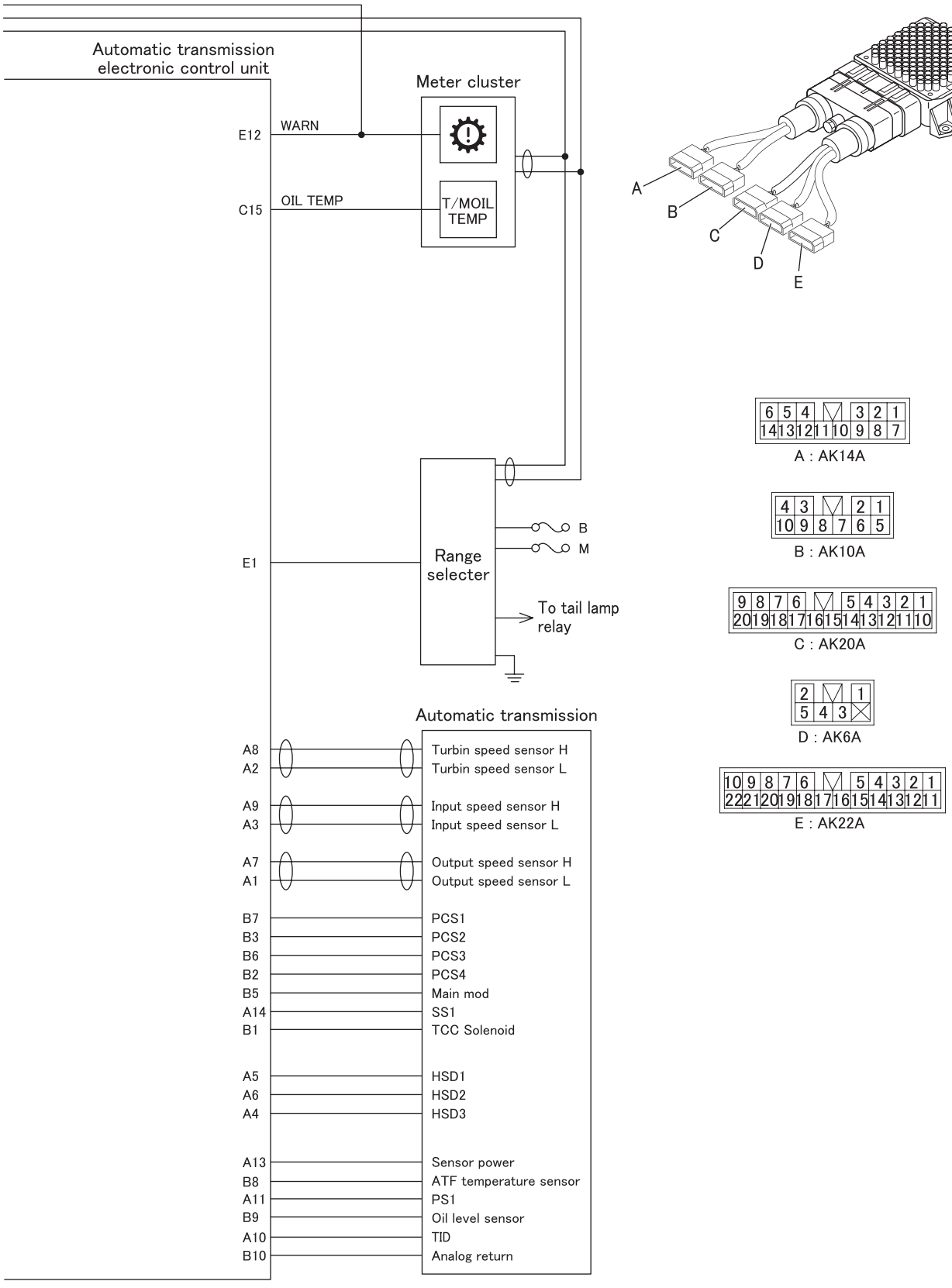

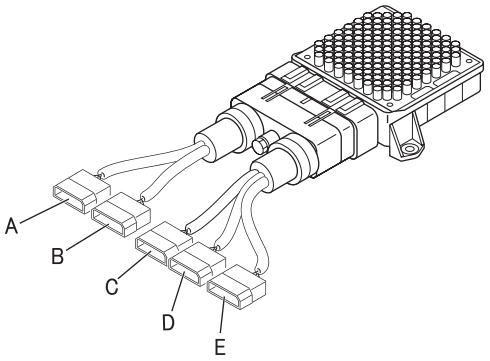

A : AK14A

B : AK10A

C : AK20A

D : AK6A

E : AK22A

P104636E-2

1. Reading/Clearing of Diagnosis Codes

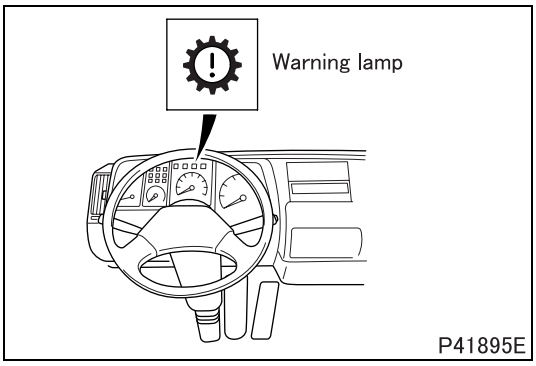

- This automatic transmission is equipped with trouble self-diagnosis function. When detecting abnormality, the function displays occurrence of troubles on warning lamp, as well as memorizes the diagnosis codes in the memory.
- Diagnosis codes are memorized to the maximum five.

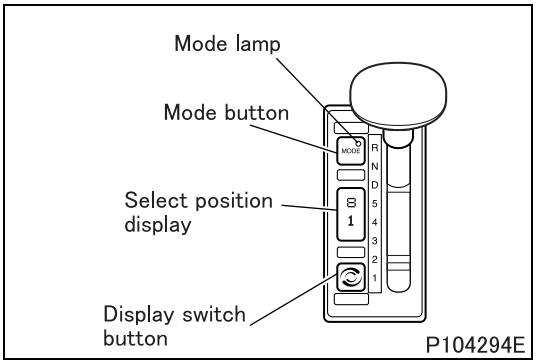

1.1 Start of trouble mode (reading of diagnosis codes)

- Park the vehicle at a safe place and apply parking brake.
- Push display switch button of range selector twice.
- Diagnosis codes are indicated in select position display. If “oL” is indicated, push the display switch button again.
- Record the diagnosis codes that are indicated.
  For instance, if indicated in order of “d1”, “P”, “07”, and “22”, it shows that P0722 are memorized in the 1st memory. When nothing is recorded, “--” “--” is repeatedly displayed in sequence.
- There are five memories that memorize the code No. When pushing mode button, the 2nd memory code is displayed following “d2”.
- Whenever pushing mode button, “d3”, “d4”, and “d5” are displayed in sequence, and finally “d1” is indicated back.

1.2 Clearing of diagnosis trouble code No.

- Confirm that the range selector lever is in N range.
- After the repair is completed and mode button is pushed for about 10 seconds, the current and past diagnosis codes are cleared.

NOTE

- **The code number is automatically cleared after the trouble is repaired.**

1.3 Release of diagnosis mode (returning to normal operation mode)

- There are the following two methods to return it to normal operation mode.
- Push the display switch button of range selector.
- Shift the lever from the current range to another range (Reverse, Neutral or Drive).

2. List of Diagnosis Codes

- If a code not in this list is found, ask an Allison service shop for repair.
- If the trouble cannot be solved or if the automatic transmission proper is faulty, ask an Allison service station for repair.
- Be sure to turn off the starter switch before disconnecting the connector from the automatic transmission.

Code	Fault (outline)	Warning	Contents of trouble and points to be inspected
P0218	High ATF temperature	–	Faulty fluid temperature sensor Faulty automatic transmission cooling system (oil cooler)
P0602	No program in electronic control unit	O	Ask an Allison service shop for repair.
P0610	Error related to optional parts	O	Ask an Allison service shop for repair.
P0613	Faulty electronic control unit	–	Ask an Allison service shop for repair.
P0614	Torque control data in engine electronic control unit and automatic transmission electronic control unit unmatched (engine control request disabled)	O	Ask an Allison service shop for repair.
P0634	High electronic control unit internal temperature	O	Check if any heat source exists near the electronic control unit.
P0658 P0659	Faulty power voltage to automatic transmission proper (HSD1)	O	Faulty harness between electronic control unit and automatic transmission (power supply line from electronic control unit to automatic transmission)
P0701	Faulty automatic transmission proper	–	Low ATF level Faulty automatic transmission proper
P0702	Faulty TID (transmission identification) harness	O	Broken TID harness
P0703	Faulty stop lamp signal	–	Faulty harness from electronic control unit to stop lamp relay and stop lamp switch. Faulty stop lamp relay or stop lamp switch
P0708	Faulty range selector	O	Faulty harness between electronic control unit and range selector Faulty range selector
P070C P070D	Faulty oil level sensor in automatic transmission proper	–	Inspect ATF level. Faulty harness between electronic control unit and oil level sensor Faulty oil level sensor
P0711 P0712 P0713	Faulty fluid temperature sensor in automatic transmission proper	O	Faulty harness between electronic control unit and fluid temperature sensor Faulty fluid temperature sensor
P0716 P0717	Faulty turbine speed sensor in automatic transmission proper	O	Faulty harness between electronic control unit and turbine speed sensor Faulty turbine speed sensor
P0719	Faulty anti-lock brake system exhaust brake activation signal	–	Faulty harness from electronic control unit to automatic transmission anti-lock brake system activation signal relay and anti-lock brake system exhaust brake cut relay Faulty relay
P071A	Faulty RELS function (to reduce engine load when stopping)	O	Faulty electronic control unit
P071D	Faulty range changeover prohibition function (general purpose)	O	Faulty electronic control unit
P0721 P0722	Faulty output speed sensor	O	Faulty harness between electronic control unit and output speed sensor Faulty output speed sensor
P0726 P0727	Faulty input speed sensor	–	Faulty harness between electronic control unit and input speed sensor Faulty input speed sensor

Code	Fault (outline)	Warning	Contents of trouble and points to be inspected
P0729	Gear ratio inconsistent (6th)	O	Check ATF level. Faulty input speed sensor Faulty turbine speed sensor Faulty output speed sensor Faulty automatic transmission proper
P0731	Gear ratio inconsistent (1st)	O	
P0732	Gear ratio inconsistent (2nd)	O	
P0733	Gear ratio inconsistent (3rd)	O	
P0734	Gear ratio inconsistent (4th)	O	
P0735	Gear ratio inconsistent (5th)	O	
P0736	Gear ratio inconsistent (Rev)	O	
P0741	Torque converter binds in OFF condition (lock-up control disabled)	O	Faulty TCC solenoid in automatic transmission proper Faulty torque converter
P0776	Solenoid (PCS2) in automatic transmission proper binds in OFF position	O	Faulty harness between electronic control unit and solenoid Faulty turbine speed sensor Faulty output speed sensor Faulty automatic transmission proper
P0777	Solenoid (PCS2) in automatic transmission proper binds in ON position	O	
P0796	Solenoid (PCS3) in automatic transmission proper binds in OFF position	O	Faulty harness between electronic control unit and solenoid Faulty turbine speed sensor Faulty output speed sensor Faulty automatic transmission proper
P0797	Solenoid (PCS3) in automatic transmission proper binds in ON position	O	
P0842 P0843	Faulty fluid pressure switch (PS1) in automatic transmission proper	O	Faulty harness between electronic control unit and pressure switch Faulty automatic transmission proper
P0880 P0881 P0882 P0883	Faulty electronic control unit power voltage	– – O –	Faulty harness from electronic control unit to battery direct power source and starter switch ON power source, and harness between electronic control unit and ground Faulty battery (See Gr54.)
P0894	Abnormal slippage of clutches in automatic transmission proper	O	Check ATF level. Faulty automatic transmission proper
P0960 P0962 P0963	Broken or short circuit of main adjustment solenoid in automatic transmission proper	O	Faulty harness between electronic control unit and solenoid
P0964 P0966 P0967	Broken or short circuit of solenoid (PCS2) in automatic transmission proper	O	Faulty harness between electronic control unit and solenoid
P0968 P0970 P0971	Broken or short circuit of solenoid (PCS3) in automatic transmission proper	O	Faulty harness between electronic control unit and solenoid
P0973 P0974	Short circuit of shift solenoid in automatic transmission proper	O	Faulty harness between electronic control unit and solenoid
P063E P0122 P0123 P1891 P1892	Faulty throttle angle signal	O – – – –	Faulty harness between electronic control unit and engine electronic control unit Faulty fuel system (See Gr13EA.)

Code	Fault (outline)	Warning	Contents of trouble and points to be inspected
P063F P2184 P2185	Faulty engine coolant temperature information	–	Faulty controller area network communication system Faulty fuel system (See Gr13EA.)
P2637	Faulty SEM function (to reduce engine torque when shifting)	O	Faulty electronic control unit
P2641	Faulty LRTP function (to protect automatic transmission by controlling the engine torque using low gears when driving at low speeds)	O	Faulty electronic control unit
P2670 P2671	Faulty power voltage to automatic transmission proper (HSD2)	O	Faulty harness between electronic control unit and automatic transmission (power supply line from electronic control unit to automatic transmission)
P2685 P2686	Faulty power voltage to automatic transmission proper (HSD3)	O	Faulty harness between electronic control unit and automatic transmission (power supply line from electronic control unit to automatic transmission)
P2714	Solenoid (PCS4) in automatic transmission proper binds in OFF position	O	Faulty harness between electronic control unit and solenoid Faulty turbine speed sensor Faulty output speed sensor Faulty automatic transmission proper
P2715	Solenoid (PCS4) in automatic transmission proper binds in ON position	O	
P2718 P2720 P2721	Broken or short circuit of solenoid (PCS4) in automatic transmission proper	O	Faulty harness between electronic control unit and solenoid
P2723	Solenoid (PCS1) in automatic transmission proper binds in OFF position	O	Faulty harness between electronic control unit and solenoid Faulty turbine speed sensor Faulty output speed sensor Faulty automatic transmission proper
P2724	Solenoid (PCS1) in automatic transmission proper binds in ON position	O	
P2727 P2729 P2730	Broken or short circuit of solenoid (PCS1) in automatic transmission proper	O	Faulty harness between electronic control unit and solenoid
P2761 P2763 P2764	Broken or short circuit of TCC solenoid in automatic transmission proper	O	Faulty harness between electronic control unit and solenoid
P2793	Faulty direction information (forwarding, neutral or reversing) from range selector	O	Faulty harness between electronic control unit and range selector
U0001 U0010	Faulty controller area network communication	–	Faulty controller area network communication harness
U0100 U0115	Faulty communication to engine electronic control unit	O	Faulty controller area network communication (between automatic transmission electronic control unit and engine electronic control unit)
U0103	Faulty communication to range selector	O	Faulty controller area network communication (between automatic transmission electronic control unit to range selector)
U0304	Unmatched range selector	O	Replace with correct range selector
U0404	Faulty range selector output signal	O	Faulty range selector

ON-VEHICLE INSPECTION AND ADJUSTMENT

1. Inspection of Automatic Transmission Oil Leakage

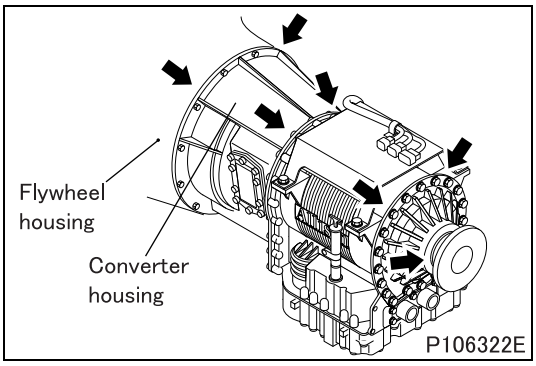

1.1 Inspection of oil leakage at each part of transmission body

- Check the oil leakage at each part of automatic transmission body in visual.
  If the oil leakage is found, replace the defective part.

1.2 Inspection of oil leakage around transmission mounting part

- Check there is not oil stain on flywheel housing and automatic transmission mounting part caused by oil leakage from engine.
- If there is the oil stain, remove the automatic transmission and clean the mounting surface of converter housing and flywheel housing using brake cleaner etc. after repairing oil leakage part. Because the oil stain may loosen the automatic transmission mounting bolts. (See “REMOVAL AND INSTALLATION OF AUTOMATIC TRANSMISSION”.)

2. Check for Looseness in Automatic Transmission Mounting Bolts

Tightening torque (Unit: N·m {ft.lbs, kgf·m})

Mark	Parts to be tightened	Tightening torque	Remarks
–	Bolt (automatic transmission mounting)	40.2 {30, 4.1}	–

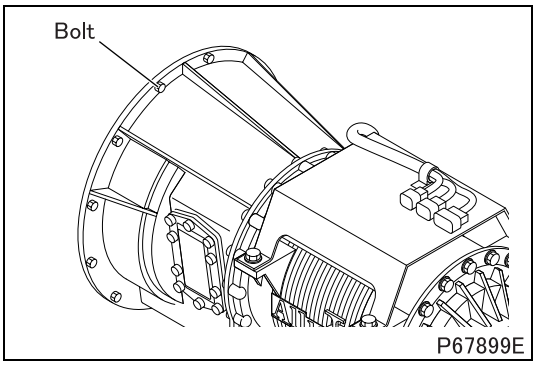

- Check the automatic transmission mounting bolts for looseness.
- Retighten any loose bolt to the specified torque.

3. Inspection of Play and Looseness in Companion Flange

Tightening torque (Unit: N·m {ft.lbs, kgf·m})

Mark	Parts to be tightened	Tightening torque	Remarks
–	Bolt (companion flange mounting)	70 to 80 {52 to 59, 7.1 to 8.2}	–

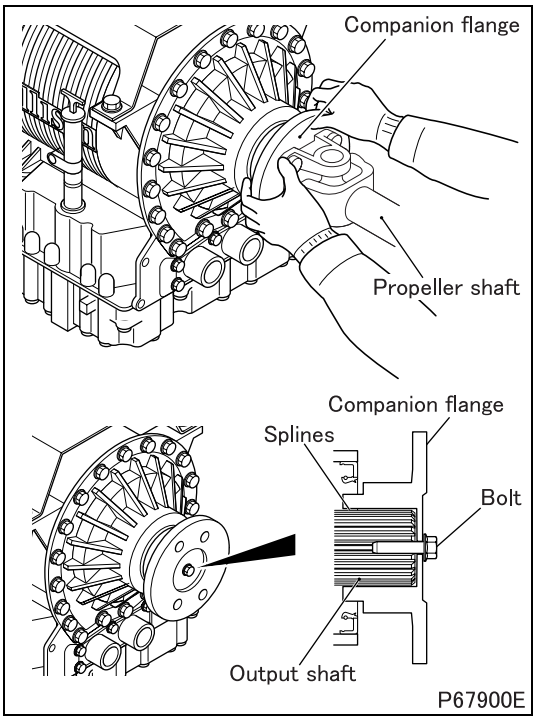

- Move the companion flange in axial and vertical directions to check for excessive play between the companion flange and output shaft.
- If excessive play is detected, remove the propeller shaft, then check the bolt for looseness and the splines on companion flange and output shaft for abnormalities.
- If any bolt is loose, tighten it to the specified torque.
- If the companion flange is found detective, replace the part.
- If the companion flange is not found defective, the output shaft may be defective, contact the Allison Service Station for repair.

4. Inspection of Automatic Transmission Cooling System

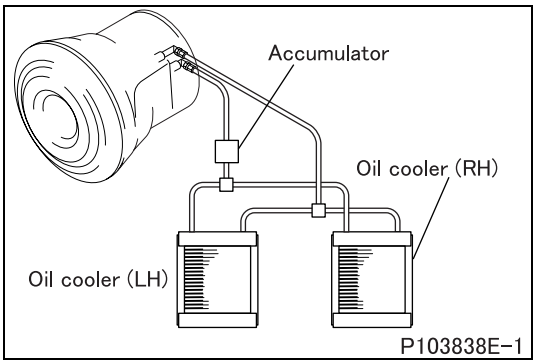

- Check the automatic transmission cooling system for fluid leak and damage. If any abnormality is found, replace the faulty part.

5. Inspection of Automatic Transmission Fluid

Lubricant and/or sealant

Mark	Points of application	Specified lubricant and/or sealant	Quantity
–	Automatic transmission	DEXRON III	As required

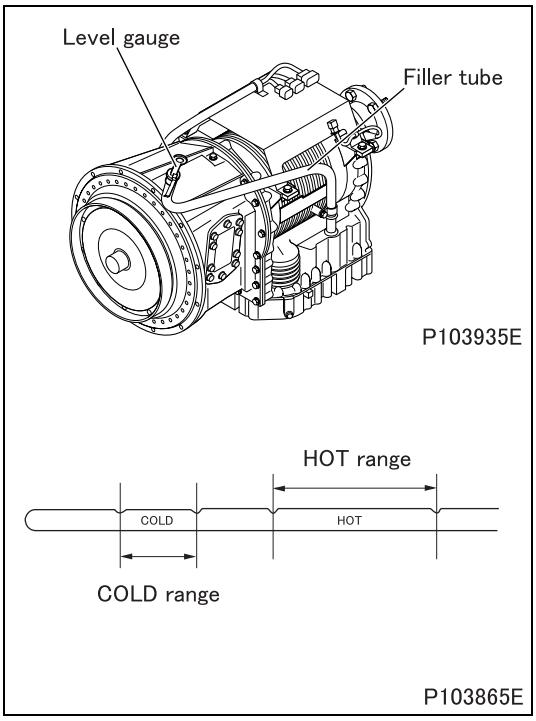

5.1 Inspection of properties

- If having a burnt smell of automatic transmission fluid or finding out some worn particles of metal or friction materials, it is necessary to overhaul the transmission completely. Check automatic transmission fluid adhering to a level gauge carefully. If there are some doubts in a state of automatic transmission fluid, check the automatic transmission fluid again by it extracting its sample.

5.2 Inspection of quantity of automatic transmission fluid

CAUTION ⚠

- **Before performing the test, make sure there is no worker in front and at the rear of the vehicle.**

- Put the vehicle on a flat place, engage the parking brake surely, and fit the chokes securely at the front (rear) of the front (rear) wheels.
- To fill automatic transmission fluid in a hydraulic circuit with idling the engine, return the range selector lever to N range after putting it repeatedly in each range approximately five (5) times in sequence.
- Extract the level gauge with idling the engine; insert it again after wiping off automatic transmission fluid adhered; and after pulling it out, check quantity of the automatic transmission fluid.
- When the oil temperature is low (15 to 50°C {59 to 122°F}) after starting the engine; if automatic transmission fluid is within a “COLD” range of the level gauge, it shows that the quantity of automatic transmission fluid is as specified.
- When the oil temperature is high (70 to 95°C, {158 to 203°F}) after running the vehicle; if automatic transmission fluid is within a “HOT” range of the level gauge, it shows the quantity of automatic transmission fluid is as specified.

WARNING ⚠

- **Since the inspection is conducted with running the engine, be careful of being caught in components, burn hazard, or the safety.**

NOTE

- **Make sure to inspect the quantity of automatic transmission fluid at the horizontal level.**
- **Make sure to inspect the quantity of automatic transmission fluid with idling the engine at N range since the apparent quantity of automatic transmission fluid increases in a state of the engine stop.**
- **Remove any dirt of the protection cap and the upper part of filler tube completely before pulling the level gauge out.**
- **Do not raise the engine speed with keeping the engine in a state of idling until the adjustment of quantity of automatic transmission fluid is completed.**
- **Reconfirm the automatic transmission fluid level after the vehicle runs actually. In case the quantity of automatic transmission fluid is insufficient, replenish DEXRON III to the specified level of level gauge using filler tube.**

6. Replacement of Automatic Transmission Fluid

Lubricant and/or sealant

Mark	Points of application	Specified lubricant and/or sealant	Quantity
–	Automatic transmission	DEXRON III	18 dm^3 {18 L}

Tightening torque (Unit: N·m {ft.lbs, kgf·m})

Mark	Parts to be tightened	Tightening torque	Remarks
–	Drain plug	25 to 32 {18 to 24, 2.6 to 3.3}	–

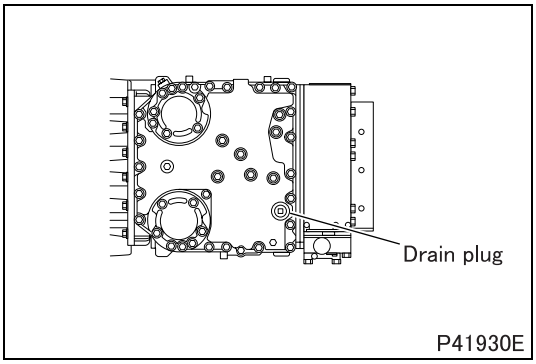

6.1 Discharge

- Put the automatic transmission fluid receptacle under the transmission oil pan; then remove drain plug behind the oil pan to discharge automatic transmission fluid.

WARNING ⚠

- **Do not start any work for engine immediately after the engine is shut down. Wait until the engine cools to a safe temperature since a hot engine can cause burns.**

NOTE

- **The discharge can be made more quickly by warming automatic transmission fluid due to the warm-up operation.**
- **It is impossible to discharge automatic transmission fluid which is located around the hydraulic circuit, the converter, or the oil cooler.**
- **Check any dirt of automatic transmission fluid discharged, and any existence of metallic powder or metal pieces.**

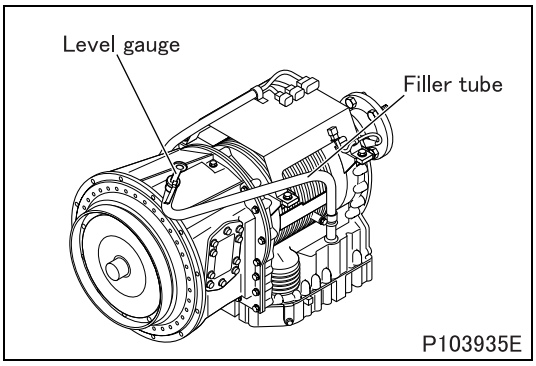

6.2 Injection

- Install oil pan drain plug to its original state.
- Inject automatic transmission fluid in regulation quantity from filler tube.

CAUTION ⚠

- **Be careful of the injection so that any dust or foreign particles may not enter.**

- After starting the engine, conduct the idling drive for approximately one (1) minute with engaging the range selector to “N” range.
- After rounding the range selector to each range, engage it to “N” range again.

CAUTION ⚠

- **In this process, only conduct the idling drive for the engine; make sure to avoid just revving the engine.**

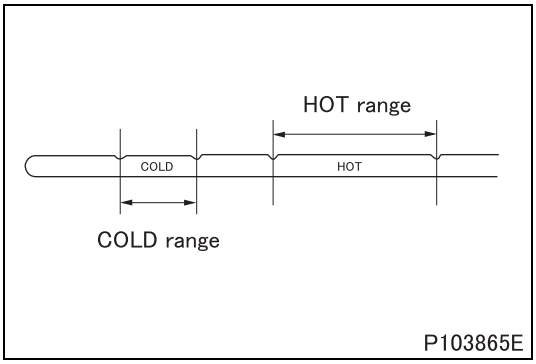

- Replenish automatic transmission fluid until it reaches the low position of the specified range of level gauge. Then, check the level of automatic transmission fluid. The level of automatic transmission fluid must be within the specified range of the level gauge.
  "COLD" range: When temperature is low; 15 to 50°C {59 to 122°F}
  "HOT" range: When temperature is high; 70 to 95°C {158 to 203°F}

NOTE

- **After injecting automatic transmission fluid, it may be difficult to see the level of automatic transmission fluid easily due to the automatic transmission fluid adhering to the inner wall of filler tube; therefore, reconfirm it after a short time.**
- **If injecting automatic transmission fluid too much, the automatic transmission fluid begins to overflow from the air breather; as result, it might be misunderstood that the leakage of automatic transmission fluid be caused.**
- **Inject automatic transmission fluid gradually with letting the engine idle while paying a careful attention to the level of automatic transmission fluid.**

7. Level Check of Automatic Transmission Fluid

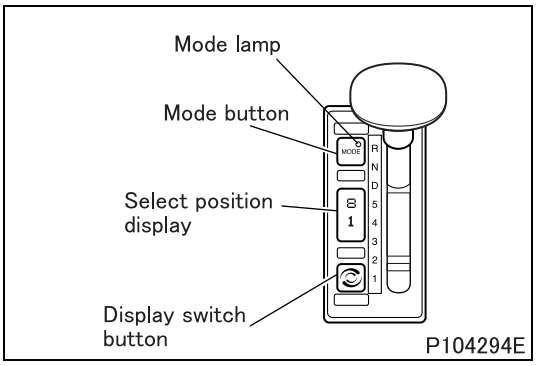

- This automatic transmission can check automatic transmission fluid level by operating the range selector.

7.1 Conditions required on check

- Stop the vehicle at a flat place, and put the range selector in “N” position.
  (Neutral must be put in.)
- Automatic transmission fluid must be warm.
  (oil temperature 60 to 104°C {140 to 220°F})
- Stabilize oil level at intervals of two minutes or more after stopping the vehicle.
- Put the engine in a state of idling rotation.

7.2 Check operation

- Push display switch button of the range selector.
- Various code No. are displayed in the position display of the selector following “o” and “L” (indicating check mode of automatic transmission fluid level) after approximately two minutes.

7.3 Judgment of check result

The code No. indicated means as follows:

- “oL”, “oK” ; automatic transmission fluid level is appropriate.
- “oL”, “Lo”, and “XX” ; automatic transmission fluid must be added by approximately XX qts.
- “oL”, “HI”, and “XX” ; automatic transmission fluid must be extracted by approximately XX qts.
- “oL”, “--”, and “XX” ; check the level again based on the following table since the level could not be checked.

Display code No. XX	Contents
“0X”	Settling time too short.
“EL”	The engine speed is too low.
“EH”	The engine speed is too high.
“SN”	The neutral has not been selected.
“TL”	Oil temperature is too low.
“TH”	Oil temperature is too high.
“SH”	Output shaft rotation.
“FL”	Faulty oil level sensor in the automatic transmission body.

7.4 Operation after the check has ended

- There are the following two methods to return it to normal operation mode.
- Push the display switch button of range selector twice.
- Shift the lever from the current range to another range (Reverse, Neutral or Drive).

8. Replacement of Oil Filter

Tightening torque (Unit: N·m {ft.lbs, kgf·m})

Mark	Parts to be tightened	Tightening torque	Remarks
–	Bolt (installing filter cover)	57 to 68 {42 to 50, 5.8 to 6.9}	–

Lubricant and/or sealant

Mark	Points of application	Specified lubricant and/or sealant	Quantity
–	Seal	DEXRON III	As required
–	O-ring		
–	Engagement part of filter		

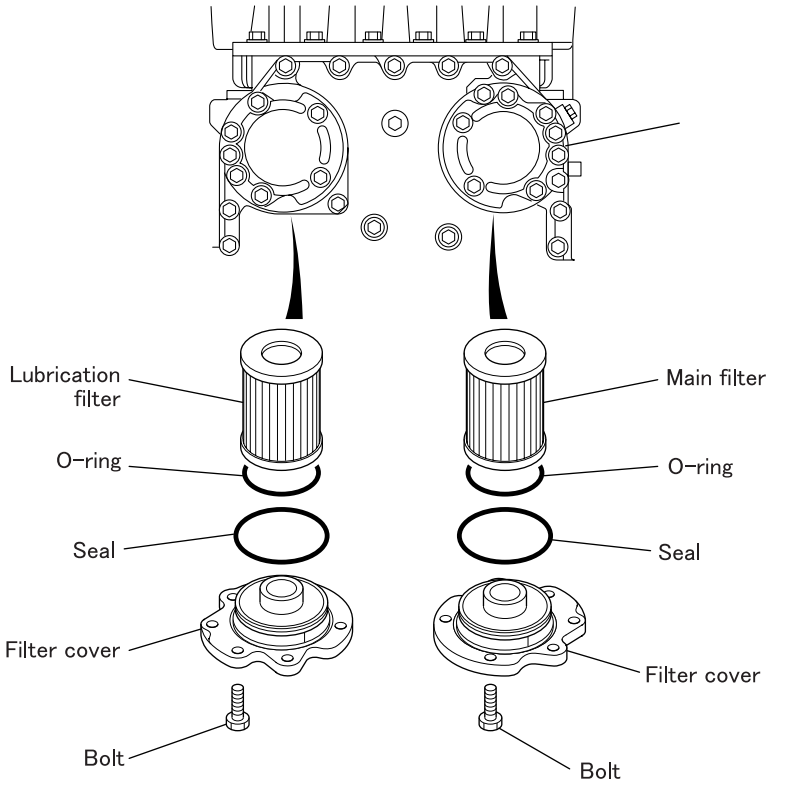

9. Stall Test

Service standards

Location	Maintenance item	Standard value	Limit	Remedy
–	Stall resolutions	1750 ± 150 rpm	–	Ask for repair.

9.1 Purpose

- "Stall test" checks the friction element in transmission, slide of oneway clutch in torque converter, operation of torque converter, or overall performance of the engine; thereby investigates the cause when the vehicle is malfunctioned due to insufficient power, performance, or others.

9.2 Measurement procedure

CAUTION ⚠

- **Before performing the test, make sure there is no worker in front and at the rear of the vehicle.**

- Before starting the test, check the cooling water and oil of the engine, and automatic transmission fluid level of automatic transmission. Also, conduct sufficient warm-up operation of the engine and transmission.
- Fit the chocks securely at the front (rear) of the front (rear) wheels and engage the parking brake to prevent the vehicle from moving. In addition, when pushing the accelerator pedal down, press the foot brake strongly.
- Start the engine and engage the range selector lever into D range.
- Push the accelerator pedal down slowly to the full acceleration; when the engine comes into a stable speed at a constant speed, read the revolutions (the stall revolutions) quickly, and then take off the foot from the accelerator pedal.

CAUTION ⚠

- **Be sure to set a full stall acceleration time as less than 5 seconds, and complete the measurement during that time.**
- **Be careful for overheating of the engine and transmission.**

- Put the range selector lever in "N" range, and conduct the cooling for two minutes or more per 1000 rpm.

9.3 Result of diagnosis

- In case the stall revolution is too low; if the result of measurement is lower by 150 rpm or more than the standard value, the engine will be malfunctioned. (See Gr13EA.)
- In case the stall revolution is abnormally low (approximately 1/3 of the specified value) even though the engine has no any trouble like emitting black smoke; there may be some abnormality inside the torque converter (one-way clutch failure).
- In case the stall revolution is too high; if the result of measurement is higher by 150 rpm or more than the standard value, the cause may be due to the slide inside the transmission, cavitations, the bubbling of automatic transmission fluid, or damage of the torque converter.
- If the automatic transmission proper is found defective, contact the Allison Service Station for repair.

10. Line Pressure Test

Tightening torque (Unit: N·m {ft.lbs, kgf·m})

Mark	Parts to be tightened	Tightening torque	Remarks
–	Plug	10 to 13 {7.2 to 9.4, 1.0 to 1.3}	Ask for repair.

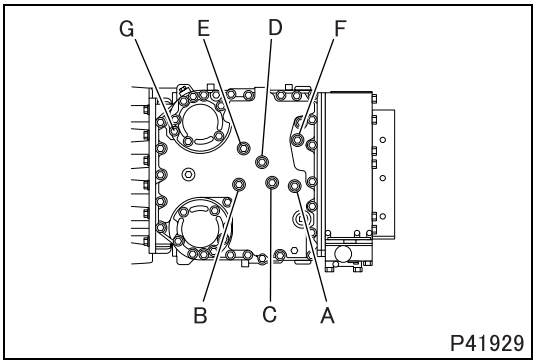

10.1 Purpose

- "Line pressure test" checks the performance of oil pump, function of control valve, and the oil leaking of each component.

10.2 Measurement procedure

- Decide the pressure item to check according to the content of troubles, and measure the line pressure based on the following procedure.
- Remove the plug from the pressure detecting port of the gearbox casing, and install the pressure gauge.
  - A: Main oil pressure
  - B: C1 clutch oil pressure
  - C: C2 clutch oil pressure
  - D: C3 clutch oil pressure
  - E: C4 clutch oil pressure
  - F: C5 clutch oil pressure
  - G: Lock-up oil pressure
- Conduct a sufficient warm-up operation, and raise oil temperature to 60 to 80°C {140 to176°F}.
- Remove the propeller shaft to simulate the running condition.
- Measure the main oil pressure, clutch oil pressures and lock-up clutch pressure at idling condition and simulated running condition. Make sure the following conditions are satisfied.
  - Measured main oil pressure and lock-up clutch oil pressure are within the standard value.
  - The difference between the measured clutch oil pressure and the main oil pressure is 75 kPa {11 psi, 0.8 kgf/cm^2} or lower and also satisfies the standard value.
- After measurement, remove dust and dirt around the pressure detecting ports and tighten the plugs to the specified torque.

CAUTION ⚠

- **Be sure to prevent foreign particles from entering the pressure detecting port.**

10.3 Standard line pressure table

	Engine speed rpm	*Range	Main oil pressure KPa {psi, kgf/cm^2}	Pressure clutch	Clutch oil pressure KPa {psi, kgf/cm^2}	Lock-up clutch oil pressure KPa {psi, kgf/cm^2}
Oil pressure when idling the engine	580 – 620	Neutral	1310 to 1725 {190 to 250, 13 to 18}	C5	1235 to 1725 {180 to 250, 13 to 18}	10 to 35 {1 to 5, 0.1 to 0.4}
		Reverse	1170 to 1585 {170 to 230, 12 to 16}	C3, C5	1095 to 1585 {160 to 230, 11 to 16}	10 to 35 {1 to 5, 0.1 to 0.4}
		1C	870 to 1340 {125 to 195, 8.9 to 14}	C1, C5	795 to 1340 {115 to 195, 8.1 to 14}	10 to 35 {1 to 5, 0.1 to 0.4}
		2C	870 to 1340 {125 to 195, 8.9 to 14}	C1, C4	795 to 1340 {115 to 195, 8.1 to 14}	10 to 35 {1 to 5, 0.1 to 0.4}
Oil pressure when operating	2080 – 2120	Neutral	1805 to 2205 {260 to 320, 18 to 22}	C5	1730 to 2205 {250 to 320, 18 to 22}	160 to 240 {23 to 35, 1.6 to 2.4}
		Reverse	1805 to 2205 {260 to 320, 18 to 22}	C3, C5	1730 to 2205 {250 to 320, 18 to 22}	160 to 240 {23 to 35, 1.6 to 2.4}
		1C	1550 to 1965 {225 to 285, 16 to 20}	C1, C5	1475 to 1965 {215 to 285, 15 to 20}	160 to 240 {23 to 35, 1.6 to 2.4}
		2C	1550 to 1965 {225 to 285, 16 to 20}	C1, C4	1475 to 1965 {215 to 285, 15 to 20}	160 to 240 {23 to 35, 1.6 to 2.4}
		2L	1080 to 1365 {155 to 200, 11 to 14}	C1, C4, LU	1005 to 1365 {145 to 200, 10 to 14}	160 to 240 {23 to 35, 1.6 to 2.4}
		3C	1550 to 1965 {225 to 285, 16 to 20}	C1, C3	1475 to 1965 {215 to 285, 15 to 20}	160 to 240 {23 to 35, 1.6 to 2.4}
		3L	1080 to 1365 {155 to 200, 11 to 14}	C1, C3, LU	1005 to 1365 {145 to 200, 10 to 14}	160 to 240 {23 to 35, 1.6 to 2.4}
		4C	1550 to 1965 {225 to 285, 16 to 20}	C1, C2	1475 to 1965 {215 to 285, 15 to 20}	125 to 200 {18 to 30, 1.3 to 2.0}
		4L	1080 to 1365 {155 to 200, 11 to 14}	C1, C4, LU	1005 to 1365 {145 to 200, 10 to 14}	125 to 200 {18 to 30, 1.3 to 2.0}
		5C	1550 to 1965 {225 to 285, 16 to 20}	C2, C3	1475 to 1965 {215 to 285, 15 to 20}	125 to 200 {18 to 30, 1.3 to 2.0}
		5L	1080 to 1365 {155 to 200, 11 to 14}	C2, C3, LU	1005 to 1365 {145 to 200, 10 to 14}	125 to 200 {18 to 30, 1.3 to 2.0}
		6C	1345 to 1590 {220 to 290, 14 to 16}	C2, C4	1270 to 1590 {185 to 230, 13 to 16}	125 to 200 {18 to 30, 1.3 to 2.0}
		6L	1035 to 1415 {195 to 230, 11 to 14}	C2, C4, LU	960 to 1415 {140 to 205, 9.8 to 14}	125 to 200 {18 to 30, 1.3 to 2.0}

* C: In torque converter (lock-up clutch disengaged), L: In lock-up

10.4 Result of diagnosis

- In case the main oil pressure is low in all ranges:
  - Automatic transmission fluid level; too low
  - Filter Element; clogged
  - Suction filter; clogged
  - Main oil pressure regulator valve; adhered, and the spring; weakening or broken
  - Inside of control module; leaked
  - Oil pump; worn or broken
- In case the oil pressure is low in the specific ranges (each clutch oil pressure):
  - If C1 clutch pressure is low; may cause slide or judder at 1st, 2nd, 3rd, or 4th gear.
  - If C2 clutch pressure is low; may cause slide or judder at 4th, 5th, or 6th gear.
  - If C3 clutch pressure is low; may cause slide or judder at 3rd, 5th, or Rev. gear.
  - If C4 clutch pressure is low; may cause slide or judder at 2nd, or 6th gear.
  - If C5 clutch pressure is low; may cause slide or judder at 1st or Rev. gear.
  - If the lock-up clutch pressure is low; the speed extension of vehicle at 2nd or more gear (in lock-up) may be decreased. Or, the shift will not be performed as it is a shift map.
  - If the automatic transmission proper is found defective, contact the Allison Service Station for repair.

11. Road Test

Service standards (Unit: km/h {mph})

Location	Maintenance item			Standard value	Limit	Remedy
–	Shifting point (D range) [Economy mode/ Power mode]	At half throttle Accelerator opening: 4/8	1st → 2nd	14 to 17 {9 to 11}/ 16 to 19 {10 to 12}	–	Ask for repair.
			2nd → 3rd	27 to 30 {17 to 19}/ 31 to 34 {19 to 21}	–	
			3rd → 4th	36 to 39 {22 to 24}/ 41 to 44 {26 to 27}	–	
			4th → 5th	48 to 51 {30 to 32}/ 55 to 58 {34 to 36}	–	
			5th → 6th	69 to 72 {43 to 45}/ 78 to 81 {49 to 50}	–	
		At full throttle Accelerator opening: 8/8	1st → 2nd	14 to 17 {9 to 11}/ 16 to 19 {10 to 12}	–	
			2nd → 3rd	35 to 38 {22 to 24}/ 40 to 43 {25 to 27}	–	
			3rd → 4th	48 to 50 {30 to 31}/ 54 to 57 {34 to 35}	–	
			4th → 5th	68 to 71 {42 to 44}/ 77 to 80 {48 to 50}	–	
			5th → 6th	93 to 95 {58 to 59}/ 104 to 107 {65 to 67}	–	
		At closed throttle Accelerator opening: 0/8	6th → 5th	61 to 64 {38 to 40}/ 68 to 71 {42 to 44}	–	
			5th → 4th	39 to 42 {24 to 26}/ 40 to 43 {25 to 27}	–	
			4th → 3rd	29 to 32 {18 to 20}/ 30 to 33 {19 to 21}	–	
			3rd → 2nd	20 to 23 {12 to 14}/ 21 to 24 {13 to 15}	–	
			2nd → 1st	6 to 9 {4 to 6}/ 5 to 8 {3 to 5}	–	
–	Lock-up point [Economy mode/ Power mode] (reference)	At half throttle Accelerator opening: 4/8	OFF → ON	20 to 23 {12 to 14}/ 23 to 26 {14 to 16}	–	Ask for repair.
		At full throttle Accelerator opening: 8/8	OFF → ON	24 to 27 {15 to 17}/ 28 to 30 {17 to 19}	–	
		At closed throttle Accelerator opening: 0/8	ON → OFF	14 to 17 {9 to 11}/ 14 to 17 {9 to 11}	–	

11.1 Measuring procedure

- Before starting the road test, make sure that the transmission fluid level has been checked, the fluid has been inspected and the selector cable has been adjusted.
- During the road test, operate the automatic transmission with gears shifted into different positions and check for the feeling of a gear slip and any other abnormalities.
- Check for too hard or too soft feeling of gear shift.
- Check for shift-up and shift-down points.

- The value shown in the table is calculated under the following condition.
  For the vehicle with different differential ratio or tire size, the vehicle speed varies from the value in the table. In such case, the value should be converted based on such deviation.

Differential ratio	Tire size (radius)
6.666	11R22.5 (0.508)

- If the measurement is out of specification, contact the Allison service station for repair.

OIL COOLER

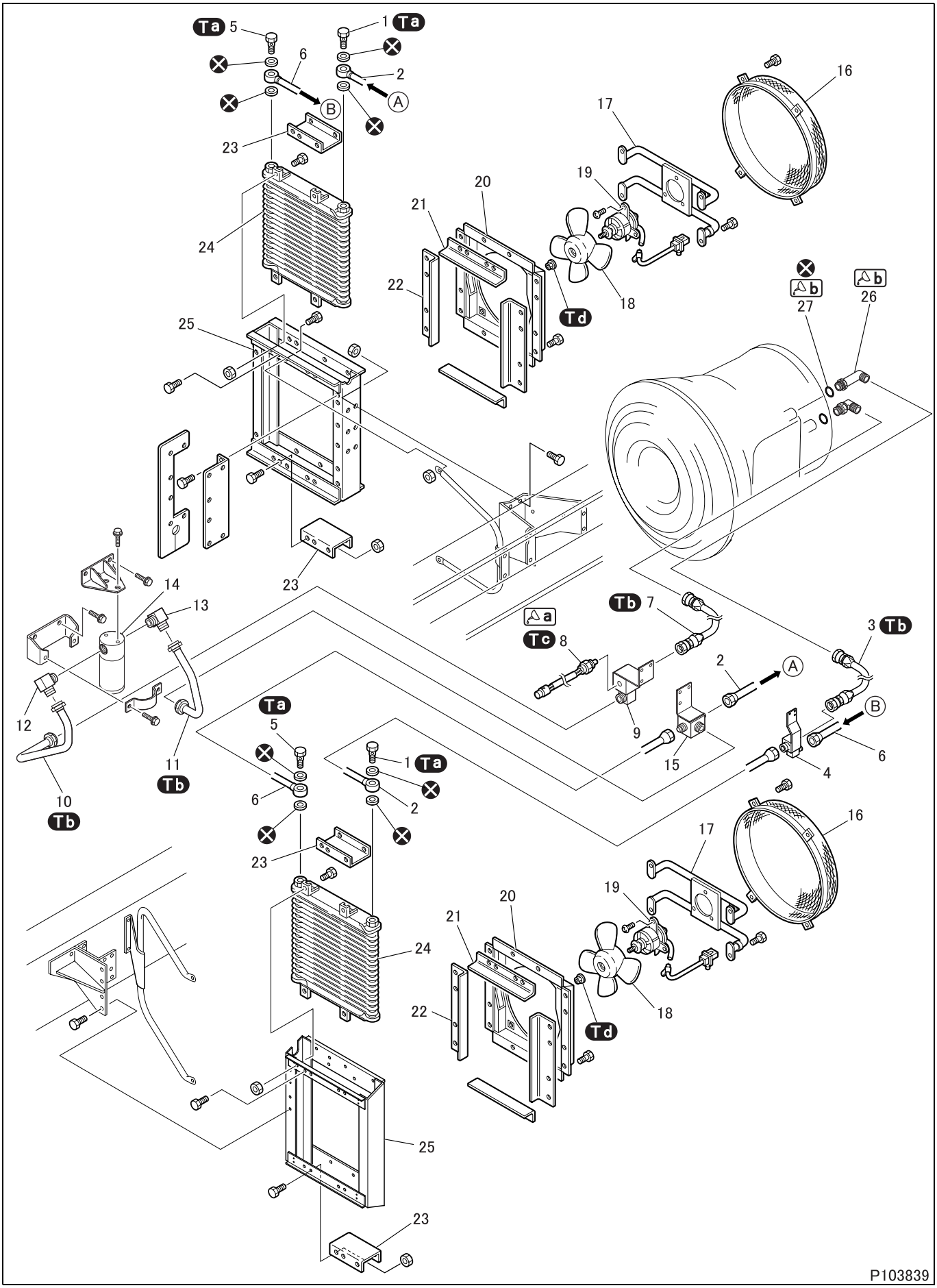

● **Disassembly sequence**

1 Eyebolt
2 Oil pipe
3 Oil hose
4 Connector
5 Eyebolt
6 Oil pipe
7 Oil hose
8 Automatic transmission fluid temperature switch
9 Connector
10 Oil pipe
11 Oil pipe
12 Connector
13 Connector
14 Accumulator
15 Connector
16 Fan cover
17 Fan motor bracket
18 Fan
19 Motor
20 Fan shroud
21 Fan shroud A
22 Fan shroud B
23 Stay
24 Oil cooler
25 Oil cooler bracket
26 Connector
27 O-ring

⊗: Non-reusable parts

● **Assembly sequence**

Follow the disassembly sequence in reverse.

Tightening torque (Unit: N·m {ft.lbs, kgf·m})

Mark	Parts to be tightened	Tightening torque	Remarks
Ta	Eyebolt	73.5 {54, 7.5}	–
Tb	Oil hose	118 {87, 12}	–
	Oil pipe		
Tc	Automatic transmission fluid temperature switch	29 to 39 {22 to 29, 3 to 4}	–
Td	Nut (fan mounting)	4.22 to 5.20 {3.1 to 3.8, 0.4 to 0.5}	–

Lubricant and/or sealant

Mark	Points of application	Specified lubricant and/or sealant	Quantity
a	Automatic transmission fluid temperature switch	ThreeBond 1110B	As required
b	O-ring	DEXRON III	As required
	O-ring contact surface of connector		

◆**Installation procedure**◆

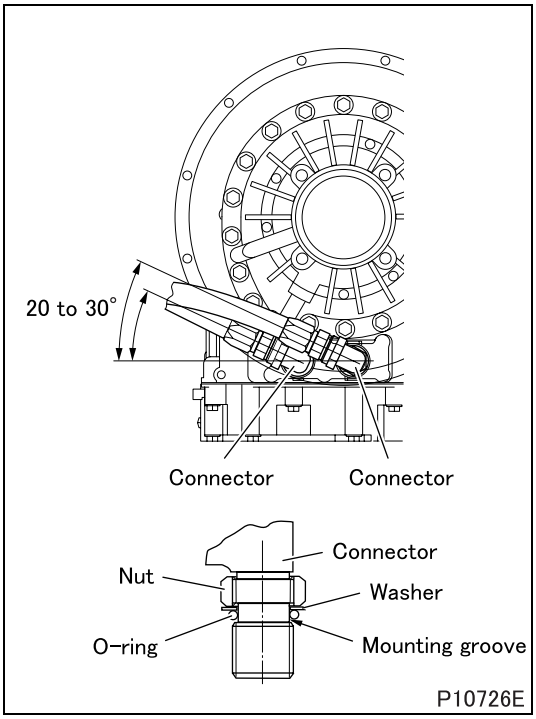

■ **Installation: Connector**

- Tighten the nut of the connector by hand until it touches the connector and install the O-ring securely in the mounting groove.
- Tighten the connector by hand until the washer touches the automatic transmission and then loosen it to the angle shown in the illustration.
- While keeping the connector in this position, tighten the nut to the automatic transmission side.

◆Inspection after installation◆

■**Inspection: Quantity of automatic transmission fluid**

- If any oil line was removed, check the quantity of automatic transmission fluid and add as necessary.

M E M O

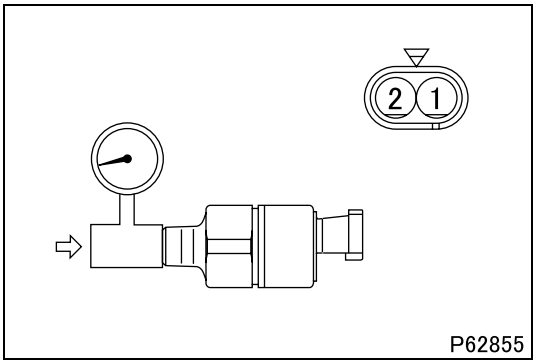

#042 Inspection of stop lamp switch

- Perform the following inspection. If any abnormality is found, replace the switch.

(1) Inspection by applying no air pressure

- Make sure that there is no continuity between terminals 1 and 2.

(2) Inspection by applying air pressure

- Apply air pressure to the switch gradually from 0 kPa {0 psi, 0 kgf/cm^2}.
- Measure the air pressure when continuity is established across terminals 1 and 2, and make sure that the air pressure is within the standard value.

Standard value (operating pressure)	29 ± 9.8 kPa {4.2 ± 1.4 psi, 0.3 ± 0.1 kgf/cm^2}

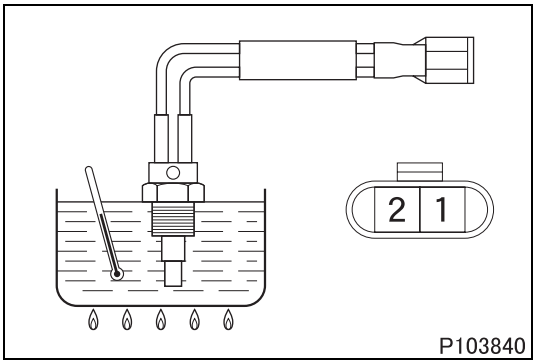

#153 Inspection of automatic transmission fluid temperature switch

- Place the switch in a container.
- Raise the oil temperature to the specified values and stir the oil.
- Measure the operating temperature between terminals 1 and 2 respectively.

Standard value	When temperature increases (OFF → ON)	108 ± 3°C {225 ± 5.4°F}
	When temperature decreases (ON → OFF)	101°C {215°F} or more

- If the measured value deviates from the standard value, replace the switch.

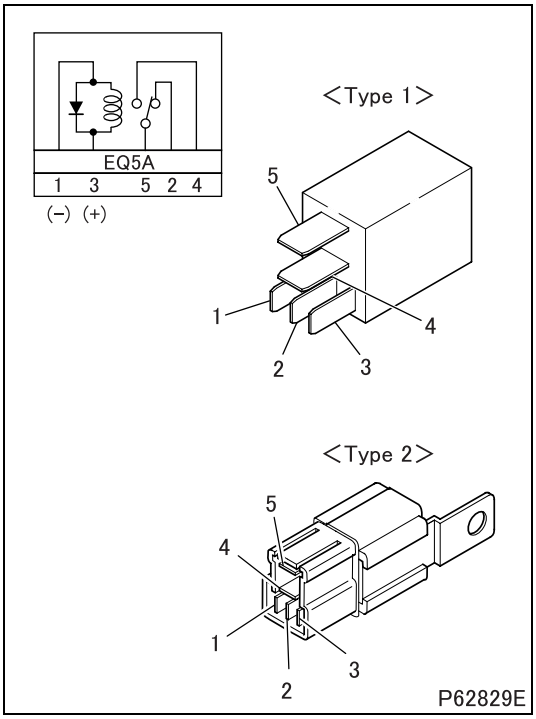

#201 Inspection of relay (normally open, 5-pin type)

- Perform a continuity check and an operation check. If there is any abnormality, replace the relay.

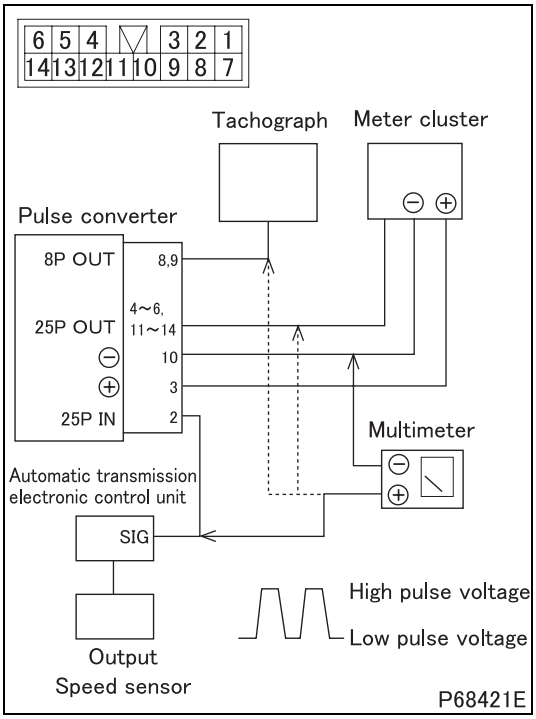

#352 Inspection of pulse converter

- Check the pulse converter with the automatic transmission electronic control unit installed in the vehicle.
- With the starter switch in the ON position, slowly turn the wheels by means of a chassis dynamo or any other appropriate means.
- Measure the maximum voltage (high pulse voltage) and minimum voltage (low pulse voltage) values of the voltage between each of input and output terminals and terminal 10 of the pulse converter.

(1) Output measurement

Standard value	8 pulse output (between terminals 8, 9 and 10)	Low pulse voltage	1.5 V or lower
		High pulse voltage	{Input voltage (battery) –0.5 V} or higher
	25 pulse output (between terminals 4 to 6, 11 to 14 and 10)	Low pulse voltage	0.5 V or lower
		High pulse voltage	$8^{+1.5}_{-1.0}$ V

- If measurement deviates from the standard value, conduct input measurement.

(2) Input measurement

Standard value 25 pulse input (between terminals 2 and 10)	Low pulse voltage	0.5 V or lower
	High pulse voltage	8 ± 1 V

- If measurement meets the standard value, signals from the automatic transmission electronic control unit should be normal. Accordingly, replace the pulse converter.
- If measurement deviates from the standard value, check the automatic transmission.

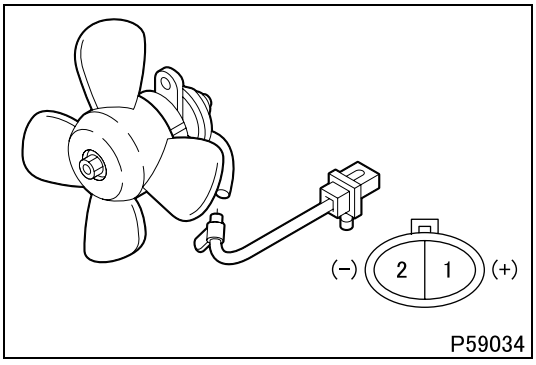

#489 Inspection of motor

- Check that the motor runs when the battery voltage is applied to terminals 1 and 2.
- If there is any abnormality, replace the motor.

INSTALLED LOCATIONS OF PARTS

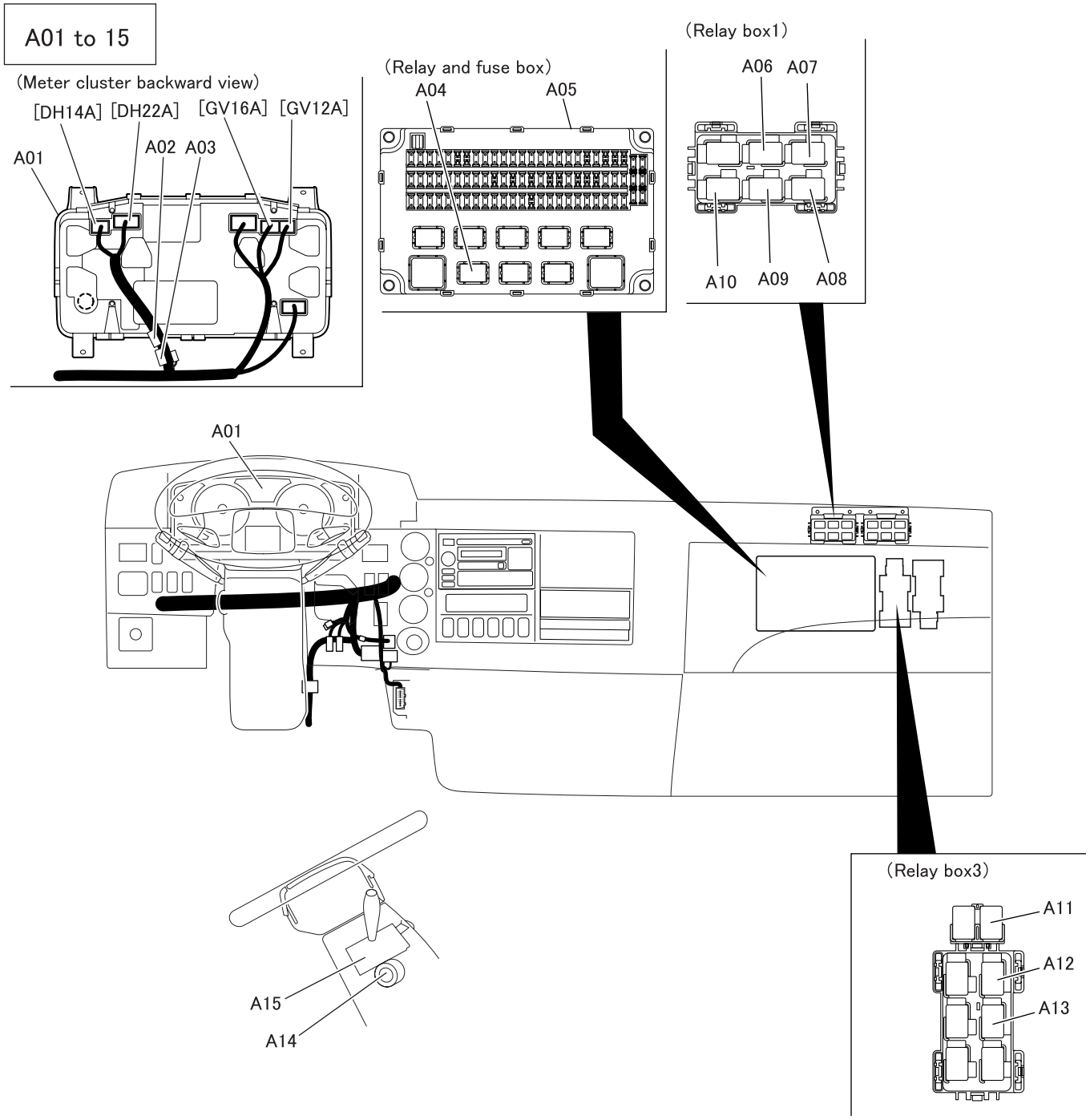

A01 Meter cluster
A02 Joint connector (J/C-2)
A03 Joint connector (J/C-6)
A04 Stop lamp relay
A05 Relay and fuse box
A06 Fan motor relay-1
A07 Fan motor relay-2
A08 Selector neutral relay
A09 A/T ABS activation signal relay
A10 A/T stop lamp relay
A11 Neutral start relay
A12 Safety relay
A13 ABS exhaust brake cut relay
A14 Starter switch
A15 Combination switch

A/T : Automatic transmission
N/P : Neutral/Parking
ABS : Anti-lock brake system
[ ]: Indicate by connector type

L02648

A20

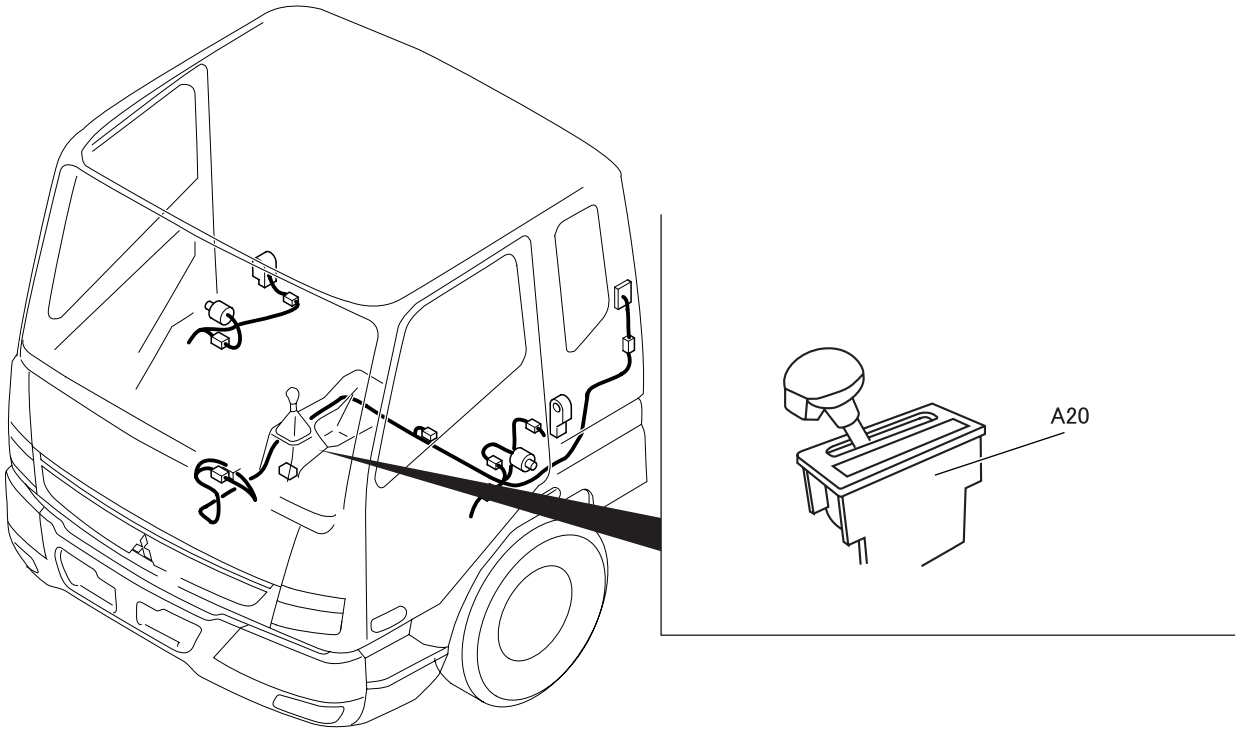

A20 Range selector

INSTALLED LOCATIONS OF PARTS

A25 to 32

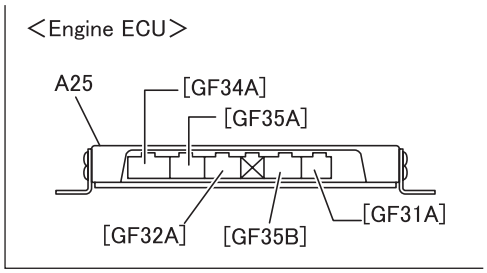

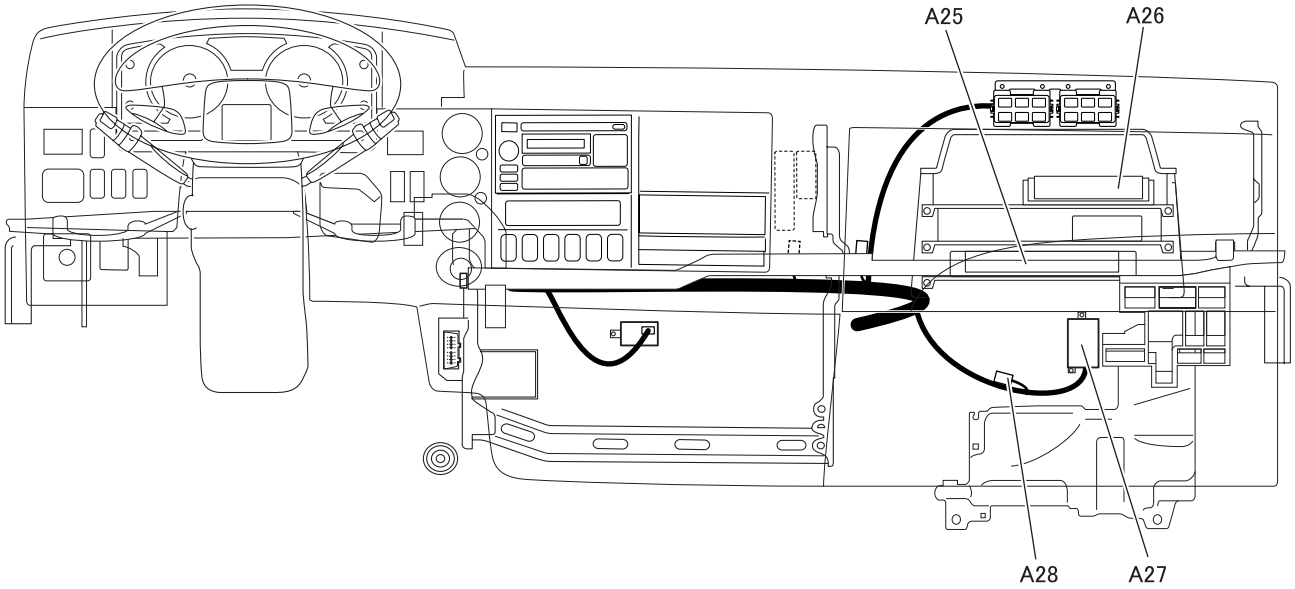

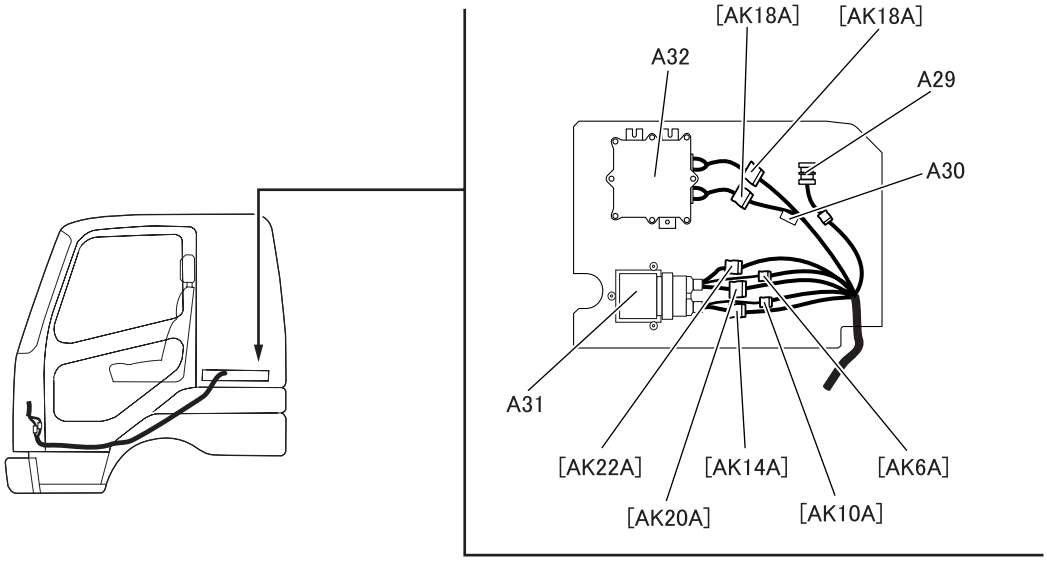

A25 Engine ECU
A26 ABS ECU
A27 Pulse converter
A28 Diode unit
A29 Diagnostic connector
(for allison exclusive diagnosis tool)
A30 Joint connector (J/C-3)
A31 A/T ECU
A32 Vehicle interface module

ABS : Anti-lock brake system
A/T : Automatic transmission
ECU : Electronic control unit

Indicate by connector type [ ].

L02650

A35 to 43

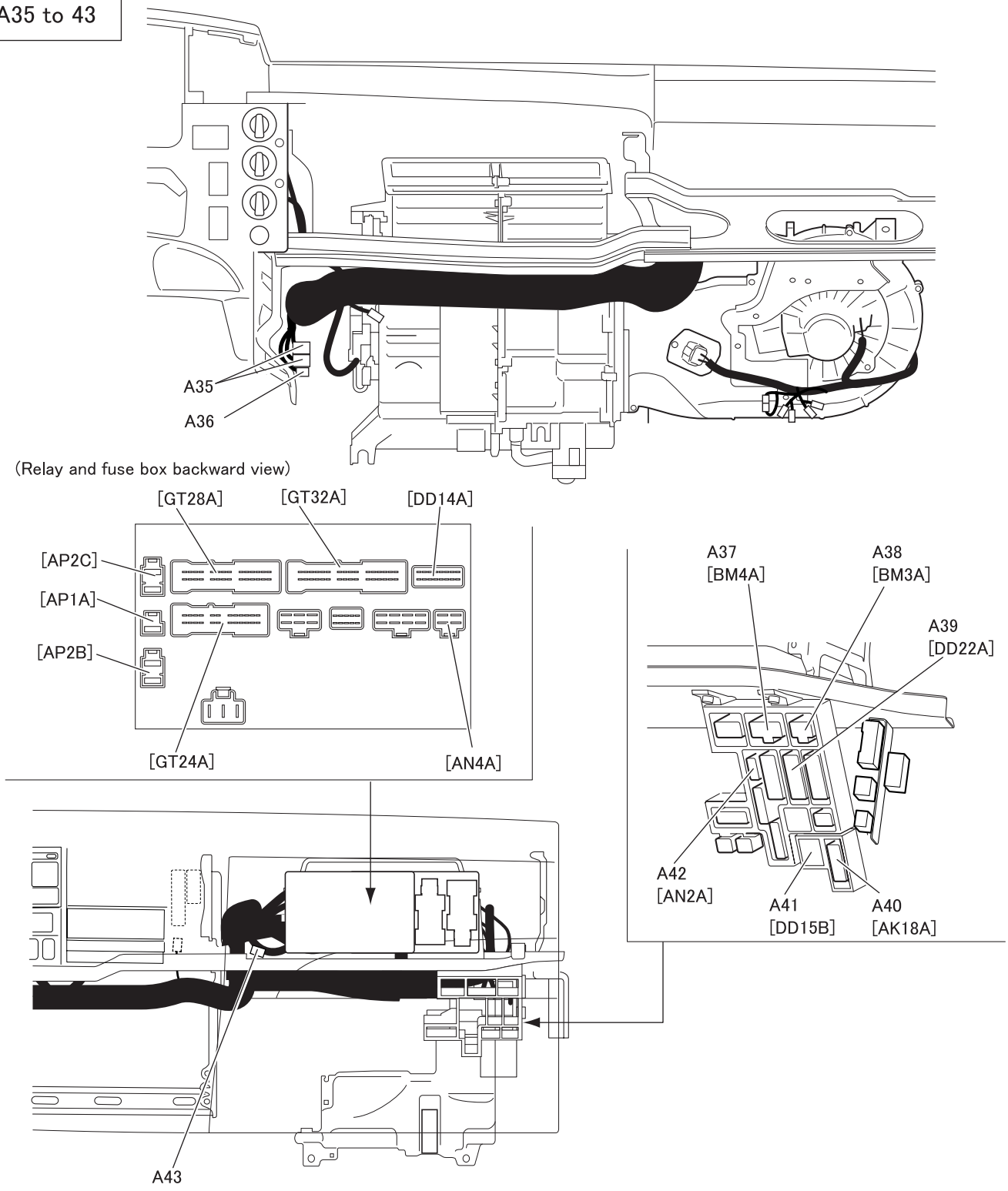

A35 Connection of cab harness and A/T harness
A36 Connection of cab harness and center floor harness
A37–39 Connection of cab harness and chassis harness
A40–41 Connection of A/T harness and chassis harness
A42 Connection of cab harness and chassis harness
A43 Joint connector (J/C–1, 3, 4)

A/T : Automatic transmission

L02651

B01 to 09

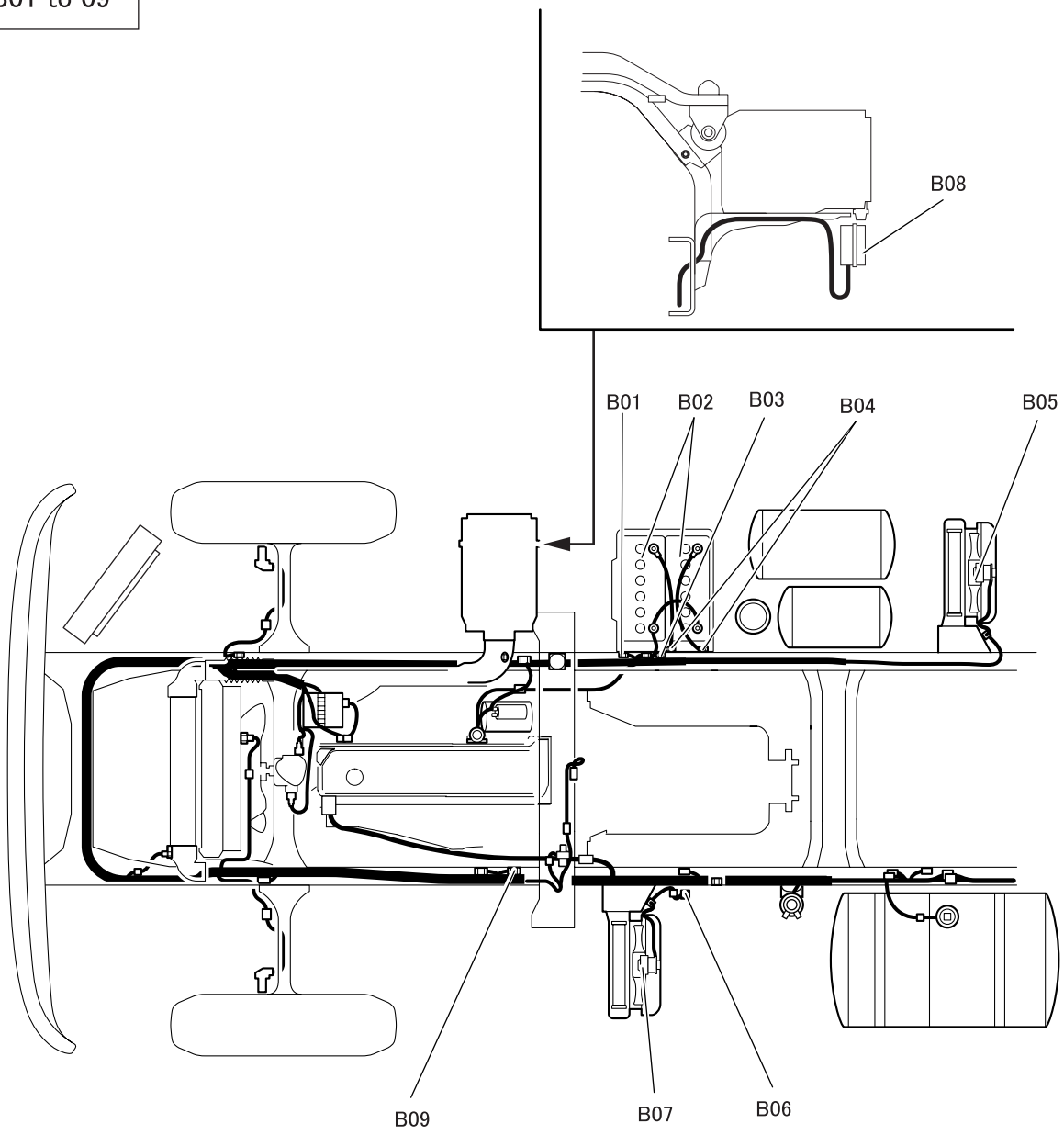

B01 Ground
B02 Battery
B03 Ground
B04 Ground
B05 Motor2
B06 A/T fluid temperature switch
B07 Motor1
B08 High-current fuse box
B09 Ground

A/T : Automatic transmission

L02652

C01 to 02

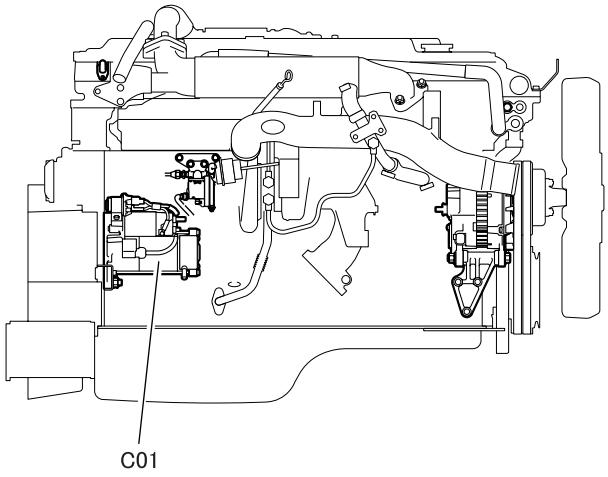

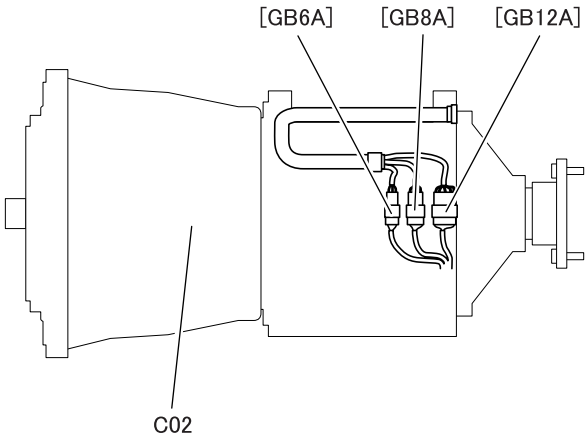

C01 Starter
C02 Automatic transmission

ELECTRICAL CIRCUIT DIAGRAM

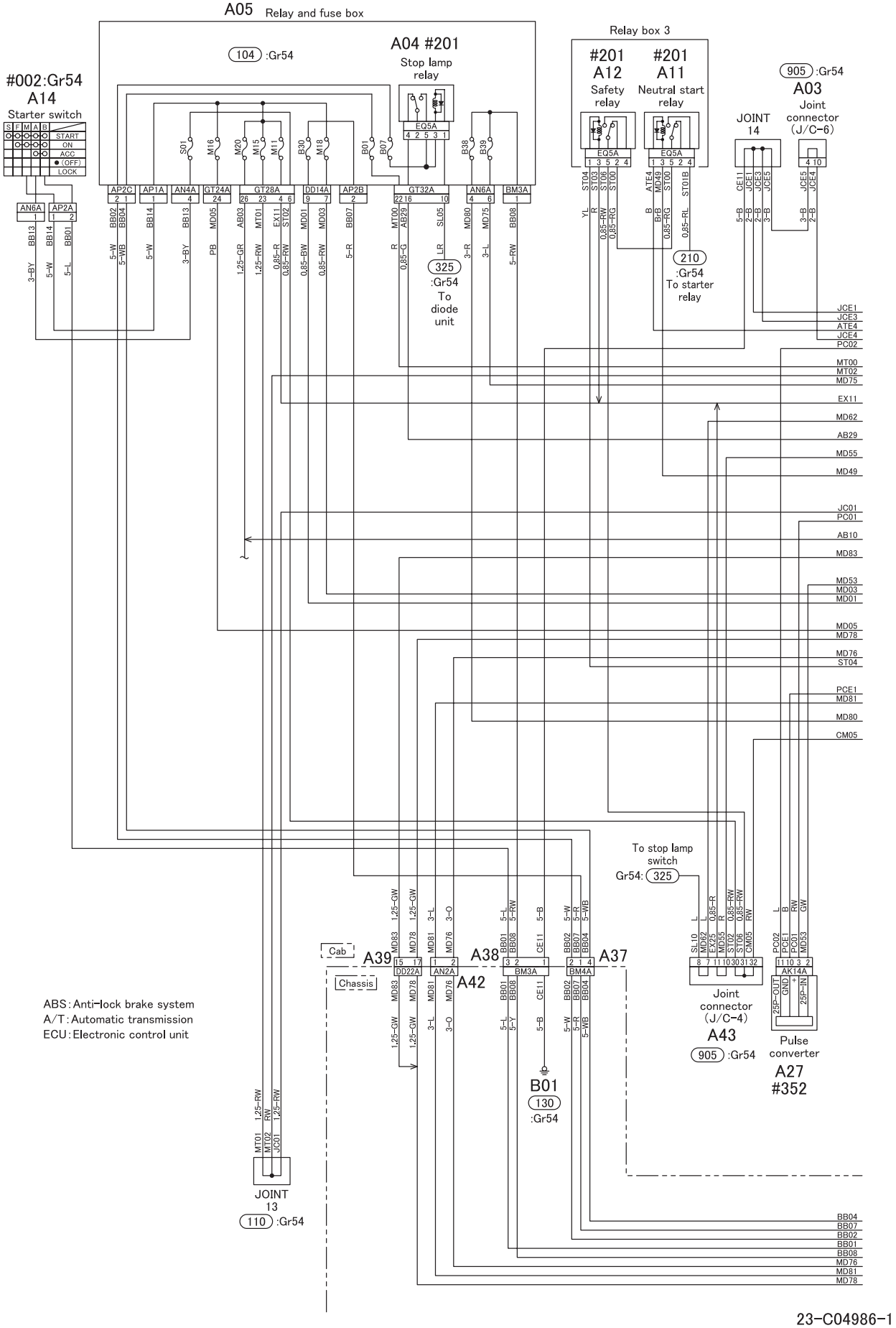

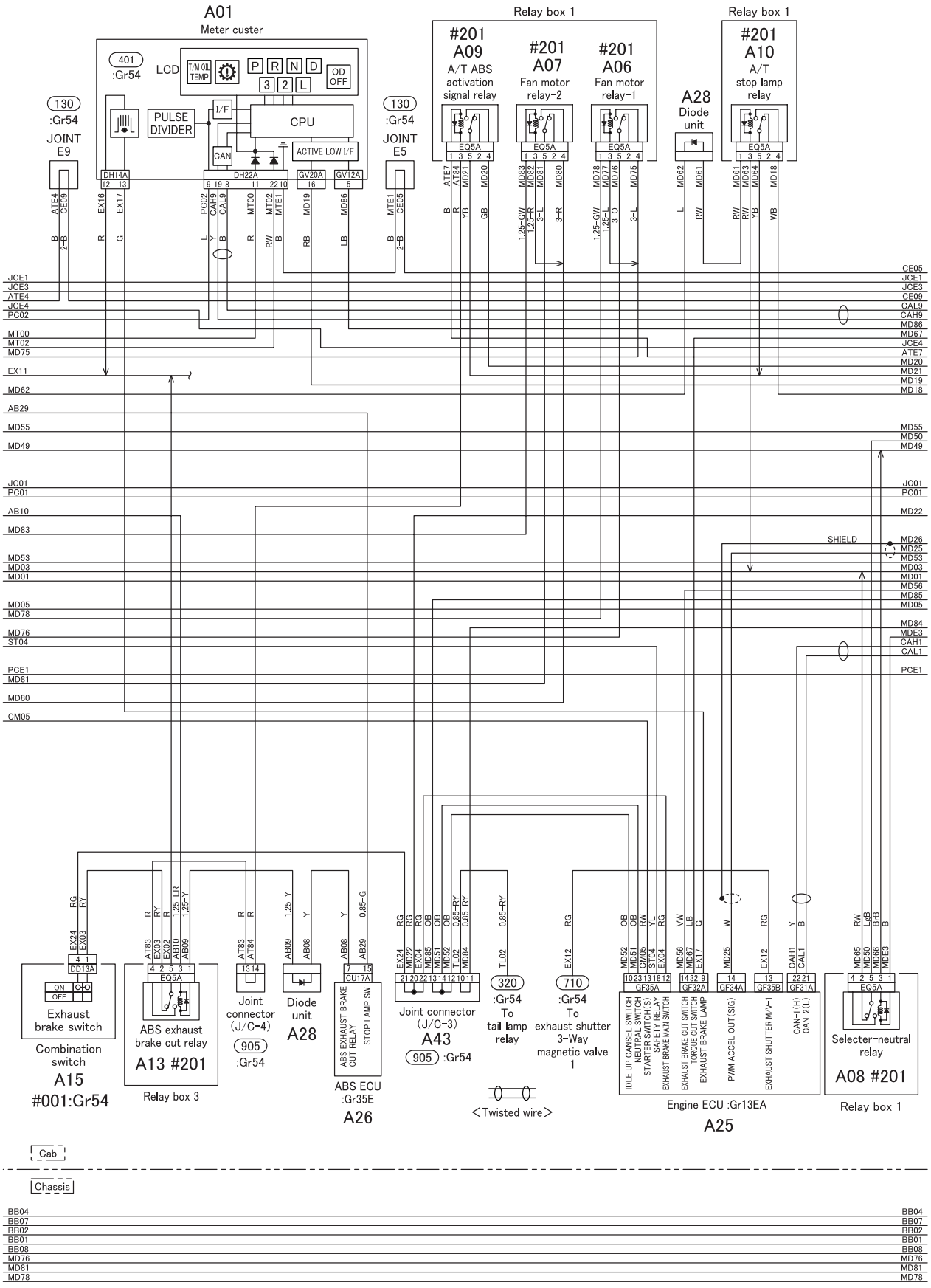
A01
Meter custer
401
:Gr54
LCD
T/M OIL TEMP
P R N D
3 2 L
OD OFF
I/F
CPU
PULSE DIVIDER
CAN
ACTIVE LOW I/F
DH14A
DH22A
GV20A
GV12A
130
:Gr54
JOINT E9
130
:Gr54
JOINT E5
Relay box 1
#201 A09
A/T ABS activation signal relay
#201 A07
Fan motor relay-2
#201 A06
Fan motor relay-1
A28
Diode unit
Relay box 1
#201 A10
A/T stop lamp relay
EQ5A
JCE1
JCE3
ATE4
JCE4
PC02
MT00
MT02
MD75
EX11
MD62
AB29
MD55
MD49
JC01
PC01
AB10
MD83
MD53
MD03
MD01
MD05
MD78
MD76
ST04
PCE1
MD81
MD80
CM05
CE05
CE09
CAL9
CAH9
MD86
MD67
MD20
MD21
MD19
MD18
MD50
MD22
SHIELD
MD26
MD25
MD56
MD85
MDE3
CAH1
CAL1
Exhaust brake switch
Combination switch
A15
#001:Gr54
ABS exhaust brake cut relay
A13 #201
Relay box 3
Joint connector (J/C-4)
905
:Gr54
Diode unit
A28
ABS EXHAUST BRAKE CUT RELAY
STOP LAMP SW
ABS ECU
:Gr35E
A26
Joint connector (J/C-3)
A43
905 :Gr54
320
:Gr54
To tail lamp relay
710
:Gr54
To exhaust shutter 3-Way magnetic valve 1
<Twisted wire>
IDLE UP CANSEL SWITCH
NEUTRAL SWITCH
STARTER RELAY (S)
SAFETY RELAY
EXHAUST BRAKE MAIN SWITCH
EXHAUST BRAKE CUT SWITCH
TORQUE CUT SWITCH
EXHAUST BRAKE LAMP
PWM ACCEL OUT (SIG)
EXHAUST SHUTTER M/V-I
CAN-I (H)
CAN-2 (L)
Engine ECU :Gr13EA
A25
Selecter-neutral relay
A08 #201
Relay box 1
Cab
Chassis
BB04
BB07
BB02
BB01
BB08
MD76
MD81
MD78

ELECTRICAL CIRCUIT DIAGRAM

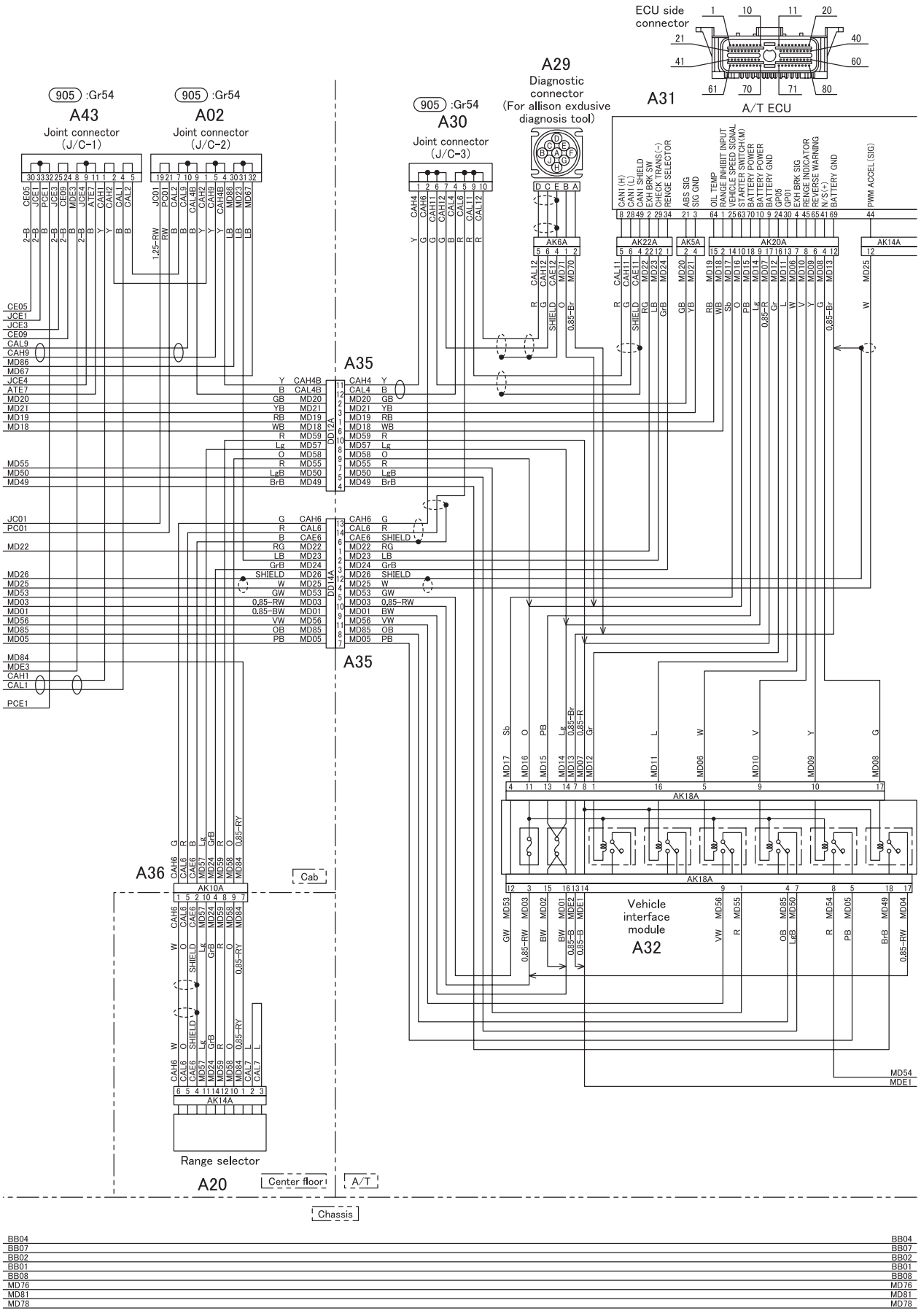

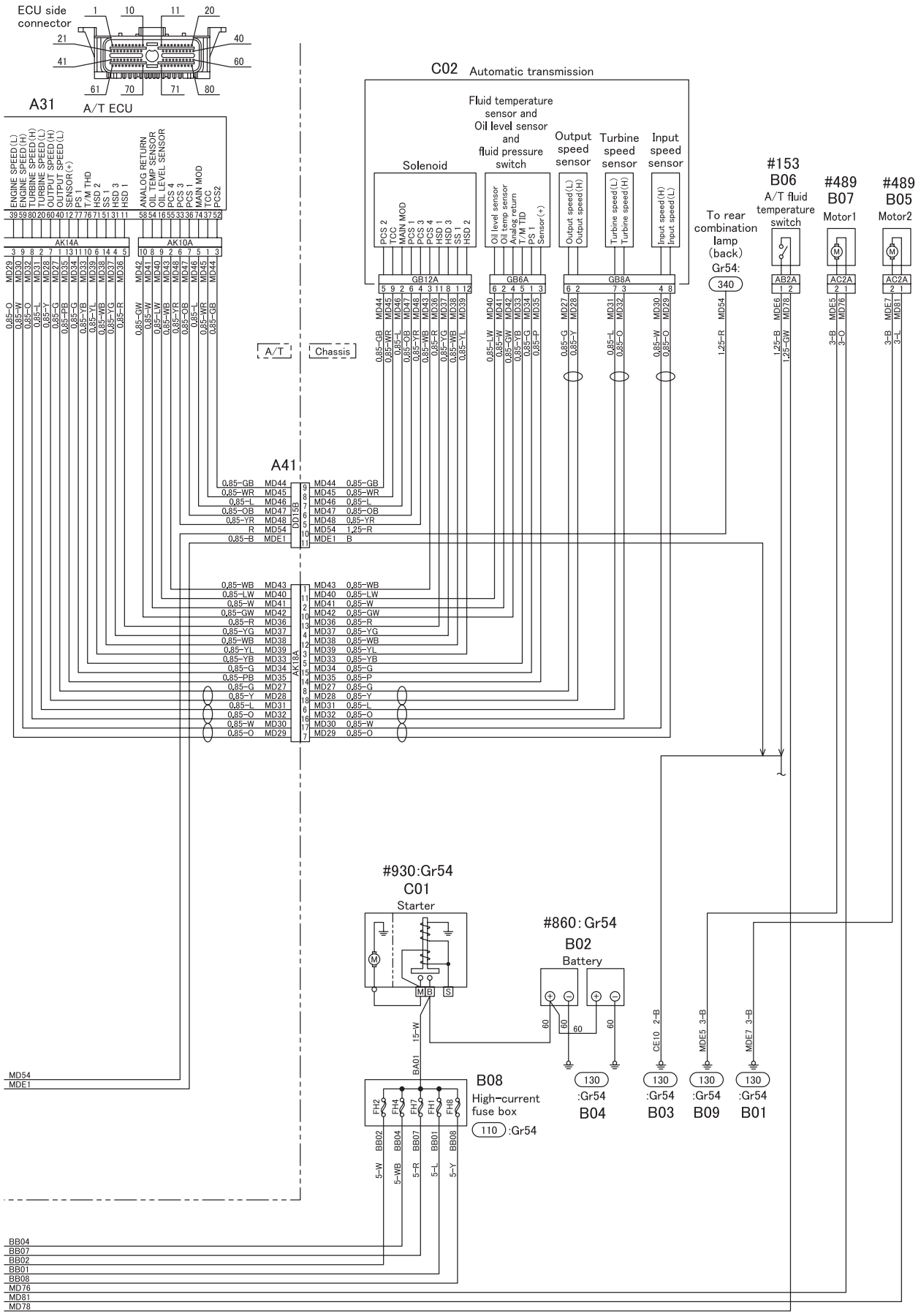
ECU side connector
A31
A/T ECU
C02 Automatic transmission
Fluid temperature sensor and Oil level sensor and fluid pressure switch
Solenoid
Output speed sensor
Turbine speed sensor
Input speed sensor
To rear combination lamp (back)
Gr54: 340
#153 B06 A/T fluid temperature switch
#489 B07 Motor1
#489 B05 Motor2
A41
A/T
Chassis
#930:Gr54 C01 Starter
#860:Gr54 B02 Battery
B08 High-current fuse box
110 :Gr54
130 :Gr54 B04
130 :Gr54 B03
130 :Gr54 B09
130 :Gr54 B01

Group 25

Propeller Shaft

Table of Contents

Back

Home

MITSUBISHI FUSO TRUCK OF AMERICA, Inc.

Pub.No.TWME0709-25

INDEX

SPECIFICATIONS 25-2

STRUCTURE AND OPERATION
1. Configuration of Propeller Shaft Connection 25-2
2. Propeller Shaft <Without Center Bearing> 25-3
3. Propeller Shaft <With Center Bearing> 25-3

TROUBLESHOOTING 25-4

REMOVAL AND INSTALLATION OF PROPELLER SHAFT 25-6

PROPELLER SHAFT
<P8> 25-8
<P10> 25-22

SPECIFICATIONS / STRUCTURE AND OPERATION

SPECIFICATIONS

Item	Specifications	
	FK	FM
Propeller shaft model	P8	P10

STRUCTURE AND OPERATION

1. Configuration of Propeller Shaft Connection

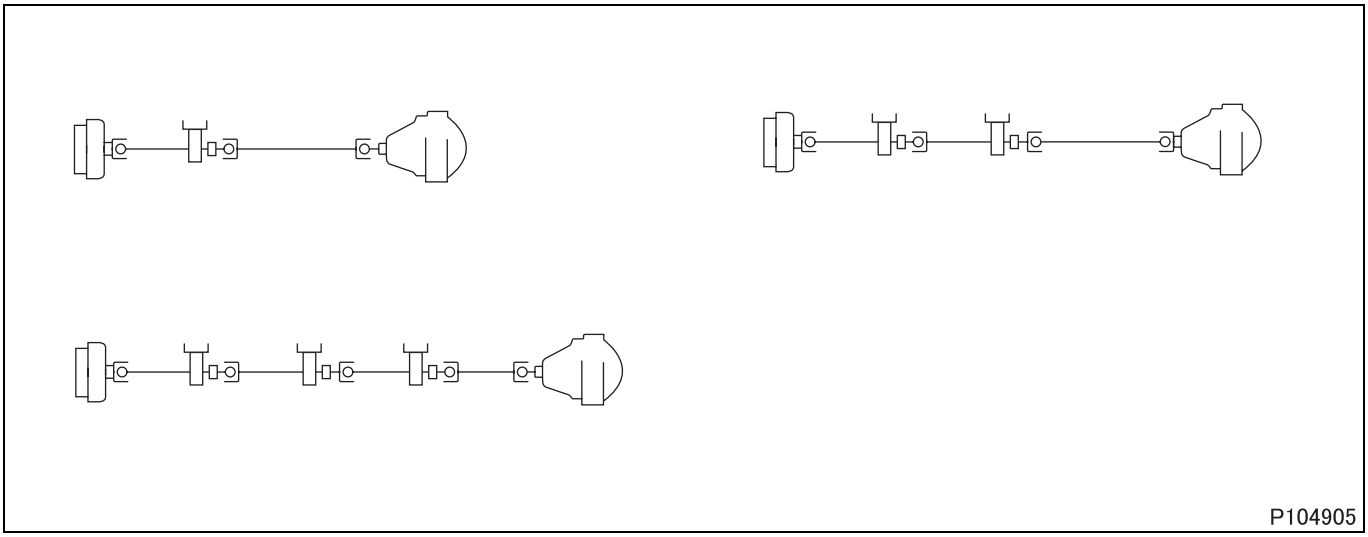

2. Propeller Shaft <Without Center Bearing>

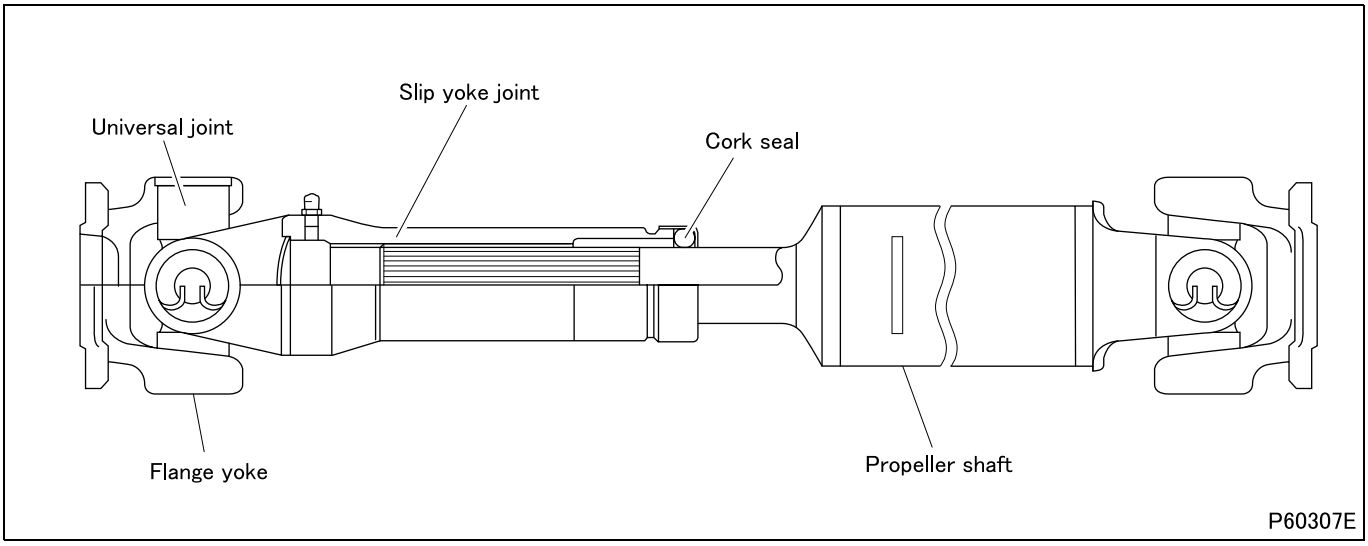

3. Propeller Shaft <With Center Bearing>

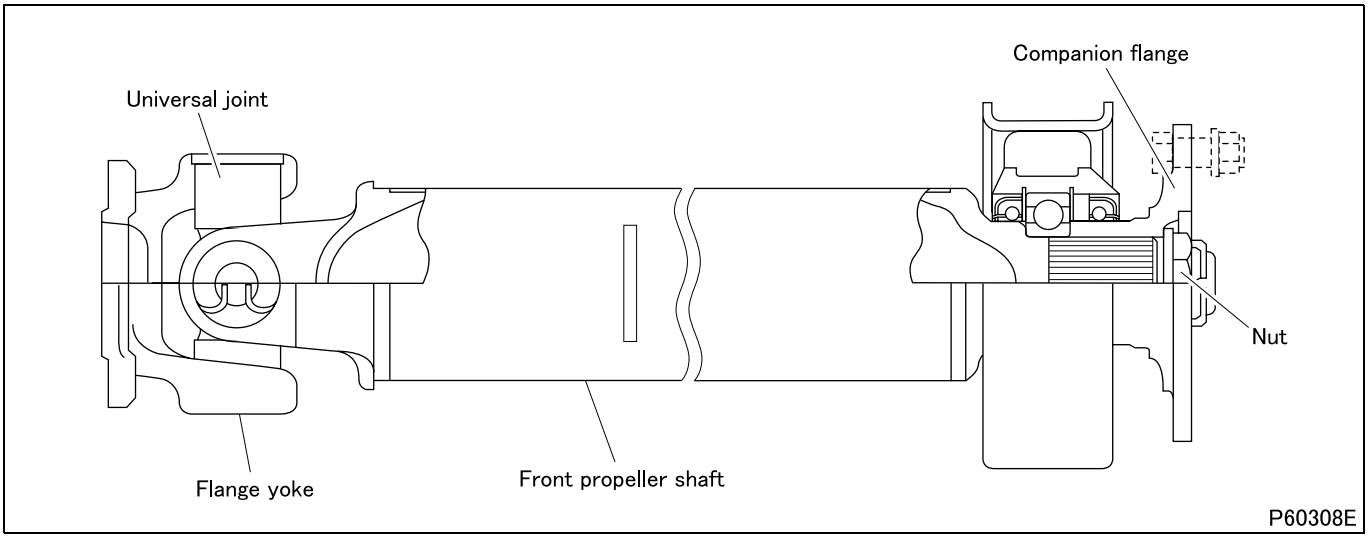

Symptoms / Possible causes		Propeller shaft vibrates		Abnormal noise from propeller shaft		
		Vibration at high speed	Vibration at low speed	Abnormal noise at acceleration from zero or at coasting	Abnormal noise at normal running	Clicking noise
Wrong combination of flange yoke directions		O				
Excessive torque upon companion flange tightening torque						O
Slip yoke joint	Insufficient grease				O	
	Excessive play at spline		O	O		
Universal joint	Excessive clearance in axial direction of spider shaft		O		O	
	Insufficient needle bearing greasing				O	
	Worn out needle bearing	O		O	O	
Center bearing	Insufficient grease				O	
	Seizure, wear or improper rotation	O			O	
	Deteriorated or deformed cushion rubber			O		
	Loose bracket mounting bolts			O		
Propeller shaft	Loose mounting bolts	O		O		
	Bent	O				
	Dynamic balance improper	O				
Transmission in high speed gear			O			

M E M O

REMOVAL AND INSTALLATION OF PROPELLER SHAFT

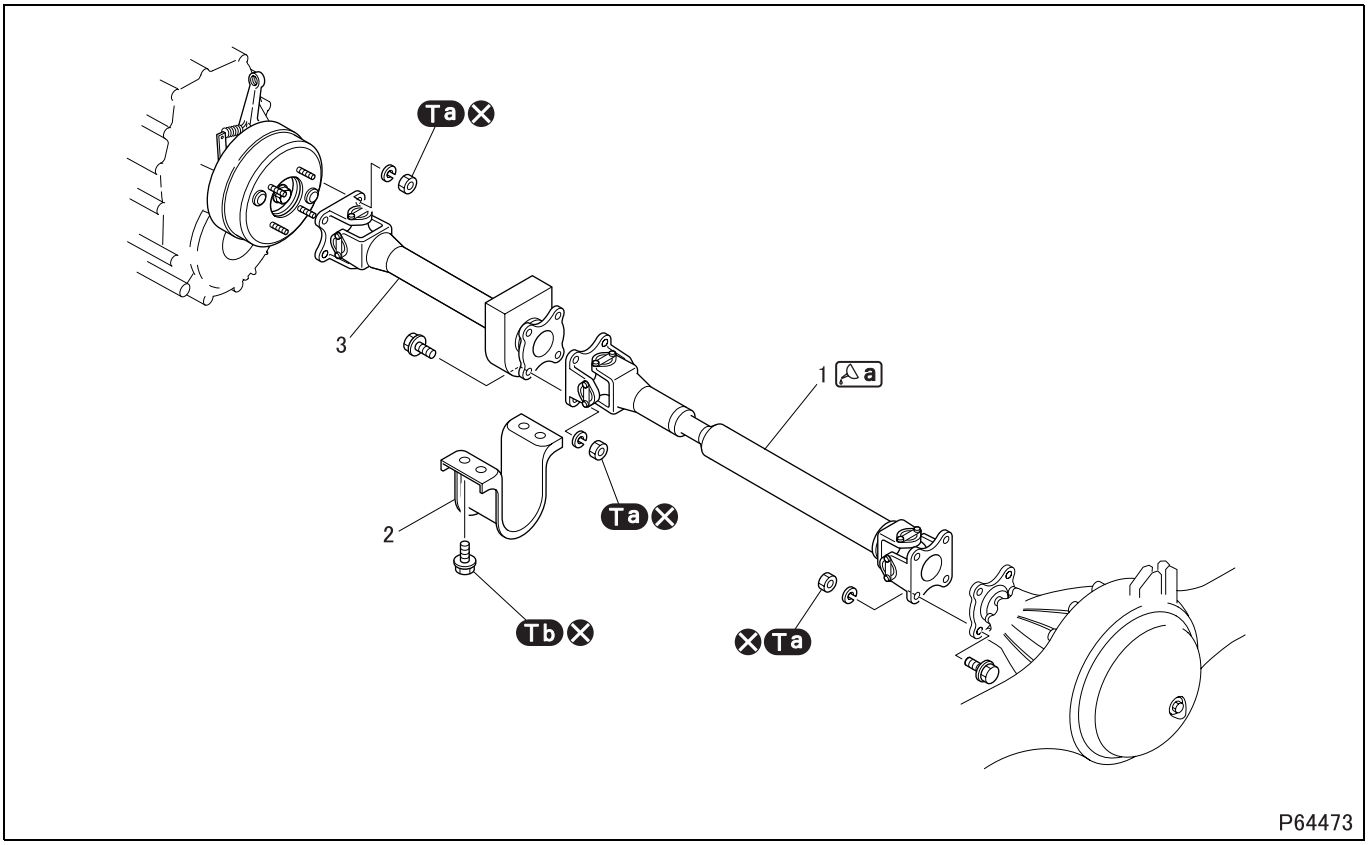

- Shown above is a tandem propeller shaft. The same service procedure applies to other propeller shafts.

● Removal sequence

1 Propeller shaft <Without center bearing> (See later section.)
2 Center bearing bracket
3 Propeller shaft <With center bearing> (See later section.)

⊗: Non-reusable parts

CAUTION ⚠

- **Securely chock the wheels so that the vehicle does not move.**
- **Do not remove the chocks until the entire operation is completed.**

● Installation sequence

Follow the removal sequence in reverse.

Tightening torque (Unit: N·m {ft.lbs, kgf·m})

Mark	Parts to be tightened		Tightening torque	Remarks
Ta	Nut (propeller shaft mounting)	P8	70 to 100 {51 to 72, 7 to 10}	–
		P10	120 to 180 {87 to 130, 12 to 18}	–
Tb	Bolt (center bearing bracket mounting)		70 to 95 {51 to 69, 7.0 to 9.5}	–

Lubricant and/or sealant

Mark	Points of application	Specified lubricant and/or sealant	Quantity
a	Supply through grease nipple of propeller shaft	Wheel bearing grease [NLGI No. 2 (Li soap)]	As required

◆Work before removal◆

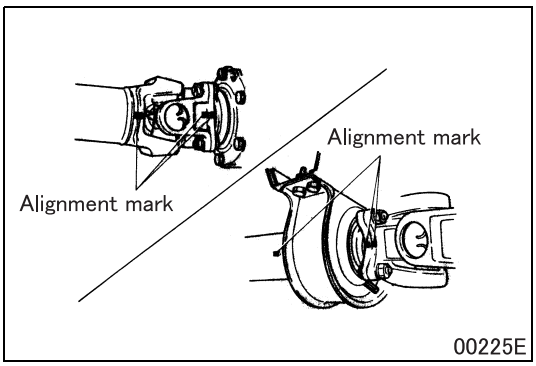

■ **Alignment mark: Propeller shaft**

- Be sure to make alignment marks before removal.

◆Work after installation◆

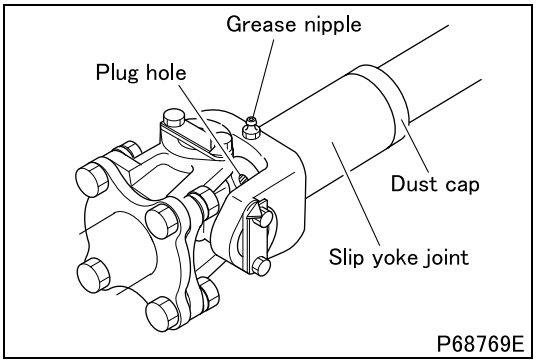

■ **Lubrication: Propeller shaft <Without center bearing>**

- Fill grease through the grease nipple, with the plug hole in the slip yoke joint stopped, until supplied grease overflows from the dust cap side.

PROPELLER SHAFT <P8>

<Without center bearing>

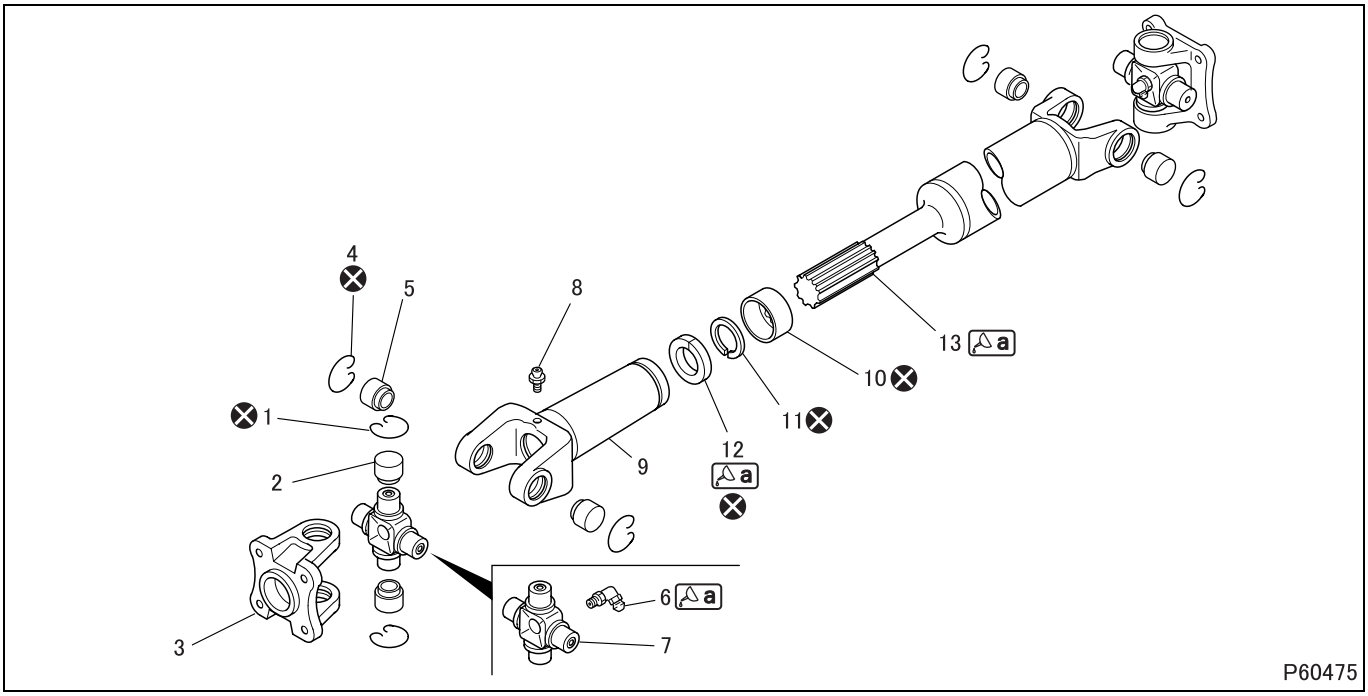

- Balance piece installing position (at flange yoke, slip yoke joint or propeller shaft) depends on the unbalance of the propeller shaft. This illustration is an example.

● Disassembly sequence

1 Snap ring
2 Needle bearing
3 Flange yoke
4 Snap ring
5 Needle bearing
6 Grease nipple
7 Spider
8 Grease nipple
9 Slip yoke joint
10 Dust cap
11 Retainer
12 Cork seal
13 Propeller shaft

⊗: Non-reusable parts

CAUTION ⚠

- **Be careful not to damage the needle bearing because it is fitted with a seal.**

● Assembly sequence

Follow the disassembly sequence in reverse, excepting:
13→10→11→12→9

Repair kit: Universal joint spider kit

CAUTION ⚠

- **Be sure to reinstall removed parts at their original positions.**
- **Correct dynamic balance after replacement of parts.**

- Fill grease through the grease nipple of the slip yoke joint after mounting the propeller shaft to the vehicle. (See REMOVAL AND INSTALLATION OF PROPELLER SHAFT.)

Service standards (Unit: mm {in.})

Location	Maintenance item	Standard value	Limit	Remedy
–	Axial clearance of spider	0 to 0.15 {0 to 0.0059}	–	Adjust
–	Permissible amount of unbalance of propeller shaft (Periphery of pipe)	0.49 N·cm {0.0036 ft.lbs, 50 gf·cm} max./1600 rpm	–	Adjust
2, 3	Clearance between needle bearing and flange yoke ("–" indicates interference.)	–0.031 to 0.010 {–0.0012 to 0.00039}	0.1 {0.0039}	Replace
2, 5, 7	Clearance between needle bearing and spider	0.02 to 0.07 {0.00079 to 0.0028}	0.2 {0.00079}	Replace
5, 9	Clearance between needle bearing and slip yoke joint ("–" indicates interference.)	–0.031 to 0.010 {–0.0012 to 0.00039}	0.1 {0.0039}	Replace
9, 13	Play in rotation direction between slip yoke joint and propeller shaft spline	0.07 to 0.18 {0.0028 to 0.0071}	0.3 {0.012}	Replace
13	Bend of propeller shaft	0 to 0.6 {0 to 0.024}	–	Correct or replace

Lubricant and/or sealant

Mark	Points of application	Specified lubricant and/or sealant	Quantity
a	Supply through grease nipple	Wheel bearing grease [NLGI No. 2 (Li soap)]	As required
	Inner periphery of cork seal		
	Propeller shaft spline		

Special tools

Mark	Tool name and shape	Part No.	Application
a	Snap ring repressor 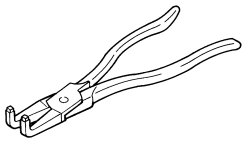 00227	MH061001	Removal and installation of snap ring

◆Work before removal◆

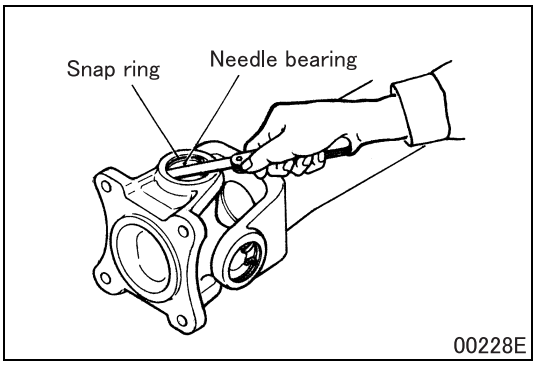

■ Inspection: Axial clearance of spider

- Press strongly down the needle bearing, and measure clearance between the snap ring and needle bearing.
- If the measurement exceeds the standard value, change snap ring thickness for adjustment.

Variation of snap ring:

Thickness	Identification color
3 mm {0.118 in.}	Green
3.05 mm {0.120 in.}	White
3.1 mm {0.122 in.}	Red
3.15 mm {0.124 in.}	Blue
3.2 mm {0.126 in.}	Yellow

NOTE

- **Use snap rings for both ends with the same thickness as much as possible to ensure rotation balance.**

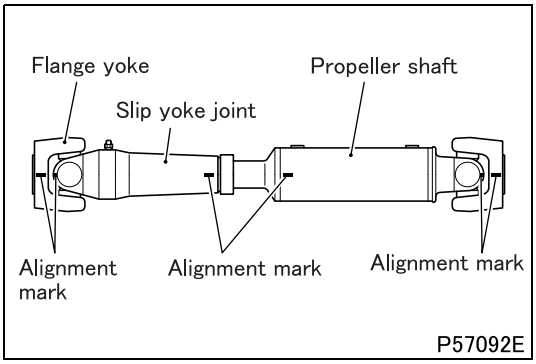

■ **Alignment mark: Propeller shaft**

- To prevent assembly of wrong parts, make alignment marks on flange yoke, slip yoke joint and propeller shaft.

◆Removal procedure◆

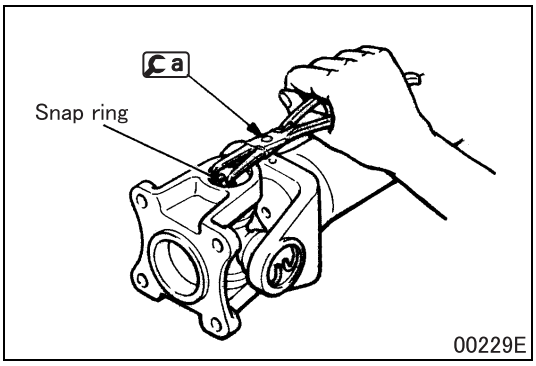

■ **Removal: Snap ring**

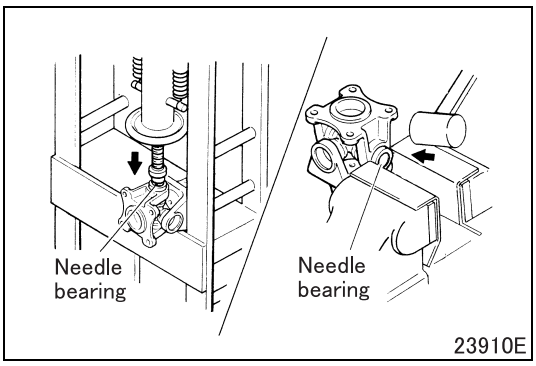

■ **Removal: Needle bearing**

- Make alignment marks on the needle bearing and spider.
- Force out the needle bearing halfway from the yoke using a press, then remove it with a vise.

◆Inspection procedure◆

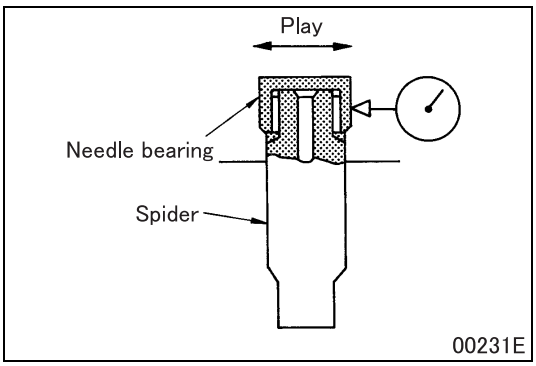

■ **Inspection: Clearance between needle bearing and spider**

- If the measurement exceeds the limit, replace with the universal joint spider kit.

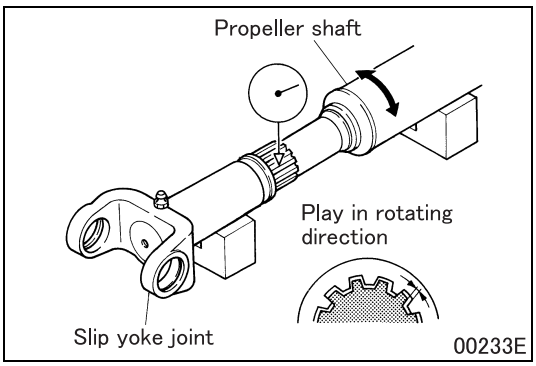

■ **Inspection: Play in rotation direction between slip yoke joint and propeller shaft spline**

- If the measurement exceeds the limit, replace the slip yoke joint and propeller shaft in a set.

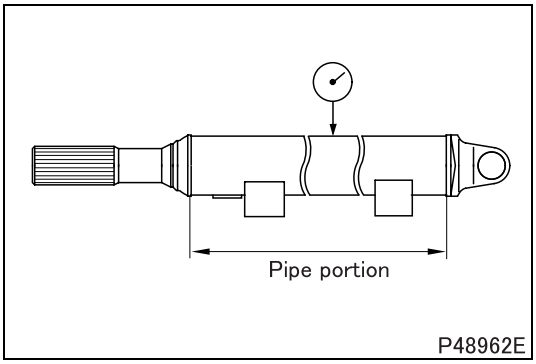

■ **Inspection: Bend of propeller shaft**

- Before measuring the bend of pipe, remove paint from the propeller shaft where the dial gauge is set and the pipe is supported with V blocks using a paint remover.
- Measure bend of propeller shaft at the center of its pipe portion.
- To measure the bend of propeller shaft, turn it fully once and read the dial gauge indicator. The bend is one half of the indicated value.
- If the measurement deviates from the standard value, correct the bend with a press or replace the propeller shaft.

CAUTION ⚠

- **Remove paint taking care not to damage the pipe portion of the shaft.**
- **Check the propeller shaft for cracks in the welded area after correcting the bend using a press. If a crack is caused, replace the propeller shaft instead of correcting it by welding.**

◆Installation procedure◆

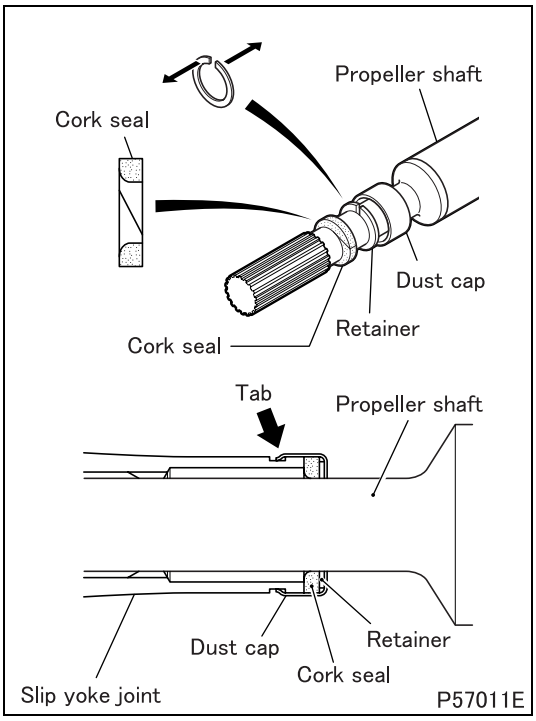

■ **Installation: Dust cap, retainer and cork seal**

- After inserting the dust cap into the propeller shaft, carefully open the retainer right and left, assemble it to the propeller shaft and return it to the original condition.
- Apply grease to the inside circumference of the cork seal and assemble it to the propeller shaft, facing it in the illustrated direction in the same method as the retainer.
- Apply sufficient grease to the splined portion of the propeller shaft, then fit the propeller shaft into the slip yoke joint.
- Press the dust cap against the slip yoke joint in such a way that the cork seal is compressed, and crimp its tabs to engage with the recesses in the slip yoke joint.

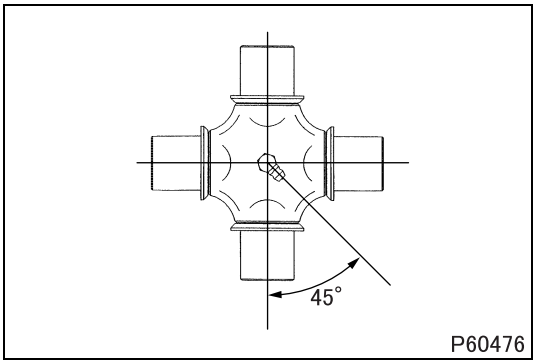

■ **Installation: Spider**

- Fit grease nipple to the spider facing it in the illustrated direction.

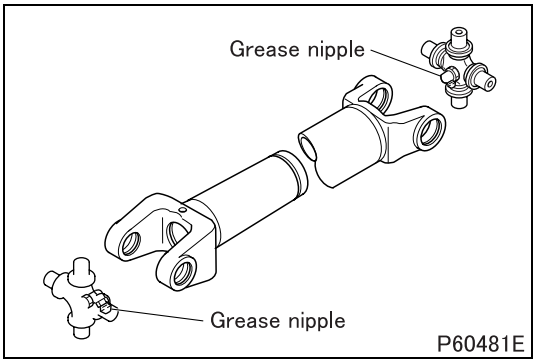

- Install spiders on both ends of the propeller shaft so that their respective grease nipple faces in the same direction.

■ **Installation: Snap ring**

- Install the snap ring by following the removal sequence in reverse.
  (See **"■ Removal: Snap ring"**.)

◆Work after installation◆

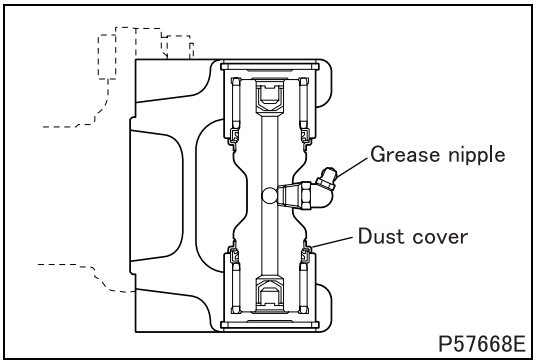

■ **Lubrication: Grease nipple**

- Fill grease through the grease nipple until supplied grease overflows from four dust covers of the spider.
- If grease does not overflow from all of the four dust covers or rust, water and dirt come out with grease, replace the spider with the spider kit.

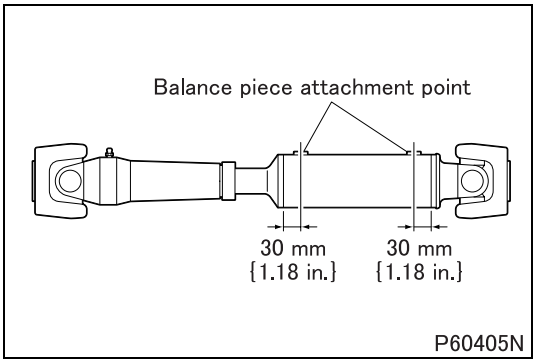

■ **Inspection: Permissible unbalance amount of propeller shaft**

[Inspection]

- Measure the balance amount (dynamic balance) of the propeller shaft on a balancing machine.
- If the measurement deviates from the standard value, adjust the balance amount in the following procedure.

[Adjustment]

- Attach appropriate balance pieces and lock plate to the illustrated points so that the unbalance amount comes within the standard value.
- Maximum balance piece allowance for one point is 120 g {4.23 oz}.
- Use a combination that keeps the number of balance pieces to a minimum.

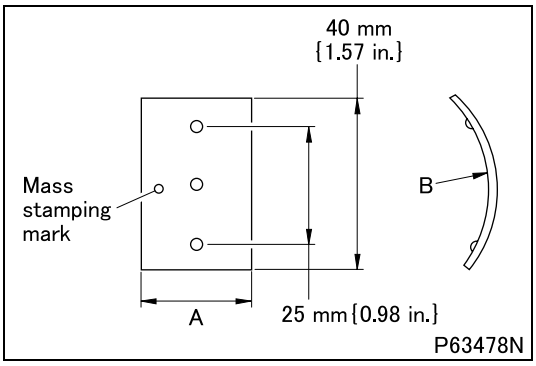

Types of balance pieces

Mass	Dimension A	Radius B of the bend	Thickness
10 g {0.35 oz}	14 mm {0.55 in.}	41.3 mm {1.63 in.}	2.3 mm {0.091 in.}
20 g {0.71 oz}	28 mm {1.10 in.}	45 mm {1.77 in.}	
40 g {1.41 oz}	55.7 mm {2.19 in.}		
60 g {2.12 oz}	83.5 mm {3.29 in.}		

PROPELLER SHAFT <P8>

<With center bearing>

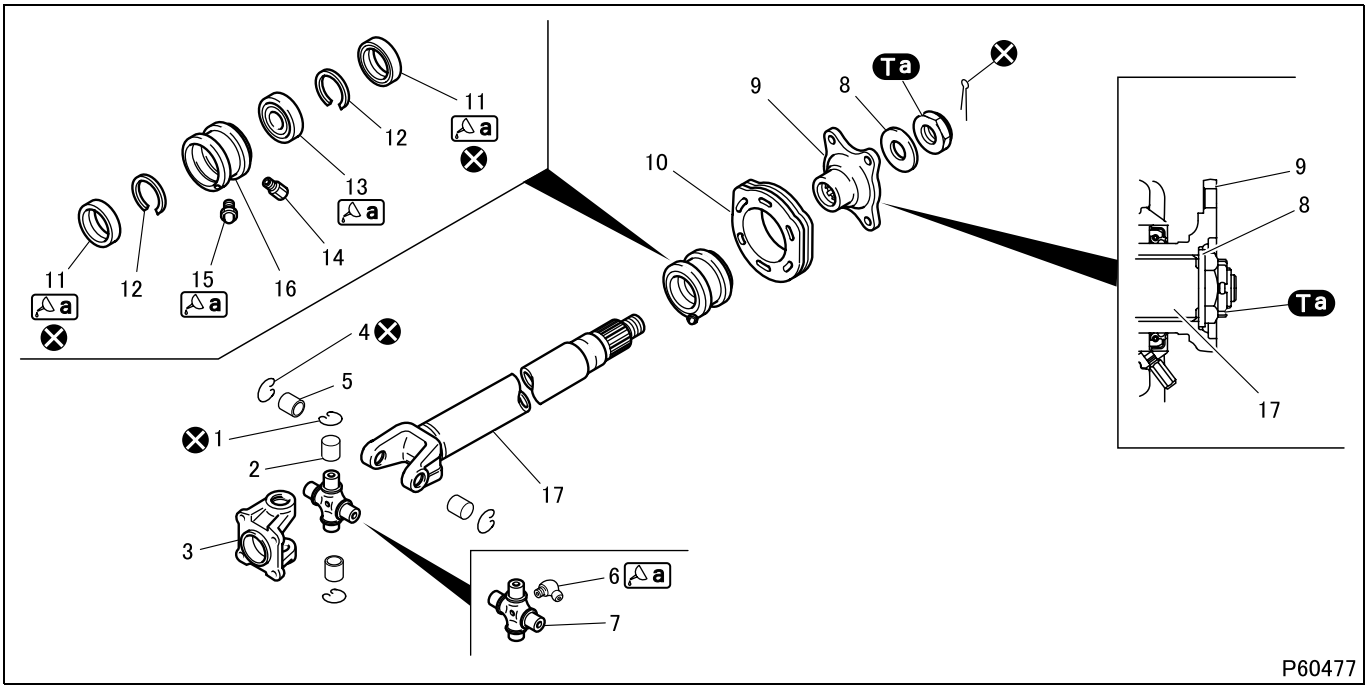

● Disassembly sequence

1 Snap ring
2 Needle bearing
3 Flange yoke
4 Snap ring
5 Needle bearing
6 Grease nipple
7 Spider
8 Washer
9 Companion flange
10 Cushion rubber
11 Oil seal
12 Snap ring
13 Center bearing
14 Relief valve
15 Grease nipple
16 Center bearing case
17 Propeller shaft

⊗: Non-reusable parts

CAUTION ⚠

- **Be careful not to damage the needle bearing because it is fitted with a seal.**

● Assembly sequence

Follow the disassembly sequence in reverse.

Repair kit: Universal joint spider kit

CAUTION ⚠

- **Be sure to reinstall removed parts at their original positions.**
- **Correct dynamic balance after replacement of parts.**

Service standards (Unit: mm {in.})

Location	Maintenance item	Standard value	Limit	Remedy
–	Axial clearance of spider	0 to 0.15 {0 to 0.0059}	–	Adjust
–	Permissible amount of unbalance of propeller shaft (periphery of pipe)	0.49 N·cm {0.0036 ft.lbs, 50 gf·cm} max./1600 rpm	–	Adjust
2, 3	Clearance between needle bearing and flange yoke (“–” indicates interference.)	–0.031 to 0.010 {–0.0012 to 0.00039}	0.1 {0.0039}	Replace
2, 5, 7	Clearance between needle bearing and spider	0.02 to 0.07 {0.00079 to 0.0028}	0.2 {0.0079}	Replace
5, 17	Clearance between needle bearing propeller shaft (“–” indicates interference.)	–0.031 to 0.010 {–0.0012 to 0.00039}	0.1 {0.0039}	Replace
17	Bend of propeller shaft	0 to 0.6 {0 to 0.024}	–	Correct or replace

Tightening torque (Unit: N·m {ft.lbs, kgf·m})

Mark	Parts to be tightened	Tightening torque	Remarks
Ta	Nut (companion flange mounting)	540 to 740 {395 to 540, 55 to 75}	–

Lubricant and/or sealant

Mark	Points of application	Specified lubricant and/or sealant	Quantity
a	Supply through grease nipple	Wheel bearing grease [NLGI No. 2 (Li soap)]	As required
	Oil seal lips		
	Fill the area between balls of center bearing		

Special tools (Unit: mm {in.})

Mark	Tool name and shape	Part No.	Application
a	Snap ring repressor 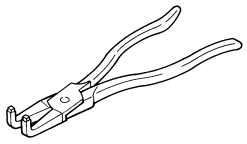 00227	MH061001	Removal and installation of snap ring
b	Socket wrench 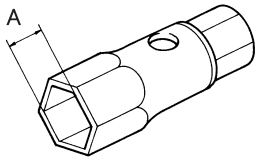 00561	44490-44101	Removal and installation of companion flange mounting nut (commercially available equivalent can be used)
c	Gear puller 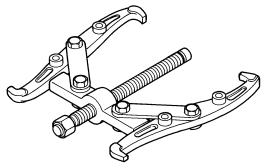 00553	MH061102	Removal of center bearing

A
50 {1.97}

◆Work before removal◆

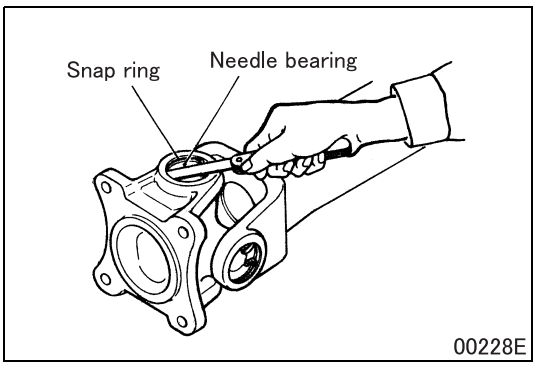

■ **Inspection: Axial clearance of spider**

- Press strongly down the needle bearing, and measure clearance between the snap ring and needle bearing.
- If the measurement exceeds the standard value, change snap ring thickness for adjustment.

Variation of snap ring:

Thickness	Identification color
3 mm {0.118 in.}	Green
3.05 mm {0.120 in.}	White
3.1 mm {0.122 in.}	Red
3.15 mm {0.124 in.}	Blue
3.2 mm {0.126 in.}	Yellow

NOTE

- **Use snap rings for both ends with the same thickness as much as possible to ensure rotation balance.**

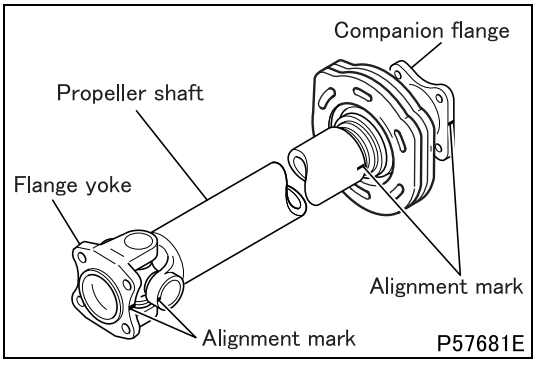

■ **Alignment mark: Propeller shaft**

- To prevent assembly of wrong parts, make alignment marks on flange yoke, companion flange and propeller shaft.

◆Removal procedure◆

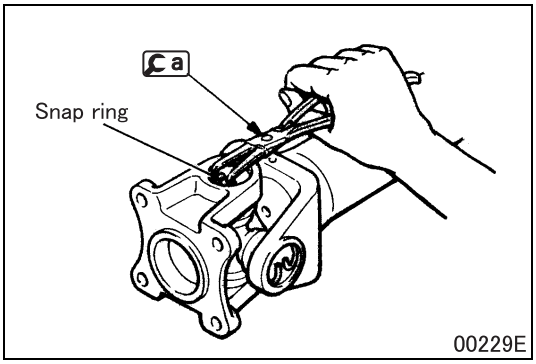

■ **Removal: Snap ring**

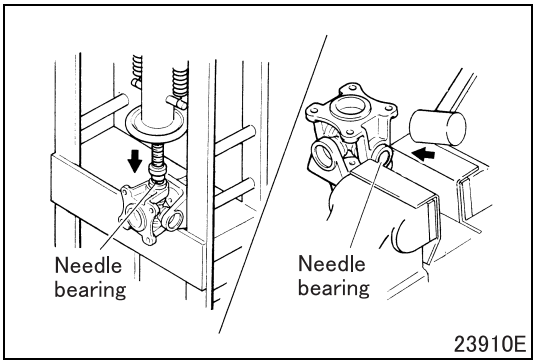

■ **Removal: Needle bearing**

- Make alignment marks on the needle bearing and spider.
- Force out the needle bearing halfway from the yoke using a press, then remove it with a vise.

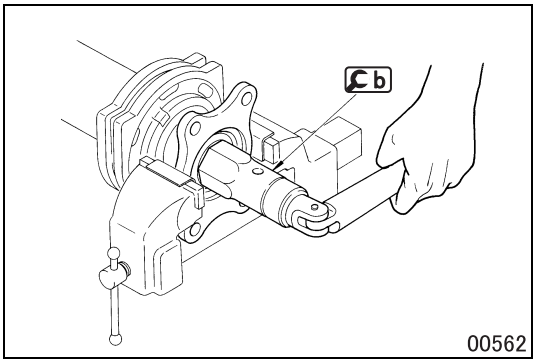

■ **Removal: Companion flange**

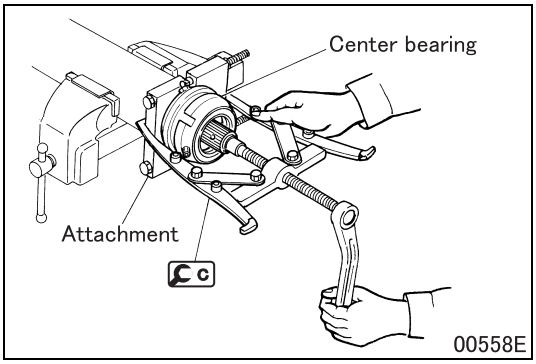

■ **Removal: Center bearing**

- Using c, remove the center bearing with the aid of the attachment.

◆Inspection procedure◆

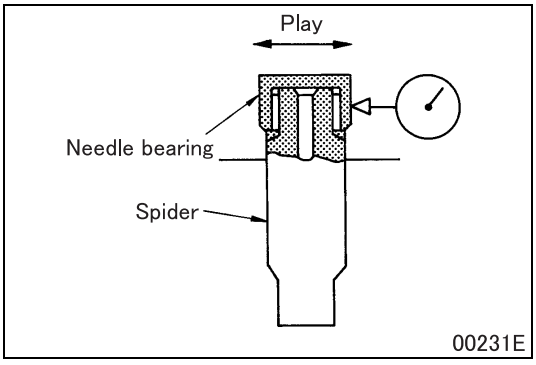

■ **Inspection: Clearance between needle bearing and spider**

- If the measurement is higher than the limit, replace with the universal joint spider kit.

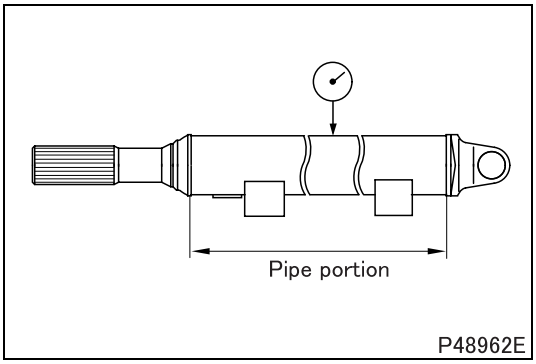

■ **Inspection: Bend of propeller shaft**

- Before measuring the bend of pipe, remove paint from the propeller shaft where the dial gauge is set and the pipe is supported with V blocks using a paint remover.
- Measure bend of propeller shaft at the center of its pipe portion.
- To measure the bend of propeller shaft, turn it fully once and read the dial gauge indicator. The bend is one half of the indicated value.
- If the measurement deviates from the standard value, correct the bend with a press or replace the propeller shaft.

CAUTION ⚠

- **Remove paint using care not to damage the pipe portion of the shaft.**
- **Check the propeller shaft for cracks in the welded area after correcting the bend using a press. If a crack is caused, replace the propeller shaft instead of correcting it by welding.**

◆Installation procedure◆

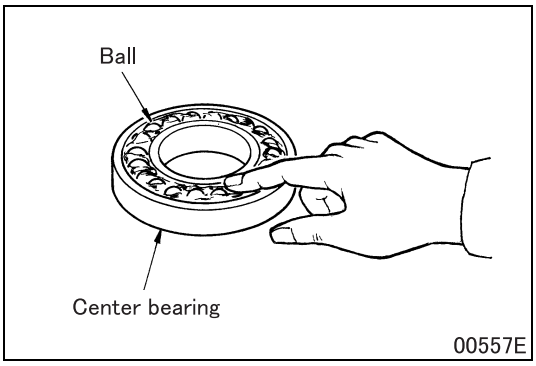

■ **Installation: Center bearing**

- Fill space between balls of the center bearing with grease.

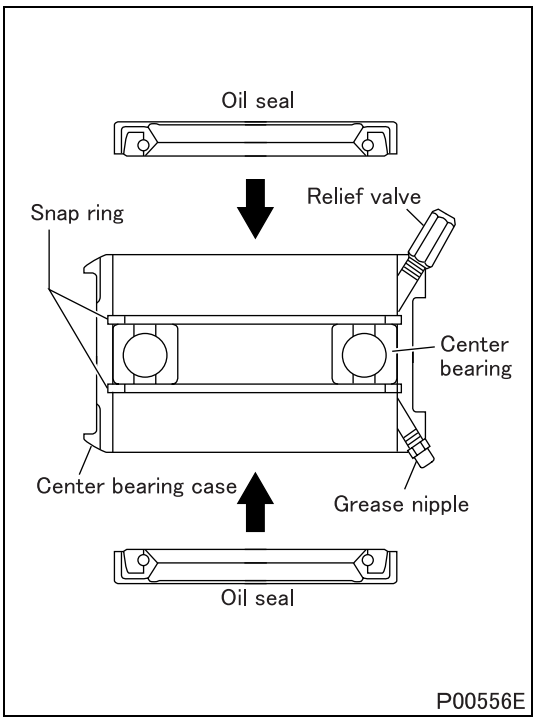

■ **Installation: Oil seal**

- Apply grease to the oil seal lip.
- Install the oil seal in the illustrated direction, aligning it with the end face of the center bearing case.

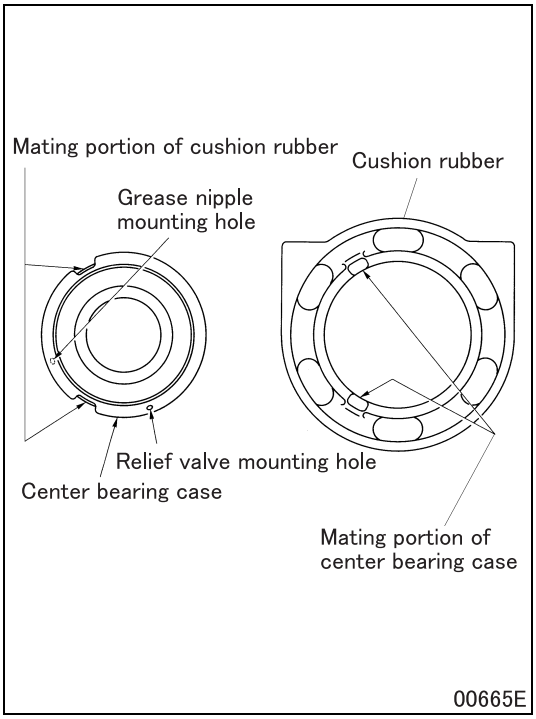

■**Installation: Cushion rubber**

- Fit the illustrated portion of the cushion rubber in the illustrated portion of the center bearing case by aligning them. If it is difficult to fit it in, apply soapy water for smooth fitting.

CAUTION ⚠

- **Grease deteriorates cushion rubber. Be sure to use soapy water.**

- Assemble the cushion rubber so that grease nipple mounting holes face downward.

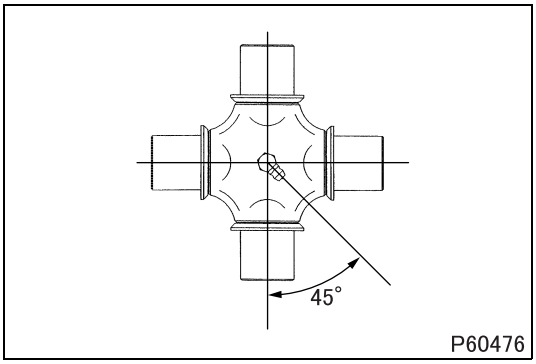

■ **Installation: Grease nipple**

- Fit grease nipple to the spider facing it in the illustrated direction.

■ **Installation: Snap ring**

- Install the snap ring by following the removal sequence in reverse.
  (See **"■ Removal: Snap ring"**.)

◆Work after installation◆

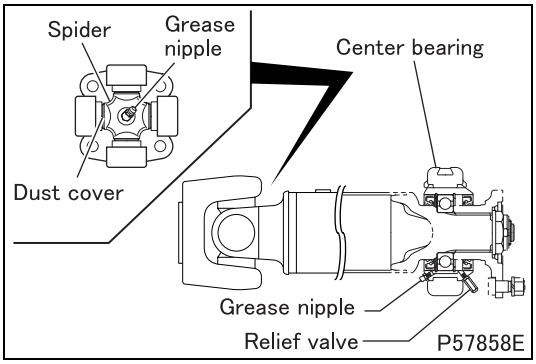

■ **Lubrication: Grease nipple**

- Fill grease through the grease nipple until supplied grease overflows from four dust covers of the spider.
- If grease does not overflow from all of the four dust covers or rust, water and dirt come out with grease, replace the spider with the spider kit.
- Fill grease through the grease nipple until supplied grease overflows from the relief valve of the center bearing.

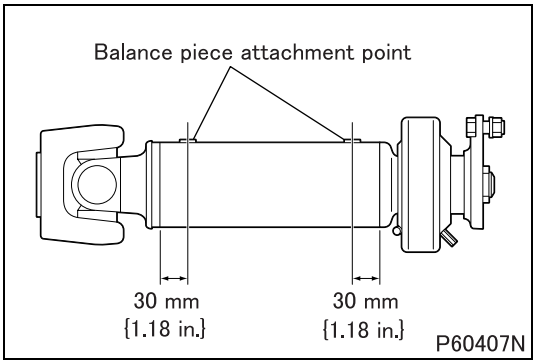

■**Inspection: Permissible unbalance amount of propeller shaft**

[Inspection]

- Measure the balance amount (dynamic balance) of the propeller shaft on a balancing machine.
- If the measurement deviates from the standard value, adjust the balance amount in the following procedure.

[Adjustment]

- Attach appropriate balance pieces and lock plate to the illustrated points so that the unbalance amount comes within the standard value.
- Maximum balance piece allowance for one point is 120 g {4.23 oz}.
- Use a combination that keeps the number of balance pieces to a minimum.

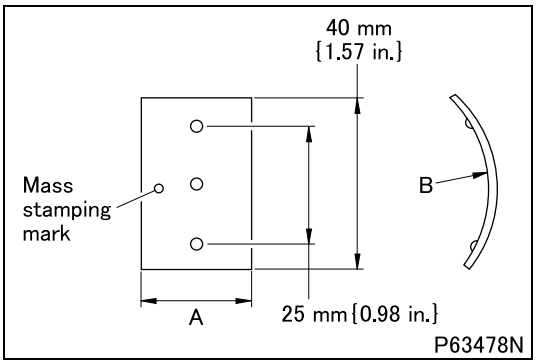

Types of balance pieces

Mass	Dimension A	Radius B of the bend	Thickness
10 g {0.35 oz}	14 mm {0.55 in.}	41.3 mm {1.63 in.]	2.3 mm {0.091 in.}
20 g {0.71 oz}	28 mm {1.10 in.}	45 mm {1.77 in.}	
40 g {1.41 oz}	55.7 mm {2.19 in.}		
60 g {2.12 oz}	83.5 mm {3.29 in.}		

M E M O

PROPELLER SHAFT <P10>

<Without center bearing>

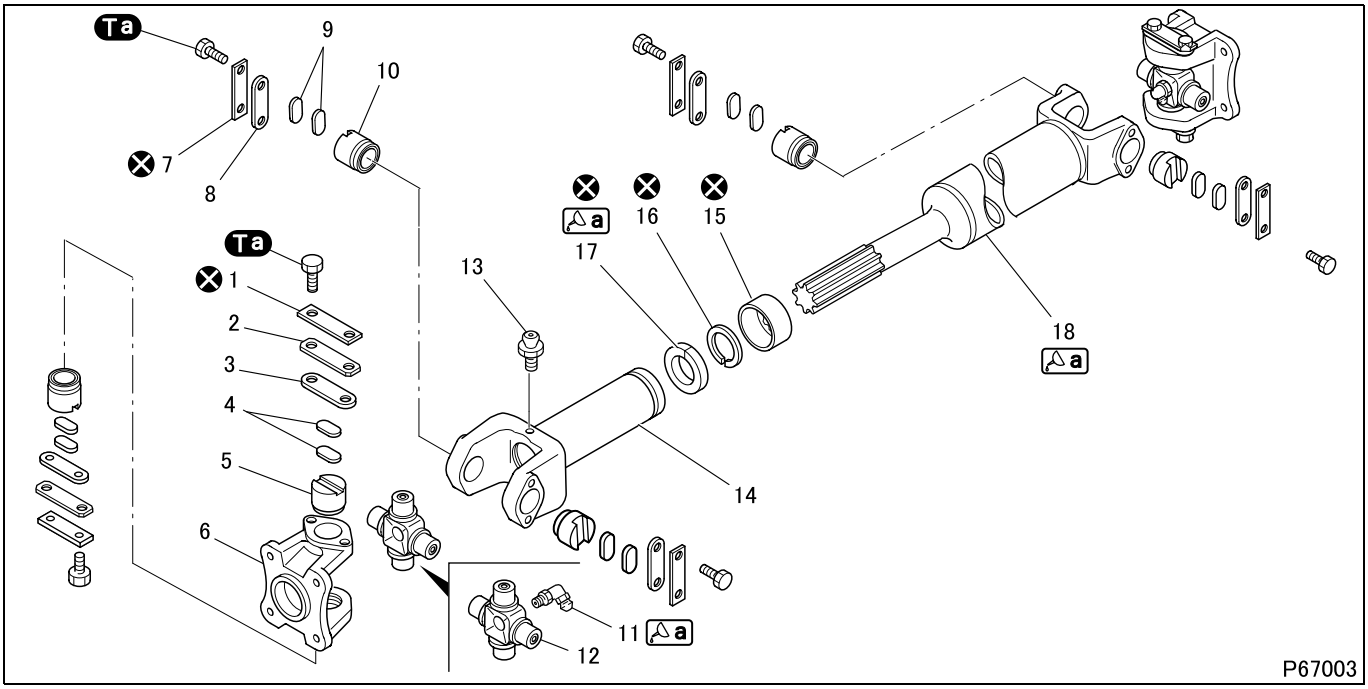

- Balance piece installing position (at flange yoke, slip yoke joint or propeller shaft) depends on the unbalance of the propeller shaft. This illustration is an example.

● Disassembly sequence

1 Lock plate
2 Balance piece
3 Bearing case retainer
4 Shim
5 Needle bearing
6 Flange yoke
7 Lock plate
8 Bearing case retainer
9 Shim
10 Needle bearing
11 Grease nipple
12 Spider
13 Grease nipple
14 Slip yoke joint
15 Dust cap
16 Retainer
17 Cork seal
18 Propeller shaft

⊗: Non-reusable parts

CAUTION ⚠

- **Be careful not to damage the needle bearing because it is fitted with a seal.**

● Assembly sequence

Follow the disassembly sequence in reverse, excepting:
18→15→16→17→14
Repair kit: Universal joint spider kit

CAUTION ⚠

- **Be sure to reinstall removed parts at their original positions.**
- **Correct dynamic balance after replacement of parts.**

- Fill grease through the grease nipple of the slip yoke joint after mounting the propeller shaft to the vehicle. (See REMOVAL AND INSTALLATION OF PROPELLER SHAFT.)

Service standards (Unit: mm {in.})

Location	Maintenance item	Standard value	Limit	Remedy
–	Axial clearance of spider	0 to 0.15 {0 to 0.0059}	–	Adjust
–	Permissible amount of unbalance of propeller shaft (periphery of pipe)	0.49 N·cm {0.0036 ft.lbs, 50 gf·cm} max./1600 rpm	–	Adjust
5, 6	Clearance between needle bearing and flange yoke ("–" indicates interference.)	–0.011 to 0.030 {–0.00043 to 0.0012}	0.1 {0.0039}	Replace
5, 10	Clearance between needle bearing and spider	0.023 to 0.07 {0.00091 to 0.0028}	0.2 {0.0079}	Replace
10, 14	Clearance between needle bearing and slip yoke joint ("–" indicates interference.)	–0.011 to 0.030 {–0.00043 to 0.0012}	0.1 {0.0039}	Replace
14, 18	Play in rotation direction between slip yoke joint and propeller shaft spline	0.07 to 0.18 {0.0028 to 0.0071}	0.3 {0.012}	Replace
18	Bend of propeller shaft	0 to 0.6 {0 to 0.024}	–	Correct or replace

Tightening torque (Unit: N·m {ft.lbs, kgf·m})

Mark	Parts to be tightened	Tightening torque	Remarks
Ta	Bolt (needle bearing mounting)	18 to 26 {13 to 20, 1.8 to 2.7}	–

Lubricant and/or sealant

Mark	Points of application	Specified lubricant and/or sealant	Quantity
△a	Supply through grease nipple	Wheel bearing grease [NLGI No. 2 (Li soap)]	As required
	Inner periphery of cork seal		
	Propeller shaft spline		

Special tools (Unit: mm {in.})

Mark	Tool name and shape	Part No.	Application
Ca	Spider rest A: ϕ43 {1.69}, B: 5 {0.20}, C: ϕ70 {2.76} 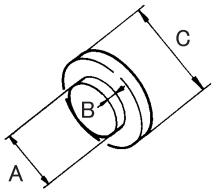 00437	03724-13000	Press-fitting of needle bearing
Cb	Spider rest 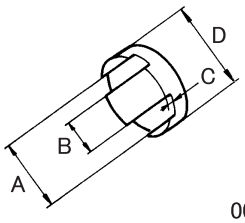 00443 A: 54 {2.13}, B: 22 {0.87}, C: 5 {0.20}, D: ϕ70 {2.76}	03724-14000	Press-fitting of needle bearing

◆Work before removal◆

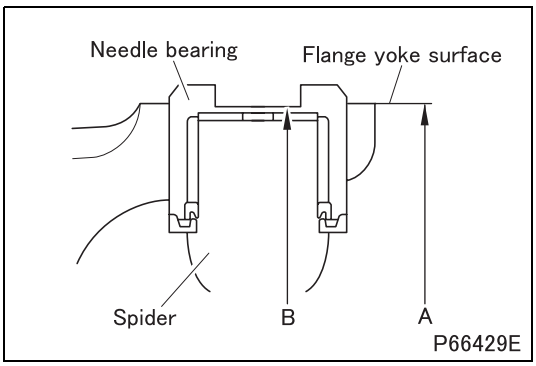

■ **Inspection: Axial clearance of spider**

- Measure the clearance of needle bearing (shim adjusting allowance= A – B).
- If the measurement exceeds the standard value, adjust the clearance by changing thickness of the shim.
  Types of shim: 0.1 mm {0.0039 in.}, 0.2 mm {0.0079 in.}

NOTE

- **Never allow the shim to protrude from the flange yoke surface.**
- **Use shims for both ends with the same thickness as much as possible to ensure rotation balance.**

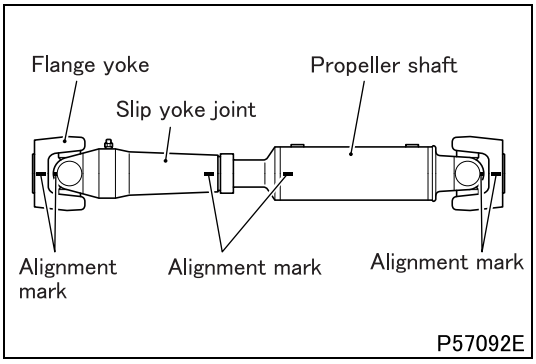

■ **Alignment mark: Propeller shaft**

- To prevent assembly of wrong parts, make alignment marks on flange yoke, slip yoke joint and propeller shaft.

◆Removal procedure◆

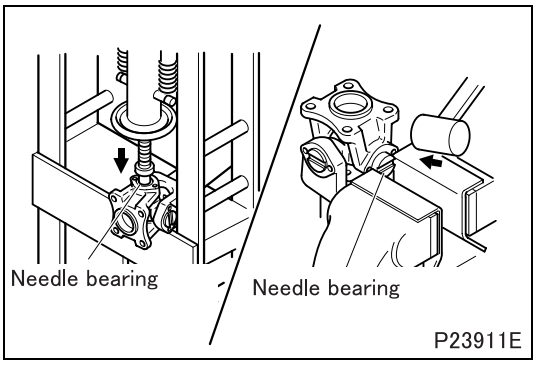

■ **Removal: Needle bearing**

- Make alignment marks on the needle bearing and spider.
- Force out the needle bearing halfway from the yoke using a press, then remove it with a vise.

◆Inspection procedure◆

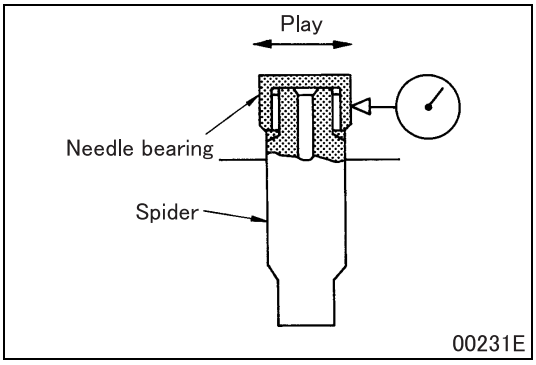

■ **Inspection: Clearance between needle bearing and spider**

- If the measurement exceeds the limit, replace with the universal joint spider kit.

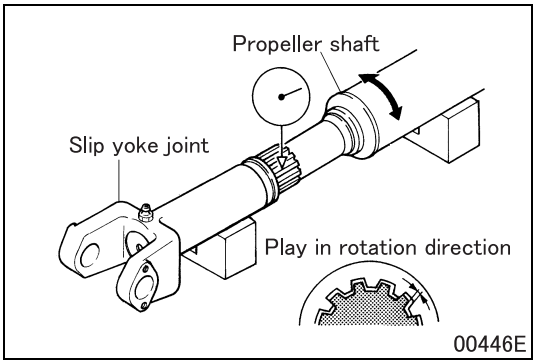

■ **Inspection: Play between slip yoke joint and propeller shaft spline**

- If the measurement exceeds the limit, replace the slip yoke joint and propeller shaft in a set.

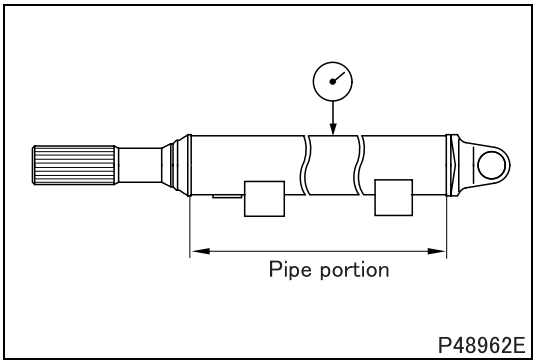

■ **Inspection: Bend of propeller shaft**

- Before measuring the bend of pipe, remove paint from the propeller shaft where the dial gauge is set and the pipe is supported with V blocks using a paint remover.
- Measure bend of propeller shaft at the center of its pipe portion.
- To measure the bend of propeller shaft, turn it fully once and read the dial gauge indicator. The bend is one half of the indicated value.
- If the measurement deviates from the standard value, correct the bend with a press or replace the propeller shaft.

CAUTION ⚠

- **Remove paint using care not to damage the pipe portion of the shaft.**
- **Check the propeller shaft for cracks in the welded area after correcting the bend using a press. If a crack is caused, replace the propeller shaft instead of correcting it by welding.**

◆Installation procedure◆

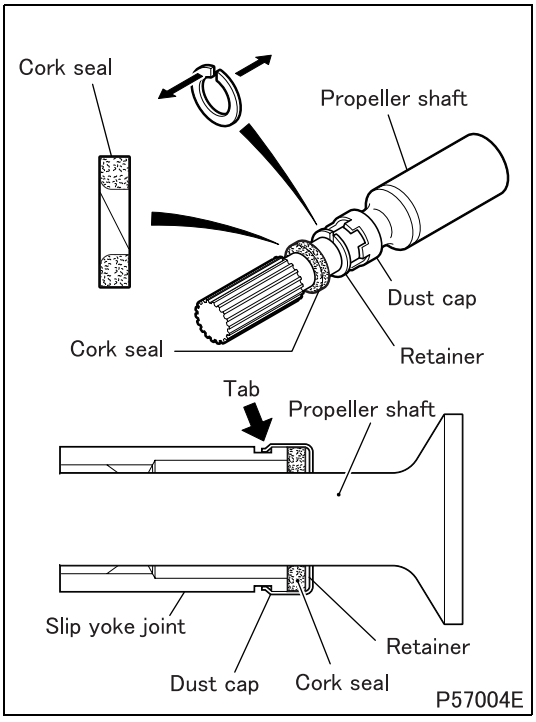

■ **Installation: Dust cap, retainer and cork seal**

- After inserting the dust cap into the propeller shaft, carefully open the retainer right and left, assemble it to the propeller shaft and return it to the original condition.
- Apply grease to the inside circumference of the cork seal and assemble it to the propeller shaft, facing it in the illustrated direction in the same method as the retainer.
- Apply sufficient grease to the splined portion of the propeller shaft, then fit the propeller shaft into the slip yoke joint.
- Press the dust cap against the slip yoke joint in such a way that the cork seal is compressed, and crimp its tabs to engage with the recesses in the slip yoke joint.

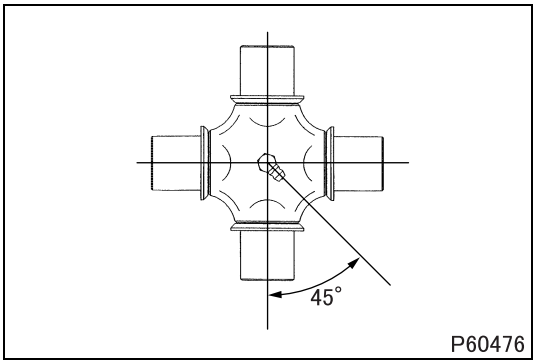

■ **Installation: Spider**

- Fit grease nipple to the spider facing it in the illustrated direction.

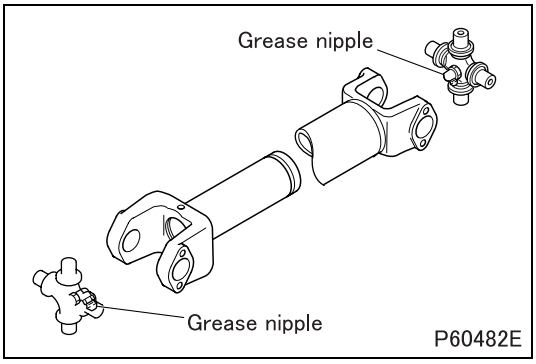

- Install spiders on both ends of the propeller shaft so that their respective grease nipple faces in the same direction.

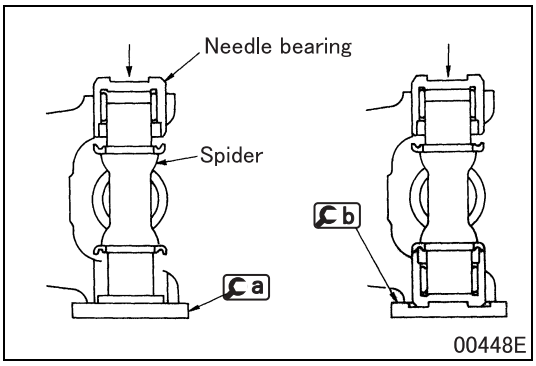

■ **Installation: Needle bearing**

◆Work after installation◆

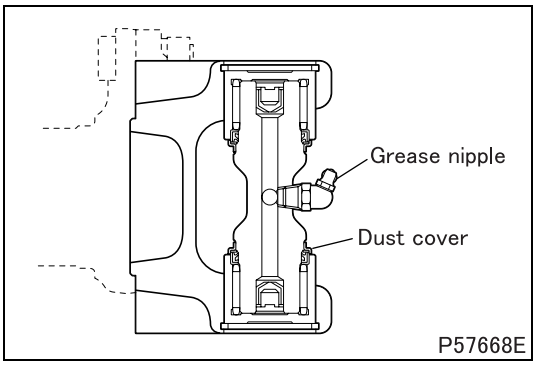

■ **Lubrication: Grease nipple**

- Fill grease through the grease nipple until supplied grease overflows from four dust covers of the spider.
- If grease does not overflow from all of the four dust covers or rust, water and dirt come out with grease, replace the spider with the spider kit.

■ **Inspection: Permissible unbalance amount of propeller shaft**

[Inspection]

- Measure the balance amount (dynamic balance) of the propeller shaft on a balancing machine.
- If the measurement deviates from the standard value, adjust the balance amount in the following procedure.

[Adjustment]

- Dynamic balance may be corrected either by the polar coordinate method or by the 90° component of force method.

CAUTION ⚠

- The 90° component of force method is preferable for balancing the propeller shaft if the amount of imbalance is large because it requires less balance pieces.

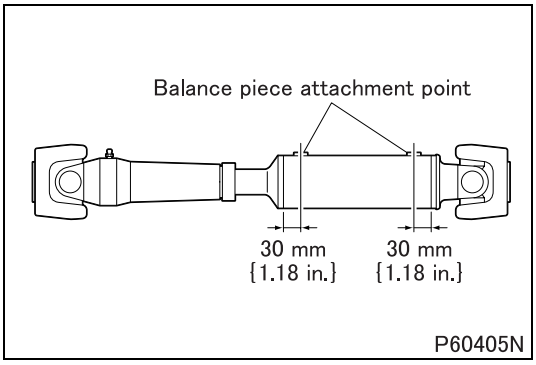

(1) Polar coordinate method

- Attach appropriate balance pieces to the illustrated points so that the unbalance amount comes within the standard value.
- Maximum balance piece allowance for one point is 120 g {4.23 oz}.
- Use a combination that keeps the number of balance pieces to a minimum.

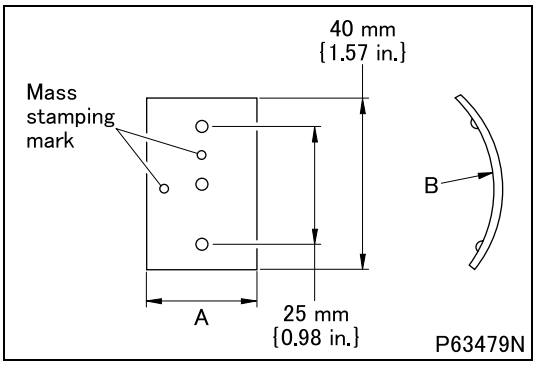

Types of balance pieces

Mass	Dimension A	Radius B of the bend	Thickness
10 g {0.35 oz}	14 mm {0.55 in.}	41.3 mm {1.63 in.}	2.3 mm {0.09 in.}
20 g {0.71 oz}	28 mm {1.10 in.}	45 mm {1.77 in.}	
40 g {1.41 oz}	55.7 mm {2.19 in.}		
60 g {2.12 oz}	83.5 mm {3.29 in.}		

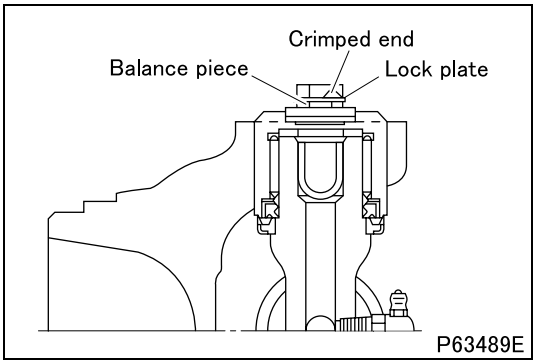

(2) 90° component of force method

- Attach appropriate balance pieces and lock plate to the illustrated points so that the unbalance amount comes within the standard value.
- Maximum balance piece allowance for one point is 120 g {4.23 oz}.
- Use a combination that keeps the number of balance pieces to a minimum.

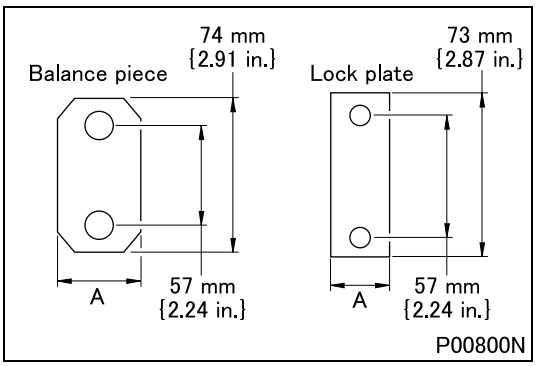

- Types of lock plate and balance pieces

Part name	Mass	Dimension A	Thickness
Lock plate	8 g {0.28 oz}	18 mm {0.71 in.}	0.8 mm {0.031 in.}
Balance piece	20 g {0.71 oz}	25 mm {0.98 in.}	1.6 mm {0.063 in.}
Balance piece	35 g {1.23 oz}	21.6 mm {0.85 in.}	3.2 mm {0.13 in.}
Balance piece	50 g {1.76 oz}	32.2 mm {1.27 in.}	3.2 mm {0.13 in.}

<With center bearing>

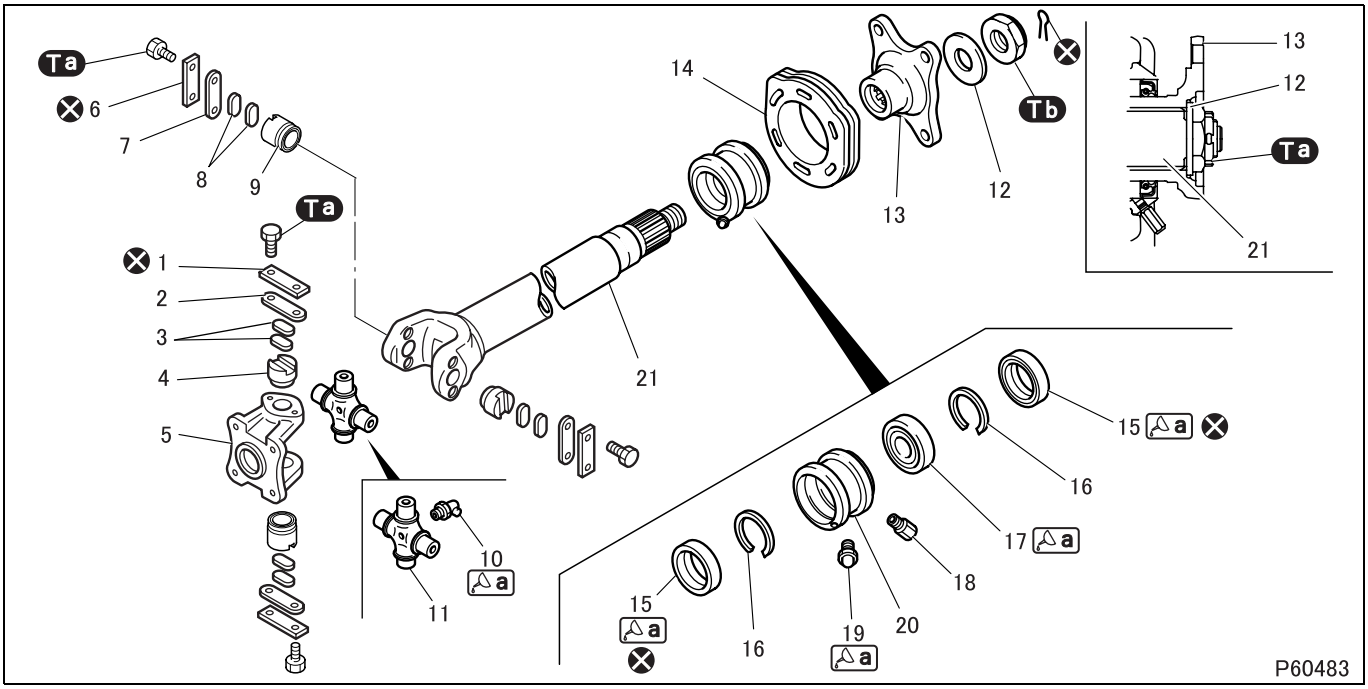

- Balance piece installing position (at flange yoke or propeller shaft) depends on the unbalance of the propeller shaft. This illustration is an example.

● Disassembly sequence

1 Lock plate
2 Bearing case retainer
3 Shim
4 Needle bearing
5 Flange yoke
6 Lock plate
7 Bearing case retainer
8 Shim
9 Needle bearing
10 Grease nipple
11 Spider
12 Washer
13 Companion flange
14 Cushion rubber
15 Oil seal
16 Snap ring
17 Center bearing
18 Relief valve
19 Grease nipple
20 Center bearing case
21 Propeller shaft

⊗: Non-reusable parts

CAUTION ⚠

- **Be careful not to damage the needle bearing because it is fitted with a seal.**

● Assembly sequence

Follow the disassembly sequence in reverse.

Repair kit: Universal joint spider kit

CAUTION ⚠

- **Be sure to reinstall removed parts at their original positions.**
- **Correct dynamic balance after replacement of parts.**

Service standards (Unit: mm {in.})

Location	Maintenance item	Standard value	Limit	Remedy
–	Axial clearance of spider	0 to 0.15 {0 to 0.0059}	–	Adjust
–	Permissible amount of unbalance of propeller shaft (periphery of pipe)	0.49 N·cm {0.0036 ft.lbs, 50 gf·cm} max./1600 rpm	–	Adjust

Location	Maintenance item	Standard value	Limit	Remedy
4, 5	Clearance between needle bearing and flange yoke ("–" indicates interference.)	–0.011 to 0.030 {–0.00043 to 0.0012}	0.1 {0.0039}	Replace
4, 9, 11	Clearance between needle bearing and spider	0.023 to 0.07 {0.00091 to 0.0028}	0.2 {0.0079}	Replace
9, 21	Clearance between needle bearing and propeller shaft ("–" indicates interference.)	–0.011 to 0.030 {–0.00043 to 0.0012}	0.1 {0.0039}	Replace
21	Bend of propeller shaft	0 to 0.6 {0 to 0.024}	–	Correct or replace

Tightening torque (Unit: N·m {ft.lbs, kgf·m})

Mark	Parts to be tightened	Tightening torque	Remarks
Ta	Bolt (needle bearing mounting)	18 to 26 {13 to 20, 1.8 to 2.7}	–
Tc	Nut (companion flange mounting)	540 to 740 {395 to 540, 55 to 75}	–

Lubricant and/or sealant

Mark	Points of application	Specified lubricant and/or sealant	Quantity
a	Supply through grease nipple	Wheel bearing grease [NLGI No. 2 (Li soap)]	As required
	Oil seal lips		
	Fill the area between balls of center bearing		

Special tools (Unit: mm {in.})

Mark	Tool name and shape	Part No.	Application
a	Spider rest A: ϕ43 {1.69}, B: 5 {0.20}, C: ϕ70 {2.76} 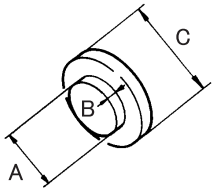 00437	03724-13000	Press-fitting of needle bearing
b	Spider rest 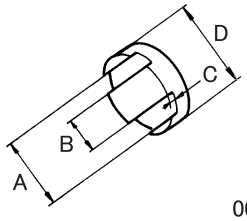 00443 A: 54 {2.13}, B: 22 {0.87}, C: 5 {0.20}, D: ϕ70 {2.76}	03724-14000	Press-fitting of needle bearing
c	Socket wrench A: 50 {1.97} 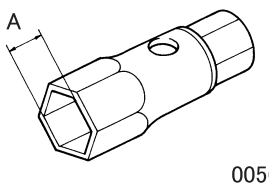 00561	44490-44101	Removal and installation of companion flange mounting nut (commercially available equivalent can be used)

Mark	Tool name and shape	Part No.	Application
cd	Gear puller 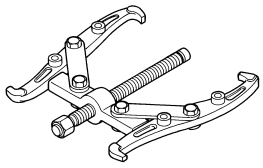 00553	MH061102	Removal of center bearing

◆Work before removal◆

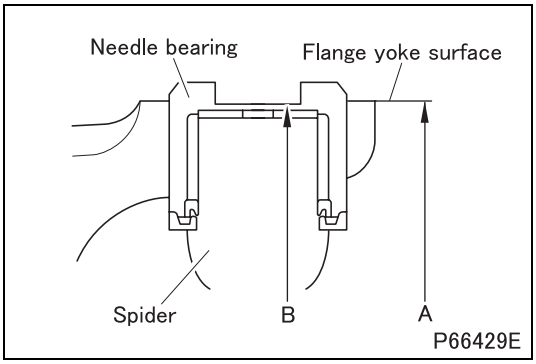

■ **Inspection: Axial clearance of spider**

- Measure the clearance of needle bearing (shim adjusting allowance= A – B).
- If the measurement exceeds the standard value, adjust the clearance by changing thickness of the shim.
  Types of shim: 0.1 mm {0.0039 in.}, 0.2 mm {0.0079 in.}

NOTE

- **Never allow the shim to protrude from the flange yoke surface.**
- **Use shims for both ends with the same thickness as much as possible to ensure rotation balance.**

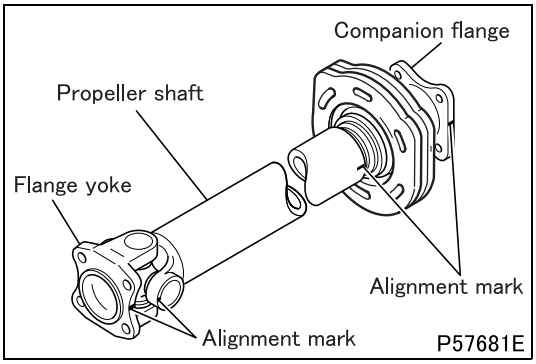

■ **Alignment mark: Propeller shaft**

- To prevent assembly of wrong parts, make alignment marks on flange yoke, companion flange and propeller shaft.

◆Removal procedure◆

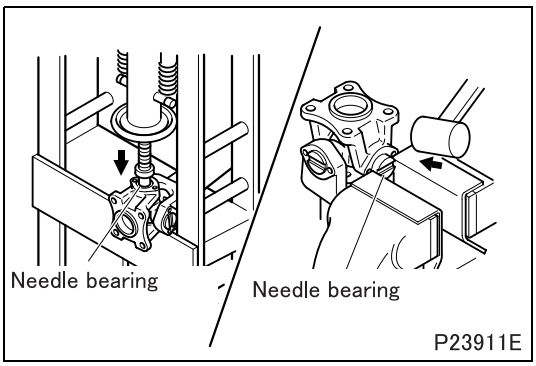

■ **Removal: Needle bearing**

- Make alignment marks on the needle bearing and spider.
- Force out the needle bearing halfway from the yoke using a press, then remove it with a vise.

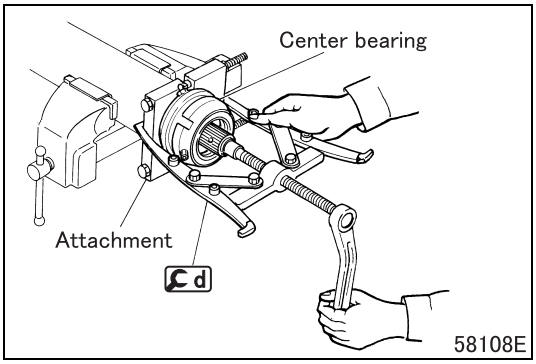

■ **Removal: Center bearing**

- Using d, remove the center bearing with the aid of the attachment.

◆Inspection procedure◆

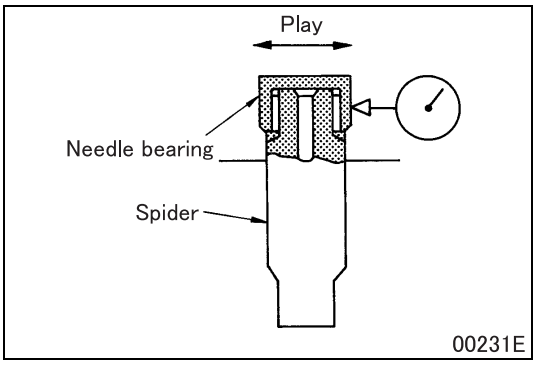

■ **Inspection: Clearance between needle bearing and spider**

- If the measurement is higher than the limit, replace with the universal joint spider kit.

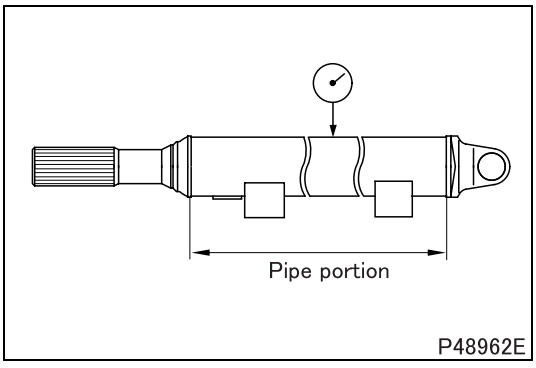

■ **Inspection: Bend of propeller shaft**

- Before measuring the bend of pipe, remove paint from the propeller shaft where the dial gauge is set and the pipe is supported with V blocks using a paint remover.
- Measure bend of propeller shaft at the center of its pipe portion.
- To measure the bend of propeller shaft, turn it fully once and read the dial gauge indicator. The bend is one half of the indicated value.
- If the measurement deviates from the standard value, correct the bend with a press or replace the propeller shaft.

CAUTION ⚠

- **Remove paint using care not to damage the pipe portion of the shaft.**
- **Check the propeller shaft for cracks in the welded area after correcting the bend using a press. If a crack is caused, replace the propeller shaft instead of correcting it by welding.**

◆Installation procedure◆

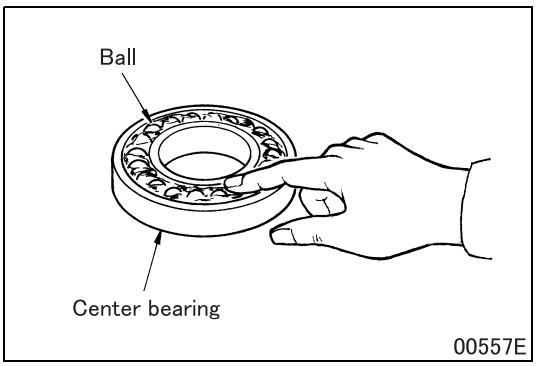

■ **Installation: Center bearing**

- Fill space between balls of the center bearing with grease.

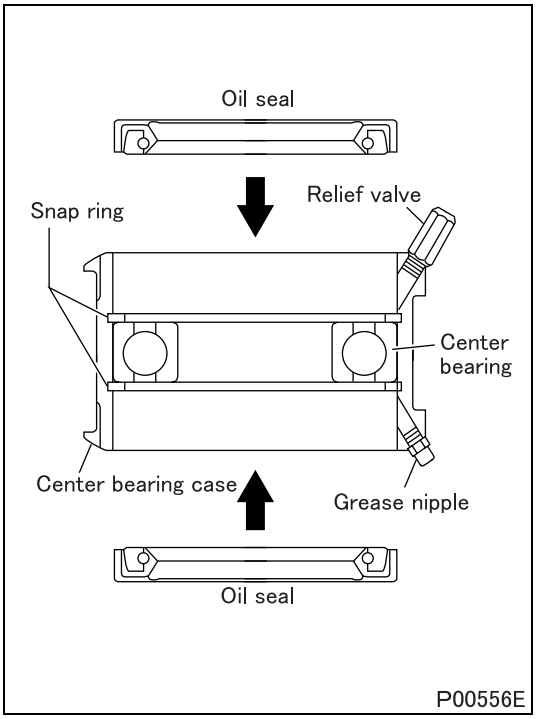

■ **Installation: Oil seal**

- Apply grease to the oil seal lip.
- Install the oil seal in the illustrated direction, aligning it with the end face of the center bearing case.

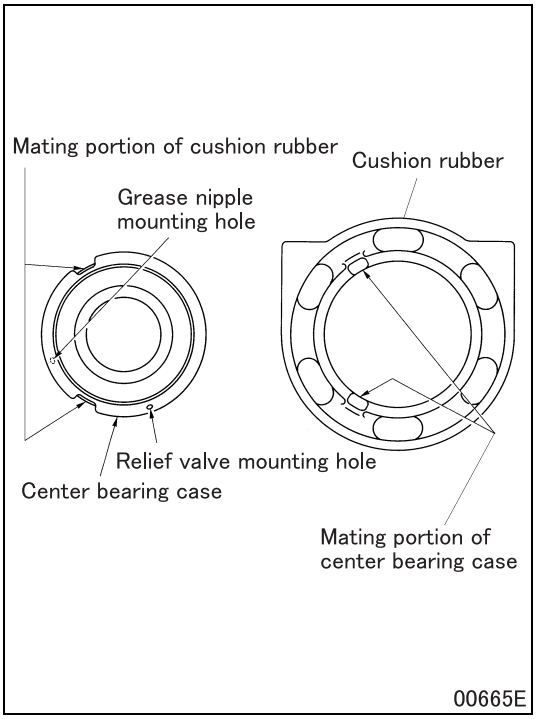

■ **Installation: Cushion rubber**

- Fit the illustrated portion of the cushion rubber in the illustrated portion of the center bearing case by aligning them. If it is difficult to fit it in, apply soapy water for smooth fitting.

CAUTION ⚠

- **Grease deteriorates cushion rubber. Be sure to use soapy water.**

- Assemble the cushion rubber so that grease nipple mounting holes face downward.

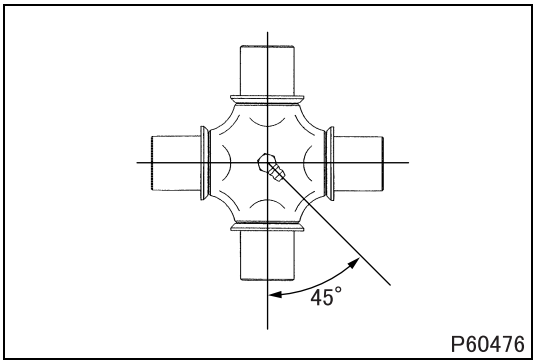

■ **Installation: Grease nipple**

- Fit grease nipple to the spider facing it in the illustrated direction.

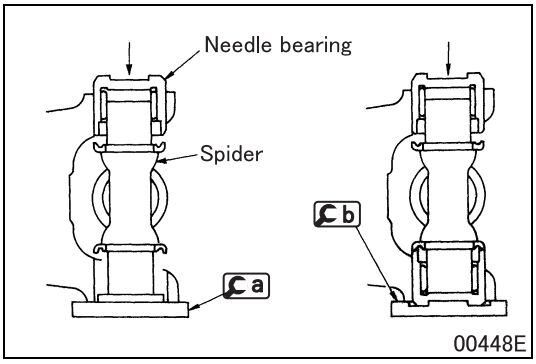

■ **Installation: Needle bearing**

◆Work after installation◆

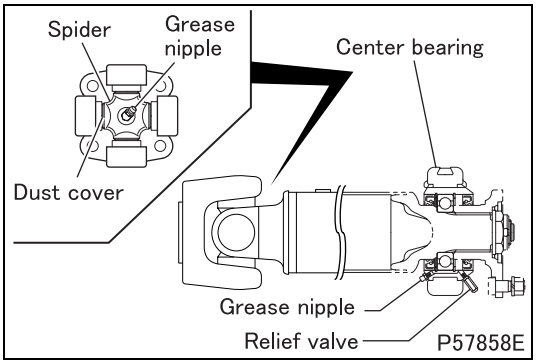

■ **Lubrication: Grease nipple**

- Fill grease through the grease nipple until supplied grease overflows from four dust covers of the spider.
- If grease does not overflow from all of the four dust covers or rust, water and dirt come out with grease, replace the spider with the spider kit.
- Fill grease through the grease nipple until supplied grease overflows from the relief valve of the center bearing.

■ **Inspection: Permissible unbalance amount of propeller shaft**

[Inspection]

- Measure the balance amount (dynamic balance) of the propeller shaft on a balancing machine.
- If the measurement deviates from the standard value, adjust the balance amount in the following procedure.

[Adjustment]

- Dynamic balance may be corrected either by the polar coordinate method or by the 90° component of force method.

CAUTION ⚠

- **The 90° component of force method is preferable for balancing the propeller shaft if the amount of imbalance is large because it requires less balance pieces.**
- **Use the polar coordinate method for balance correction on the center bearing-installed side of propeller shaft.**

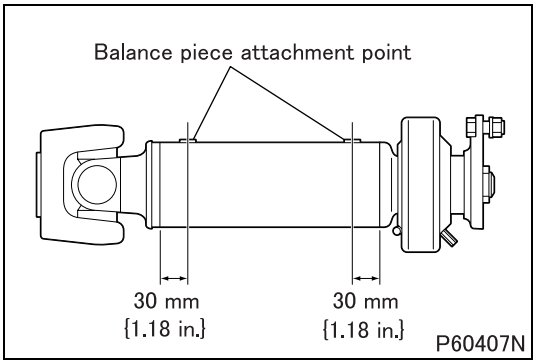

(1) Polar coordinate method

- Attach appropriate balance pieces and lock plate to the illustrated points so that the unbalance amount comes within the standard value.
- Maximum balance piece allowance for one point is 120 g {4.23 oz}.
- Use a combination that keeps the number of balance pieces to a minimum.

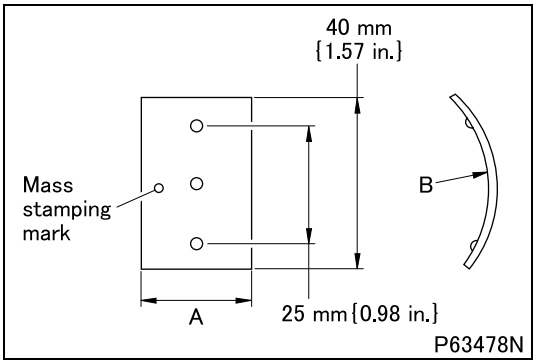

Types of balance pieces

Mass	Dimension A	Radius B of the bend	Thickness
10 g {0.35 oz}	14 mm {0.55 in.}	41.3 mm {1.63 in.}	2.3 mm {0.091 in.}
20 g {0.71 oz}	28 mm {1.10 in.}	45 mm {1.77 in.}	
40 g {1.41 oz}	55.7 mm {2.19 in.}		
60 g {2.12 oz}	83.5 mm {3.29 in.}		

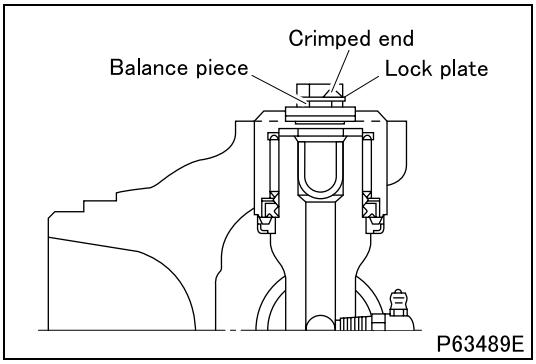

(2) 90° component of force method

- Attach appropriate balance pieces and lock plate to the illustrated points so that the unbalance amount comes within the standard value.
- Maximum balance piece allowance for one point is 120 g {4.23 oz}.
- Use a combination that keeps the number of balance pieces to a minimum.

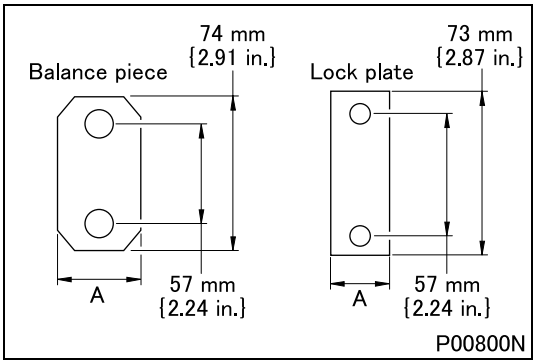

- Types of lock plate and balance pieces

Part name	Mass	Dimension A	Thickness
Lock plate	8 g {0.28 oz}	18 mm {0.71 in.}	0.8 mm {0.031 in.}
Balance piece	20 g {0.71 oz}	25 mm {0.98 in.}	1.6 mm {0.063 in.}
Balance piece	35 g {1.23 oz}	21.6 mm {0.85 in.}	3.2 mm {0.13 in.}
Balance piece	50 g {1.76 oz}	32.2 mm {1.27 in.}	3.2 mm {0.13 in.}

Group 26A

Front Axle <FK61>

Table of Contents

Back

Home

MITSUBISHI FUSO TRUCK OF AMERICA, Inc.

Pub.No.TWME0709-26A

INDEX

SPECIFICATIONS 26A-2

STRUCTURE AND OPERATION
1. **Wheel Hub and Brake Drum 26A-3**
2. **Front Axle, Knuckle and Kingpin 26A-3**

TROUBLESHOOTING 26A-4

ON-VEHICLE INSPECTION AND ADJUSTMENT
1. **Inspection and Adjustment of Wheel Alignment 26A-6**
2. **Inspection and Adjustment of Steering Angle 26A-10**
3. **Inspection of Side Slip 26A-10**
4. **Inspection of Tie Rod End Ball Joint 26A-11**
5. **Inspection of Wheel Bearing for Play 26A-11**
6. **Inspection of Knuckle Joint for Play 26A-11**

WHEEL HUB AND BRAKE DRUM 26A-12

FRONT AXLE, KNUCKLE AND KINGPIN 26A-26

TIE ROD 26A-34

SPECIFICATIONS

Item		Specifications
Front axle	Model	F400T
	Type	Reverse Elliot, “I” beam
Kingpin outer diameter × length mm {in.}		35 × 195 {1.38 × 7.68}
Tread (dimension notified to the authorities) mm {in.}		1790 {70.5}
Mass (with drum brakes) kg {lb}		Approx. 185 {405}

1. Wheel Hub and Brake Drum

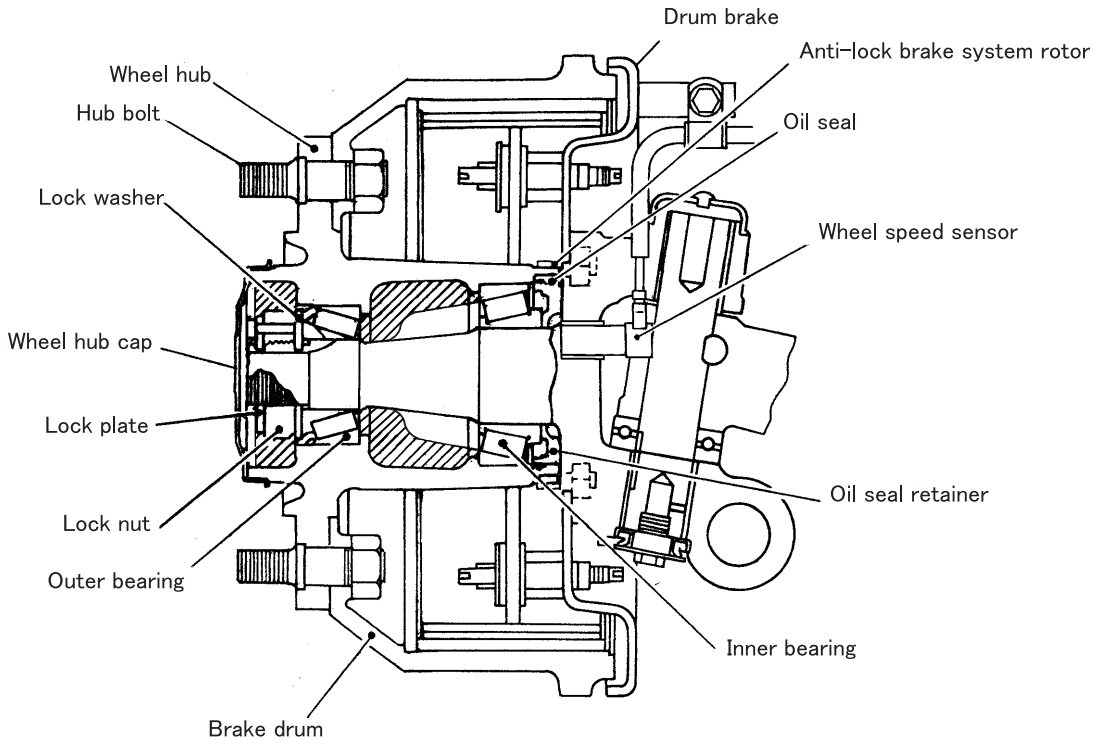

2. Front Axle, Knuckle and Kingpin

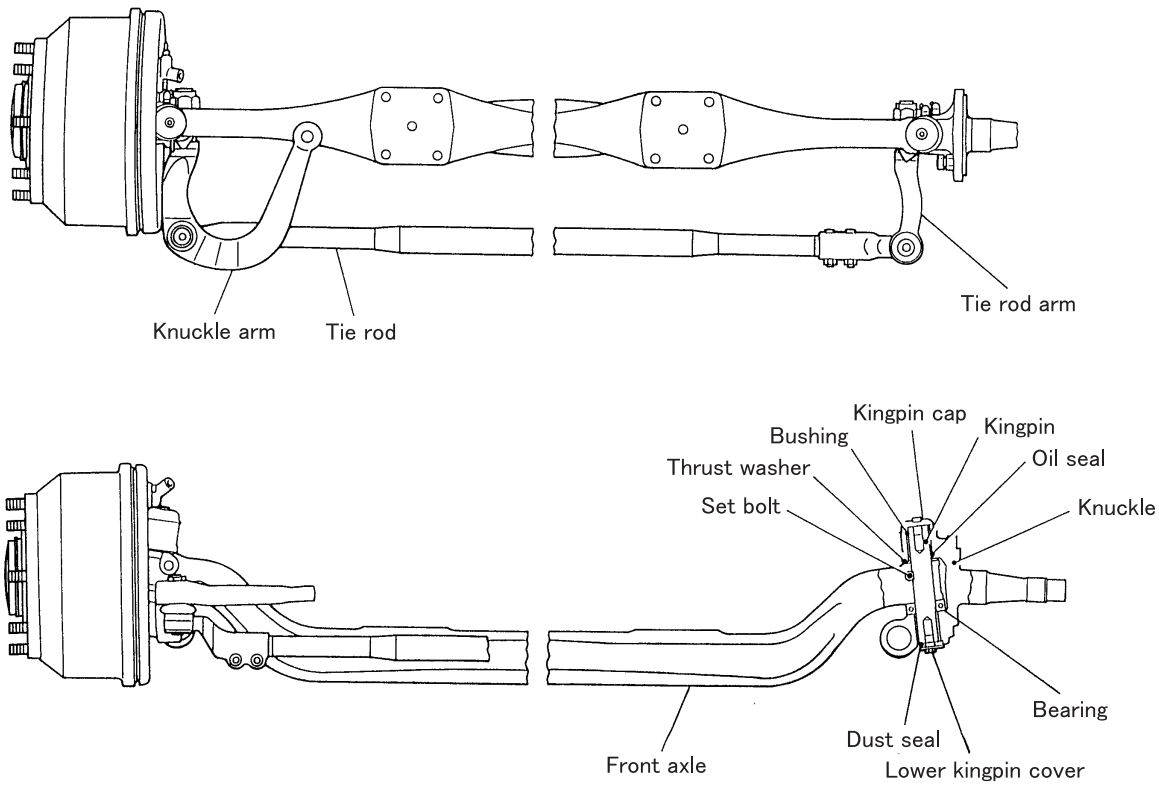

Possible causes	Symptoms	Continuous noise while cruising	Intermittent noise while cruising	Steering wheel shakes	Steering feels stiff	Steering wheel return poor	Unable to steer the steering wheel	Steering pulls to one side	Uneven wear or early wear of front tires	Reference Gr
Wheel hub, knuckle and kingpin, front axle	Wheel alignment misaligned			O	O	O			O	
	Steering angle adjustment faulty						O			
	Wheel hub bearing seized, worn or rotation faulty	O		O						
	Wheel hub bearing broken		O							
	Kingpin worn			O						
	Clearance between kingpin and bushing excessive			O	O					
	Greasing to kingpin insufficient				O					
	Kingpin bearing seized, worn or rotation faulty				O					
	Vertical clearance between knuckle and front axle excessive			O						
	Knuckle arm and tie rod arm tightening nuts loose			O						
	Ball stud tightening nut of tie rod end loose			O						
	Tie rod end ball stud worn			O						
	Tie rod bent						O			
	Knuckle bent							O		
	Front axle bent							O		
	Various parts of front axle overtightened					O				
Front suspension	U-bolt nut of front suspension loose			O						Gr33
	One of front springs worn-out or broken							O		
Tire	Tire inflation pressure uneven			O					O	Gr31
	Tire inflation pressure too little				O					
	Inflation pressure uneven for right and left tires							O		
	Size and type of right and left tires different							O	O	
	Outer diameters of right and left tires remarkably different							O		
	Handling of tires inadequate								O	

M E M O

ON-VEHICLE INSPECTION AND ADJUSTMENT

1. Inspection and Adjustment of Wheel Alignment

Before performing inspection and adjustment of wheel alignment, set the vehicle to the following condition.

- Park the vehicle unloaded on a level place.
- The vehicle needs to be equipped with proper size tires.
- If the wear condition of tires on the right is remarkably different from that of tires on the left, replace tires.
- Tires need inflation to specified pressure.
- Correct if the vehicle tilts due to faulty suspension.
- Service all parts of the front axle and ensure that there is no fault such as the following.
  - Play at or loose kingpin
  - Loose front wheel hub
  - Loose bolts used for tightening various parts of tie rod arm, knuckle arm and tie rod
  - Bend of knuckle and front axle
- Adjust play at steering wheel properly.
- For wheel alignment, which is related to the side slip amount, both wheel alignment and the side slip amount must conform to the standard values.

Service standards (Unit: mm {in.})

Location	Maintenance item	Standard value	Limit	Remedy
–	Toe-in	1 to 3 {0.039 to 0.12}	–	Adjust
	Camber	1°30' ± 1°00'	–	Replace
	Caster	2°30' $^{+1°30'}_{-1°00'}$	–	Replace
	Kingpin inclination angle	7° ± 30'	–	Replace

Tightening torque (Unit: N·m {ft.lbs, kgf·m})

Mark	Parts to be tightened	Tightening torque	Remarks
–	Nut (tie rod end clamp tightening)	82 ± 8 {60 ± 5.9, 8.4 ± 0.8}	Wet

Lubricant and/or sealant

Mark	Points of application	Specified lubricant and/or sealant	Quantity
–	Clamp nut thread of tie rod end	Chassis grease [NLGI No.1 (Li soap)]	As required

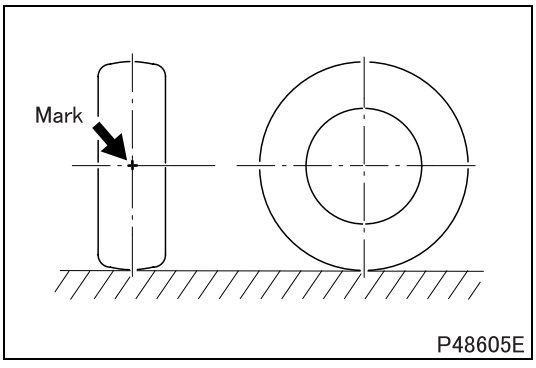

1.1 Inspection and adjustment of toe-in

[Inspection]

- Direct the front wheels exactly to forward running position.
- Put a mark on both the right and left tires at the height of the front wheel axis in the center of the tire width.

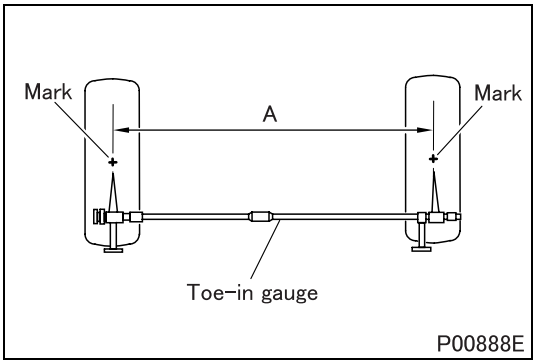

- Align the two points of the toe-in gauge with respective marks and measure distance A between the marks.

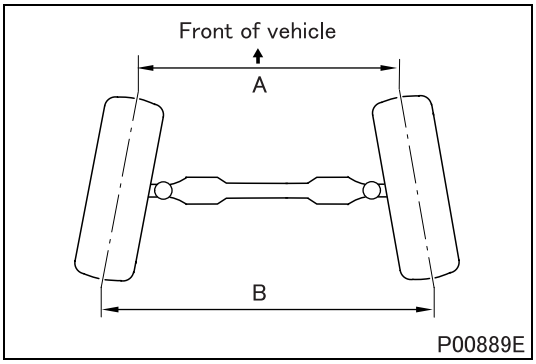

- Push the vehicle to roll the tires 180 degrees.
- Measure distance B between the marks that have moved to the rear of the vehicle.
- If toe-in (difference between A and B) deviates from the standard value, adjust.

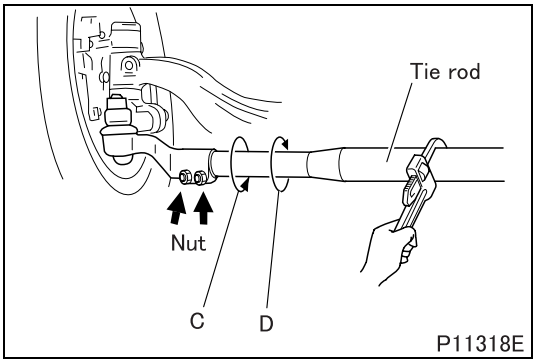

[Adjustment]

★ • Loosen the right and left nuts of tie rod.
- Turn the tie rod with a pipe wrench to adjust the toe-in.
  C: When adjusting to the toe-out direction
  D: When adjusting to the toe-in direction
- After adjustment, apply grease to the nut and tighten it to the specified torque.

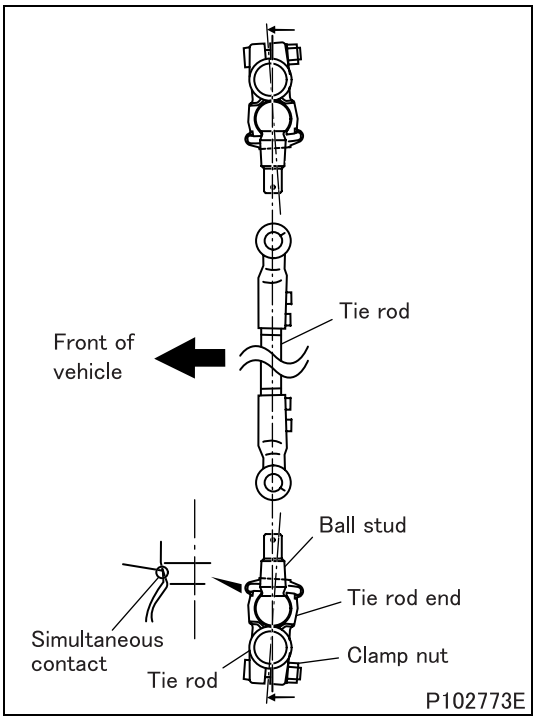

- Hold down the tie rod toward the front or rear of the vehicle with the front wheels directed to forward running position so that the right and left tie rod ends are in contact with the ball studs at the same time.
- In this state adjust the toe-in and tighten the clamp nut to secure the tie rod end.

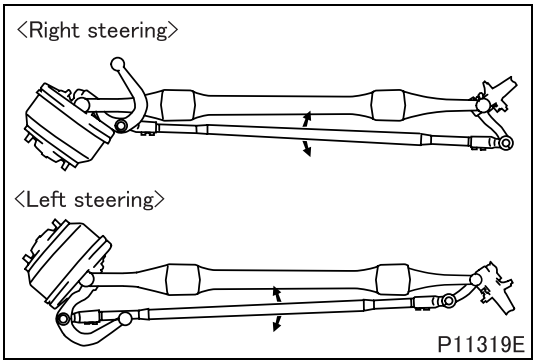

- After adjustment, turn the steering wheel to the extreme left (the state in which the knuckle stopper bolt is contacted), and move the tie rod in the longitudinal direction of the vehicle by hand to make sure that the tie rod moves.
  Do the same for right steering.
  (If the tie rod swings, the tie rod ends should be in contact with the ball studs at the same time.)

WARNING ⚠

- **Be very careful that your hand, or anything else, is not caught due to the movement of the tie rod when the steering wheel is turned left and right.**

- If the tie rod does not swing, repeat the work from the item marked with ★.

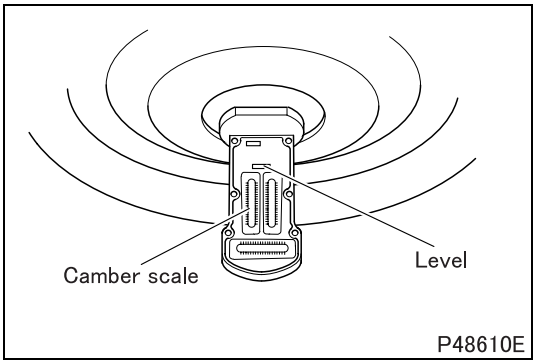

1.2 Inspection of camber

- Direct the front wheels exactly to forward running position.
- Remove the wheel hub cap.
- Wipe off grease from the knuckle end, and bring the camber/caster/kingpin gauge into intimate contact with the front wheel hub.
- Place the level so that the bubble remains in the middle, and read center of bubbles on camber scale in this state to find the camber. Do the same for the right and left front tires.
- If the measured value deviates from the standard value, abnormalities such as wear of kingpin and bushing, loose hub bearing, and bend of knuckle and front axle are suspected. Inspect each part and replace defective parts.

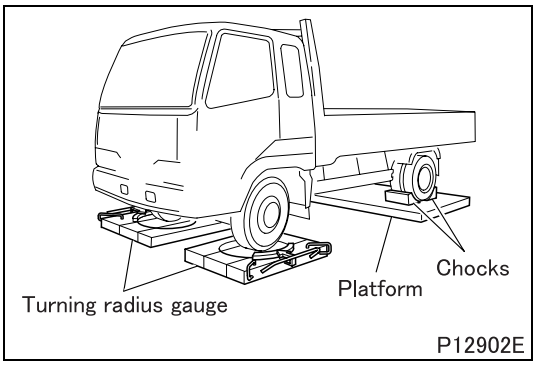

1.3 Inspection of caster and kingpin inclination angle

- Prepare a platform with the same height as the turning radius gauge and place it under the rear wheels so that the vehicle may be placed level.
- Apply chocks to the rear wheels.

WARNING ⚠

- **Do not remove chocks until the entire operation is completed.**

- Keep the turning radius gauge locked.
- Jack up the vehicle and set the right and left front wheels so that respective ground contact area centers of the two wheels and turn table centers may meet.

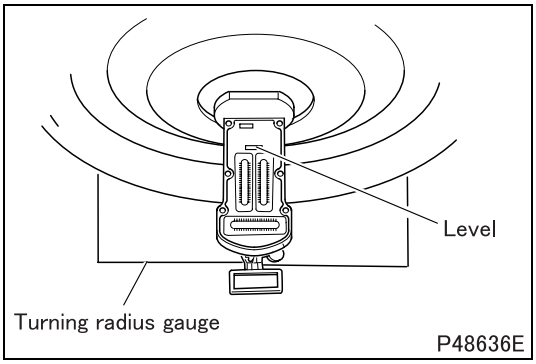

- Unfasten locking of the turning radius gauge, and set the scale to 0 degrees.
- As with the camber measurement in Section **1.2**, attach the camber/caster/kingpin gauge and set the level so that the bubble remains in the middle.

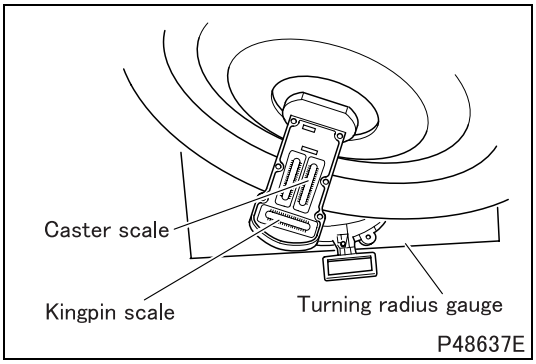

- Apply brake pedal, and with brake applied to the front wheels, turn steering wheel slowly from the point of 0 degrees on the turning radius gauge until the direction is changed by 20 degrees to the right side in the case of the right front wheel and to 20 degrees to the case of the left front wheel.

NOTE

- **It is not possible to make exact measurements unless the brake remains applied, otherwise the wheels will turn slightly.**

- After setting the steering at 20 degrees, set the caster scale and the center of the bubble of the kingpin scale to 0 degrees by turning the adjuster.

NOTE

- **Pay attention to the kingpin scale because it has scales for right and left: align the right kingpin scale in the case of the right front wheel, and left kingpin scale in the case of the left front wheel.**

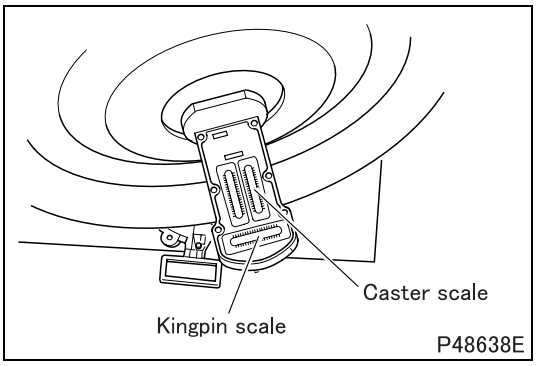

- Reverse this position, turn the steering wheel slowly until the direction of the front wheels changes by 20 degrees in the opposite direction.
- Read the center of the bubbles at this position of the caster scale and kingpin scale to find caster and kingpin inclination angles.
- If the measured value deviates from the standard value, abnormalities such as wear of kingpin and bushing, loose hub bearing, and bend of knuckle and front axle are suspected. Inspect each part and replace defective parts.

2. Inspection and Adjustment of Steering Angle

- Perform steering angle inspection and adjustment only after wheel alignment inspection and adjustment has been completed.

Service standards

Location	Maintenance item		Standard value	Limit	Remedy
–	Steering angle	Inside (outside steering angle is for reference only)	51° (38°)	–	Adjust

Tightening torque (Unit: N·m {ft.lbs, kgf·m})

Mark	Parts to be tightened	Tightening torque	Remarks
–	Lock nut (knuckle stopper bolt tightening)	71 ± 12 {52 ± 8.9, 7.2 ± 1.2}	–

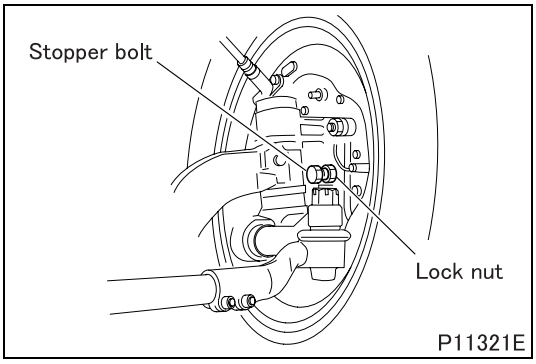

- Set the turning radius gauge and a platform on the vehicle in the same manner as in the case of the caster and kingpin inclination angle measurement performed in Section **1.3**.
- Turn the steering wheel right or left completely from the position where the turning radius gauge is set to 0 degrees, and read the scale of the turning radius gauge to measure the steering angle.
- If the measured value deviates from the standard value, adjust with the knuckle stopper bolt and tighten the lock nut to the specified torque.

3. Inspection of Side Slip

- Perform side slip inspection only after wheel alignment inspection and adjustment has been completed.
- For the side slip amount, which is related to wheel alignment, both the side slip amount and wheel alignment must conform to the standard values.

Service standards (Unit: mm {in.})

Location	Maintenance item	Standard value	Limit	Remedy
–	Side slip amount (per 1 m {3.3 ft.})	3 {0.12} or less	–	Adjust

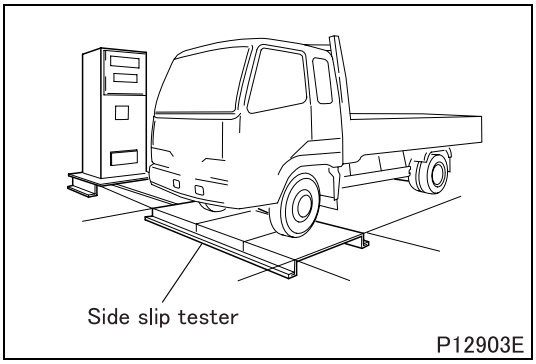

- Set the front wheels exactly to forward running position.
- Move the vehicle forward past the side slip tester as slowly as possible to inspect side slip.

NOTE

- **Pay attention to the following when moving over the side slip tester.**
- **Be sure to hold steering exactly at the forward running position, and make no turn.**
- **Do not apply brake.**
- **Keep the speed constant.**

- If the measured value deviates from the standard value, inspect and adjust wheel alignment.

4. Inspection of Tie Rod End Ball Joint

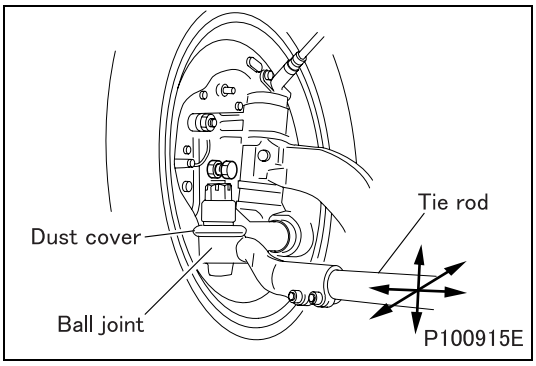

(1) Play

- Hold the tie rod section of the tie rod with the vehicle kept stationary, and move it in the back-and-forth, up-and-down and right-and-left directions to check for play at ball joints of the tie rod end.

NOTE

- **Be sure to check for play at ball joints of both right and left sides of the tie rod.**

- If there is play, replace the tie rod end of the tie rod.

(2) Dust cover

- Check that there are no wear, cracks or damage. Their abnormalities can cause water to enter the ball joint, resulting in premature wear.
- If wear, crack, or damage is present, inspect traces of water entry and occurrence of rust in the ball joint. If any abnormality is found, replace the tie rod end. If no abnormality is found, replace the dust cover and reapply grease.

5. Inspection of Wheel Bearing for Play

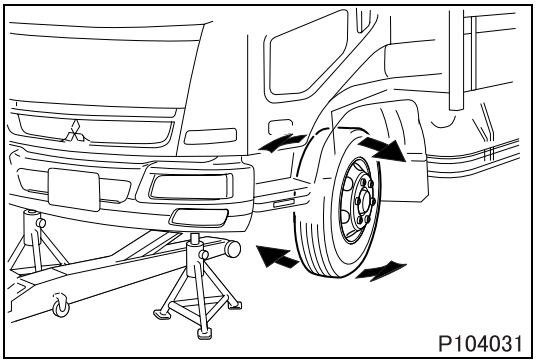

- Jack up the vehicle.
- Try to move the top and bottom of the front tire by hands in the illustrated directions to inspect the wheel bearing for play.
- If play is found with the feel of hands, repeat the inspection procedure while having the brake pedal pressed by another personnel. When the play is removed by operating the brake pedal, the symptom indicates that there is play in the wheel bearing, not in the suspension or other related parts. Then inspect the turning torque of the wheel bearing and adjust it as required. (See WHEEL HUB AND BRAKE DRUM or WHEEL HUB AND ROTOR.)
- If the turning torque of the wheel bearing cannot be adjusted correctly or the play still remains after the adjustment, replace the wheel bearing with a new one. (See WHEEL HUB AND BRAKE DRUM or WHEEL HUB AND ROTOR.)

6. Inspection of Knuckle Joint for Play

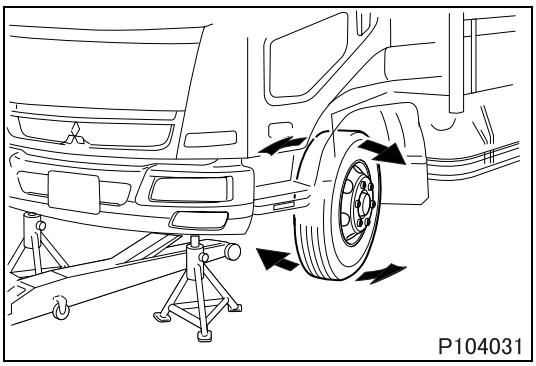

- Jack up the vehicle.
- Try to move the top and bottom of the front tire by hands in the illustrated directions to inspect the knuckle joint for play.
- If play is found with the feel of hands, repeat the inspection procedure while having the brake pedal pressed by another personnel. If there is any play, it may be caused by the play in the knuckle joint. Check each part and replace a defective part. (See KNUCKLE AND KING PIN, FRONT AXLE.)

WHEEL HUB AND BRAKE DRUM

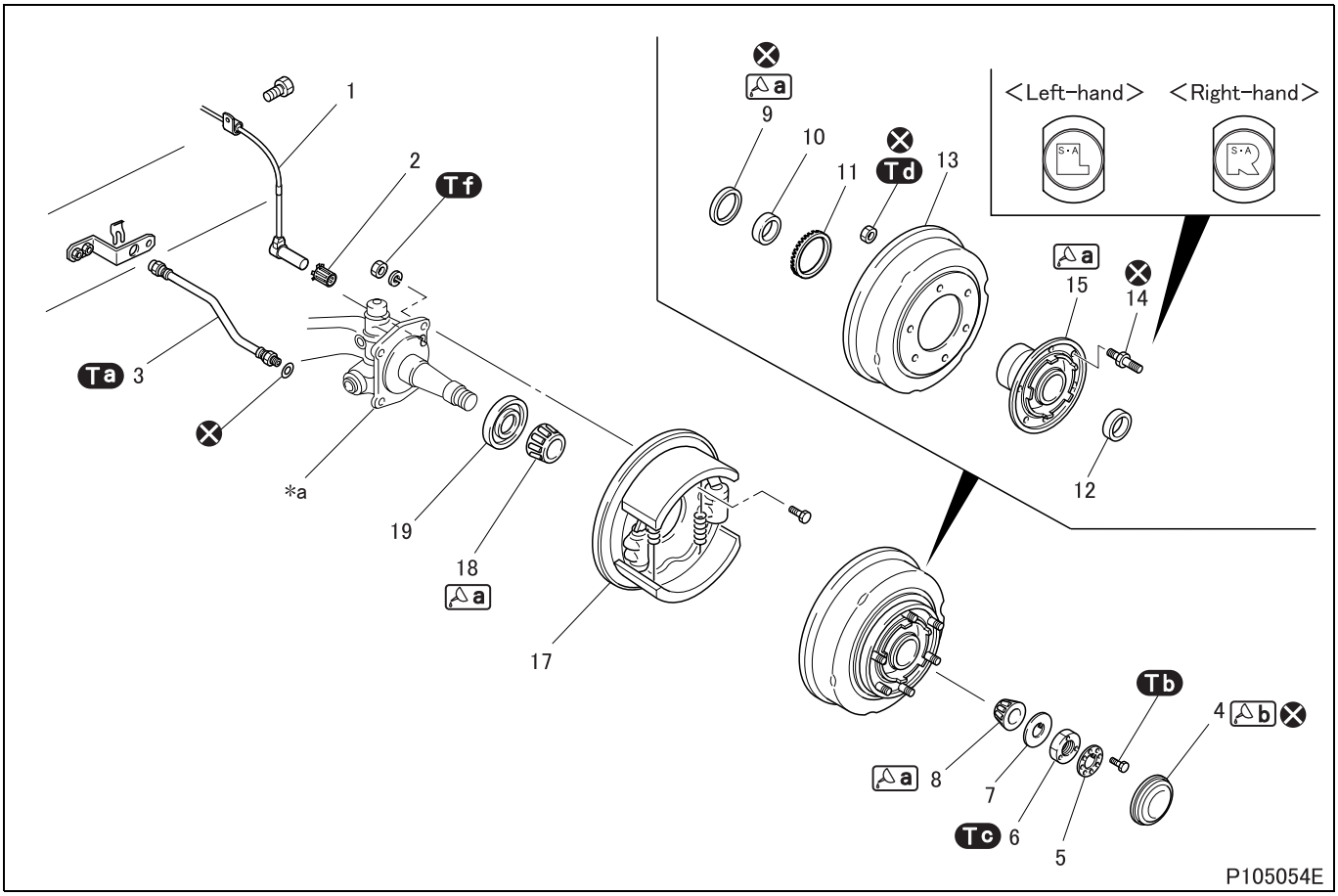

● **Disassembly sequence**

1 Wheel speed sensor
2 Spring spacer
3 Brake hose
4 Wheel hub cap
5 Lock plate
6 Lock nut
7 Lock washer
8 Outer bearing inner race
9 Oil seal
10 Inner bearing outer race
11 Anti-lock brake system rotor
12 Outer bearing outer race
13 Brake drum
14 Hub bolt
15 Wheel hub
16 Front drum brake (See Gr35A.)
17 Inner bearing inner race
18 Oil seal retainer

***a**: Knuckle
⊗: Non-reusable parts

CAUTION ⚠

- **Plug the brake hose to prevent entry of dust and dirt after it has been removed.**
- **Store the wheel speed sensor so that its end is not damaged after it has been removed.**

NOTE

- **Do not remove the anti-lock brake system rotor unless replacing it.**
- **Do not disassemble the brake drum and wheel hub unless replacing them.**

● **Assembly sequence**

Follow the disassembly sequence in reverse.

CAUTION ⚠

- **Make sure that the brake hose is not twisted when installing it.**
- **Make sure that the brake lining surface and inner surface of the brake drum of the wheel hub and brake drum are free from grease to avoid malfunction of brakes.**
- **Make sure that the anti-lock brake system rotor and oil seal are not damaged when installing the wheel hub and brake drum on the knuckle.**
- **Adjust brake shoe clearance after assembly. (See Gr35A.)**
- **Bleed air in the brake system after assembly to avoid malfunction of brakes. (See Gr35A.)**

Service standards (Unit: mm {in.})

Location	Maintenance item		Standard value	Limit	Remedy
–	Starting torque of wheel hub bearing (tangential force at hub bolt position with oil seal assembled)		1.0 to 3.9 N·m {0.72 to 2.89 ft.lbs, 0.1 to 0.4 kgf·m} (tangential force: 9 to 35 N {1.98 to 7.94 lbs, 0.9 to 3.6 kgf})	–	Adjust or replace
11	Anti-lock brake system rotor shakes (Assemble it into wheel hub to measure.)		0.05 {0.0020} or less	0.1 {0.0039}	Replace
13	Brake drum	Inside diameter	320 {12.59}	322 {12.67} ※ 321 {12.63}	Correct or replace
		Cylindricity	0.05 {0.0020}	0.2 {0.0079}	

※: Shows the correction limit value.

Tightening torque (Unit: N·m {ft.lbs, kgf·m})

Mark	Parts to be tightened	Tightening torque	Remarks
Ta	Brake hose	21 to 30 {15 to 22, 2.1 to 3.1}	–
Tb	Bolt (lock plate mounting)	7 to 11 {5.1 to 8, 0.7 to 1.1}	–
Tc	Lock nut	200 {145, 20}	Back-off angle 30° (1/12 of a turn)
Td	Nut (brake drum and wheel hub mounting)	322 {235, 32.8}	–
Tf	Nut (front drum brake mounting)	135 {100, 13.8}	–

Lubricant and/or sealant

Mark	Points of application		Specified lubricant and/or sealant	Quantity	
a	Pack space between rollers of bearing inner race		Wheel bearing grease [NLGI No. 2 (Li soap)]	As required	
	Lip area of oil seal				
	Pack inside of wheel hub	Wheel hub body		300 g {11 oz} ※1	Total 395 ± 20 g {14 ± 0.7 oz} ※1
		Around outer bearing		95 g {3.4 oz} ※2	
	Spindle of knuckle			95 g {3.4 oz} ※2	
	Pack outside of wheel hub (wheel cap side)			150 ± 10 g {5.3 ± 0.35 oz} ※1	
b	Wheel hub cap fitting area with wheel hub		Loctite 962T	As required	

※1: For a wheel

※2: For a wheel, either outer bearing neighborhood or knuckle spindle part

Special tools (Unit: mm {in.})

Mark	Tool name and shape	Part No.	Application
a	Hub cap wrench 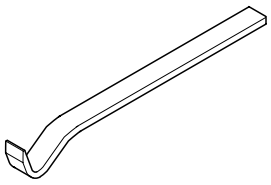 P00898	MH061948	Removal of wheel hub cap
b	Hub cap installer A: ϕ139.8 {5.50} B: ϕ123.7 {4.87} 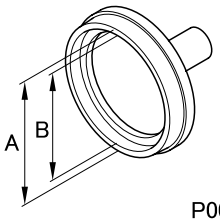 P00899	MH062204	Installation of wheel hub cap
c	Socket wrench A: ϕ65 {2.56} 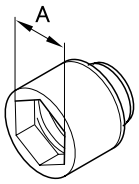 P00900	MH061531	Removal and installation of lock nut
d	Wheel hub puller A: ϕ222.25 {8.75} 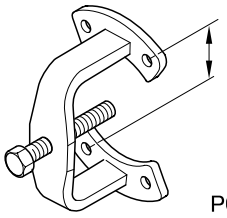 P00901	MH061966 or MH061017	Removal of hub cap and brake drum
e	Anti-lock brake system oil seal installer A: ϕ102 {4.02} 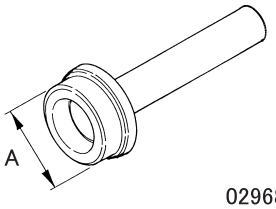 02968	MH062305	Installation of oil seal
f	Inner bearing installer A: ϕ103 {4.06} B: ϕ96 {3.78} C: ϕ91 {3.58} 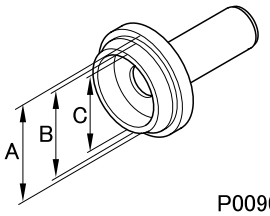 P00903	MH061974	Installation of inner bearing outer race
g	Outer bearing installer A: ϕ78.5 {3.09} B: ϕ72 {2.83} C: ϕ66 {2.60} 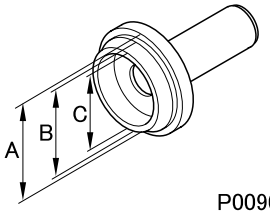 P00903	MC881484	Installation of outer bearing outer race

Mark	Tool name and shape	Part No.	Application
h	Lever A: 15 {0.59}, B: 400 {15.7} 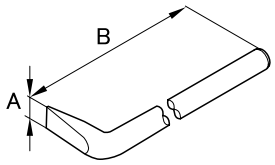 P00904	MH061683	Prying lever of knuckle and oil seal retainer
i	Gear puller 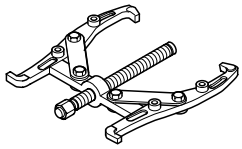 P00905	MH061102	Removal of inner bearing inner race and oil seal retainer
j	Inner bearing installer A: ϕ65 {2.56}, B: ϕ56 {2.20}, C: 164 {6.46} 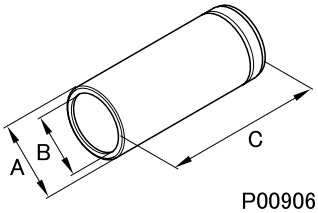 P00906	MH061475	Installation of inner bearing inner race and oil seal retainer

◆Removal procedure◆

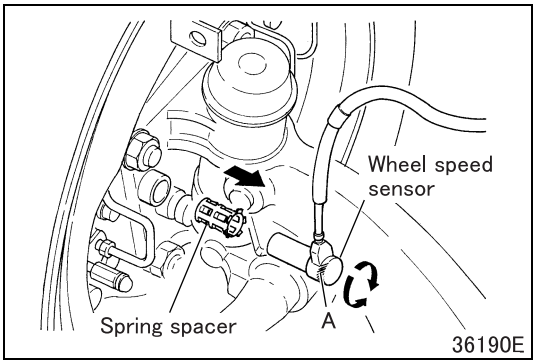

36190E

■ Removal: Wheel speed sensor and spring spacer

- Pinch diagonally shaded area A of the wheel speed sensor with pliers and remove it while turning it a little.

CAUTION ⚠

- **When pinching the wheel speed sensor with pliers, do not pinch other areas than the diagonally shaded area.**
- **When removing the wheel speed sensor, never apply excessive force to the sensor, such as hitting with a hammer, prying with a screwdriver or pulling the harness, since these actions can result in the breaking of wire.**
- **If the wheel speed sensor can be removed easily, replace the spring spacer.**

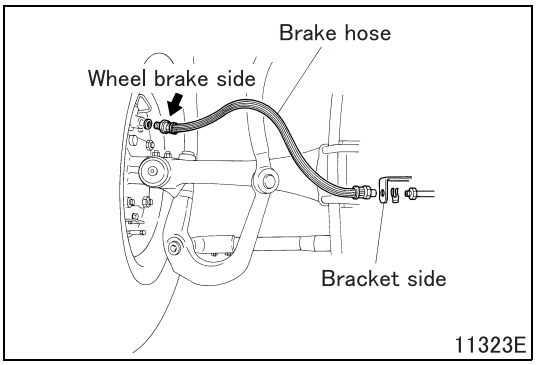

11323E

■ Removal: Brake hose

- When removing the brake hose, remove it from the bracket side (frame side) first, and then from the wheel brake side.

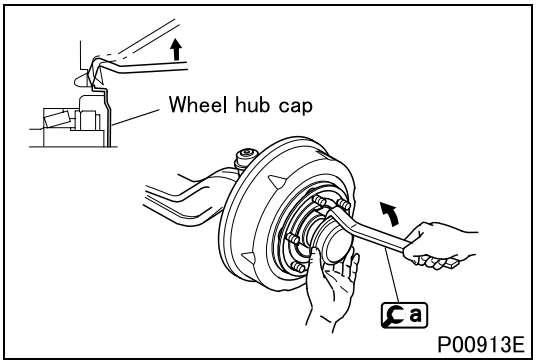

■ **Removal: Wheel hub cap**

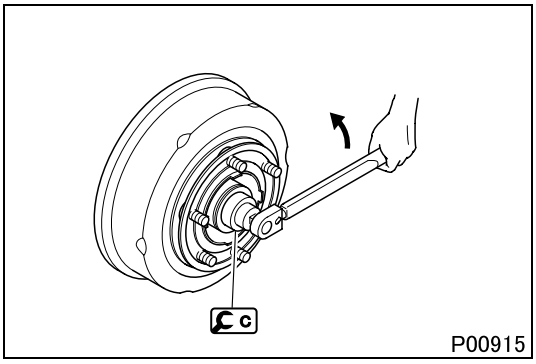

■ **Removal: Lock nut**

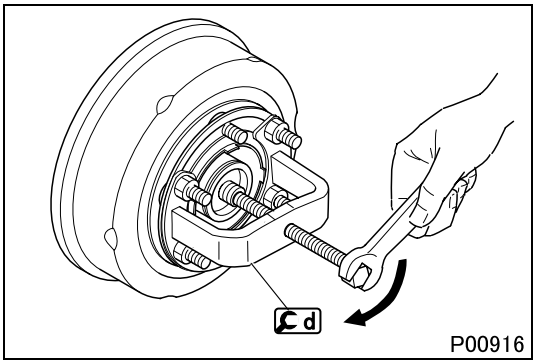

■ **Removal: Wheel hub and brake drum**

- If the brake drum has stepped wear and the wear prevents the wheel hub and brake drum from being removed, the removal can still be effected by taking the following procedure. After the removal, correct or replace the brake drum.

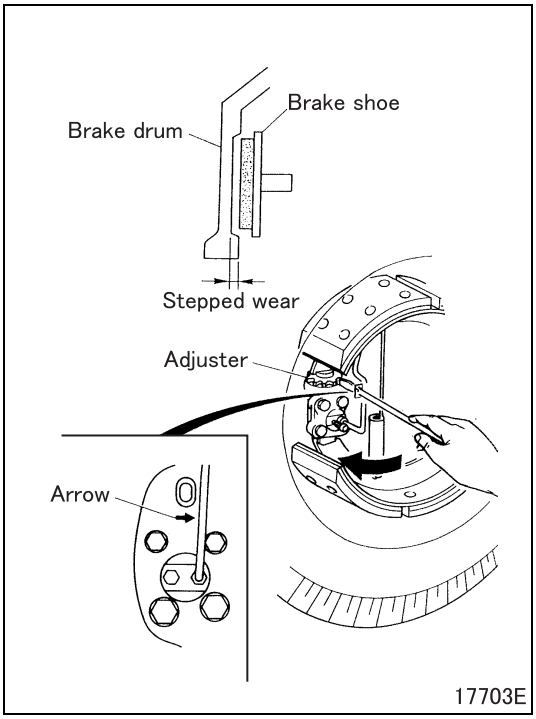

- Turn the adjuster from the adjusting hole in the opposite direction to the arrow on the backing plate to increase the clearance between the brake drum and the brake shoe. Then, remove the wheel hub and brake drum assembly.

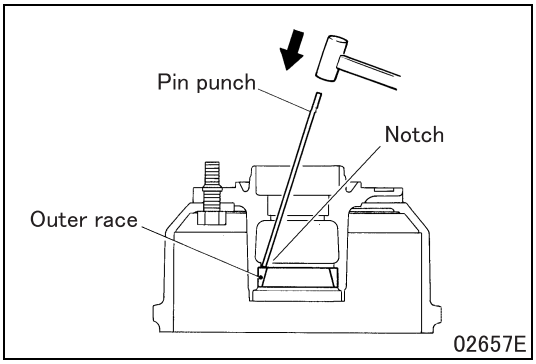

■ **Removal: Inner bearing outer race**

- Drive out the inner bearing outer race by tapping evenly at two notches in the wheel hub.

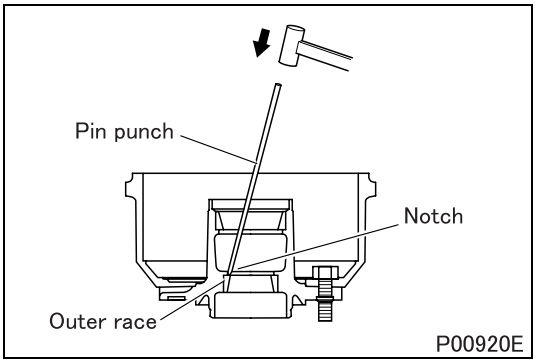

■ **Removal: Outer bearing outer race**

- Drive out the outer bearing outer race by tapping evenly at two notches in the wheel hub.

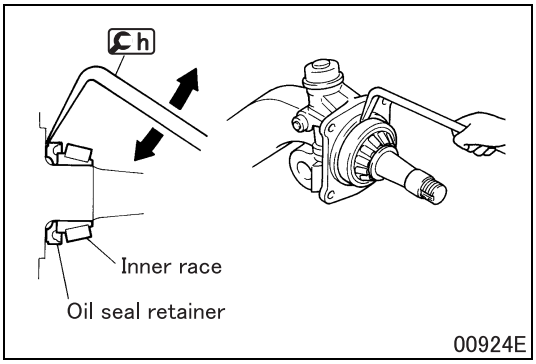

■ **Removal: Inner bearing inner race and oil seal retainer**

- Pry the oil seal retainer using h to open the clearance.

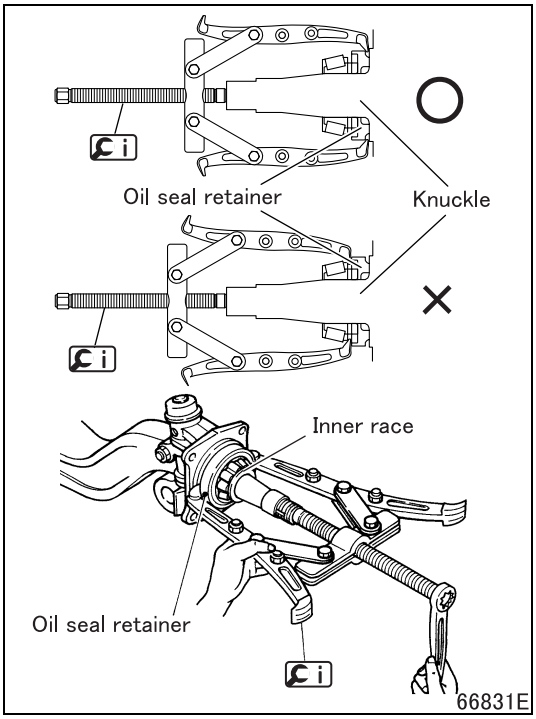

- Hook the claw of i to the clearance between the knuckle and oil seal retainer to remove.

◆Inspection procedure◆

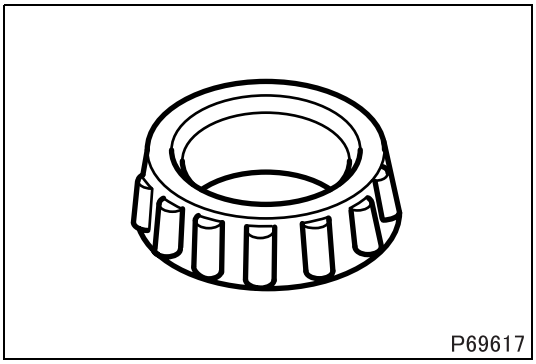

■ **Inspection: Outer bearing inner race**

- Inspect the outer bearing inner race after cleaning the bearing to remove grease completely.
- If any damage, wear, or poor rotating condition is evident in the inner race, replace it with a new one.
- The inner race and the outer race should be replaced as a set.

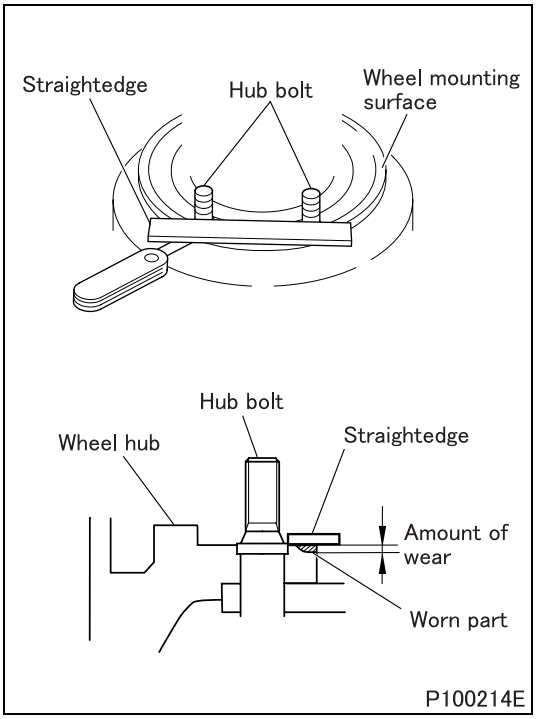

■ **Inspection: Wheel hub**

(1) Visual inspection

- Check the disc wheel mounting surface of the wheel hub by watching and touching. If there is damage or crack on it, replace the wheel hub.
- Make sure that there is not rust, dust, paint or foreign body on the disc wheel mounting surface of the wheel hub to prevent the wheel nut to loosen.
- If any abnormality is found, remove it with sandpaper.

(2) Wear in disc wheel mounting part of wheel hub

- Clean the wheel mounting surface of the wheel hub before inspection.
- Place a straightedge on the hub so as to contact to the two hub bolts on the disc wheel mounting surface.

CAUTION ⚠

- **Make sure that the straightedge does not run onto the hub bolt.**

- Using feeler gauges to measure the amount of wear at the outer periphery of the wheel hub.
  Measure the amount of wear in the area of every hub bolt.
- If the amount of wear at any point exceeds the following standard value, inspect the crack check of wheel hub.
  Wear standard value: 0.8 mm {0.031 in.}

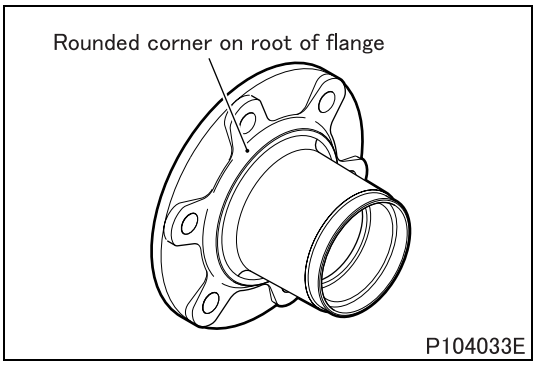

(3) Crack check

- Check if there is not crack on the entire rounded corner on the root of flange of the wheel hub by magnetic particle or liquid penetrant testing. If crack is found, replace the wheel hub.
- If crack is found on the wheel hub bolt, replace it.
- If there is crack or stepped wear on the wheel hub mounting surface of wheel disc, replace it. (See Gr31.)

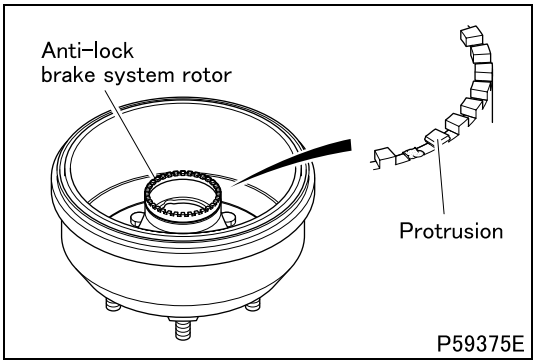

■ **Inspection: Anti-lock brake system rotor**

[Inspection]

- Check the protrusions of the anti-lock brake system rotor for chipping and flattening.
- If any abnormality is found, replace the anti-lock brake system rotor.

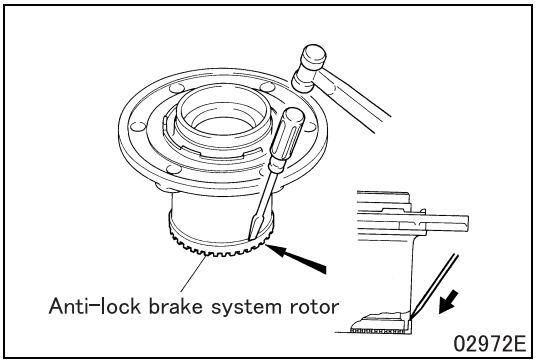

Replacement of anti-lock brake system rotor

[Removal]

- Drive out the anti-lock brake system rotor by tapping evenly at its circumference using a flat-blade screwdriver.

NOTE

- **Be careful not to damage the wheel hub.**

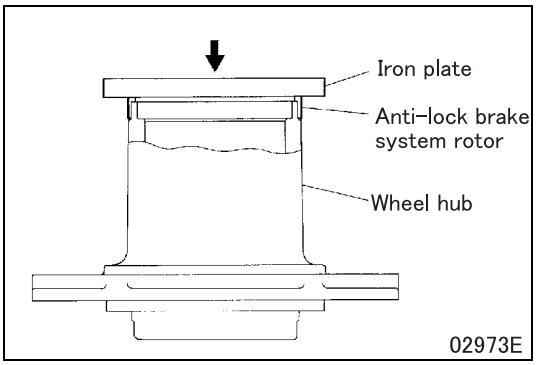

[Installation]

- Warm the anti-lock brake system rotor to approximately 150°C {302°F}, press it evenly using an iron plate, and press it into the wheel hub so that there is no clearance between the wheel hub and the anti-lock brake system rotor.

NOTE

- **When pressing, do not make dents in the rotor.**

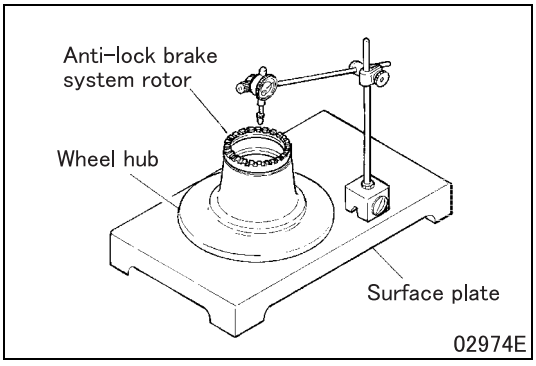

[Inspection]

- If runout is out of the standard value, reassemble.
- If runout is out of the standard value after reassembly, replace the defective part(s).

■ **Inspection: Brake drum**

- If cylindricity of the brake drum exceeds the limit or the brake drum has stepped wear and seams, cut the brake drum integrally with the wheel hub within the range of the correction limit.

■ **Inspection: Inner bearing inner race**

- Inspect the inner bearing inner race in the same manner as for the outer bearing inner race.
  (See "■ **Inspection: Outer bearing inner race**".)

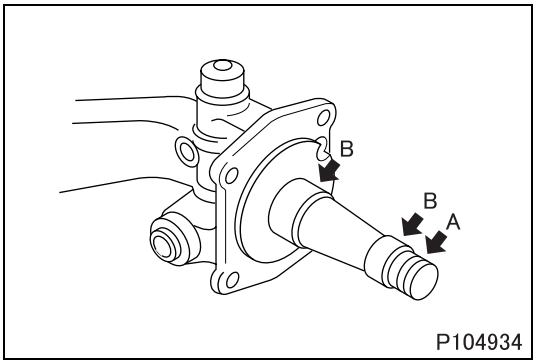

■ **Inspection: Knuckle**

- If the lock nut tightening threads (A) are damaged, repair the damage using a die to ensure accurate adjustment of starting torque.
- Replace the knuckle if it apparently has stepped, tapered, uneven or other abnormal wear or damage in the outer bearing fitting surface (B).

◆Installation procedure◆

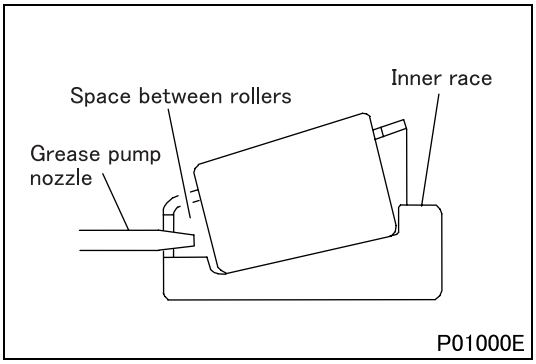

■ **Installation: Packing of grease in inner bearing inner race**

- Insert the grease pump nozzle into the space between rollers of the outer and inner bearing inner race to pack grease sufficiently.

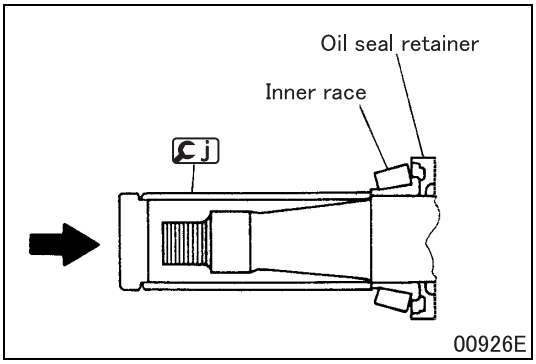

■ **Installation: Inner bearing inner race, oil seal retainer**

- Using j press-fit oil seal retainer and inner bearing inner race simultaneously.

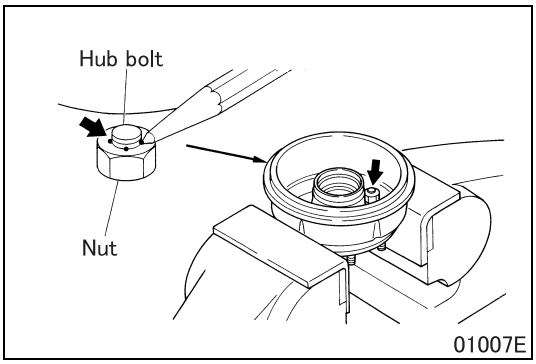

■ **Installation: Hub bolts**

- As for hub bolt, tighten nut at specified torque, and caulk at 4 positions for prevention of loosening.

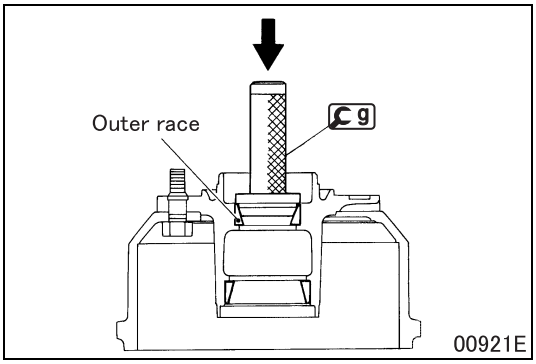

■ **Installation: Outer bearing outer race**

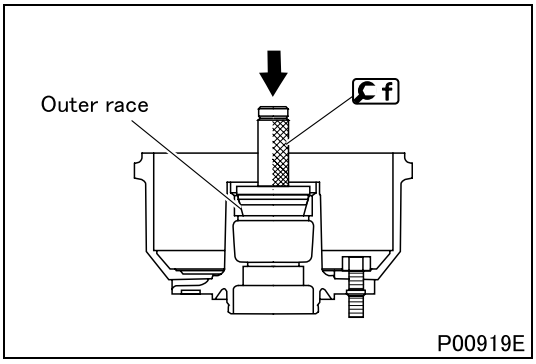

■ **Installation: Inner bearing outer race**

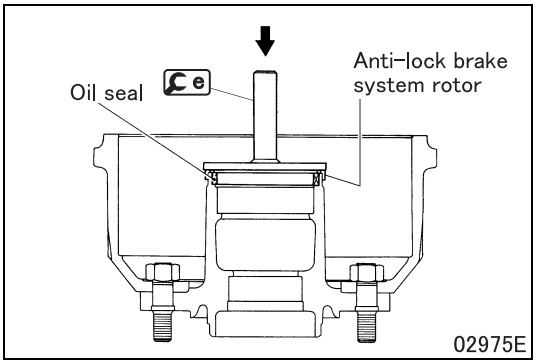

■ **Installation: Oil seal**

- Use e when press-fitting the oil seal to the wheel hub with the anti-lock brake system rotor already installed.

■ **Installation: Packing of grease in outer bearing inner race**

- Follow the same procedure as for packing the inner bearing inner race with grease.
  (See "■ **Installation: Packing of grease in inner bearing inner race**".)

■ **Installation: Packing of grease to inside of wheel hub**

- Pack grease following Manner 1 or Manner 2 shown below.

CAUTION ⚠

- **Wheel bearing seized may be caused unless following these manners.**
- **Pack the specific amount of grease measured by measurement cup or etc.**

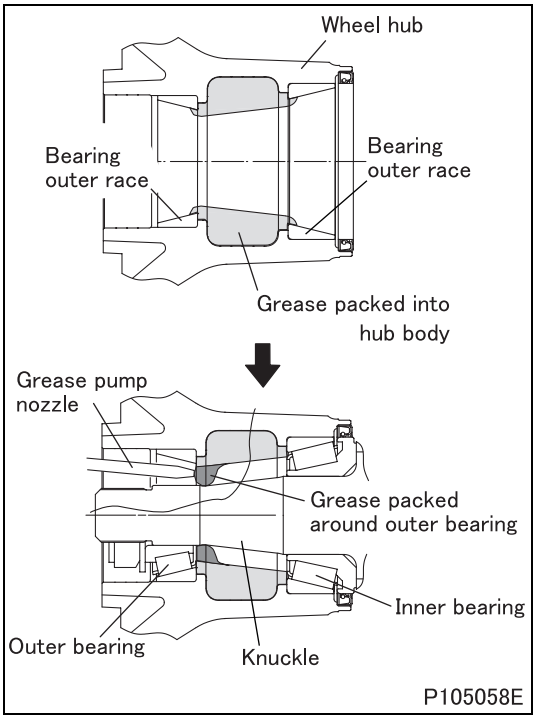

<Manner 1>

- Pack grease in the wheel hub body so much that grease covers the outer and inner bearing outer races to ensure that grease will reach the outer and inner bearings as shown in the drawing.
- After installing the wheel hub in the knuckle, insert a grease pump nozzle into the wheel hub and add grease to around the outer bearing before installing the outer bearing inner race.

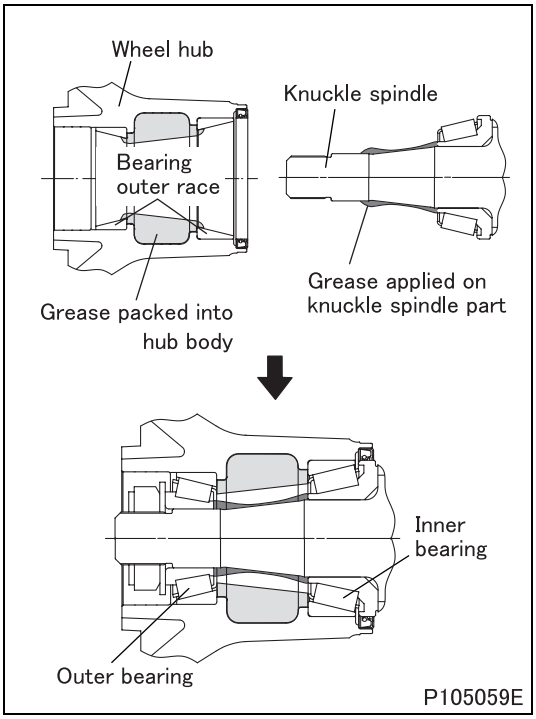

<Manner 2>

- Pack grease in the wheel hub body so much that grease covers the outer and inner bearing outer races to ensure that grease will reach the outer and inner bearings as shown in the drawing.
- Before installing the wheel hub in the knuckle, apply grease to the knuckle spindle.

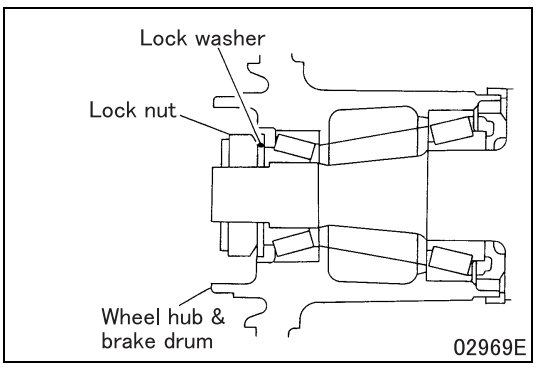

■ Adjustment: Starting torque of wheel hub bearing

CAUTION ⚠

- **Unless this adjustment procedure is performed, seizure of the wheel hub bearing can be caused.**

[Adjustment]

- Temporarily tighten the lock nut and make sure that the brake drum and brake shoe do not drag.
- If they drag, make adjustment with the adjuster of the wheel cylinder.

- Gradually tighten the lock nut while turning the wheel hub and brake drum. Tighten the lock nut so that the specified torque is achieved when the wheel hub and brake drum are turned three times or more.

CAUTION ⚠

- **Do not tighten the lock nut without turning the wheel hub and brake drum, or tighten it to the specified torque within three turns. Failure to observe the above will make the installed condition of the inner bearing faulty, causing poor rotation and seizure.**

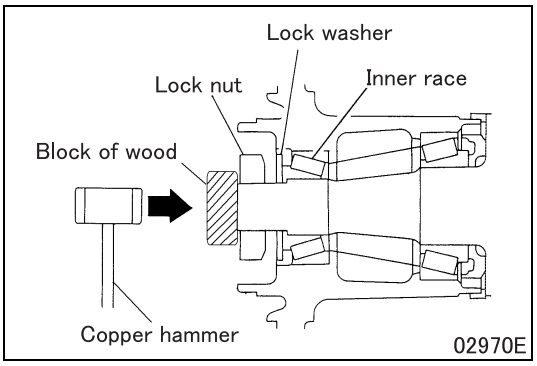

- Perform the following work to pull the outer bearing inner race toward the lock nut side.
- Loosen the lock nut to create clearance between the outer bearing inner race and lock nut.
- Apply a block of wood to the end face of the axle housing, and tap it two or three times while turning the wheel hub and brake drum.

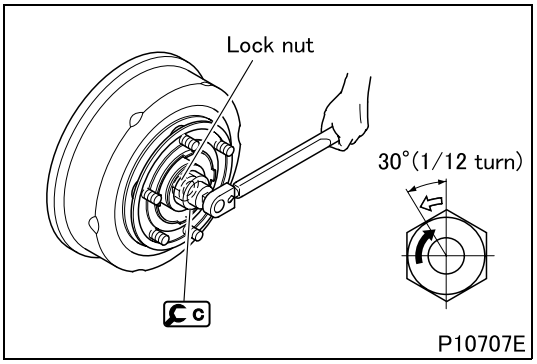

★• Tighten lock nut at specified torque, and after it, return to the loosening direction as shown by the amount of 30 degrees (1/12 turn).

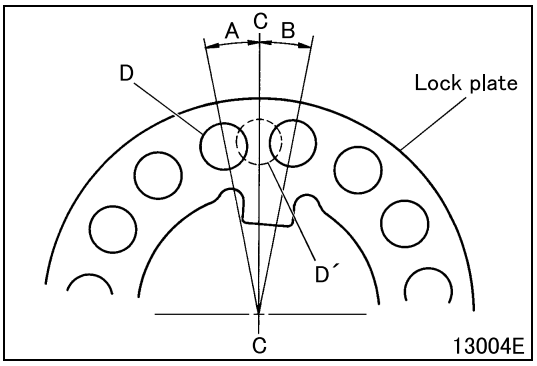

- Fit the lock plate into place and check to ensure that all of the mounting holes in the lock nut and the lock plate are in alignment, and tighten the mounting bolts.
- If the mounting holes of the lock nut and the lock plate are out of alignment, align them by the procedures shown in the following table.

Lock nut hole position	How to align lock plate hole
Range A	Loosen lock nut and align holes.
Range B	Turn over lock plate, loosen lock nut and align holes.
On line C–C	Turn over lock plate and align holes. (Hole position changes from D´ to D.)

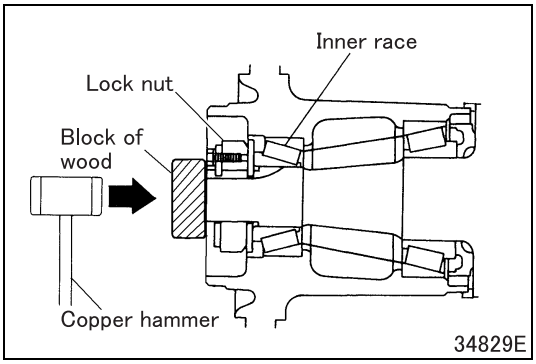

- Perform the following work to pull the outer bearing inner race toward the lock nut side again.
- Apply a block of wood to the end face of the axle housing, and tap it two or three times while turning the wheel hub and brake drum.
- Make sure that there is no looseness in the axial direction.
- Perform a measurement again after adjustment. If the measured value is out of the standard value, repeat the work from the item marked with ★, since adjustment of the lock nut may be insufficient.
- If the result is found to be abnormal, replace the outer and inner bearings.

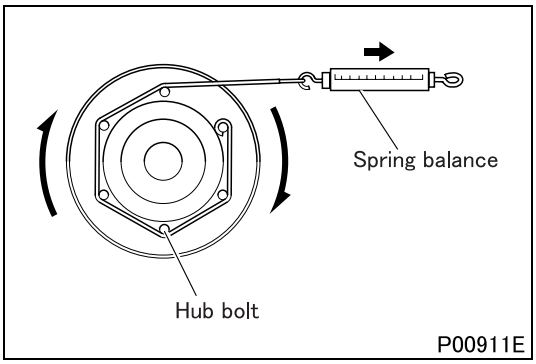

[Inspection]

- After assembly of the lock nut, fasten a spring balance to hub bolt and measure tangential force.
- If the tangential force meets the specified value, the starting torque will become the standard value.
- If the measurement deviates from the specified value, repeat the work from the item marked with ★, since adjustment of the lock nut may be insufficient.
- If the result is found to be abnormal, replace outer and inner bearings.

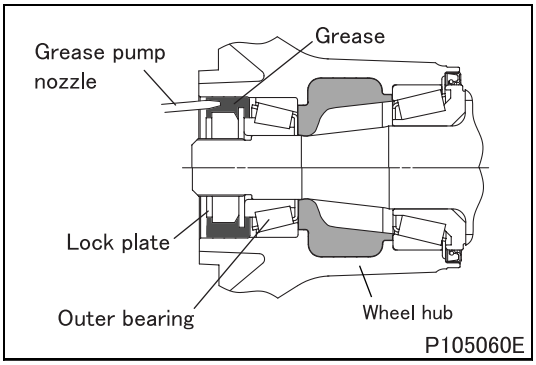

■ Installation: Packing of grease in outside of wheel hub

CAUTION ⚠

- **Unless this packing procedure is performed, seizure of the wheel hub bearing can be caused.**
- **For a grease amount, pack the specified amount using a measuring cup.**

- Pack grease up to the lock plate using a grease pump nozzle so that a wall is formed outside the outer bearing as shown in the illustration.

CAUTION ⚠

- **Do not pile grease in the wheel hub cap. Otherwise, grease does not reach the outer bearing, causing poor lubrication of the bearing.**

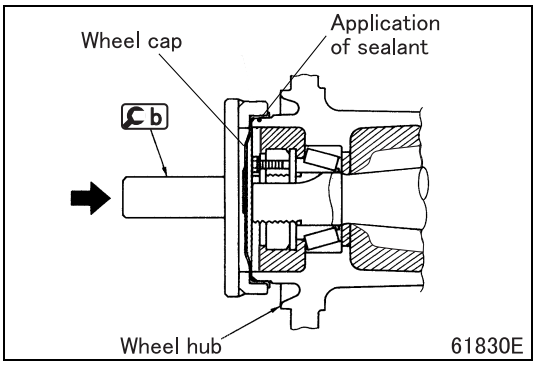

■ Installation: Wheel hub cap

- Apply sealant to the wheel hub cap fitting surface with the wheel hub, and press the wheel hub cap in the wheel hub using b.

CAUTION ⚠

- **Adhesion of grease to the fitting surface with the wheel hub causes water entry and grease leakage.**
- **If the wheel hub cap is tapped with a hammer for installation, the fitting surface is deformed, impairing waterproof effect.**

■ **Installation: Brake hose**

- To install the brake hose, follow the removal procedure in reverse. (See "■ **Removal: Brake hose**".)
- After installing, make sure that the brake hose does not interfere in the peripheral parts.

CAUTION ⚠

- **Make sure that the brake hose is not twisted when installing it.**

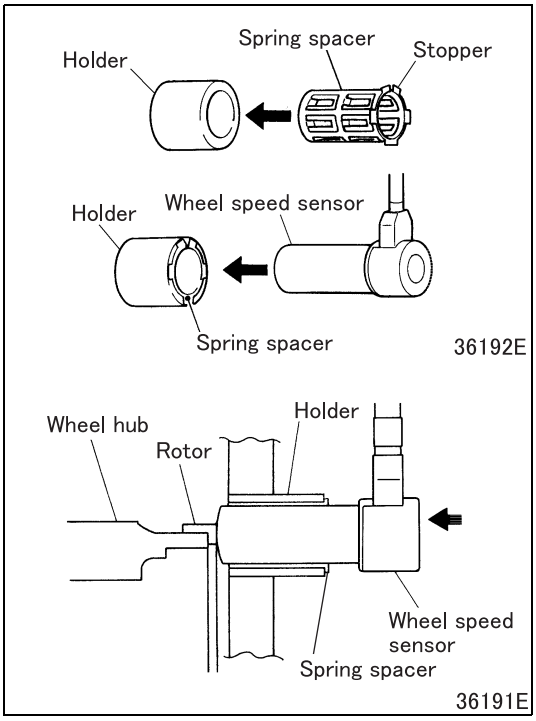

■ **Installation: Wheel speed sensor and spring spacer**

- Insert the spring spacer into the holder of the knuckle and press it in until its stoppers knock against the holder.
- Insert the wheel speed sensor and press it in until it knocks against the rotor with tactile feel.
- Slowly turn the wheel hub and brake drum two or three times (2 seconds per turn) to make sure that they turn smoothly.

CAUTION ⚠

- **When installing the wheel speed sensor, never apply excessive force to the sensor, such as hitting with a hammer, prying with a screwdriver or pulling the harness, since these actions can result in the breaking of wire.**

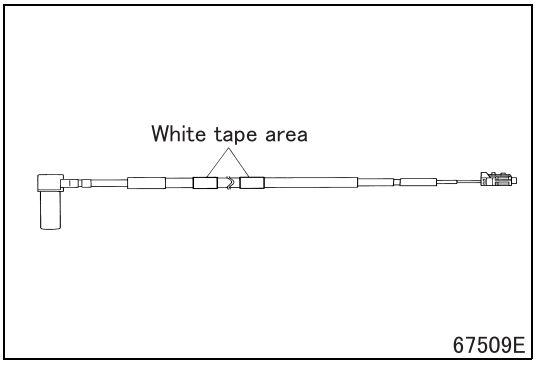

■ **Installation: Harness of wheel speed sensor**

- Be sure to secure clip positions of the wheel speed sensor harness at the white tape area to avoid interference with other parts, twist and slack.

FRONT AXLE, KNUCKLE AND KINGPIN

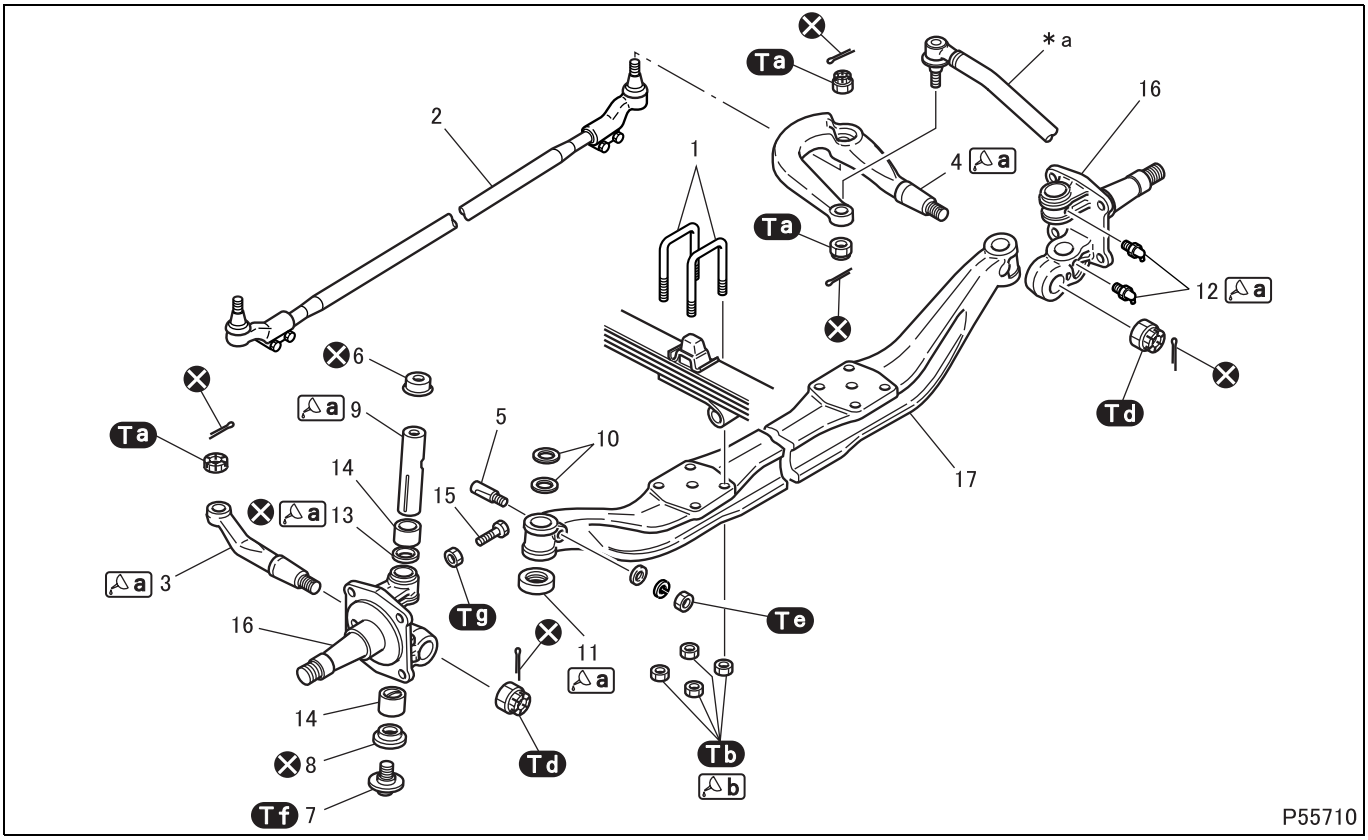

● **Disassembly sequence**

1 U-bolt
2 Tie rod (See later section.)
3 Tie rod arm
4 Knuckle arm
5 Set bolt
6 Upper cap
7 Lower cover
8 Dust seal
9 Kingpin
10 Thrust washer
11 Thrust bearing
12 Grease nipple
13 Oil seal
14 Bushing
15 Knuckle stopper bolt
16 Knuckle
17 Front axle

***a**: Drag link
⊗: Non-reusable parts

CAUTION ⚠

- **Do not damage the dust cover of the tie rod when removing the tie rod. Damaging the dust cover may cause water infiltration and wear-out at the early stage.**

NOTE

- **Kingpin may have a blackened surface, but this is due to transcription of the resin of bushing and does not present any problem.**

● **Assembly sequence**

Follow the disassembly sequence in reverse.

Repair kit: Kingpin kit

Service standards (Unit: mm {in.})

Location	Maintenance item		Standard value	Limit	Remedy
9	Outer diameter of kingpin		34.985 to 34.998 {1.377 to 1.378}	34.9 {1.374}	Replace
9, 14	Clearance between kingpin and bushing		0.02 to 0.06 {0.00079 to 0.0024}	0.15 {0.0059}	Replace
9, 17	Clearance between kingpin and axle		0.002 to 0.04 {0.00008 to 0.0157}	0.1 {0.0039}	Replace
14	Inner diameter of bushing (after having been pressed into knuckle)		35.018 to 35.045 {1.378 to 1.379}	–	Replace
16, 17	Vertical clearance between knuckle and front axle		0.1 {0.0039} or less	0.20 {0.0079}	Adjust
17	Front axle	Horizontal bend	2.5 {0.098} or less	7 {0.28}	Replace
		Vertical bend	3 {0.12} or less	7 {0.28}	
		Kingpin inclination angle	7° ± 30’	–	

Tightening torque (Unit: N·m {ft.lbs, kgf·m})

Mark	Parts to be tightened	Tightening torque	Remarks
Ta	Nut (drag link mounting)	190 ± 47.5 {140 ± 35, 19.4 ± 4.85}	–
	Nut (tie rod mounting)		
Tb	Nut (U-bolt mounting)	204 to 278 {150 to 205, 20.8 to 28.2}	Wet
Td	Nut (tie rod arm and knuckle arm mounting)	686 ± 98 {505 ± 72, 70 ± 10}	–
Te	Nut (set bolt mounting)	29 {22, 3}	–
Tf	Lower cover	39 ± 10 {29 ± 7, 4 ± 1}	–
Tg	Lock nut (knuckle stopper bolt mounting)	71 ± 12 {53 ± 9.4, 7.3 ± 1.3}	–

Lubricant and/or sealant

Mark	Points of application	Specified lubricant and/or sealant	Quantity
a	Thread areas of tie rod arm and knuckle arm	Wheel bearing grease [NLGI No. 2 (Li soap)]	As required when parts are reused
	Outer surface of kingpin and fill through-hole		As required
	Pack inside of bearing		
	Packing from grease nipple		Until grease starts overflowing from dust plug
	Oil seal lip		As required
b	Nut thread	Chassis grease [NLGI No.1 (Li soap)]	As required

Special tools (Unit: mm {in.})

Mark	Tool name and shape	Part No.	Application
Ca	Kingpin set bolt remover 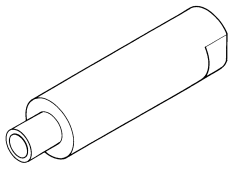 00938	MH061688	Removal of set bolt

Mark	Tool name and shape	Part No.	Application
b	Kingpin puller 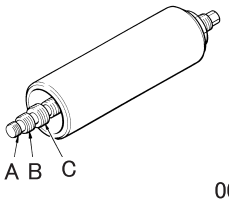 00939 A: M16 × 1.5, B: M22 × 1.5, C: M27 × 1.5	MH061684	Removal of kingpin
c	Oil seal installer A: ϕ35 {1.38} 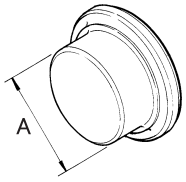 00940	MH062201	Installation of oil seal
d	Kingpin bushing remover A: ϕ33 {1.30}, B: ϕ35 {1.38}, C: ϕ38.5 {1.52} 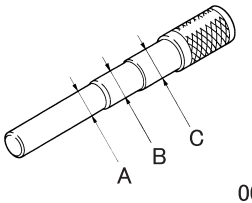 00941	MH061037	Removal of oil seal and removal and installation of bushing

◆Removal procedure◆

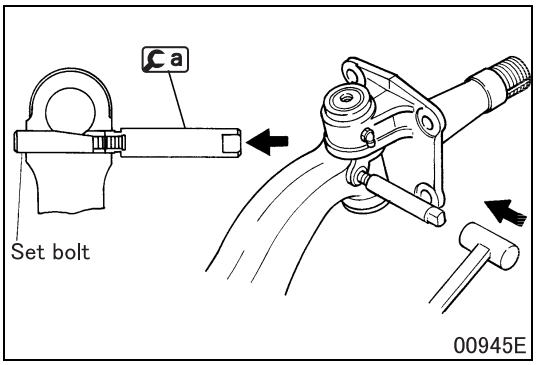

00945E

■ **Removal: Set bolt**

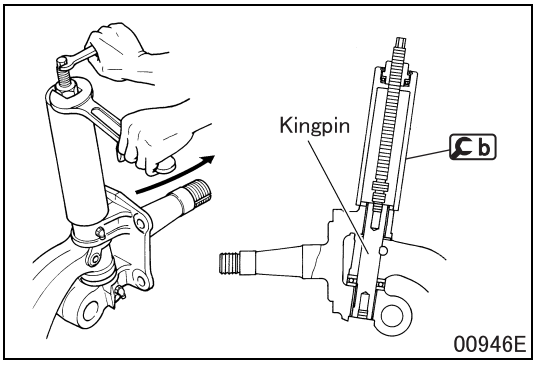

00946E

■ **Removal: Kingpin**

- Screw b into the kingpin threads to remove the kingpin.

◆Inspection procedure◆

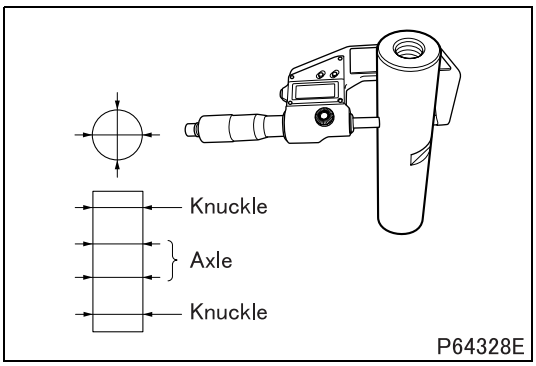

■ **Inspection: Outer diameter of kingpin**

- Take measurement at a total four levels on the kingpin: two levels for the axle fitting portion and one level each for the upper and lower knuckle fitting portions.
- If the measured value is under the limit, replace the kingpin with a new one.

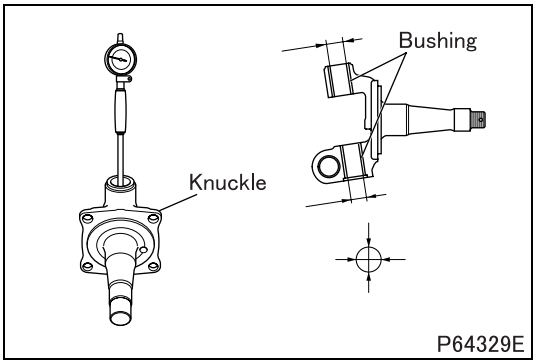

■ **Inspection: Clearance between kingpin and bushing**

- Measure the inner diameter of the upper and lower bushings using a cylinder gauge and calculate the clearance deducting the outer diameter of the kingpin from the inner diameter of the bushing.
  If the clearance exceeds the limit, replace the bushings with new ones.

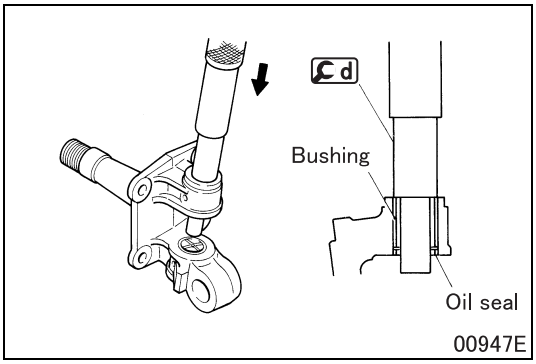

Replace of bushing
[Removal]

- Remove the bushing and the oil seal at the same time using d.

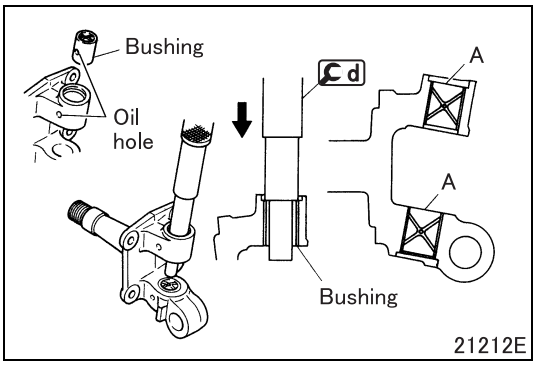

[Installation]

- Install bushing in with oil hole aligned to oil hole of knuckle, until end surface A becomes flush with knuckle end surface.

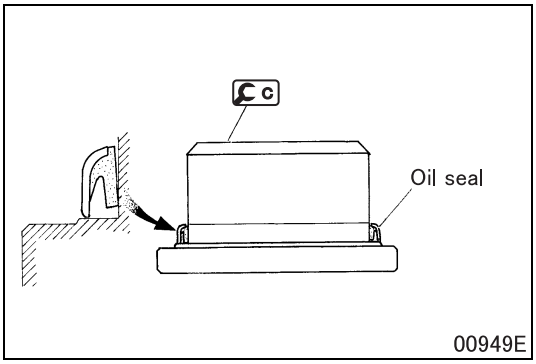

- Apply grease to lip area of oil seal, and set oil seal on C.

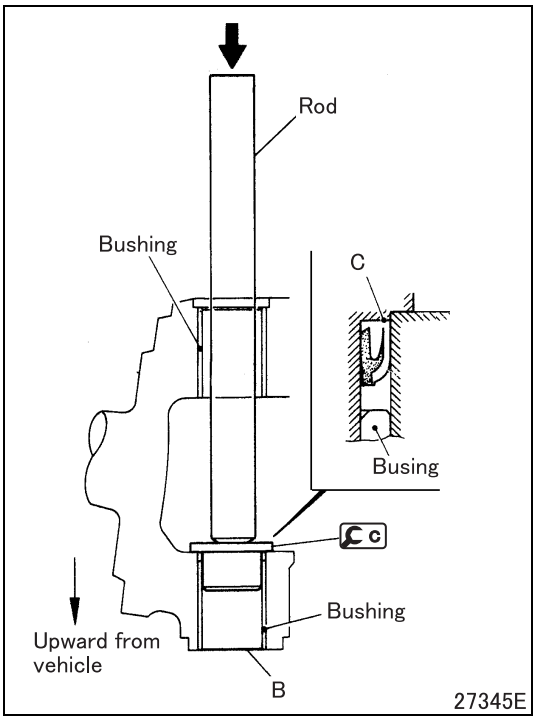

- Next, install C on the knuckle in the illustrated direction.
- Insert rod into kingpin hole, and attach it to C.
- Hit the head using a hammer until C comes to rest at knuckle.
- Make sure that end of bushing at B is flush with knuckle surface.
- End surface of oil seal at C shall not be protruding from knuckle.

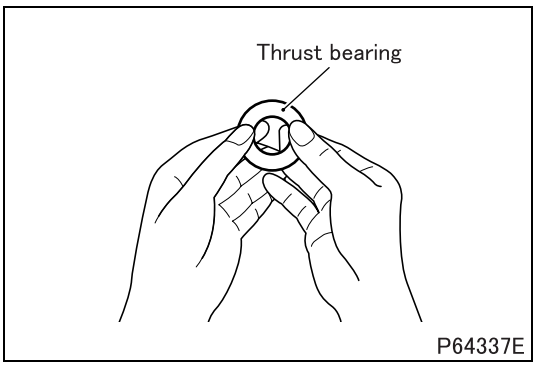

■ Inspection: Thrust bearing

- Inspect the aspect and smooth turning of the thrust bearing. If any crack, damage, or un-smooth turning is found, replace the thrust bearing with a new one.

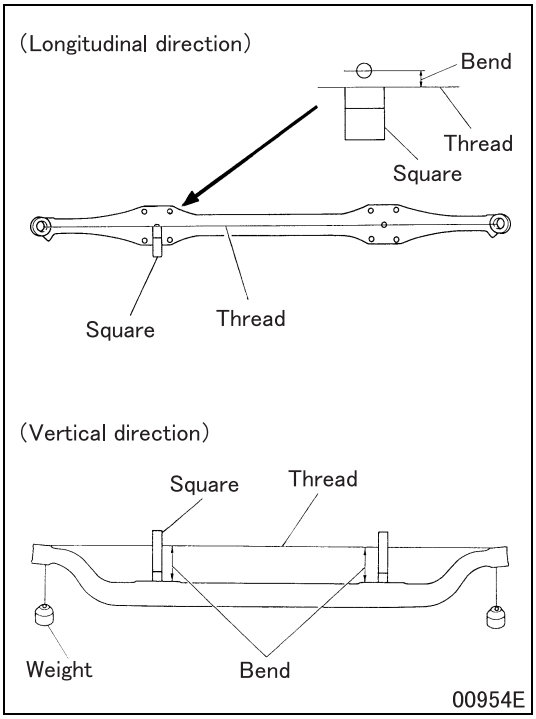

■ **Inspection: Front axle**

(1) Bend of front axle in the logitudinal direction and vertical direction

- Put a piece of thread through kingpin holes of the front axle and hang weights at both ends.
- Use a square to find bend to each of longitudinal and vertical directions.
- If the measured value exceeds the limit, replace the front axle.

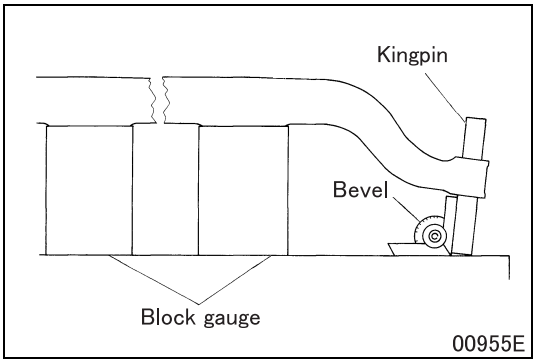

(2) Kingpin inclination angle

- Set the kingpin on the front axle as illustrated to measure the angle.
- If the measured value deviates from the standard value, replace the front axle.

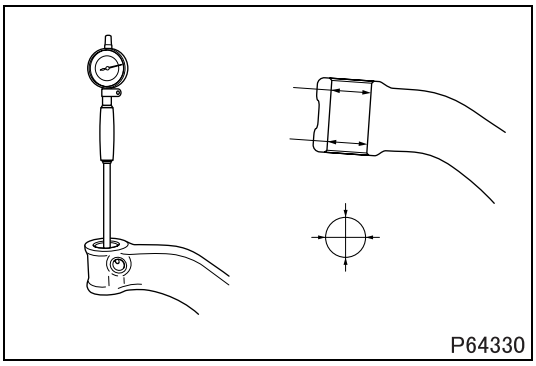

(3) Clearance between kingpin and front axle

- Measure the inner diameter of the axle's hole where the kingpin is inserted using a cylinder gauge and calculate the clearance deducting the outer diameter of the kingpin from the inner diameter.
  If the clearance exceeds the limit, replace the axle or the kingpin with a new one.

◆Installation procedure◆

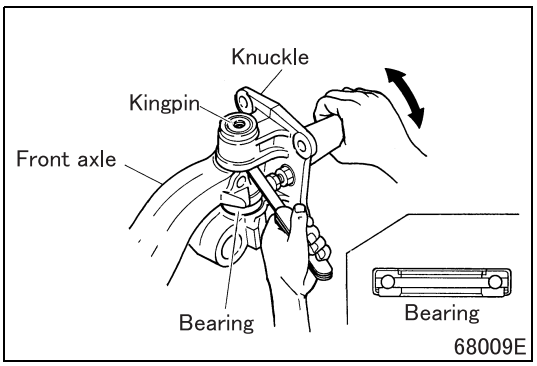

■ **Inspection: Thrust washer, bearing, knuckle and front axle**

[Inspection]

- Provisionally assemble kingpin and bearing, move 2 or 3 times knuckle to have them fit.
- Measure clearance between front axle upper surface and knuckle downside.
- Adjust if the measured value exceeds the limit.

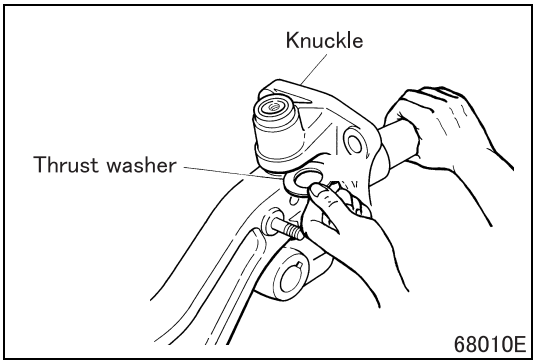

[Adjustment]

- Kinds of adjusting thrust washers
  2.1 to 2.8 mm {0.083 to 0.110 in.} (8 kinds with every 0.1 mm {0.0039 in.} difference)
- Select a thrust washer so as to make clearance as small as possible.
- After assembly, make sure that the knuckle moves smoothly.

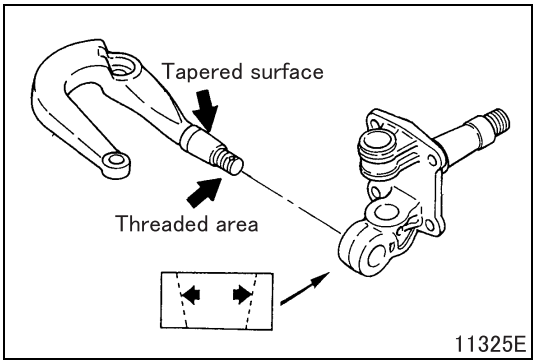

■ **Installation: Knuckle arm and knuckle**

(1) In the case of reassembling any one or both of knuckle arm and knuckle

- Polish the entire tapered surfaces of knuckle arm and knuckle evenly by means of sand paper #120 or above until sand paper score is visible on polished surfaces. (This does not apply to new replacement parts.)
- Clean tapered surfaces of knuckle arm and knuckle, and threaded area of knuckle arm screw.

NOTE

- **Use acetone, cleaning fluid for color check, or equivalent as solvent.**

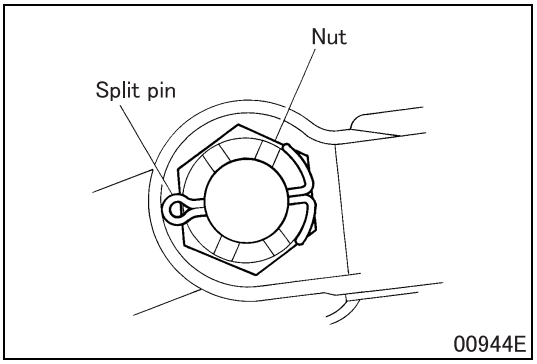

- Apply grease to threaded area of knuckle arm screw and assemble.

CAUTION ⚠

- **Upon assembling, keep off grease from tapered areas of knuckle and knuckle arm.**

- Tighten nut at specified torque, align pin holes in the course of tightening without fail, insert split pin, and secure it.

(2) When both of knuckle arm and knuckle for assembling are new parts

- Clean tapered surfaces and threaded area of knuckle arm and knuckle.
- Tighten new nut at specified torque, align pin holes in the course of tightening without fail, insert split pin, and secure it.

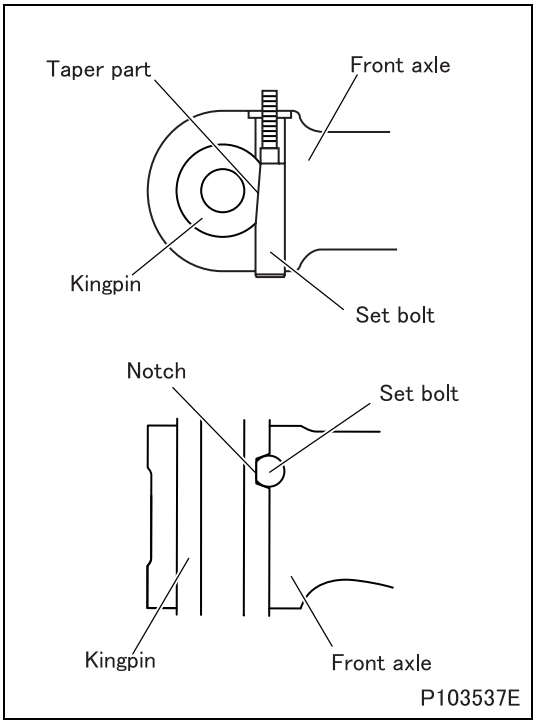

■ **Installation: Set bolt**

- Install the set bolt so that the taper part of the set bolt is aligned with the notch of the kingpin.

◆Work after assembly◆

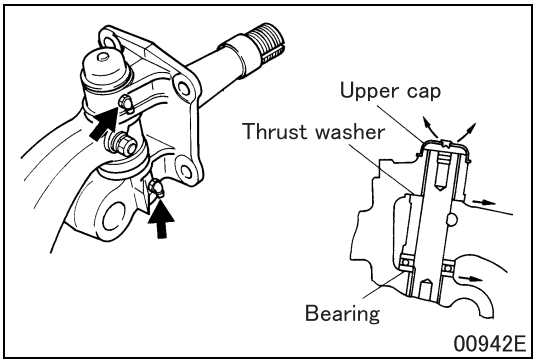

■ **Greasing: Grease nipple**

- Supply grease through the grease nipple of the knuckle.
- Supply grease until it overflows from the dust plug of the upper cap, thrust washer and press portion of the bearing.

TIE ROD

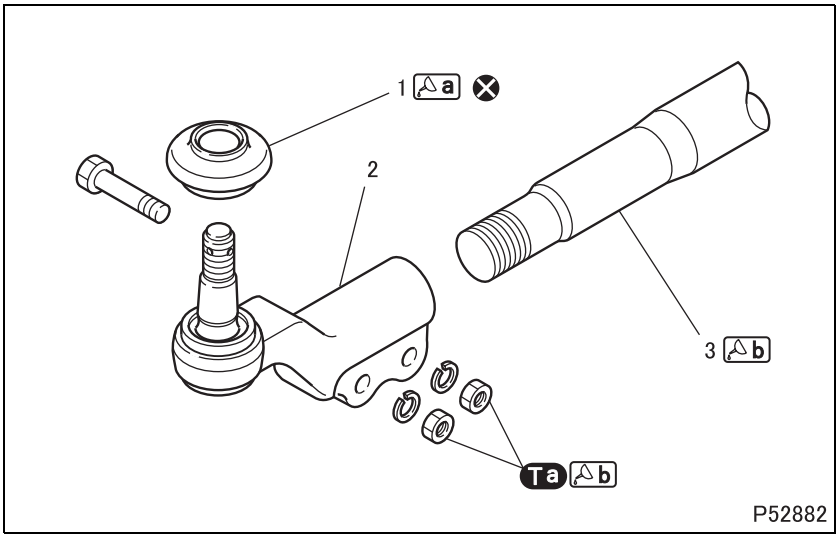

● **Disassembly sequence**

1 Dust cover
2 Tie rod end
3 Tie rod

⊗: Non-reusable parts

● **Assembly sequence**

Follow the disassembly sequence in reverse.

NOTE

- **Do not disassemble the tie rod end, as it is of non-disassembly type.**

Service standards (Unit: mm {in.})

Location	Maintenance item		Standard value	Limit	Remedy
2	Ball joint of tie rod end	Play (± 2000 N {± 450 lbs, ± 204 kgf} loaded)	0 to 0.2 {0 to 0.008}	–	Replace
		Rotation torque	0.5 to 8 N·m {0.4 to 5.9 ft.lbs, 0.05 to 0.82 kgf·m}	–	
3	Bend of tie rod		–	2 {0.079}	Correct or replace

Tightening torque (Unit: N·m {ft.lbs, kgf·m})

Mark	Parts to be tightened	Tightening torque	Remarks
Ta	Nut (tie rod end tightening)	82 ± 8 {60 ± 5.9, 8.4 ± 0.8}	Wet

Lubricant and/or sealant

Mark	Points of application	Specified lubricant and/or sealant	Quantity
a	Lip area of dust cover	Molybdenum disulfide grease [NLGI No.2 (Li soap)]	As required
	Pack inside of the dust cover		13 to 14 g {0.46 to 0.49 oz}
b	Nut thread	Chassis grease [NLGI No.1 (Li soap)]	As required
	Thread of tie rod		

Special tools (Unit: mm {in.})

<table>
<tr><th>Mark</th><th>Tool name and shape</th><th>Part No.</th><th>Application</th></tr>
<tr><td>a</td><td>Dust cover installer
<table><tr><th>A</th><th>B</th><th>C</th></tr><tr><td>ϕ60.3
{2.37}</td><td>ϕ45
{1.77}</td><td>80
{3.15}</td></tr></table> 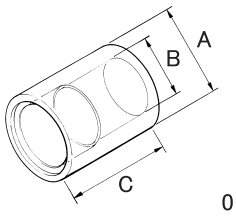
01444</td><td>MH061828</td><td rowspan="2">Installation of dust cover</td></tr>
<tr><td>b</td><td>End holder
 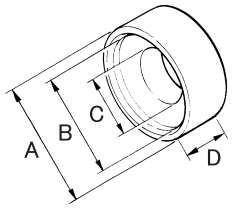
01445
<table><tr><th>A</th><th>B</th><th>C</th><th>D</th></tr><tr><td>ϕ60
{2.36}</td><td>ϕ50.5
{1.99}</td><td>ϕ35
{1.38}</td><td>25
{0.98}</td></tr></table></td><td>MH061830</td></tr>
</table>

◆Inspection procedure◆

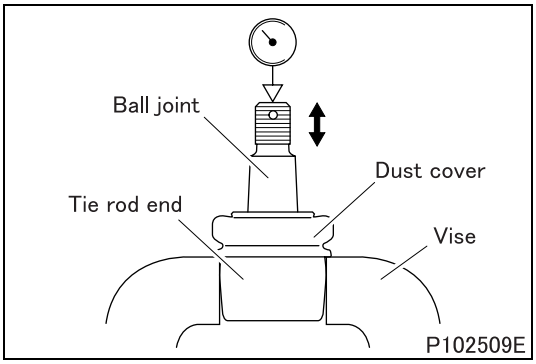

P102509E

■ Inspection: Tie rod end

(1) Play

- Fix the tie rod end with a vise.

CAUTION ⚠

- **Take care not to deform or damage the dust cover when fixing it with a vise.**

- The position of the ball joint with applying no load is adjusted to standard position.
- Measure each play of the ball joint with applying the specified push and pull load from the standard position.
- Total each play and if the total deviates from standard value, replace the tie rod end.

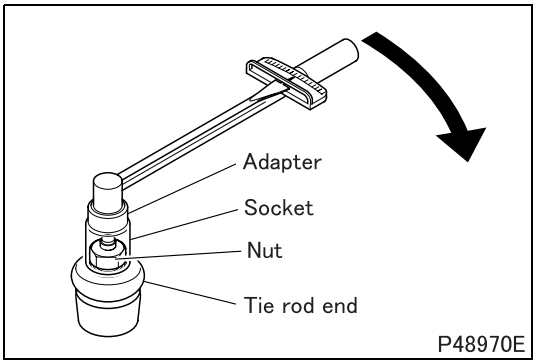

P48970E

(2) Rotation torque

- Install the tie rod mounting nut on the tie rod end.
- Install the socket, adapter and torque wrench to measure the rotation torque.
- If the measured value deviates from the standard value, replace the tie rod end.

(3) Dust cover

- Check that there are no wear, cracks or damage. These abnormalities can cause water to enter the ball joint, resulting in premature wear.
- If wear, crack, or damage is present, inspect traces of water entry and occurrence of rust in the ball joint. If any abnormality is found, replace the tie rod end. If no abnormality is found, replace the dust cover and reapply grease.

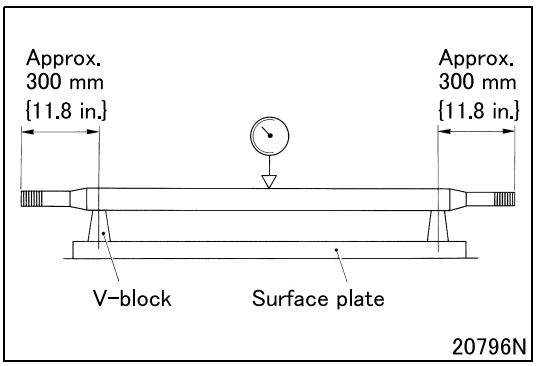

■ **Inspection: Bend of tie rod**

- Measure the bend of the tie rod at its center.

NOTE

- **Give the tie rod one complete turn and read the dial gauge at this time. The bend is one half of the reading.**

- If the measured value exceeds the limit, correct or replace the tie rod.

◆Installation procedure◆

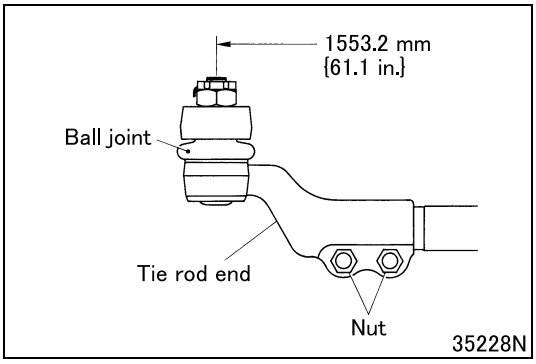

■ **Installation: Tie rod end**

- Install the tie rod end on the tie rod so that the distance between centers of the ball joint of tie rod ends is to the illustrated dimension, and tighten nuts to the specified torque.

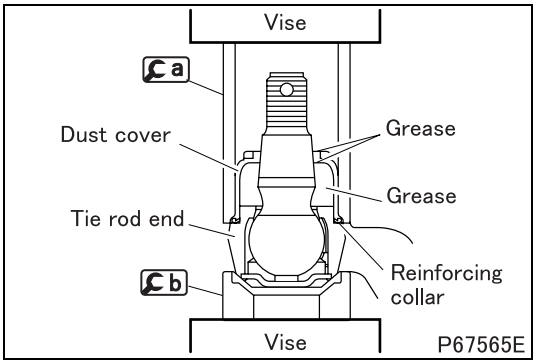

■ **Installation: Dust cover**

- Seal grease in the inside of the dust cover and apply grease to the lip area. Cover the dust cover and tie rod end with a and b as illustrated, and press them using a vise so that the reinforcing collar is brought into intimate contact with the tie rod end.

NOTE

- **Install the dust cover so that it is vertical.**

Group 26B

Front Axle <FK62, FK65, FM>

Table of Contents

Back

Home

MITSUBISHI FUSO TRUCK OF AMERICA, Inc.

Pub.No.TWME0709-26B

INDEX

SPECIFICATIONS 26B-2

STRUCTURE AND OPERATION
1. **Wheel Hub and Brake Drum 26B-3**
2. **Front Axle, Knuckle and Kingpin..... 26B-4**

TROUBLESHOOTING 26B-5

ON-VEHICLE INSPECTION AND ADJUSTMENT
1. **Inspection and Adjustment of Wheel Alignment 26B-6**
2. **Inspection and Adjustment of Steering Angle 26B-10**
3. **Inspection of Side Slip 26B-10**
4. **Inspection of Tie Rod End Ball Joint 26B-11**
5. **Inspection of Wheel Bearing for Play 26B-11**
6. **Inspection of Knuckle Joint for Play 26B-11**

WHEEL HUB AND BRAKE DRUM 26B-12

FRONT AXLE, KNUCKLE AND KINGPIN
- **<FK> 26B-28**
- **<FM> 26B-36**

TIE ROD 26B-44

SPECIFICATIONS

Item			Specifications	
			FK	FM
Front axle	Model		F060T	F070T
	Type		Reverse Elliot, “I” beam	
Kingpin outer diameter × length		mm {in.}	45 × 221 {1.77 × 8.70}	50 × 243 {1.97 × 9.57}
Tread (dimension notified to the authorities)		mm {in.}	1885 {74.2}	1920 {75.6}
Mass		kg {lb}	Approx. 320 {705}	Approx. 395 {871}

1. Wheel Hub and Brake Drum

<FK>

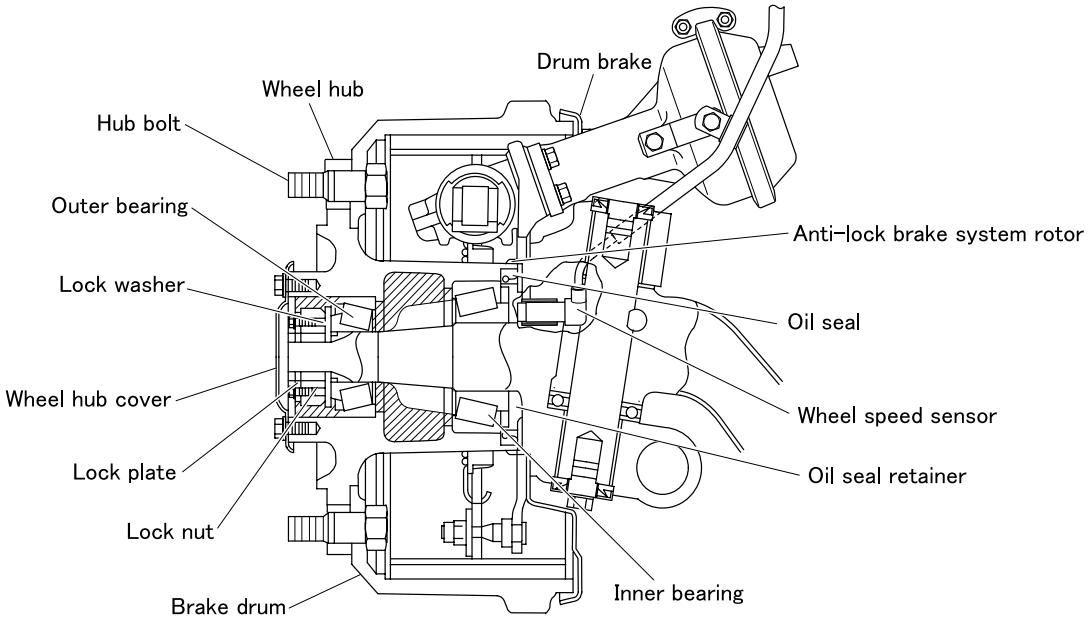

<FM>

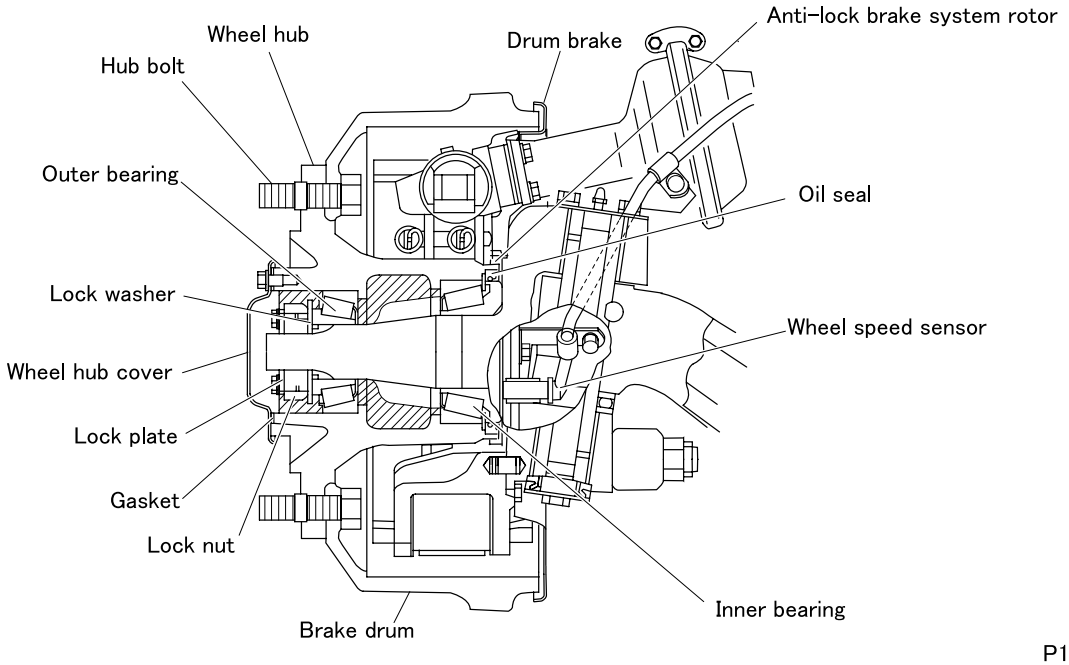

P105065E

2. Front Axle, Knuckle and Kingpin

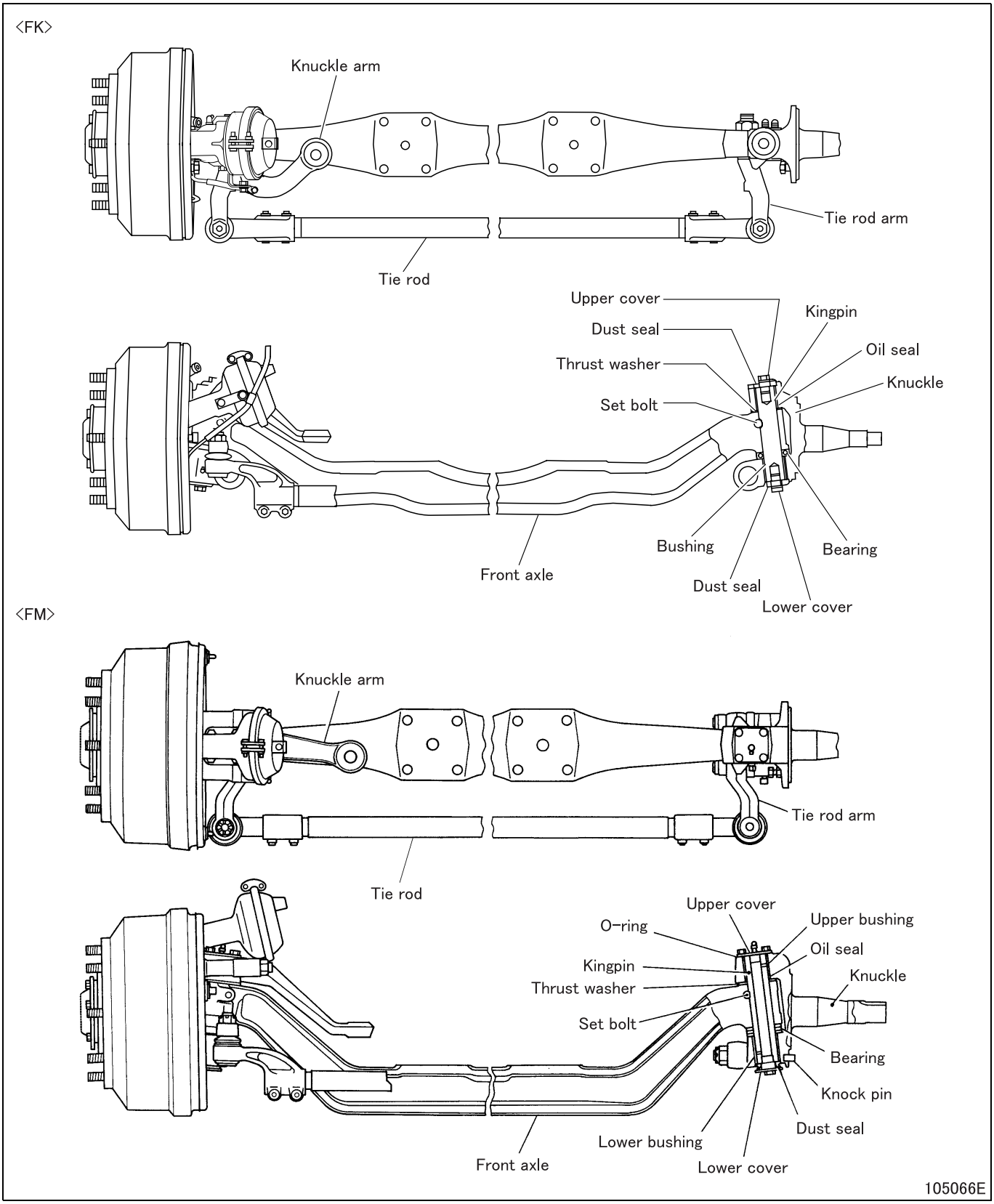

Possible causes \ Symptoms		Continuous noise while cruising	Intermittent noise while cruising	Steering wheel shakes	Steering feels stiff	Steering wheel return poor	Unable to steer the steering wheel	Steering pulls to one side	Uneven wear or early wear of front tires	Reference Gr
Wheel hub, knuckle and kingpin, front axle	Wheel alignment misaligned			O	O	O			O	
	Steering angle adjustment faulty						O			
	Wheel hub bearing seized, worn or rotation faulty	O		O						
	Wheel hub bearing broken		O							
	Kingpin worn			O						
	Clearance between kingpin and bushing excessive			O	O					
	Greasing to kingpin insufficient				O					
	Kingpin bearing seized, worn or rotation faulty				O					
	Vertical clearance between knuckle and front axle excessive			O						
	Knuckle arm and tie rod arm tightening nuts loose			O						
	Ball stud tightening nut of tie rod end loose			O						
	Tie rod end ball stud worn			O						
	Tie rod bent						O			
	Knuckle bent							O		
	Front axle bent							O		
	Various parts of front axle overtightened					O				
Front suspension	U-bolt nut of front suspension loose			O						Gr33
	One of front springs worn-out or broken							O		
Tire	Tire inflation pressure uneven			O					O	Gr31
	Tire inflation pressure too little				O					
	Inflation pressure uneven for right and left tires							O		
	Size and type of right and left tires different							O	O	
	Outer diameters of right and left tires remarkably different							O		
	Handling of tires inadequate								O	

ON-VEHICLE INSPECTION AND ADJUSTMENT

1. Inspection and Adjustment of Wheel Alignment

Before performing inspection and adjustment of wheel alignment, set the vehicle to the following condition.

- Park the vehicle unloaded on a level place.
- The vehicle needs to be equipped with proper size tires.
- If the wear condition of tires on the right is remarkably different from that of tires on the left, replace tires.
- Tires need inflation to specified pressure.
- Correct if the vehicle tilts due to faulty suspension.
- Service all parts of the front axle and ensure that there is no fault such as the following.
  - Play at or loose kingpin
  - Loose front wheel hub
  - Loose bolts used for tightening various parts of tie rod arm, knuckle arm and tie rod
  - Bend of knuckle and front axle
- Adjust play at steering wheel properly.
- For wheel alignment, which is related to the side slip amount, both wheel alignment and the side slip amount must conform to the standard values.

Service standards (Unit: mm {in.})

Location	Maintenance item		Standard value	Limit	Remedy
–	Toe-in		1 to 3 {0.039 to 0.12}	–	Adjust
	Camber		1°00' ± 1°00'	–	Replace
	Caster	FK	2°30' $^{+1°30'}_{-1°00'}$	–	Replace
		FM	2°00' $^{+1°30'}_{-1°00'}$		
	Kingpin inclination angle		7° ± 30'	–	Replace

Tightening torque (Unit: N·m {ft.lbs, kgf·m})

Mark	Parts to be tightened	Tightening torque	Remarks
–	Nut (tie rod end tightening)	78 ± 12 {58 ± 8.7, 8.0 ± 1.2}	Wet

Lubricant and/or sealant

Mark	Points of application	Specified lubricant and/or sealant	Quantity
–	Clamp nut thread of tie rod end	Chassis grease [NLGI No.1 (Li soap)]	As required

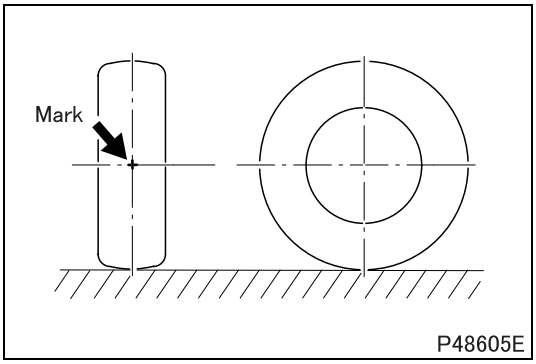

1.1 Inspection and adjustment of toe-in

[Inspection]

- Direct the front wheels exactly to forward running position.
- Put a mark on both the right and left tires at the height of the front wheel axis in the center of the tire width.

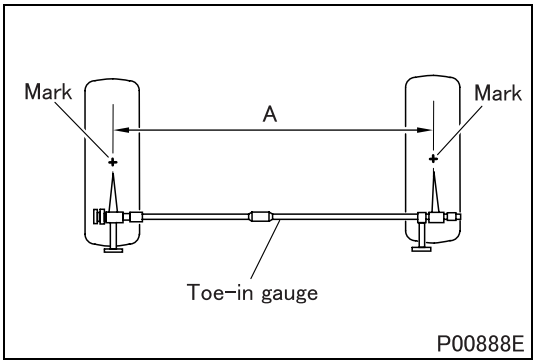

- Align the two points of the toe-in gauge with respective marks and measure distance A between the marks.

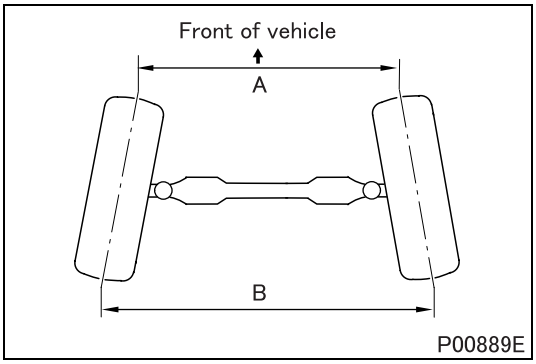

- Push the vehicle to roll the tires 180 degrees.
- Measure distance B between the marks that have moved to the rear of the vehicle.
- If toe-in (difference between A and B) deviates from the standard value, adjust.

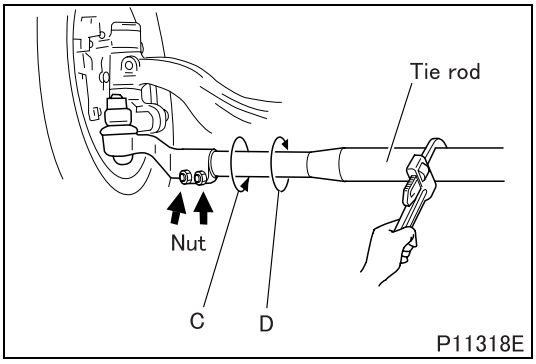

[Adjustment]

★ • Loosen the right and left nuts of tie rod.
- Turn the tie rod with a pipe wrench to adjust the toe-in.
  C: When adjusting to the toe-out direction
  D: When adjusting to the toe-in direction
- After adjustment, tighten the nut to the specified torque.

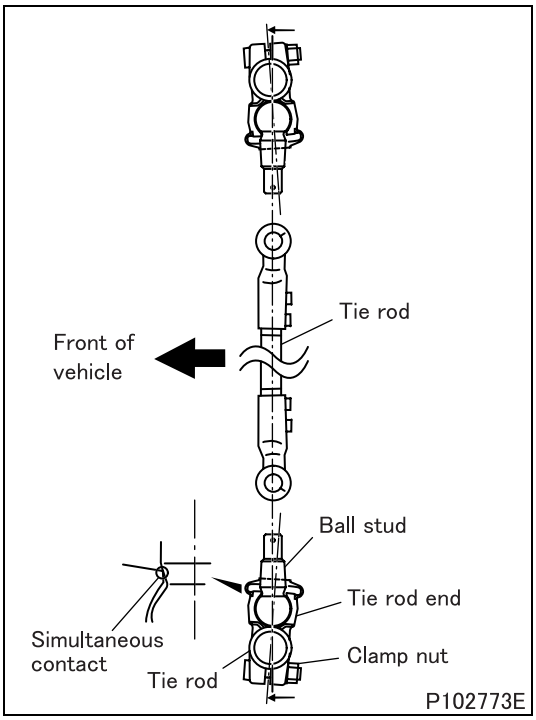

- Hold down the tie rod toward the front or rear of the vehicle with the front wheels directed to forward running position so that the right and left tie rod ends are in contact with the ball studs at the same time.
- In this state adjust the toe-in and tighten the clamp nut to secure the tie rod end.

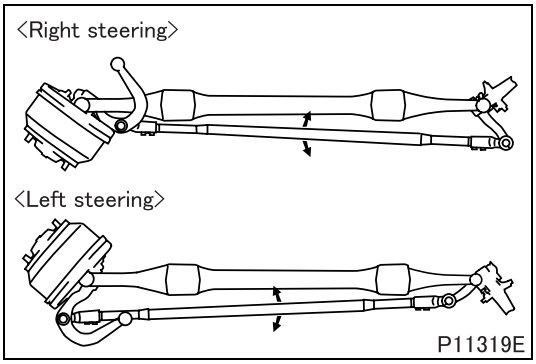

- After adjustment, turn the steering wheel to the extreme left (the state in which the knuckle stopper bolt is contacted), and move the tie rod in the longitudinal direction of the vehicle by hand to make sure that the tie rod moves.
  Do the same for right steering.
  (If the tie rod swings, the tie rod ends should be in contact with the ball studs at the same time.)

WARNING ⚠

- **Be very careful that your hand, or anything else, is not caught due to the movement of the tie rod when the steering wheel is turned left and right.**

- If the tie rod does not swing, repeat the work from the item marked with ★.

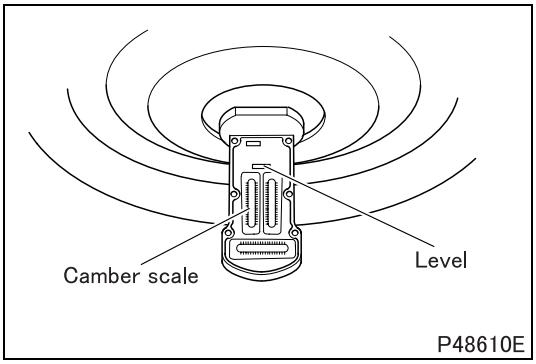

1.2 Inspection of camber

- Direct the front wheels exactly to forward running position.
- Remove the wheel hub cap.
- Wipe off grease from the knuckle end, and bring the camber/caster/kingpin gauge into intimate contact with the front wheel hub.
- Place the level so that the bubble remains in the middle, and read center of bubbles on camber scale in this state to find the camber. Do the same for the right and left front tires.
- If the measured value deviates from the standard value, abnormalities such as wear of kingpin and bushing, loose hub bearing, and bend of knuckle and front axle are suspended. Inspect each part and replace defective parts.

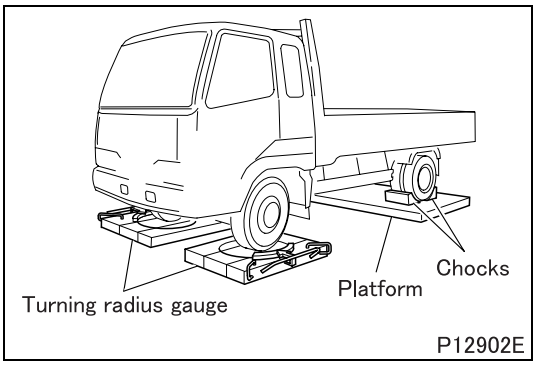

1.3 Inspection of caster and kingpin inclination angle

- Prepare a platform with the same height as the turning radius gauge and place it under the rear wheels so that the vehicle may be placed level.
- Apply chocks to the rear wheels.

WARNING ⚠

- **Do not remove chocks until the entire operation is completed.**

- Keep the turning radius gauge locked.
- Jack up the vehicle and set the right and left front wheels so that respective ground contact area centers of the two wheels and turn table centers may meet.

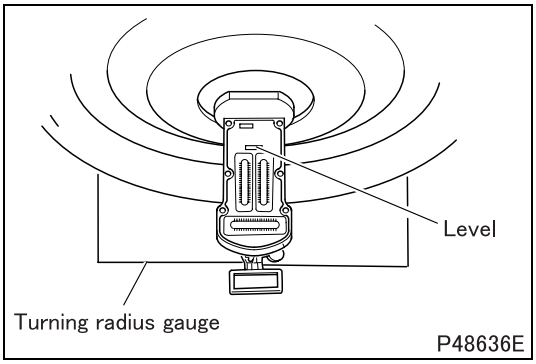

- Unfasten locking of the turning radius gauge, and set the scale to 0 degrees.
- As with the camber measurement in Section **1.2**, attach the camber/caster/kingpin gauge and set the level so that the bubble remains in the middle.

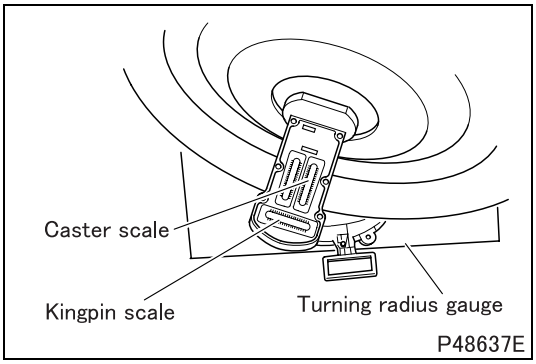

- Apply brake pedal, and with brake applied to the front wheels, turn steering wheel slowly from the point of 0 degrees on the turning radius gauge until the direction is changed by 20 degrees to the right side in the case of the right front wheel and to 20 degrees to the case of the left front wheel.

NOTE

- **It is not possible to make exact measurements unless the brake remains applied, otherwise the wheels will turn slightly.**

- After setting the steering at 20 degrees, set the caster scale and the center of the bubble of the kingpin scale to 0 degrees by turning the adjuster.

NOTE

- **Pay attention to the kingpin scale because it has scales for right and left: align the right kingpin scale in the case of the right front wheel, and left kingpin scale in the case of the left front wheel.**

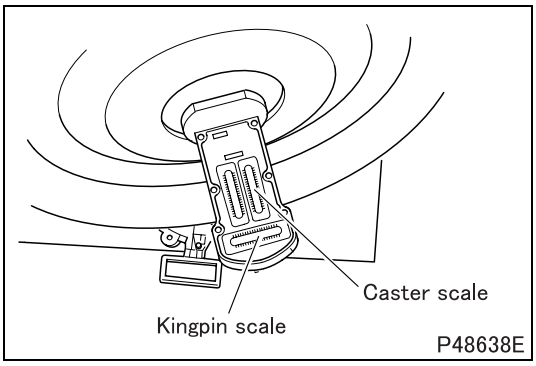

- Reverse this position, turn the steering wheel slowly until the direction of the front wheels changes by 20 degrees in the opposite direction.
- Read the center of the bubbles at this position of the caster scale and kingpin scale to find caster and kingpin inclination angles.
- If the measured value deviates from the standard value, abnormalities such as wear of kingpin and bushing, loose hub bearing, and bend of knuckle and front axle are suspended. Inspect each part and replace defective parts.

2. Inspection and Adjustment of Steering Angle

- Perform steering angle inspection and adjustment only after wheel alignment inspection and adjustment has been completed.

Service standards

Location	Maintenance item			Standard value	Limit	Remedy
–	Steering angle	Inside (outside steering angle is for reference only)	FK	43° (37°)	–	Adjust
			FM	40° (33°)		

Tightening torque (Unit: N·m {ft.lbs, kgf·m})

Mark	Parts to be tightened	Tightening torque	Remarks
–	Lock nut (knuckle stopper bolt tightening)	71 ± 12 {52 ± 8.9, 7.25 ± 1.2}	–

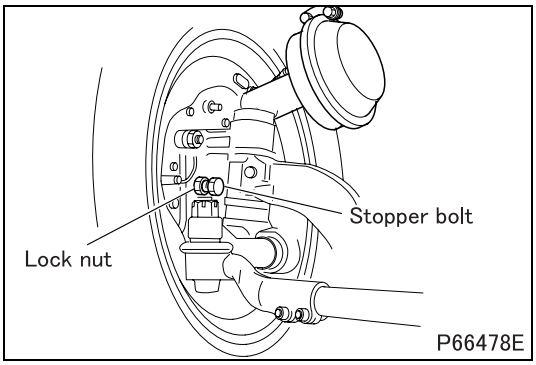

- Set the turning radius gauge and a platform on the vehicle in the same manner as in the case of the caster and kingpin inclination angle measurement performed in Section **1.3**.
- Turn the steering wheel right or left completely from the position where the turning radius gauge is set to 0 degrees, and read the scale of the turning radius gauge to measure the steering angle.
- If the measured value deviates from the standard value, adjust with the knuckle stopper bolt and tighten the lock nut to the specified torque.

3. Inspection of Side Slip

- Perform side slip inspection only after wheel alignment inspection and adjustment has been completed.
- For the side slip amount, which is related to wheel alignment, both the side slip amount and wheel alignment must conform to the standard values.

Service standards (Unit: mm {in.})

Location	Maintenance item	Standard value	Limit	Remedy
–	Side slip amount (per 1 m {3.3 ft.})	3 {0.12} or less	–	Adjust

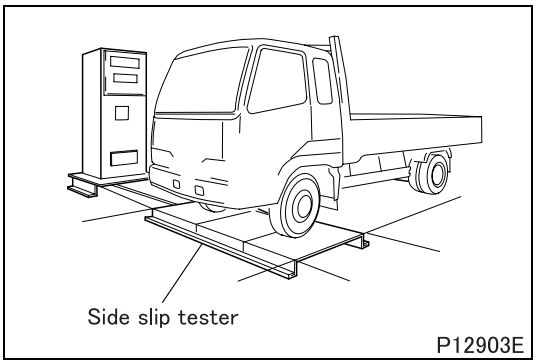

- Set the front wheels exactly to forward running position.
- Move the vehicle forward past the side slip tester as slowly as possible to inspect side slip.

NOTE

- **Pay attention to the following when moving over the side slip tester.**
- **Be sure to hold steering exactly at the forward running position, and make no turn.**
- **Do not apply brake.**
- **Keep the speed constant.**

- If the measured value deviates from the standard value, inspect and adjust wheel alignment.

4. Inspection of Tie Rod End Ball Joint

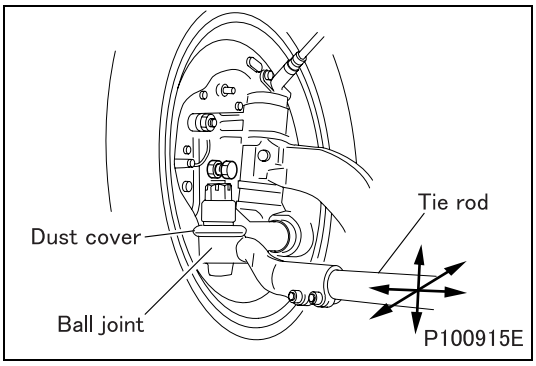

(1) Play

- Hold the tie rod section of the tie rod with the vehicle kept stationary, and move it in the back-and-forth, up-and-down and right-and-left directions to check for play at ball joints of the tie rod end.

NOTE

- **Be sure to check for play at ball joints of both right and left sides of the tie rod.**

- If there is play, replace the tie rod end of the tie rod.

(2) Dust cover

- Check that there are no wear, cracks or damage. Their abnormalities can cause water to enter the ball joint, resulting in premature wear.
- If wear, crack, or damage is present, inspect traces of water entry and occurrence of rust in the ball joint. If any abnormality is found, replace the tie rod end. If no abnormality is found, replace the dust cover and reapply grease.

5. Inspection of Wheel Bearing for Play

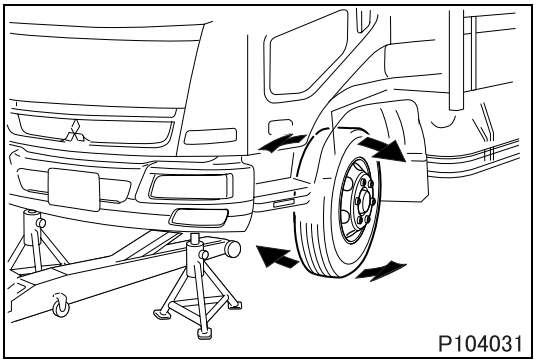

- Jack up the vehicle.
- Try to move the top and bottom of the front tire by hands in the illustrated directions to inspect the wheel bearing for play.
- If play is found with the feel of hands, repeat the inspection procedure while having the brake pedal pressed by another personnel. When the play is removed by operating the brake pedal, the symptom indicates that there is play in the wheel bearing, not in the suspension or other related parts. Then inspect the turning torque of the wheel bearing and adjust it as required. (See WHEEL HUB AND BRAKE DRUM or WHEEL HUB AND ROTOR.)
- If the turning torque of the wheel bearing cannot be adjusted correctly or the play still remains after the adjustment, replace the wheel bearing with a new one. (See WHEEL HUB AND BRAKE DRUM or WHEEL HUB AND ROTOR.)

6. Inspection of Knuckle Joint for Play

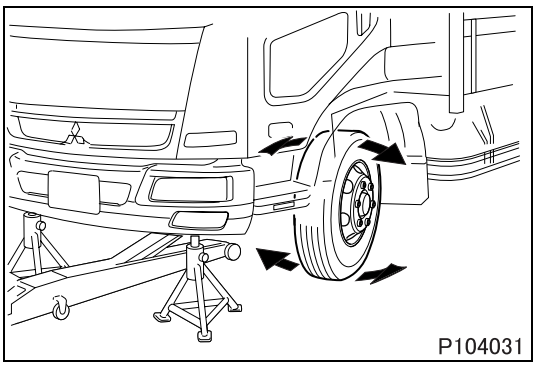

- Jack up the vehicle.
- Try to move the top and bottom of the front tire by hands in the illustrated directions to inspect the knuckle joint for play.
- If play is found with the feel of hands, repeat the inspection procedure while having the brake pedal pressed by another personnel. If there is any play, it may be caused by the play in the knuckle joint. Check each part and replace a defective part. (See KNUCKLE AND KING PIN, FRONT AXLE.)

WHEEL HUB AND BRAKE DRUM

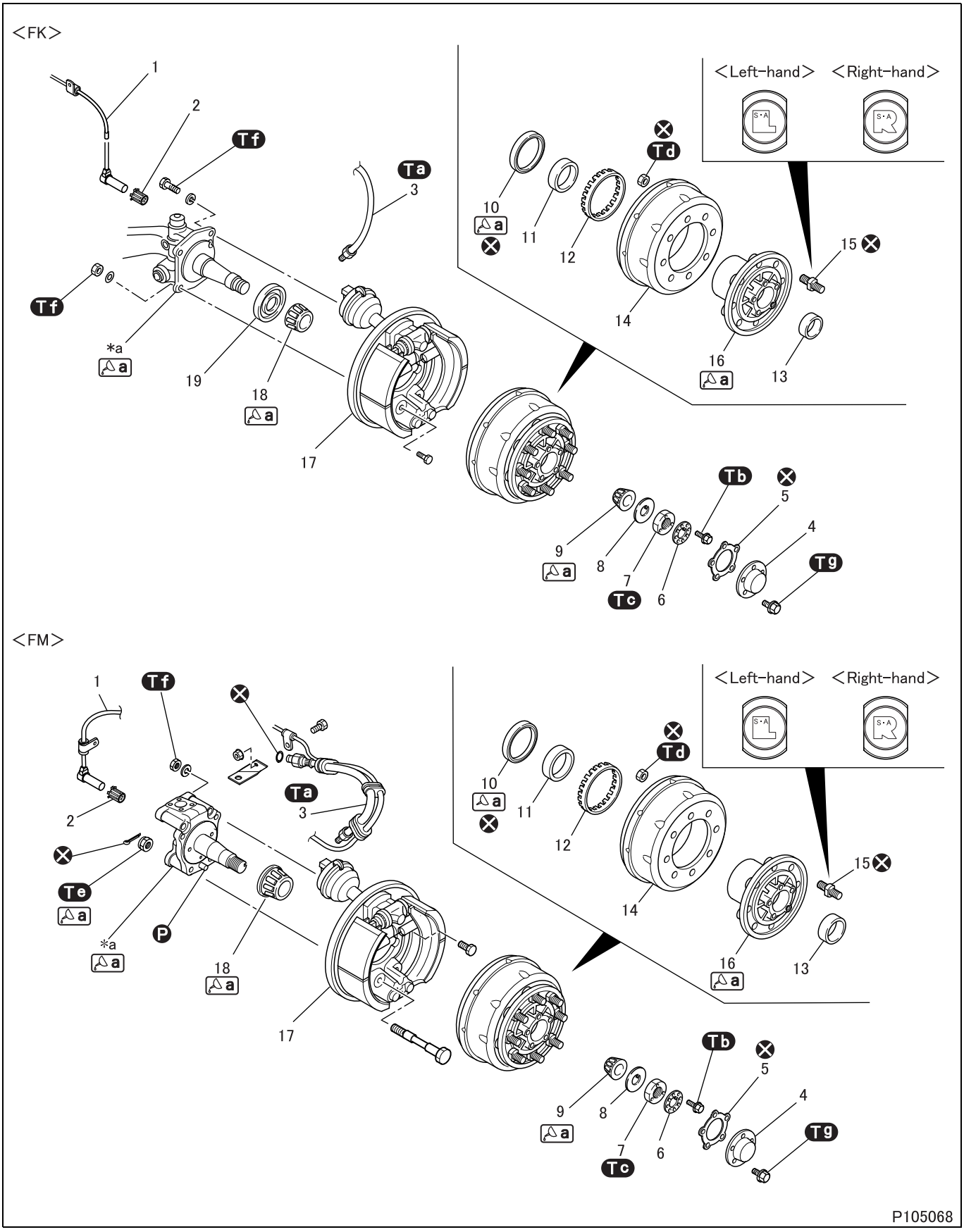

● **Disassembly sequence**

1 Wheel speed sensor
2 Spring spacer
3 Brake hose
4 Wheel hub cover
5 Gasket
6 Lock plate
7 Lock nut
8 Lock washer
9 Outer bearing inner race
10 Oil seal
11 Inner bearing outer race
12 Anti-lock brake system rotor
13 Outer bearing outer race
14 Brake drum
15 Hub bolt
16 Wheel hub
17 Front drum brake (See Gr35B.)
18 Inner bearing inner race
19 Oil seal retainer <FK>

∗**a**: Knuckle
Ⓟ: Locating pin
⊗: Non-reusable parts

CAUTION ⚠

- **Plug the brake hose to prevent entry of dust and dirt after it has been removed.**
- **Store the wheel speed sensor so that its end is not damaged after it has been removed.**

NOTE

- **Do not remove the anti-lock brake system rotor unless replacing it.**
- **Do not disassemble the brake drum and wheel hub unless replacing them.**

● **Assembly sequence**

Follow the disassembly sequence in reverse.

CAUTION ⚠

- **Make sure that the brake hose is not twisted when installing it.**
- **Make sure that the brake lining surface and inner surface of the brake drum of the wheel hub and brake drum are free from grease to avoid malfunction of brakes.**
- **Make sure that the anti-lock brake system rotor and oil seal are not damaged when you install the wheel hub and brake drum on the knuckle.**
- **Adjust brake shoe clearance after assembly. (See Gr35B.)**

Service standards (Unit: mm {in.})

Location	Maintenance item			Standard value	Limit	Remedy
–	Starting torque of wheel hub bearing (tangential force at hub bolt position with oil seal assembled)			2.5 to 5.5 N·m {1.81 to 3.98 ft.lbs, 0.25 to 0.55 kgf·m} (tangential force: 18 to 38 N {3.97 to 8.60 lbs, 1.8 to 3.8 kgf})	–	Adjust or replace
12	Anti-lock brake system rotor shakes			0.05 {0.0020} or less	0.1 {0.0039}	Replace
14	Brake drum	Inside diameter	FK	370 {14.57}	372 {14.65} ※371 {14.61}	Correct or replace
			FM	410 {16.14}	414 {16.30} ※412 {16.22}	
		Cylindricity		0.05 {0.0020}	0.2 {0.0079}	

※: Shows the correction limit value.

WHEEL HUB AND BRAKE DRUM

Tightening torque (Unit: N·m {ft.lbs, kgf·m})

Mark	Parts to be tightened		Tightening torque	Remarks
Ta	Brake hose (frame side)		41.7 ± 2.5 {31 ± 1.8, 4.25 ± 0.25}	–
Tb	Bolt (lock plate mounting)		9 ± 2 {6.5 ± 1.4, 0.9 ± 0.2}	–
Tc	Lock nut	FK	200 {145, 20}	Back-off angle 30° (1/12 of a turn)
		FM	200 {145, 20}	Back-off angle 22.5° (1/16 of a turn)
Td	Nut (brake drum and wheel hub mounting)		322 {235, 32.8}	–
Te	Nut (front drum brake mounting) <FM>		515 ± 123 {380 ± 90, 52.5 ± 12.5}	Wet
Tf	Nut (front drum brake mounting)	FK	300 ± 40 {220 ± 30, 30.6 ± 4.1}	–
		FM	216 ± 32 {160 ± 24, 22 ± 3.3}	
Tg	Bolt (wheel hub cover mounting)		23 ± 4 {17 ± 3.3, 2.35 ± 0.45}	–

Lubricant and/or sealant

Mark	Points of application		Specified lubricant and/or sealant	Quantity	
a	Pack space between rollers of bearing inner race		Wheel bearing grease [NLGI No. 2 (Li soap)]	As required	
	Lip area of oil seal				
	Pack inside of wheel hub <FK>	Wheel hub body		500 g {17.6 oz} ※1	Total 665 ± 20 g {23.1 ± 0.71 oz} ※1
		Around outer bearing		165 g {5.82 oz} ※2	
	Spindle of knuckle <FK>			165 g {5.82 oz} ※2	
	Pack inside of wheel hub <FM>	Wheel hub body		570 g {20.1 oz} ※1	Total 660 ± 20 g {23.6 ± 0.71 oz} ※1
		Around outer bearing		90 g {3.17 oz} ※2	
	Spindle of knuckle <FM>			90 g {3.17 oz} ※2	
	Pack outside of wheel hub			150 ± 10 g {5.29 ± 0.35 oz} ※1	
	Nut thread			As required	

※1: For a wheel

※2: For a wheel, either outer bearing neighborhood or knuckle spindle part

Special tools (Unit: mm {in.})

Mark	Tool name and shape	Part No.	Application
a	Socket wrench A: FK 70 {2.76}, FM 75 {2.95} 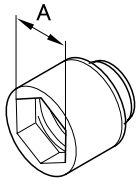 P00900	<FK> MH061528 <FM> MH061530	Removal and installation of lock nut

Mark	Tool name and shape	Part No.	Application
b	Wheel hub puller A: ϕ130 {5.12} B: ϕ120 {4.72} 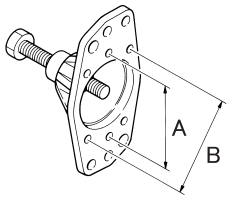 00902	MH061433 or MH061458	Removal of wheel hub and brake drum
c	Anti-lock brake system oil seal installer FK: A: ϕ125 {4.92} FM: A: ϕ140 {5.51} 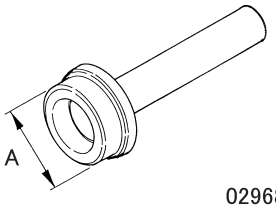 02968	<FK> MH062738 <FM> MH062666	Installation of oil seal
d	Inner bearing installer 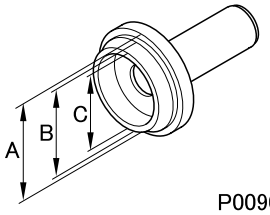 P00903 FK: A: ϕ128 {5.04}, B: ϕ115 {4.53}, C: ϕ110 {4.33} FM: A: ϕ138 {5.43}, B: ϕ125 {4.92}, C: ϕ120 {4.72}	<FK> 03724-62000 <FM> 03723-22000	Installation of inner bearing outer race
e	Outer bearing installer 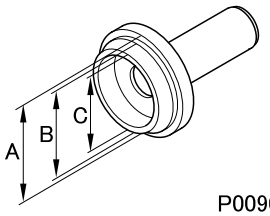 P00903 FK: A: ϕ98 {3.86}, B: ϕ87 {3.43}, C: ϕ82 {3.23} FM: A: ϕ108 {4.25}, B: ϕ98 {3.86}, C: ϕ92.5 {3.64}	<FK> 03724-63000 <FM> 03723-23000	Installation of outer bearing outer race
f	Lever A: 15 {0.59} B: 400 {15.7} 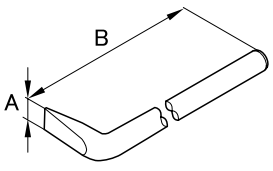 P00904	<FK> MH061683	Prying lever of knuckle and oil seal retainer

Mark	Tool name and shape	Part No.	Application
g	Gear puller 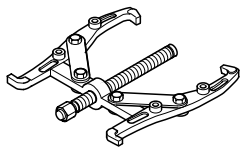 P00905	MH061102	Removal of inner bearing inner race and oil seal retainer
h	Inner bearing installer A: ϕ76.2 {3.00}, B: ϕ67 {2.64}, C: 186 {7.32} 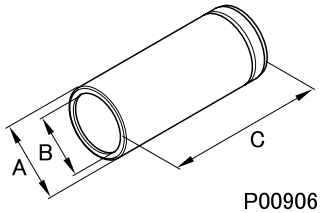 P00906	MH061473	Installation of inner bearing inner race and oil seal retainer

◆Removal procedure◆

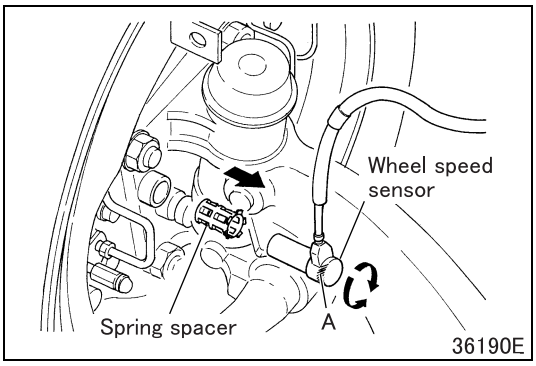

■ Removal: Wheel speed sensor and spring spacer

- Pinch diagonally shaded area A of the wheel speed sensor with pliers and remove it while turning it a little.

CAUTION ⚠

- **When pinching the wheel speed sensor with pliers, do not pinch other areas than the diagonally shaded area.**
- **When removing the wheel speed sensor, never apply excessive force to the sensor, such as hitting with a hammer, prying with a screwdriver or pulling the harness, since these actions can result in the breaking of wire.**
- **If the wheel speed sensor can be removed easily, replace the spring spacer.**

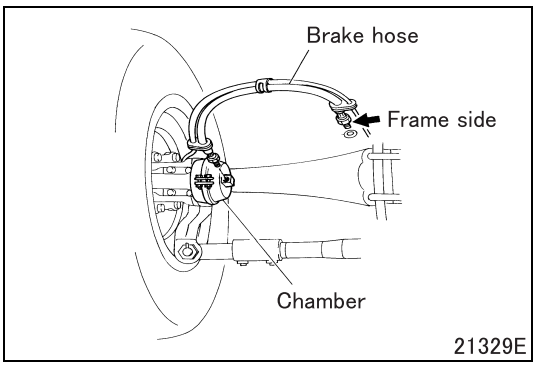

■ Removal: Brake hose

- When removing the brake hose, remove it from the frame side first, and then from the brake chamber side.

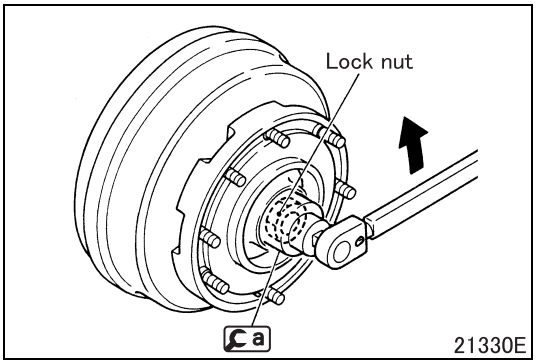

■ **Removal: Lock nut**

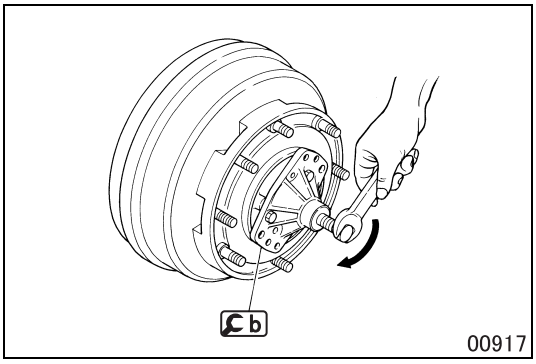

■ **Removal: Wheel hub and brake drum**

- If the brake drum has stepped wear and the wear prevents the wheel hub and brake drum from being removed, the removal can still be effected by taking the following procedure. After the removal, correct or replace the brake drum.

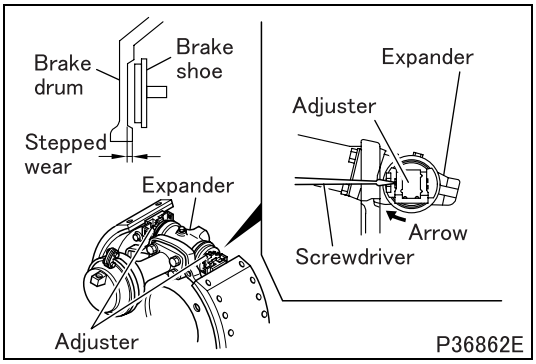

- Remove the dust cover.
- Turn the adjusting screw of the expander in the direction of the arrow, and widen clearance between the brake drum and brake shoe to remove.

CAUTION ⚠

- **When inserting a flat-blade screwdriver, be careful not to damage the expander boot.**

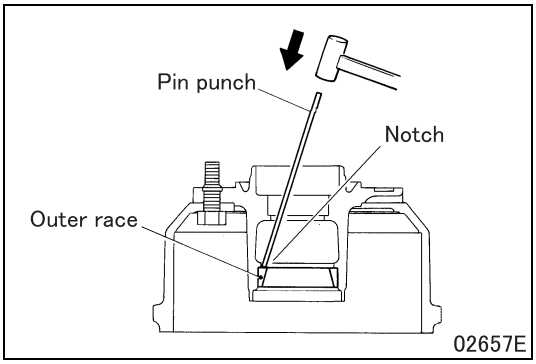

■ **Removal: Inner bearing outer race**

- Drive out the inner bearing outer race by tapping evenly at two notches in the wheel hub.

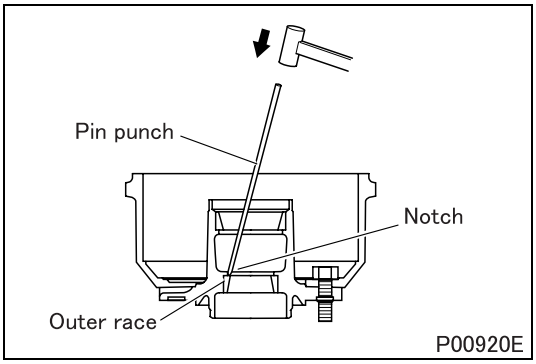

■ **Removal: Outer bearing outer race**

- Drive out the outer bearing outer race by tapping evenly at two notches in the wheel hub.

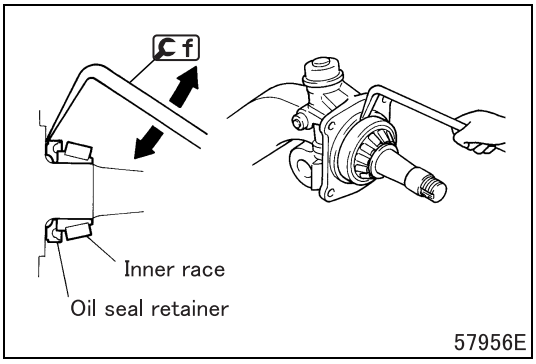

■ **Removal: Inner bearing inner race and oil seal retainer <FK>**

- Pry the oil seal retainer using [f] to open the clearance.

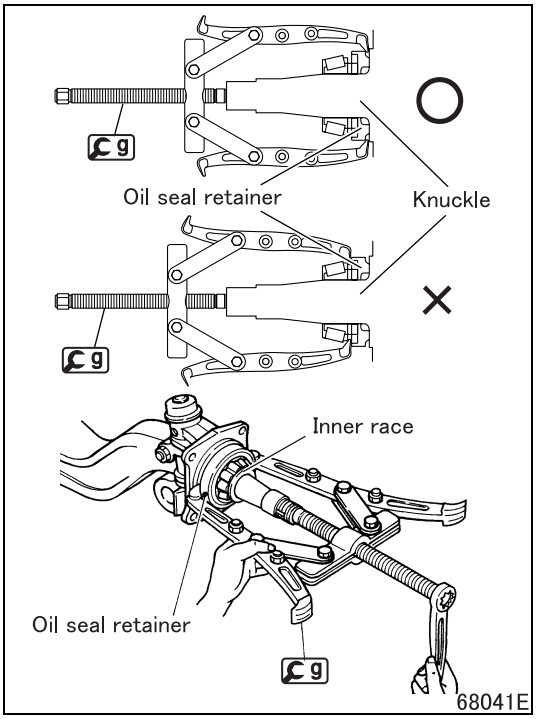

- Hook the claw of [g] to the clearance between the knuckle and oil seal retainer to remove.

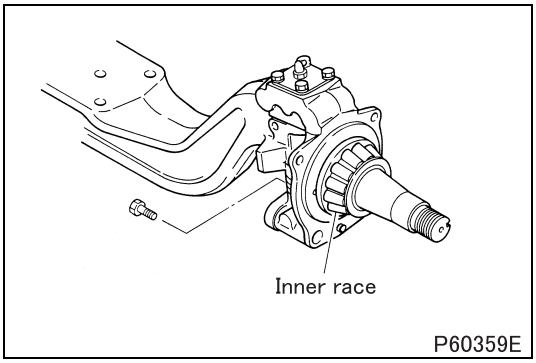

■ **Removal: Inner bearing inner race <FM>**

- Insert two bolts (M14 × 1.5 mm) into the knuckle stopper bolt or screw plug mounting hole of the knuckle evenly to push out the inner bearing inner race.

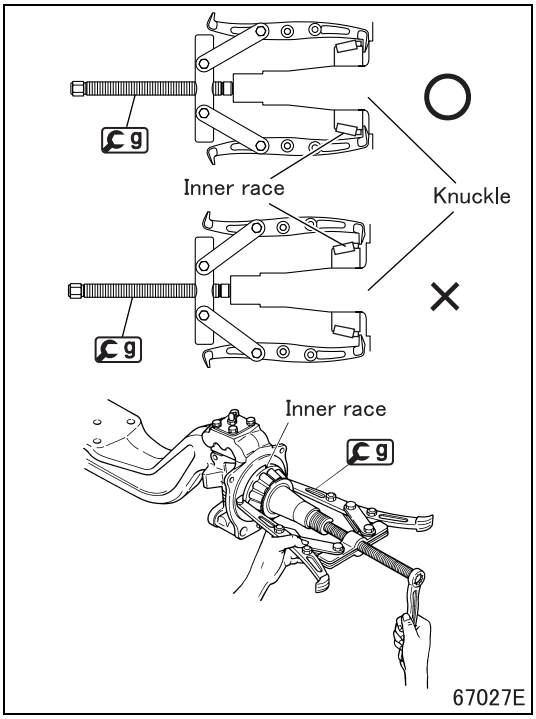

- Hook the claw of g to the clearance between the knuckle and inner bearing race to remove.

◆Inspection procedure◆

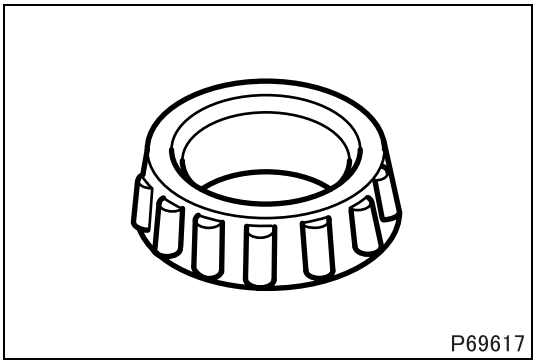

■ Inspection: Outer bearing inner race

- Inspect the outer bearing inner race after cleaning the bearing to remove grease completely.
- If any damage, wear, or poor rotating condition is evident in the inner race, replace it with a new one.
- The inner race and the outer race should be replaced as a set.

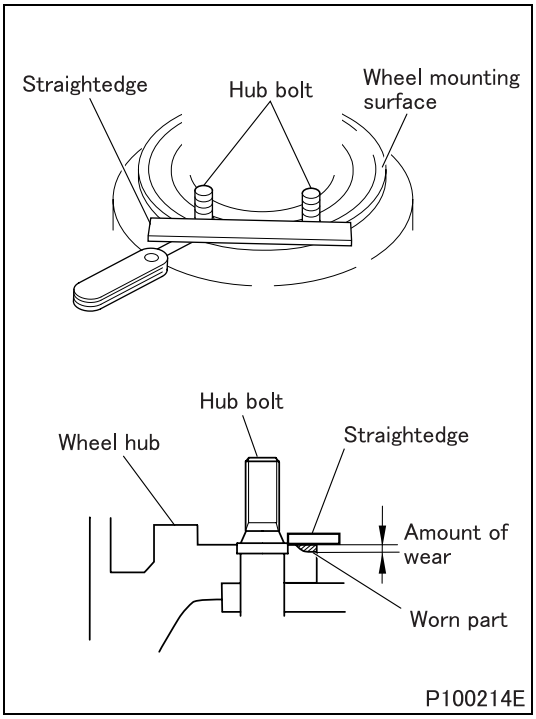

■ **Inspection: Wheel hub**

(1) Visual inspection

- Check the disc wheel mounting surface of the wheel hub by watching and touching. If there is damage or crack on it, replace the wheel hub.
- Make sure that there is not rust, dust, paint or foreign body on the disc wheel mounting surface of the wheel hub to prevent the wheel nut to loosen.
- If any abnormality is found, remove it with sandpaper.

(2) Wear in disc wheel mounting part of wheel hub

- Clean the wheel mounting surface of the wheel hub before inspection.
- Place a straightedge on the hub so as to contact to the two hub bolts on the disc wheel mounting surface.

CAUTION ⚠

- **Make sure that the straightedge does not run onto the hub bolt.**

- Using feeler gauges to measure the amount of wear at the outer periphery of the wheel hub.
  Measure the amount of wear in the area of every hub bolt.
- If the amount of wear at any point exceeds the following standard value, inspect the crack check of wheel hub.
  Wear standard value: 0.8 mm {0.031 in.}

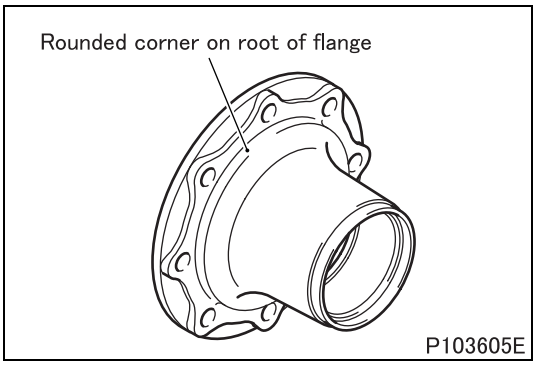

(3) Crack check

- Check if there is not crack on the entire rounded corner on the root of flange of the wheel hub by magnetic particle or liquid penetrant testing. If crack is found, replace the wheel hub.
- If crack is found on the wheel hub bolt, replace it.
- If there is crack or stepped wear on the wheel hub mounting surface of wheel disc, replace it. (See Gr31.)

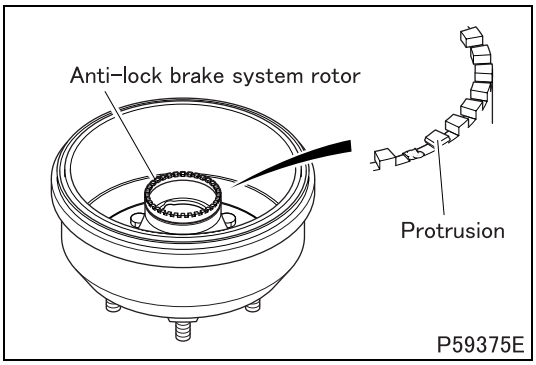

■ **Inspection: Anti-lock brake system rotor**

[Inspection]

- Check the protrusions of the anti-lock brake system rotor for chipping and flattening.
- If any abnormality is found, replace the anti-lock brake system rotor.

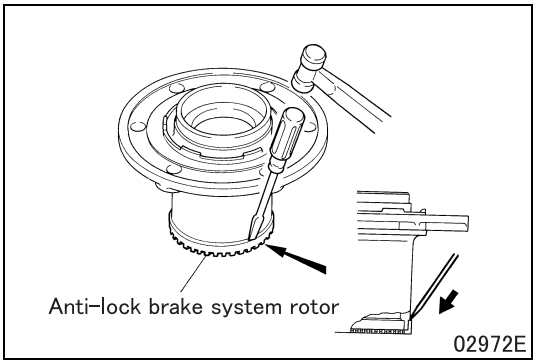

Replacement of anti-lock brake system rotor

[Removal]

- Drive out the anti-lock brake system rotor by tapping evenly at its circumference using a flat-blade screwdriver.

NOTE

- **Be careful not to damage the wheel hub.**

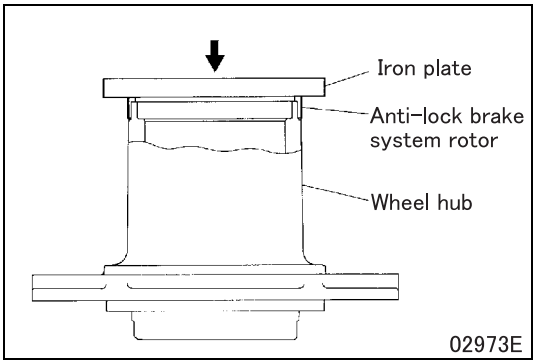

[Installation]

- Warm the anti-lock brake system rotor to approximately 150°C {302°F}, press it evenly using an iron plate, and press it into the wheel hub so that there is no clearance between the wheel hub and the anti-lock brake system rotor.

NOTE

- **When pressing, do not make dents in the rotor.**

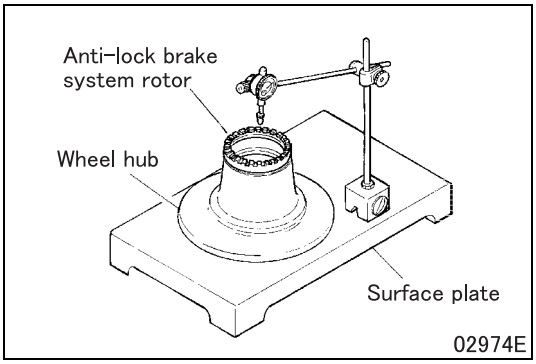

[Inspection]

- If runout is out of the standard value, reassemble.
- If runout is out of the standard value after reassembly, replace the defective part(s).

■ Inspection: Brake drum

- If cylindricity of the brake drum exceeds the limit or the brake drum has stepped wear and seams, cut the brake drum integrally with the wheel hub within the range of the correction limit.

■ Inspection: Inner bearing inner race

- Inspect the inner bearing inner race in the same manner as for the outer bearing inner race.
  (See "■ **Inspection: Outer bearing inner race**".)

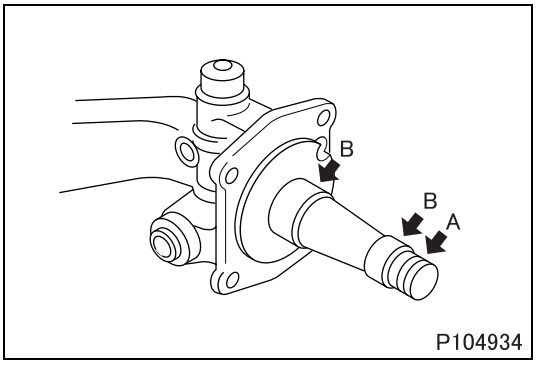

■ Inspection: Knuckle

- If the lock nut tightening threads (A) are damaged, repair the damage using a die to ensure accurate adjustment of starting torque.
- Replace the knuckle if it apparently has stepped, tapered, uneven or other abnormal wear or damage in the outer bearing fitting surface (B).

◆Installation procedure◆

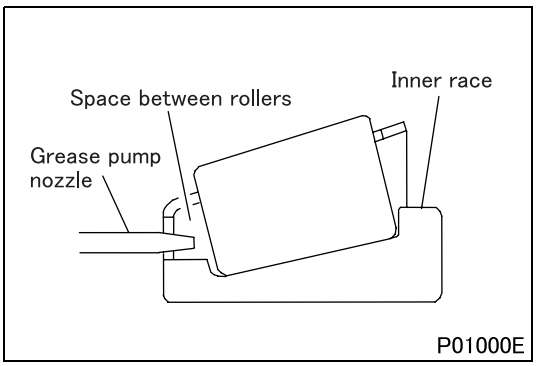

■ **Installation: Packing of grease in inner bearing inner race**

- Insert the grease pump nozzle into the space between rollers of the outer and inner bearing inner race to pack grease sufficiently.

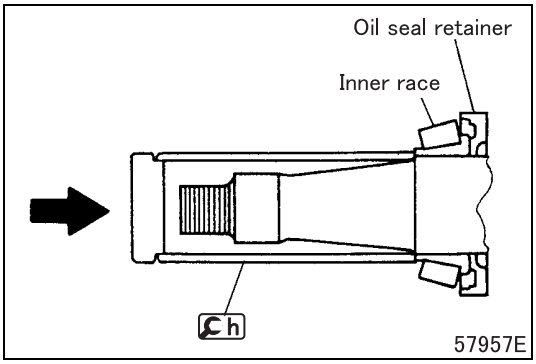

■ **Installation: Inner bearing inner race and oil seal retainer <FK>**

- Using Ch press-fit oil seal retainer and inner bearing inner race simultaneously.

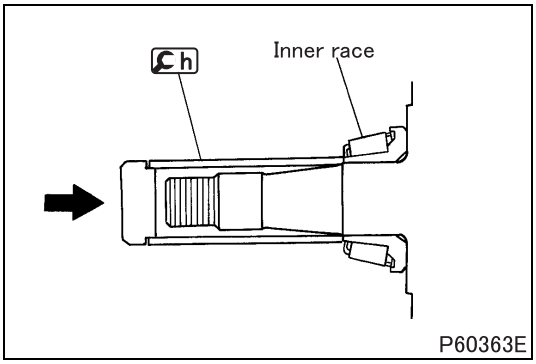

■ **Installation: Inner bearing inner race <FM>**

- Using Ch press-fit inner bearing inner race.

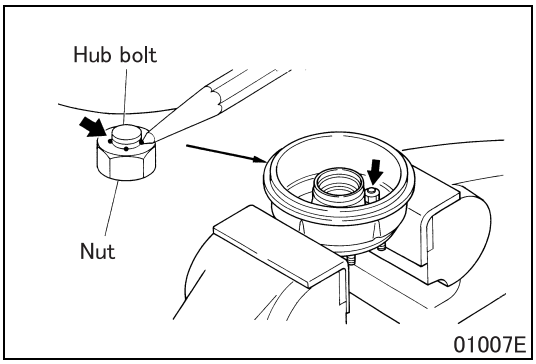

■ **Installation: Hub bolts**

- As for hub bolt, tighten nut at specified torque, and caulk at 4 positions for prevention of loosening.

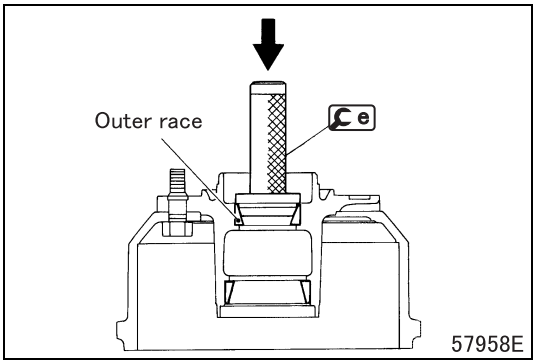

■ **Installation: Outer bearing outer race**

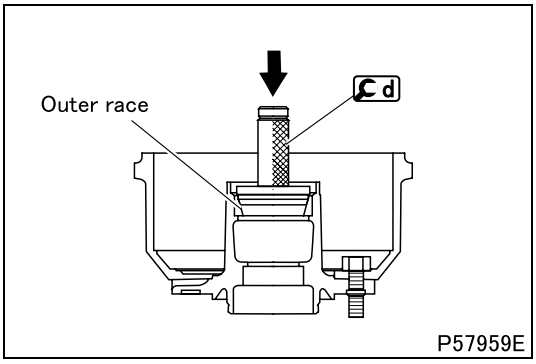

■ **Installation: Inner bearing outer race**

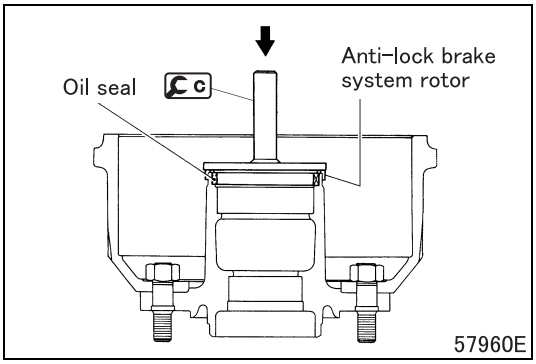

■ **Installation: Oil seal**

- Use c when press-fitting the oil seal to the wheel hub with the anti-lock brake rotor already installed.

■ **Installation: Packing of grease in outer bearing inner race**

- Follow the same procedure as for packing the inner bearing inner race with grease.
  (See "■ **Installation: Packing of grease in inner bearing inner race**".)

■ **Installation: Packing of grease to inside of wheel hub**

- Pack grease following Manner 1 or Manner 2 shown below.

CAUTION ⚠

- **Wheel bearing seized may be caused unless following these manners.**
- **Pack the specific amount of grease measured by measurement cup or etc.**

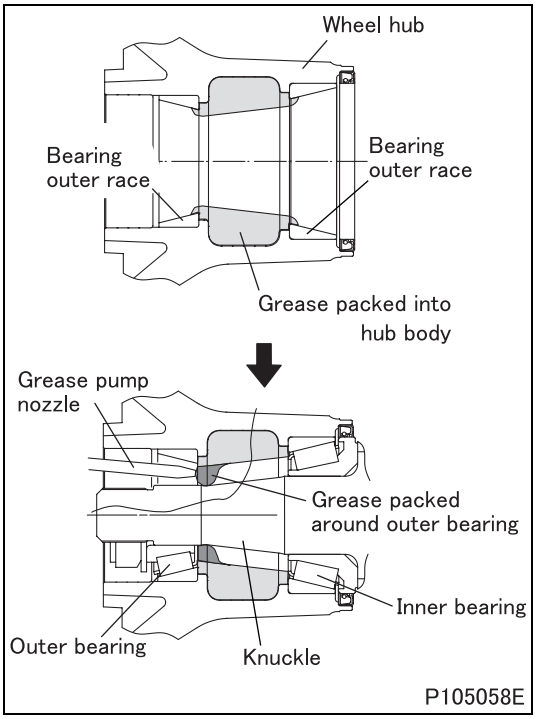

<Manner 1>

- Pack grease in the wheel hub body so much that grease covers the outer and inner bearing outer races to ensure that grease will reach the outer and inner bearings as shown in the drawing.
- After installing the wheel hub in the knuckle, insert a grease pump nozzle into the wheel hub and add grease to around the outer bearing before installing the outer bearing inner race.

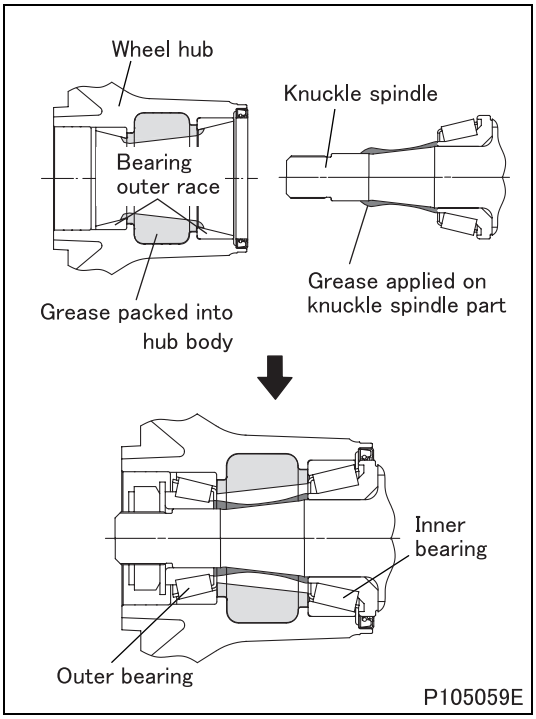

<Manner 2>

- Pack grease in the wheel hub body so much that grease covers the outer and inner bearing outer races to ensure that grease will reach the outer and inner bearings as shown in the drawing.
- Before installing the wheel hub in the knuckle, apply grease to the knuckle spindle.

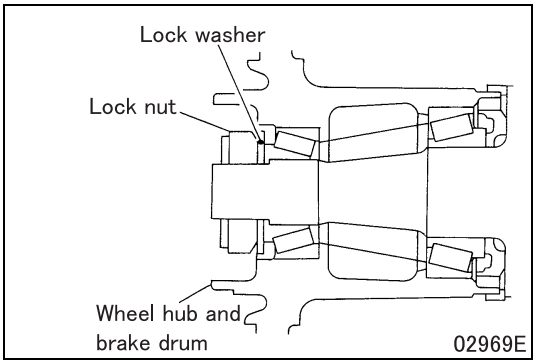

■ **Adjustment: Starting torque of wheel hub bearing**

CAUTION ⚠

- **Unless this adjustment procedure is performed, seizure of the wheel hub bearing can be caused.**

[Adjustment]

- Temporarily tighten the lock nut and make sure that the brake drum and brake shoe do not drag.
- If they drag, make adjustment with the adjuster of the wheel cylinder.
- Gradually tighten the lock nut while turning the wheel hub and brake drum. Tighten the lock nut so that the specified torque is achieved when the wheel hub and brake drum are turned three times or more.

CAUTION ⚠

- **Do not tighten the lock nut without turning the wheel hub and brake drum, or tighten it to the specified torque within three turns. Failure to observe the above will make the installed condition of the inner bearing faulty, causing poor rotation and seizure.**

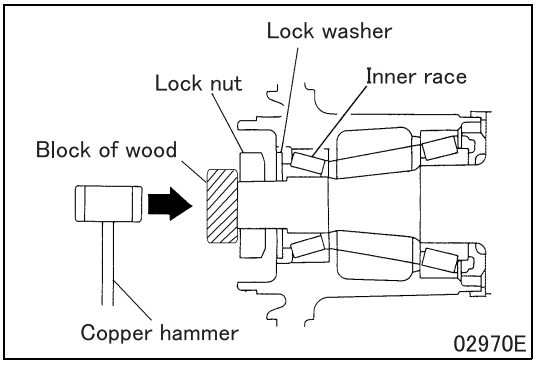

- Perform the following work to pull the outer bearing inner race toward the lock nut side.
- Loosen the lock nut to create clearance between the outer bearing inner race and lock nut.
- Apply a block of wood to the end face of the axle housing, and tap it two or three times while turning the wheel hub and brake drum.

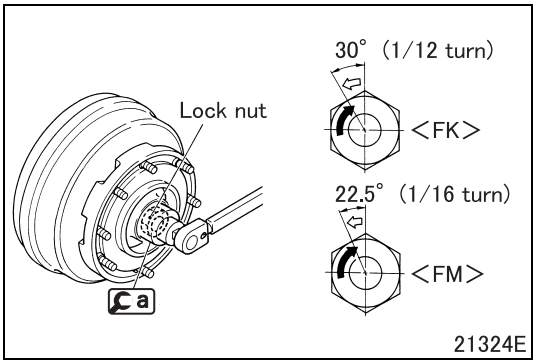

★ • Tighten lock nut at specified torque, and after it, return to the loosening direction as shown by the amount of 30 degrees (1/12 turn) <FK>, 22.5 degrees (1/16 turn) <FM>.

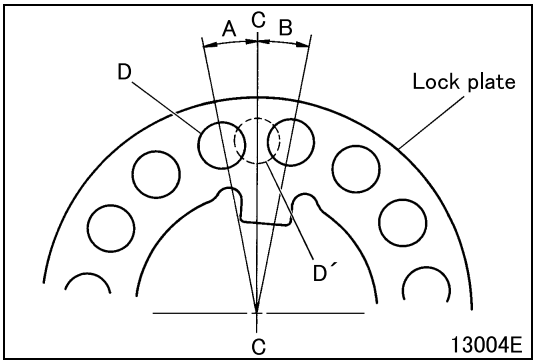

- Fit lock plate into place check to ensure that all of the mounting holes in lock nut and the lock plate are in alignment, and tighten mounting bolts.
- If the mounting holes of lock nut and lock plate are out of alignment, align them by the procedures shown in the following table.

Lock nut hole position	How to align lock plate hole
Range A	Loosen lock nut and align holes.
Range B	Turn over lock plate, loosen lock nut and align holes.
On line C–C	Turn over lock plate and align holes. (Hole position changes from D´ to D.)

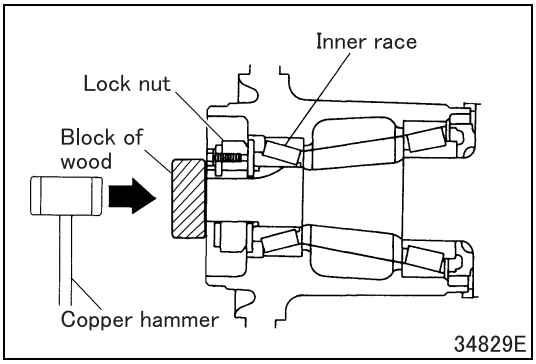

- Perform the following work to pull the outer bearing inner race toward the lock nut side again.
- Apply a block of wood to the end face of the axle housing, and tap it two or three times while turning the wheel hub and brake drum.
- Make sure that there is no looseness in the axial direction.
- Perform a measurement again after adjustment. If the measured value is out of the standard value, repeat the work from the item marked with ★, since adjustment of the lock nut may be insufficient.
- If the result is found to be abnormal, replace the outer and inner bearings.

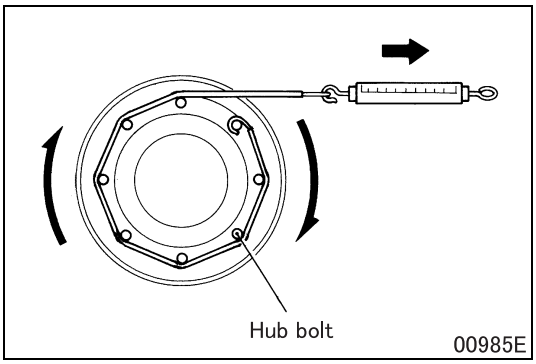

[Inspection]

- After assembly of the lock nut, fasten a spring balance to hub bolt and measure tangential force.
- If the tangential force meets the specified value, starting torque will become the standard value.
- If the measurement deviates from the specified value, repeat the work from the item marked with ★, since adjustment of the lock nut may be insufficient.
- If the result is found to be abnormal, replace outer and inner bearings.

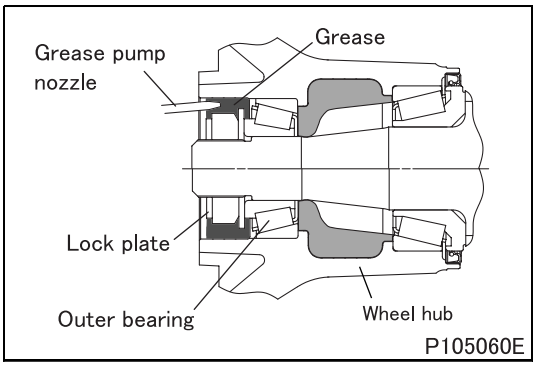

■ Installation: Packing of grease in outside of wheel hub

CAUTION ⚠

- **Unless this packing procedure is performed, seizure of the wheel hub bearing can be caused.**
- **For a grease amount, pack the specified amount using a measuring cup.**

- Pack grease up to the lock plate using a grease pump nozzle so that a wall is formed outside the outer bearing as shown in the illustration.

CAUTION ⚠

- **Do not pile grease in the wheel hub cap. Otherwise, grease does not reach the outer bearing, causing poor lubrication of the bearing.**

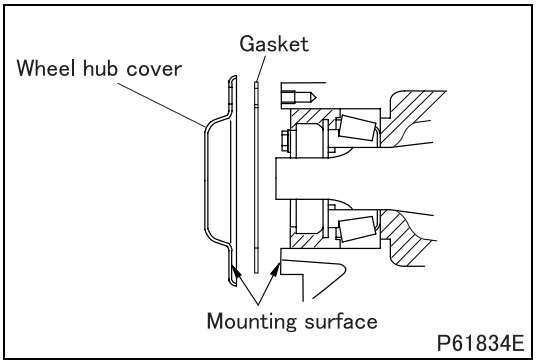

■ **Installation: Wheel hub cover**

CAUTION ⚠

- **Adhesion of grease to the mounting surface with the wheel hub causes water entry and grease leakage.**

■ **Installation: Brake hose**

- To install the brake hose, follow the removal procedure in reverse. (See "■ **Removal: Brake hose**".)
- After installing, make sure that the brake hose does not interfere in the peripheral parts.

CAUTION ⚠

- **Make sure that the brake hose is not twisted when installing it.**

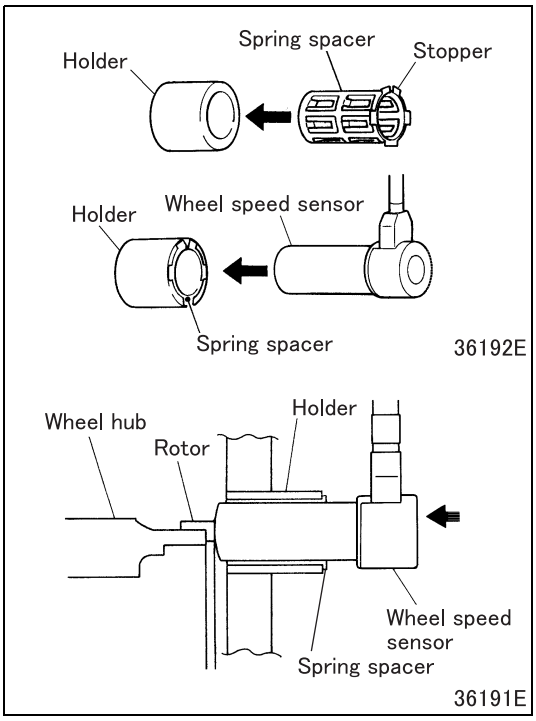

■ **Installation: Wheel speed sensor and spring spacer**

- Insert the spring spacer into the holder of the knuckle and press it in until its stoppers knock against the holder.
- Insert the wheel speed sensor and press it in until it knocks against the rotor with tactile feel.
- Slowly turn the wheel hub and brake drum two or three times (2 seconds per turn) to make sure that they turn smoothly.

CAUTION ⚠

- **When installing the wheel speed sensor, never apply excessive force to the sensor, such as hitting with a hammer, prying with a screwdriver or pulling the harness, since these actions can result in the breaking of wire.**

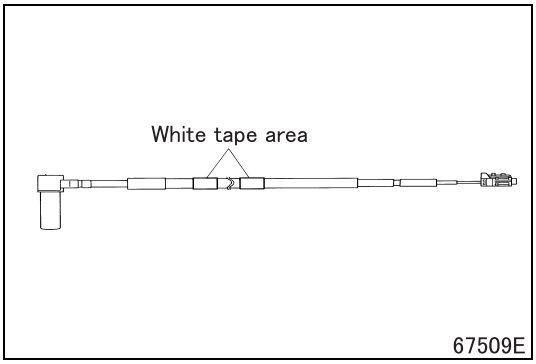

■ **Installation: Harness of wheel speed sensor**

- Be sure to secure clip positions of the wheel speed sensor harness at the white tape area to avoid interference with other parts, twist and slack.

FRONT AXLE, KNUCKLE AND KINGPIN <FK>

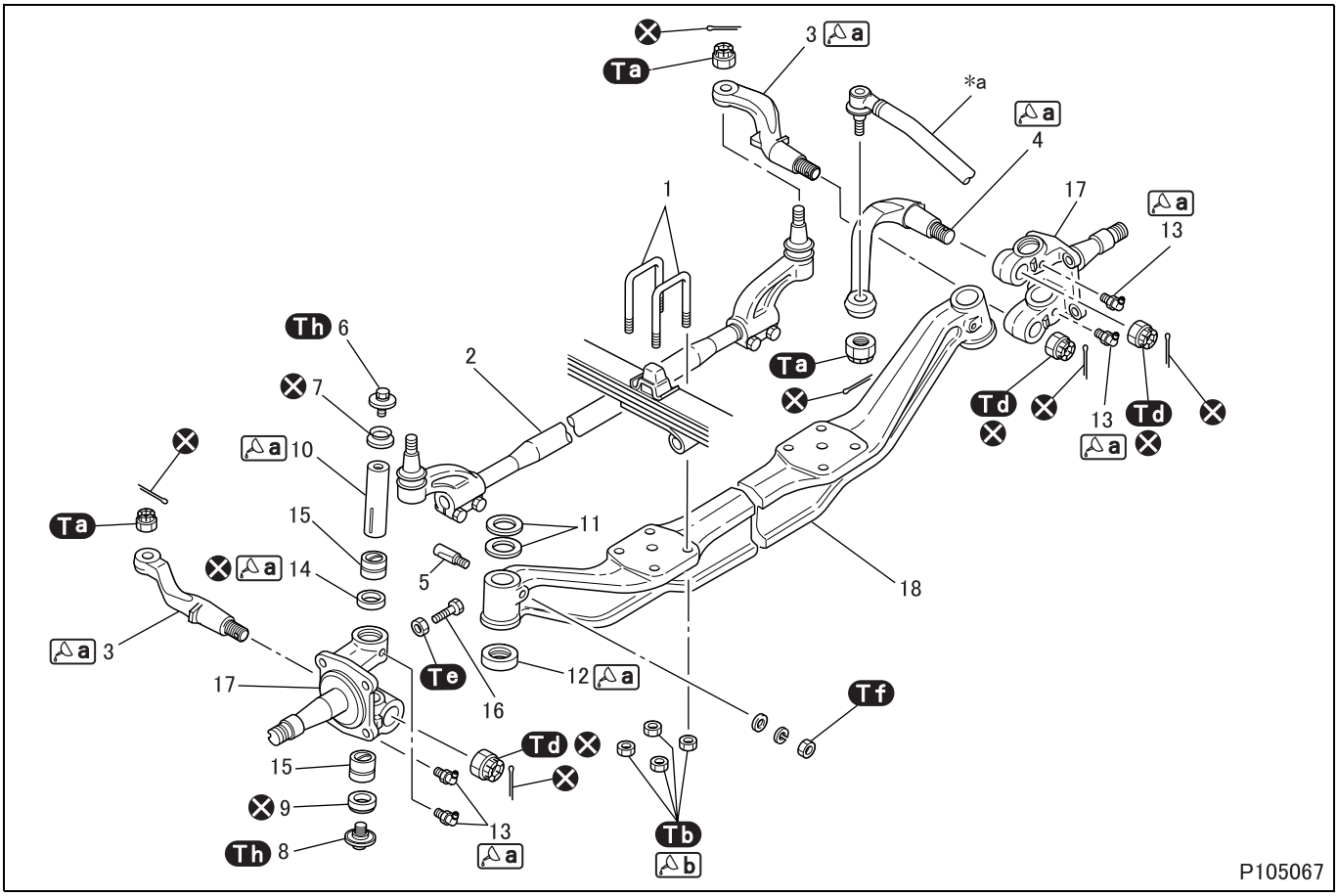

● **Disassembly sequence**

1	U-bolt	**8**	Lower cover	**15**	Bushing
2	Tie rod	**9**	Dust seal	**16**	Knuckle stopper bolt
3	Tie rod arm	**10**	Kingpin	**17**	Knuckle
4	Knuckle arm	**11**	Thrust washer	**18**	Front axle
5	Set bolt	**12**	Thrust bearing		
6	Upper cover	**13**	Grease nipple	***a**	Drag link
7	Dust seal	**14**	Oil seal	⊗	Non-reusable parts

CAUTION ⚠

- **Do not damage the dust cover of the tie rod when removing the tie rod.**
  Damaging the dust cover may cause water infiltration and wear-out at the early stage.

NOTE

- **Kingpin may have a blackened surface, but this is due to transcription of the resin of bushing and does not present any problem.**

● **Assembly sequence**

Follow the disassembly sequence in reverse.

Repair kit: Kingpin kit

Service standards (Unit: mm {in.})

Location	Maintenance item		Standard value	Limit	Remedy
10	Outer diameter of kingpin		44.985 to 44.998 {1.771 to 1.772}	44.9 {1.77}	Replace
10, 15	Clearance between kingpin and bushing		0.02 to 0.06 {0.00079 to 0.0024}	0.15 {0.0059}	Replace
10, 18	Clearance between kingpin and axle		0.002 to 0.04 {0.00008 to 0.0157}	0.1 {0.0039}	Replace
15	Inner diameter of bushing (after having been pressed into knuckle)		45.018 to 45.045 {1.772 to 1.773}	–	Replace
17, 18	Vertical clearance between knuckle and front axle		0.1 {0.0039} or less	0.2 {0.0079}	Adjust
18	Front axle	Horizontal bend	2.5 {0.0098} or less	7 {0.28}	Replace
		Vertical bend	3 {0.12} or less	7 {0.28}	
		Kingpin inclination angle	7° ± 30’	–	

Tightening torque (Unit: N·m {ft.lbs, kgf·m})

Mark	Parts to be tightened	Tightening torque	Remarks
Ta	Nut (drag link mounting)	190 ± 47.5 {140 ± 35, 19.4 ± 4.85}	–
	Nut (tie rod mounting)		
Tb	Nut (U-bolt mounting)	204 to 276 {150 to 205, 20.8 to 28.2}	Wet
Td	Nut (tie rod arm mounting)	677 {500, 69}	–
	Nut (knuckle arm mounting)		
Te	Lock nut (knuckle stopper bolt mounting)	71 ± 12 {53 ± 9.4, 7.3 ± 1.3}	–
Tf	Nut (set bolt mounting)	29 {22, 3}	–
Th	Upper cover	74 ± 15 {54 ± 11, 7.5 ± 1.5}	–
	Lower cover		

Lubricant and/or sealant

Mark	Points of application	Specified lubricant and/or sealant	Quantity
a	Thread areas of tie rod arm and knuckle arm	Wheel bearing grease [NLGI No. 2 (Li soap)]	As required
	Outer surface of kingpin and fill through-hole		
	Pack inside of bearing		
	Packing from grease nipple		Until grease starts overflowing from dust plug
	Oil seal lip		As required
b	Nut thread	Chassis grease [NLGI No. 1 (Li soap)]	As required

Special tools (Unit: mm {in.})

Mark	Tool name and shape	Part No.	Application
Ca	Set bolt remover 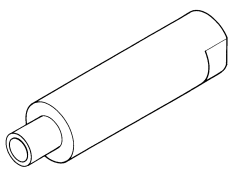 00938	MH061688	Removal of set bolt

Mark	Tool name and shape	Part No.	Application
b	Kingpin puller 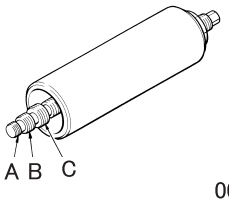 00939 A: M16 × 1.5; B: M22 × 1.5; C: M27 × 1.5	MH061684	Removal of kingpin
c	Oil seal installer A: ϕ45 {1.77} 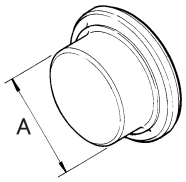 00940	MH062202	Installation of oil seal
d	Kingpin bushing remover A: ϕ45 {1.77}; B: ϕ50 {1.97}; C: ϕ54.5 {2.15} 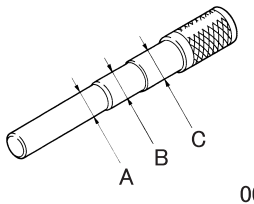 00941	MH061792	Removal of oil seal and removal and installation of bushing

◆Removal procedure◆

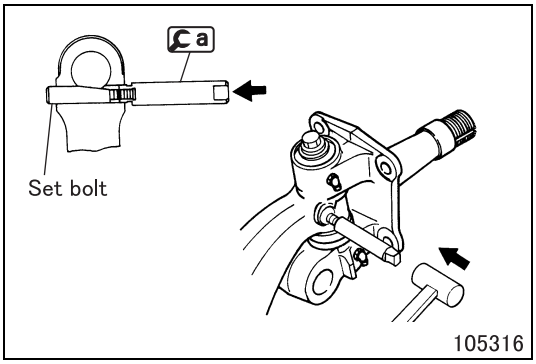

105316

■ **Removal: Set bolt**

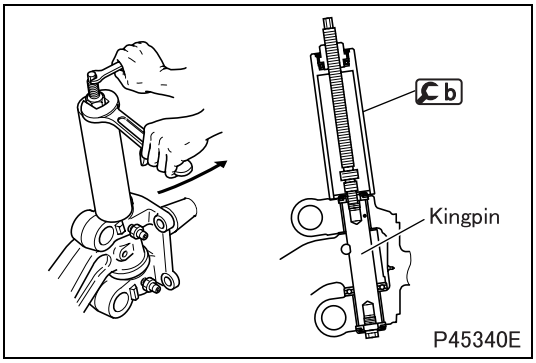

P45340E

■ **Removal: Kingpin**

- Screw b into the kingpin threads to remove the kingpin.

◆Inspection procedure◆

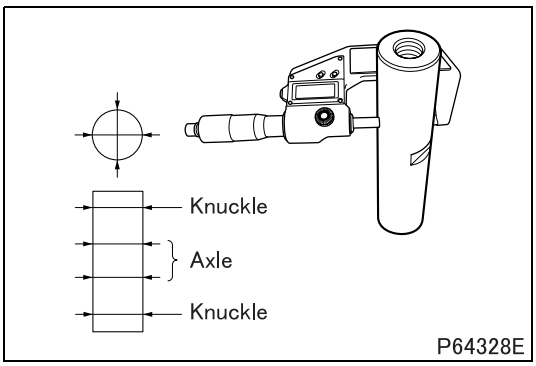

■ **Inspection: Outer diameter of kingpin**

- Take measurement at a total four levels on the kingpin: two levels for the axle fitting portion and one level each for the upper and lower knuckle fitting portions.
- If the measured value is under the limit, replace the kingpin with a new one.

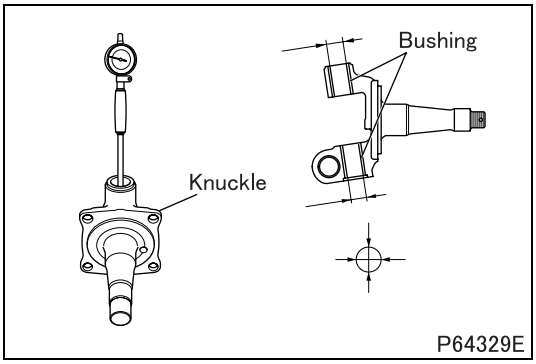

■ **Inspection: Clearance between kingpin and bushing**

- Measure the inner diameter of the upper and lower bushings using a cylinder gauge and calculate the clearance deducting the outer diameter of the kingpin from the inner diameter of the bushing.
  If the clearance exceeds the limit, replace the bushings with new ones.

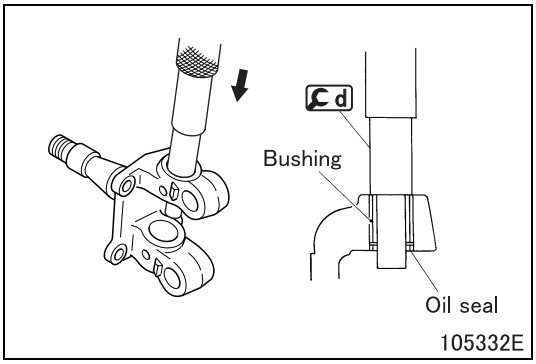

Replace of bushing
[Removal]

- Remove the bushing and the oil seal at the same time using d.

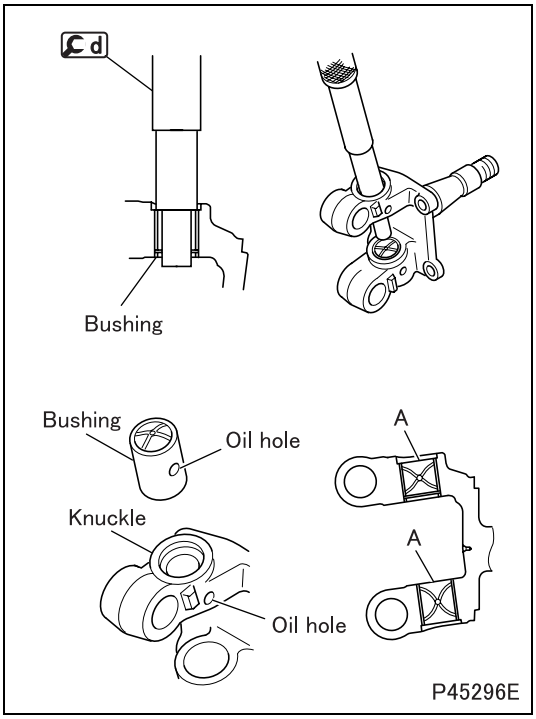

[Installation]

- Install bushing in with oil hole aligned to oil hole of knuckle, until end surface A becomes flush with knuckle end surface.

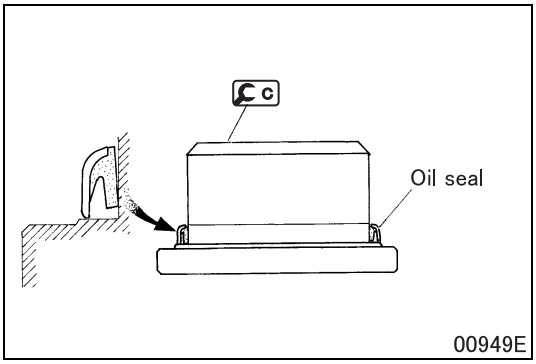

- Apply grease to lip area of oil seal, and set oil seal on c.

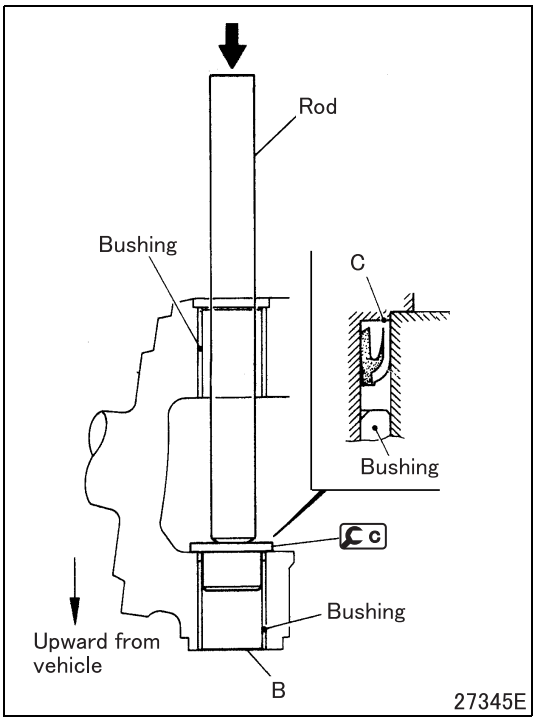

- Next, install c on the knuckle in the illustrated direction.
- Insert rod into kingpin hole, and attach it to c.
- Hit the head using a hammer until c comes to rest at knuckle.
- Make sure that end of bushing at B is flush with knuckle surface.
- End surface of oil seal at C shall not be protruding from knuckle.

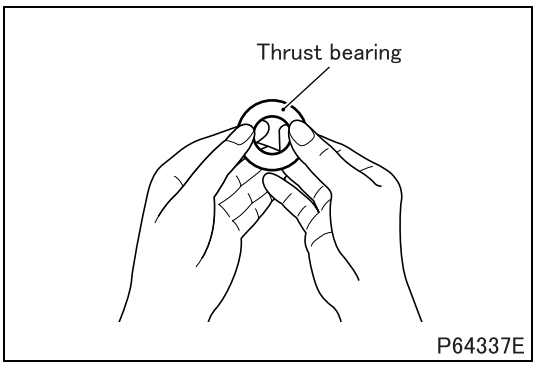

■ **Inspection: Thrust bearing**

- Inspect the aspect and smooth turning of the thrust bearing. If any crack, damage, or un-smooth turning is found, replace the thrust bearing with a new one.

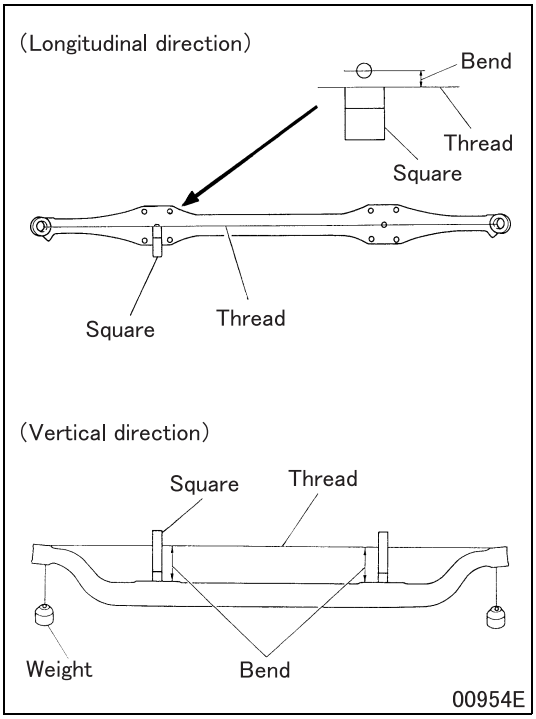

■ **Inspection: Front axle**

(1) Bend of front axle in the longitudinal direction and vertical direction

- Put a piece of thread through kingpin holes of the front axle and hang weights at both ends.
- Use a square to find bend to each of longitudinal and vertical directions.
- If the measured value exceeds the limit, replace the front axle.

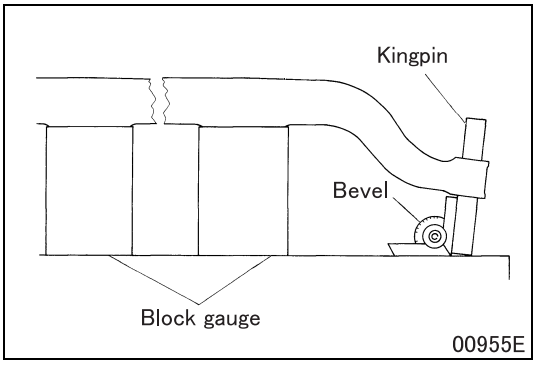

(2) Kingpin inclination angle

- Set the kingpin on the front axle as illustrated to measure the angle.
- If the measured value deviates from the standard value, replace the front axle.

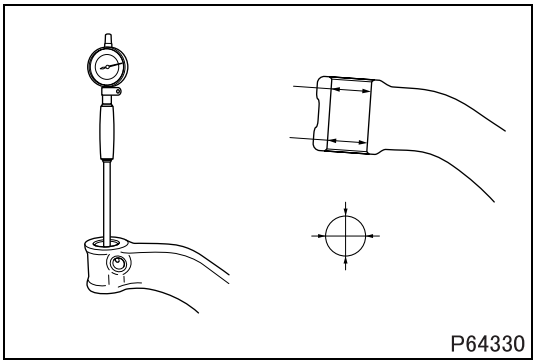

(3) Clearance between kingpin and front axle

- Measure the inner diameter of the axle's hole where the kingpin is inserted using a cylinder gauge and calculate the clearance deducting the outer diameter of the kingpin from the inner diameter.
  If the clearance exceeds the limit, replace the axle or the kingpin with a new one.

◆Installation procedure◆

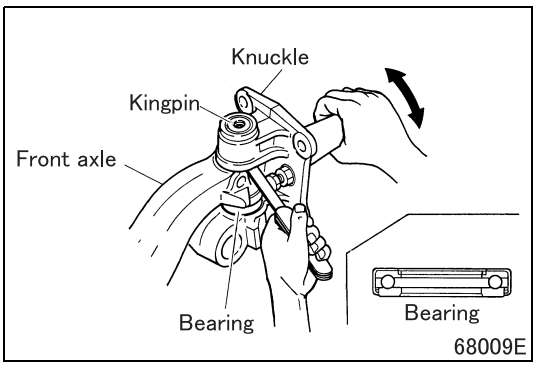

■ **Inspection: Thrust washer, bearing, knuckle and front axle**

[Inspection]

- Provisionally assemble kingpin and bearing, move 2 or 3 times knuckle to have them fit.
- Measure clearance between front axle upper surface and knuckle downside.
- Adjust if the measured value exceeds the limit.

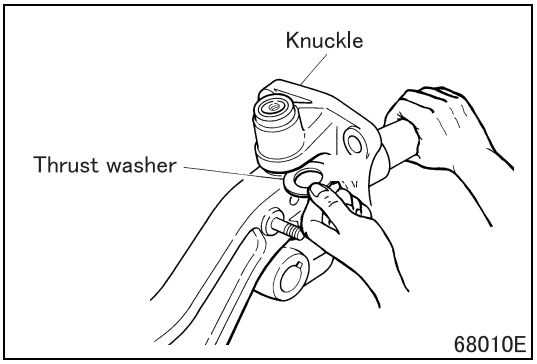

[Adjustment]

- Kinds of adjusting thrust washers
  2.9 to 3.6 mm {0.114 to 0.142 in.} (8 kinds with every 0.1 mm {0.0039 in.} difference)
- Select a thrust washer so as to make clearance as small as possible.
- After assembly, make sure that the knuckle moves smoothly.

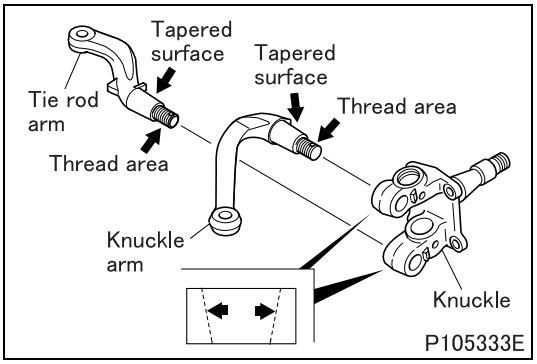

■ **Installation: Tie rod arm, knuckle arm and knuckle**

(1) When any of the tie rod arm, knuckle arm and knuckle, or all of them are reused

- Polish the entire tapered surfaces of tie rod arm, knuckle arm and knuckle evenly by means of sand paper #120 or above until sand paper score is visible on polished surfaces. (This does not apply to new replacement parts.)
- Clean tapered surfaces of knuckle arm and knuckle, and threaded area of knuckle arm screw.

NOTE

- **Use acetone, cleaning fluid for color check, or equivalent as solvent.**

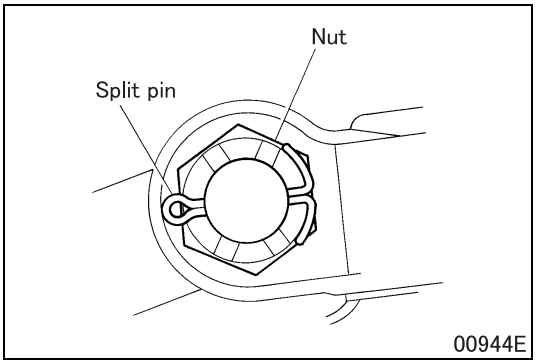

- Apply grease to threaded area of knuckle arm screw and assemble.

CAUTION ⚠

- **Upon assembling, keep off grease from tapered areas of knuckle and knuckle arm.**

- Tighten nut at specified torque, align pin holes in the course of tightening without fail, insert split pin, and secure it.

(2) When all of tie rod arm, knuckle arm and knuckle for assembling are new parts

- Clean tapered surfaces and threaded area of tie rod arm, knuckle arm and knuckle.
- Tighten new nut at specified torque, align pin holes in the course of tightening without fail, insert split pin, and secure it.

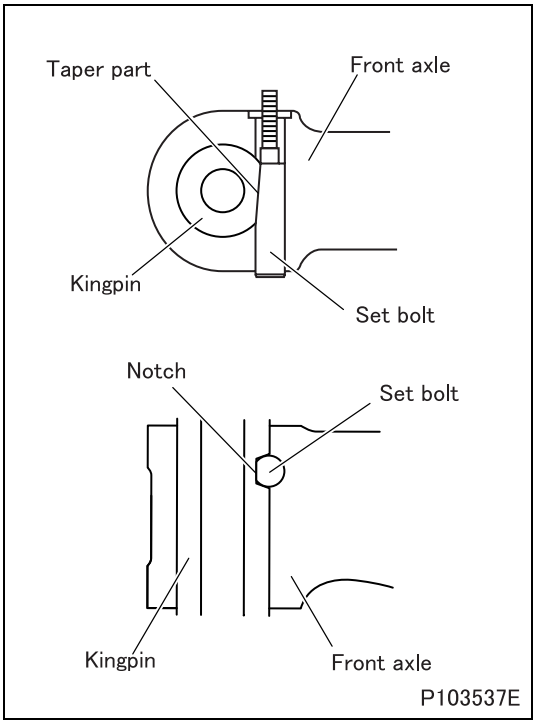

■ **Installation: Set bolt**

- Install the set bolt so that the taper part of the set bolt is aligned with the notch of the kingpin.

◆Work after assembly◆

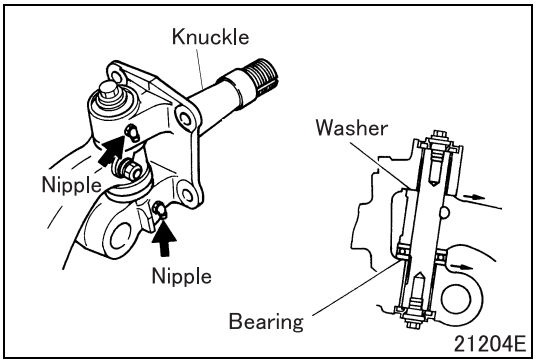

■ **Greasing: Grease nipple**

- Supply grease through the grease nipple of the knuckle.
- Supply grease until it overflows from the thrust washer and press portion of the bearing.

FRONT AXLE, KNUCKLE AND KINGPIN <FM>

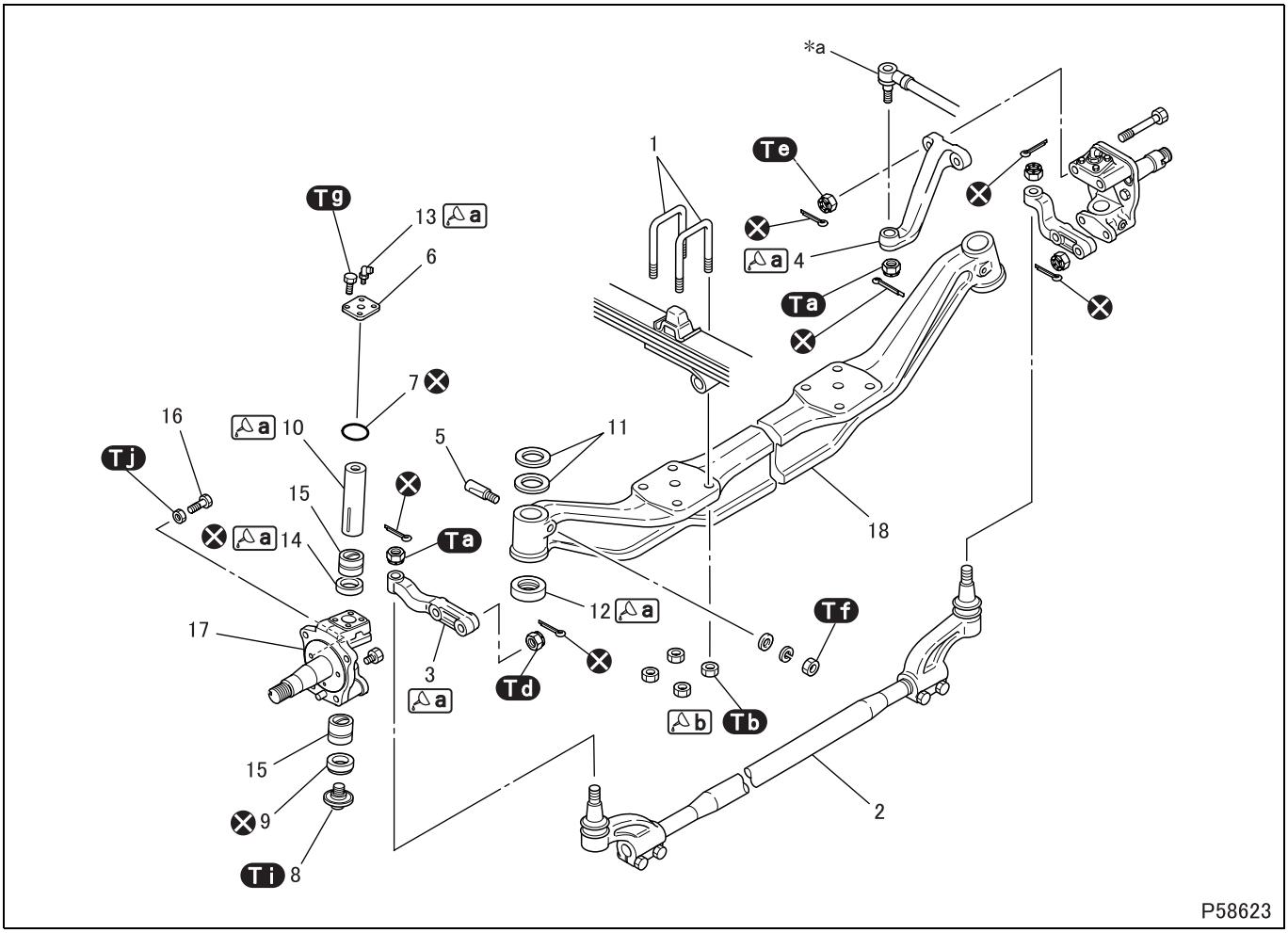

● **Disassembly sequence**

1 U-bolt
2 Tie rod
3 Tie rod arm
4 Knuckle arm
5 Set bolt
6 Upper cover
7 O-ring
8 Lower cover
9 Dust seal
10 Kingpin
11 Thrust washer
12 Thrust bearing
13 Grease nipple
14 Oil seal
15 Bushing
16 Knuckle stopper bolt
17 Knuckle
18 Front axle

***a**: Drag link
⊗: Non-reusable parts

CAUTION ⚠

- **Do not damage the dust cover of the tie rod when removing the tie rod. Damaging the dust cover may cause water infiltration and wear-out at the early stage.**

NOTE

- **Kingpin may have a blackened surface, but this is due to transcription of the resin of bushing and does not present any problem.**

● **Assembly sequence**

Follow the disassembly sequence in reverse.

Repair kit: Kingpin kit

Service standards (Unit: mm {in.})

Location	Maintenance item		Standard value	Limit	Remedy
10	Outer diameter of kingpin		49.985 to 49.998 {1.967 to 1.968}	49.9 {1.96}	Replace
10, 15	Clearance between kingpin and bushing		0.02 to 0.06 {0.00079 to 0.0024}	0.15 {0.0059}	Replace
10, 18	Clearance between kingpin and axle		0.002 to 0.04 {0.00008 to 0.0157}	0.1 {0.039}	Replace
15	Inner diameter of bushing (after having been pressed into knuckle)		50.018 to 50.045 {1.969 to 1.970}	–	Replace
17, 18	Vertical clearance between knuckle and front axle		0.1 {0.0039} or less	0.2 {0.0079}	Adjust
18	Front axle	Horizontal bend	2.5 {0.098} or less	7 {0.28}	Replace
		Vertical bend	3 {0.12} or less	7 {0.28}	
		Kingpin inclination angle	7° ± 30’	–	

Tightening torque (Unit: N·m {ft.lbs, kgf·m})

Mark	Parts to be tightened	Tightening torque	Remarks
Ta	Nut (drag link mounting)	353 ± 88 {260 ± 65, 36 ± 9}	–
	Nut (tie rod mounting)		
Tb	Nut (U-bolt mounting)	404 to 548 {295 to 405, 41.2 to 55.8}	Wet
Td	Nut (tie rod arm mounting)	515 ± 123 {380 ± 90, 52.5 ± 12.5}	–
Te	Nut (knuckle arm mounting)	466 ± 74 {345 ± 54, 47.5 ± 7.5}	–
Tf	Nut (set bolt mounting)	29 {22, 3}	–
Tg	Bolt (upper cover mounting)	41.2 ± 7.8 {30 ± 5.8, 4.2 ± 0.8}	–
Ti	Lower cover	137 ± 29 {100 ± 20, 14 ± 3}	–
Tj	Lock nut (knuckle stopper bolt mounting)	71 ± 12 {53 ± 9.4, 7.3 ± 1.3}	–

Lubricant and/or sealant

Mark	Points of application	Specified lubricant and/or sealant	Quantity
a	Thread areas of tie rod arm and knuckle arm	Wheel bearing grease [NLGI No. 2 (Li soap)]	As required
	Outer surface of kingpin and fill through-hole		
	Pack inside of bearing		
	Packing from grease nipple		Until grease starts overflowing from dust plug
	Oil seal lip		As required
b	Nut thread	Chassis grease [NLGI No. 1 (Li soap)]	As required

Special tools (Unit: mm {in.})

Mark	Tool name and shape	Part No.	Application
a	Set bolt remover 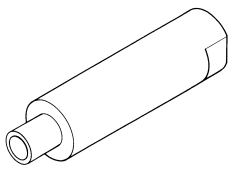 00938	MH061688	Removal of set bolt

FRONT AXLE, KNUCKLE AND KINGPIN <FM>

Mark	Tool name and shape	Part No.	Application
ⓑ	Kingpin puller 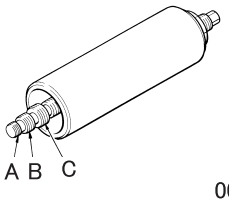 00939 A: M16 × 1.5 B: M22 × 1.5 C: M27 × 1.5	MH061684	Removal of kingpin
ⓒ	Oil seal installer A: ϕ50 {1.97} 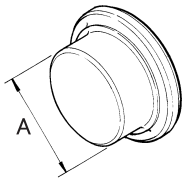 00940	MH062203	Installation of oil seal
ⓓ	Kingpin bushing remover A: ϕ45 {1.77} B: ϕ50 {1.97} C: ϕ54.5 {2.15} 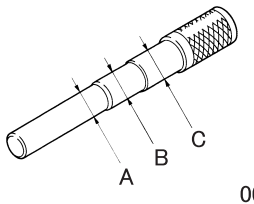 00941	MH061792	Removal of oil seal and removal and installation of bushing

◆Removal procedure◆

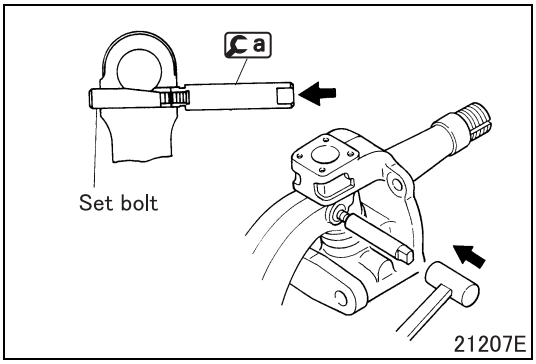

21207E

■ **Removal: Set bolt**

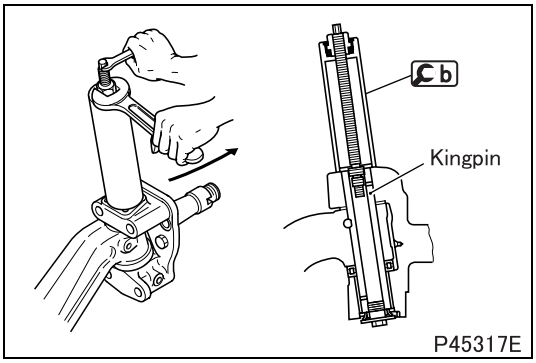

P45317E

■ **Removal: Kingpin**

- Screw ⓑ into the kingpin threads to remove the kingpin.

◆Inspection procedure◆

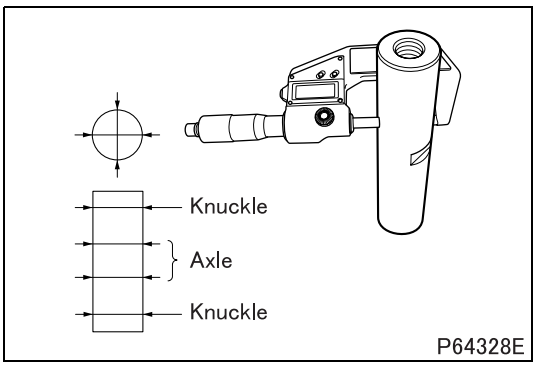

■ **Inspection: Outer diameter of kingpin**

- Take measurement at a total four levels on the kingpin: two levels for the axle fitting portion and one level each for the upper and lower knuckle fitting portions.
- If the measured value is under the limit, replace the kingpin with a new one.

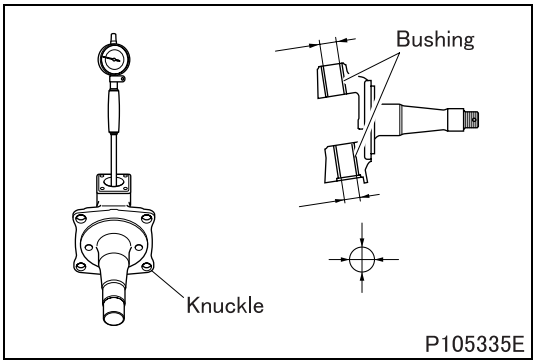

■ **Inspection: Clearance between kingpin and bushing**

- Measure the inner diameter of the upper and lower bushings using a cylinder gauge and calculate the clearance deducting the outer diameter of the kingpin from the inner diameter of the bushing.
  If the clearance exceeds the limit, replace the bushings with new ones.

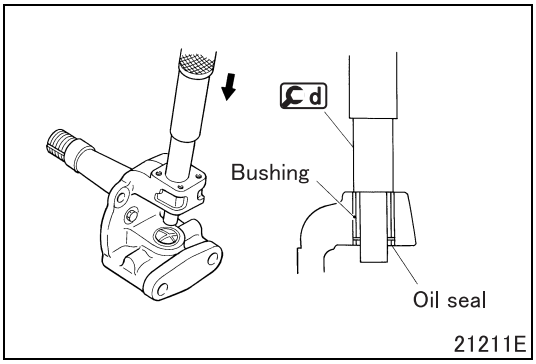

Replace of bushing
[Removal]

- Remove the bushing and the oil seal at the same time using d.

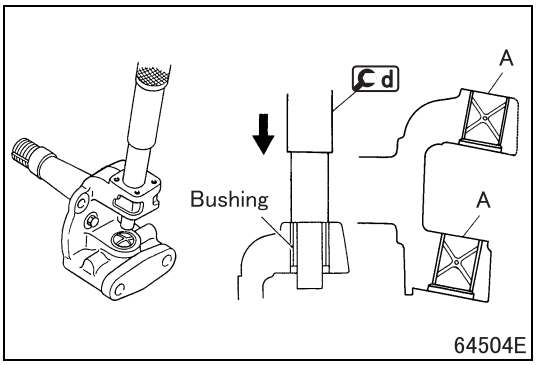

[Installation]

- Install the bushing so that it is flush with the knuckle at A.

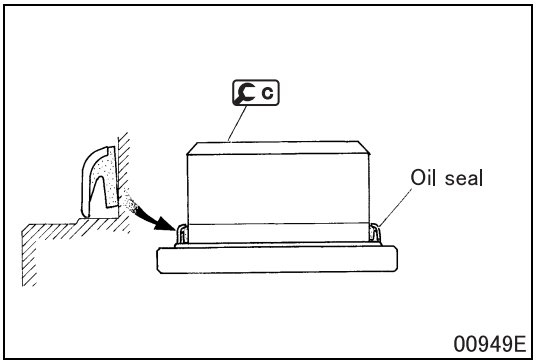

- Apply grease to lip area of oil seal, and set oil seal on C.

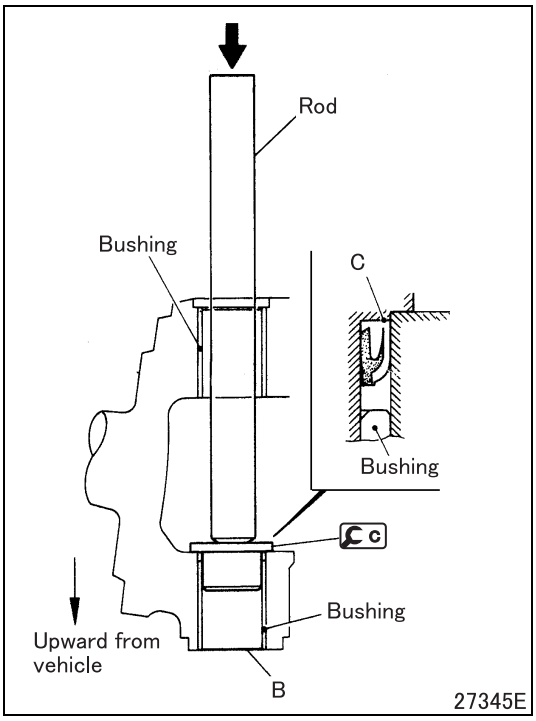

- Next, install C on the knuckle in the illustrated direction.
- Insert rod into kingpin hole, and attach it to C.
- Hit the head using a hammer until C comes to rest at knuckle.
- Make sure that end of bushing at B is flush with knuckle surface.
- End surface of oil seal at C shall not be protruding from knuckle.

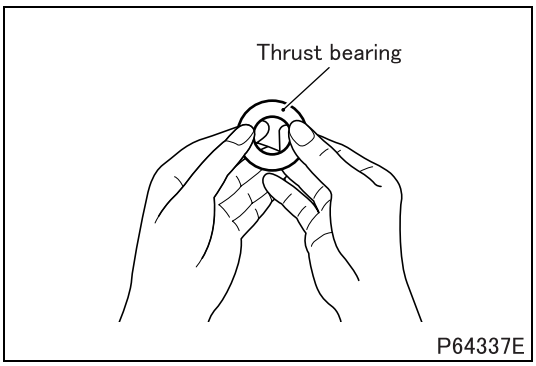

■ Inspection: Thrust bearing

- Inspect the aspect and smooth turning of the thrust bearing. If any crack, damage, or un-smooth turning is found, replace the thrust bearing with a new one.

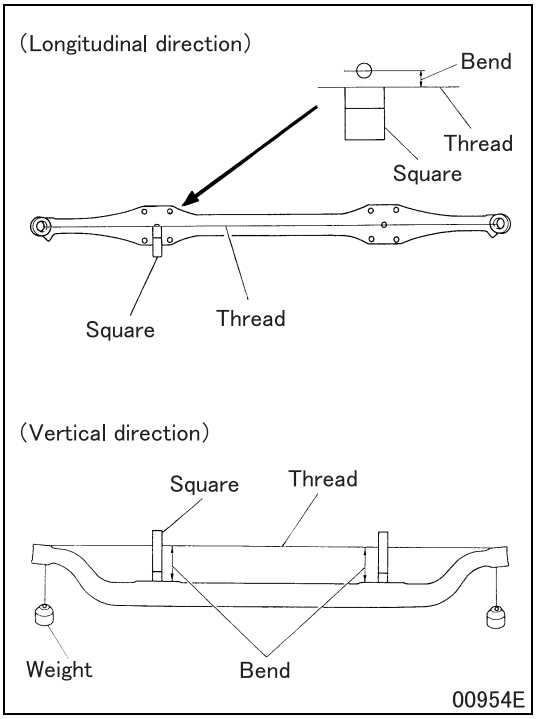

■ **Inspection: Front axle**

(1) Bend of front axle in the longitudinal direction and vertical direction

- Put a piece of thread through kingpin holes of the front axle and hang weights at both ends.
- Use a square to find bend to each of longitudinal and vertical directions.
- If the measured value exceeds the limit, replace the front axle.

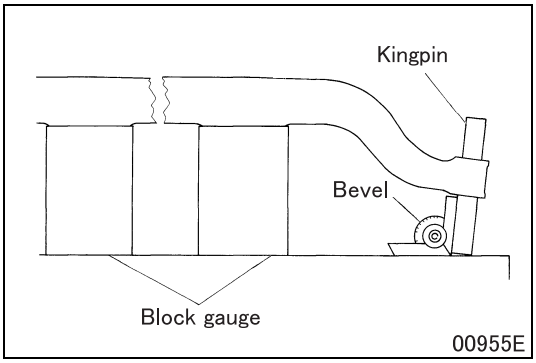

(2) Kingpin inclination angle

- Set the kingpin on the front axle as illustrated to measure the angle.
- If the measured value deviates from the standard value, replace the front axle.

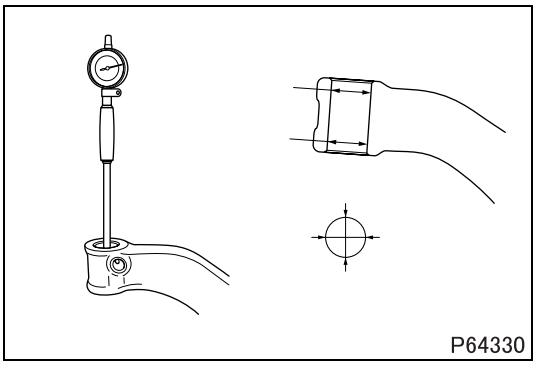

(3) Clearance between kingpin and front axle

- Measure the inner diameter of the axle's hole where the kingpin is inserted using a cylinder gauge and calculate the clearance deducting the outer diameter of the kingpin from the inner diameter.
  If the clearance exceeds the limit, replace the axle or the kingpin with a new one.

◆Installation procedure◆

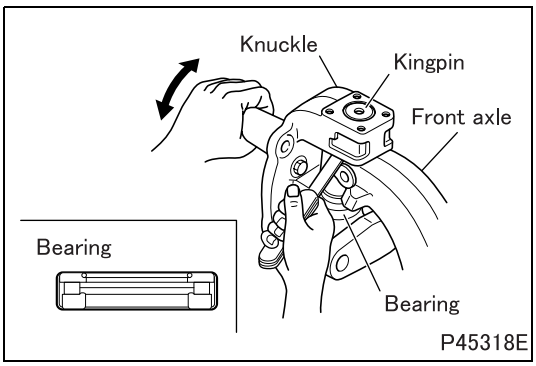

■ **Inspection: Thrust washer, bearing, knuckle and front axle**

[Inspection]

- Provisionally assemble kingpin and bearing, move 2 or 3 times knuckle to have them fit.
- Measure clearance between front axle upper surface and knuckle downside.
- Adjust if the measured value exceeds the limit.

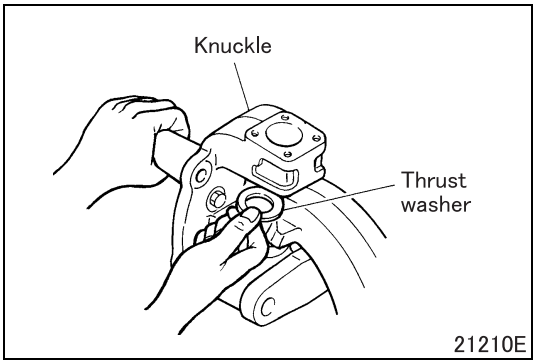

[Adjustment]

- Kinds of adjusting thrust washers
  2.9 to 3.6 mm {0.114 to 0.142 in.} (8 kinds with every 0.1 mm {0.0039 in.} difference)
- Select a thrust washer so as to make clearance as small as possible.
- After assembly, make sure that the knuckle moves smoothly.

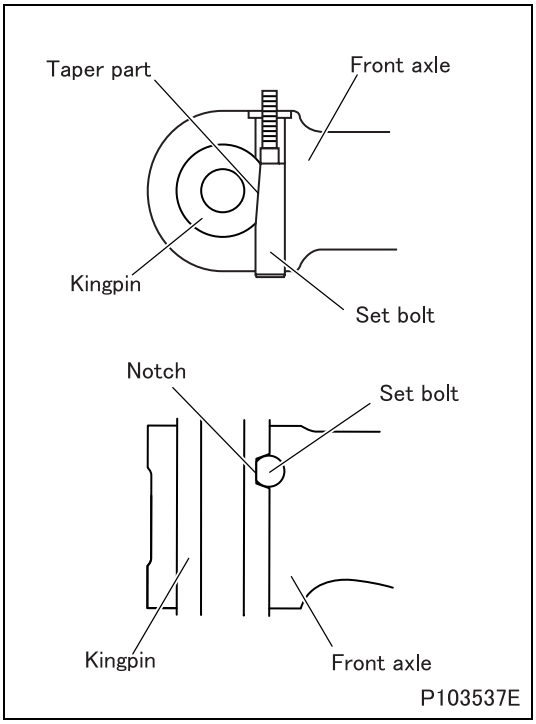

■ **Installation: Set bolt**

- Install the set bolt so that the taper part of the set bolt is aligned with the notch of the kingpin.

◆Work after assembly◆

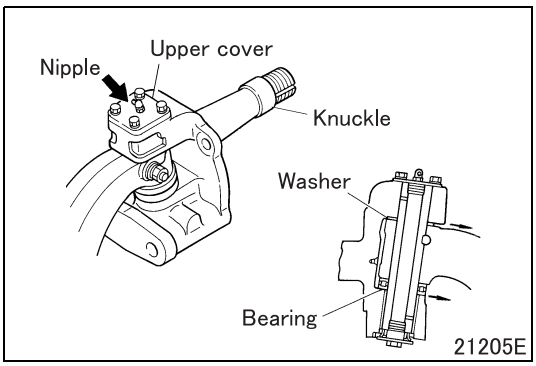

■ **Greasing: Grease nipple**

- Supply grease through the grease nipple of the upper cover.
- Supply grease until it overflows from the thrust washer and press portion of the bearing.

TIE ROD

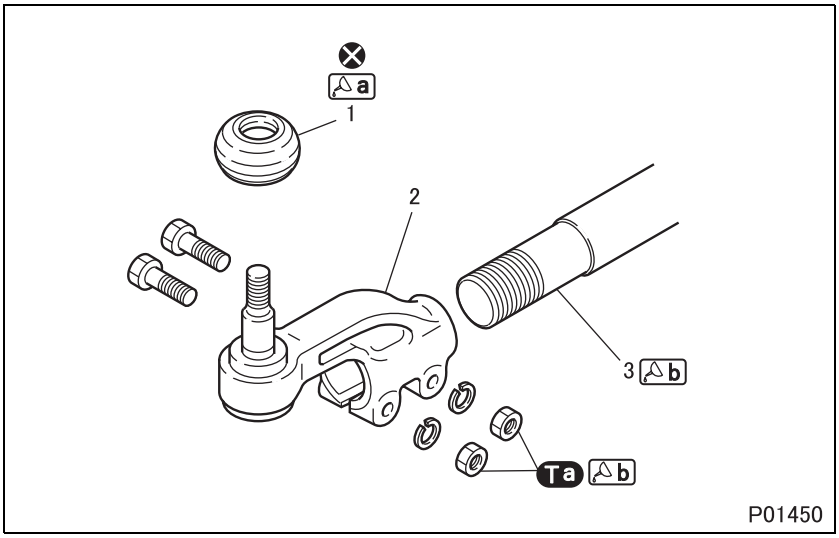

● **Disassembly sequence**

1 Dust cover
2 Tie rod end
3 Tie rod

⊗: Non-reusable parts

● **Assembly sequence**

Follow the disassembly sequence in reverse.

NOTE

- **Do not disassemble the tie rod end, as it is of non-disassembly type.**

Service standards (Unit: mm {in.})

Location	Maintenance item			Standard value	Limit	Remedy
2	Ball joint of tie rod end	Play	430 N {97 lbs, 44 kgf} loaded <FK>	–	0.7 {0.028}	Replace
			500 N {110 lbs, 51 kgf} loaded <FM>			
		Rotation torque		0.5 to 12 N·m {0.4 to 8.9 ft.lbs, 0.05 to 1.2 kgf·m}	–	
3	Bend of tie rod			–	2 {0.079}	Correct or replace

Tightening torque (Unit: N·m {ft.lbs, kgf·m})

Mark	Parts to be tightened	Tightening torque	Remarks
Ta	Nut (tie rod end tightening)	78 ± 12 {58 ± 8.9, 8.0 ± 1.2}	Wet

Lubricant and/or sealant

Mark	Points of application		Specified lubricant and/or sealant	Quantity
a	Lip area of dust cover		Molybdenum disulfide grease [NLGI No.2 (Li soap)]	As required
	Pack inside of the dust cover	FK		8 to 10 g {0.28 to 0.35 oz}
		FM		20 to 21 g {0.71 to 0.74 oz}
b	Nut thread		Chassis grease [NLGI No.1 (Li soap)]	As required

Special tools (Unit: mm {in.})

<table>
<tr><th>Mark</th><th>Tool name and shape</th><th>Part No.</th><th>Application</th></tr>
<tr><td>a</td><td>Dust cover installer
 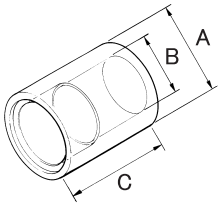

01444
<table><tr><th></th><th>A</th><th>B</th><th>C</th></tr><tr><td>FK</td><td>ϕ63
{2.37}</td><td>ϕ45
{1.77}</td><td>80
{3.15}</td></tr><tr><td>FM</td><td>ϕ65
{2.56}</td><td>ϕ51
{2.01}</td><td>100
{3.94}</td></tr></table></td><td><FK>
MH061828
<FM>
MH061827</td><td rowspan="2">Installation of dust cover</td></tr>
<tr><td>b</td><td>End holder
 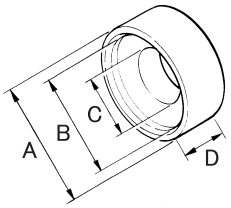

01445
<table><tr><th></th><th>A</th><th>B</th><th>C</th><th>D</th></tr><tr><td>FK</td><td>ϕ60
{2.36}</td><td>ϕ50.5
{1.99}</td><td rowspan="2">ϕ35
{1.38}</td><td rowspan="2">25
{0.98}</td></tr><tr><td>FM</td><td>ϕ64
{2.52}</td><td>ϕ55.7
{2.19}</td></tr></table></td><td><FK>
MH061830
<FM>
MH061829</td></tr>
</table>

◆Inspection procedure◆

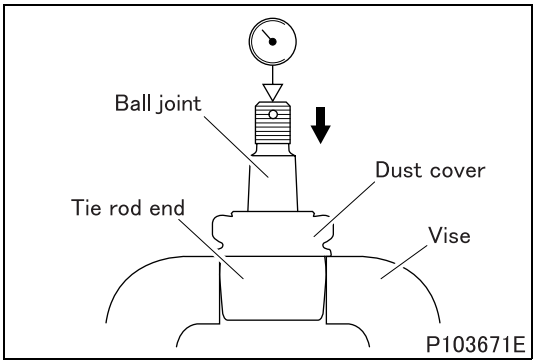

■ **Inspection: Tie rod end**

(1) Play

- Fix the tie rod end with a vise.

CAUTION ⚠

- **Take care not to deform or damage the dust cover when fixing it with a vise.**

- If measured value deviates from the standard value with applying the specified load (pushing) to the ball joint, replace the tie rod end.

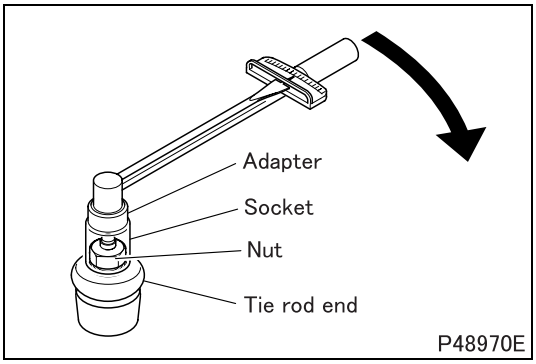

(2) Rotation torque

- Install the tie rod mounting nut on the tie rod end.
- Install the socket, adapter and torque wrench to measure the rotation torque.
- If the measured value deviates from the standard value, replace the tie rod end.

(3) Dust cover

- Check that there are no wear, cracks or damage. These abnormalities can cause water to enter the ball joint, resulting in premature wear.
- If wear, crack, or damage is present, inspect traces of water entry and occurrence of rust in the ball joint. If any abnormality is found, replace the tie rod end. If no abnormality is found, replace the dust cover and reapply grease.

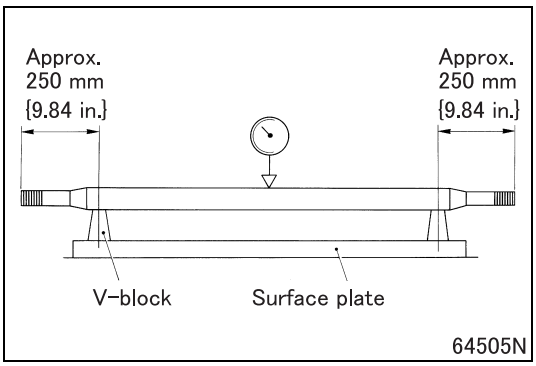

■ **Inspection: Bend of tie rod**

- Measure the bend of the tie rod at its center.

NOTE

- **Give the tie rod one complete turn and read the dial gauge at this time. The bend is one half of the reading.**

- If the measured value exceeds the limit, correct or replace the tie rod.

◆Installation procedure◆

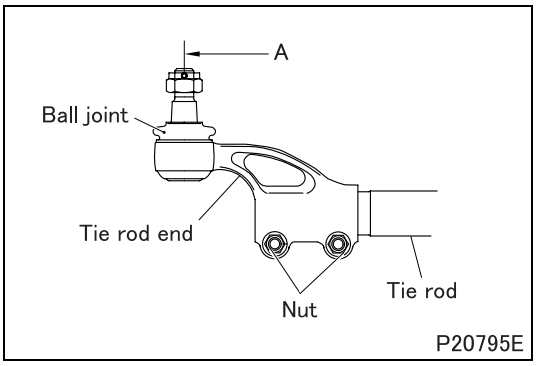

■ **Installation: Tie rod end**

- Install the tie rod end on the tie rod so that the distance between centers of the ball joints of tie rod ends is to the illustrated dimension A, and tighten nuts to the specified torque.

  A: 1678 mm {66.1 in.} <FK>
  1672 mm {65.8 in.} <FM>

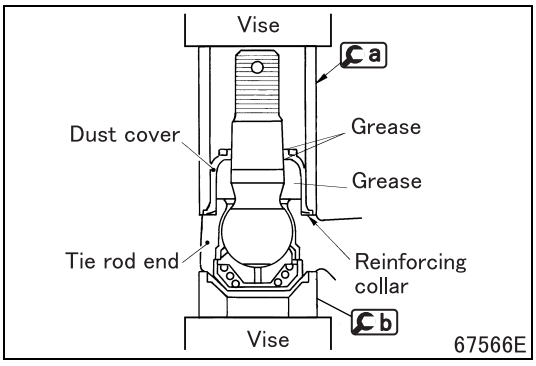

■ **Installation: Dust cover**

- Seal grease in the inside of the dust cover and apply grease to the lip area. Cover the dust cover and tie rod end with a and b as illustrated, and press them using a vise so that the reinforcing collar is brought into intimate contact with the tie rod end.

NOTE

- **Install the dust cover so that it is vertical.**

Group 27

Rear Axle

Table of Contents

Back

Home

MITSUBISHI FUSO TRUCK OF AMERICA, Inc.

Pub.No.TWME0709-27

INDEX

SPECIFICATIONS **27-2**

STRUCTURE AND OPERATION
1. **Wheel Hub and Brake Drum** **27-3**
2. **Reduction and Differential** **27-5**

TROUBLESHOOTING **27-6**

ON-VEHICLE INSPECTION AND ADJUSTMENT
1. **Adjustment of Wheel Speed Sensor Gap** **27-8**
2. **Inspection and Replacement of Differential Oil** **27-10**
3. **Inspection of Wheel Bearing for Play** **27-11**

WHEEL HUB AND BRAKE DRUM **27-12**

AXLE HOUSING **27-32**

REDUCTION AND DIFFERENTIAL **27-36**

SPECIFICATIONS

Item \ Vehicle model		FK61	FK62, FK65	FM
Rear axle	Model	R050T	R052T	R060T
	Type	Banjo type, full floating		
Reduction	Model	D050H	D052H	D8H
	Type	Single-reduction		
	Tooth shape	Hypoid gear		
	Speed reduction ratio	4.444	6.166	4.625 6.666
Differential	Tooth shape	Straight bevel gear		
Gear oil	Grade	* Normal: Maximum air temperature during operation below 40°C {104°F} API GL-5 SAE 90 Hot areas: Maximum air temperature during operation above 40°C {104°F} API GL-5 SAE 140 or 85W-140		
	Quantity L {qts}	6.5 {6.9}		
Mass kg {lb}		Approx. 300 {661}	Approx. 400 {881}	Approx. 610 {1344}

* When used under heavily-loaded, severe conditions such as continuous driving on uphill grades, it is recommended that you use gear oil with a SAE viscosity grade of 140. However, the air temperature must be above 10°C {50°F}.

1. Wheel Hub and Brake Drum

<FK61>

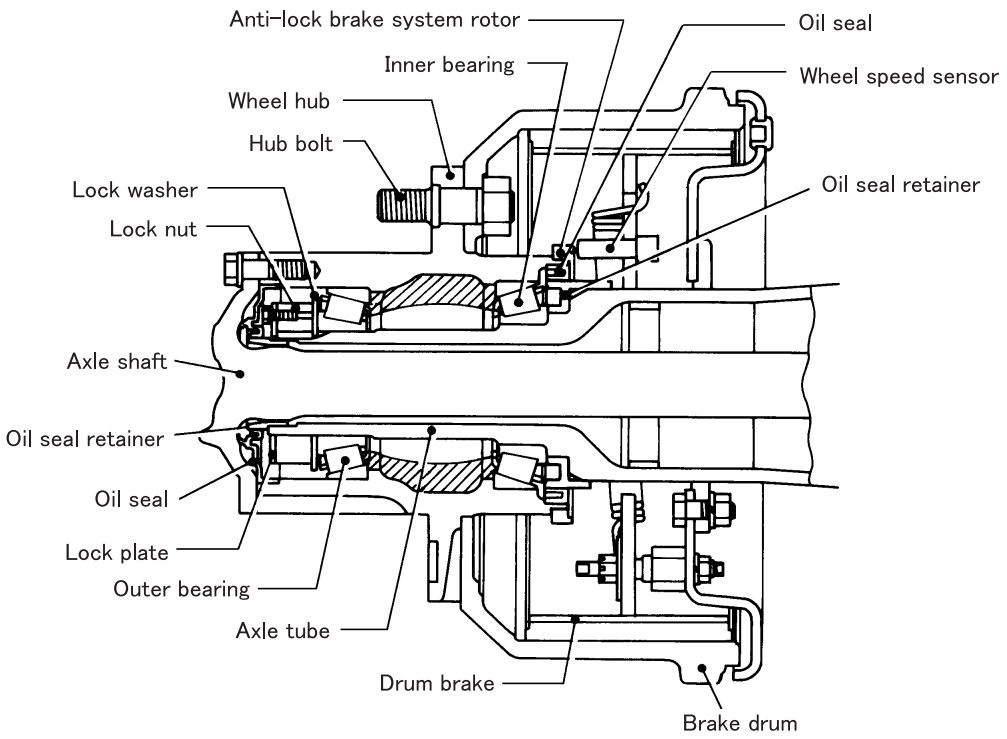

<FK62, FK65>

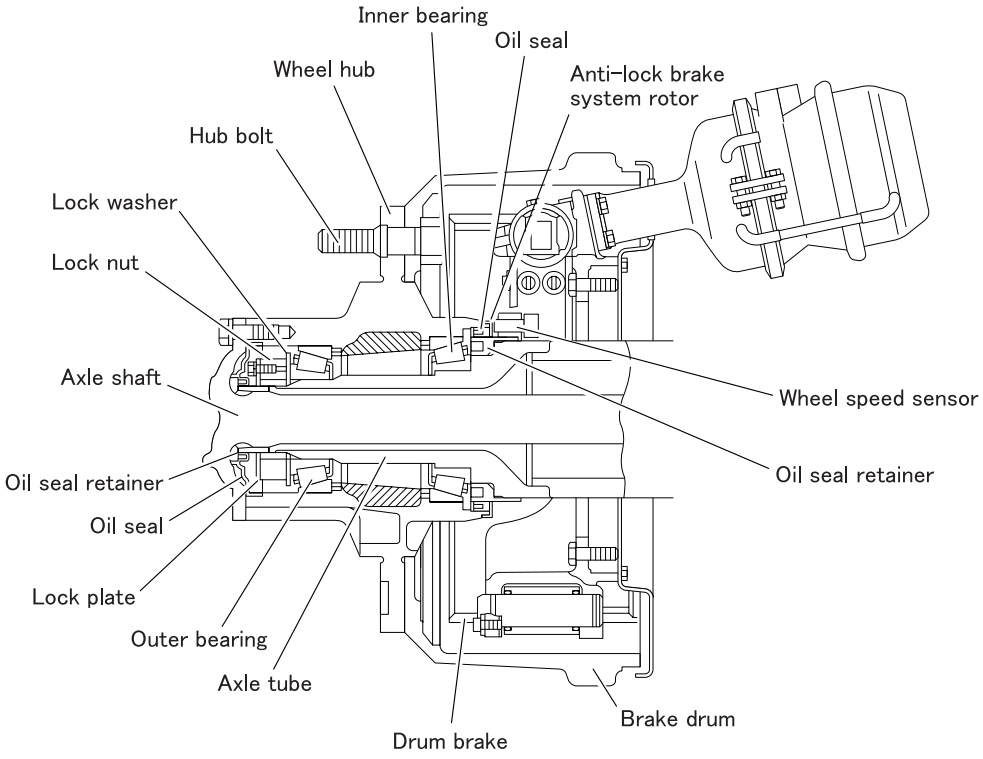

104988E

<FM>

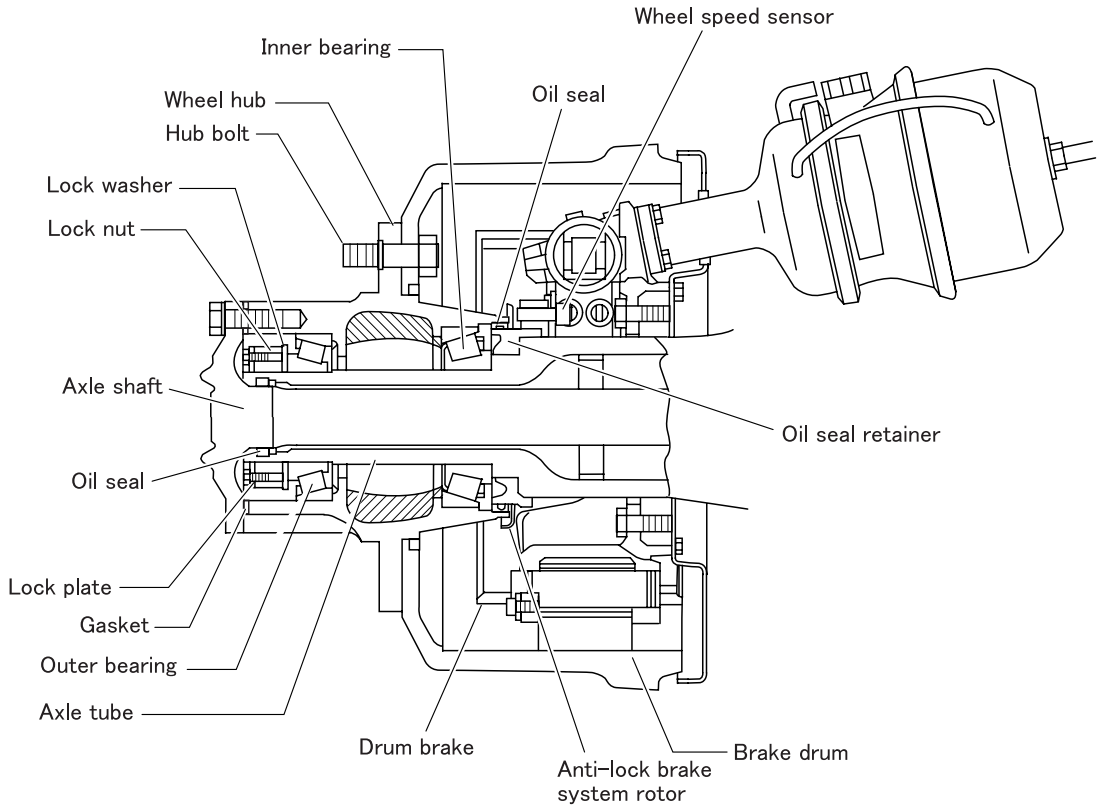
Wheel speed sensor
Inner bearing
Oil seal
Wheel hub
Hub bolt
Lock washer
Lock nut
Axle shaft
Oil seal retainer
Oil seal
Lock plate
Gasket
Outer bearing
Axle tube
Drum brake
Anti-lock brake system rotor
Brake drum

P104989E

2. Reduction and Differential

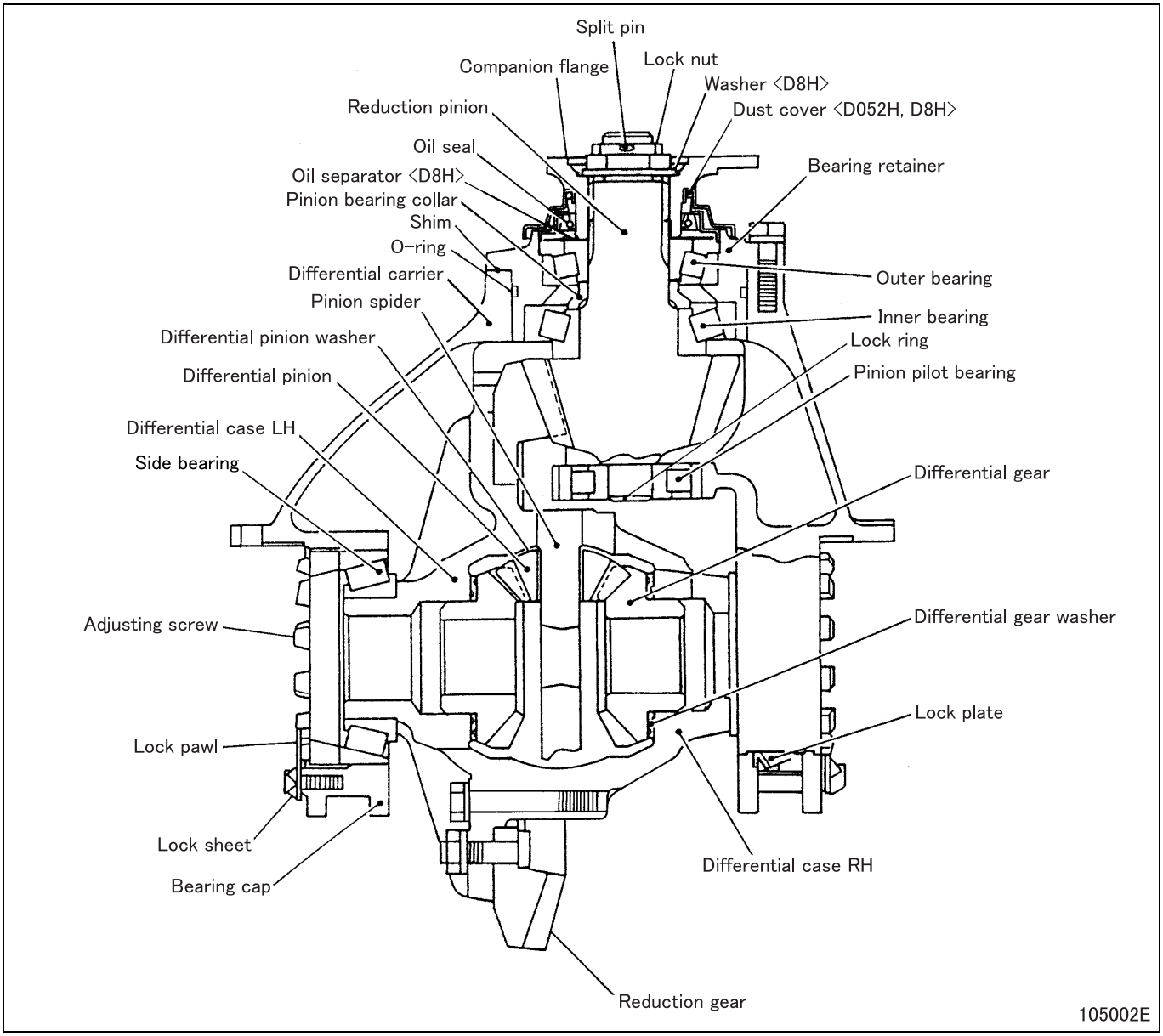

TROUBLESHOOTING

Possible causes	Symptoms	Oil leakage from companion flange	Oil leakage from differential carrier and axle housing	Oil leakage from axle shaft	Power transmission insufficient: Propeller shaft turns but vehicle does not move	Power transmission insufficient: Noise when starting and changing speed	Power transmission insufficient: Continuous noise while cruising	Power transmission insufficient: Intermittent noise while cruising	Power transmission insufficient: Noise while cornering	Power transmission insufficient: Tires drag while cornering	Power transmission insufficient: Seizure	Power transmission insufficient: Breakage	Reference Gr
Wheel hub and axle housing	Axle shaft mounting bolt loose			O				O					
	Axle housing bent						O						
	Axle shaft bent						O						
	Axle shaft fractured				O								
	Axle shaft slips out of engagement				O								
	Oil seal faulty			O									
	Air breather cracked, damaged or clogged			O									
	Wheel hub bearing seized						O						
	Wheel hub bearing worn						O						
	Wheel hub bearing rotation faulty						O						
	Wheel hub bearing broken							O					
Reduction and differential	Gear oil excessive	O											
	Gear oil insufficient					O	O						
	Oil seal faulty	O											
	Sealant faulty		O										
	Side bearing seized						O		O				
	Side bearing worn						O		O				
	Side bearing rotation faulty						O		O				
	Side bearing broken							O					
	Side bearing starting torque excessive						O				O		
	Side bearing starting torque insufficient					O	O		O			O	
	Reduction and differential mounting bolt loose		O										
	Differential carrier and side bearing cap mounting bolts loose							O					
	Differential carrier cracked or damaged		O										
	Reduction gear and differential case mounting bolts loose					O		O					
	Reduction gear or reduction pinion broken				O	O		O	O				
	Reduction gear or reduction pinion worn						O		O				
	Reduction gear and reduction pinion damaged						O						
	Reduction gear backlash excessive					O						O	

Possible causes \ Symptoms		Oil leakage from companion flange	Oil leakage from differential carrier and axle housing	Oil leakage from axle shaft	Power transmission insufficient								Reference Gr
					Propeller shaft turns but vehicle does not move	Noise when starting and changing speed	Continuous noise while cruising	Intermittent noise while cruising	Noise while cornering	Tires drag while cornering	Seizure	Breakage	
Reduction and differential	Reduction gear backlash insufficient						O				O		
	Reduction gear tooth contact adjusted incorrectly						O						
	Reduction pinion starting torque excessive					O	O				O		
	Reduction pinion starting torque insufficient					O	O						
	Reduction pinion lock nut loose	O				O	O						
	Reduction pinion inner bearing and outer bearing seized				O		O						
	Reduction pinion inner bearing or outer bearing worn	O					O						
	Reduction pinion inner bearing or outer bearing broken	O						O					
	Reduction pinion pilot bearing worn						O						
	Reduction pinion pilot bearing seized or damaged							O					
	Pinion spider fractured				O								
	Differential gear or differential pinion broken				O			O	O	O			
	Differential gear or differential pinion seized				O					O			
	Differential gear or differential pinion worn								O	O			
	Differential gear washer worn or damaged							O	O	O			
	Differential gear backlash excessive					O						O	
	Differential gear backlash insufficient								O		O		
	Play between differential gear and axle shaft spline excessive					O						O	

ON-VEHICLE INSPECTION AND ADJUSTMENT

1. Adjustment of Wheel Speed Sensor Gap

Tightening torque (Unit: N·m {ft.lbs, kgf·m})

Mark	Parts to be tightened	Tightening torque	Remarks
–	Bolt (anchor bracket mounting) <FM>	135 {100, 13.8}	–

Special tools

Mark	Tool name and shape	Part No.	Application
a	Adjuster 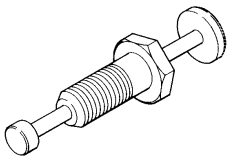 14912	MH062080	Adjustment of wheel speed sensor gap

- The gap between the wheel speed sensor and the rotor is adjusted by screwing in a and thereby pushing in the sensor. Adjust in the following sequence.

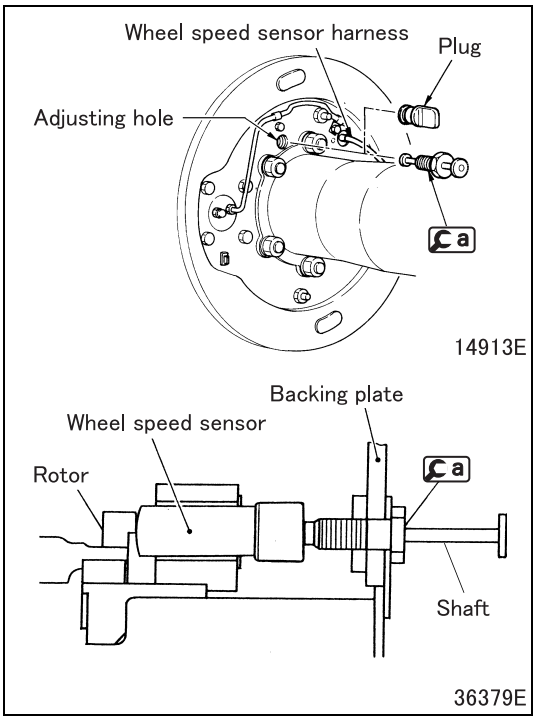

<FK>

- Remove the plug on the back of the backing plate.
- Install a in the adjusting hole.
- Push the shaft of a until the sensor comes into contact with the rotor.
- Never forget to install the plug after adjustment.

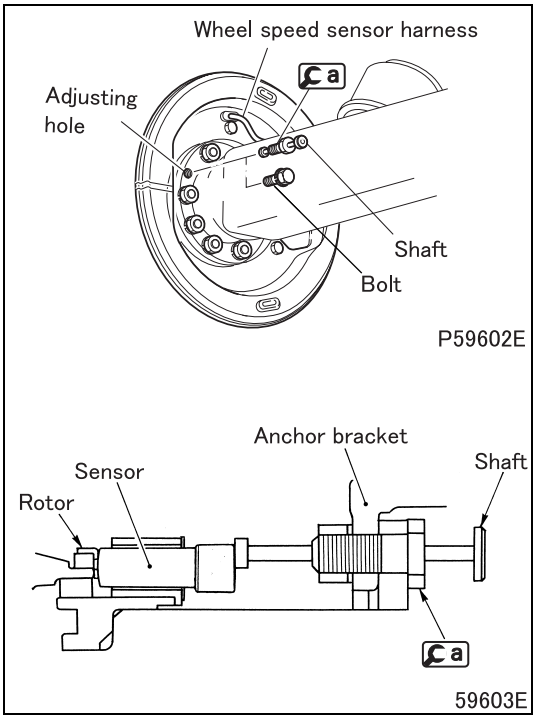

<FM>

- Remove the bolt on the back of the anchor bracket.
- Install a in the adjusting hole.
- Push the shaft of a until the sensor comes into contact with the rotor.
- After adjustment, tighten the bolt to the specified torque.

2. Inspection and Replacement of Differential Oil

Tightening torque (Unit: N·m {ft.lbs, kgf·m})

Mark	Parts to be tightened	Tightening torque	Remarks
–	Inspection plug	110 ± 10 {81 ± 7.4, 11 ± 1}	–
	Drain plug		

Lubricant and/or sealant

Mark	Points of application	Specified lubricant and/or sealant	Quantity
–	Axle housing	Gear oil: Normal: Maximum air temperature during operation below 40°C {104°F} API GL-5 SAE90 Hot areas: Maximum air temperature during operation above 40°C {104°F} API GL-5 SAE140 or 85W-140	6.5 L {6.9 qts}

- Use this oil under heavily-loaded, severe conditions such as continuous driving on uphill grades. However, the air temperature must be above 10°C {50°F}.

WARNING ⚠

- **The oil temperature is high immediately after the vehicle has stopped, so take care not to scald yourself.**

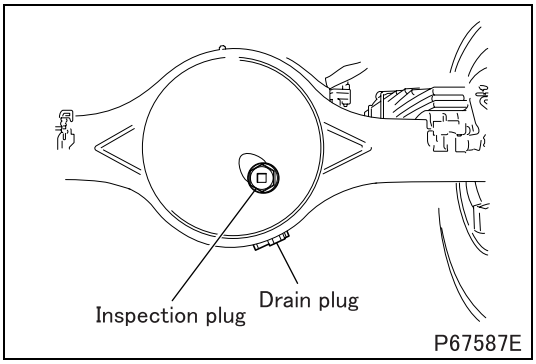

[Inspection]

(1) Inspection of oil quantity

- Remove the inspection plug, and check that oil is filled up to the neck.
- If oil is not sufficient, fill oil from the inspection plug hole up to the neck.

(2) Inspection of oil quality and inclusions

- When draining differential oil, check for oil quality, metal chips and metal powder.
- If an abnormally large amount of metal chips and metal powder is found, disassemble the assembly for service, as abnormalities may be caused inside.

[Replacement]

- Remove the drain plug to drain differential oil. Drainage can be made quickly with the inspection plug removed.
- Fill the specified quantity of differential oil from the inspection plug hole.
- After filling, check that oil is filled up to the neck. If oil is not sufficient, replenish it.

3. Inspection of Wheel Bearing for Play

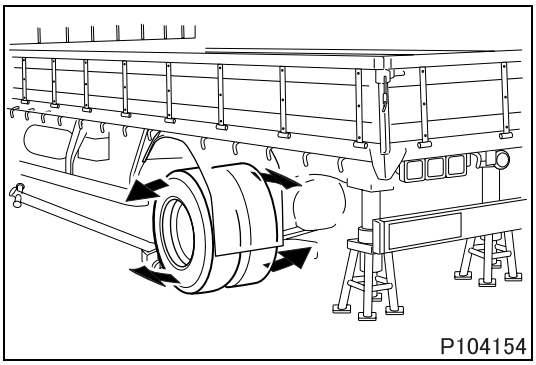

- Jack up the vehicle.
- Try to move the top and bottom of the rear tire by hands in the illustrated directions to inspect the wheel bearing for play.
- If play is found with the feel of hands, repeat the inspection procedure while having the brake pedal pressed by another personnel. When the play is removed by operating the brake pedal, the symptom indicates that there is play in the wheel bearing, not in the suspension or other related parts. Then inspect the turning torque of the wheel bearing and adjust it as required. (See WHEEL HUB AND BRAKE DRUM.)
- If the turning torque of the wheel bearing cannot be adjusted correctly or the play still remains after the adjustment, replace the wheel bearing with a new one. (See WHEEL HUB AND BRAKE DRUM.)

WHEEL HUB AND BRAKE DRUM

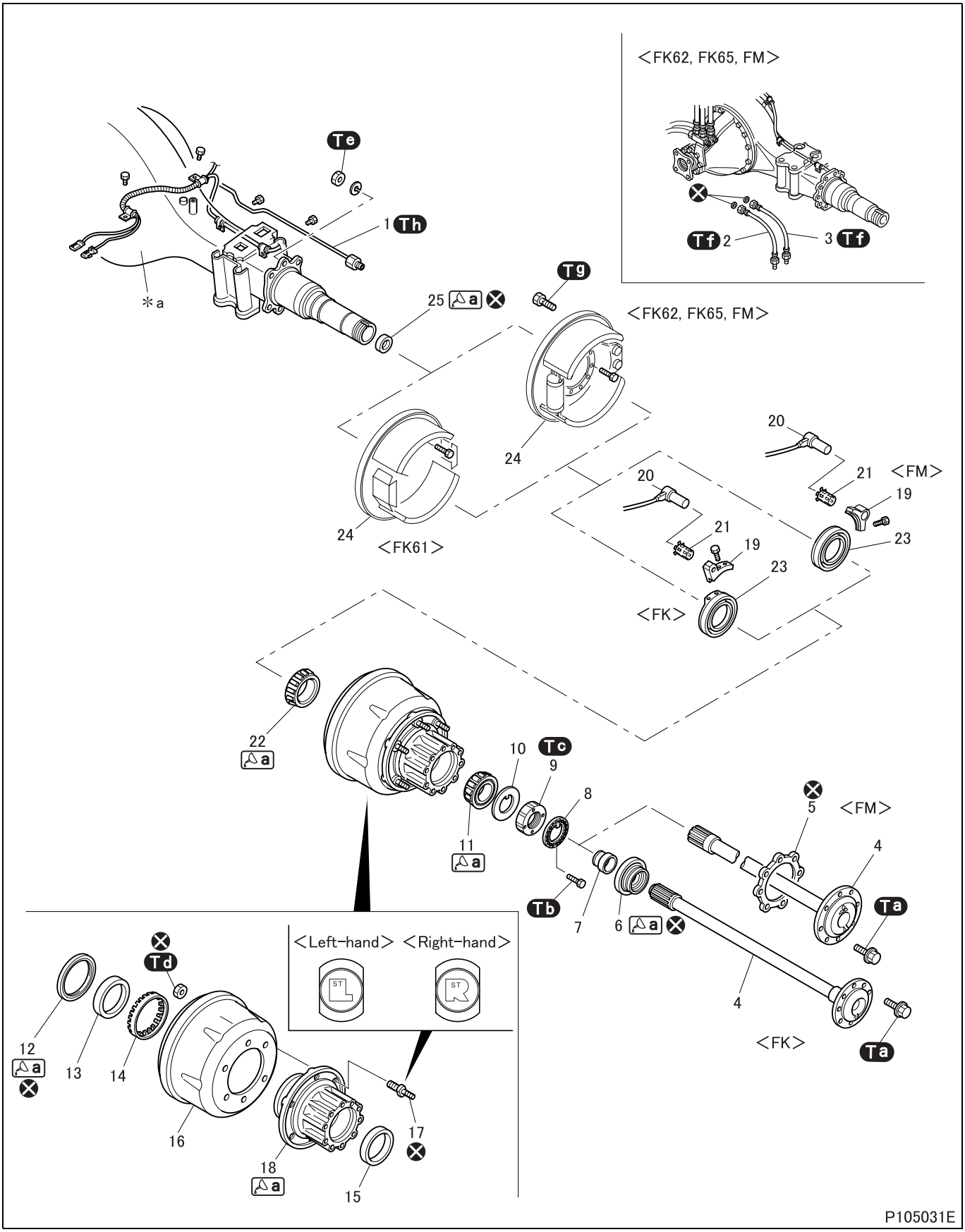

● Disassembly sequence

1 Brake pipe <FK61>
2 Brake hose <FK62, FK65, FM>
3 Brake hose <FK62, FK65, FM>
4 Axle shaft
5 Gasket <FM>
6 Oil seal <FK>
7 Oil seal retainer <FK>
8 Lock plate
9 Lock nut
10 Lock washer
11 Outer bearing inner race
12 Oil seal
13 Inner bearing outer race
14 Anti-lock brake system rotor
15 Outer bearing outer race
16 Brake drum (See Gr35A, B.)
17 Hub bolt
18 Wheel hub
19 Sensor holder
20 Wheel speed sensor
21 Spring spacer
22 Inner bearing inner race
23 Oil seal retainer
24 Drum brake (See Gr35A, B.)
25 Oil seal <FM>

***a**: Axle housing
⊗: Non-reusable parts

CAUTION ⚠

- **Plug the brake pipes and hoses that have been removed to prevent the ingress of dust and other contaminants.**

NOTE

- **Do not disassemble the brake drum and wheel hub unless replacing them.**
- **On the vehicles equipped with a wheel parking brake, release the brake before starting disassembly. <FK62, FK65, FM> (See Gr36B.)**

● Assembly sequence

Follow the disassembly sequence in reverse.

CAUTION ⚠

- **Make sure that the brake lining surface and inner surface of the brake drum of the wheel hub and brake drum are free from grease to avoid malfunction of brakes.**
- **Make sure that the rotor and oil seal are not damaged when installing the wheel hub and brake drum on the axle housing.**
- **Bleed air in the brake system after assembly to avoid malfunction of brakes. <FK61> (See Gr35A.)**
- **After assembly, make the initial adjustment of the brake drum-to-shoe clearance. (See Gr35A, B.)**
- **After assembly, make the adjustment of wheel speed sensor gap. (See "ON-VEHICLE INSPECTION AND ADJUSTMENT".)**

WHEEL HUB AND BRAKE DRUM

Service standards (Unit: mm {in.})

Location	Maintenance item			Standard value	Limit	Remedy
–	Starting torque of wheel hub bearing (tangential force at hub bolt position with oil seal assembled)			2.5 to 5.4 N·m {1.8 to 4.0 ft.lbs, 0.25 to 0.55 kgf·m} <FK61> (tangential force: 22 to 48 N {4.9 to 11 lbs, 2.2 to 4.9 kgf}) <FK62, FK65, FM> (tangential force: 18 to 38 N {4 to 8.6 lbs, 1.8 to 3.9 kgf})	–	Adjust or replace
3	Axle shaft	Bend at center		0 to 1.0 {0 to 0.039}	2.0 {0.079}	Replace
		Bend at flange face	FK	0 to 0.04 {0 to 0.0016}	0.5 {0.020}	Replace
			FM	0 to 0.05 {0 to 0.0020}		
14	Anti-lock brake system rotor shakes			0.05 {0.0020} or less	0.1 {0.0039}	Replace
16	Brake drum	Inside diameter	FK61	320 {12.59}	322 {12.67} ※321 {12.63}	Repair or replace
			FK62, FK65	370 {14.57}	372 {14.65} ※371 {14.61}	
			FM	410 {16.14}	414 {16.30} ※412 {16.22}	
		Cylindricity		0.05 {0.0020}	0.2 {0.0079}	

※ Shows the correction limit value.

Tightening torque (Unit: N·m {ft.lbs, kgf·m})

Mark	Parts to be tightened		Tightening torque	Remarks
Ta	Bolt (axle shaft mounting)	FK	108 {80, 11}	–
		FM	270 {200, 27.7}	
Tb	Bolt (lock plate mounting)		6.9 to 10.8 {5.1 to 8.0, 0.7 to 1.1}	–
Tc	Lock nut	FK	200 {145, 20}	Back-off angle 22.5° (1/16 of a turn)
		FM	300 {215, 30}	
Td	Nut (wheel hub and brake drum mounting)		322 {235, 32.8}	–
Te	Nut (drum brake mounting)	FK	76 {56, 7.8}	–
		FM	135 {100, 13.8}	
Tf	Brake hose (T-connector side)		41.7 ± 2.5 {31 ± 1.8, 4.25 ± 0.25}	–
Tg	Bolt (anchor bracket mounting) <FM>		135 {100, 13.8}	–
Th	Brake pipe <FK61>		12 to 14 {8.9 to 10.0, 1.2 to 1.4}	–

Lubricant and/or sealant

Mark	Points of application		Specified lubricant and/or sealant	Quantity
a	Lip area of oil seal		Wheel bearing grease [NLGI No.2 (Li soap)]	As required
	Pack space between rollers of bearing inner race			
	Pack inside of wheel hub	FK61		280 g {9.88 oz} ※
		FK62, FK65		700 ± 20 g {24.7 ± 0.71 oz} ※
		FM		1100 g {38.8 oz} ※

※ For a wheel

Special tools (Unit: mm {in.})

<table>
<tr><th>Mark</th><th>Tool name and shape</th><th>Part No.</th><th>Application</th></tr>
<tr><td>a</td><td>Socket wrench
<table><tr><th></th><th>A</th></tr><tr><td>FK</td><td>95
{3.74}</td></tr><tr><td>FM</td><td>120
{4.72}</td></tr></table> 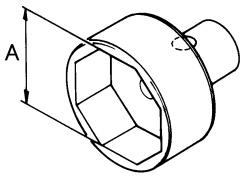
00969</td><td><FK>
MH061597
<FM>
MH061536</td><td>Removal and installation of lock nut</td></tr>
<tr><td rowspan="2">b</td><td>A: Wheel hub puller
B: Adapter
<table><tr><th>D</th><th>E</th><th>F</th></tr><tr><td>ϕ255.25
{8.75}</td><td>ϕ70
{2.76}</td><td>ϕ66
{2.60}</td></tr></table> 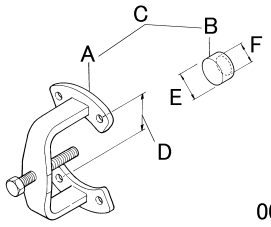
00972</td><td><FK61>
A: MH061966
B: MH061962
or
C: MH061017</td><td rowspan="2">Removal of wheel hub and brake drum</td></tr>
<tr><td>Wheel hub puller
 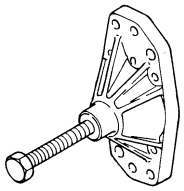
00973</td><td><FK62, FK65, FM>
MH061458</td></tr>
<tr><td>c</td><td>Anti-lock brake system oil seal installer
<table><tr><th></th><th>A</th><th>B</th></tr><tr><td>FK</td><td>ϕ144
{5.67}</td><td>ϕ130
{5.12}</td></tr><tr><td>FM</td><td>ϕ170
{6.69}</td><td>ϕ155
{6.10}</td></tr></table> 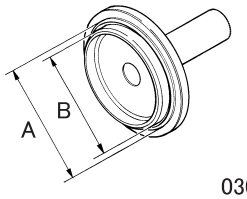
03023</td><td><FK>
MH062664
<FM>
MH062057</td><td>Installation of oil seal</td></tr>
<tr><td>d</td><td>Wheel hub inner bearing installer
<table><tr><th></th><th>A</th><th>B</th></tr><tr><td>FK</td><td>ϕ128
{5.04}</td><td>ϕ122.5
{4.82}</td></tr><tr><td>FM</td><td>ϕ158
{6.22}</td><td>ϕ146
{5.75}</td></tr></table> 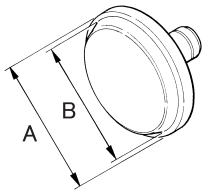
00974</td><td><FK>
MH061010
<FM>
03723-21000</td><td>Installation of inner bearing outer race</td></tr>
<tr><td>e</td><td>Wheel hub outer bearing installer
<table><tr><th></th><th>A</th><th>B</th></tr><tr><td>FK</td><td>ϕ118
{4.65}</td><td>ϕ112
{4.41}</td></tr><tr><td>FM</td><td>ϕ148
{5.83}</td><td>ϕ138
{5.43}</td></tr></table> 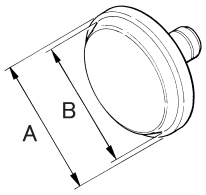
00974</td><td><FK>
MH061012
<FM>
03723-20000</td><td>Installation of outer bearing outer race</td></tr>
<tr><td>g</td><td>Wheel bearing installer
<table><tr><th>A</th><th>B</th><th>C</th><th>D</th></tr><tr><td>ϕ89.1
{3.51}</td><td>ϕ83
{3.27}</td><td>ϕ73
{2.87}</td><td>210
{8.27}</td></tr></table> 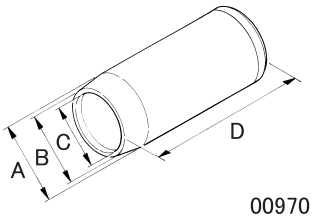
00970</td><td><FK>
MH061009</td><td>Installation of inner bearing inner race</td></tr>
</table>

Mark	Tool name and shape	Part No.	Application
h	Oil seal retainer installer 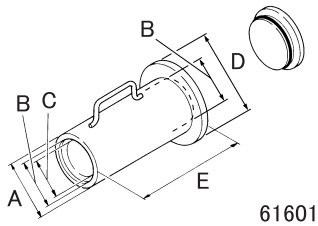 61601 A: ϕ105 {4.13} B: ϕ93 {3.66} C: ϕ91 {3.58} D: ϕ155 {6.10} E: 250 {9.84}	<FM> 03723-31001	Installation of oil seal retainer and inner bearing inner race
i	A: Gear puller B: Adapter C: Oil seal retainer puller adapter 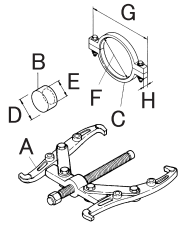 00976 D: FK ϕ70 {2.76}, FM ϕ95 {3.74} E: FK ϕ66 {2.60}, FM ϕ91 {3.58} F: FK –, FM ϕ146 {5.75} G: FK –, FM 240 {9.45} H: FK –, FM 19 {0.75}	A: MH061102 B: <FK> MH061962 <FM> MH061103 C: <FM> 03724-16000	Removal of inner bearing inner race and oil seal retainer
j	Oil seal retainer installer 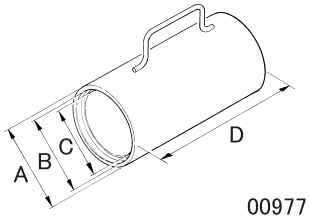 00977 A: ϕ110 {4.33} B: ϕ98 {3.86} C: ϕ90.3 {3.56} D: 225 {8.86}	<FK> MH061008	Installation of oil seal retainer
k	Oil seal installer 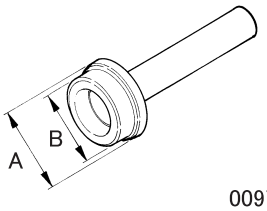 00979 A: ϕ85 {3.35} B: ϕ60 {2.36}	<FM> MH062016	Installation of oil seal at axle tube end
l	Anti-lock brake system hub stopper 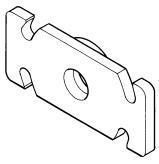 04677 Note: Not being used in U.S. Market	<FM> MH062058	Installation of wheel hub & brake drum

◆Removal procedure◆

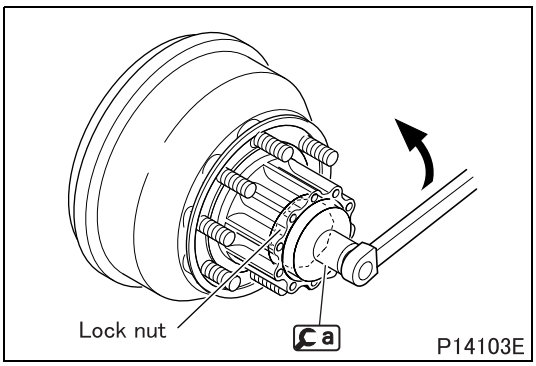

■ **Removal: Lock nut**

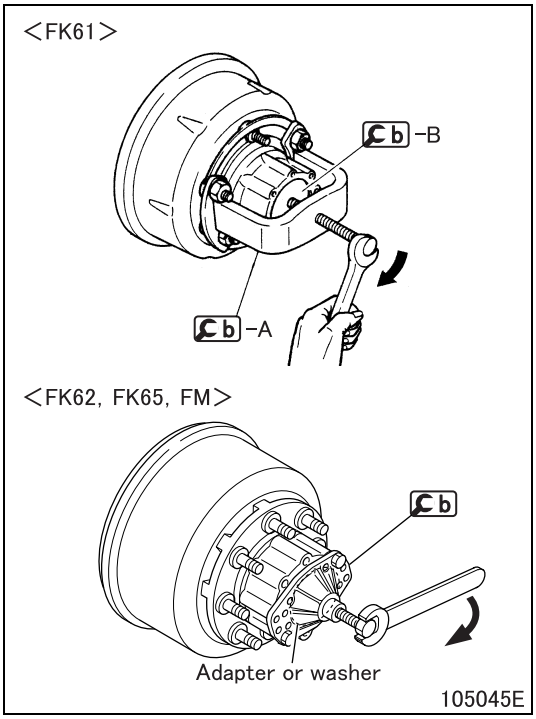

■ **Removal: Wheel hub and brake drum**

- If the brake drum has stepped wear and the wear prevents the wheel hub and brake drum assembly from being removed, the removal can still be effected by taking the following procedure. After removal, correct or replace the brake drum.

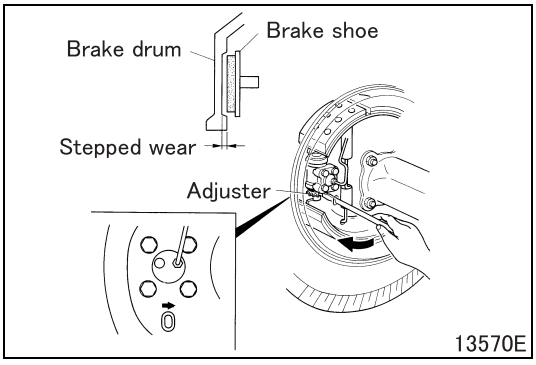

<FK61>

- Turn the adjuster from the adjusting hole in the opposite direction to the arrow on the backing plate to increase the clearance between the brake drum and the brake shoe. Then, remove the wheel hub and brake drum.

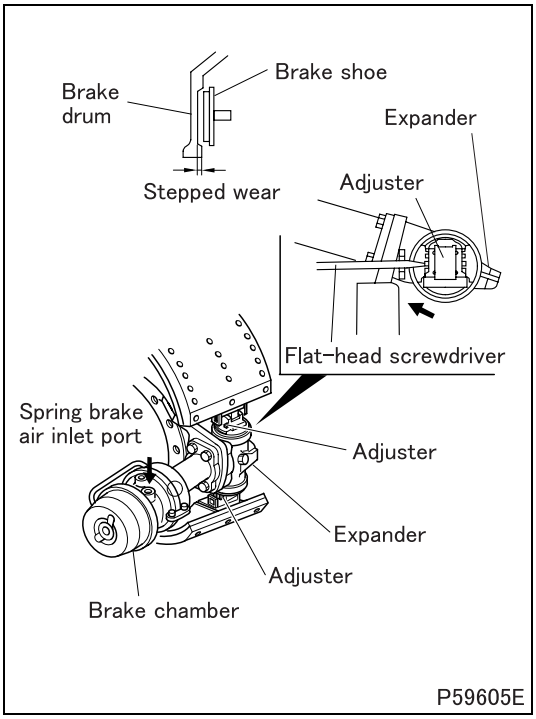

<FK62, FK65, FM>

- Remove the dust cover behind the anchor bracket.
- Release the spring brake. (See Gr35B.)
- Turn the adjuster on the expander in the direction of the arrow to increase the clearance between the brake drum and shoe. Then, remove the wheel hub and brake drum.
- Install the dust cover behind the anchor bracket.

CAUTION ⚠

- **When using a flat-head screwdriver to turn the adjuster, take care not to damage the boots on the expander.**

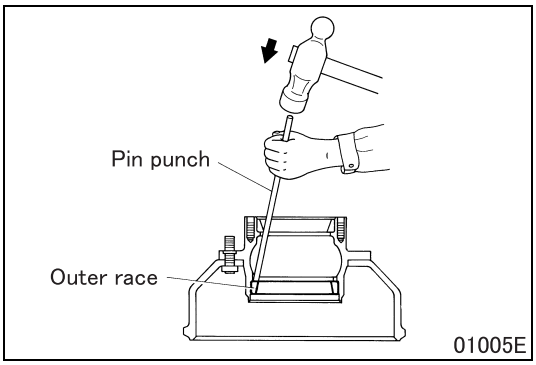

■ Removal: Inner bearing outer race

- Drive out the inner bearing outer race by tapping evenly at four notches in the wheel hub.

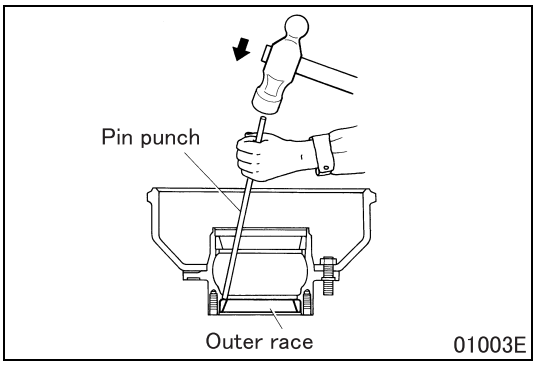

■ Removal: Outer bearing outer race

- Drive out the outer bearing outer race by tapping it evenly at four notches in the wheel hub.

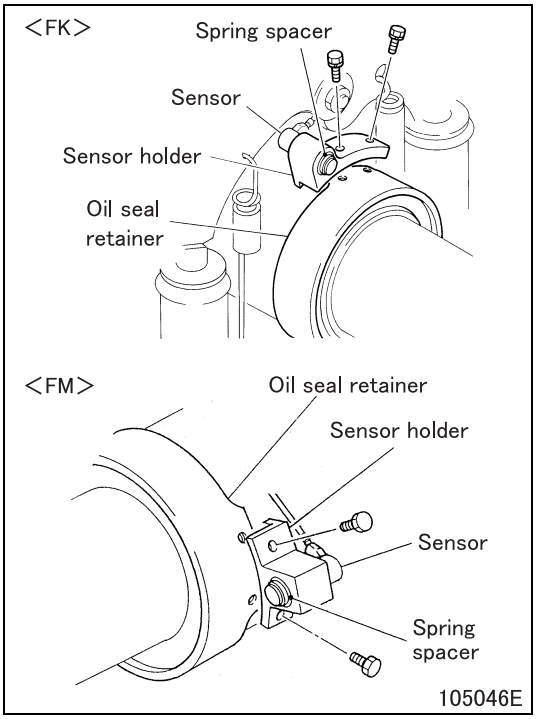

■ **Removal: Sensor holder, wheel speed sensor and spring spacer**

- Remove the wheel speed sensor complete with the sensor holder and spring spacer from the oil seal retainer.

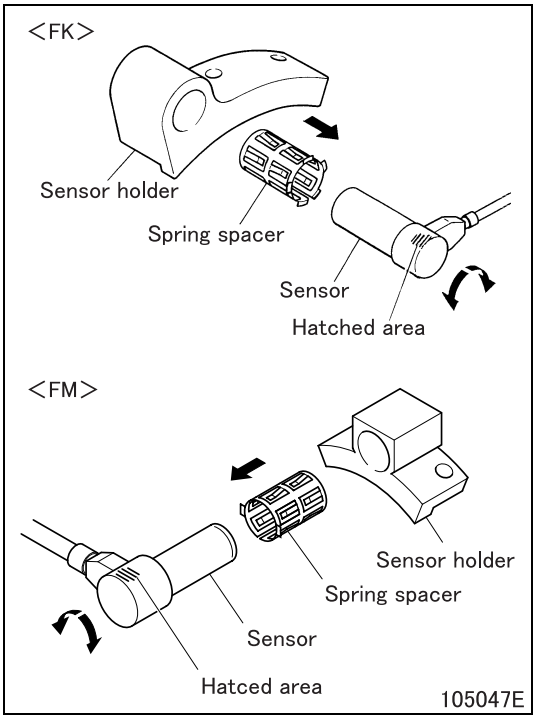

- Pinch hatched area of the wheel speed sensor with pliers and remove it while turning it a little.
- If the wheel speed sensor can be removed easily, replace the spring spacer.

CAUTION ⚠

- **When pinching the wheel speed sensor with pliers, do not pinch other areas than the hatched area.**
- **When removing the wheel speed sensor, never apply excessive force to the sensor, such as hitting with a hammer, prying with a screwdriver or pulling the harness, since these actions can result in the breaking of wire.**

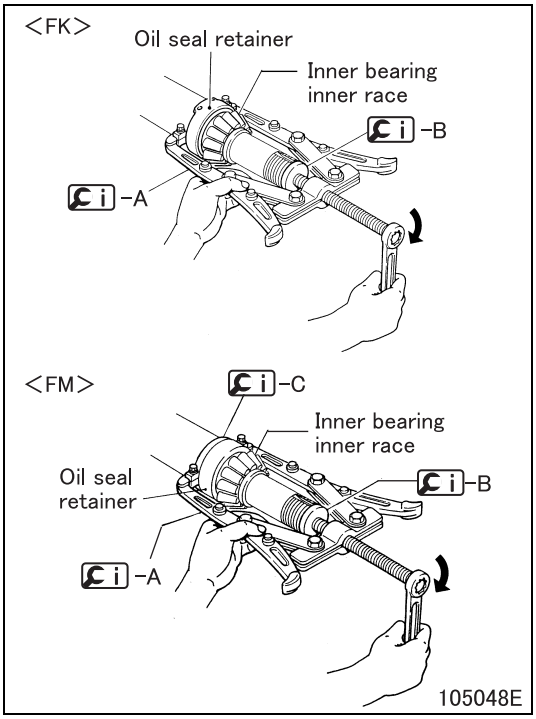

■ **Removal: Inner bearing inner race and oil seal retainer**

◆**Inspection procedure**◆

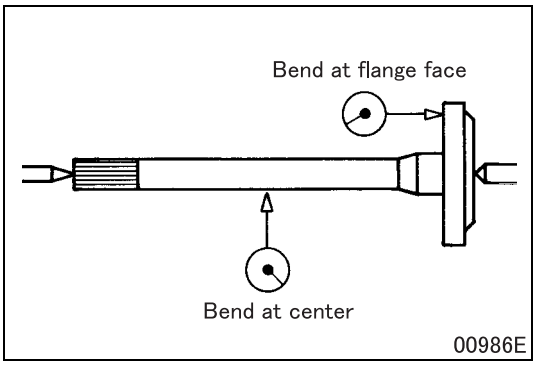

■ **Inspection: Axle shaft**

- Perform the following inspection. If the measurement exceeds the limit, replace the axle shaft.

(1) Bend at shaft center

NOTE

- **Give the axle shaft one complete turn and read the dial gauge at this time. The bend is one half of the reading.**

(2) Bend at flange face

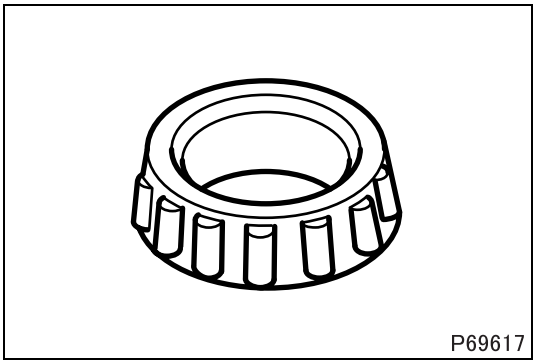

■ **Inspection: Outer bearing inner race**

- Inspect the outer bearing inner race after cleaning the bearing to remove grease completely.
- If any damage, wear, or poor rotating condition is evident in the inner race, replace it with a new one.
- The inner race and the outer race should be replaced as a set.

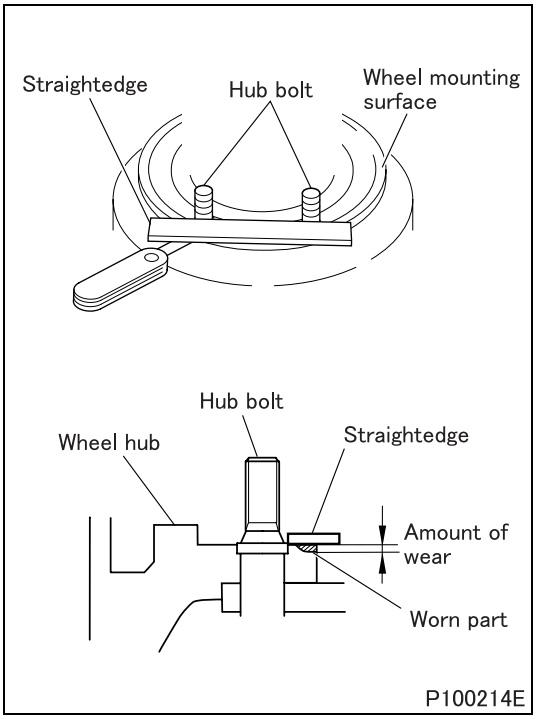

■ **Inspection: Wheel hub**

(1) Visual inspection

- Check the disc wheel mounting surface of the wheel hub by watching and touching. If there is damage or crack on it, replace the wheel hub.
- Make sure that there is not rust, dust, paint or foreign body on the disc wheel mounting surface of the wheel hub to prevent the wheel nut to loosen.
- If any abnormality is found, remove it with sandpaper.

(2) Wear in disc wheel mounting part of wheel hub

- Clean the wheel mounting surface of the wheel hub before inspection.
- Place a straight edge on the hub so as to contact to the two hub bolts on the disc wheel mounting surface.

CAUTION ⚠

- **Make sure that the straight edge does not run onto the hub bolt.**

- Using feeler gauges to measure the amount of wear at the outer periphery of the wheel hub.
  Measure the amount of wear in the area of every hub bolt.
- If the amount of wear at any point exceeds the following standard value, inspect the crack check of wheel hub.
  Wear standard value: 0.8 mm {0.031 in.}

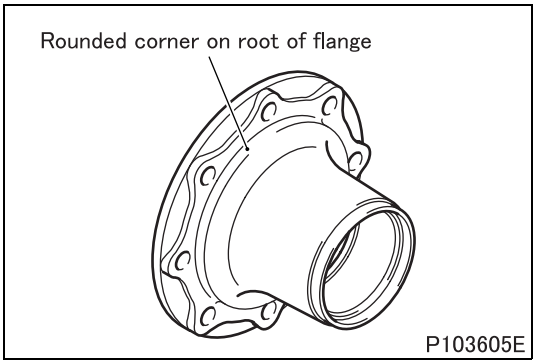

(3) Crack check

- Check if there is not crack on the entire rounded corner on the root of flange of the wheel hub by magnetic particle or liquid penetrant testing. If crack is found, replace the wheel hub.
- If crack is found on the wheel hub bolt, replace it.
- If there is crack or stepped wear on the wheel hub mounting surface of wheel disc, replace it. (See Gr31.)

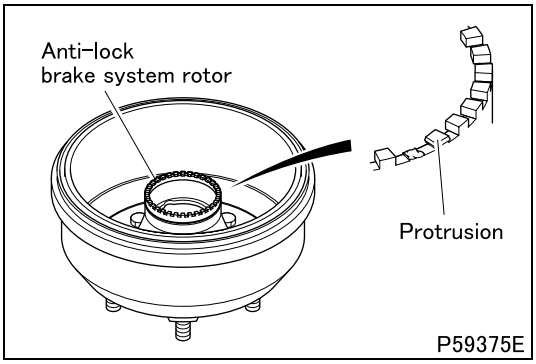

■ **Inspection: Anti-lock brake system rotor**

[Inspection]

- Check the protrusions of the anti-lock brake system rotor for chipping and flattening.
- If any abnormality is found, replace the anti-lock brake system rotor.

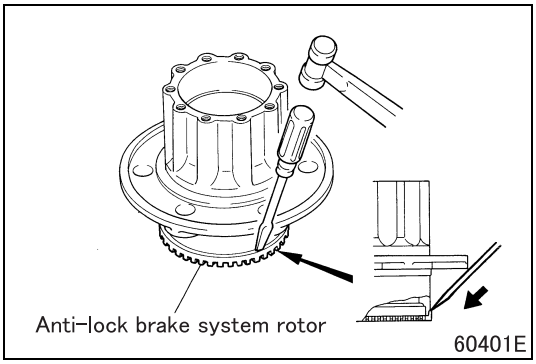

Replacement of anti-lock brake system rotor
[Removal]

- Drive out the anti-lock brake system rotor by tapping evenly at its circumference using a flat-blade screwdriver.

CAUTION ⚠

- **Be careful not to damage the wheel hub.**

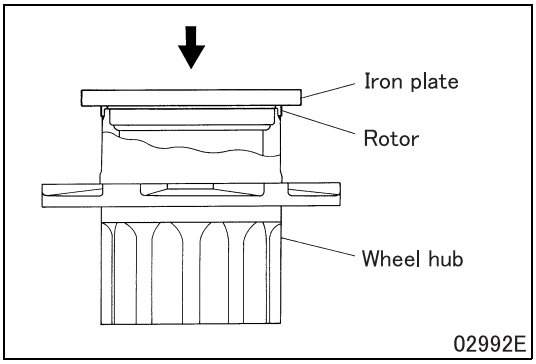

[Installation]

- Warm the anti-lock brake system rotor to approximately 150°C {302°F}, press it evenly using an iron plate, and press it into the wheel hub so that there is no clearance between the wheel hub and the anti-lock brake system rotor.

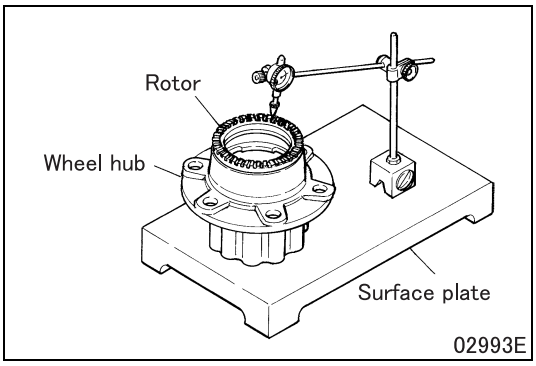

[Inspection]

- If runout is out of the standard value, reassemble.
- If runout is out of the standard value after reassembly, replace the defective part(s).

■ Inspection: Inner bearing inner race

- Inspect the inner bearing inner race in the same manner as for the outer bearing inner race.
  (See "■ **Inspection: Outer bearing inner race**".)

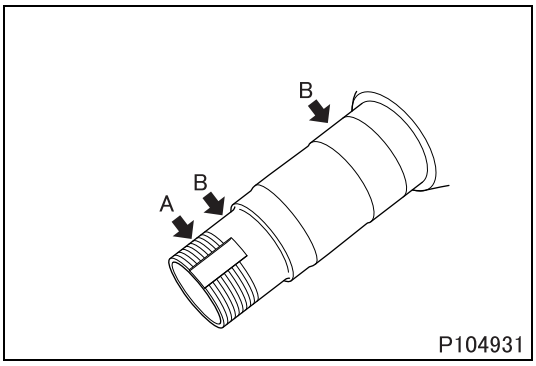

■ Inspection: Axle housing

- If the lock nut tightening threads (A) are damaged, repair the damage using a dice to ensure accurate adjustment of starting torque.
- Replace the axle housing if it apparently has stepped, tapered, uneven or other abnormal wear or damage in the outer bearing fitting surface (B).

◆Installation procedure◆

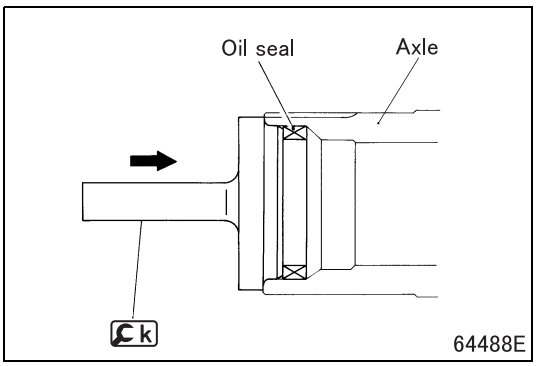

■ **Installation: Oil seal <FM>**

- Install the oil seal evenly along its periphery against the end of the wheel hub.

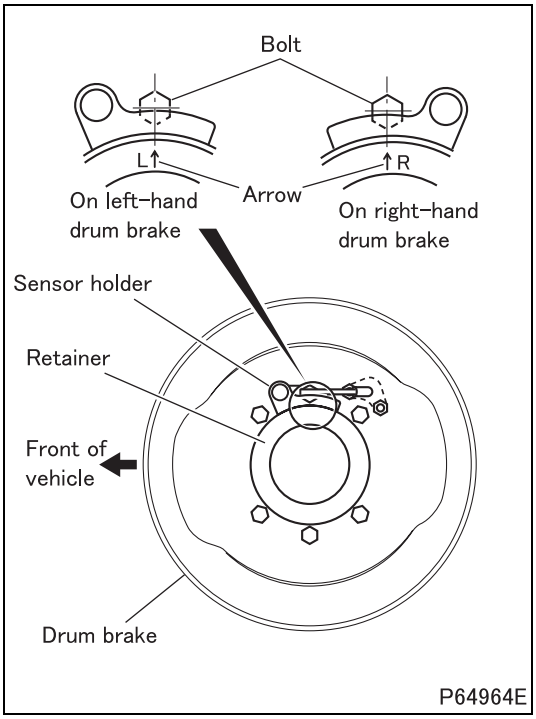

■ **Installation: Inner bearing race, oil seal retainer**

<FK>

- Install the oil seal retainer such that the center of the sensor holder retaining bolt is aligned with the center line of the brake rataining bolt.

NOTE

- **The illustration on the left shows the left-hand drum brake.**

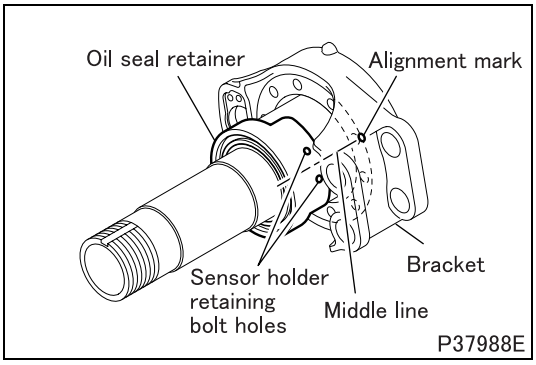

<FM>

- Ensure that the anchor bracket is provided with alignment mark at the location shown in the illustration.
- Install the oil seal retainer such that the middle line between the sensor holder retaining bolt holes is aligned with the alignment mark on the anchor bracket.

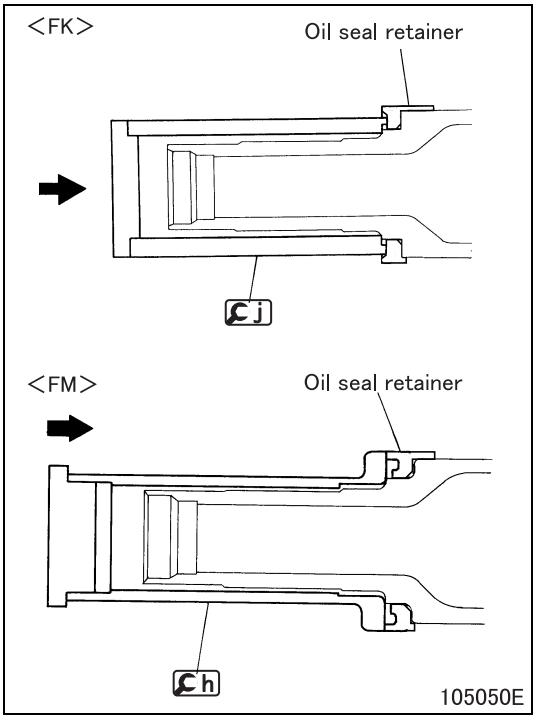

- Install the oil seal retainer until it bottoms out.

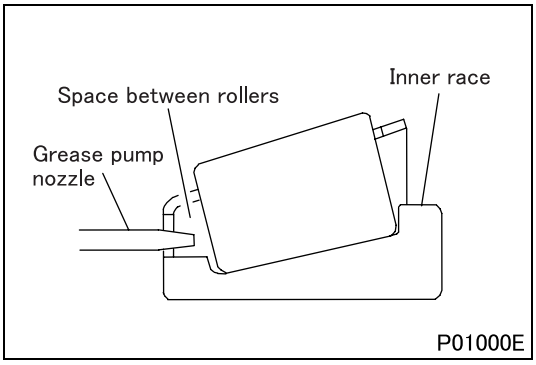

■ **Installation: Packing grease in inner bearing inner race**

- Insert the grease pump nozzle into the space between rollers of the inner bearing inner race to pack grease sufficiently.

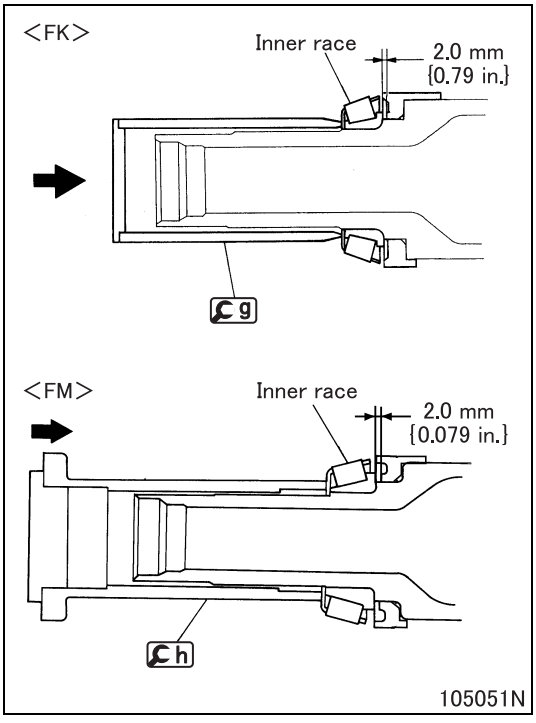

■ **Installation: Inner bearing inner race**

- With the inner bearing inner race press-fitted, ensure that the clearance between the inner race and the oil seal retainer is as shown in the illustration.

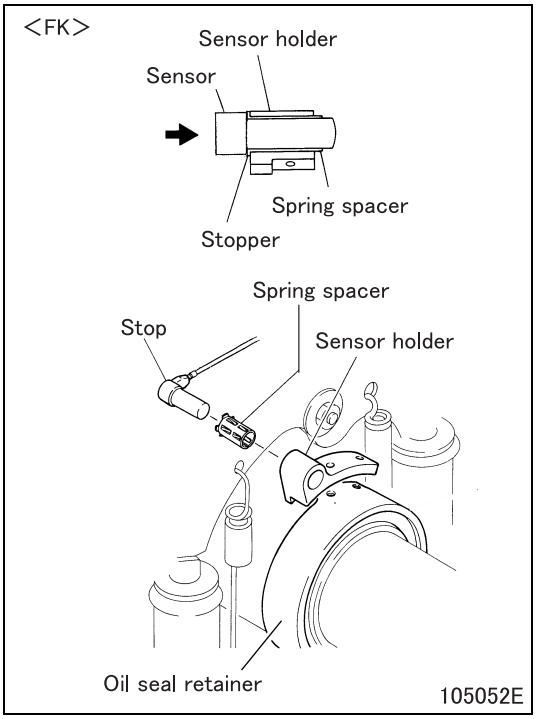

■ **Installation: Sensor holder, wheel speed sensor and spring spacer**

- From the anchor bracket side, insert the wheel speed sensor into the sensor holder until the stop of the spring spacer and that of the sensor come into contact with the sensor holder.
- Install the assembly of wheel speed sensor, sensor holder and spring spacer onto the oil seal retainer.

CAUTION ⚠

- **When installing the wheel speed sensor, never apply excessive force to the sensor, such as hitting with a hammer, prying with a screwdriver or pulling the harness, since these actions can result in the breaking of wire.**

NOTE

- **Do not install the right-hand wheel speed sensor on the left-hand wheel, and vice versa.**

Location	Connector color	Connector shape
Left-hand side	Gray	Male
Right-hand side	Black	Female

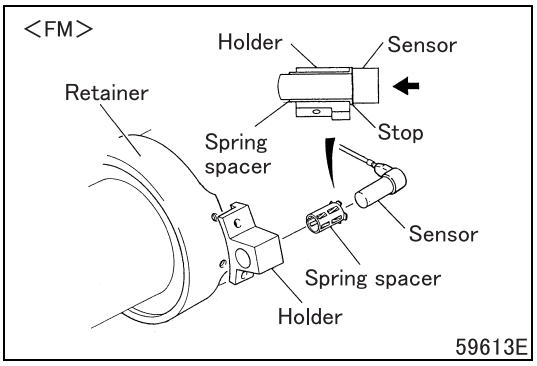

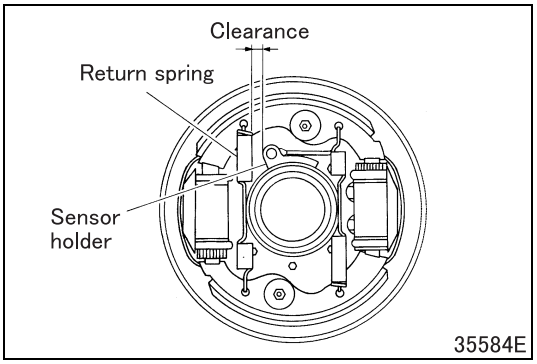

<FK61>

- After installation, ensure that there is at least a 5 mm {0.020 in.} clearance between the sensor holder and return spring. Also, ensure that the wheel speed sensor is free from interference with other parts. The illustration on the left shows the left-hand drum brake.

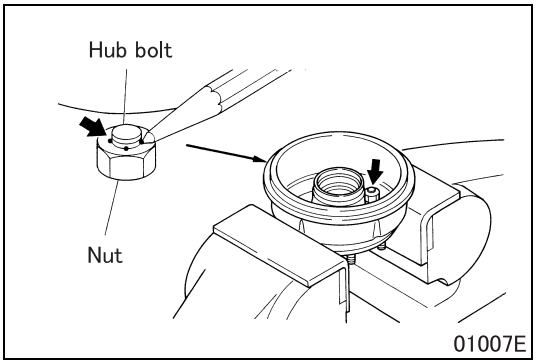

■ **Installation: Hub bolts**

- As for hub bolt, tighten nut at specified torque, and caulk at 4 positions for prevention of loosening.

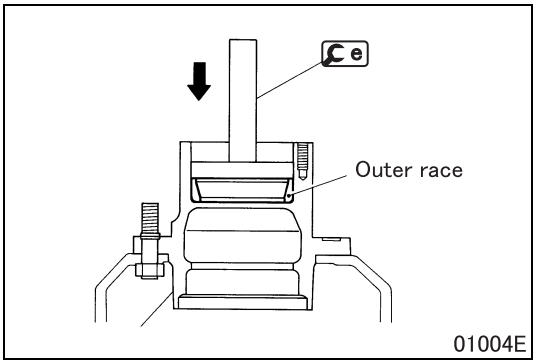

■ **Installation: Outer bearing outer race**

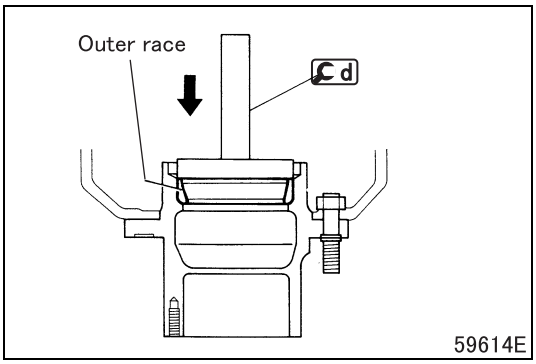

■ **Installation: Inner bearing outer race**

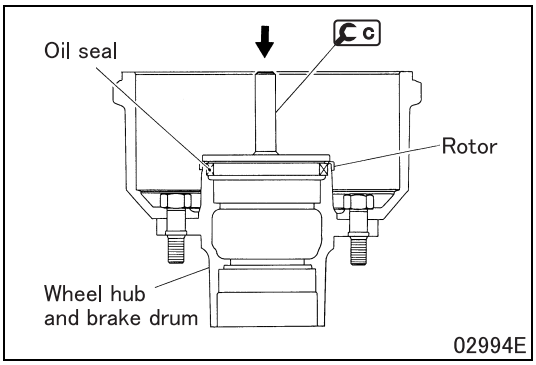

■ **Installation: Oil seal**

- Use c when press-fitting the oil seal to the wheel hub with the anti-lock brake system rotor already installed.
- Apply grease on the lip of the oil seal.

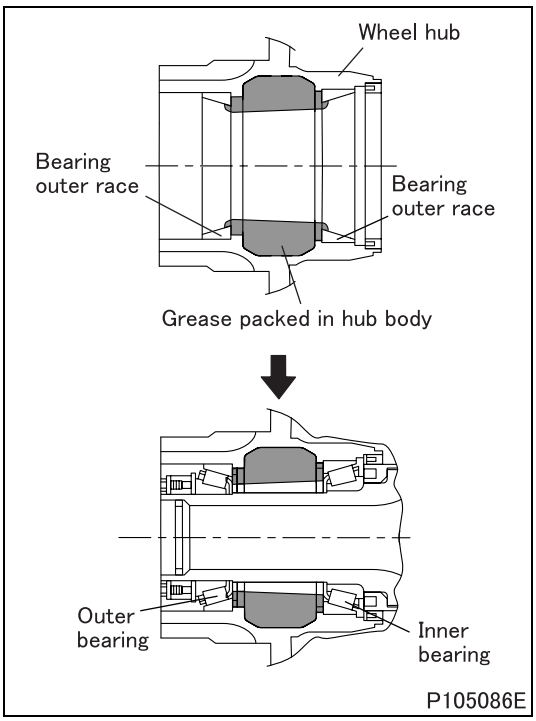

■ **Installation: Packing grease in wheel hub**

CAUTION ⚠

- **Wheel bearing seized may be caused unless following these manners.**
- **Pack the specific amount of grease measured by measurement cup or etc.**

- Pack grease in the wheel hub body so much that grease covers the outer and inner bearing outer races to ensure that grease will reach the outer and inner bearings as shown in the drawing.

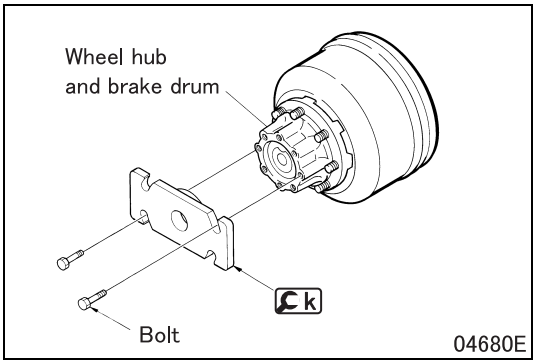

■ **Installation: Wheel hub and brake drum**

- Using two bolts, mount Ⓚ on wheel hub and brake drum. <FM>

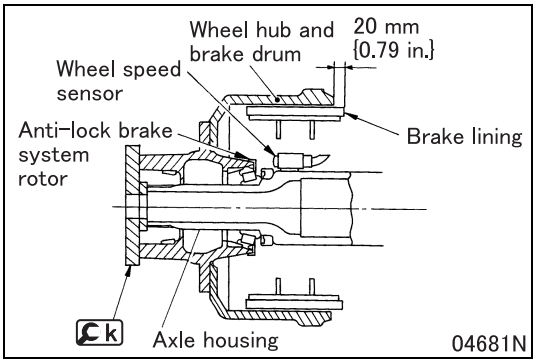

- Mount wheel hub and brake drum on axle housing and press unitil Ⓚ contacts the end surface of the axle housing. <FM>
- Remove Ⓚ, and mount outer bearing inner race, lock washer and lock nut. Tighten the lock nut slowly. <FM>

CAUTION ⚠

- **When installing wheel hub and brake drum without using Ⓚ, mount the assembly without jiggling until brake lining extends approximately 20 mm {0.79 in.} from the edge of brake drum. Then, tighten lock nut slowly.**

- With the wheel hub and brake drum installed, adjust the brake shoe clearance.

■ **Installation: Packing grease in outer bearing inner race**

- Follow the same procedure as for packing the inner bearing inner race with grease.
  (See "■ **Installation: Packing grease in inner bearing inner race**".)

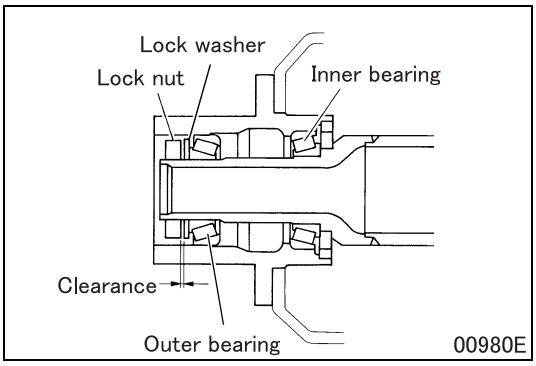

■ **Adjustment: Wheel hub bearing starting torque**

[Adjustment]

- Install the lock washer and lock nut.
- Rotate the wheel hub and brake drum at least three turns to let the outer and inner bearings settle in and check that there is no drag between brake lining and drum.
- Tighten the lock nut to the specified torque using Ⓐ.
- Loosen the lock nut until there is clearance between the lock nut and lock washer.

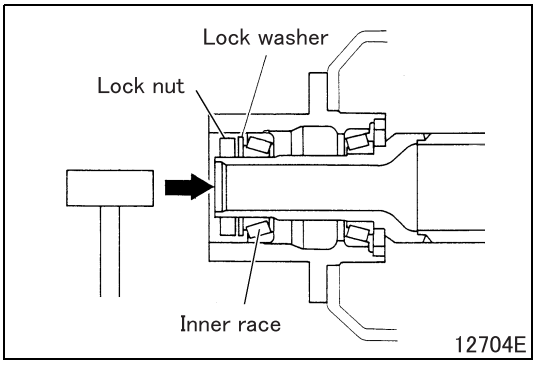

- Perform the following work to pull the outer bearing inner race toward the lock nut side.
- While rotating the wheel hub and brake drum, tap the end of the axle tube a couple of times.

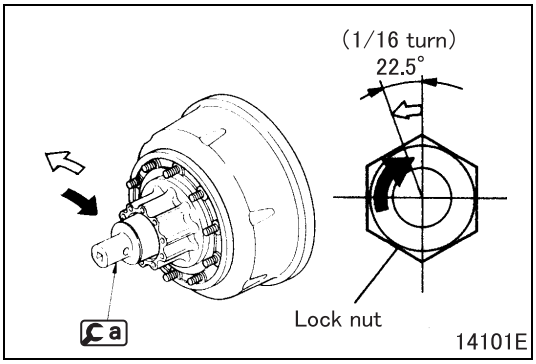

★• Tighten lock nut at specified torque using [a], and after it, return to the loosening direction as shown at the illustration by the amount of 22.5° (1/16 turn).
(★: If the result is not satisfactory by tangential measurement, which will be explained at a later section, repeat the operation from here.)

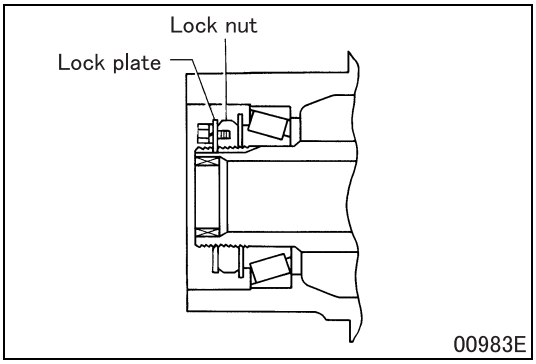

• Fit the lock plate into place and check to ensure that all of the mounting holes in the lock nut and the lock plate are in alignment, and tighten mounting bolts to the specified torque.

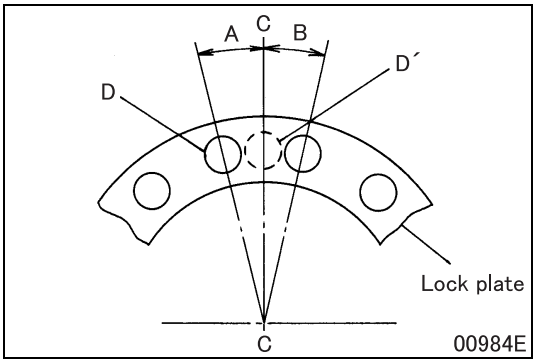

• If the mounting holes of lock nut and lock plate are out of alignment, align them by the procedures shown in the following table.

Lock nut hole position	How to align lock plate hole
Range A	Loosen lock nut and align holes.
Range B	Turn over lock plate, loosen lock nut and align holes.
On line C-C	Turn over lock plate and align holes. (Hole position changes from D´ to D.)

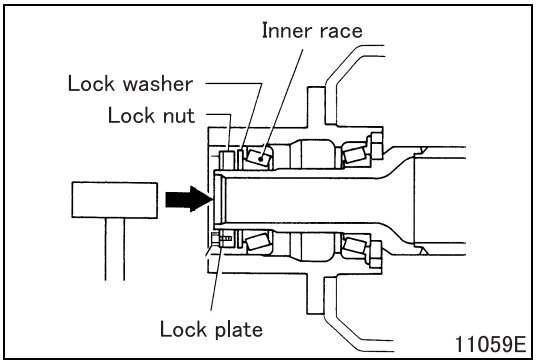

• Perform the following work to pull the outer bearing inner race toward the lock nut side again.
• While rotating the wheel hub and brake drum, tap the end of the axle tube a couple of times.

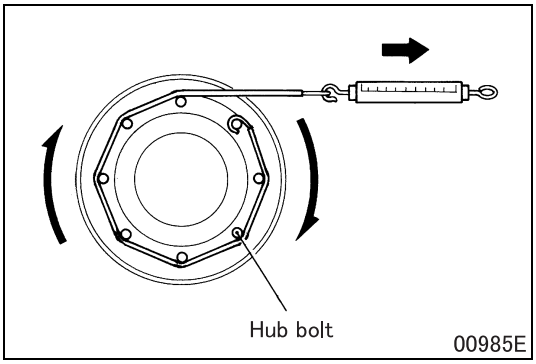

[Inspection]

- After adjustment, install a spring balance around the hub bolts to measure the tangential force.
- If the tangential force meets the specified value, starting torque will become the standard value.
- If the measured tangential force does not meet the standard value, re-adjust the starting torque.
- If tangential force deviates from the nominal value, repeat the operation from the item ★ after.
- If then the result is not satisfactory, replace outer bearings and inner bearings.

NOTE

- **The starting torque must be measured with installing the oil seal and applying grease on the lip area.**
- **When taking measurements, ensure that there is no drag between the brake lining and drum.**

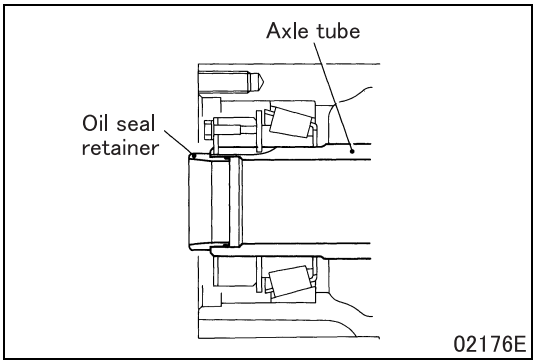

■ Installation: Oil seal retainer <FK>

- Insert the oil seal retainer until it is against the end of the axle tube.

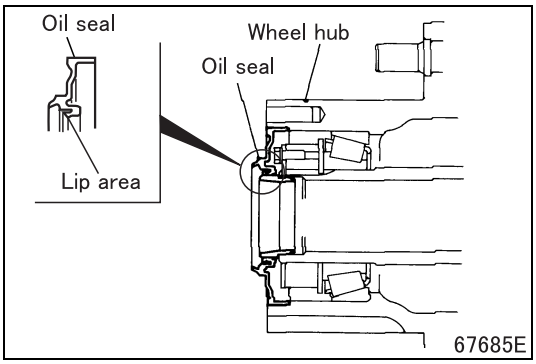

■ Installation: Oil seal <FK>

- Apply grease to the lip area of the oil seal and install the oil seal evenly along its periphery against the end of the wheel hub.

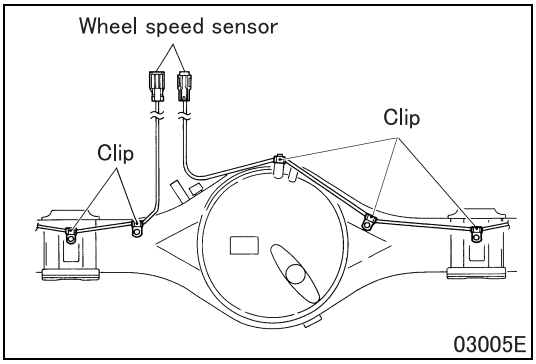

■ Installation: Wheel speed sensor harnesses

[Clipping harnesses along axle housing]

- Clip the harnesses onto the axle housing, starting from the wheel brakes and along the housing. Ensure that the harnesses are free from interference with other parts, looseness, or kinks.

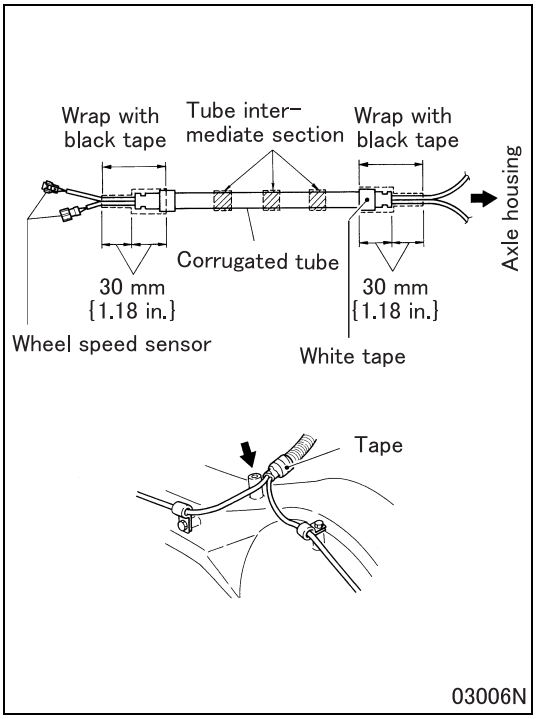

[Bundling harnesses]

- Bundle the harnesses of the left- and right-hand wheel speed sensors into a corrugated tube.
- Arrange the corrugated tube such that the white-tape portions of the tube are aligned with the clips on the housing. With the tube correctly arranged, face the slit of the corrugated tube down, and wrap both ends of the tube with black tape (designed for harness bundling) in a half lap pattern.
- Additionally wrap the tube with tape at three locations in the tube intermediate section.

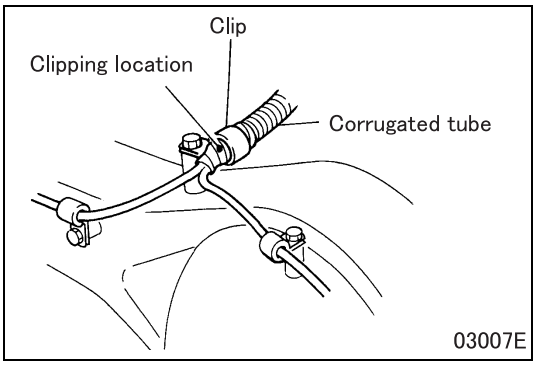

[Fixing harnesses in place]

- Clip the corrugated tube onto the axle housing as shown in the illustration. Also, fix the corrugated tube along the frame using clips.

M E M O

AXLE HOUSING

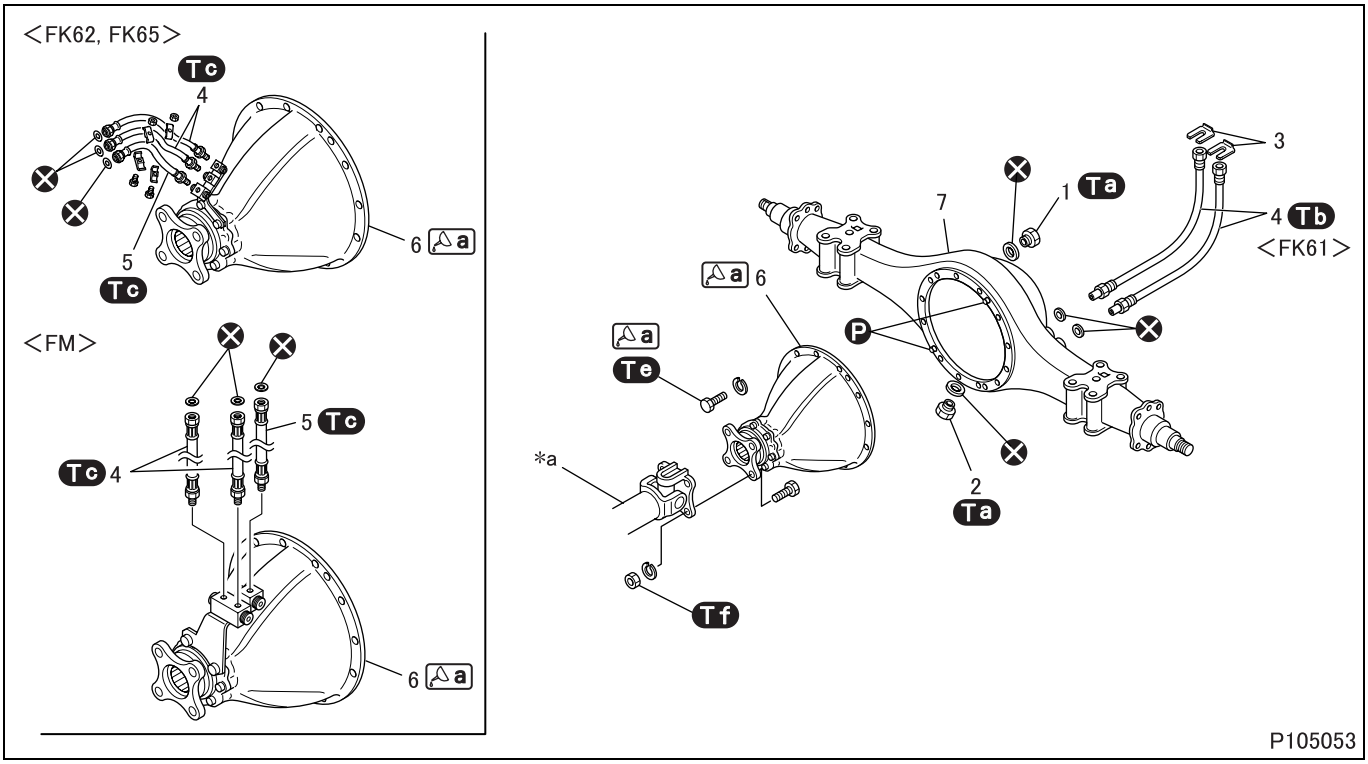

● **Disassembly sequence**

1 Inspection plug
2 Drain plug
3 Clip <FK61>
4 Brake hose
5 Spring brake hose <FK62, FK65, FM>
6 Reduction and differential (See later section.)
7 Axle housing

***a**: Propeller shaft
Ⓟ: Locating pin
⊗: Non-reusable parts

CAUTION ⚠

- **Plug the brake hoses that have been removed to prevent the ingress of dust and other contaminants.**
- **The suspension parts around the axle housing must be removed. (See Gr34.)**

NOTE

- **Do not remove the axle housing unless defects are evident.**

● **Assembly sequence**

Follow the disassembly sequence in reverse.

NOTE

- **Do not let sealant ooze from the mounting surfaces of reduction and differential.**

Service standards (Unit: mm {in.})

Location	Maintenance item	Standard value	Limit	Remedy
7	Bend of axle housing (B-A)	0.2 {0.0079} or less	2.5 {0.098} or more	Replace

Tightening torque (Unit: N·m {ft.lbs, kgf·m})

Mark	Parts to be tightened		Tightening torque	Remarks
Ta	Inspection plug		110 ± 10 {81 ± 7.4, 11 ± 1}	–
	Drain plug			
Tb	Installation of brake hose (axle housing side)	FK61	21 to 30 {15 to 22, 2.1 to 3.1}	–
Tc	Installation of brake hose (frame side)	FK62, FK65, FM	41.7 ± 2.5 {31 ± 1.8, 4.3 ± 0.3}	–
Te	Bolt (reduction and differential mounting)		98 to 147 {72 to 110, 10 to 15}	–
Tf	Nut (propeller shaft mounting)	P8	70 to 100 {51 to 72, 7.0 to 10}	–
		P10	120 to 180 {87 to 130, 12 to 18}	–

Lubricant and/or sealant

Mark	Points of application	Specified lubricant and/or sealant	Quantity
a	Bolt thread	ThreeBond 1215	As required
	Connecting surfaces of reduction and differential assembly and axle housing		

Special tools (Unit: mm {in.})

Mark	Tool name and shape	Part No.	Application
a	Measuring bar 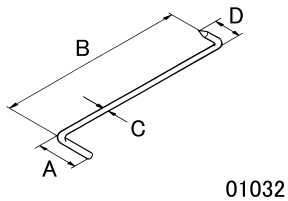 01032	MH061003	Measures bend of axle housing: Two required

A	B	C	D
30 {1.18}	130 {5.12}	ϕ3.5 {0.14}	20 {0.79}

◆Removal procedure◆

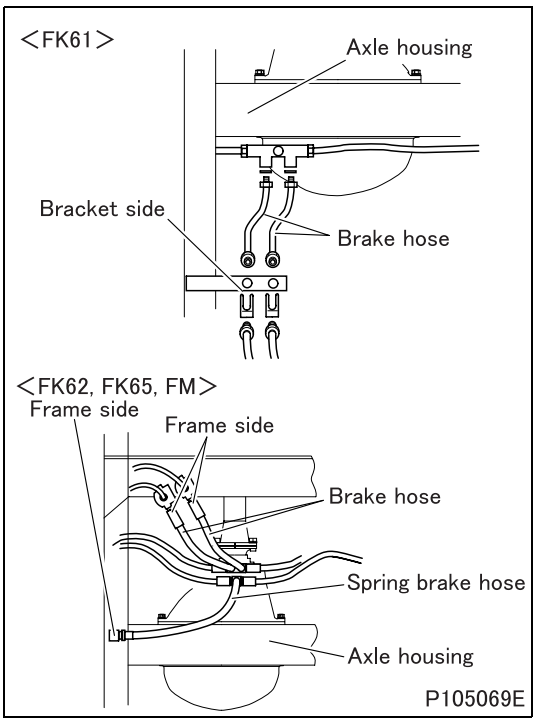

■ **Removal: Brake hoses**

- When removing the brake hoses, disconnect them from the bracket side (frame side) first, and then from the axle housing side.

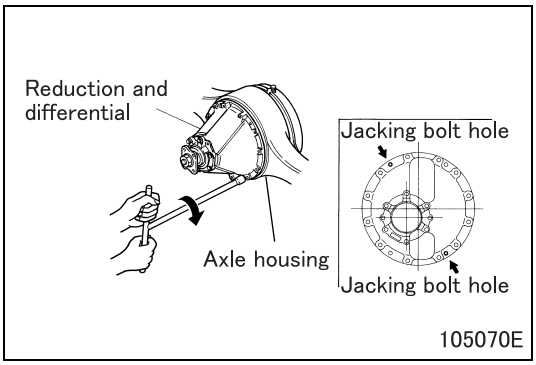

■ **Removal: Reduction and differential**

- Make two jacking bolts (M12 × 1.25 mm) available.
- Install and tighten the bolts evenly into the jacking holes in the reduction and differential.
- Jack away and remove the reduction and differential from the axle housing.

NOTE

- **Remove adhered sealant from the mounting surfaces of reduction differential assembly and axle housing.**

◆Inspection procedure◆

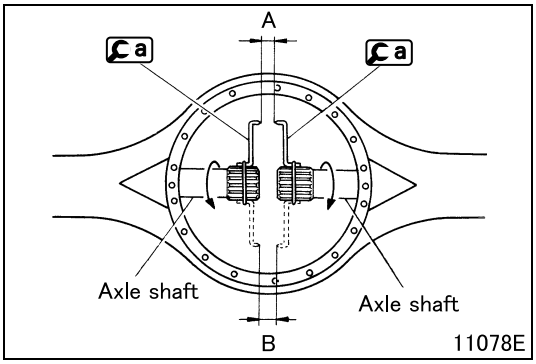

■ **Inspection: Bend of axle housing**

- Install axle shaft in axle housing.
- Install a on axle shaft.
- Measure clearance A.
- Turn axle shaft 180°.
- Measure clearance B.
- The difference between A and B is the amount of bend of axle housing.
- If the measurement exceeds the limit, replace the axle housing.

◆Installation procedure◆

■ Installation: Brake hoses, Air hoses

- Follows the removal procedure in reverse.
  (See "■ **Removal: Brake hoses**".)
- After installing, make sure that the brake hose does not interfere in the peripheral parts.

CAUTION ⚠

- **Make sure that the brake hose is not twisted when installing it.**

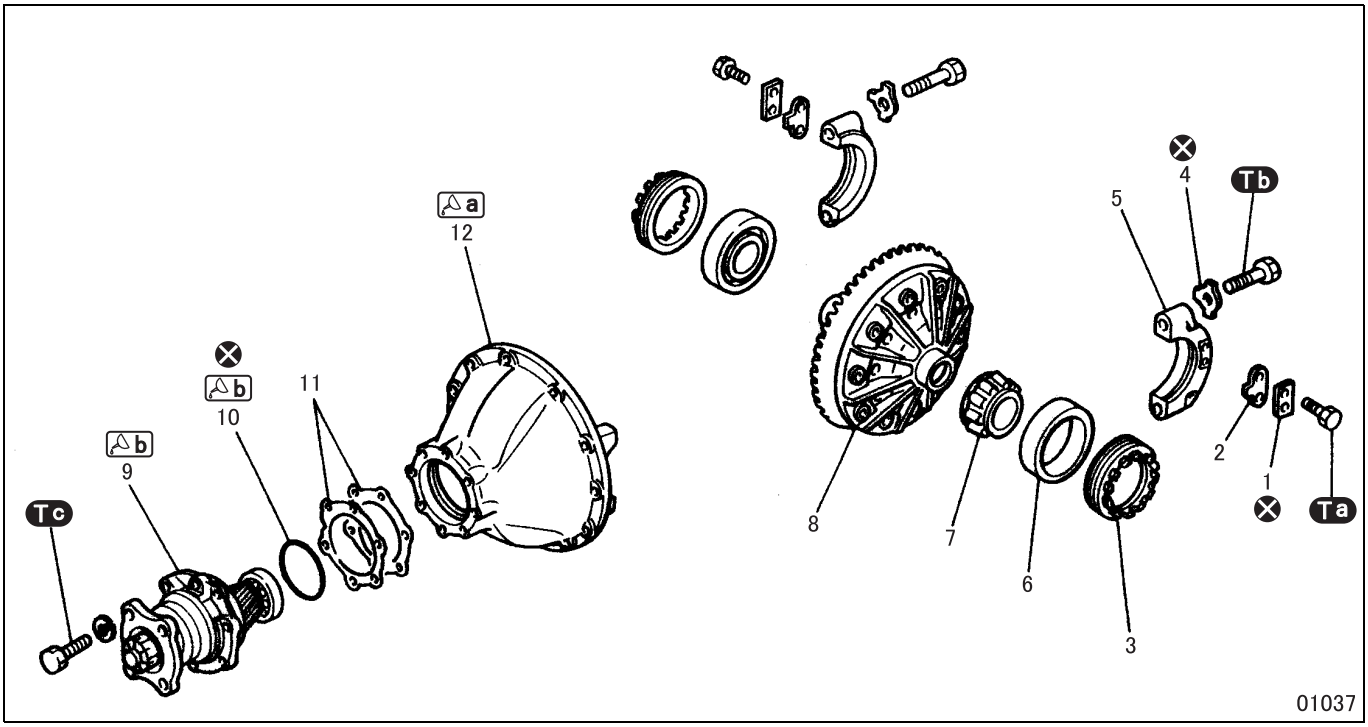

● **Disassembly sequence**

1 Lock sheet
2 Lock pawl
3 Adjusting screw
4 Lock plate
5 Bearing cap
6 Side bearing outer race
7 Side bearing inner race
8 Differential (See later section.)
9 Pinion (See later section.)
10 O-ring
11 Shim
12 Differential carrier

⊗: Non-reusable parts

CAUTION ⚠

- **Keep side bearings that have been removed separated from each other and ensure that during installation each one is correctly placed.**
- **Be sure to replace the bearing cap, differential carrier and bolts as a differential carrier set.**
- **Be sure to replace the reduction gear of the differential and reduction pinion of the pinion as a reduction gear set.**

NOTE

- **Record the number and thickness of shims to use them as reference at assembly.**

● **Assembly sequence**

Follow the disassembly sequence in reverse.

CAUTION ⚠

- **Be careful not to twist or damage the oil seal when installing it.**

Service standards (Unit: mm {in.})

Location	Maintenance item		Standard value	Limit	Remedy
6, 7	Starting torque of side bearing	D050H, D052H	2.0 to 2.9 N·m {1.4 to 2.2 ft.lbs, 0.2 to 0.3 kgf·m}	–	Adjust
		D8H	2.5 to 3.4 N·m {1.8 to 2.5 ft.lbs, 0.25 to 0.35 kgf·m}	–	Adjust
8	Wobble at back face of reduction gear		0 to 0.15 {0 to 0.0059}	0.2 {0.0079}	Adjust or replace
8, 9	Backlash between reduction gear and reduction pinion		0.25 to 0.33 {0.0098 to 0.013}	0.6 {0.024}	Adjust or replace

Tightening torque (Unit: N·m {ft.lbs, kgf·m})

Mark	Parts to be tightened		Tightening torque	Remarks
Ta	Bolt (lock pawl mounting)		27 to 41 {20 to 30, 2.8 to 4.2}	–
Tb	Bolt (bearing cap mounting)	D050H, D052H	235 {175, 24}	–
		D8H	379 to 513 {280 to 380, 38.7 to 52.3}	
Tc	Bolt (pinion mounting)	D050H, D052H	63 to 94 {46 to 69, 6.4 to 9.6}	–
		D8H	94 to 141 {69 to 105, 9.6 to 14.4}	

Lubricant and/or sealant

Mark	Points of application	Specified lubricant and/or sealant	Quantity
a	Pinion pilot bearing mounting surface of differential carrier	Loctite 601	As required
b	Differential carrier fitting surface of pinion	Gear oil [API GL-5, SAE 90]	As required
	O-ring		

Special tools (Unit: mm {in.})

Mark	Tool name and shape	Part No.	Application
a	Side bearing installer A: D050H, D052H: ϕ80 {3.15}; D8H: ϕ90 {3.74} B: D050H, D052H: ϕ70 {2.76}; D8H: ϕ85.5 {3.37} 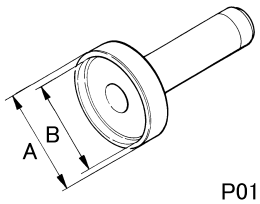 P01039	<D050H, D052H> MH061748 <D8H> 03723-25000	Installation of side bearing inner race
b	Bearing retainer guide pin 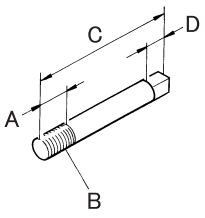 P01041 D050H, D052H: A 18 {0.71}; B M12 × 1.25; C 85 {3.35}; D 12 {0.47} D8H: A 95 {3.74}; B M14 × 1.5; C 95 {3.74}; D 12 {0.47}	<D050H, D052H> MH061745 <D8H> MH061746	Installation of pinion (two pieces are used)

Mark	Tool name and shape	Part No.	Application
C	Bearing retainer remover A: 68 {2.68} B: M14 × 1.5 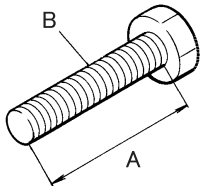 01040	<D8H> MH062172	Removal of pinion (two pieces are used)

◆Work before removal◆

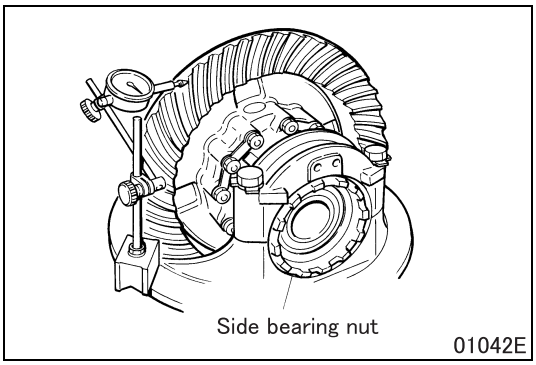

01042E

■ Inspection: Backlash between reduction gear and reduction pinion

- If backlash is found faulty, the amount of tightening of the side bearing nut is probably inappropriate.

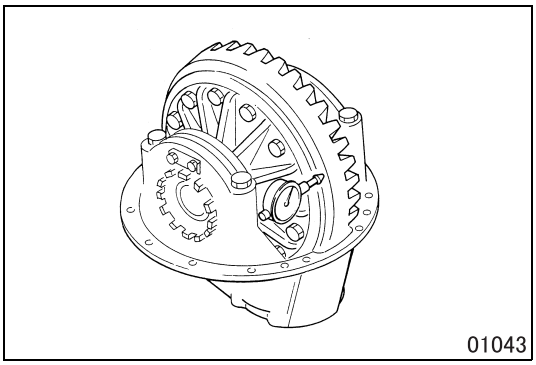
01043

■ Inspection: Wobble at back face of reduction gear

- Measure at R145 mm {5.71 in.} (on the radius) for <D050H, D052H>, 185 mm {7.28 in.} for <D8H>, from the center of the reduction gear.

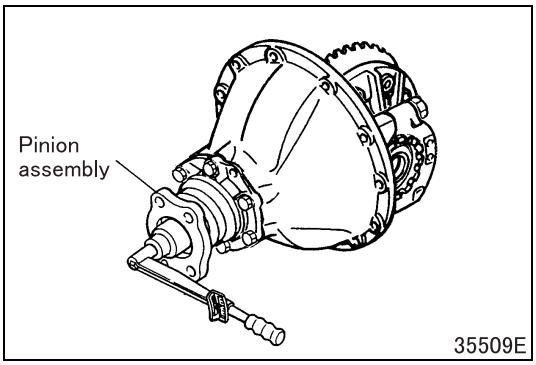

35509E

■ Inspection: Starting torque of side bearing

- Measure the starting torque of the pinion assembly using a torque wrench and calculate the starting torque of the side bearing using the following formula.
  (Total starting torque – Pinion bearing starting torque (See later section.)) × Final ratio = Side bearing starting torque

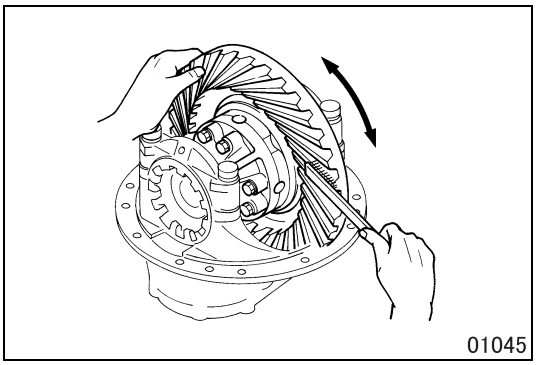
01045

■ Inspection: Tooth contact of reduction gear

- Apply red lead to three to four teeth at three equally spaced points on the reduction gear.
- Turn the reduction gear several times to check for tooth contact.

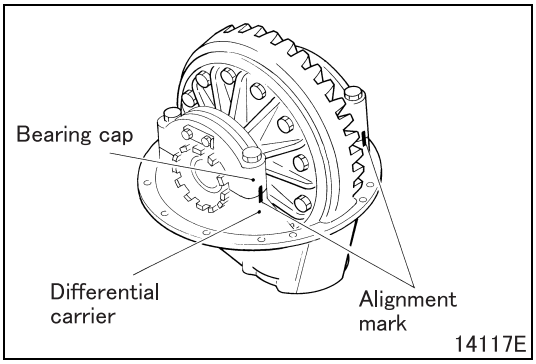

■ **Alignment marks: Bearing cap and differential carrier**

- Put alignment marks on the bearing cap and differential carrier for correct identification of right and left parts.

◆Removal procedure◆

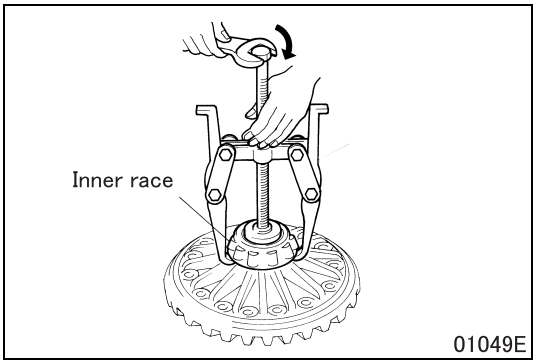

■ **Removal: Side bearing inner race**

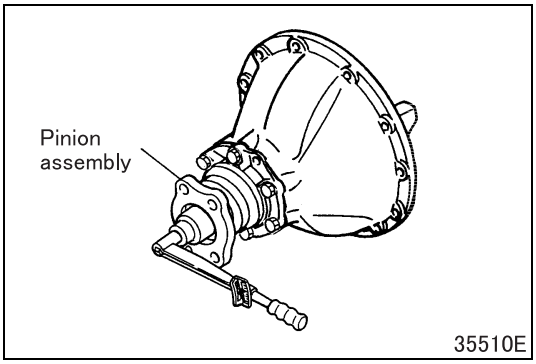

■ **Inspection: Starting torque of pinion bearing**

- With the differential removed, measure the starting torque of the pinion bearing using a torque wrench installed at the pinion. Refer to “Pinion” later in this manual for the standard value.

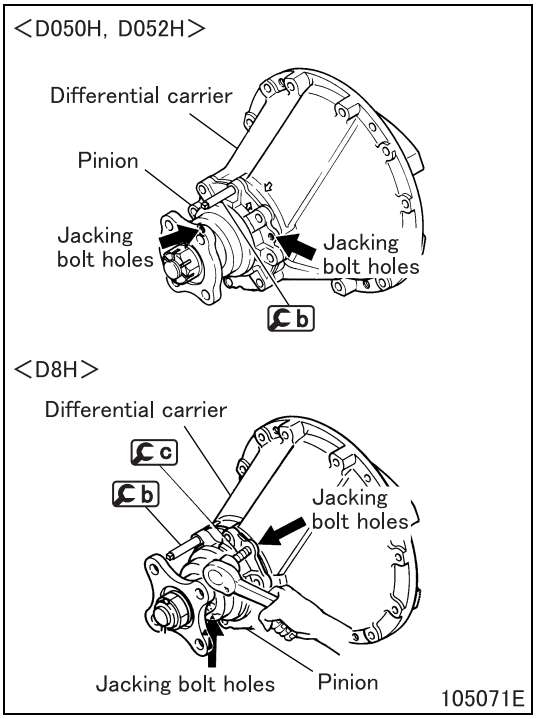

◆Installation procedure◆

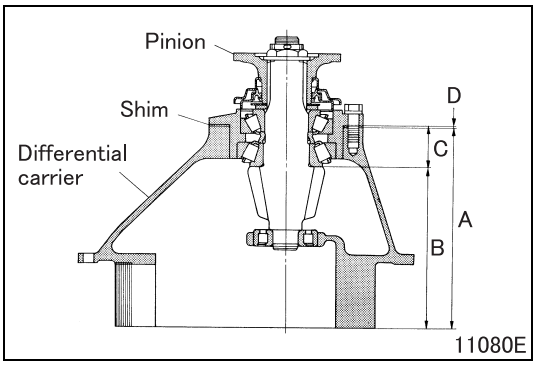

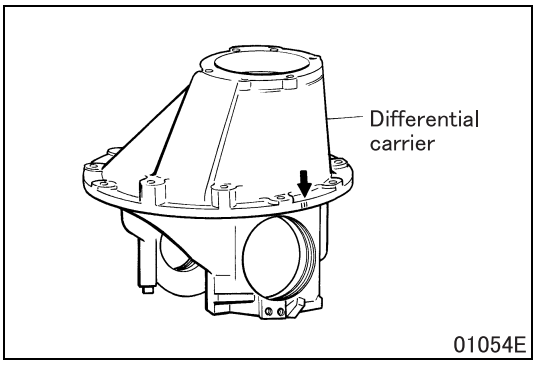

■ Removal: Pinion

- Make two jacking bolts (M12 × 1.25 mm) available. <D050H>
- Install two pieces of b diagonally.
- Make two jacking bolts (M14 × 1.5 mm) available or c. <D8H>
- Install and tighten the bolts or c evenly into the jacking holes in the pinion.
- Jack away and remove the pinion from the differential carrier.

■ Adjustment: Pinion

- Perform the following steps to adjust A, B and C within the specified dimensions.
- Calculate shim thickness D by using the following formula based on the machining error data stamped on pinion and differential carrier.
- Formula:
  D = 0.5 mm {0.020 in.} – a + b + c
  a = Deviation from standard dimension A
  b = Deviation from standard dimension B
  c = Deviation from standard dimension C

(Unit: mm {in.})

Location	Standard dimension		How to calculate deviation
	D050H, D052H	D8H	
Shim thickness	0.5 {0.020}		–
A	232 {9.13}	261 {10.3}	A numeral, multiplied by 100, is stamped on the outer periphery of the flange of the differential carrier.
B	180 {7.09}	208 {8.19}	A numeral is stamped on the top of the pinion assembly.
C	52 {2.05}	53.5 {2.11}	Measure deviation from dimension C using a dial gauge. Taking measurement is usually not feasible therefore assume the value is 0.2 mm {0.0079 in.}.

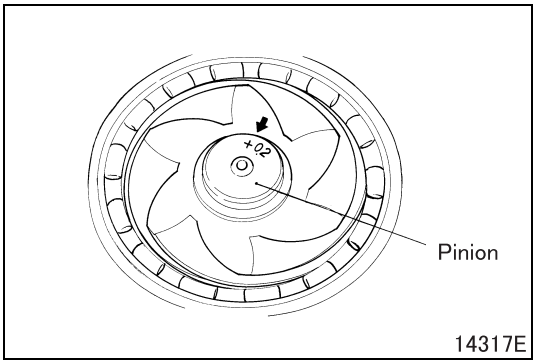

- Select a shim based on shim thickness D.
- Thickness of shims available: 0.1 mm {0.0039 in.}, 0.2 mm {0.0079 in.}

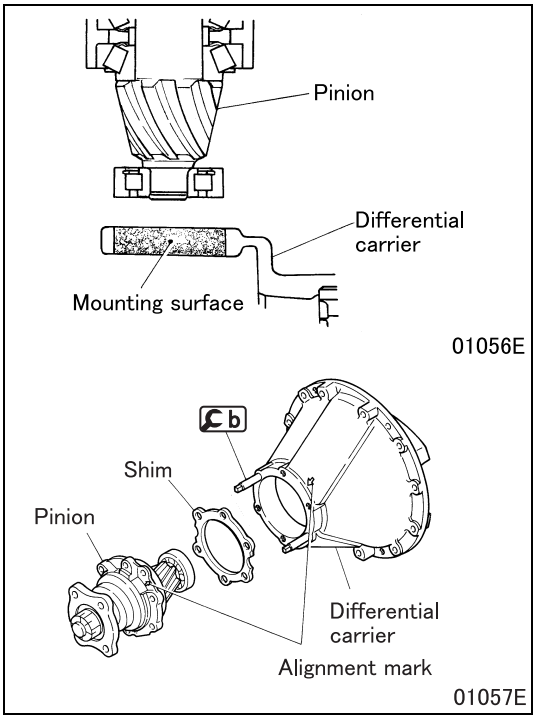

■ **Installation: Pinion**

- Apply sealant to the pilot bearing mounting surface of the differential carrier.
- Apply gear oil to the fitting area of the pinion and differential carrier.
- Aligning the embossed alignment mark on the bearing retainer of the pinion assembly with that on the differential carrier, mount the pinion assembly.

Bearing retainer	Differential carrier	
⇧ mark	▽ mark	D050H D052H
	⇩ mark	D8H

CAUTION ⚠

- **Leave for 30 minutes to 2 hours after installation to let the sealant harden.**
- **Wait at least three hours or, if feasible, 24 hours before running the vehicle to let the sealant harden.**

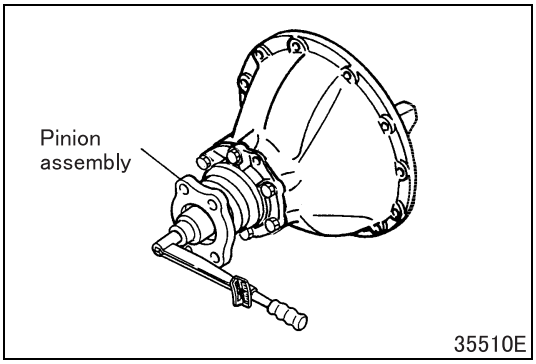

■ **Inspection: Starting torque of pinion bearing**

- With the pinion installed, measure the starting torque of the pinion bearing using a torque wrench installed at the pinion.
- Refer to “Pinion” later in this manual for the standard value.

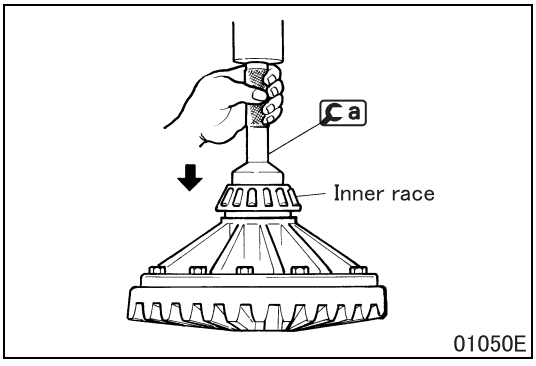

■ **Installation: Side bearing inner race**

◆Work after installation◆

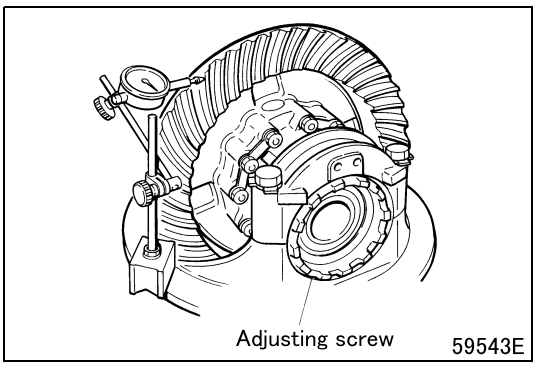

■ Adjustment: Backlash between reduction gear and reduction pinion

- Adjust by means of the right- and left-hand adjusting screws, taking care not to change the starting torque.

CAUTION ⚠

- **When one side bearing nut is loosened, be sure to tighten the other one by the same amount to prevent the side bearing starting torque from changing.**

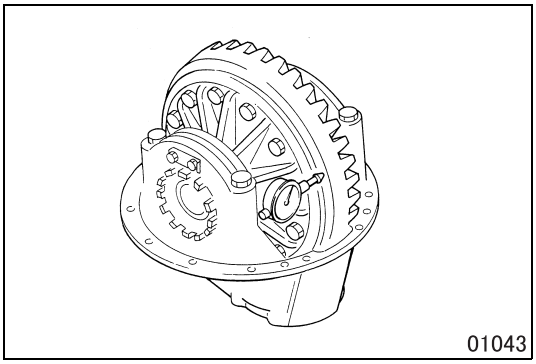

■ Inspection: Wobble at back face of reduction gear

- Measure at R145 mm {5.71 in.} <D050H, D052H> or R185 mm {7.28 in.} <D8H> from the center of the reduction gear.

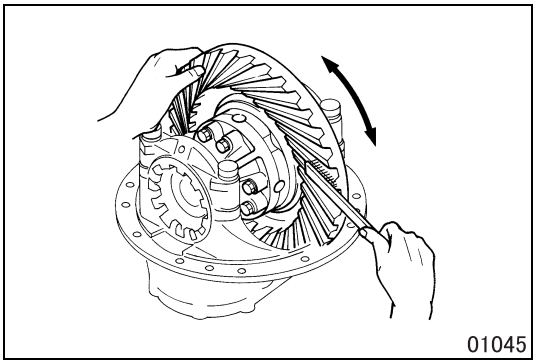

■ Inspection: Tooth contact of reduction gear

[Inspection]

- Apply red lead to three to four teeth at three equally spaced points of the reduction gear.
- Turn the reduction gear several times to check for tooth contact.
- Adjust tooth contact if it is remarkably offset.

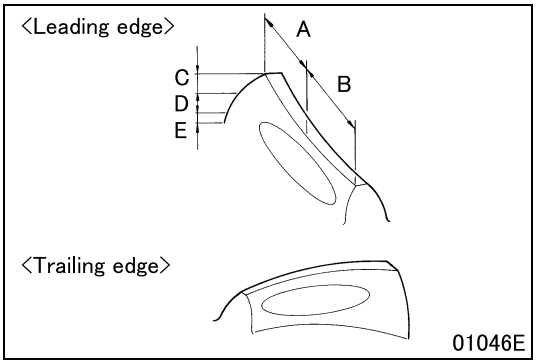

● Correct tooth contact at no load

<Reduction gear>

A: Heel
B: Toe
C: Face
D: Flank
E: Clearance

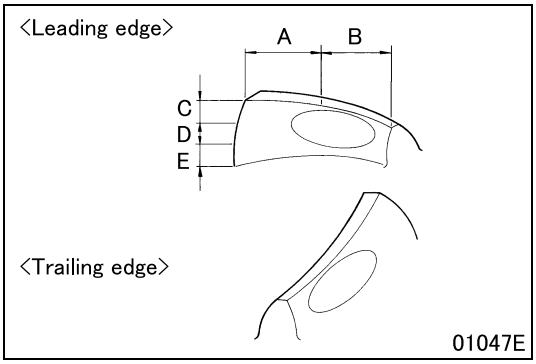

<Reduction pinion>

A: Heel
B: Toe
C: Face
D: Flank
E: Clearance

Maintenance item			Assembly standards
At no load	Tooth contact position	Lengthwise direction of tooth	Leading edge: From center towards toe
			Trailing edge: From center towards heel
		Vertical direction	Center
	Tooth contact shape	Length	Approximately 50 to 70% of tooth width
		Width	Approximately 50 to 70% of tooth depth
	Degree of tooth contact		It becomes weaker as it nears tooth root and tooth tip

NOTE

- **When tooth contact is near the toe at no load, it becomes middle area contact at load.**

[Adjustment]

- Adjust by means of shimming and increasing/decreasing the backlash between the reduction gear and reduction pinion.

CAUTION ⚠

- **When either the reduction gear or the reduction pinion needs to be replaced due to abnormal tooth wear, always replace both the reduction gear and the reduction pinion as a reduction gear set.**
- **If the backlash between the reduction gear and reduction pinion does not conform to the standard value but good tooth contact is maintained between them, the good tooth contact takes priority over the backlash. In other words, if good tooth contact is maintained, a backlash as small as 0.15 mm {0.0059 in.}, but no smaller than 0.15 mm {0.0059 in.}, is acceptable and does not need to be adjusted to the standard value.**

	Method of adjustment	Moving direction	
Tooth contact by addition or reduction of shims	Advance reduction pinion to reduction gear (shims are reduced) 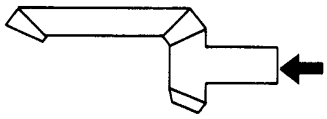 55497	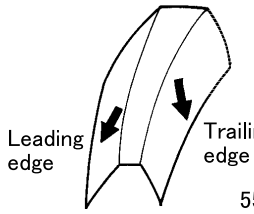 55501E	Tooth contact moves towards tooth root
	Retard reduction pinion from reduction gear (shims are added) 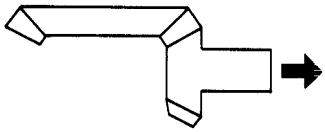 55498	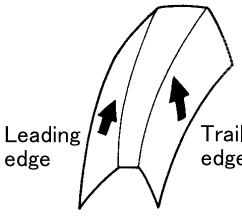 55502E	Tooth contact moves towards tooth tip
Tooth contact by adjustment with adjusting screw	Advance reduction gear to reduction pinion center (less backlash) 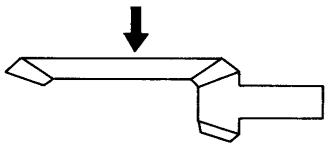 55499	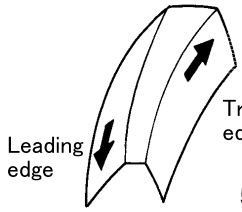 55503E	Tooth contact moves in lengthwise direction of tooth Leading edge: Nearer to toe and slightly nearer to root of tooth Trailing edge: Nearer to heel and slightly nearer to top of tooth
	Retard reduction gear from reduction pinion center (more backlash) 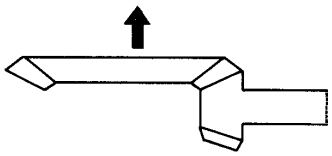 55500	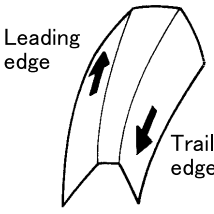 55504E	Tooth contact moves in lengthwise direction of tooth Leading edge: Nearer to heel and slightly nearer to top of tooth Trailing edge: Nearer to toe and slightly nearer to root of tooth

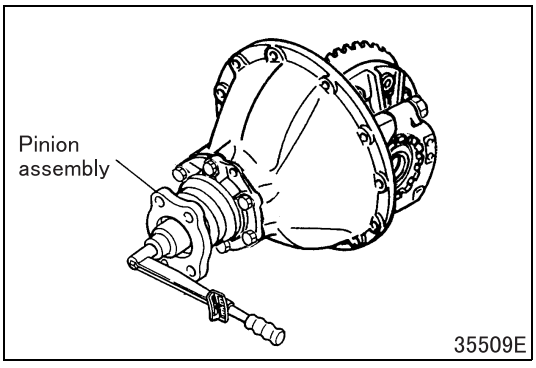

35509E

■ **Inspection: Starting torque of side bearing**

- After the inspection of tooth contact of reduction gear, carry out the following inspection.

[Inspection]

- Measure the starting torque of the pinion assembly using a torque wrench and calculate the starting torque of the side bearing using the following formula.
  (Total starting torque – Pinion bearing starting torque (See later section.)) × Final ratio = Side bearing starting torque
- If the calculated value does not meet the standard value, carry out the adjustment.

[Adjustment]

- Adjust by means of the right- and left-hand adjusting screws.

CAUTION ⚠

- **Always adjust both adjusting screws by the same amount.**
- **The starting torque must be adjusted without causing the backlash between the reduction gear and reduction pinion out of the standard value.**

Pinion

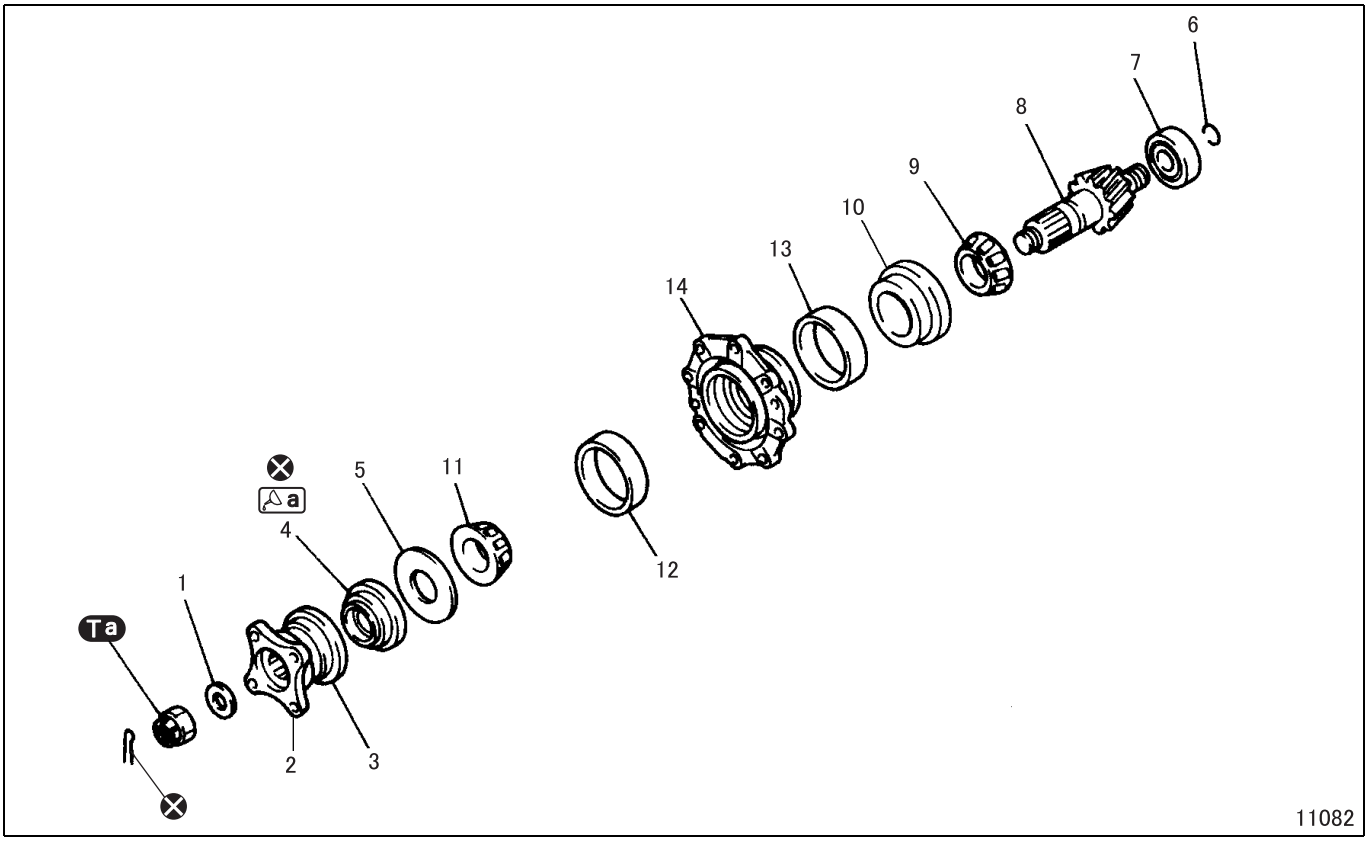

● **Disassembly sequence**

1 Washer <D8H>
2 Companion flange
3 Dust cover <D052H, D8H>
4 Oil seal
5 Oil separator <D8H>
6 Lock ring
7 Pinion pilot bearing
8 Reduction pinion
9 Inner bearing inner race
10 Collar
11 Outer bearing inner race
12 Outer bearing outer race
13 Inner bearing outer race
14 Bearing retainer

⊗: Non-reusable parts

NOTE

- **Record the height of the collar to use it as reference at assembly.**

● **Assembly sequence**

Follow the disassembly sequence in reverse.

Service standards (Unit: mm {in.})

Location	Maintenance item			Standard value	Limit	Remedy
–	Starting torque of pinion bearing	When new bearing is used	D050H, D052H	2.0 to 2.9 N·m {1.4 to 2.2 ft.lbs, 0.20 to 0.30 kgf·m} (tangential force: 24 to 34 N {5.3 to 7.7 lbs, 2.4 to 3.5 kgf})	–	Adjust or replace
			D8H	2.5 to 3.4 N·m {1.8 to 2.5 ft.lbs, 0.25 to 0.35 kgf·m} (tangential force: 30 to 43 N {6.8 to 9.7 lbs, 3.1 to 4.4 kgf})		
		When old bearing is re-used	D050H, D052H	1.6 to 2.4 N·m {1.2 to 1.7 ft.lbs, 0.16 to 0.24 kgf·m} (tangential force: 19 to 28 N {4.2 to 6.4 lbs, 1.9 to 2.9 kgf})		
			D8H	2.0 to 2.7 N·m {1.4 to 2.0 ft.lbs, 0.20 to 0.28 kgf·m} (tangential force: 25 to 34 N {5.5 to 7.7 lbs, 2.5 to 3.5 kgf})		
7	Play in radial direction of pinion pilot bearing			–	0.2	Replace

Tightening torque (Unit: N·m {ft.lbs, kgf·m})

Mark	Parts to be tightened		Tightening torque	Remarks
Ta	Lock nut (companion flange mounting)	D050H, D052H	315 to 470 {230 to 345, 32.1 to 47.9}	–
		D8H	542 to 733 {400 to 540, 55 to 75}	–

Lubricant and/or sealant

Mark	Points of application	Specified lubricant and/or sealant	Quantity
a	Lip area of oil seal	Chassis grease [NLGI No.1 (Li soap)]	As required

Special tools (Unit: mm {in.})

Mark	Tool name and shape	Part No.	Application
a	Oil seal installer A: ϕ130 {5.12} B: ϕ100 {3.94} 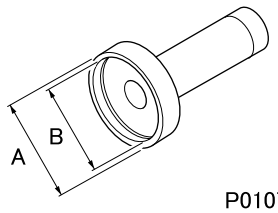 P01076	MH061752	Installation of oil seal
b	Pinion pilot bearing installer A: ϕ57.5 {2.26} B: ϕ51.5 {2.03} 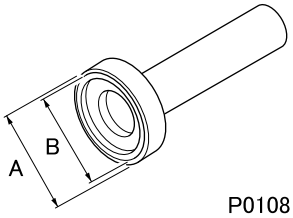 P01081	03723-27001	Installation of pinion pilot bearing

<table>
<tr><th>Mark</th><th>Tool name and shape</th><th>Part No.</th><th>Application</th></tr>
<tr><td>c</td><td>Pinion inner bearing installer
<table><tr><th></th><th>A</th><th>B</th><th>C</th></tr><tr><td>D050H, D052H</td><td>ϕ70 {2.76}</td><td>ϕ58 {2.28}</td><td>170 {6.69}</td></tr><tr><td>D8H</td><td>ϕ85 {3.35}</td><td>ϕ65 {2.56}</td><td>180 {7.09}</td></tr></table> 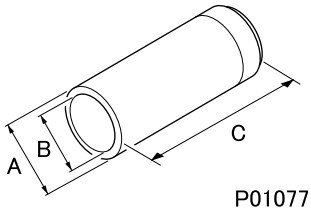
P01077</td><td><D050H, D052H>
MH061004
<D8H>
03724-51000</td><td>Installation of inner and outer bearing inner race</td></tr>
<tr><td>d</td><td>Pinion outer bearing installer
<table><tr><th></th><th>A</th><th>B</th></tr><tr><td>D050H, D052H</td><td>ϕ108 {4.25}</td><td>ϕ102.5 {4.04}</td></tr><tr><td>D8H</td><td>ϕ118 {4.65}</td><td>ϕ103 {4.06}</td></tr></table> 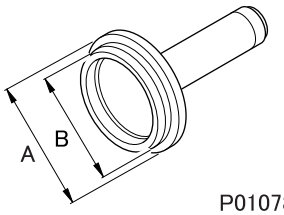
P01078</td><td><D050H, D052H>
MH061007
<D8H>
MH061006</td><td>Installation of outer bearing outer race</td></tr>
<tr><td>e</td><td>Pinion inner bearing installer
<table><tr><th></th><th>A</th><th>B</th></tr><tr><td>D050H</td><td>ϕ118 {4.65}</td><td>ϕ103 {4.06}</td></tr><tr><td>D8H, D052H</td><td>ϕ129 {5.08}</td><td>ϕ123 {4.84}</td></tr></table> 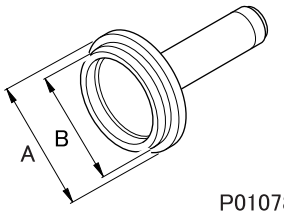
P01078</td><td><D050H>
MH061006
<D8H, D052H>
03724-55000</td><td>Installation of inner bearing outer race</td></tr>
</table>

◆Inspection before removal◆

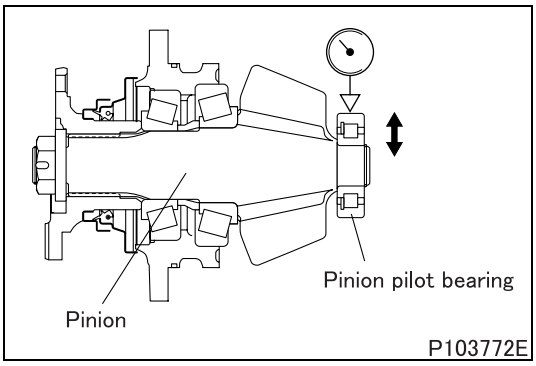

P103772E

■ Inspection: Play in radial direction of pinion bearing

- Hold the pinion and measure the play with moving the pinion pilot bearing in radial direction.
- If the measured value exceeds the limit, replace the pinion pilot bearing.

◆Removal procedure◆

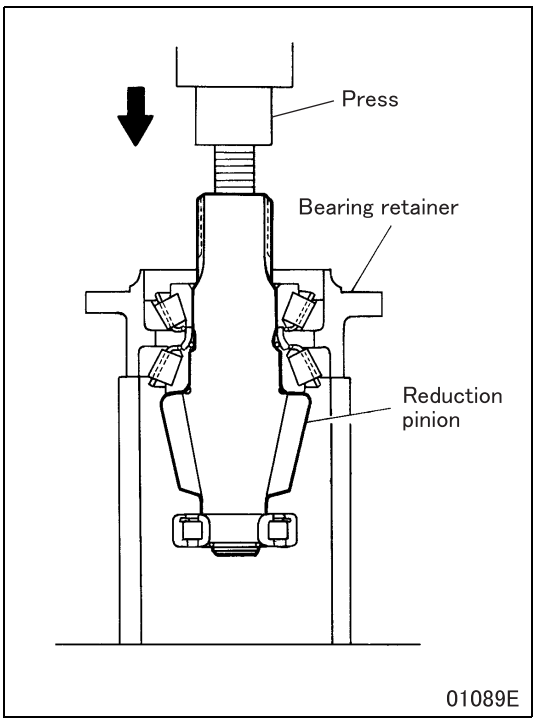

■ **Removal: Reduction pinion**

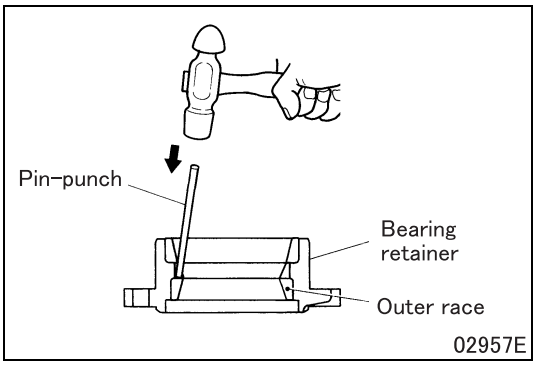

■ **Removal: Outer bearing outer race**

- Drive out the outer bearing outer race by tapping evenly at two notches in bearing retainer.

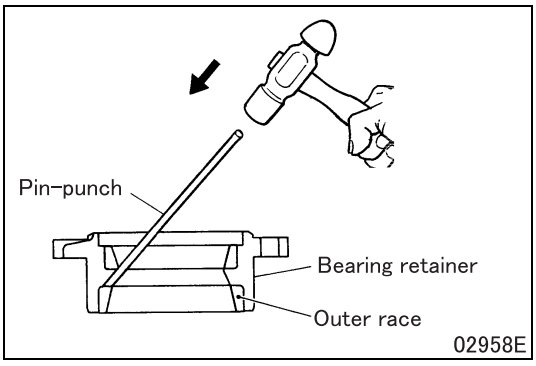

■ **Removal: Inner bearing outer race**

- Drive out the inner bearing outer race by tapping evenly at two notches in bearing retainer.

◆Installation procedure◆

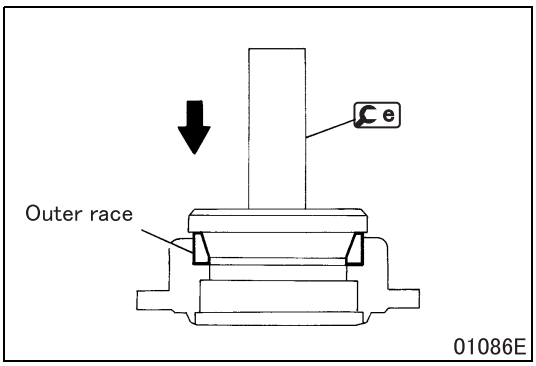

■ Installation: Inner bearing outer race

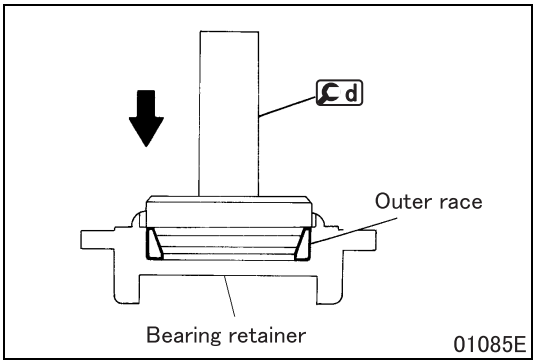

■ Installation: Outer bearing outer race

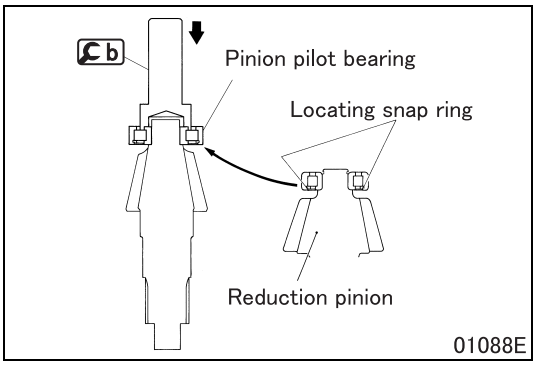

■ Installation: Pinion pilot bearing

- Install the pinion pilot bearing in the illustrated direction.
- After installing it, fit the lock ring.

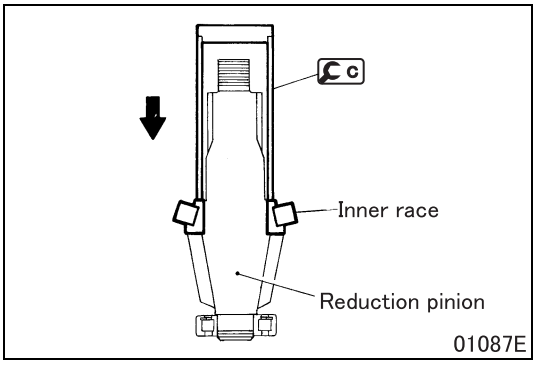

■ Installation: Inner bearing inner race

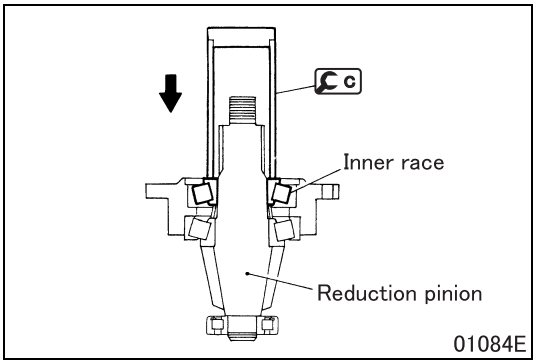

■ **Installation: Outer bearing inner race**

- Install the outer bearing inner race with the pinion assembled into the bearing retainer.

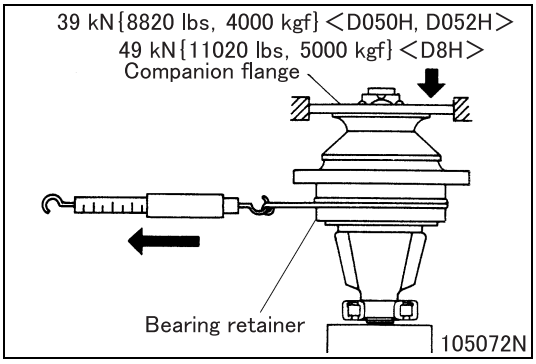

■ **Inspection: Starting torque of pinion bearing**

[Inspection]

- Apply the specified load to the companion flange or tighten the lock nut to the specified torque.
- Install a spring balance to the periphery of the bearing retainer and measure the tangential force. Bearing retainer outer periphery: ϕ170 mm {6.69 in.} <D050H, D052H>, ϕ160 mm {6.30 in.} <D8H>
- If the tangential force meets the specified value, the starting torque will also meet the specified value.
- If the measurement deviates from the specified value, adjust the tangential force.

CAUTION ⚠

- **Securely fix the companion flange to measure.**
- **Do not assemble the oil seal when measuring the tangential force.**

[Adjustment]

- Select an appropriate collar from the table below to bring the tangential force to the standard value.

Model	Thickness of collar
D050H	13.875 to 14.475 mm {0.55 to 0.57 in.} (25 sizes in 0.025 mm {0.00098 in.} increments)
D052H	11.875 to 12.475 mm {0.47 to 0.49 in.} (25 sizes in 0.025 mm {0.00098 in.} increments)
D8H	14.975 to 15.575 mm {0.59 to 0.61 in.} (25 sizes in 0.025 mm {0.00098 in.} increments)

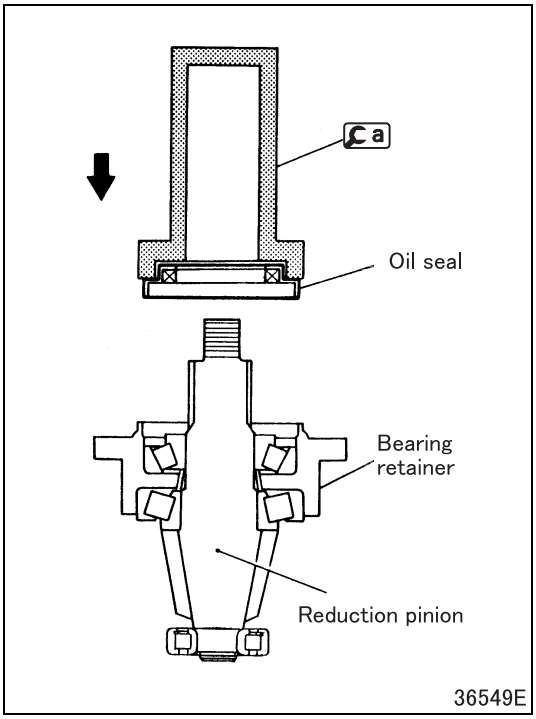

■ **Installation: Oil seal**

- Apply grease to the lip area of the oil seal and install it on the bearing retainer in the illustrated direction.

M E M O

Differential

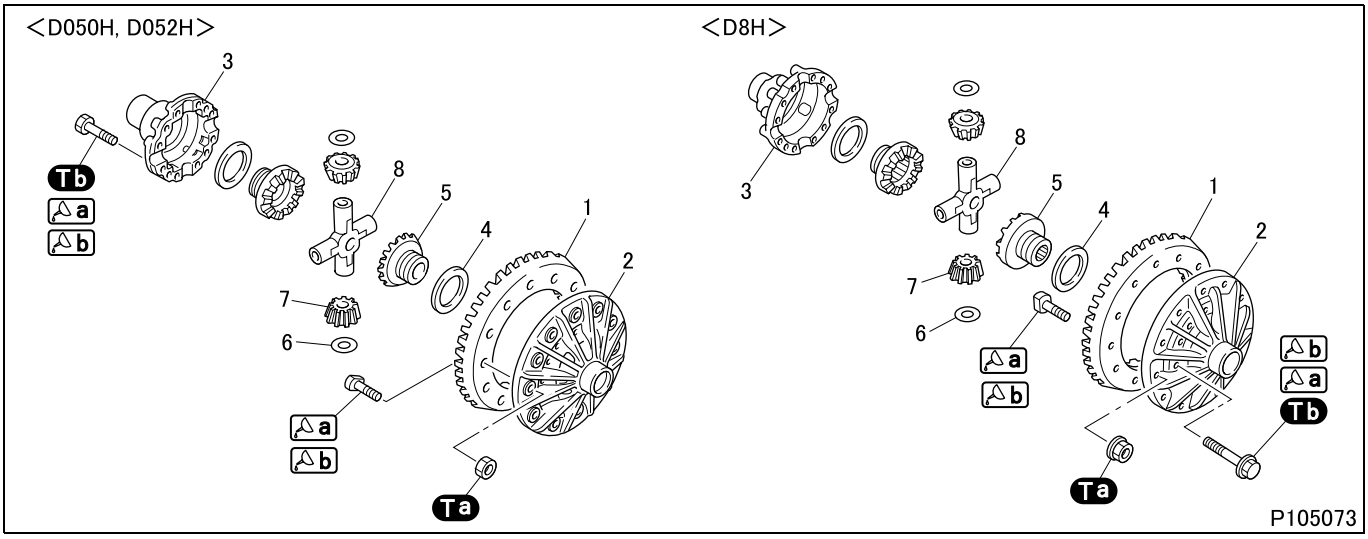

● **Disassembly sequence**

1 Reduction gear
2 Differential case
3 Differential case
4 Differential gear washer
5 Differential gear
6 Differential pinion washer
7 Differential pinion
8 Pinion spider

CAUTION ⚠

- **Be sure to replace the differential case as a differential case set.**

● **Assembly sequence**

Follow the disassembly sequence in reverse.

Service standards (Unit: mm {in.})

Location	Maintenance item		Standard value	Limit	Remedy
5	Backlash between differential gear and axle shaft spline	D050H, D052H	0.10 to 0.18 {0.0039 to 0.0071}	0.5 {0.020}	Replace
		D8H	0.07 to 0.22 {0.0028 to 0.0087}		
5, 7	Backlash between differential gear and differential pinion	D050H, D052H	0.19 to 0.25 {0.0075 to 0.0098}	0.5 {0.020}	Replace
		D8H	0.20 to 0.28 {0.0079 to 0.011}	0.8 {0.031}	
7, 8	Clearance between differential pinion and pinion spider	D050H, D052H	0.17 to 0.27 {0.0067 to 0.011}	0.5 {0.020}	Replace
		D8H	0.17 to 0.28 {0.0067 to 0.011}		

Tightening torque (Unit: N·m {ft.lbs, kgf·m})

Mark	Parts to be tightened		Tightening torque	Remarks
Ta	Nut (reduction gear and differential case mounting)	D050H, D052H	294 {215, 30}	–
		D8H	559 to 617 {410 to 455, 57 to 63}	
Tb	Bolt (differential case mounting)	D050H, D052H	181 {135, 18.5}	–
		D8H	167 to 225 {125 to 165, 17 to 23}	

Lubricant and/or sealant

Mark	Points of application	Specified lubricant and/or sealant	Quantity
a	Entire bolt	Rust preventive	As required
b	Thread area of bolt	Loctite 271	As required

◆Inspection procedure◆

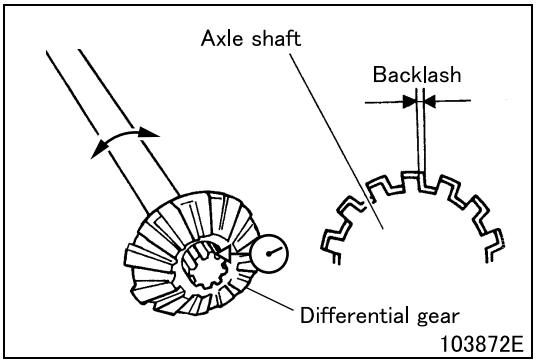

■ **Inspection: Backlash between differential gear and axle shaft splines**

- If the measurement is equal to or exceeds the limit, replace the defective part(s).

◆Installation procedure◆

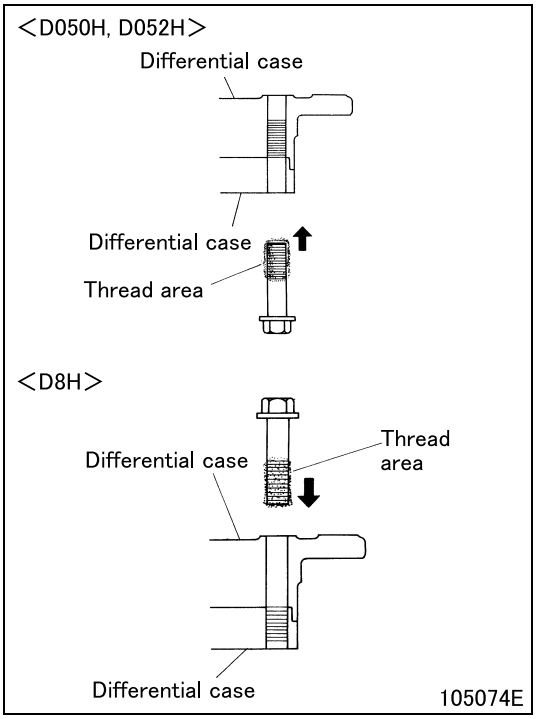

■ **Installation: Differential cases**

- Apply rust preventive over the entire bolt surface. After applying it, blow off the excess rust preventive on the bolt using compressed air.
- Apply thread lock cement to the bolt threads.
- Tighten the bolt to the specified torque.

CAUTION ⚠

- **The bolts must be coated with rust preventive before they are tightened to the specified torque.**
- **Do not drive the vehicle for at least an hour after the bolts have been tightened to let the thread lock cement harden.**
- **Do not drive the vehicle at full torque for at least four hours after the bolts have been tightened to let the thread lock cement harden.**

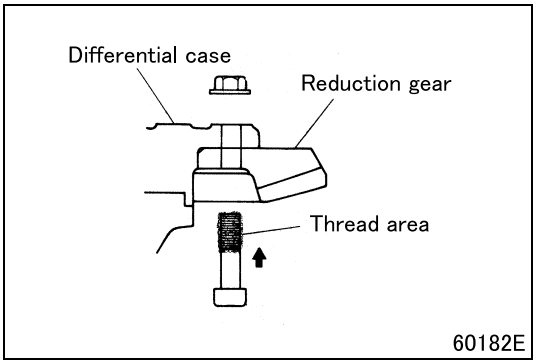

■ **Installation: Differential case and reduction gear**

- Apply rust preventive over the entire bolt surface. After applying it, blow off the excess rust preventive on the bolt using compressed air.
- Apply thread lock cement to the bolt threads.
- Tighten the bolt to the specified torque.

CAUTION ⚠

- **The bolts must be coated with rust preventive before the nuts are tightened to the specified torque.**
- **Do not drive the vehicle for at least an hour after the bolts have been tightened to let the thread lock cement harden.**
- **Do not drive the vehicle at full torque for at least four hours after the bolts have been tightened to let the thread lock cement harden.**

◆Adjustment after installation◆

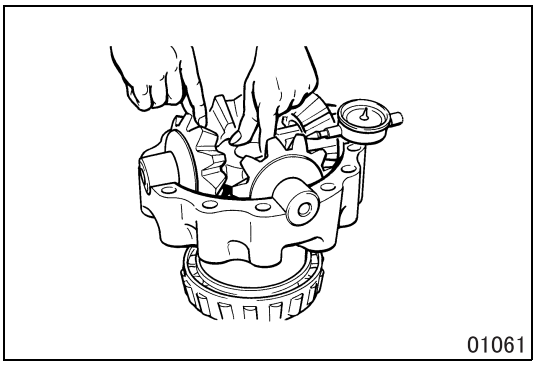

■ **Adjustment: Backlash between differential gear and differential pinion**

- If the measurement is equal to or exceeds the limit, replace the differential gear washers.

Group 31

Wheel and Tire

Table of Contents

Back

Home

MITSUBISHI FUSO TRUCK OF AMERICA, Inc.

Pub.No.TWME0709-31

INDEX

SPECIFICATIONS 31-2

TROUBLESHOOTING 31-3

ON-VEHICLE INSPECTION AND ADJUSTMENT

1. Inspection of Wheel Nut, Hub Bolt and Disc Wheel 31-4

WHEEL AND TIRE 31-6

SPECIFICATIONS

Tire size	Wheel type
225/70R19.5	19.5 × 6.75-136-12
10R22.5-14PR	22.5 × 7.50-162-13
11R22.5-14PR	

- Tire pressures specified for each tire size are shown on the tire pressure label.

Symptoms / Possible causes			Tire tread wear										Reference Gr
			Both shoulders worn	Center worn	Outside worn	Inside worn	Worn in feather pattern from outside in	Worn in feather pattern from inside out	Worn in wave pattern	Worn in concave (one spot or more)	Worn in pit over the entire periphery	Worn in serration	
Overload			O										
Tire pressure		Too low	O						O	O	O	O	
		Too high		O									
Wheel alignment	Toe-in	Excessive			O		O						Gr26
		Insufficient				O							
	Camber	Excessive			O								
		Insufficient				O							
	Excessive toe-out					O		O					
	Multiple misalignment		O		O	O	O	O	O	O	O		
Knuckle arm bent					O	O	O	O					
Left and right tie-rods different in length							O						
Wheels out of balance									O	O	O	O	
Wheel bearing loose									O	O	O	O	Gr26, 27
Ball joint loose										O			Gr26
Tie-rod end loose										O			Gr26
Brake drum eccentric worn										O	O		Gr26, 27
Axle bent									O	O			Gr26, 27
Left and right wheels steered at improper angles												O	Gr26
Hard acceleration, braking, or steering										O	O		
Specific road surface conditions					O	O							

ON-VEHICLE INSPECTION AND ADJUSTMENT

1. Inspection of Wheel Nut, Hub Bolt and Disc Wheel

Tightening torque (Unit: N·m {ft.lbs, kgf·m})

Mark	Parts to be tightened		Tightening torque	Remarks
–	Wheel nut	8-stud type	540 to 590 {400 to 435, 55 to 60}	Wet
		6-stud type	370 to 410 {270 to 300, 38 to 42}	

Lubricant and/or sealant

Mark	Points of application	Specified lubricant and/or sealant	Quantity
–	Spherical surface of wheel nut (outer)	Chassis grease [NLGI No.1 (Li soap)] or Wheel bearing grease [NLGI No.2 (Li soap)] or Engine oil	As required
	Outer threads of wheel nut (inner)		

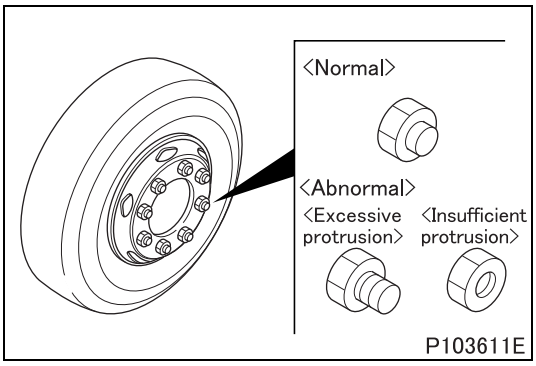

1.1 Visual inspection

- Check the end of each hub bolt for proper length of protrusion from the wheel nut. Excessive length of protrusion can lead to an elongated hub bolt and insufficient length can lead to a broken bolt. If any abnormality is found, replace all of the wheel nuts and hub bolts on the wheel. (See WHEEL AND TIRE, Gr26 and 27.)
- If there is any rust seepage from the wheel nuts, hub bolts, or disc wheel, check them for crack or other damage which may cause the rust. (See WHEEL AND TIRE.)

1.2 Inspection of loose nuts

(1) Single tire

- Tighten the wheel nuts to the specified torque using a torque wrench.
- If frequent loosening of tightened wheel nut or other similar abnormality is found, check the wheel nuts, hub bolts, and disc wheel for crack or other damage which may cause the abnormal condition. (See WHEEL AND TIRE.)

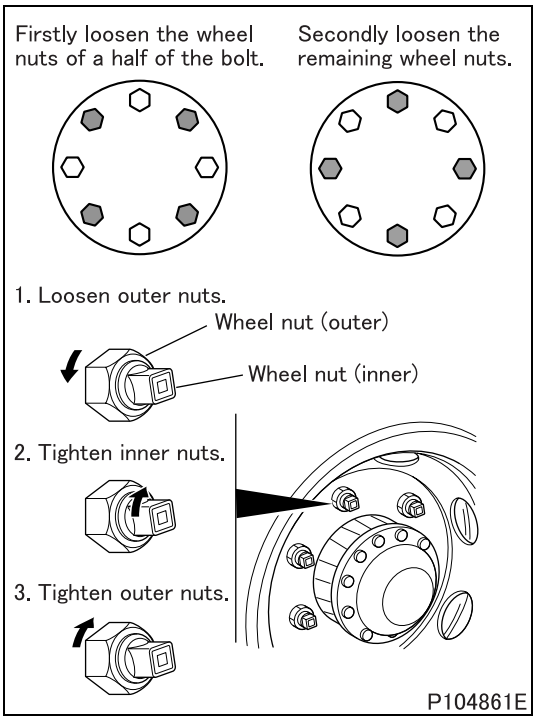

(2) Double tire

- Loosen outer wheel nuts of half of the wheel bolts (alternately) and then tighten the inner wheel nuts to the specified torque using a torque wrench. Only the 8-stud type wheel is shown in the drawing.
- Apply grease or engine oil to the spherical surface of the loosened outer wheel nuts and the outer threads of the inner wheel nuts.

CAUTION ⚠

- **Never use grease containing molybdenum disulfide. Greased wheel nuts can become loose.**

- Retighten the loosened outer wheel nut to the specified torque using a torque wrench.
- Follow the same procedure for the remaining outer wheel nuts and inner wheel nuts of half of the wheel bolts.
- If frequent loosening of tightened wheel nut or other similar abnormality is found, check the wheel nuts, hub bolts, and disc wheel for cracks or other damage which may cause the abnormal condition. (See WHEEL AND TIRE.)

M E M O

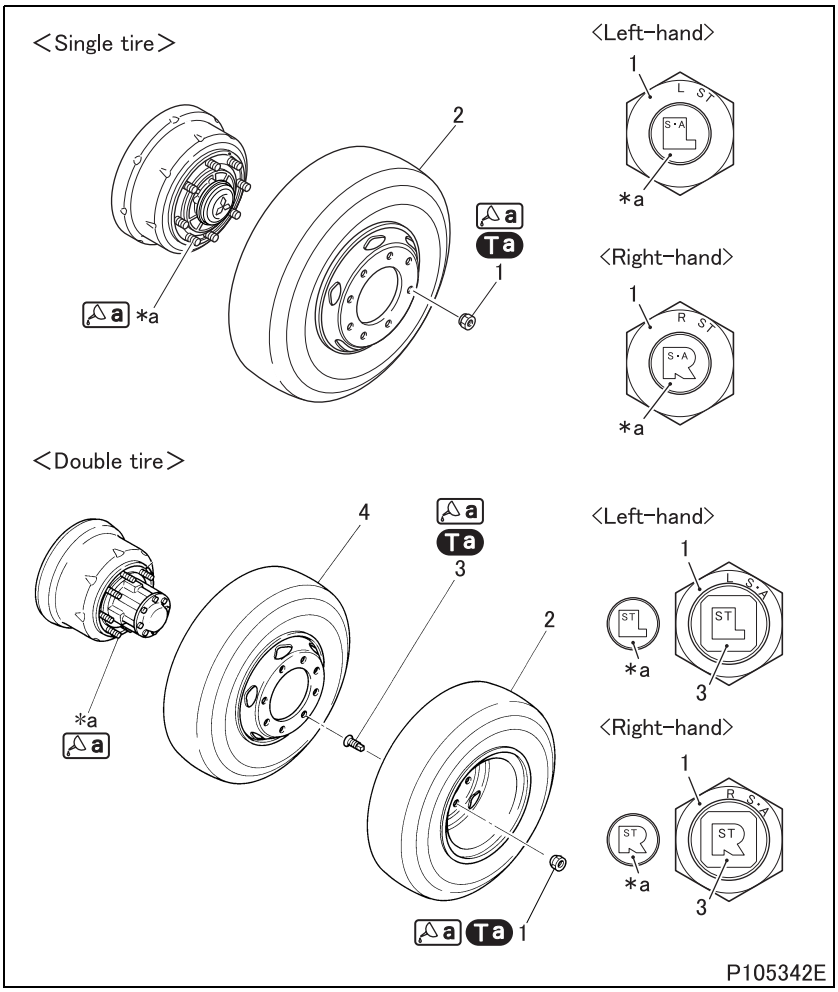

CAUTION ⚠

- **Use right-hand threaded wheel nuts marked "R" for right side wheels and left-hand threaded wheel nuts marked "L" for left side wheels.**

●Removal sequence

1 Wheel nut <Single tire>
Wheel nut (outer)
<Double tire>
2 Tire (See later section.)
3 Wheel nut (inner)
<Double tire>
4 Tire <Double tire>
(See later section.)

***a**: Hub bolt

●Installation sequence

Follow the removal sequence in reverse.

CAUTION ⚠

- **Never use grease containing molybdenum disulfide. Greased wheel nuts can become loose.**

Service standards (Unit: mm {in.})

Location	Maintenance item	Standard value	Limit	Remedy
3, 4	Tire lateral runout	3.5 {0.14} or less	–	Correct or replace

Tightening torque (Unit: N·m {ft.lbs, kgf·m})

Mark	Parts to be tightened		Tightening torque	Remarks
Ta	Wheel nut	8-stud type	540 to 590 {400 to 435, 55 to 60}	Wet
		6-stud type	370 to 410 {275 to 305, 38 to 42}	

Lubricant and/or sealant

Mark	Points of application	Specified lubricant and/or sealant	Quantity
a	Wheel nut spherical area	Chassis grease [NLGI No.1 (Li soap)] or Wheel bearing grease [NLGI No.2 (Li soap)] or Engine oil	As required
	Thread and spherical area of wheel nut (inner)		
	Thread area of hub bolt		

◆Inspection procedure◆

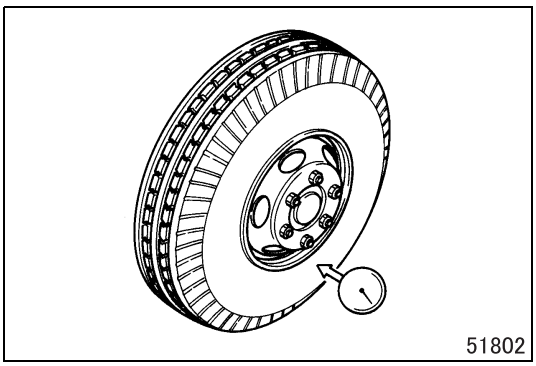

■ **Inspection: Tire lateral runout**

[Inspection]

- If the measured value deviates from the standard value, correct as follows.

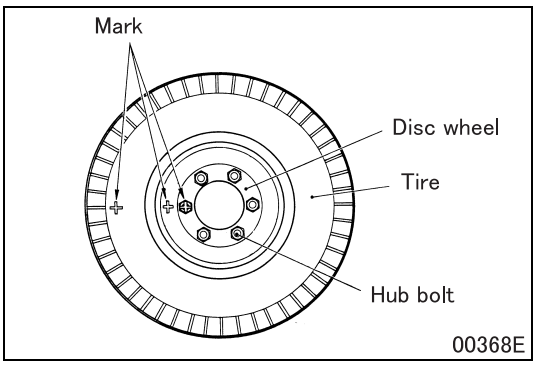

[Correction]

- Mark the tire, disc wheel, and one of the hub bolts in the illustrated locations.
- Remove the tire from the disc wheel.

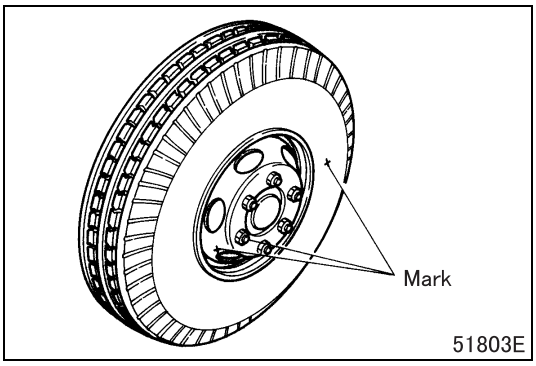

- Measure the disc wheel for lateral runout.
- If the disc wheel's maximum runout is located near the mark on the wheel, install the tire such that the mark on the tire is 180° away from the mark on the disc wheel.
- Measure the tire again for lateral runout.
- If the measured value still does not conform to the standard value, replace the tire.

◆Installation procedure◆

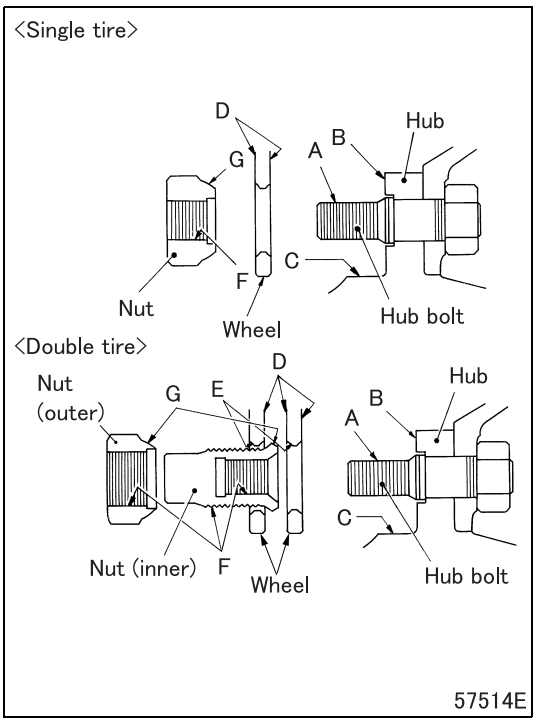

■ **Installation: Tire**

- To prevent hardware and parts from becoming loose and/or damaged, thoroughly clean the following areas, removing rust, dirt, paint and foreign matter, before installing the tire.
  - A: Threaded portion of hub bolt
  - B: Wheel mounting surface of hub
  - C: Wheel alignment area of hub
  - D: Mating surfaces of disc wheel
  - E: Wheel nut mounting surface of disc wheel
  - F: Threaded portion of wheel nut
  - G: Spherical portion of wheel nut

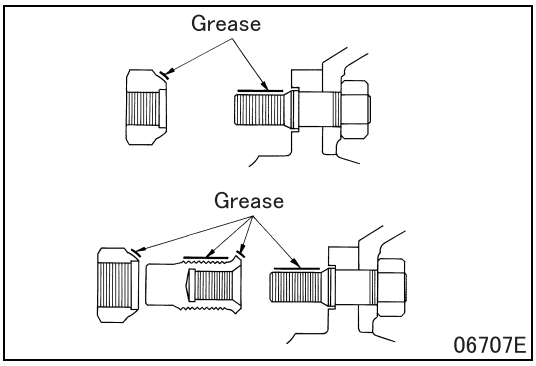

- Apply grease to the illustrated areas.

CAUTION ⚠

- **Never use grease containing molybdenum disulfide. Greased wheel nuts can become loose.**

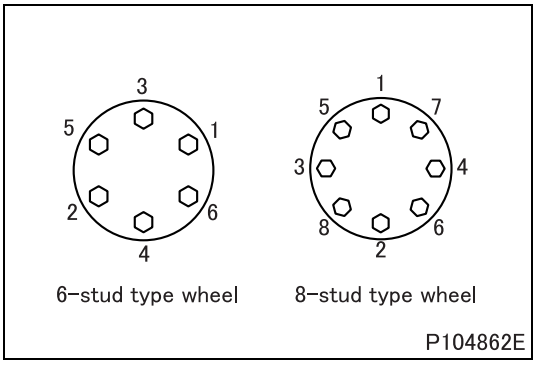

- Install the wheel nuts by tightening them with fingers as far as they go to ensure that they smoothly turn. If there is any abnormality such as a sticking point, replace the hub bolt. (See Gr26A, 26B, and 27.)
- The wheel nuts should be tightened in the diagonal sequence in a few steps. Lastly, use a torque wrench to retighten them to the specified torque.
- When tightening the nuts with an impact wrench, use care of the time of tightening, compressed air pressure intensity or the like to prevent overtightening and use a torque wrench to retighten them in the final step.

M E M O

Tire

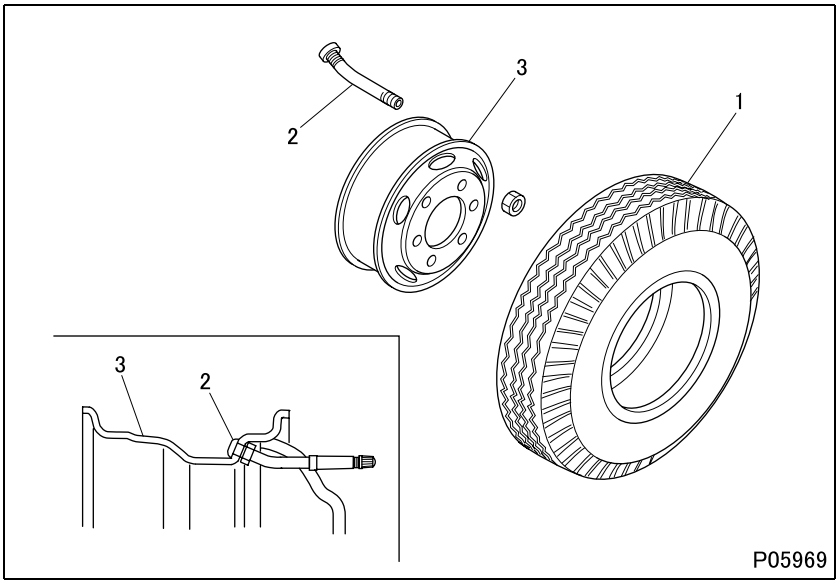

●Disassembly sequence

1 Tire
2 Air valve
3 Disc wheel

●Assembly sequence

Follow the disassembly sequence in reverse.

Service standards (Unit: mm {in.})

Location	Maintenance item			Standard value	Limit	Remedy
–	Static unbalance tolerance of wheel and tire			35 g {1.2 oz} or less	–	Correct
3	Disc wheel	19.5 × 6.75-136-12	Flatness	0.2 {0.0079} or less	–	Replace
			Lateral runout (sideway deflection)	2.0 {0.079} or less	–	
			Radial runout (vertical deflection)	1.8 {0.071} or less	–	
		22.5 × 7.50-162-13	Flatness	0.2 {0.0079} or less	–	
			Lateral runout (sideway deflection)	2.0 {0.079} or less	–	
			Radial runout (vertical deflection)	1.8 {0.071} or less	–	

◆Inspection procedure◆

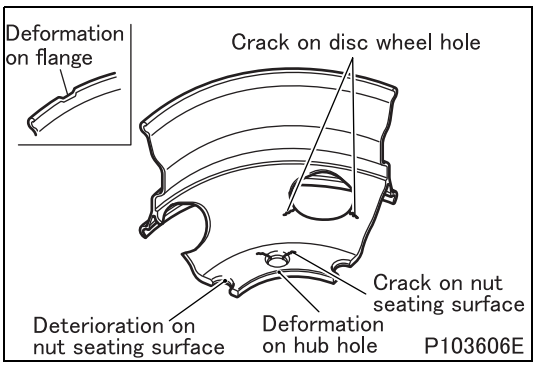

■ Inspection: Disc wheel

(1) Visual inspection

- Visually inspect the disc wheel for deformation, crack, deterioration, stepped wear on the wheel hub mounting surface. If any abnormality is found, replace the disc wheel with a new one.
- If any abnormality is found on the disc wheel, inspect the wheel hub. (See Gr26A, 26B, and 27.)

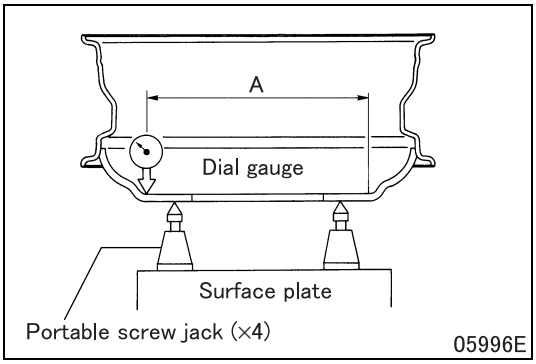

(2) Flatness

- Measure the flatness of specified position A from the center of the disc wheel. Measurement should be performed on the circles at twelve equally divided positions <6-hole wheel> or sixteen equally divided positions <8-hole wheel>.

Wheel	A
19.5 × 6.75-136-12	ϕ175 mm {6.89 in.} ϕ275 mm {10.8 in.}
22.5 × 7.50-162-13	ϕ235 mm {9.25 in.} ϕ340 mm {13.4 in.}

- If the measurement deviates from the standard value, replace the disc wheel.

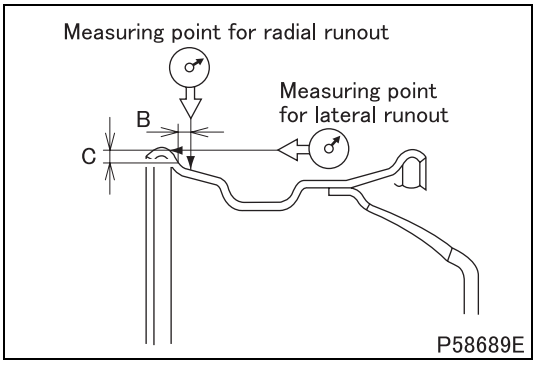

(3) Runout

- Measure the runout at the locations on the periphery of disc wheel indicated in the drawing.
  B: 8 mm {0.31 in.}
  C: 8 mm {0.31 in.}
- If the measurement deviates from the standard value, replace the disc wheel.

◆Installation procedure◆

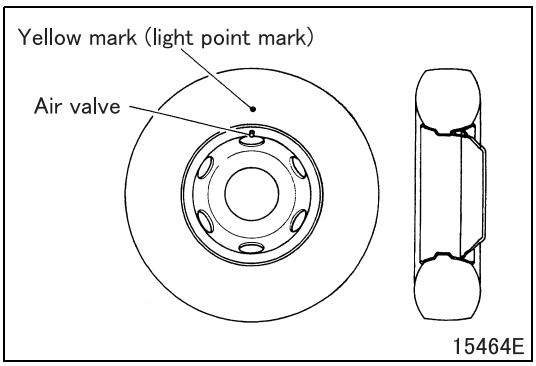

■ **Installation: Tire**

<When there is no red mark on the tire>

- Align the yellow mark (light point mark) on the tire with the air valve position of the disc wheel to assemble.

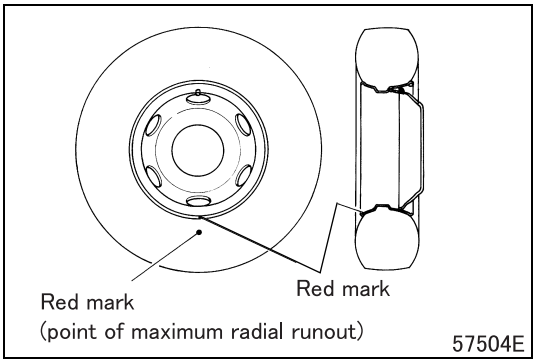

<When there is a red mark on the tire>

- Align the red mark (point of maximum radial runout) on the tire with the red mark on the disc wheel to assemble.

◆Work after installation◆

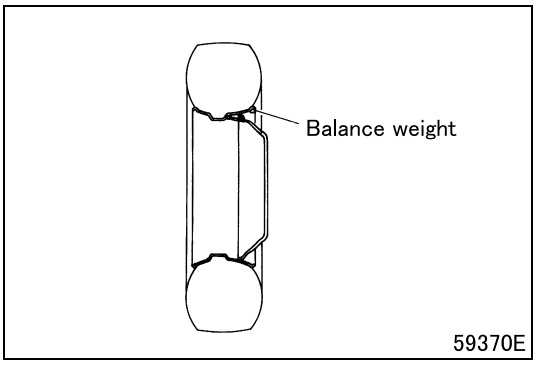

■ **Installation: Balance weight**

- Install balance weights on both sides of the disc at balancing tire positions so that the static unbalance tolerance does not exceed the limit.

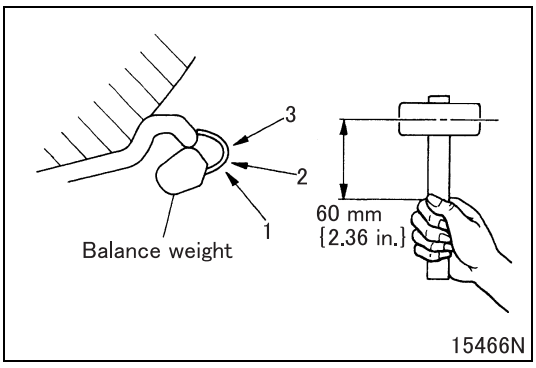

- Use a one pond resin hammer to drive in balance weights.
- To install a balance weight, tap the clip of the weight in the center at 1, 2 and 3 in that order.

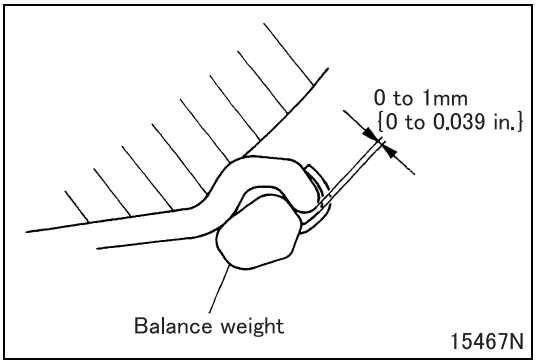

- Leave a clearance of approx. 0 to 1 mm {0 to 0.039 in.} between the clip and the disc wheel. Ensure that the balance weight is not loose after installation.
- Do not use a balance weight that has been improperly tapped or dropped to the floor during installation attempt.
- When 2 weights are being installed, these weights should be as much equal to each other as possible in weight. Also remember that the center point between the weights will become the support point for a balancer.

Group 33

Front Suspension

Table of Contents

Back

Home

MITSUBISHI FUSO TRUCK OF AMERICA, Inc.

Pub.No.TWME0709-33

INDEX

STRUCTURE AND OPERATION
1. Front Suspension 33-2

TROUBLESHOOTING 33-3

SHOCK ABSORBER 33-4

LEAF SPRING 33-6

1. Front Suspension

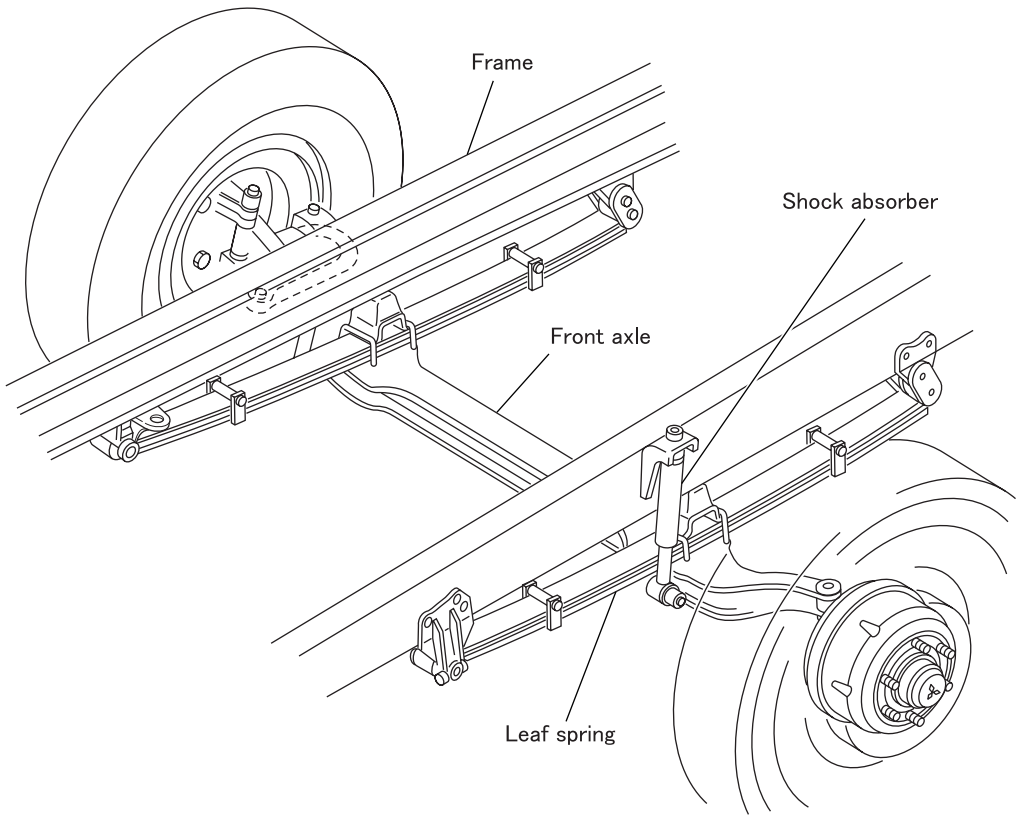

- Leaf springs and shock absorbers are installed between the frame and front axle, which support the weight of a vehicle in addition to absorbing vibrations and shocks from the road so that they are not directly transmitted to the vehicle body, protecting the body, passengers and cargo. Furthermore, the front suspension system aims to stabilize running by controlling irregular vibrations of wheels.

Possible causes \ Symptoms		Feels as if floating	Tends to be noisy	Road bumps/pits received as shocks	Heavy rolling	Cyclical shocks from underneath	Vehicle tilted	Poor linearity	Reference Gr
Shock absorber	Substantial loss of oil and damping capacity	O							
	Rubber bushing worn		O						
	Loose fitting		O						
Leaf spring	Cracks or other damage			O			O		
	Broken		O				O		
	Spring bracket broken		O						
	Loose U-bolt		O				O		
	Spring bushing worn		O				O		
Looseness of shackle pin in thrust direction			O						
Bump stopper damaged or broken			O						
Tire	Uneven wear				O			O	Gr31
	Tire and wheel needs balancing					O		O	
	Excessive tire pressure			O					

SHOCK ABSORBER

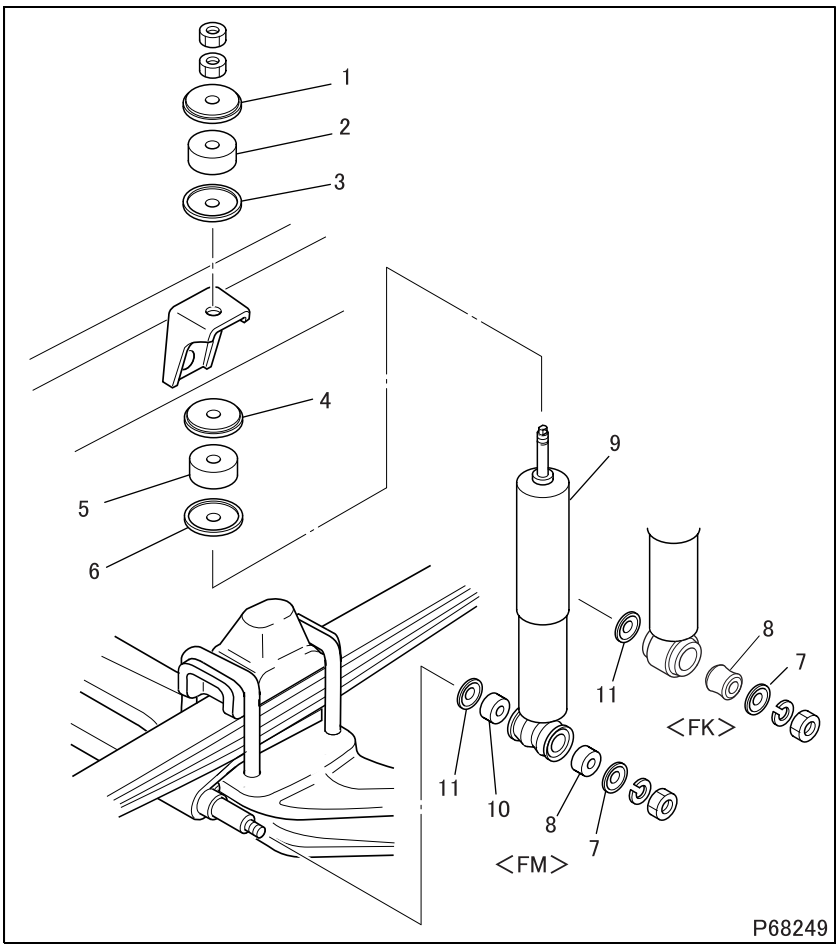

●Removal sequence

1 Washer
2 Rubber bushing A
3 Centering washer
4 Centering washer <FM>
5 Rubber bushing A
6 Washer
7 Washer
8 Rubber bushing B
9 Shock absorber
10 Rubber bushing B <FM>
11 Washer

●Installation sequence

Follow the removal sequence in reverse.

◆Installation procedure◆

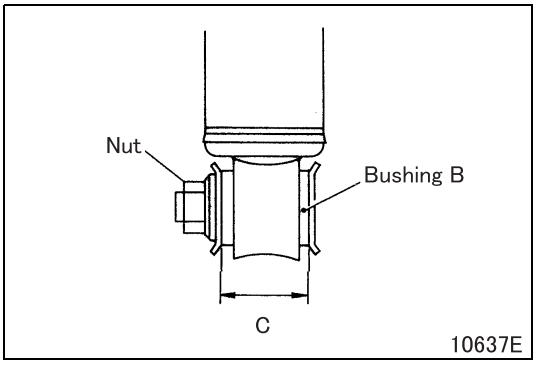

■ Installation: Rubber bushing B

- Tighten the nut for the dimension C as indicated below.
  C : 32 mm {1.26 in.} <FK>
  45 mm {1.77 in.} <FM>

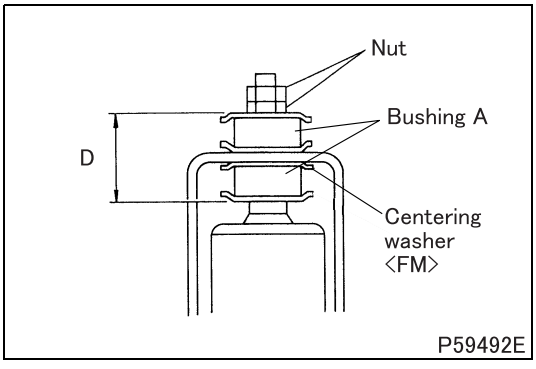

■ Installation: Rubber bushing A

- Tighten the nut for the dimension D as indicated below.
  D : 34.5 mm {1.36 in.} <FK>
  48 mm {1.89 in.} <FM>

M E M O

LEAF SPRING

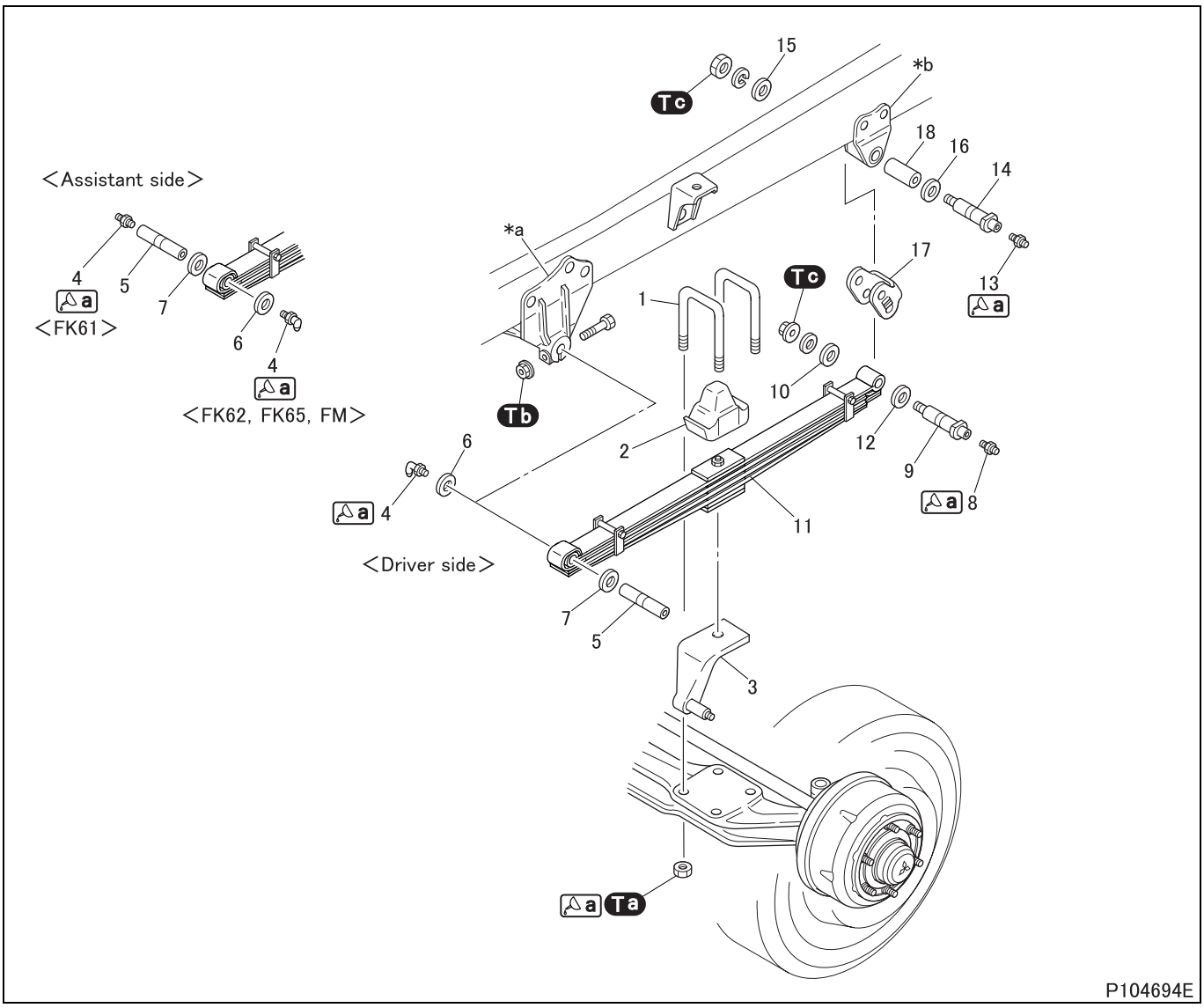

●Removal sequence

1 U-bolt
2 Bump stopper
3 Lower bracket
4 Grease nipple
5 Shackle pin A
6 Side washer
7 Side washer
8 Grease nipple
9 Shackle pin B
10 Side washer
11 Leaf spring (See later section.)
12 Side washer
13 Grease nipple
14 Shackle pin C
15 Side washer
16 Side washer
17 Shackle link
18 Bracket bushing

***a:** Front spring front bracket
***b:** Front spring rear bracket

●Installation sequence

Follow the removal sequence in reverse.

Service standards (Unit: mm {in.})

Location	Maintenance item		Standard value	Limit	Remedy
5, 9, 11	Clearance between shackle pin and leaf spring bushing	FK	0 to 0.12 {0 to 0.0047}	0.3 {0.012}	Replace
		FM	0 to 0.15 {0 to 0.0059}		
5, *a	Clearance between shackle pin A and front spring front bracket	FK	0 to 0.04 {0 to 0.0016}	0.3 {0.012}	Replace
		FM	0 to 0.05 {0 to 0.0020}		
7, *a	Clearance between side washer and front spring front bracket		0.27 to 1.2 {0.011 to 0.047}	1.5 {0.059}	Replace
9, 14, 17	Clearance between shackle pin and shackle link	FK	0.02 to 0.24 {0.00079 to 0.0094}	0.3 {0.012}	Replace
		FM	0.02 to 0.25 {0.00079 to 0.0098}		
12, 17	Clearance between side washer and shackle link	FK	0.55 to 2.4 {0.014 to 0.087}	2.5 {0.098}	Replace
		FM	0.27 to 1.6 {0.011 to 0.063}		
14, 18	Clearance between shackle pin C and bracket bushing	FK	0.02 to 0.14 {0.00079 to 0.0055}	0.3 {0.012}	Replace
		FM	0.02 to 0.15 {0.00079 to 0.0059}		
16, *b	Clearance between side washer and front spring rear bracket	FK	0 to 1.7 {0 to 0.067}	2.0 {0.079}	Replace
		FM	0.07 to 1.3 {0.028 to 0.051}		

Tightening torque (Unit: N·m {ft.lbs, kgf·m})

Mark	Parts to be tightened		Tightening torque	Remarks
Ta	Nut (U-bolt mounting)	FK	204 to 276 {150 to 205, 20.8 to 28.2}	Wet
		FM	404 to 548 {295 to 405, 41.2 to 55.8}	
Tb	Nut (shackle pin A mounting)		80 to 110 {58 to 80, 8.0 to 11}	–
Tc	Nut (shackle pin B, C mounting)	FK	190 to 260 {140 to 190, 19 to 26}	–
		FM	260 to 340 {190 to 250, 26 to 35}	

Lubricant and/or sealant

Mark	Points of application	Specified lubricant and/or sealant	Quantity
△a	Supply from grease nipple	Chassis grease [NLGI No.1 (Li soap)]	As required
	Thread area of nut		

Special tools (Unit: mm {in.})

Mark	Tool name and shape	Part No.	Application
Ca	Shackle pin setting bar A: ϕ4 {0.16}, B: ϕ12 {0.47}, C: 17 {0.67} 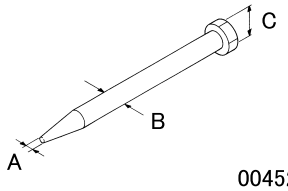 00452	MC023419	Removal and installation of shackle pin A mounting bolt

Mark	Tool name and shape	Part No.	Application
b	Spring pin remover A: M22 × 1.5 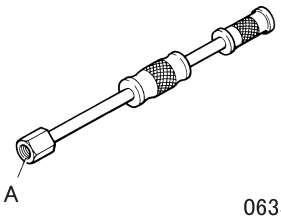 06350	MB999112	Removal of shackle pin B, C <FK>
c	Shackle pin puller A: PT 1/8 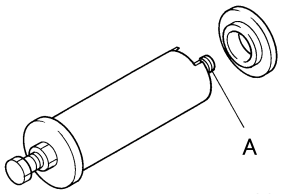 00453	MH061452	Removal of shackle pin

◆Inspection before removal◆

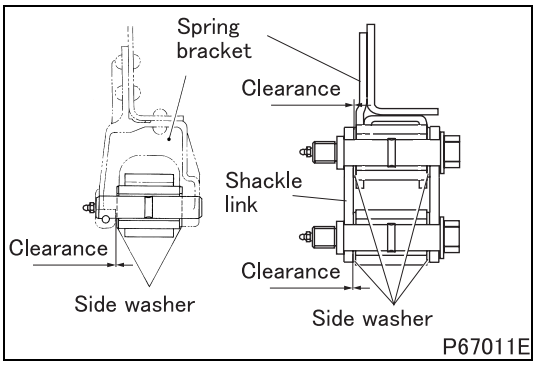

■ Inspection: Clearance between side washers and other parts

- Measure clearance between the side washers and other parts using a feeler gauge.
- If the measurement exceeds the limit, replace the side washer. Side washers are available in the following four sizes: 3.2 mm {0.13 in.}, 3.5 mm {0.14 in.}, 3.8 mm {0.15 in.} and 4.0 mm {0.16 in.}

◆Removal procedure◆

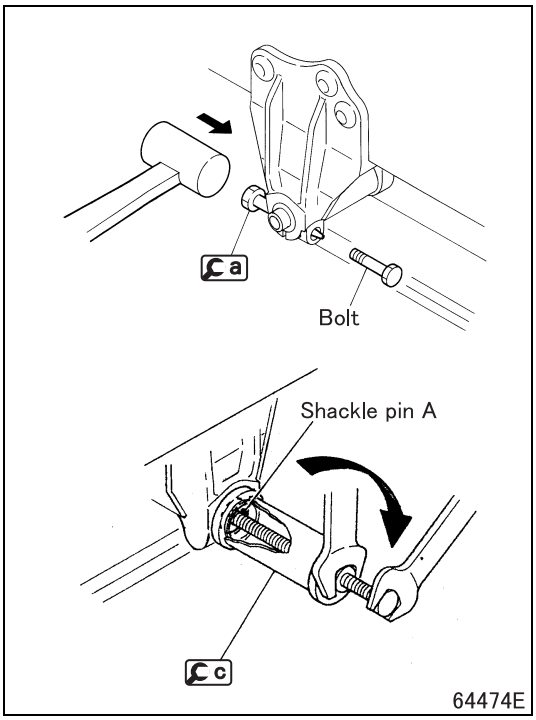

■ Removal: Shackle pin A

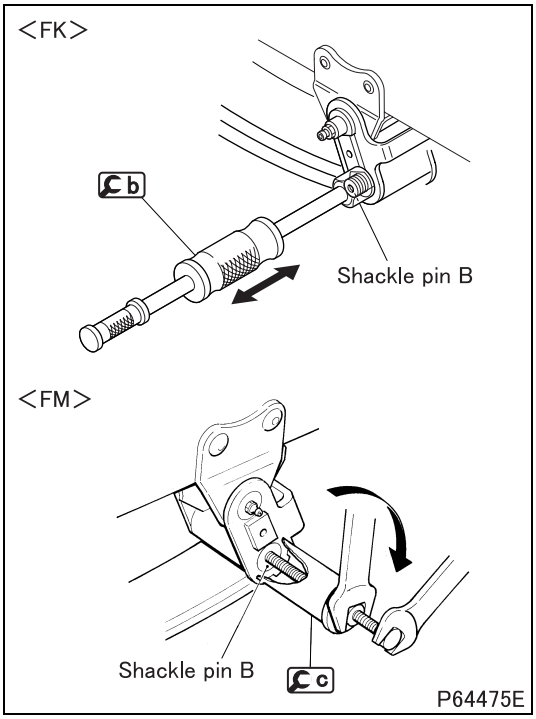

■ **Removal: Shackle pin B**

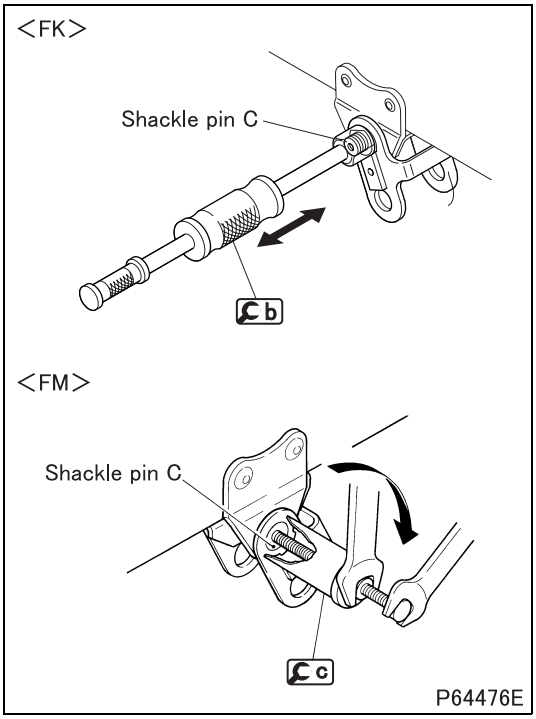

■ **Removal: Shackle pin C**

◆Installation procedure◆

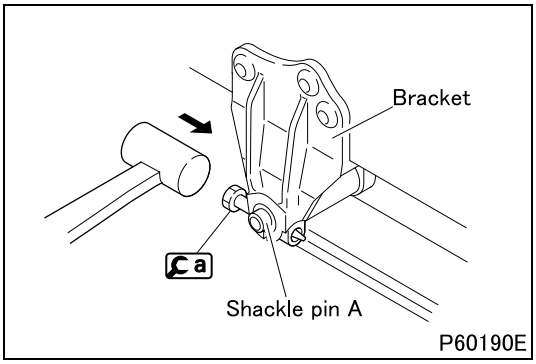

■ **Installation: Shackle pin A**

- Align the bolt hole of the front spring front bracket with the bolt groove of the shackle pin using a.

LEAF SPRING

Leaf Spring

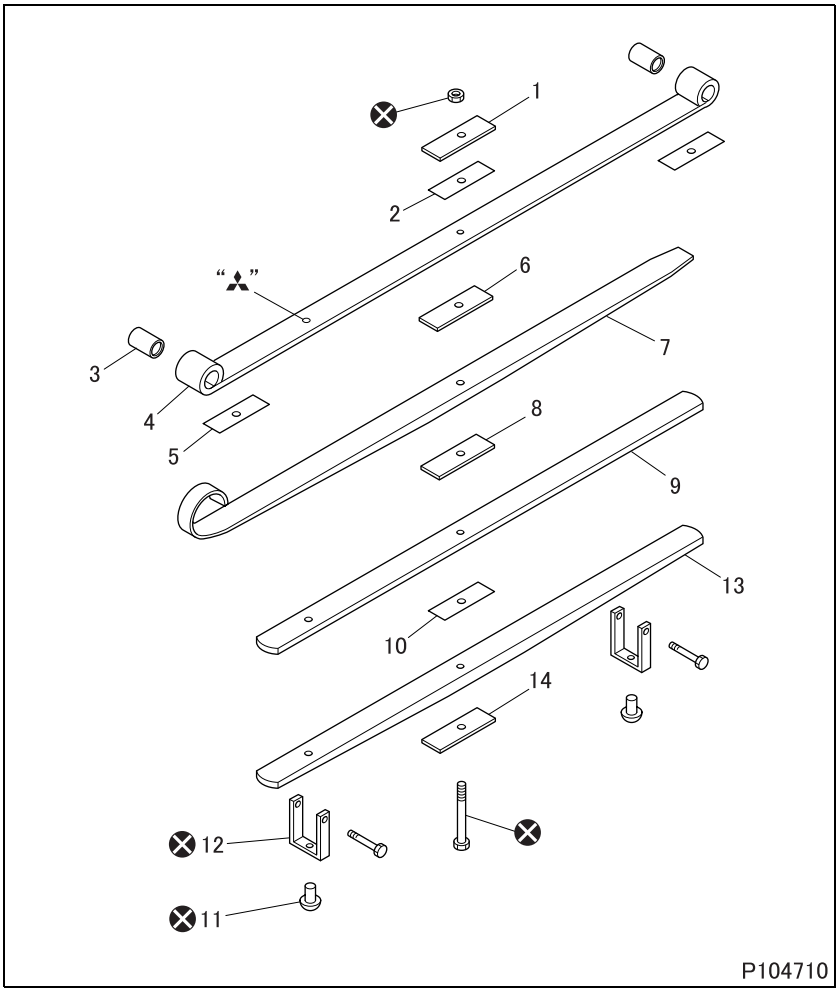

- Leaf spring assemblies vary slightly in number of spring leaves and other components depending on vehicle models. This section describes a typical one of these leaf spring assembly variations.

● Disassembly sequence

1 Spacer
2 Center spacer
3 Spring bushing
4 Leaf spring (No.1)
5 Silencer
6 Spacer
7 Leaf spring (No.2)
8 Spacer
9 Leaf spring (No.3)
10 Center spacer
11 Rivet
12 Clip
13 Leaf spring (No.4)
14 Spacer <Driver side>

⊗: Non-reusable parts

● Assembly sequence

Follow the disassembly sequence in reverse.

Special tools (Unit: mm {in.})

Mark	Tool name and shape	Part No.	Application
a	Busing installer A: Bushing installer A B: Bushing installer B 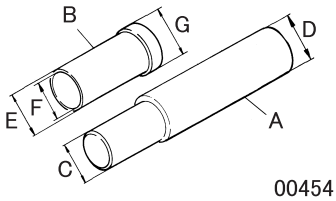 00454 C: φ25 {0.98} D: φ30 {1.18} E: φ28 {1.10} F: φ25 {0.98} G: φ32.8 {1.29}	MB999066 A: MB999067 B: MB999068	Removal and installation of spring bushing

◆Removal procedure◆

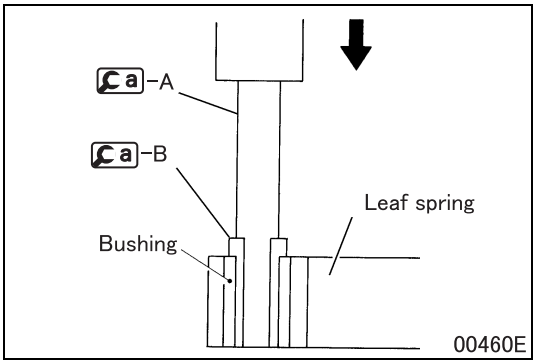

■ **Removal: Spring bushing**

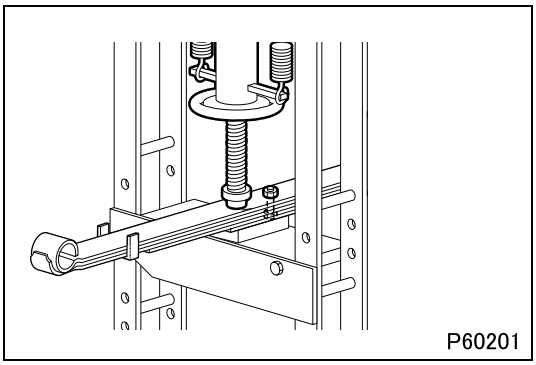

■ **Compression: Leaf spring**

- After removing spring bushings, compress the leaf springs using a press for subsequent operations.

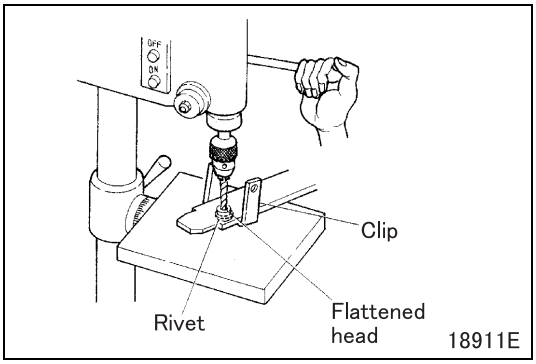

■ **Removal: Clip**

- Using a drill, break the flattened head of the rivet and remove the clip from the leaf spring.

◆Installation procedure◆

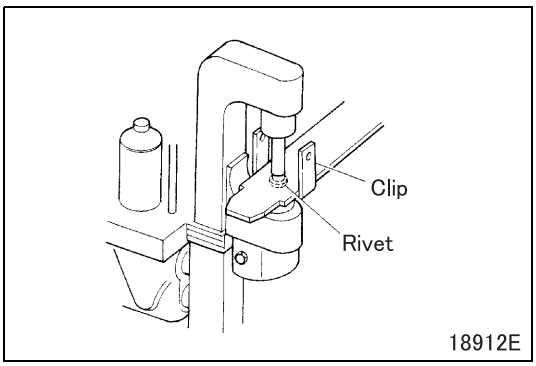

■ **Installation: Clip**

- Using a riveting machine, rivet a clip onto the leaf spring.

■ **Installation: Spring bushing**

- Install the spring bushing by following the removal procedure in reverse.
  (See "■**Removal: Spring bushing**".)

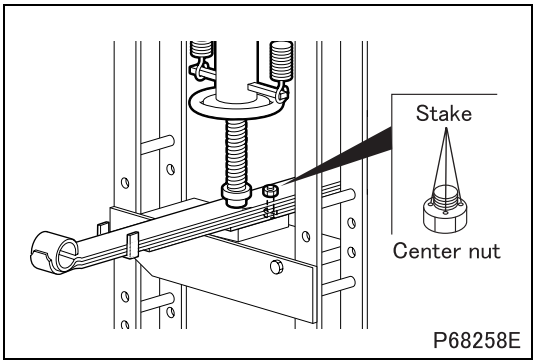

■ **Installation: Center nut**

- After tightening the center nut, stake it at three points as shown in the illustration.

Group 34A

Rear Suspension <LEAF>

Table of Contents

Back

Home

MITSUBISHI FUSO TRUCK OF AMERICA, Inc.

Pub.No.TWME0709-34A

INDEX

STRUCTURE AND OPERATION
1. Rear Suspension 34A-2

TROUBLESHOOTING 34A-3

SHOCK ABSORBER 34A-4

LEAF SPRING 34A-6

1. Rear Suspension

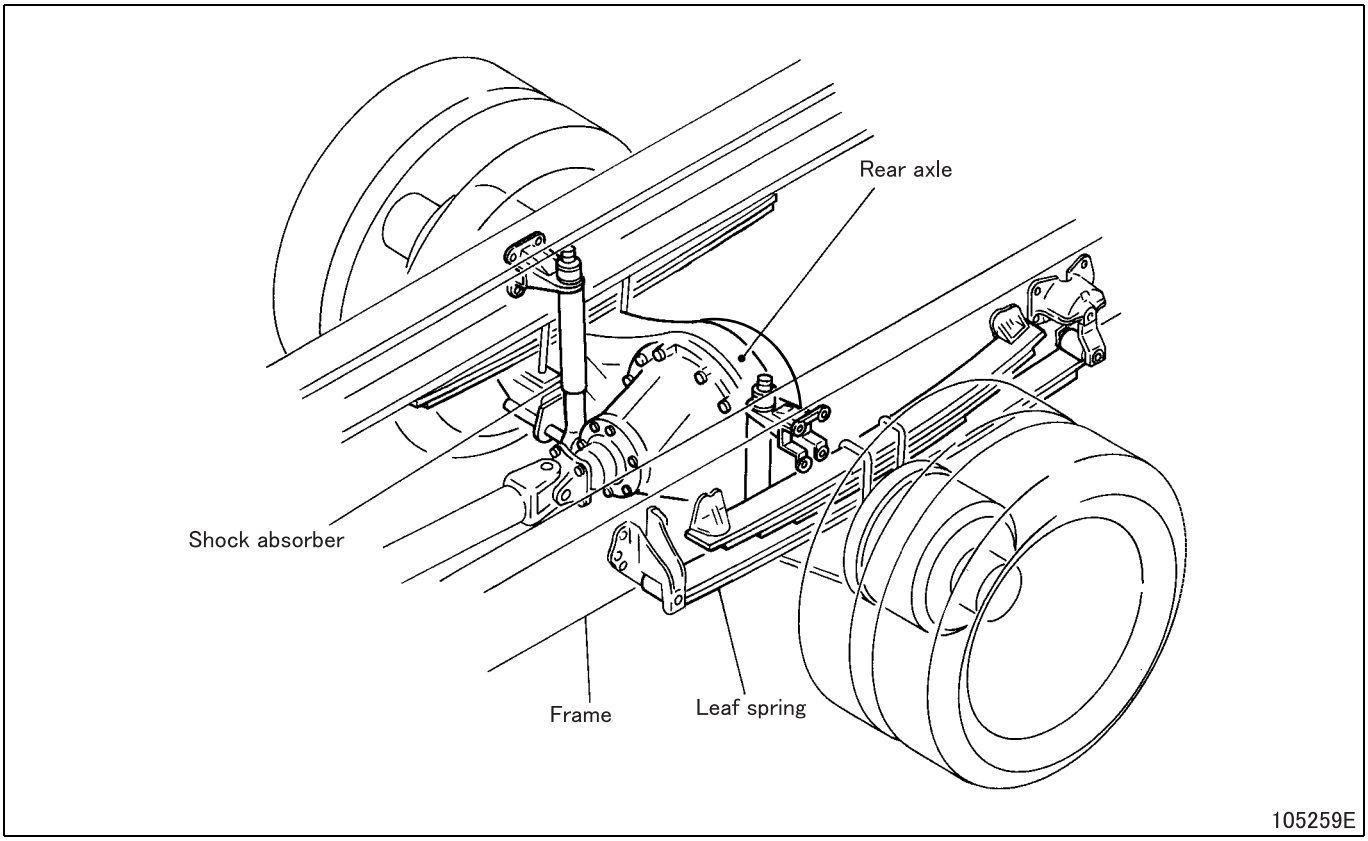

- Leaf springs and shock absorbers are installed between the frame and rear axle. This arrangement supports the vehicle mass while dampening vibration and shock from the road surface before they are transmitted to the body. As a result, the vehicle body, occupants and cargo are protected while irregular vibration from the wheels are controlled for driving stability.

Possible causes \ Symptoms		Feels as if floating	Tends to be noisy	Road bumps/pits received as shocks	Cyclical shocks from underneath	Reference Gr
Shock absorber	Substantial loss of oil and damping capacity	O				
	Rubber bushing worn		O			
	Loose fitting		O			
Leaf spring	Cracks or other damage			O		
	Broken		O			
	Spring bracket broken		O			
	Loose U-bolt		O			
	Bushing worn		O			
Looseness of shackle pin in thrust direction			O			
Sliding seat <FM> and helper stopper damaged or broken			O			
Tire	Uneven wear				O	Gr31
	Tire and wheel needs balancing				O	
	Excessive tire pressure			O		

SHOCK ABSORBER

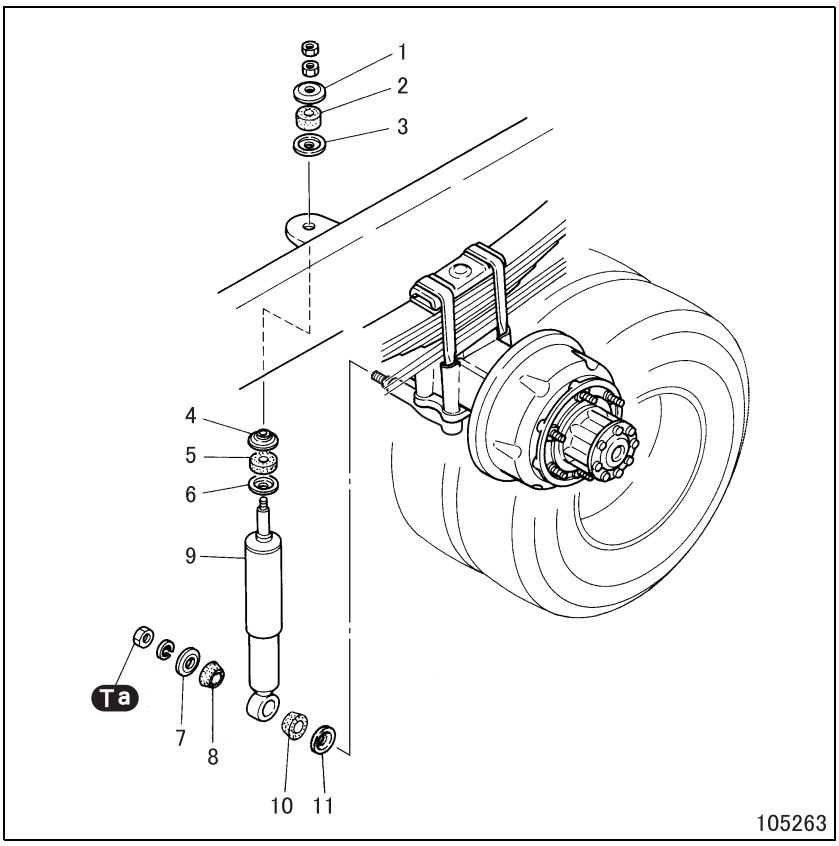

● Removal sequence

1 Washer
2 Rubber bushing
3 Centering washer
4 Centering washer
5 Rubber bushing
6 Washer
7 Washer
8 Rubber bushing
9 Shock absorber
10 Rubber bushing
11 Washer

● Installation sequence

Follow the removal sequence in reverse.

Tightening torque (Unit: N·m {ft.lbs, kgf·m})

Mark	Parts to be tightened	Tightening torque	Remarks
Ta	Nut (rubber bushing mounting)	90 to 130 {66 to 96, 9.5 to 13}	–

◆Installation procedure◆

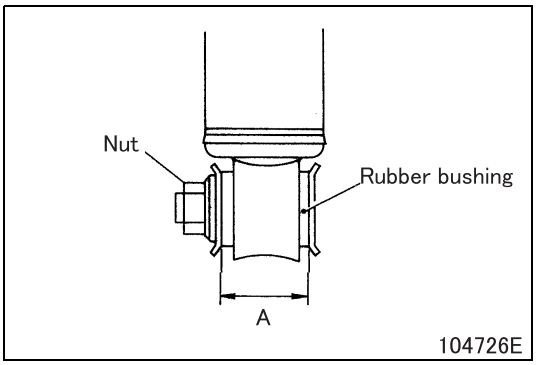

■ Installation: Rubber bushing

- Make adjustment with nuts so that the illustrated dimension A is as follows.
  A: 45 mm {1.77 in.}

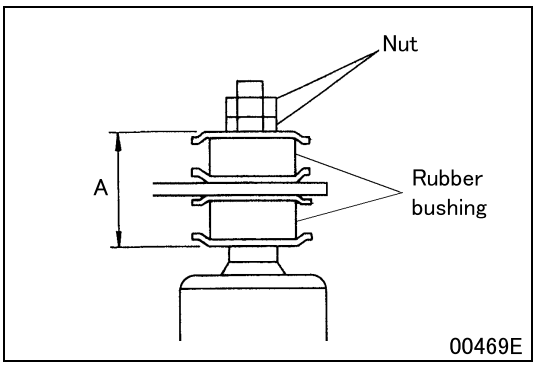

■ Installation: Rubber bushings

- After tightening the nut, make sure that the illustrated dimension A is as follows.
  A: 48 mm {1.89 in.}

M E M O

LEAF SPRING

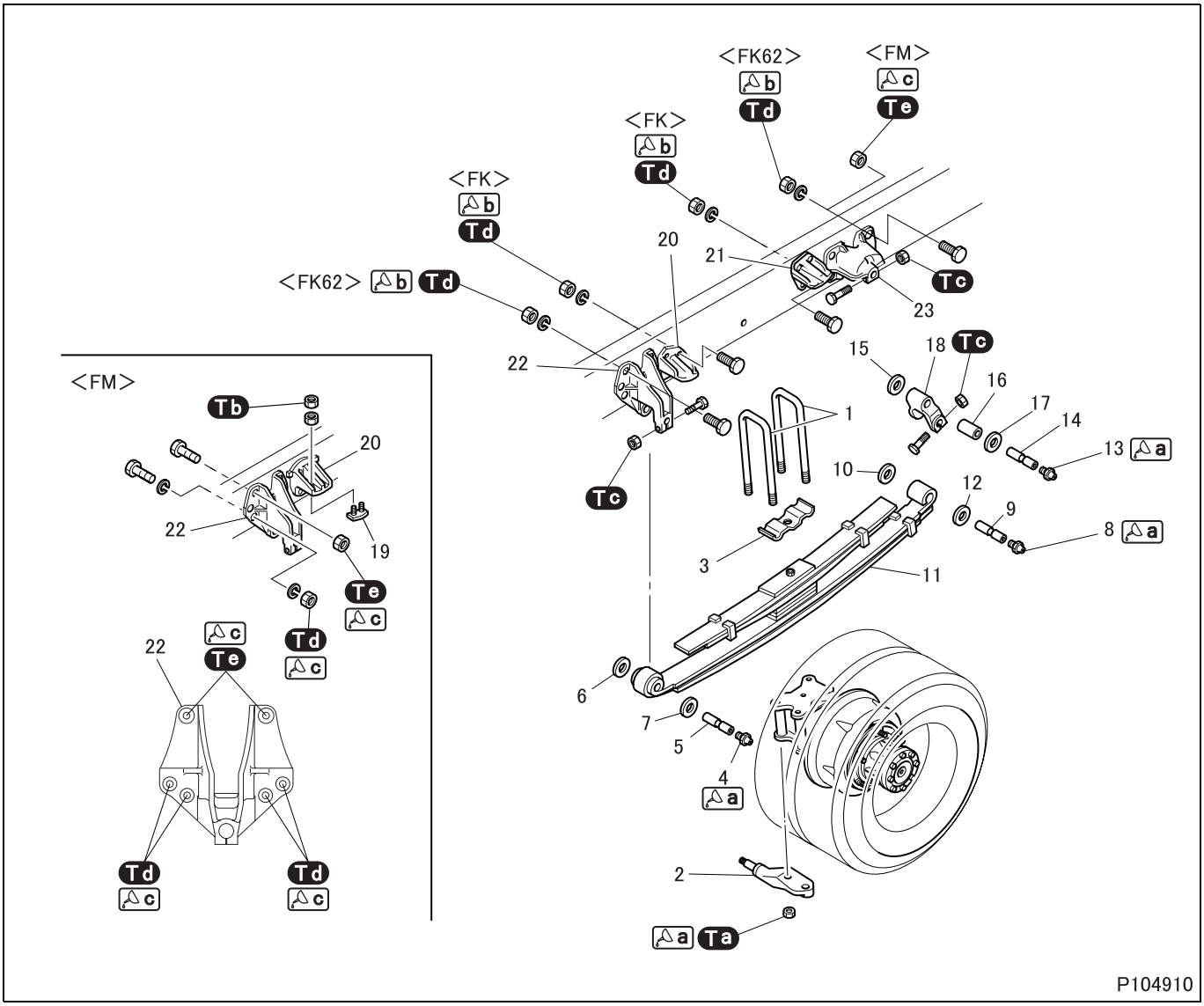

●Removal sequence

1 U-bolt
2 Shock absorber lower bracket
3 Rear spring pad
4 Grease nipple
5 Shackle pin A
6 Side washer
7 Side washer
8 Grease nipple
9 Shackle pin B
10 Side washer
11 Leaf spring (See later section.)
12 Side washer
13 Grease nipple
14 Shackle pin C
15 Side washer
16 Bushing
17 Side washer
18 Shackle link
19 Sliding seat <FM>
20 Helper stopper front
21 Helper stopper rear
22 Rear spring front bracket
23 Rear spring rear bracket

●Installation sequence

Follow the removal sequence in reverse.

Service standards (Unit: mm {in.})

Location	Maintenance item		Standard value	Limit	Remedy
5, 9, 11	Clearance between shackle pin and leaf spring bushing	FK	0 to 0.12 {0 to 0.0047}	0.3 {0.012}	Replace
		FM	0 to 0.15 {0 to 0.0059}		
5, 22	Clearance between shackle pin A and rear spring front bracket	FK	0 to 0.04 {0 to 0.0016}	0.3 {0.012}	Replace
		FM	0 to 0.05 {0 to 0.0020}		
7, 22	Clearance between side washer and rear spring front bracket		0.07 to 1.03 {0.0028 to 0.041}	1.3 {0.051}	Replace
9, 18	Clearance between shackle pin B and shackle link		0 to 0.04 {0 to 0.0016}	0.3 {0.012}	Replace
12, 18	Clearance between side washer and shackle link		0.07 to 1.03 {0.0028 to 0.041}	1.3 {0.0051}	Replace
14, 16	Clearance between shackle pin C and bushing	FK	0.02 to 0.14 {0.00079 to 0.0055}	0.3 {0.012}	Replace
		FM	0.03 to 0.15 {0.0012 to 0.059}		
14, 23	Clearance between shackle pin C and rear spring rear bracket	FK	0 to 0.04 {0 to 0.0016}	0.3 {0.012}	Replace
		FM	0 to 0.05 {0 to 0.0020}		
17, 23	Clearance between side washer and rear spring rear bracket		0.07 to 0.73 {0.0028 to 0.029}	1.0 {0.39}	Replace

Tightening torque (Unit: N·m {ft.lbs, kgf·m})

Mark	Parts to be tightened		Tightening torque	Remarks
Ta	Nut (U-bolt mounting)	FK	292 to 394 {215 to 290, 29.8 to 40.2}	Wet
		FM	404 to 548 {295 to 405, 41.2 to 55.8}	
Tb	Nut (sliding seat mounting) <FM>		59 to 84 {43 to 61, 6.0 to 8.5}	–
Tc	Nut (shackle pin mounting)		80 to 110 {58 to 80, 8.0 to 11}	–
Td	Nut (helper stopper mounting) <FK>		157 to 216 {115 to 160, 16 to 22}	Wet
	Nut (rear spring bracket mounting) <Except FK61>			
Te	Nut (rear spring bracket mounting) <FM>		200 to 270 {145 to 200, 20.4 to 27.5}	Wet

Lubricant and/or sealant

Mark	Points of application	Specified lubricant and/or sealant	Quantity
a	Supply through grease nipple	Chassis grease [NLGI No.1 (Li soap)]	As required
	Nut thread		
b	Nut thread <FK>	Loctite 271 and Nippon grease Rusfighter J36	As required
c	Nut thread <FM>	Nippon grease Rusfighter J36	As required

Special tools (Unit: mm {in.})

Mark	Tool name and shape	Part No.	Application
a	Shackle pin setting bar A: φ4 {0.16}, B: φ12 {0.47}, C: 17 {0.67} 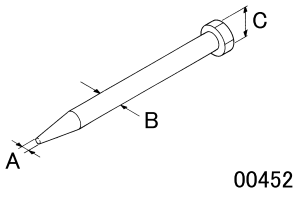 00452	MC023419	Removal and installation of shackle pin mounting bolt
b	Shackle pin puller A: PT 1/8 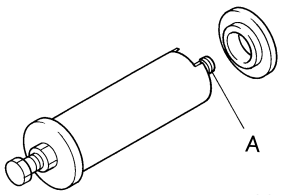 00453	MH061452	Removal of shackle pin

◆Inspection before removal◆

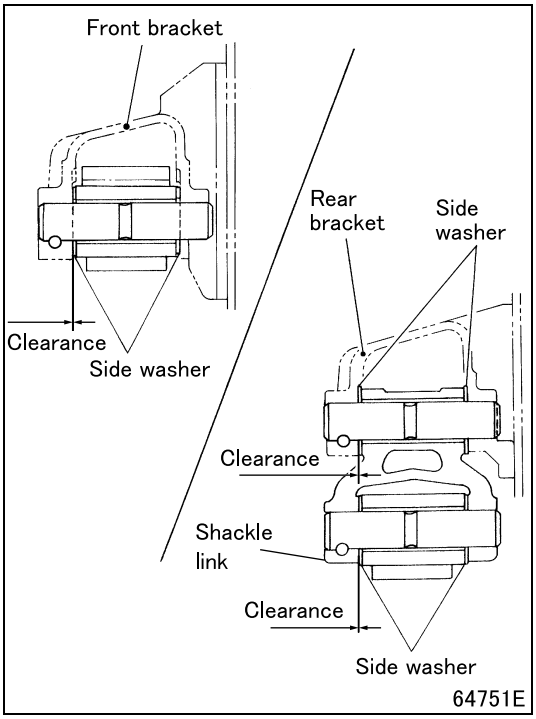

64751E

■ **Inspection: Clearance between side washers and other parts**

- Measure clearance between the side washers and other parts using a feeler gauge.
- If the measurement exceeds the limit, replace the side washer. Side washers are available in the following four sizes: 3.2 mm {0.13 in.}, 3.5 mm {0.14 in.}, 3.8 mm {0.15 in.} and 4.0 mm {0.16 in.}

◆Removal procedure◆

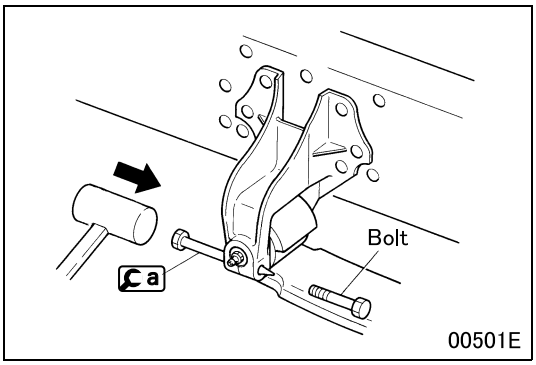

00501E

■ **Removal: Shackle pin A**

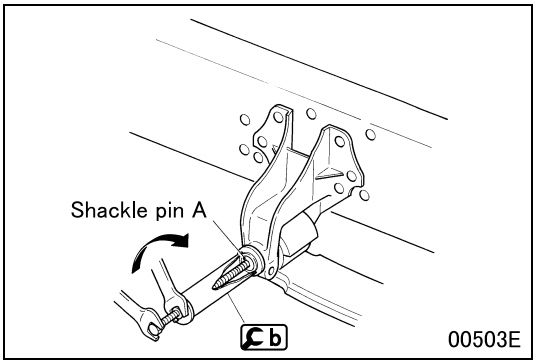

■ **Removal: Shackle pin B**

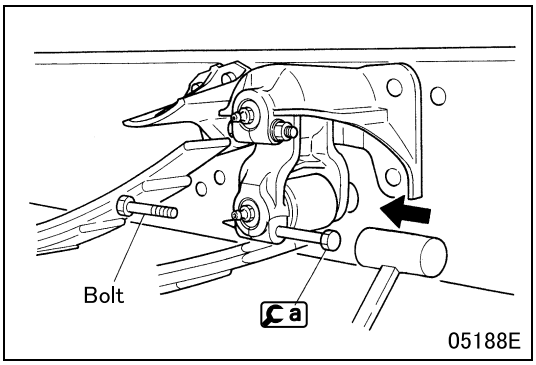

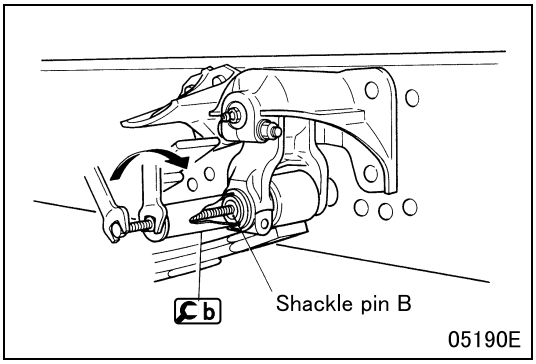

■ **Removal: Shackle pin C**

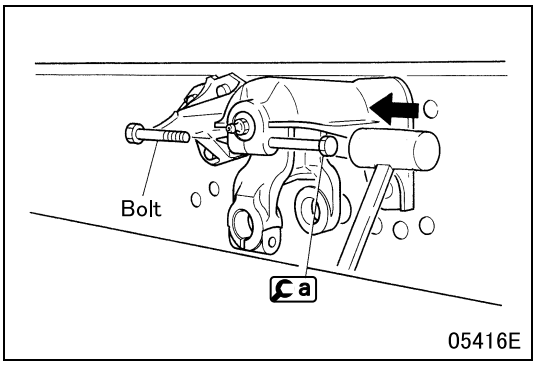

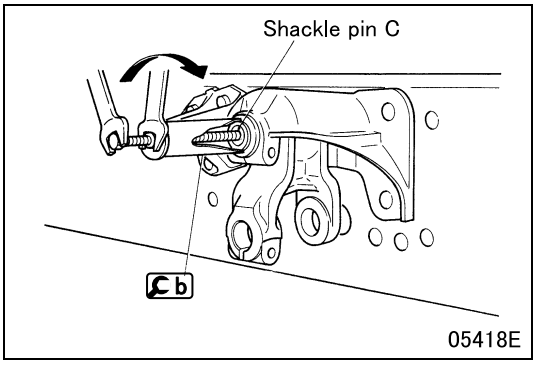

◆Installation procedure◆

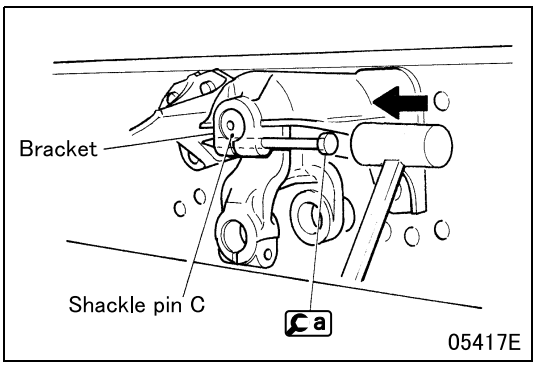

■ **Installation: Shackle pin C**

- Align the bolt hole of the rear spring rear bracket with the bolt groove of the shackle pin C using a.

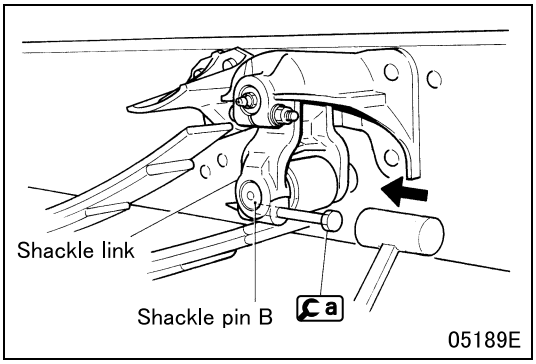

■ **Installation: Shackle pin B**

- Align the bolt hole of the shackle link with the bolt groove of the shackle pin B using a.

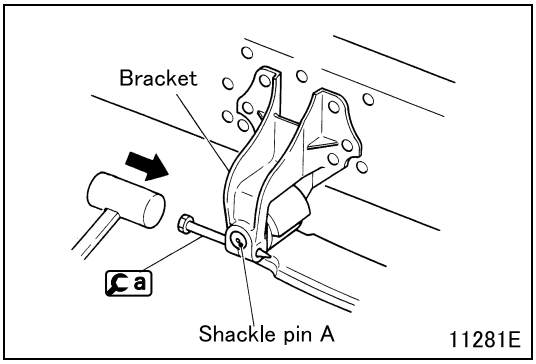

■ **Installation: Shackle pin A**

- Align the bolt hole of the rear spring front bracket with the bolt groove of the shackle pin A using a.

M E M O

LEAF SPRING

Leaf spring

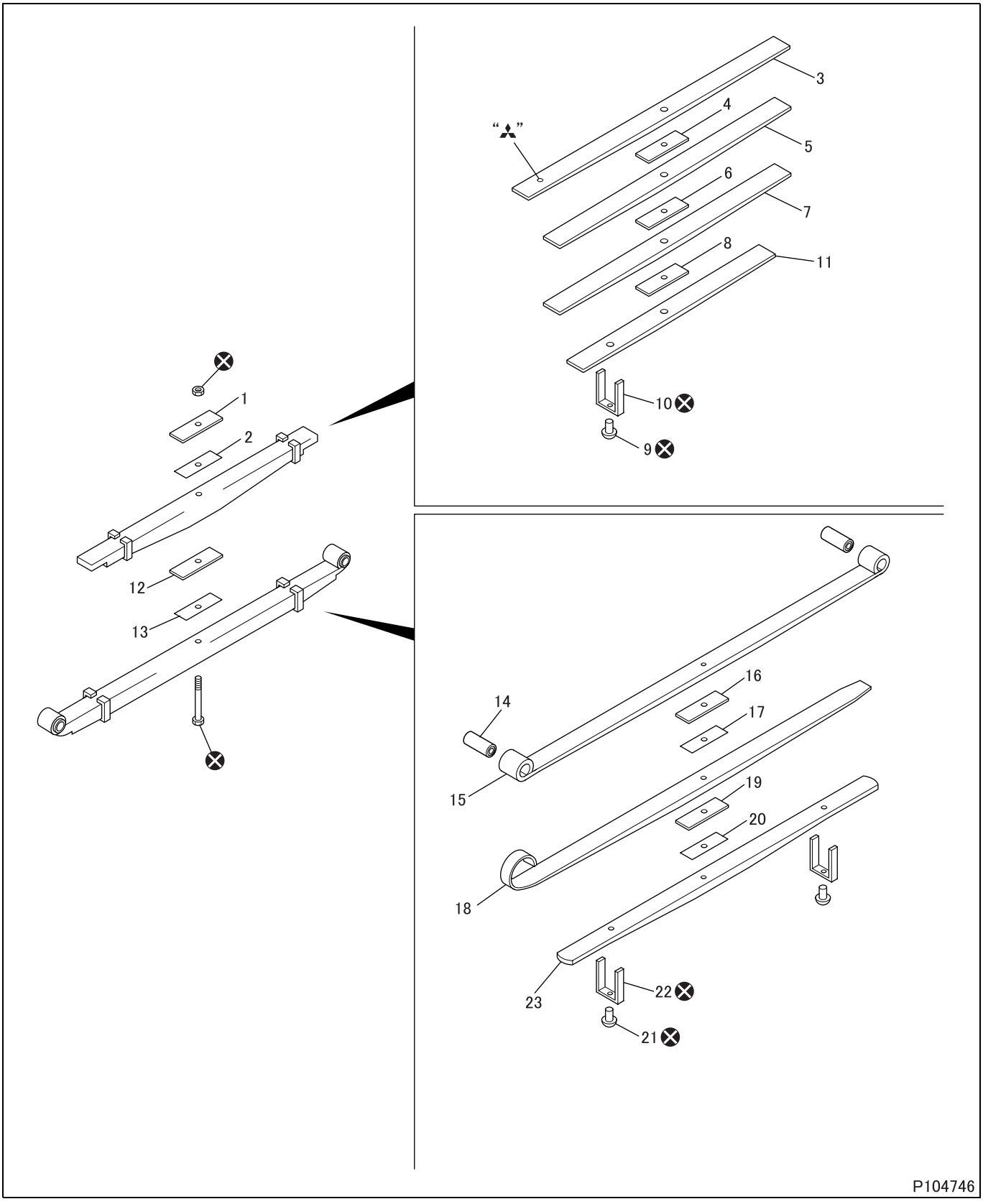

- Leaf spring assemblies vary slightly in number of spring leaves and other components depending on vehicle models. This section describes a typical one of these leaf spring assembly variations.

●Disassembly sequence

1 Spacer
2 Center spacer
3 Helper leaf spring (No. 1)
4 Spacer
5 Helper leaf spring (No. 2)
6 Spacer
7 Helper leaf spring (No. 3)
8 Spacer
9 Rivet
10 Clip
11 Helper leaf spring (No. 4)
12 Spacer
13 Center spacer
14 Spring bushing
15 Main leaf spring (No. 1)
16 Spacer
17 Center spacer
18 Main leaf spring (No. 2)
19 Spacer
20 Center spacer
21 Rivet
22 Clip
23 Main leaf spring (No. 3)

⊗: Non-reusable parts

●Assembly sequence

Follow the disassembly sequence in reverse.

Special tools (Unit: mm {in.})

Mark	Tool name and shape	Part No.	Application
a	Bushing installer A: Bushing installer A B: Bushing installer B 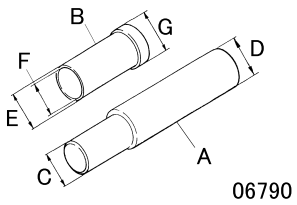 06790 C: φ25 {0.98} D: φ30 {1.18} E: φ28 {1.10} F: φ25 {0.98} G: φ32.8 {1.29}	MB999066 A: MB999067 B: MB999068	Removal and installation of spring bushing

◆Work before removal◆

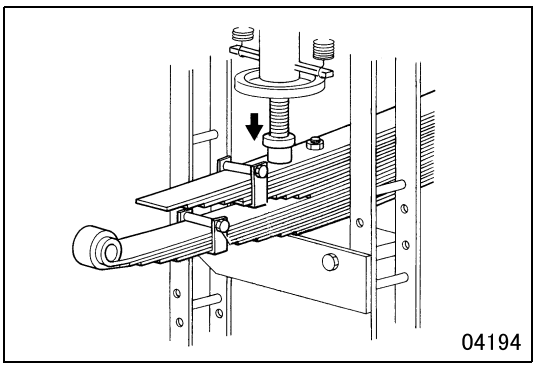

■ Compression: Leaf spring

- Compress the leaf springs using a press for subsequent operations.
- For a leaf spring using bending type clips, unbend the clip ends using a chisel or a similar tool.

◆Removal procedure◆

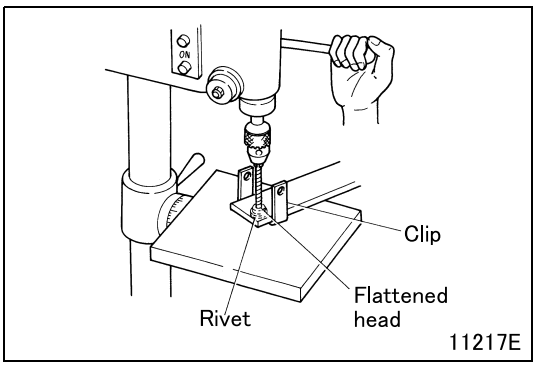

■ **Removal: Clip**

- Using a drill press, break the flattened head of the rivet and remove the clip from the leaf spring.

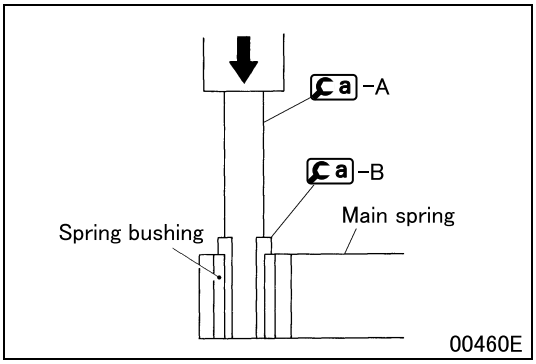

■ **Removal: Spring bushing**

◆Installation procedure◆

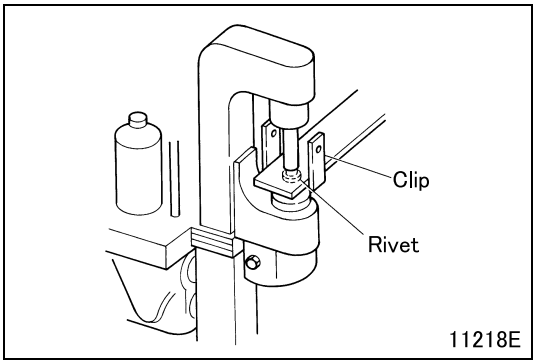

■ **Installation: Clip**

- Using a riveting machine, rivet a clip onto the leaf spring.

■ **Installation: Spring bushing**

- Install the spring bushing by following the removal procedure in reverse. (See "■**Removal: Spring bushing**".)

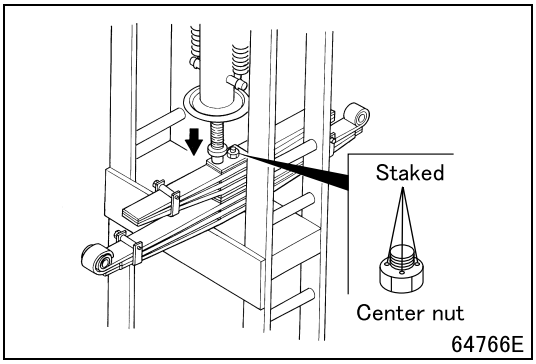

■ **Installation: Center nut**

- After installing the center nut, stake it at three points as shown in the illustration.

Group 34B

Rear Suspension <AIR>

Table of Contents

Back

Home

MITSUBISHI FUSO TRUCK OF AMERICA, Inc.

Pub.No.TWME0709-34B

INDEX

SPECIFICATIONS 34B-2

STRUCTURE AND OPERATION
- **1. Air Suspension 34B-2**
- **2. Air Suspension System 34B-3**
- **3. Leveling Valve 34B-4**

TROUBLESHOOTING 34B-5

ON-VEHICLE INSPECTION AND ADJUSTMENT
- **1. Adjustment of Air Spring Height 34B-6**

LEVELING VALVE 34B-7

AIR SPRING 34B-10

SHOCK ABSORBER 34B-14

LEAF SPRING 34B-16

LATERAL ROD 34B-18

SUPPLY VALVE ..... (See Gr35A.)

SPECIFICATIONS / STRUCTURE AND OPERATION

SPECIFICATIONS

Item		Specifications
Air spring (effective diameter × installed height)	mm {in.}	ϕ270 × 323 {10.6 × 12.7}
Leaf spring (length × width × thickness – No. of leaves)	mm {in.}	(665 + 430) × 80 × 35 – 2 {(26.2 + 16.9) × 3.15 × 1.38 – 2}

STRUCTURE AND OPERATION

1. Air Suspension

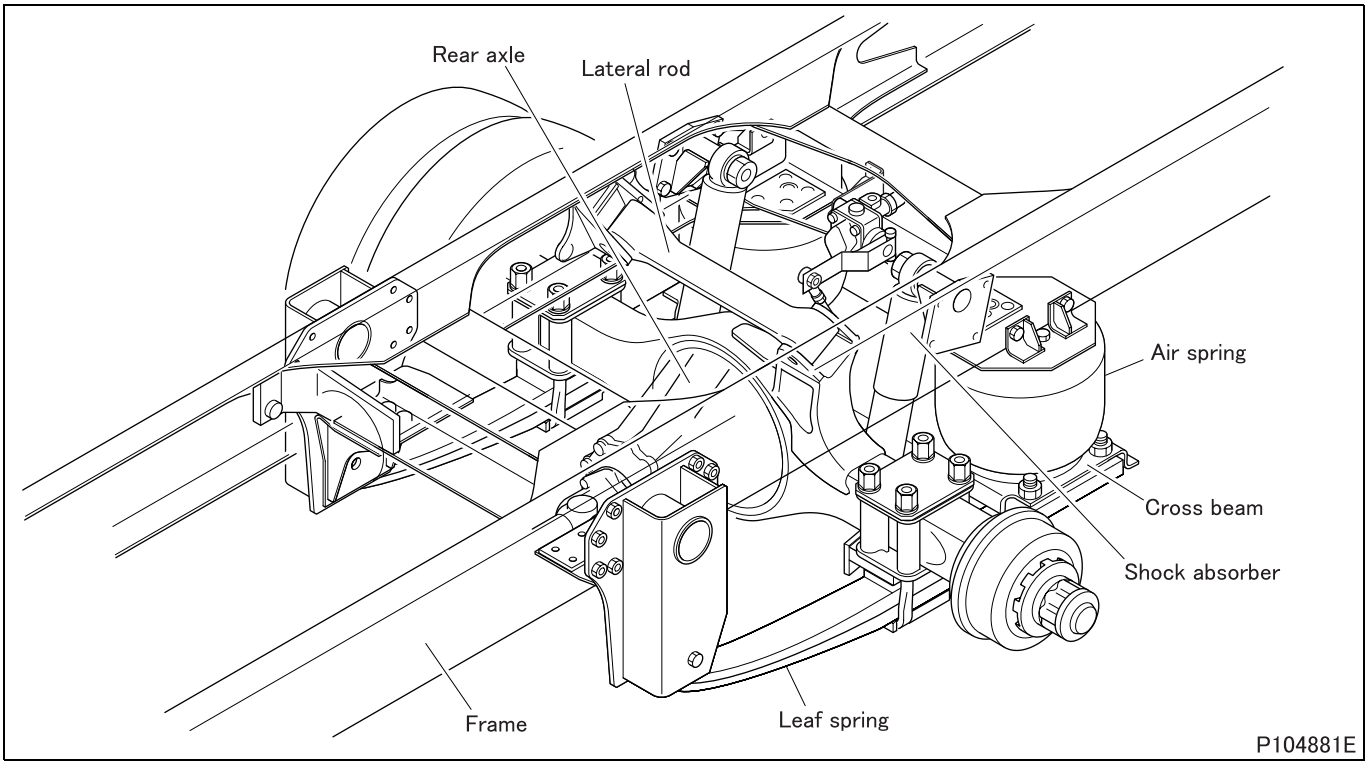

- Air spring, leaf spring, cross beam, and shock absorber are installed between frame and rear axle to support the vehicle body mass and absorb the vibration and shock from the road surface to prevent them from being directly transmitted to the vehicle body, thus protecting the vehicle body, occupants, and cargos. This construction also restricts irregular vibration of the wheels to ensure driving stability. The air spring is characterized by softer spring. Therefore, lateral rod is installed to reduce rolling which is larger in a softer suspension.
- Leveling valve is fitted on the rear axle housing. The leveling valve senses the increase and decrease of loads and controls the internal pressure of the air spring depending upon the load.

2. Air Suspension System

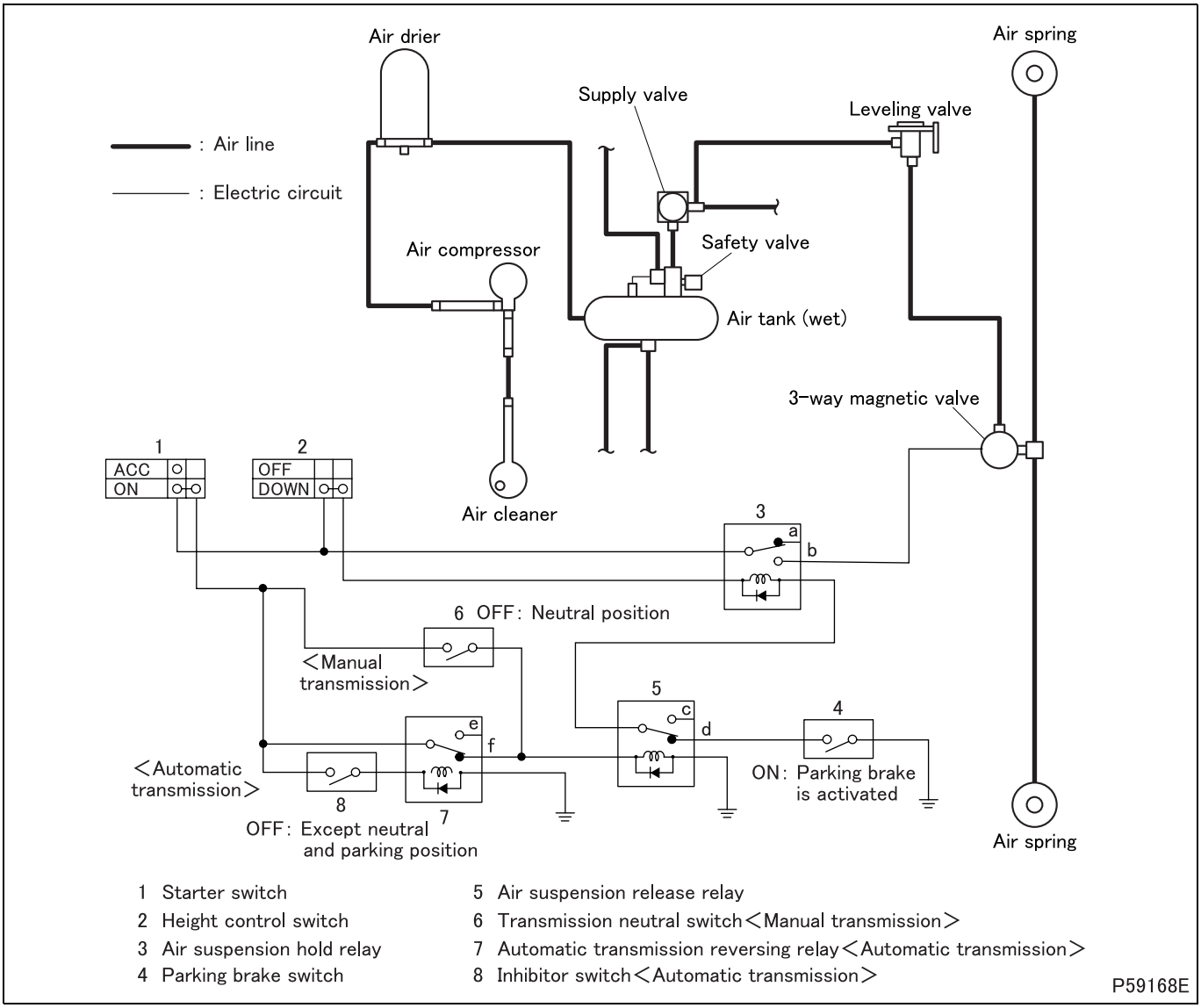

- The air suspension circuit operates 3-way magnetic valve to adjust the height of air spring. (Diagram shows air suspension circuit without current supply.)

2.1 Operable condition

If the following conditions are satisfied when height control switch is DOWN, 3-way magnetic valve operates.
In case of starter switch “ACC”

- The parking brake lever is activated. (Parking brake switch is ON.)

In case of starter switch “ON”

- The parking brake lever is activated. (Parking brake switch is ON.)
- The transmission is in the neutral position. (Transmission neutral switch is OFF or inhibitor switch is ON.)

The current flows as indicated below to operate 3-way magnetic valve.
1 → **2** (DOWN) → **3** (contact b) → **5** (ON) → **4** (ON) → GND

2.2 Non-operable condition

- With the transmission in the neutral position, when the parking brake is not engaged, air suspension hold relay is not activated. Therefore, operating current to 3-way magnetic valve is cut off and the 3-way magnetic valve does not operate. When the transmission is not in neutral position, air suspension hold relay is not activated as well.

3. Leveling Valve

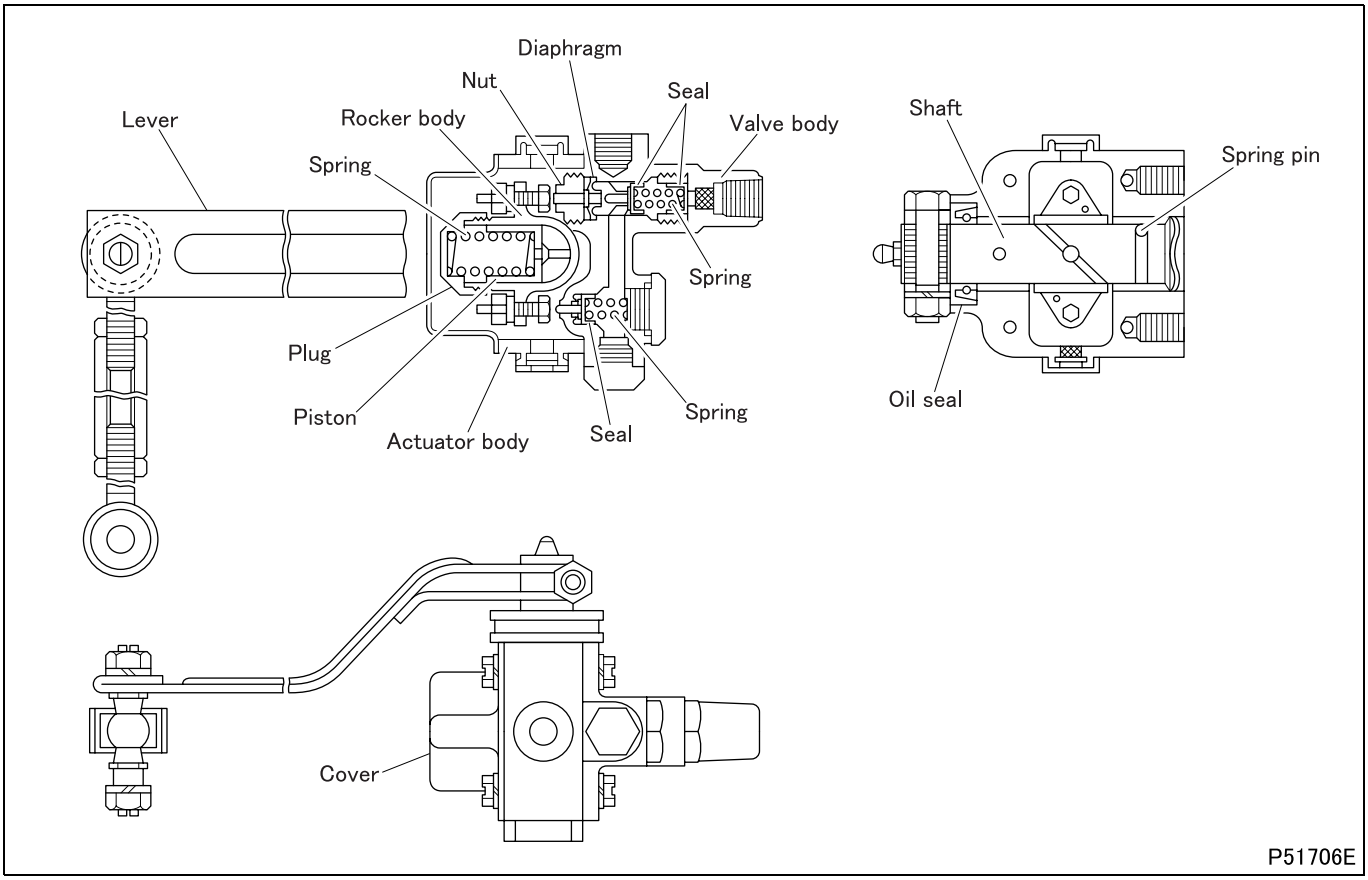

- The leveling valve is a control device which supplies or discharges compressed air to or from the air spring according to loads. The leveling valve body is mounted on the frame.

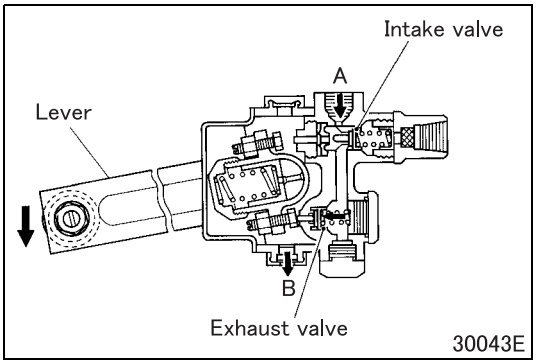

3.1 When load decreased

- The lever of the leveling valve is lowered below the neutral position. When the lever moves down beyond the dead zone, exhaust valve is opened. Since intake valve remains closed, therefore, the air from discharge port A flows through the opened exhaust valve and is discharged into the atmosphere from exhaust port B.

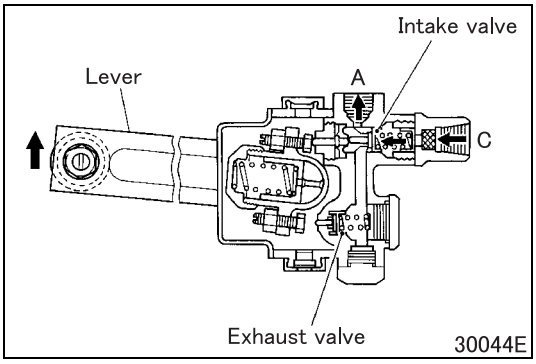

3.2 When load increased

- The lever of the leveling valve is raised above the neutral position. When the lever moves up beyond the dead zone, intake valve is opened. Since exhaust valve remains closed, therefore, the air flows from supply port C to discharge port A.

Possible causes \ Symptoms		Ride spongy	Noise generated with unloaded vehicle	Noise generated with loaded vehicle	Direct impact from uneven road surface	Periodic jolts during driving on smooth road surface	Large rolling	Large bouncing	Hard cushioning: Standard height of air spring too high	Hard cushioning: Standard height of air spring too low	Height control impossible	Too large amounts of air consumed during driving	Reference Gr
Leaf spring	Cracked or damaged				O								
	Broken		O										
	Spring bracket broken			O									
	U-bolts loose			O									
	Spring bushing worn		O										
Air spring	Damaged									O			
	Diaphragm cracked											O	
Shock absorber	Damping force decreased, oil leaking	O					O	O					
	Rubber bushing worn		O										
	Bolt loose		O										
Leveling valve	Faulty adjustment						O	O	O	O			
	Faulty function						O		O	O			
Tire	Tires worn unevenly					O							Gr31
	Tires and wheels out of balance					O							
	Inflation pressure too high				O				O				
Height control switch faulty											O		
Supply valve operation faulty											O		Gr35A
Air suspension 3-way magnetic valve operation faulty											O	O	
Air line connections to each device loose or broken												O	
Related relays and switches (transmission neutral switch, air suspension release relay, automatic transmission reversing relay, inhibitor switch and parking brake switch) operation faulty											O		Gr54

ON-VEHICLE INSPECTION AND ADJUSTMENT

1. Adjustment of Air Spring Height

Tightening torque (Unit: N·m {ft.lbs, kgf·m})

Location	Parts to be tightened	Tightening torque	Remarks
–	Lock nut	12 to 15 {8.9 to 11, 1.2 to 1.6}	–

Special tools

Mark	Tool name and shape	Part No.	Application
a	Height gauge 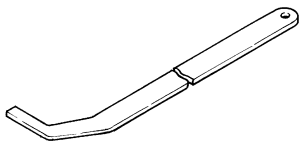 20974	MC811682	Measurement of air spring height

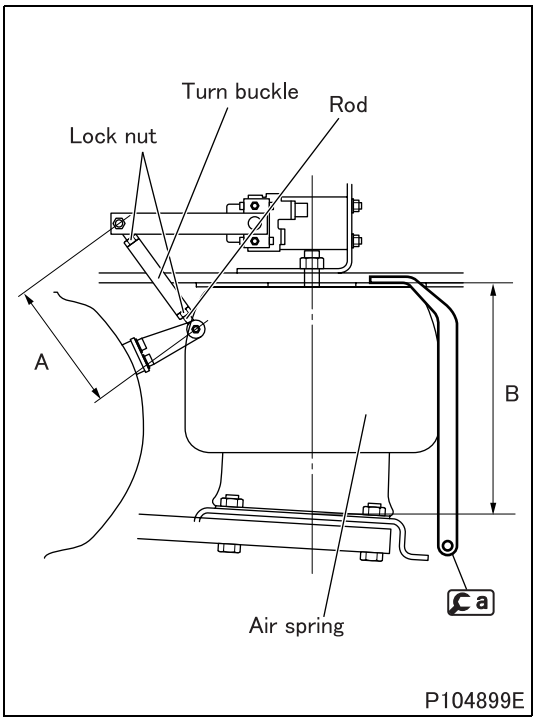

P104899E

CAUTION ⚠

- **Adjust air spring with no occupant in the vehicle.**

- Set air pressure in the air tank to the specified value.
- To prevent dead zone (play) of levelling valve from affecting adjustment, loosen lock nut of rod first, then turn turn buckle to shorten rod length A (distance between centers of eye sections at rod end). Then gradually extend the distance.
- Measure height of air spring using standard scale. When height B is the following value, tighten lock nut of rod.
  B: 329 mm {13.0 in.}

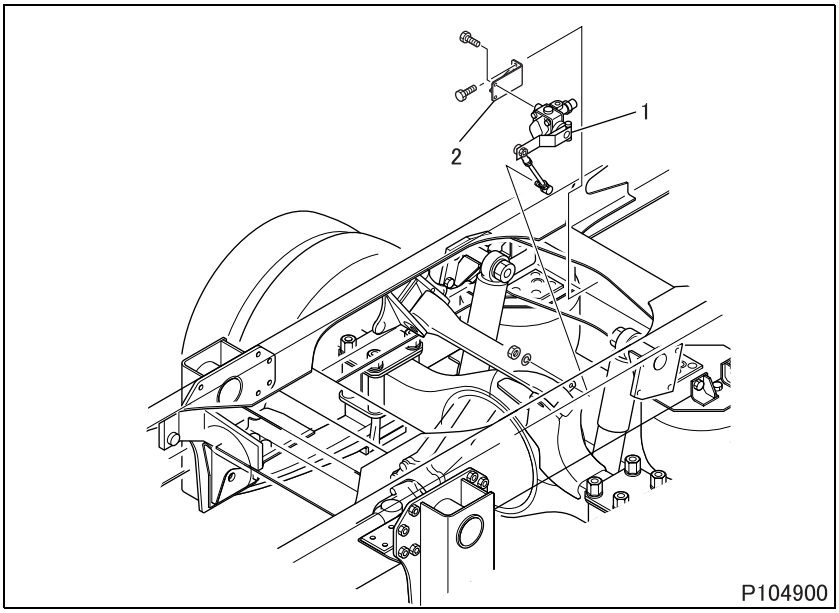

●Removal sequence

1 Leveling valve (See later section.)
2 Bracket

●Installation sequence

Follow the removal sequence in reverse.

- After installation, carry out the adjustment of air spring height. (See “ON-VEHICLE INSPECTION AND ADJUSTMENT”.)

LEVELING VALVE

Leveling valve

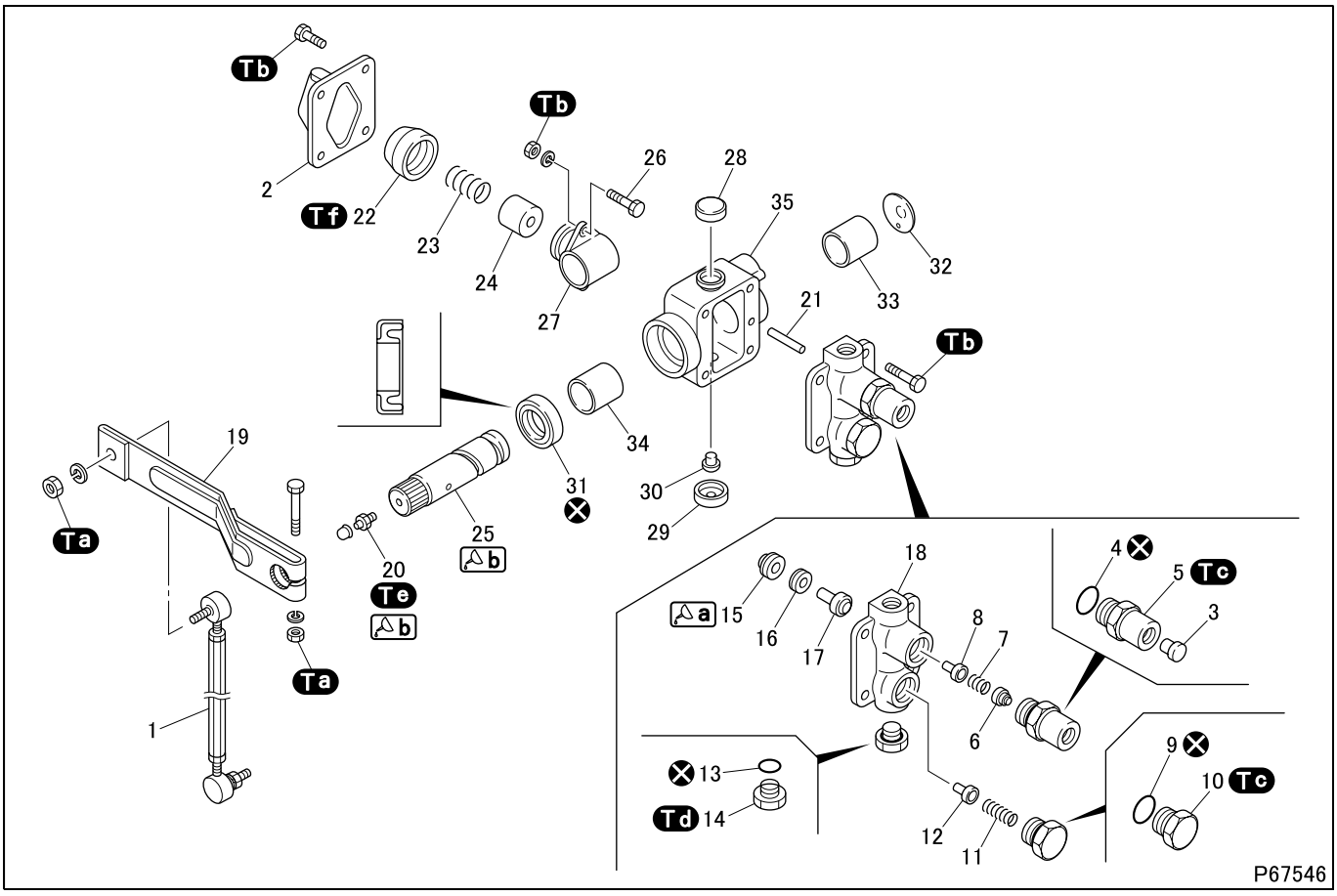

●Disassembly sequence

1 Rod
2 Cover
3 Filter
4 O-ring
5 Joint
6 Seal
7 Spring
8 Seal
9 O-ring
10 Screw plug
11 Spring
12 Seal
13 O-ring
14 Plug
15 Diaphragm nut
16 Washer
17 Diaphragm
18 Valve body
19 Lever
20 Grease nipple
21 Spring pin
22 Plug
23 Spring
24 Piston
25 Shaft
26 Adjuster
27 Rocker body
28 Cover
29 Cover
30 Filter
31 Oil seal
32 Plug
33 Bushing
34 Bushing
35 Actuator body

⊗: Non-reusable part

●Assembly sequence

Follow the disassembly sequence in reverse.

Repair kit: Leveling valve kit

Service standards (Unit: mm {in.})

Location	Maintenance item	Standard value	Limit	Remedy
17	Projecting length of diaphragm (stem) when specified air pressure of 590 kPa {174.3 in.Hg, 6 kgf/cm^2} is applied to the inlet side	1.25 ± 0.3 {0.049 ± 0.012}	–	Adjust
19	Dead zone at lever end hole (range where air does not flow in nor out)	8 ± 1 {0.31 ± 0.039}	–	Adjust

Tightening torque (Unit: N·m {ft.lbs, kgf·m})

Mark	Parts to be tightened	Tightening torque	Remarks
Ta	Nut (rod mounting)	12 to 15 {8.9 to 11, 1.2 to 1.6}	–
	Nut (lever mounting)		
Tb	Nut (adjuster mounting)	5.5 to 7.3 {4.1 to 5.4, 0.55 to 0.75}	–
	Bolt (cover mounting)		
	Bolt (valve body mounting)		
Tc	Joint	20 to 29 {15 to 21, 2 to 3}	–
	Screw plug		
Td	Plug	16 to 19 {12 to 15, 1.6 to 2.0}	–
Te	Grease nipple	1.5 to 2.0 {1.1 to 1.5, 0.15 to 0.20}	–
Tf	Plug	10 to 15 {7.4 to 11.0, 1.0 to 1.5}	–

Lubricant and/or sealant

Mark	Points of application	Specified lubricant and/or sealant	Quantity
a	Threads of nut	Cemedine No. 575	As required
b	Grease nipple	Multipurpose grease [NLGI No. 2 (Li soap)]	As required
	Periphery of shaft		

◆Installation procedure◆

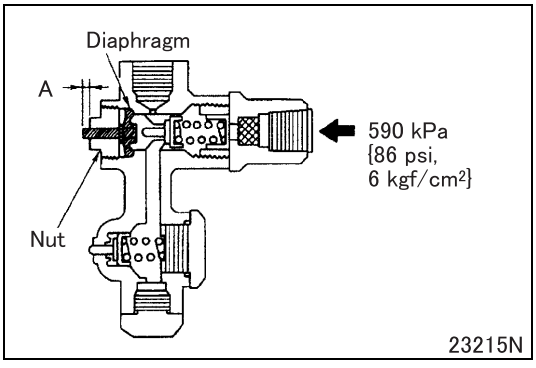

■ Installation: Diaphragm

- Install diaphragm nut such that the projection length A of diaphragm (stem) meets the standard value when the specified air pressure of 590 kPa {86 psi, 6 kgf/cm^2} is applied to the inlet side.

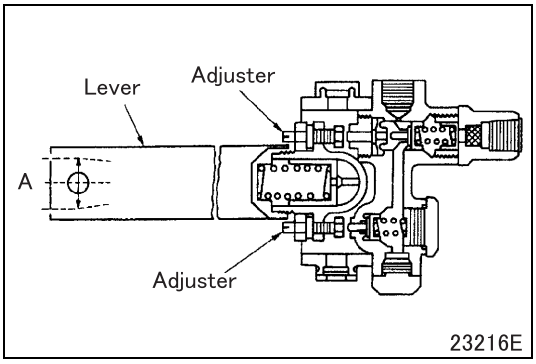

■ Adjustment: Dead zone at the lever end

- Adjust dead zone A (lever end hole moving range where no air flow in nor out the valve) for the standard value, using adjuster.

AIR SPRING

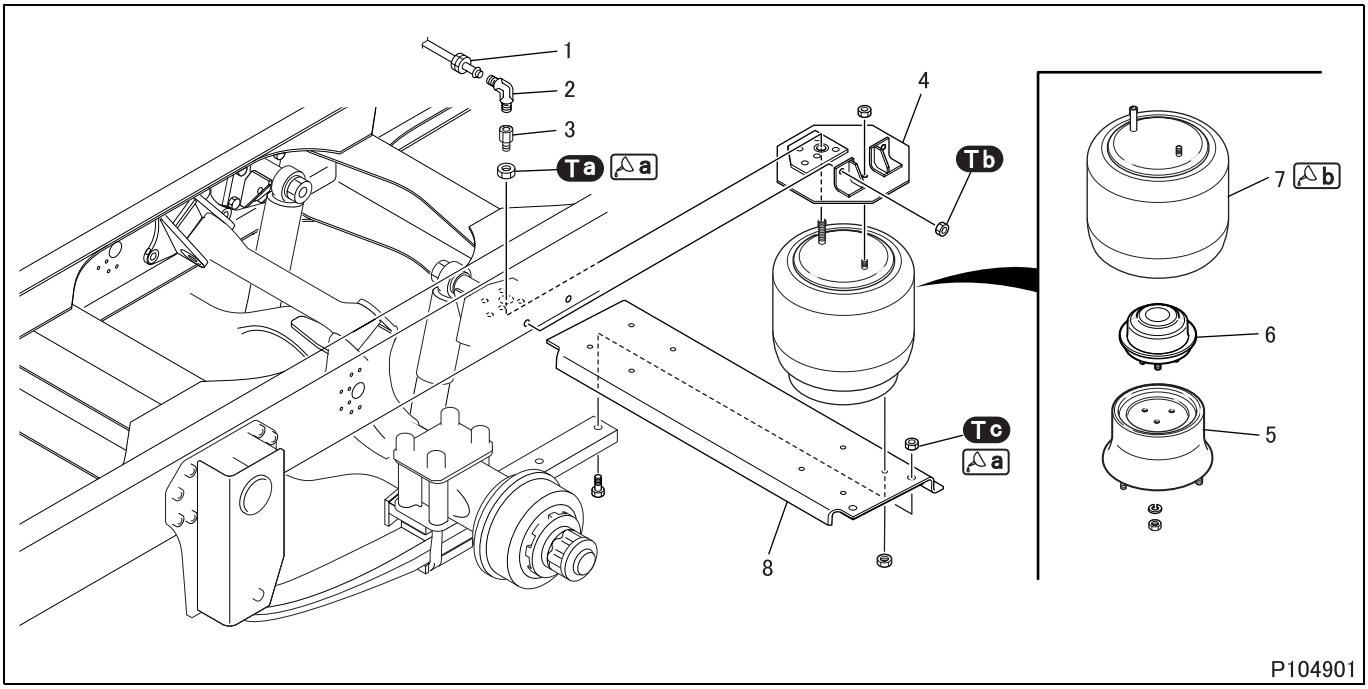

● **Removal sequence**

1 Air pipe
2 Connector
3 Connector
4 Air spring bracket
5 Piston
6 Bump stopper
7 Diaphragm
8 Cross beam

● **Installation sequence**

Follow the removal sequence in reverse.

Tightening torque (Unit: N·m {ft.lbs, kgf·m})

Mark	Parts to be tightened	Tightening torque	Remarks
Ta	Nut (air spring and air spring bracket mounting)	160 to 220 {120 to 160, 16.3 to 22.4}	–
Tb	Nut (air spring bracket mounting)	78 to 110 {59 to 81, 8 to 11}	–
Tc	Nut (cross beam mounting)	260 to 350 {190 to 260, 26.5 to 35.7}	–

Lubricant and/or sealant

Mark	Points of application	Specified lubricant and/or sealant	Quantity
a	Nut thread	Chassis grease [NLGI No. 1 (Li soap)]	As required
b	Joint of diaphragm with bump stopper	Tire cream	As required

◆Work before removal◆

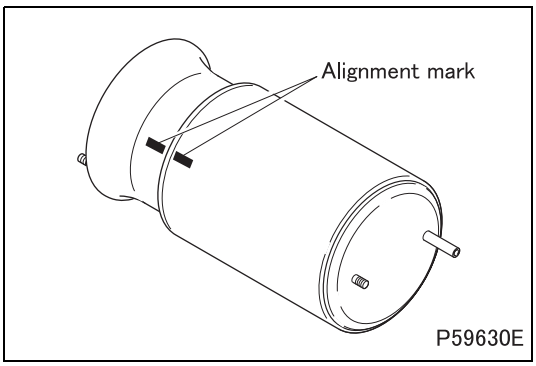

■ **Alignment mark: Diaphragm and piston**

◆Removal procedure◆

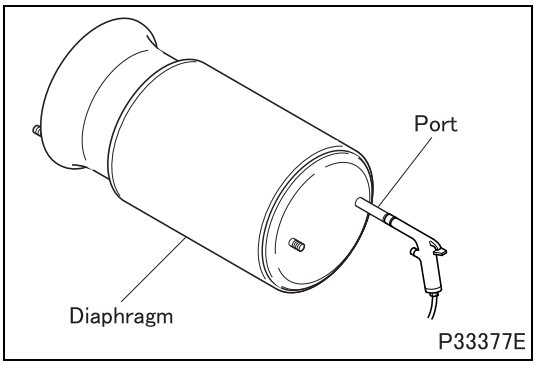

■ **Removal: Diaphragm**

- Inject air from the inlet port to expand the diaphragm.
- While keeping this condition, remove the diaphragm which is caught between piston and bump stopper.

◆Installation procedure◆

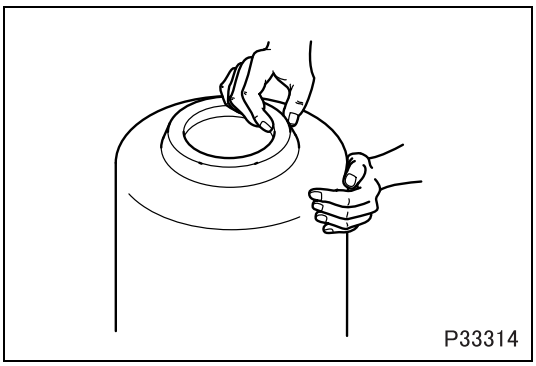

■ **Installation: Diaphragm**

- Before installing, apply tire cream to the diaphragm-to-bump stopper joint.

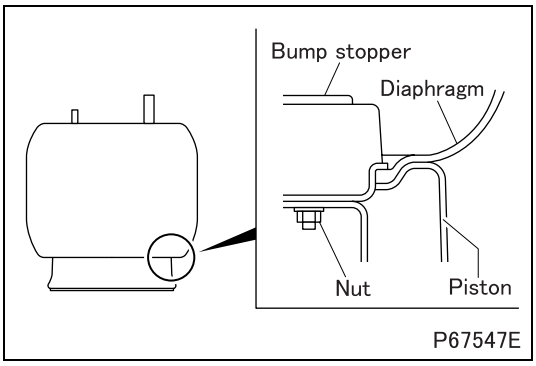

- Pull together bump stopper and diaphragm making sure they are in close contact, then install piston and secure it with nut.

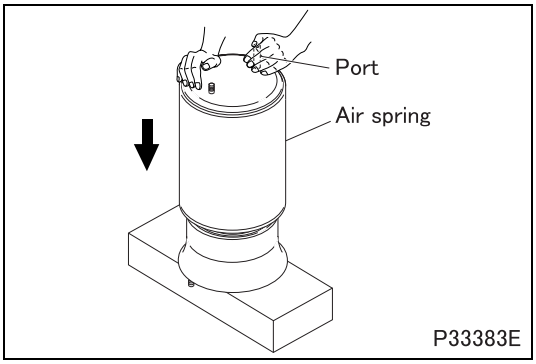

■ **Installation: Air spring**

- Holding the air spring body erect, apply your hand over the port.
- While blocking the port to prevent the diaphragm from being damaged, press the air spring with air shut in.
- Gradually release air from the port to contract the diaphragm to a height at which the air spring will be installed to the vehicle.

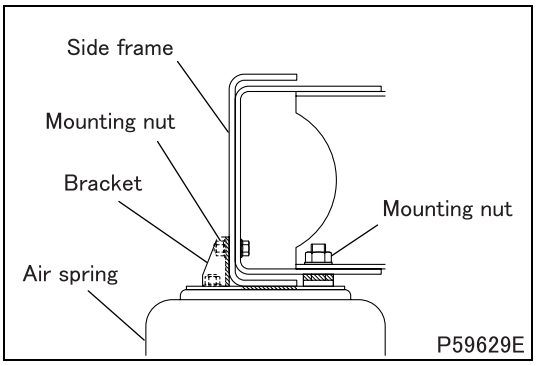

■ **Installation: Air spring bracket**

- Tighten the mounting nut to the specified torque while attaching the air spring bracket closely to the side frame mounting surface (diagonally shaded area) as shown in the drawing.

M E M O

SHOCK ABSORBER

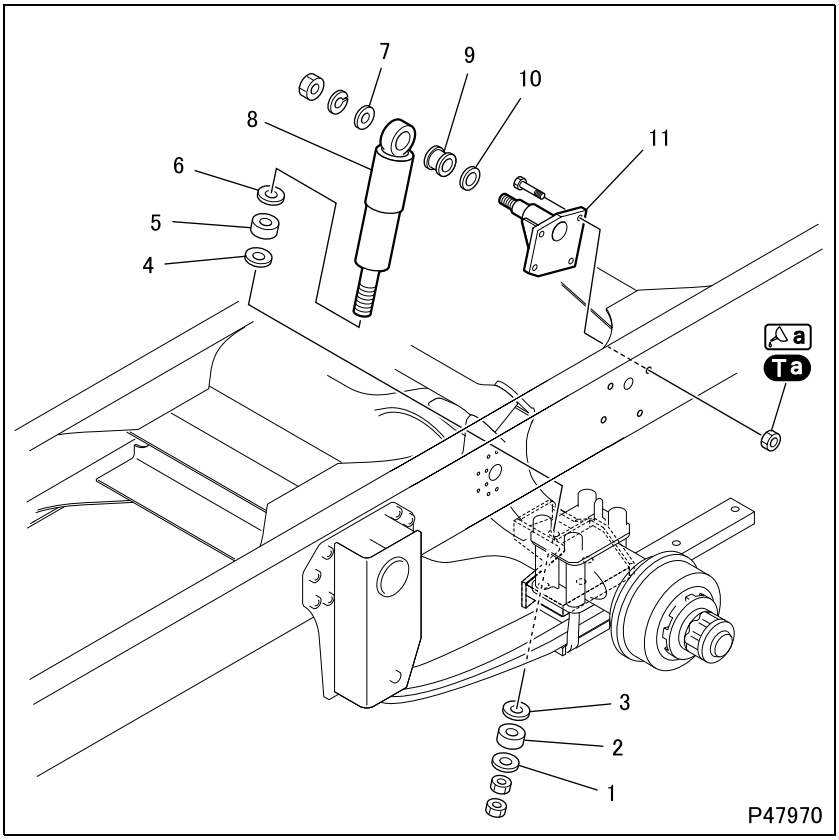

●Removal sequence

1 Washer A
2 Rubber bushing
3 Centering washer
4 Centering washer
5 Rubber bushing
6 Washer C
7 Washer B
8 Shock absorber
9 Rubber bushing
10 Washer B
11 Shock absorber upper bracket

CAUTION ⚠

- **Before removing the shock absorber, be sure to remove the nut that holds cross beam and air spring to prevent the air spring from being damaged.**

●Installation sequence

Follow the removal sequence in reverse.

Tightening torque (Unit: N·m {ft.lbs, kgf·m})

Mark	Parts to be tightened	Tightening torque	Remarks
Ta	Nut (shock absorber upper bracket mounting)	160 to 220 {120 to 160, 16.3 to 22.4}	Wet

Lubricant and/or sealant

Mark	Points of application	Specified lubricant and/or sealant	Quantity
a	Nut thread	Chassis grease [NLGI No. 1 (Li soap)]	As required

◆Installation procedure◆

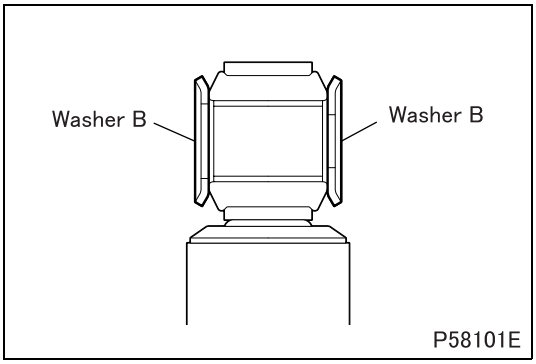

■ Installation: Washer B

- Install the washer B in the illustrated direction.

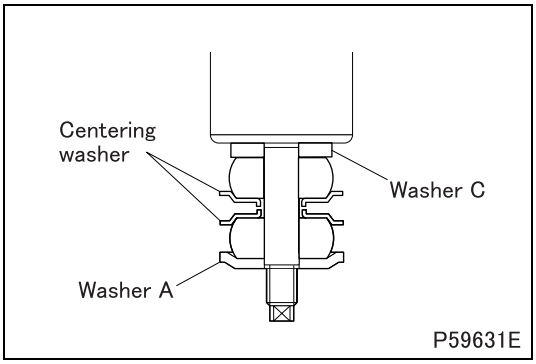

■ **Installation: Washer A and centering washer**

- Install the washer A and centering washer in the illustrated direction.

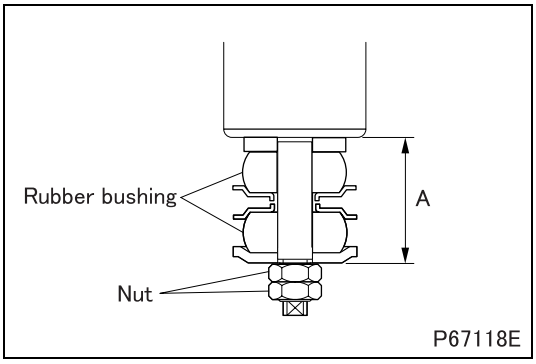

■ **Installation: Rubber bushing**

- Tighten the nut for the dimension A as indicated below.
  A: 68 mm {2.68 in.}

LEAF SPRING

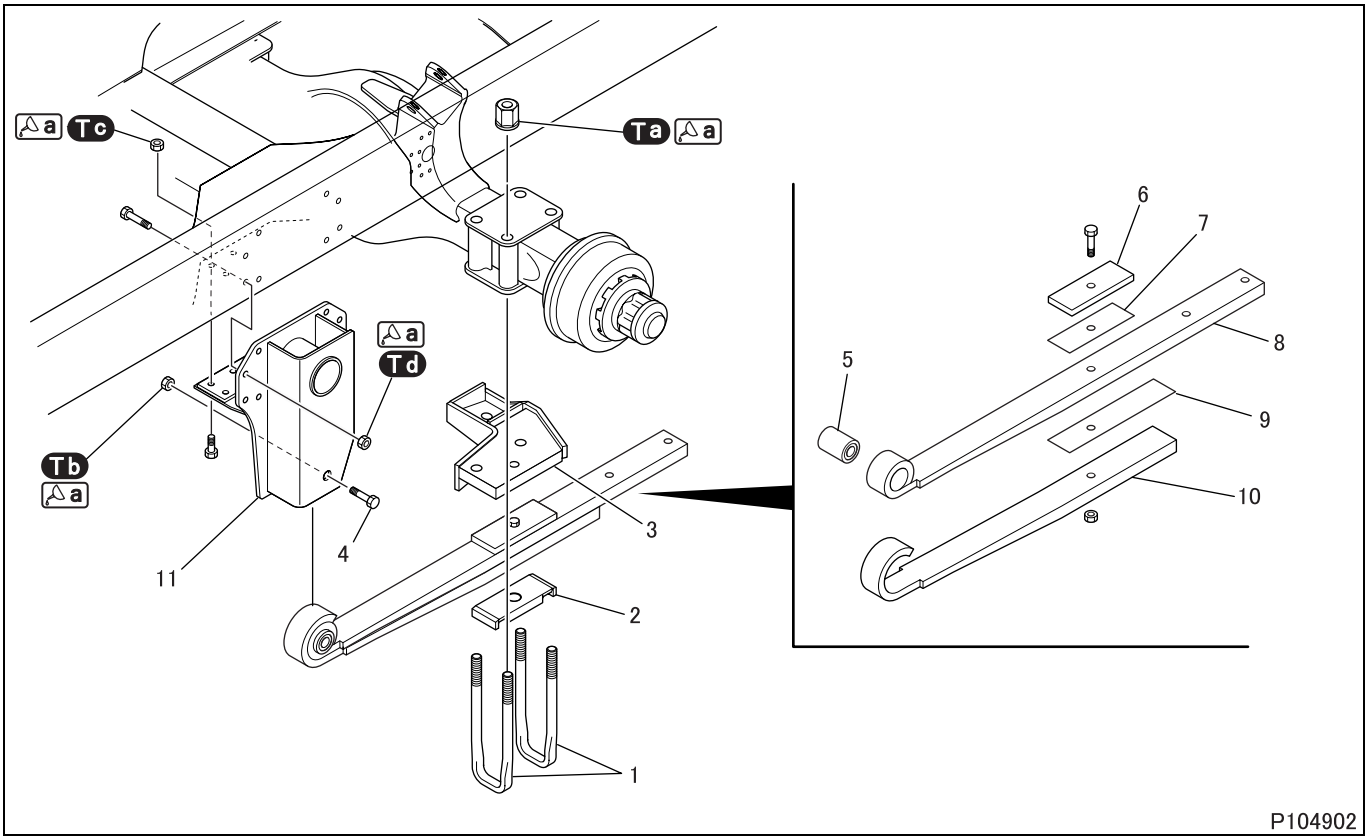

●Disassembly sequence

1 U-bolt
2 Spring pad
3 Shock absorber lower bracket
4 Leaf spring bolt
5 Bushing
6 Caster shim
7 Center spacer
8 Leaf spring (No. 1)
9 Center spacer
10 Leaf spring (No. 2)
11 Leaf spring bracket

NOTE

- **Do not disassemble the leaf spring unless there is an abnormality.**

●Assembly sequence

Follow the disassembly sequence in reverse.

CAUTION ⚠

- **Do not fully tighten leaf spring bolts before adjusting the height of air spring. Otherwise, the bushings for the eyes of leaf spring may be twisted.**

Service standards (Unit: mm {in.})

Location	Maintenance item	Standard value	Limit	Remedy
4, 5	Clearance between leaf spring bolts and leaf spring bushings	0 to 0.03 {0 to 0.0012}	–	Replace

Tightening torque (Unit: N·m {ft.lbs, kgf·m})

Mark	Parts to be tightened	Tightening torque	Remarks
Ta	Nut (U-bolt mounting)	740 to 830 {545 to 610, 75 to 85}	Wet
Tb	Nut (leaf spring mounting)	590 to 790 {435 to 580, 60 to 80.5}	Wet
Tc	Nut (leaf spring bracket mounting)	160 to 220 {120 to 160, 16.3 to 22.4}	Wet
Td	Nut (leaf spring bracket mounting)	260 to 350 {190 to 260, 27 to 36}	Wet

Lubricant and/or sealant

Mark	Points of application	Specified lubricant and/or sealant	Quantity
a	Thread area of nuts	Chassis grease [NLGI No. 1 (Li soap)]	As required

Special tools (Unit: mm {in.})

Mark	Tool name and shape	Part No.	Application
a	Socket wrench A: Width across flats 30 {1.18} B: Width across flats 36 {1.42} 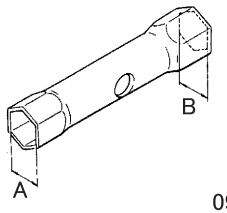 09890	03703-83000	Removal and installation of U-bolts

◆Work before removal◆

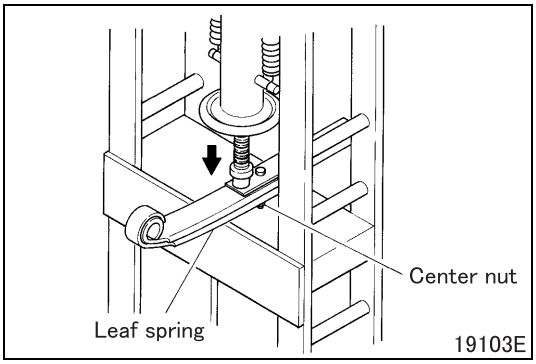

19103E

■ Compression: Leaf spring

- Using a press, compress the leaf spring as illuminated for subsequent operations.

◆Removal procedure◆

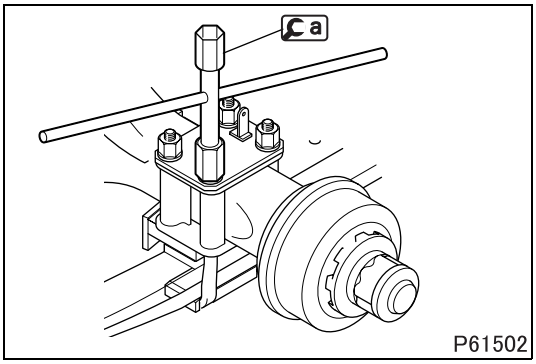

P61502

■ Removal: U-bolt

◆Installation procedure◆

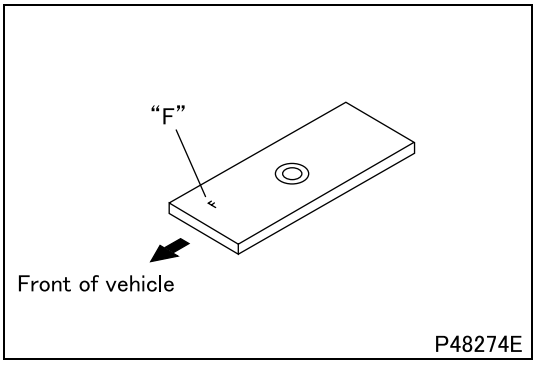

P48274E

■ Installation: Caster shim

- Install the caster shim so that the mark “F” on the shim turns to the front of vehicle.

LATERAL ROD

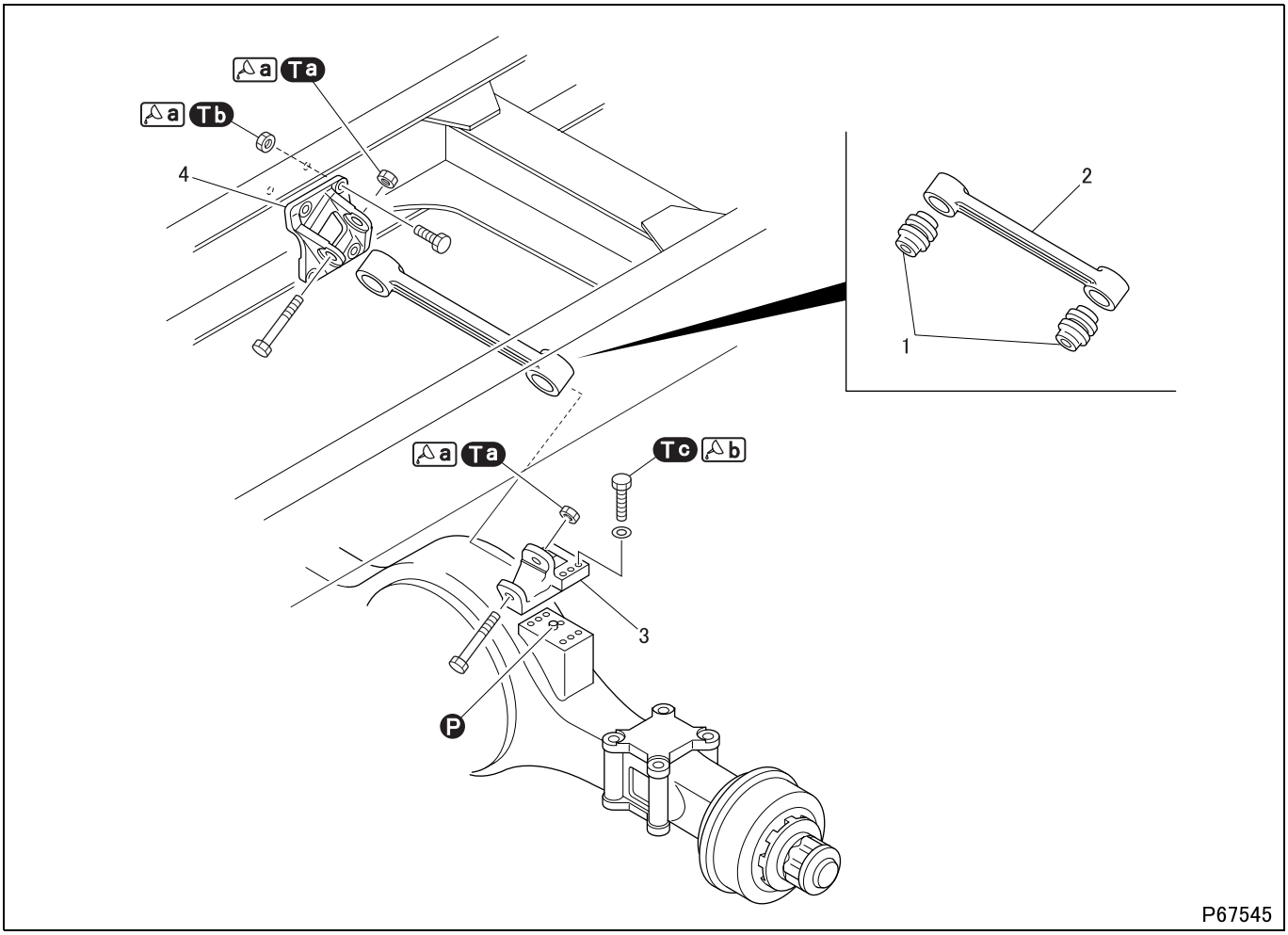

●Removal sequence

1 Lateral rod bushing
2 Lateral rod
3 Lateral rod bracket
4 Lateral rod bracket
Ⓟ: Locating pin

●Installation sequence

Follow the removal sequence in reverse.

CAUTION ⚠

- **Do not fully tighten lateral rod nuts before adjusting the height of air spring. Otherwise, the bushings for the eyes of lateral rod may be twisted.**

Tightening torque (Unit: N·m {ft.lbs, kgf·m})

Mark	Parts to be tightened	Tightening torque	Remarks
Ta	Nut (lateral rod mounting)	500 to 680 {370 to 500, 51 to 69}	Wet
Tb	Nut (lateral rod bracket mounting)	160 to 220 {120 to 160, 16 to 22}	Wet
Tc	Bolt (lateral rod bracket mounting)	206 ± 31 {150 ± 23, 21 ± 3.15}	–

Lubricant and/or sealant

Mark	Points of application	Specified lubricant and/or sealant	Quantity
a	Thread area of nuts	Chassis grease [NLGI No. 1 (Li soap)]	As required
b	Thread area of bolts	ThreeBond 2430 or 2440	As required

Special tools (Unit: mm {in.})

Mark	Tool name and shape	Part No.	Application
a	Tool A (radius rod rest) 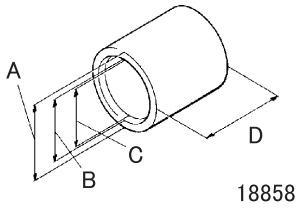 18858 A: φ101.6 {4.00}; B: φ82 {3.23}; C: φ79 {3.11}; D: 111 {4.37}	MC019916	Lateral rod bushing removal and installation
b	Tool B (rod bushing remover) 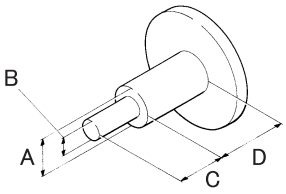 19096 A: φ50 {1.97}; B: φ23.5 {0.93}; C: 60 {2.36}; D: 75 {2.95}	MC019917	
c	Shackle pin puller 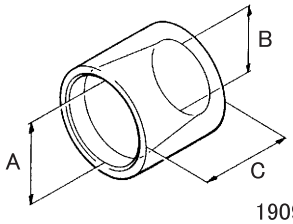 19097 A: φ84.5 {3.33}; B: φ69 {2.72}; C: 90 {3.54}	MC019918	Lateral rod bushing installation

LATERAL ROD

◆Removal procedure◆

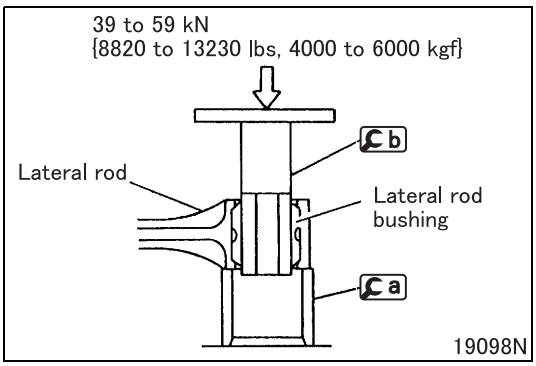

■ **Removal: Lateral rod bushing**

◆Installation procedure◆

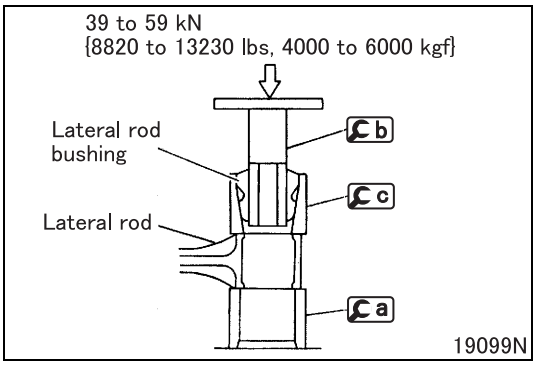

■ **Installation: Lateral rod bushing**

Group 35A

Brake

<AIR-OVER HYDRAULIC BRAKE>

Table of Contents

Back

Home

MITSUBISHI FUSO TRUCK OF AMERICA, Inc.

Pub.No.TWME0709-35A

INDEX

SPECIFICATIONS 35A-2

STRUCTURE AND OPERATION
1. Brake System 35A-4
2. Air Compressor 35A-6
3. Air Dryer 35A-7
4. Dual Brake Valve 35A-10
5. Brake Booster 35A-16
6. Fluid Tank 35A-18
7. Front Drum Brake 35A-19
8. Rear Drum Brake 35A-22
9. Supply Valve 35A-23
10. Quick Release Valve 35A-23

TROUBLESHOOTING 35A-24

ON-VEHICLE INSPECTION AND ADJUSTMENT
1. Exhaust Noise from Brake Valve 35A-27
2. Air Pressure Build-up 35A-27
3. Replacement of Brake Fluid 35A-28
4. Air Bleeding of Brake System 35A-30
5. Inspection and Adjustment of Brake Pedal Free Play 35A-33
6. Inspection of Drum Brake Lining Thickness 35A-33
7. Initial Adjustment of Clearance between Brake Drum and Shoe .. 35A-34
8. Maintenance and Inspection of Air Dryer 35A-36
9. Inspection and Adjustment of Air Dryer's Air Pressure Governor .. 35A-37

HANDLING OF NYLON TUBE FOR AIR LINE
<COMPRESSION TYPE>..... 35A-40
<TUBE IDENTIFICATION COLORS>..... 35A-42

HANDLING OF CONNECTOR 35A-43

AIR COMPRESSOR 35A-44

AIR DRYER 35A-48

BRAKE PEDAL 35A-52

DUAL BRAKE VALVE 35A-54

BRAKE BOOSTER 35A-60

FLUID TANK 35A-66

FRONT WHEEL BRAKE 35A-68

REAR WHEEL BRAKE 35A-76

CHECK VALVE 35A-84

SAFETY VALVE 35A-85

SUPPLY VALVE 35A-86

QUICK RELEASE VALVE 35A-88

SPECIFICATIONS

Air compressor

Item		Specifications
Type		Water-cooled 1 cylinder
Cylinder bore × stroke	mm {in.}	ϕ95 × 45 {3.74 × 1.77}
Cylinder displacement	cm^3 {cu.in.}	319 {19.5}
Manufacturer		Sanwa Seiki

Air dryer

Item		Specifications
Model		DU-3
Heater capacity	V-W	12-70
Thermostat operating temperature °C {°F}	ON	4 ± 4 {39.2 ± 7.2}
	OFF	16 ± 4 {61 ± 7.2}
Purge chamber capacity	dm^3 {qts}	1.6 {1.7}
Required time for recycling desiccant	sec.	50
Air pressure governor operating pressure	kPa {psi, kgf/cm^2}	760 to 890 {110 to 130, 7.7 to 9.1}
Manufacturer		Nabtesco

Air tank

Item		Specifications
Capacity	L {qts}	15, 30 (22+8) {16, 31.7 (23+8.5)}

Front drum brake

Item		Specifications
Brake type		2-leading type (with automatic adjuster)
Wheel cylinder inner diameter	mm {in.}	ϕ36.51 {1.44}
Brake drum inner diameter	mm {in.}	ϕ320 {12.6}
Brake lining width × thickness	mm {in.}	120 × 12 {4.72 × 0.47}

Rear drum brake

Item		Specifications
Brake type		Dual 2-leading type (with automatic adjuster)
Wheel cylinder inner diameter		ϕ38.10 {1.50}
Brake drum inner diameter	mm {in.}	ϕ320 {12.6}
Brake lining width × thickness	mm {in.}	140 × 12 {5.51 × 0.47}

Brake booster

Item		Specifications
Power cylinder	Inner diameter × stroke mm {in.}	ϕ114.3 × 98 {4.50 × 3.86}
Hydraulic cylinder	Inner diameter × stroke mm {in.}	ϕ22.2 × 95 {0.87 × 3.74}
Operating starting pressure	kPa {psi, kgf/cm^2}	24 ± 9.8 {3.5 ± 1.4, 0.24 ± 0.10}
Residual pressure	kPa {psi, kgf/cm^2}	80 to 130 {11.6 to 18.9, 0.82 to 1.3}
Manufacturer		Knorr-Bremse Japan

M E M O

1. Brake System

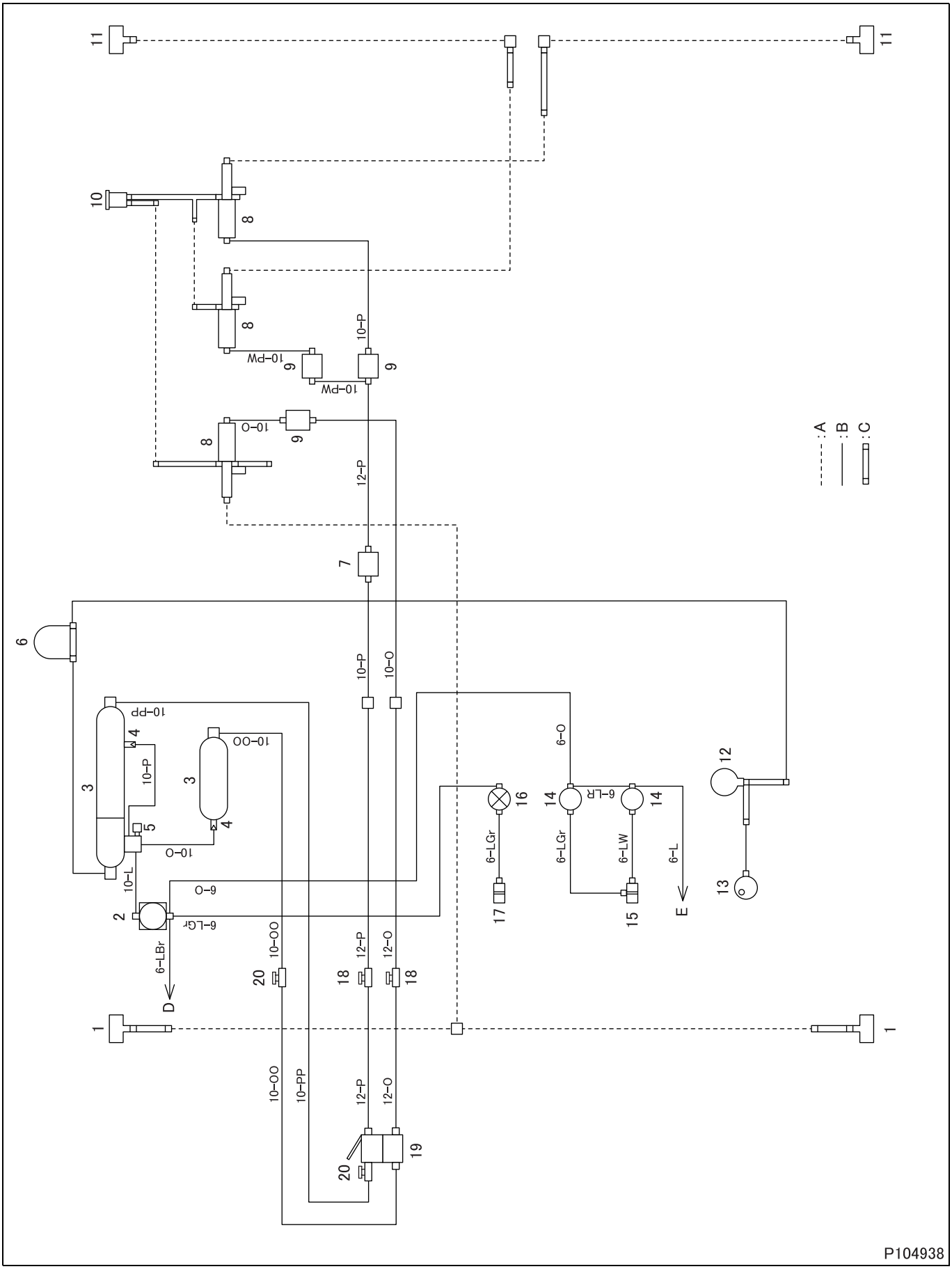

1 Front wheel cylinder
2 Supply valve
3 Air tank
4 Check valve
5 Safety valve
6 Air dryer
7 Quick release valve
8 Brake booster
9 Control valve
10 Brake fluid tank
11 Rear wheel cylinder
12 Air compressor
13 Air cleaner
14 3-way magnetic valve
15 Exhaust shutter
16 Reducing valve
17 Waste gate magnetic valve
18 Stop lamp switch
19 Dual brake valve
20 Air pressure sensor

A : Fluid line
B : Air line
C : Hose
D : To air suspension seat <option>
E : To air horn

- The brake system is an air over hydraulic, all wheel brake type consisting of separate front and rear systems.
- The servo system is fitted with brake boosters.
- An exhaust brake system of the exhaust pipe opening and closing valve type, is fitted as a sub-brake system.

2. Air Compressor

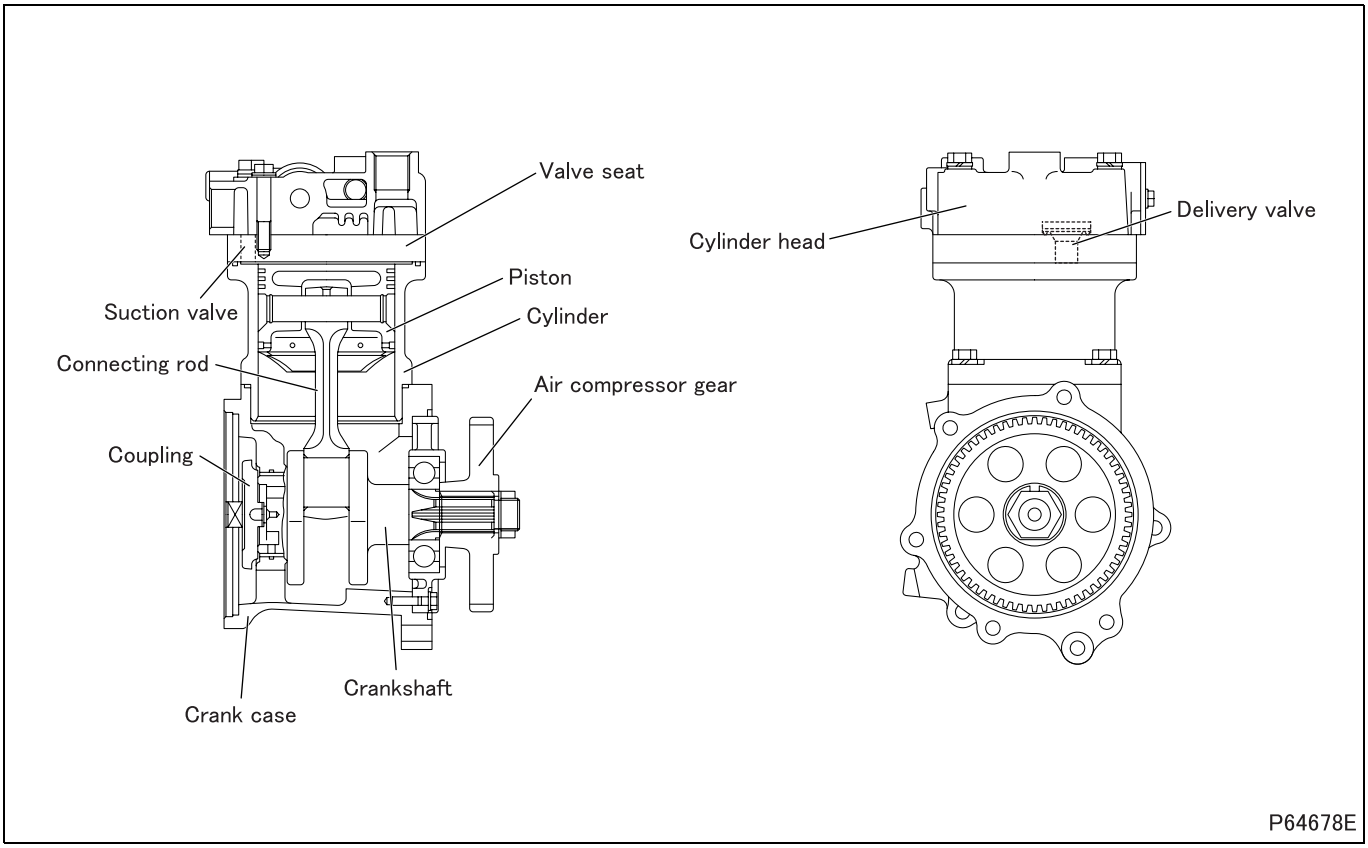

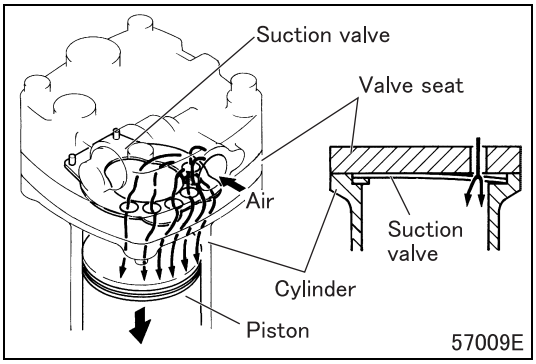

2.1 During suction

- When the piston goes down during the suction stroke cycle, the vacuum causes the suction valve to open, allowing air to be drawn into the cylinder.

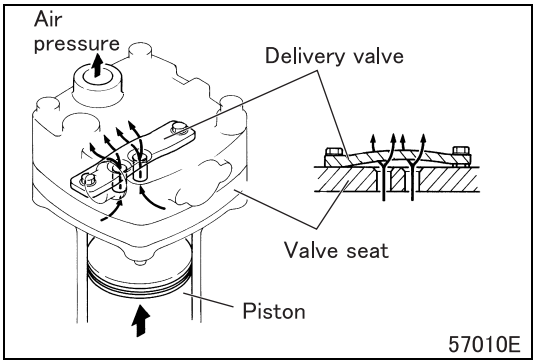

2.2 During compression and delivery

- When the piston goes up during the compression and delivery stroke cycle, the suction valve is closed by air pressure.
- Air pressure compressed by the piston forces open the delivery valve and makes its way to the air dryer and air tank.

3. Air Dryer

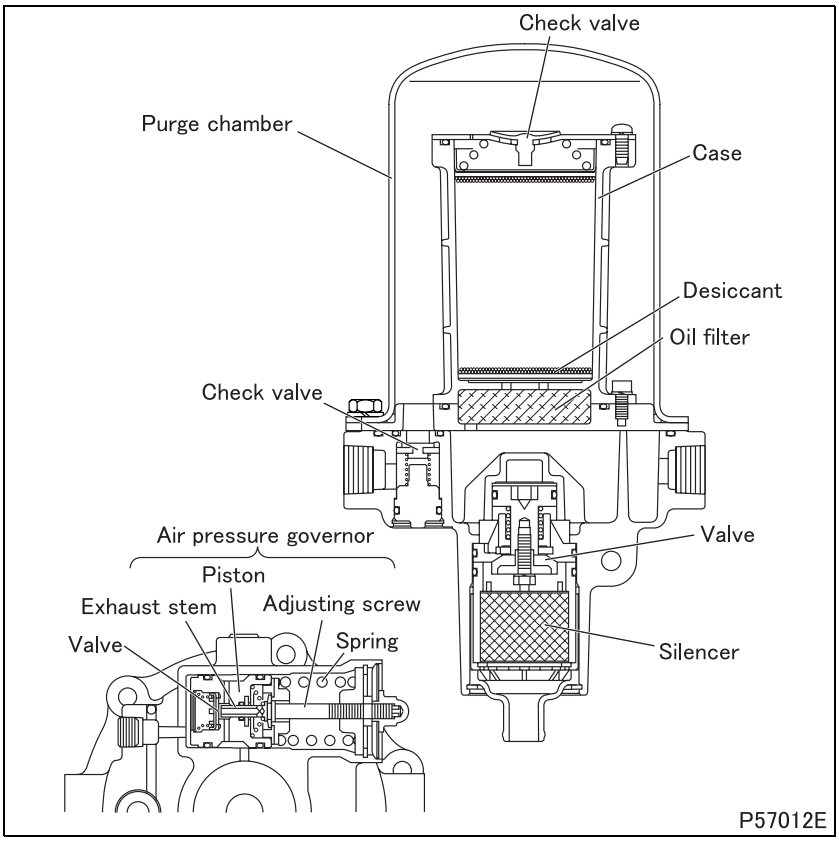

- The air dryer protects brake components by removing moisture and oil from air that has been compressed by the air compressor.
- The air dryer incorporates an air pressure governor, which keeps the pressure in the air tank constant by releasing air compressed by the air compressor to the atmosphere when the pressure in the air tank makes such operation necessary.

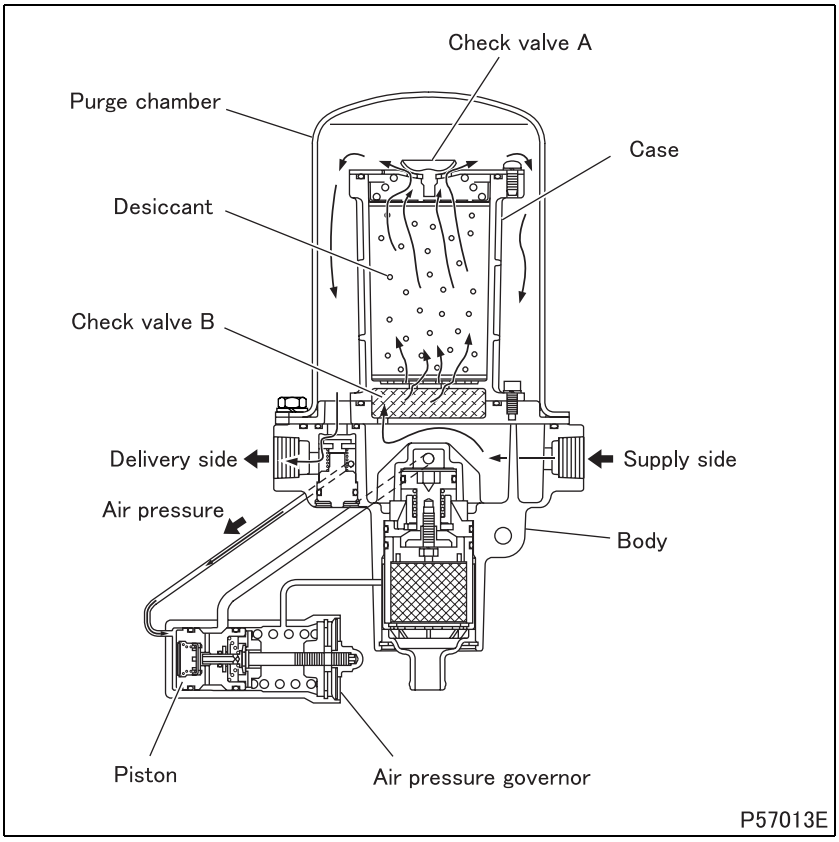

3.1 Drying action

- While the air tank is being charged, air from the air compressor enters the air dryer's supply side. Moisture and oil are separated from the air inside the body and collect in the bottom. The air then passes through the oil filter, which removes smaller oil droplets and particles of dust. The air then flows into the case, where the desiccant removes any remaining moisture.
- As the air flows upward in the case, it makes contact with increasingly dry desiccant and thus contains less and less moisture. When the air reaches the top of the case, it is dry. It flows through the check valve A, purge chamber, and check valve B, and it is then supplied from the delivery side to the air tank. Air pressure also acts upon the piston in the air pressure governor.

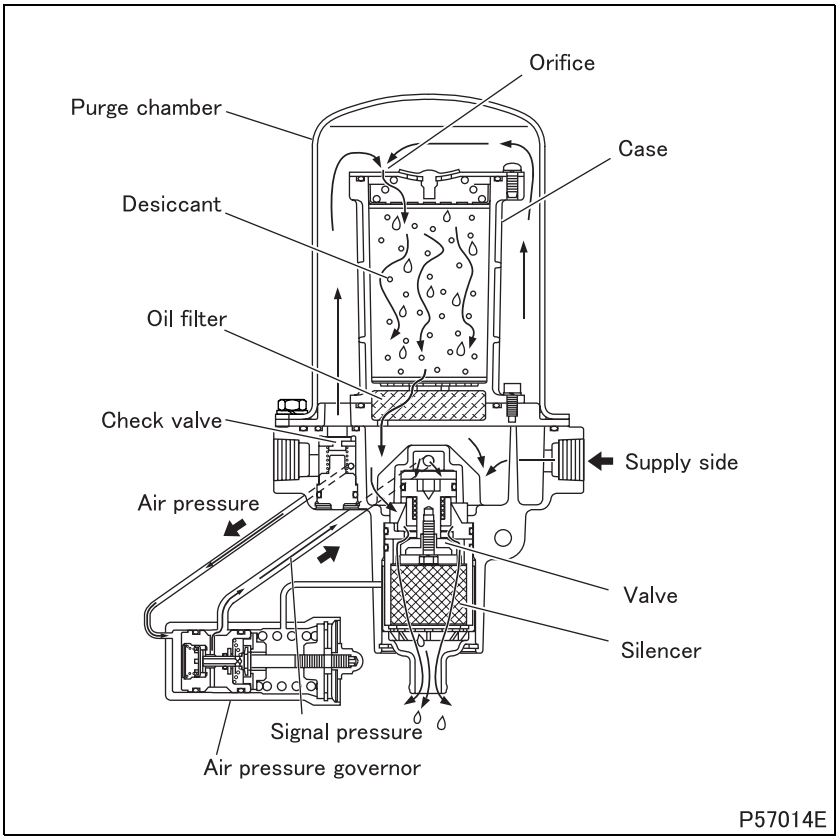

3.2 Regeneration of desiccant

- When the air pressure in the air tank reaches the upper threshold level, signal pressure from the air pressure governor causes the valve in the air dryer's control port to open. As a result, the pressure in the case cleans the oil filter and pushes the water and oil out into the atmosphere.
- Following the rapid drop in pressure, dry air in the purge chamber flows through the orifice, expands, and becomes super-dry. As this super-dry air flows backward through the case, it carries moisture from the desiccant out into the atmosphere, thereby completing the desiccant's regeneration.
- During the regeneration process, the check valve is closed. Thus, the signal pressure from the air pressure governor continues to act upon the control port and the valve remains open. Air from the air compressor thus flows through the valve, through the silencer, and out into the atmosphere.
- The regeneration process continues until air consumption causes the pressure in the air tank to decrease to the governor lower threshold level.

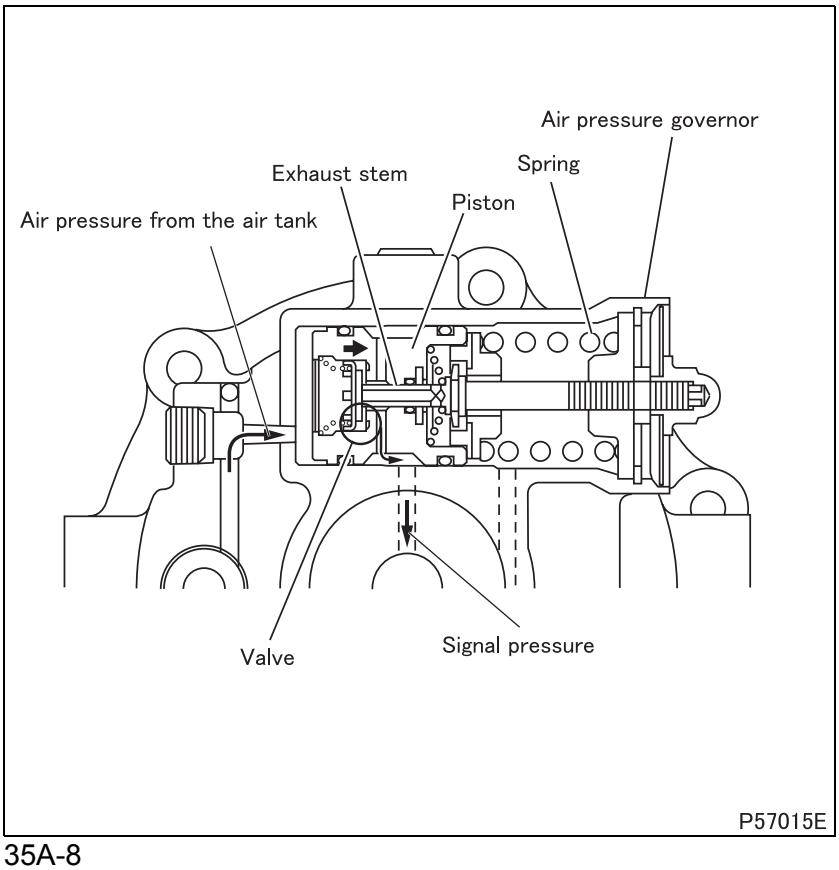

3.3 Operation when tank pressure reaches upper threshold level

- Air pressure from the air tank continuously acts upon the piston.
- When the tank pressure increases to such a level that it overcomes the spring, it pushes the piston upward such that the valve closes.
- When the tank pressure increases further and exceeds the upper threshold level, the piston is pushed upward further such that the exhaust stem opens the inlet valve. Air pressure from the air tank thus flows out of the air pressure governor as signal pressure, causing the valve to open. Regeneration of the air dryer's desiccant thus begins.

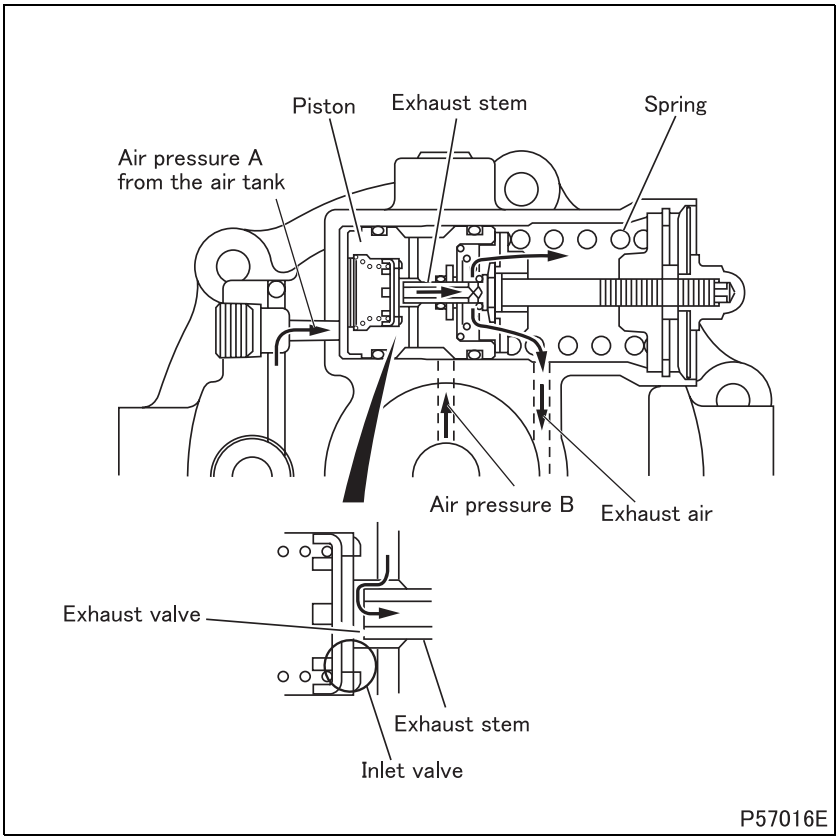

3.4 Operation when tank pressure reaches lower threshold level

- When the air pressure A from the air tank drops below the lower threshold level, the piston is pushed downward by the spring such that the inlet valve closes and the exhaust valve opens. As a result, air pressure flows through the exhaust stem and escapes to the atmosphere.

4. Dual Brake Valve

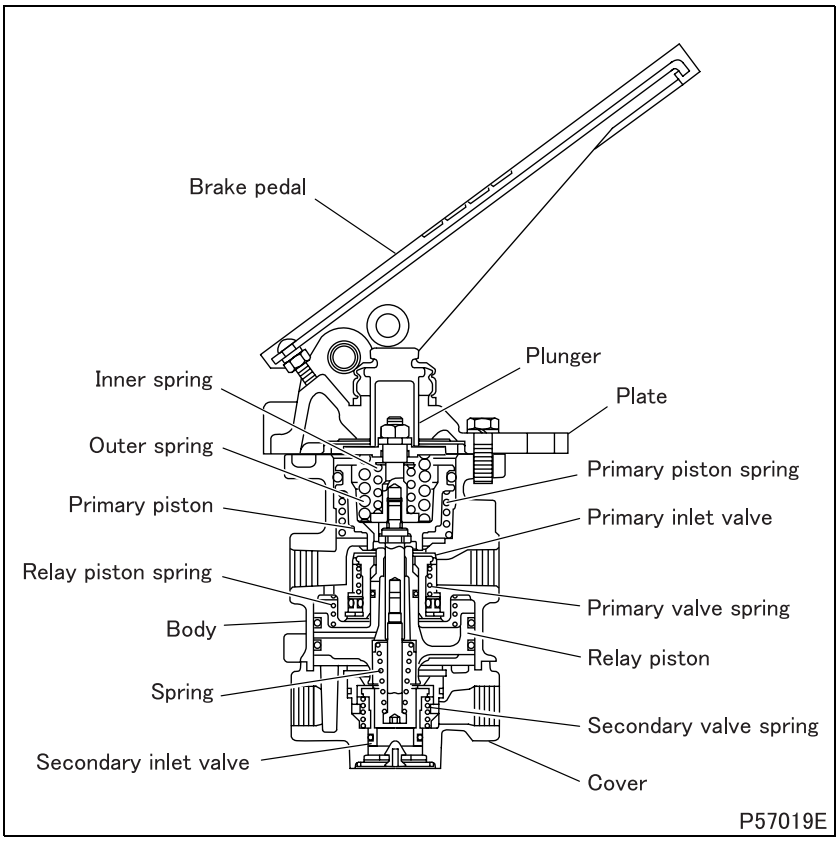

- The dual brake valve controls the braking force of the vehicle by feeding pressurized air to the brake booster in accordance with the brake pedal depression angle of brake pedal.

4.1 Normal operation

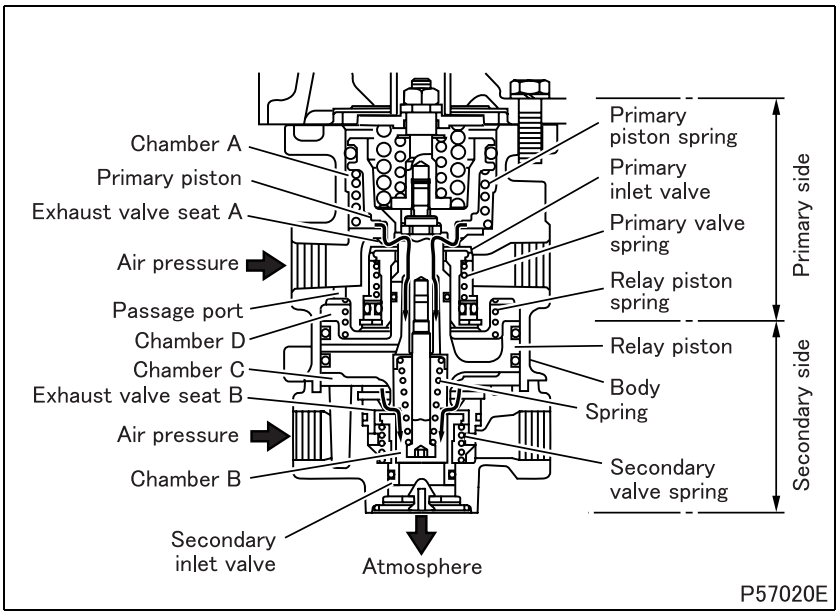

(1) When brake not operating

- The repercussive forces of primary valve springs, secondary valve spring seat primary inlet valve at primary side, and inlet valve at secondary side, on their respective seats. This shuts off air from the air tank to maintain airtightness.
- The repercussive force of primary piston spring raises primary piston to its upper position. Exhaust valve seat A opens and chamber A is open to atmosphere via chamber B.
- Since the repercussive forces of spring is stronger than the repercussive force of relay piston spring, relay piston is raised to its upper position and exhaust valve seat B is opened. This opens chamber C to atmosphere via chamber B.

  Chamber A at the primary side and chamber D at the upper part of relay piston at the secondary side are connected via passage port of body.

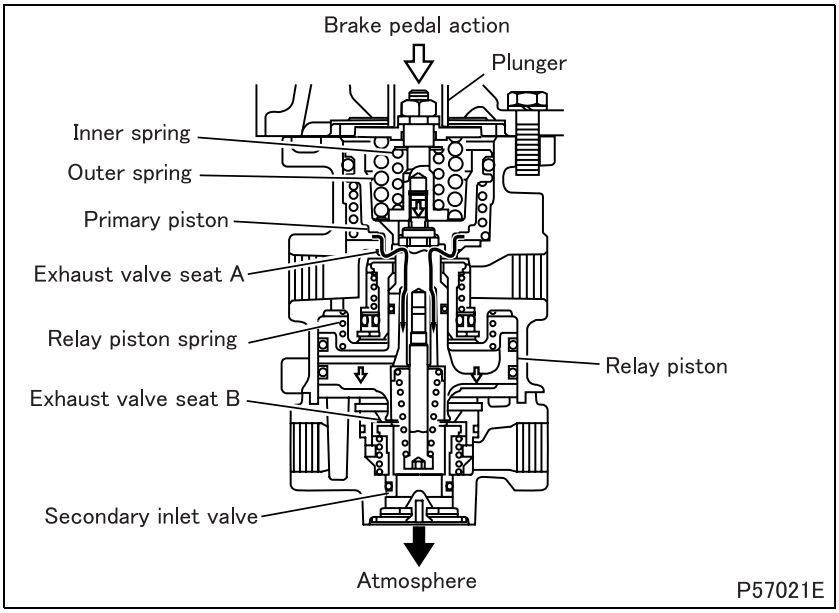

(2) When pressing brake pedal (before braking pressure is generated)

- Pressing the brake pedal (illustrated as pedal action), forces down primary piston via plunger.
- Forcing down primary piston changes the balance between the repercussive forces of inner spring and outer spring, and the repercussive force of relay piston spring, forcing down relay piston. This seats the relay piston on secondary inlet valve and closes exhaust valve seat B.
- This closes the secondary side exhaust passage; however, primary side exhaust valve seat A remains open. No braking pressure is generated at either primary or secondary sides.

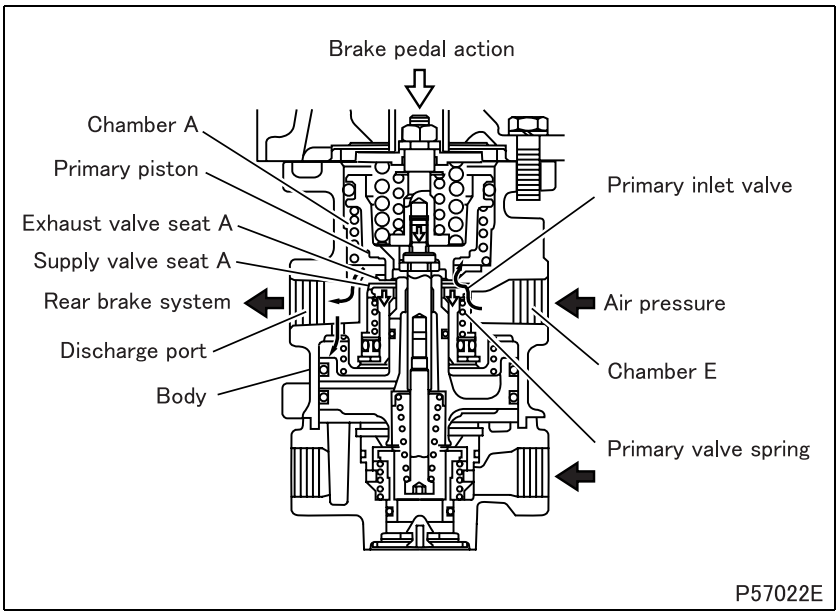

(3) When pressing brake pedal (braking pressure is generated)

(3.1) Primary side

- As the brake pedal is pressed further (illustrated as brake pedal action), primary piston is forced down until it is seated on primary inlet valve, closing exhaust valve seat A.
- Primary inlet valve is forced down, compressing primary valve spring, and supply valve seat A of body separates from the primary inlet valve. The air in chamber E flows into chamber A and is fed to rear brake system via discharge port as braking pressure.

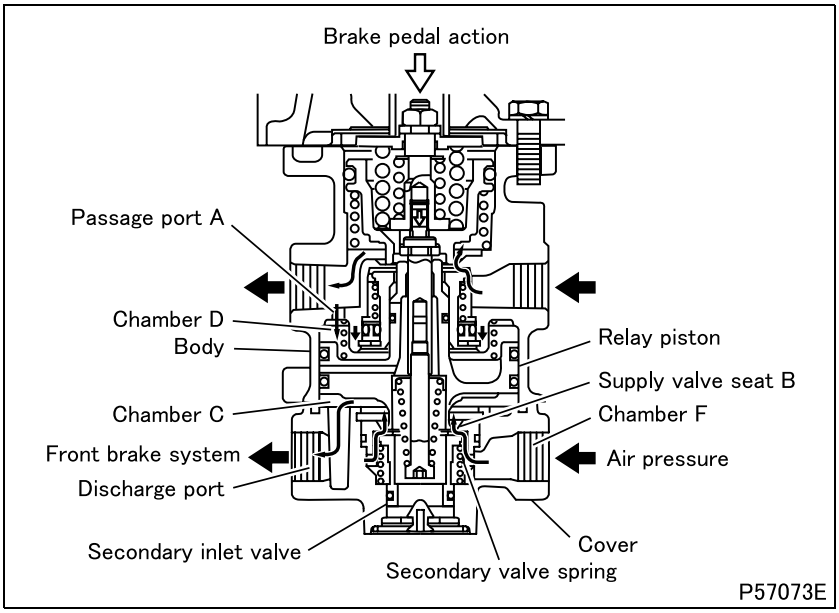

(3.2) Secondary side

- The air at the primary side flows into chamber D via passage port of body.
- The air fed into chamber D acts on the upper part of relay piston to force down the relay piston and compress secondary valve spring, forcing down secondary inlet valve.
- This separates supply valve seat B and secondary inlet valve of cover.
- The air in supply port chamber F flows into chamber C and is fed to front brake system via discharge port as braking pressure.

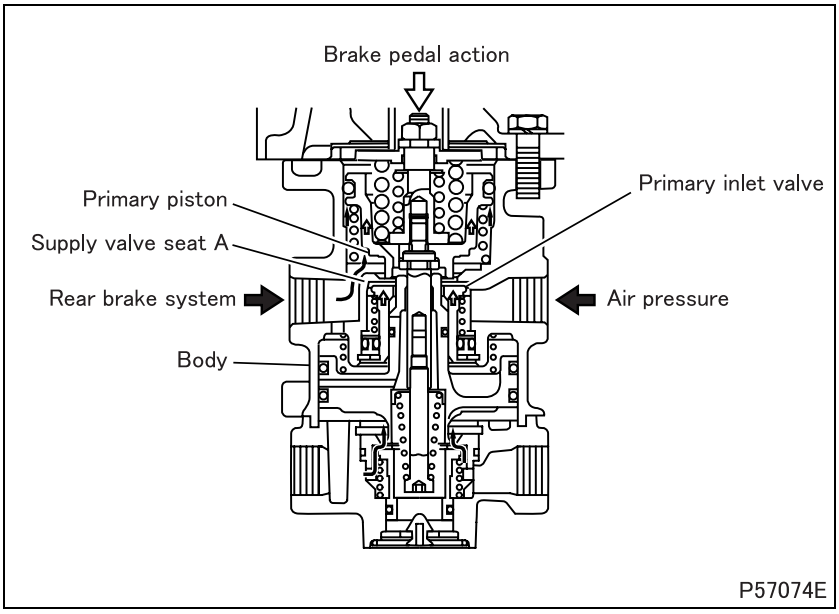

(4) Stabilization of braking pressure

- When the brake pedal remains pressed at the specified depression angle, the braking air pressure stabilizes at the pressure corresponding to the brake pedal depression angle.

(4.1) Primary side

- The braking air pressure fed under the bottom of primary piston raises the primary piston and primary inlet valve together in tandem.
- Primary inlet valve makes contact with supply valve seat A of body, then the supply of air from the air tank ceases and the increases in the braking air pressure stops. This stabilizes braking pressure for the rear brake system.

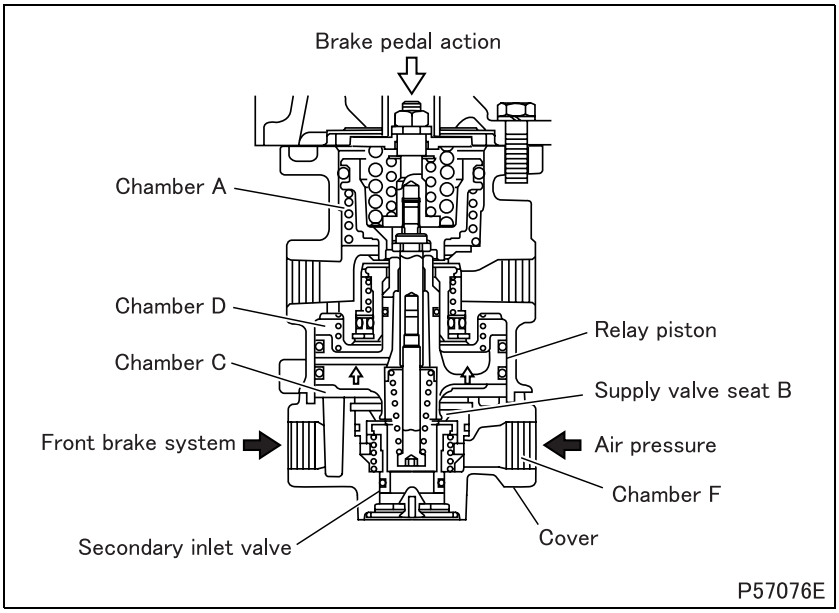

(4.2) Secondary side

- As the braking pressure (pressure in chamber C) for the front brake system balances the pressures in chambers A and D, the force raising relay piston disappears, and the relay piston rises in tandem with secondary inlet valve.
- Secondary inlet valve makes contact with supply valve seat B of cover, then the supply of air from supply port chamber F to chamber C ceases. This stabilizes brake pressure for the front system.

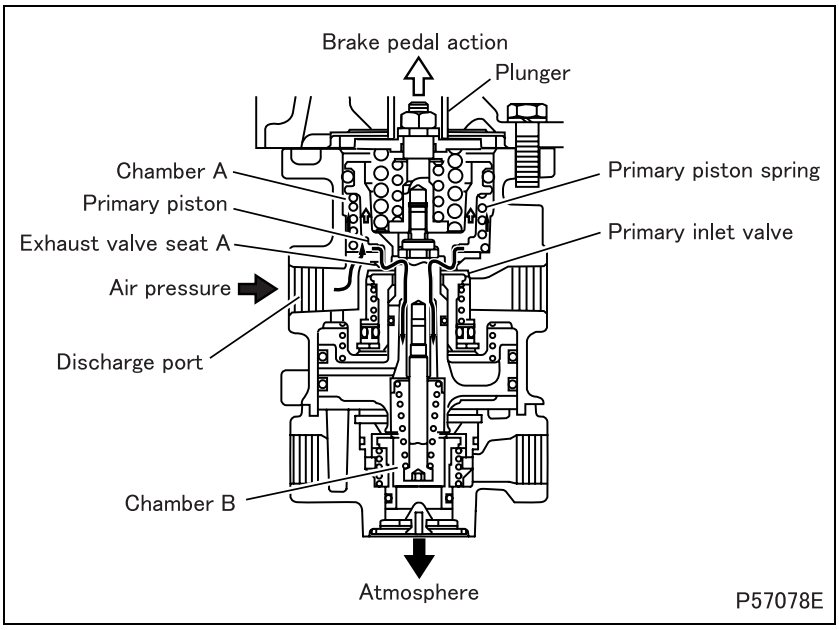

(5) Release of brake pressure

(5.1) Primary side

When the brake pedal is released (illustrated as brake pedal action), primary piston spring and air pressure at discharge port (pressure in chamber A) raise plunger and primary piston. Then, exhaust valve seat A at the lower end of the primary piston separates from primary inlet valve. The air pressure of the rear brake system flows through chamber A to be discharged from exhaust passage chamber B into atmosphere.

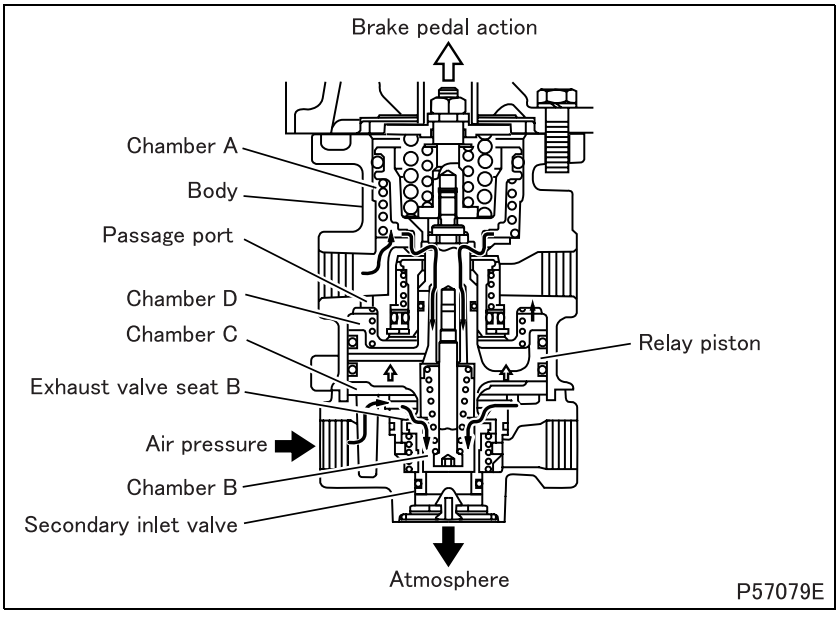

(5.2) Secondary side

- As the air pressure in the rear brake system drops, the air pressure in chamber D is discharged via passage port of body, and chambers A and B into atmosphere.
- This changes the air pressure balance between chambers D and C. The air pressure in chamber C raises relay piston, and exhaust valve seat B at the lower end of the relay piston separates from secondary inlet valve. Air pressure in the front brake system is discharged from exhaust passage chamber B into atmosphere.

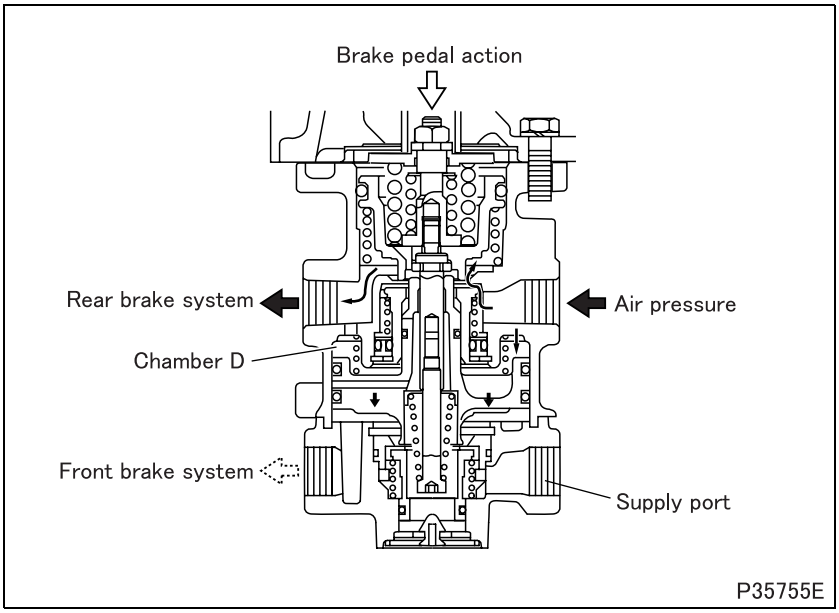

(6) When abnormality occurs

(6.1) Operation when the air pipe of the front brake system fails

- The primary side operates the same as normal, generating braking pressure in rear brake system.
- At the secondary side, even if the primary side generates air pressure in chamber D, braking pressure is not generated in front brake system, since no air pressure is generated in supply port.

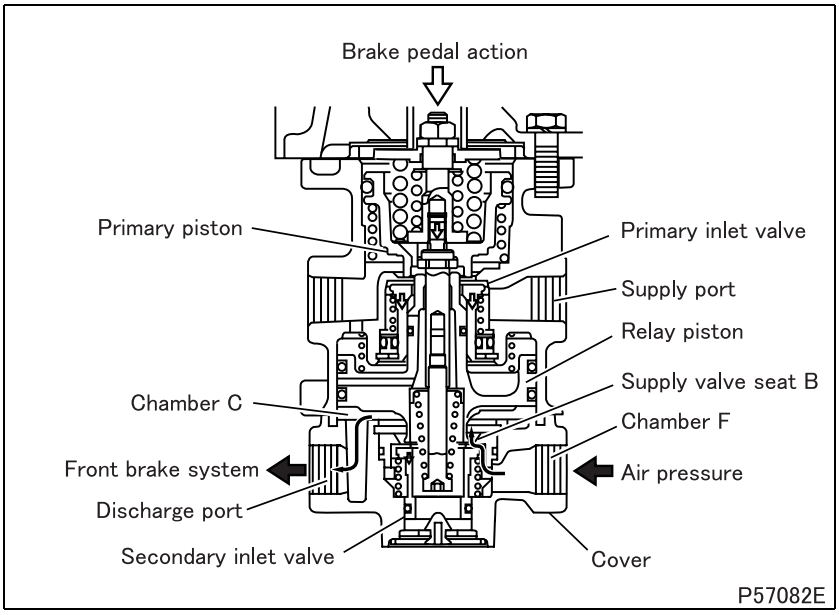

(6.2) Operation when the air pipe of the rear brake system fails

- In the rear brake system, air pressure is not generated up to supply port. Therefore, even if the brake pedal is pressed (causing primary piston to force down primary inlet valve), braking pressure is not generated.
- If the brake pedal is pressed further (illustrated as brake pedal action), primary piston makes contact with relay piston and they force down secondary inlet valve.
- This action separates supply valve seat B of cover from secondary inlet valve. The air pressure flows into chamber C from chamber F and is fed to front brake system via discharge port as braking pressure.

M E M O

5. Brake Booster

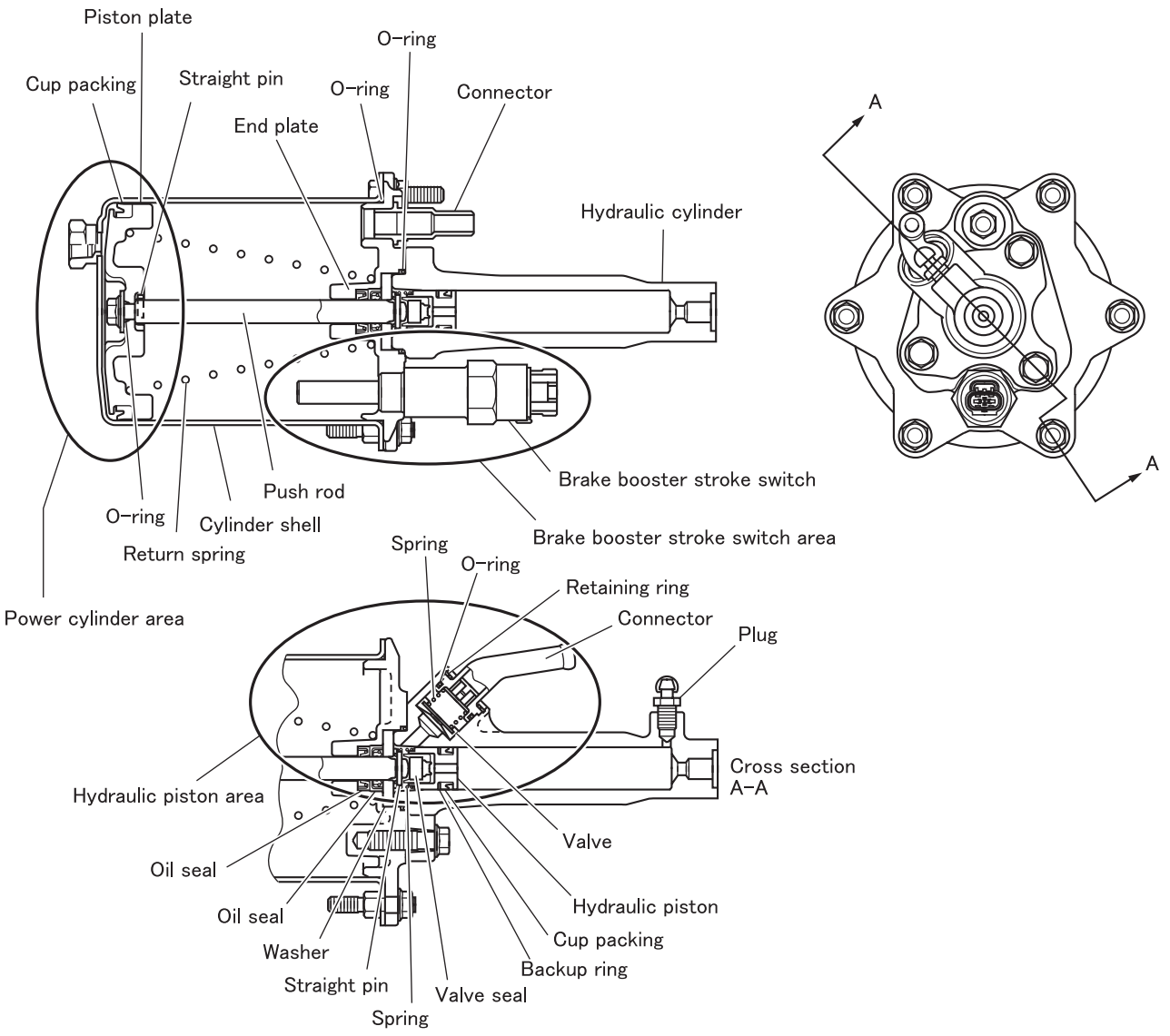

5.1 Power cylinder area

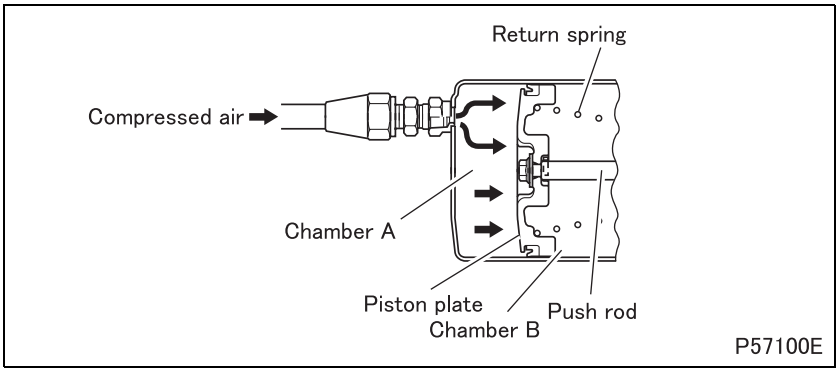

- Operation of the dual brake valve feeds compressed air into chamber A, activating the piston plate. As chamber B is opened to the atmosphere, a pressure difference between chambers A and B is generated. When this force becomes greater than the spring force of the return spring, the piston plate moves to the right.
- The piston plate is fitted with the push rod that transmits the force of the compressed air received at the piston plate to hydraulic piston area.

5.2 Hydraulic piston area

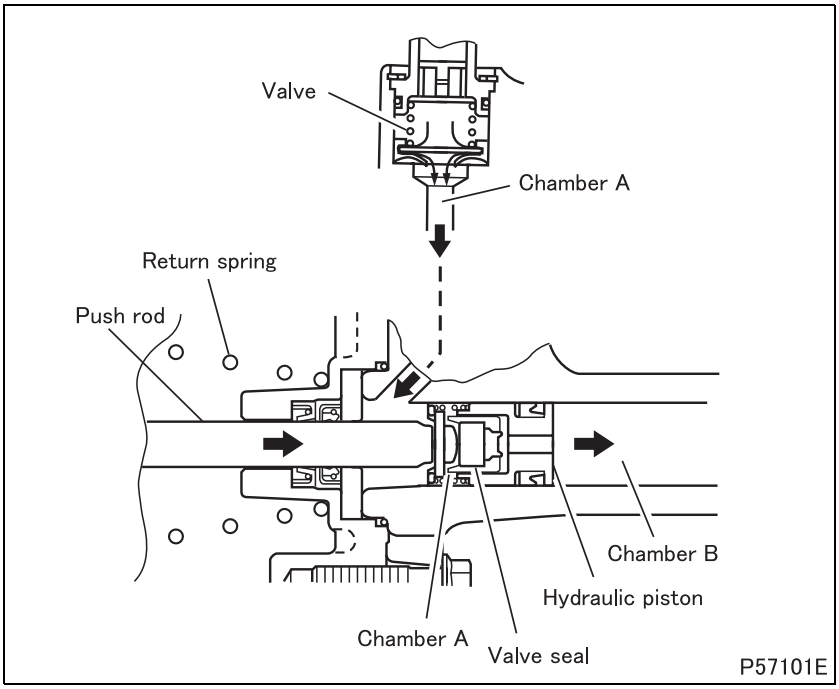

(1) When functioning

- The movement of the piston plate compresses the return spring, which moves the push rod, then the hydraulic piston to the right.
- The valve seal seats on the hydraulic piston, closing the passage between the chamber A on the fluid tank side and the chamber B on the wheel cylinder side. As the hydraulic piston moves to the right, the brake fluid in the chamber B is pressurized, and power is transmitted to the wheel cylinder.
- As the hydraulic piston moves to the right, the chamber A expands in volume and the pressure in the chamber drops. This causes the valve to open, and brake fluid is now drawn from the fluid tank.

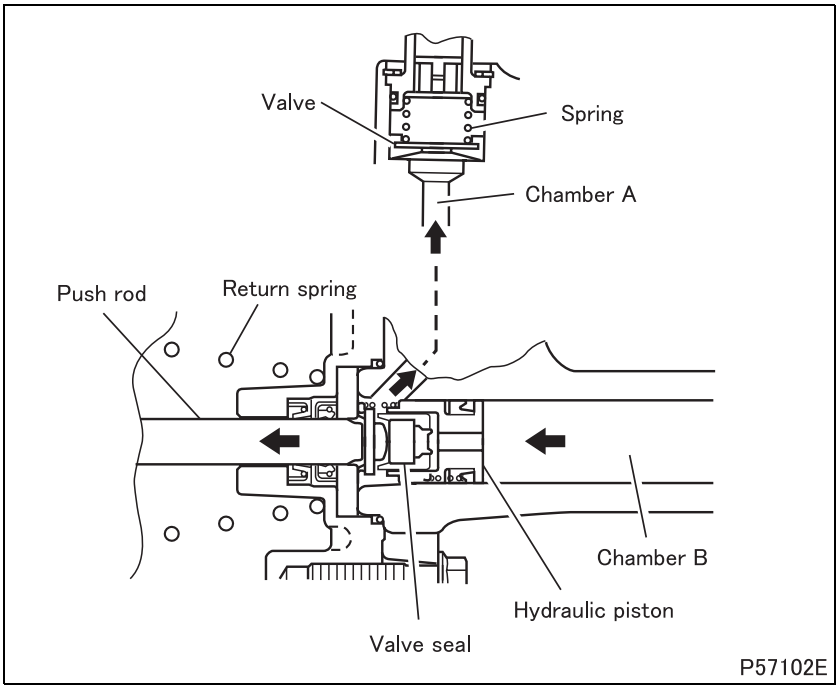

(2) When released

- Releasing the brake pedal frees the compressed air at the rear side of the piston plate into the atmosphere. The hydraulic piston is returned to its original position by the spring force of the return spring of the push rod and the brake fluid pressure of chamber B, then the valve seal hits the push rod, connecting chamber B and chamber A.
- The brake fluid flows back through the chamber A to the valve, where it compresses the spring and flows around the periphery of the valve and back to the fluid tank.
- The valve is held into position when equilibrium is reached between the brake fluid pressure and the force of the spring.

5.3 Brake booster stroke switch area

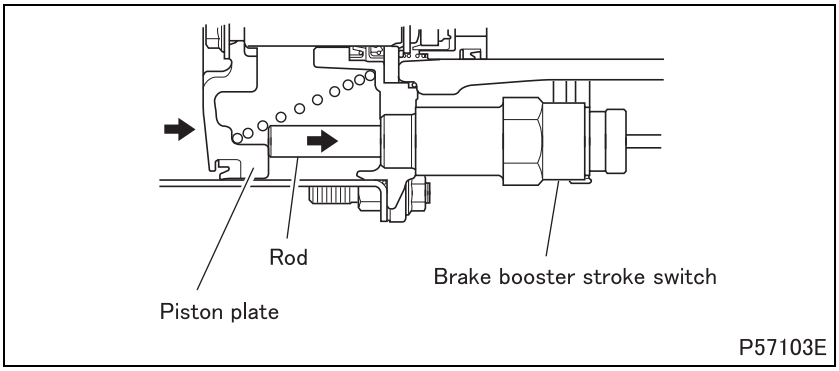

- When the brake lining is excessively worn, or the brake fluid leaks due to fractured brake piping, etc., the stroke of the piston plate grows excessive. As a result, the piston plate hits the rod and pushes it to the right.
- This moves the brake booster stroke switch to the ON position. The warning lamp on the meter cluster illuminates to alert the driver.

6. Fluid Tank

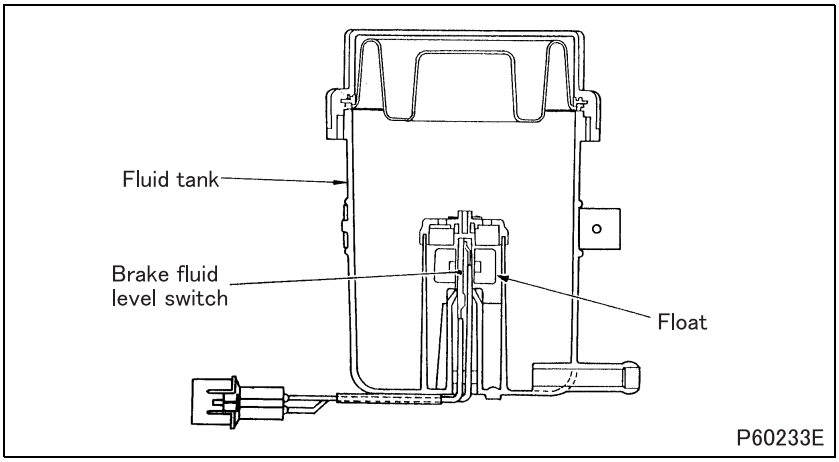

- The fluid tank is equipped with a brake fluid level switch which is designed to sense the brake fluid level in the tank. If the bake fluid level drops below a certain level, the float moves accordingly to actuate the brake fluid level switch. This causes the warning lamp on the meter cluster to turn on, alerting the driver.

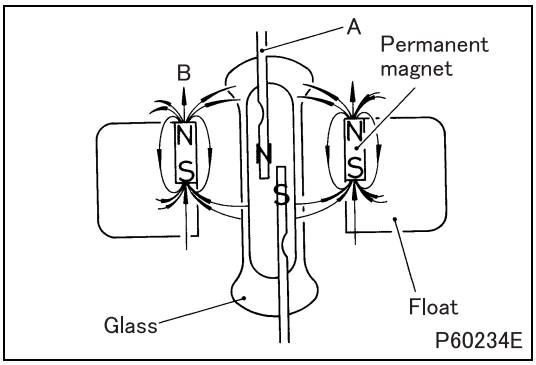

- When the brake fluid level in the fluid tank drops so much as to bring the float to or below the L level, many magnetic lines of flux B pass through the contact (ferromagnetic body A). As a result, the ends of the contacts turn into north and south poles. This causes the contacts to pull each other and attach together against their own force of spring, thereby forming an electric circuit.

7. Front Drum Brake

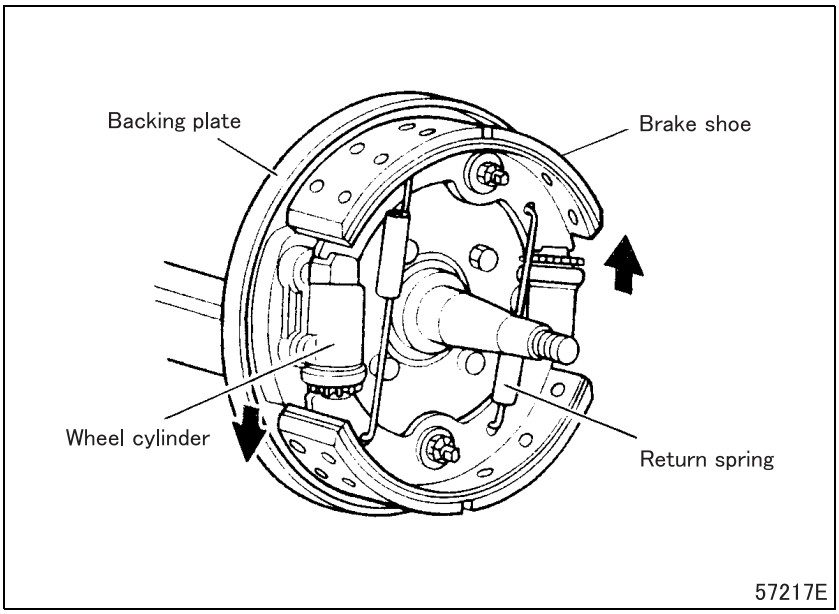

- The front drum brake is of a 2-leading type.
- Single-acing wheel cylinders activate brake shoes, both as a leading shoe, in forward-travel braking. By self-boosting effect, the 2-leading shoe brake generates a great stopping power.

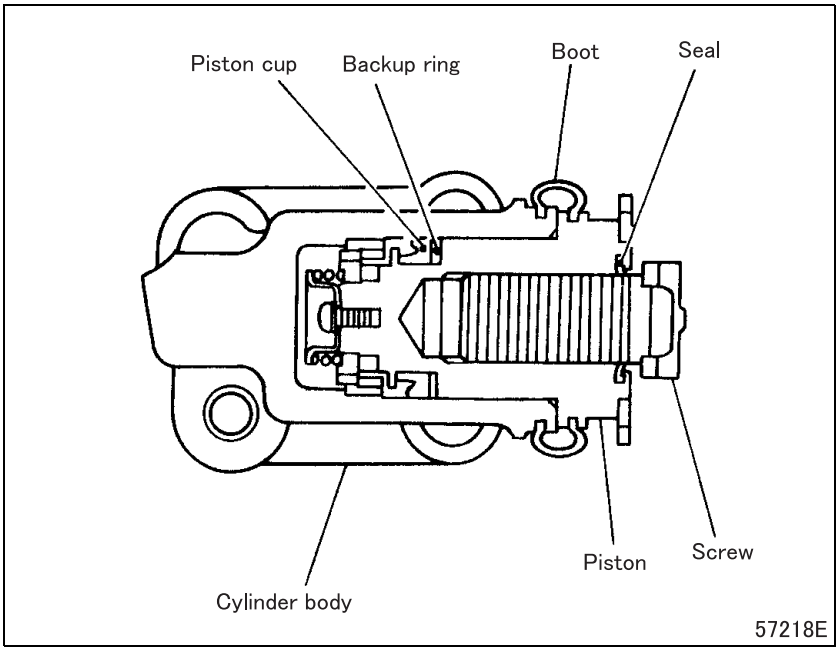

7.1 Wheel cylinder

- The wheel cylinder is equipped with an automatic adjuster mechanism to compensate for lining wear and maintain the correct clearance between the lining and the drum. The adjustment is made each time braking is performed.

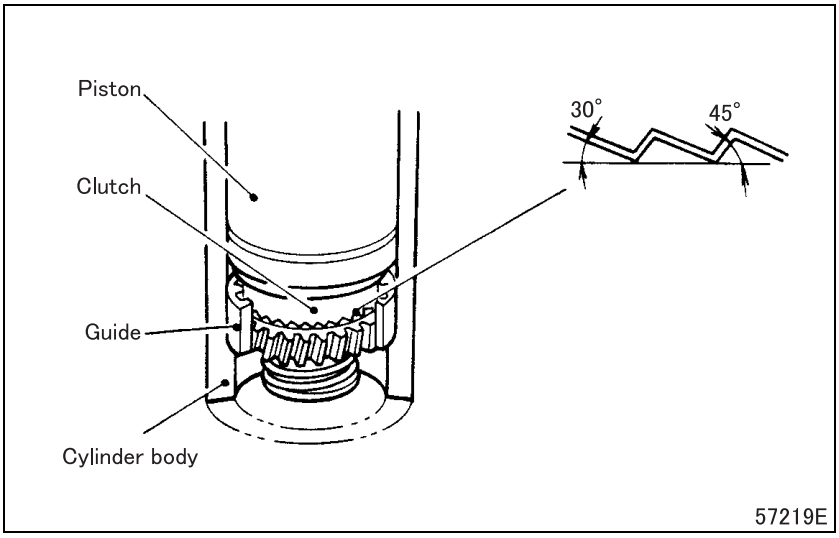

(1) Automatic adjuster mechanism

30°: The teeth can easily slide over the others as the piston is pushed out forward.

45°: As the piston rotates back, the teeth are positively held in mesh.

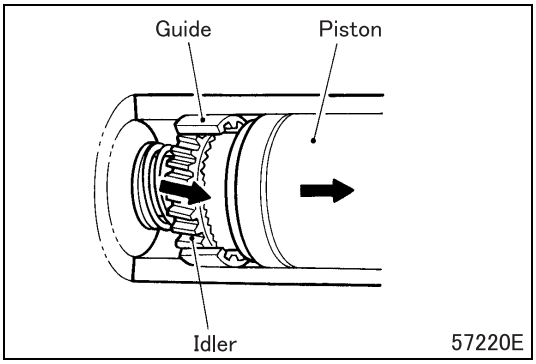

(1.1) When brake is being applied

- As brake fluid pressure is applied to the wheel cylinder, the piston is pushed out.
- As the piston is pushed out, the idler of the piston, which is in mesh with the internal helical gear of the guide on the cylinder body, rotates as it moves with the piston.

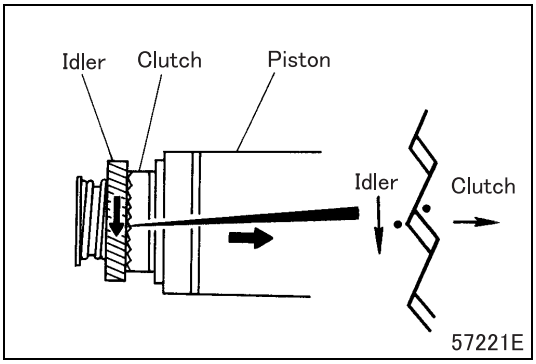

- As the idler rotates, the mesh between the idler and clutch comes loose.

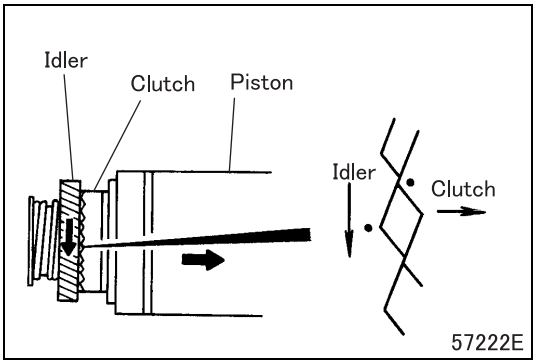

(1.2) When brake has been applied

● When the brake shoe clearance is to specification

- The idler rotates in proportion to how far the piston travels. When the brake shoe clearance is to specification, the rotation of the idler is not enough to cause its teeth to slide over the teeth of the clutch.

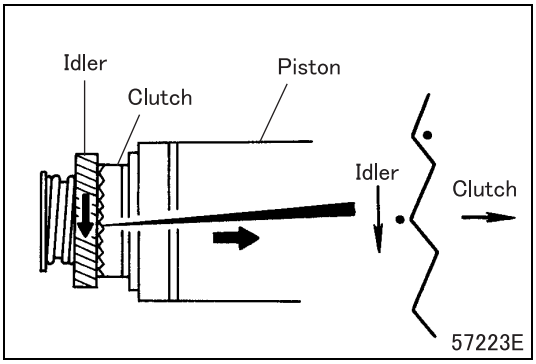

● When the brake shoe clearance is excessive

- When the brake shoe clearance is excessive, the rotation of the idler is sufficient to cause its teeth to go over the teeth of the clutch by one tooth before meshing with them again.

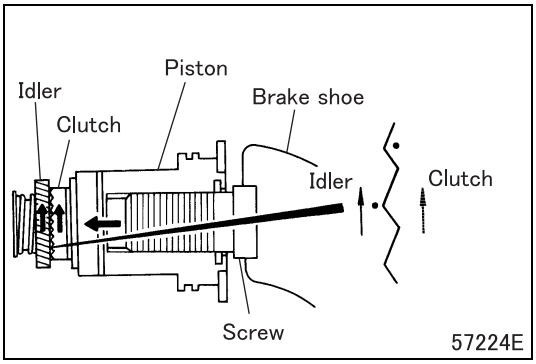

(1.3) When brake is being released

- As the brake fluid pressure drops and the piston is pulled in, the idler rotates back along the guide on the cylinder body.
- When the brake shoe clearance is to specification, the original mesh of the clutch has been maintained. With this, the piston is pulled in to the original position without turning.
- When the brake shoe clearance is excessive, the mesh between the idler and clutch has changed by one tooth. As a result, the piston rotates by the amount corresponding to one tooth as it is pulled in.
  This results in the piston having been pulled in further than before relative to the piston screw, which is fixed to the brake shoe and therefore does not rotate with the piston. Only the piston moves back and the brake shoe clearance now has been reduced to specification.

8. Rear Drum Brake

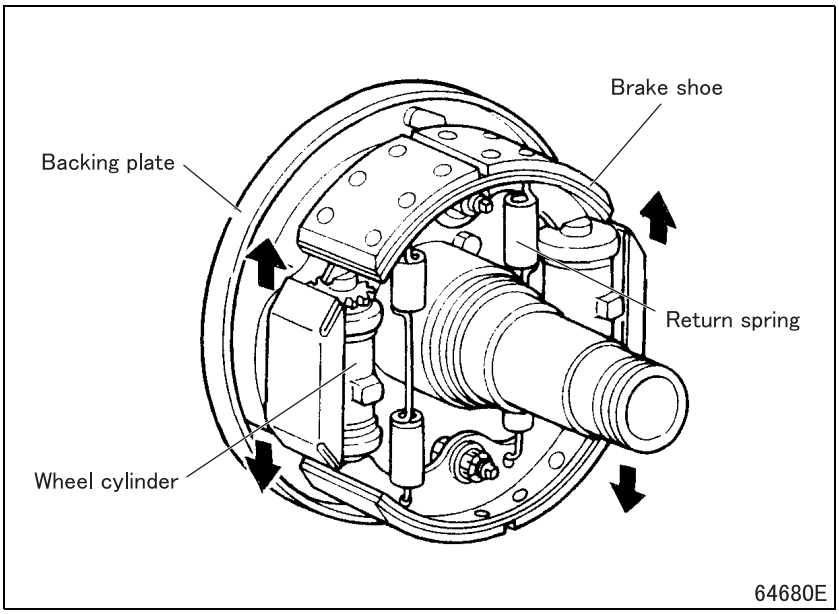

- The rear drum brake is of a dual 2-leading type.
- Double-acing wheel cylinders activate brake shoes, both as a leading shoe, in forward- and rearward-travel braking. By self-boosting effect, the dual 2-leading shoe brake generates a great stopping power.

8.1 Wheel cylinder

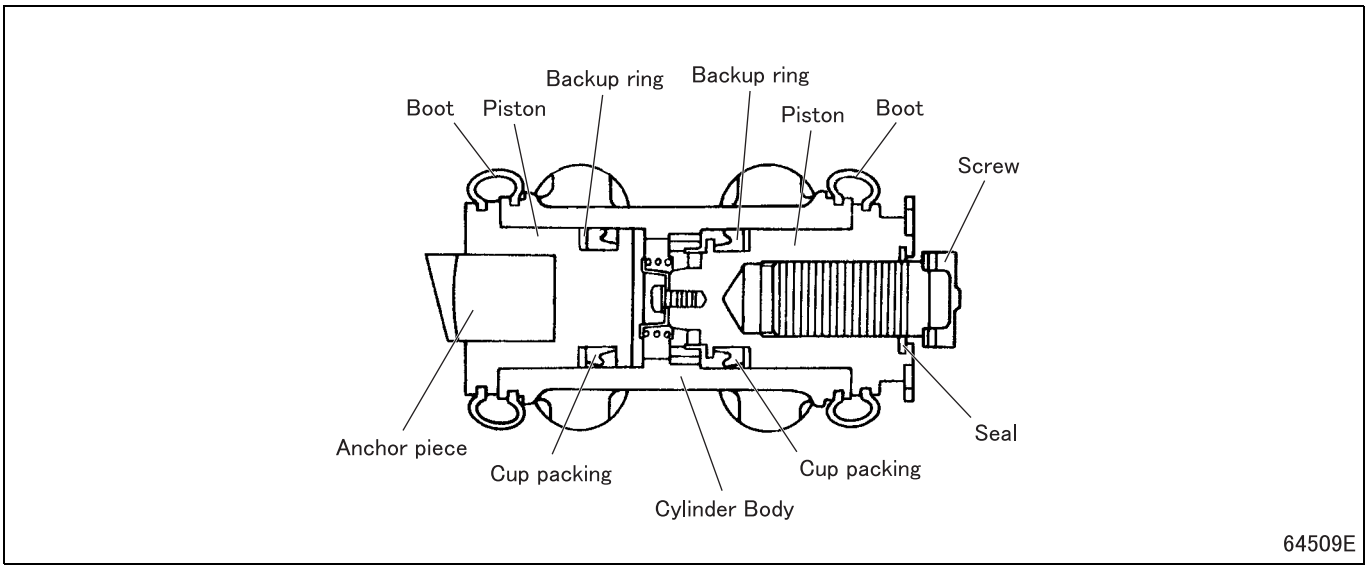

- The wheel cylinder is equipped with an automatic adjuster mechanism to compensate for lining wear and maintain the correct clearance between the lining and the drum. The adjustment is made each time braking is performed.
- The automatic adjuster mechanism operates on the same principles as those for the front drum brake.

9. Supply Valve

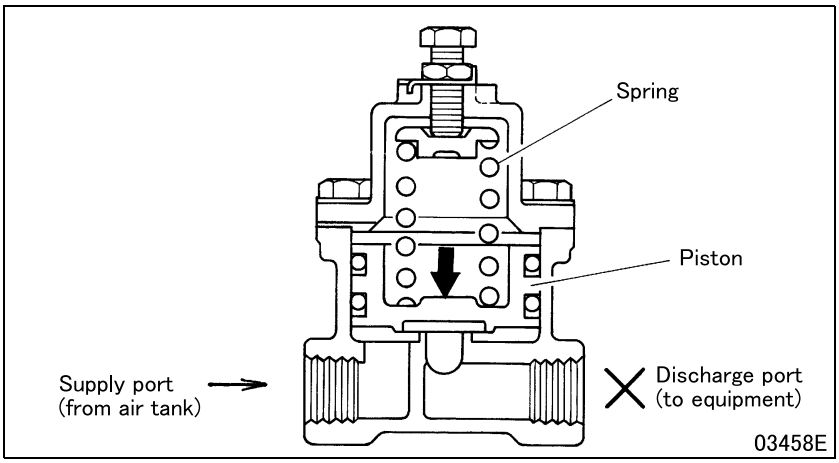

- Should air leak from any air system, the supply valve cuts off air supply to maintain braking air.
- The supply valve operates in such a way that when air pressure in any air system of equipment is lowered below the threshold level, the spring pushes down the piston to shut off the leaking air passage.

10. Quick Release Valve

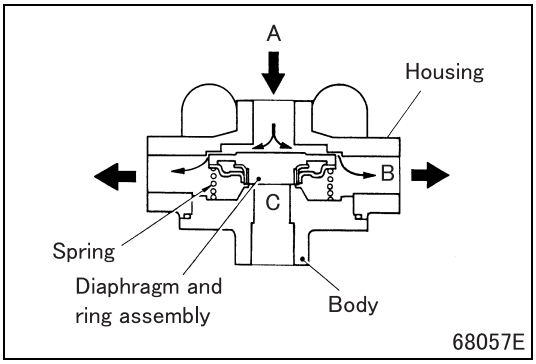

10.1 Stabilization of brake pressure

- Air pressure A from the supply port pushes down diaphragm and ring assembly tightly up against body, thus shutting down chamber B from chamber C. It further presses down spring, causing the diaphragm and ring assembly to leave housing, which allows air pressure A to flow into chamber B.

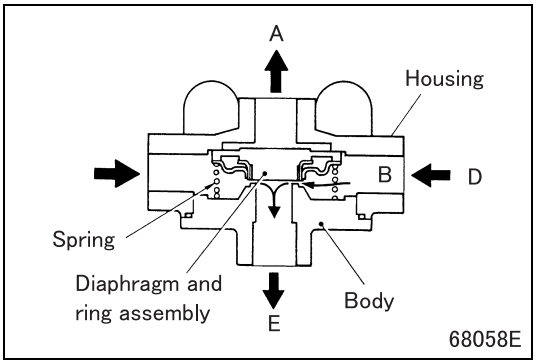

10.2 When brake pedal is pressed

- Air pressure A is released from the supply port and the tension of spring causes diaphragm and ring assembly to leave body. At the same time, air pressure D from the brake chamber is discharged into the atmosphere through exhaust port E.

Wheel Brake

Possible causes	Symptoms	Wheel brake not effective				Brake drum over-heating						Reference Gr
		Air leaks when brake pedal is pressed down	Air leaks when brake pedal is free	Brake not quite effective though no air leakage	Air pressure too low	Brake shoe return slow when brake pedal is released (brake drum drags)	Noise generated when brake pedal is pressed down	Wheel brake application one sided	Wheel brake works suddenly	(!) warning lamp illuminates		
Wheel brake	Too much brake shoe clearance			O				O		O		
	Brake lining or pad surface greasy or oily			O								
	Brake lining or pad surface hardened with degradation			O			O					
	Wheel cylinder cup worn and brake fluid leakage			O								
	Brake lining or pad worn									O		
	Brake lining worn and rivet head is exposed						O					
	Uneven wear of brake drum inner surface						O					
	Improper fitness of brake shoe and brake lining						O					
	Brake drum mounting loose						O	O				
	Uneven material of brake lining or pad							O				
	Incorrect contact of brake lining							O				
	Deflection of brake drum							O				
	Backing plate warped							O				
	Too little brake shoe clearance					O		O	O			
	Brake shoe return spring worn-out or broken					O		O				
	Piston of wheel cylinder return inefficient					O		O				
	Brake fluid return inefficient due to clogging at brake pipe and joint					O						
Dual brake valve	O-ring damaged	O										
	Air tightness of primary or secondary valve incomplete	O	O									
	Inefficient return of primary or secondary valve or clogged by foreign matters at exhaust port					O						

Symptoms / Possible causes		Wheel brake not effective: Air leaks when brake pedal is pressed down	Wheel brake not effective: Air leaks when brake pedal is free	Wheel brake not effective: Brake not quite effective though no air leakage	Wheel brake not effective: Air pressure too low	Brake drum overheating: Brake shoe return slow when brake pedal is released (brake drum drags)	Noise generated when brake pedal is pressed down	Wheel brake application one sided	Wheel brake works suddenly	① warning lamp illuminates	Reference Gr
Brake booster	Power cylinder needs lubrication or rubber packing damaged			O							
	Hydraulic piston valve seal contact faulty			O							
	Hydraulic piston cup packing damaged, or wrong combination. Or stuck with foreign matter			O				O			
	Clogged with foreign matters at exhaust port					O					
	Push rod bent					O					
	Power cylinder rubber packing needs lubrication					O					
Brake air system	Connector loose	O	O								
	Air leakage				O						
	Improper adjustment of air pressure governor in the air dryer				O						
	Air compressor malfunction				O						
Brake fluid system	Fluid leakage or fluid level low			O						O	
	Air ingress			O						O	
Tires	Tire pressure uneven between left and right							O			Gr31
Suspension	Leaf spring U-bolt loose							O			Gr33 Gr34

Possible causes \ Symptoms		Deposits come out of drain cock of air tank	No deposits come out of exhaust port	Freezing takes place within air dryer	Air pressure in air tank decreases markedly	Engine oil leaks from exhaust port	Reference Gr
Air dryer	Deterioration of desiccating agent	O					
	Inoperative heater causing air dryer to freeze		O				
	Malfunctioning of valve due to adherence of foreign particles		O				
	Heater circuit open and therefore no heat retention			O			
	Heater malfunction due to thermostat malfunction			O			
	Extreme lowering of temperature of air dryer main body due to adherence of snow/ice			O			
	Heater malfunction due to disconnection with thermostat			O			
	Dry air in air tank flows out in reverse when check valve of air dryer fails to function as a non-return valve				O		
	Rising of oil level in air compressor					O	

1. Exhaust Noise from Brake Valve

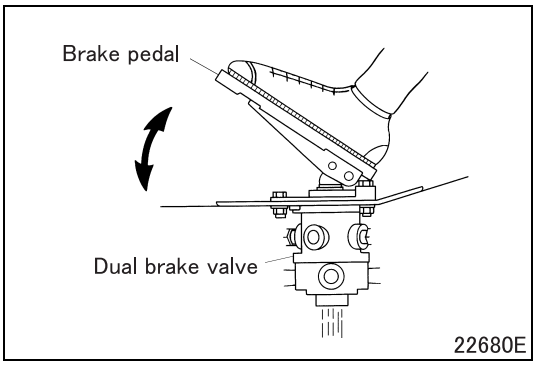

- When the brake pedal is pressed and released, exhaust noise should be heard from the dual brake valve. Check if the pedal fully returns to its original position without hitching.

2. Air Pressure Build-up

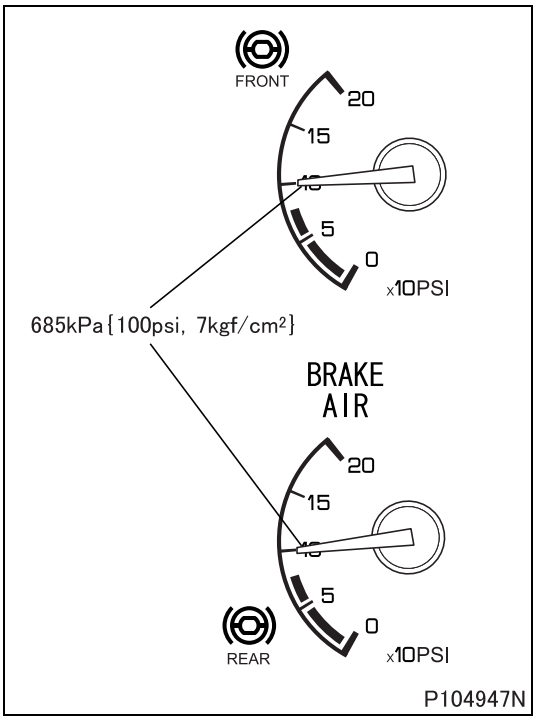

- Fully discharge compressed air by opening the drain cock on the air tank.
- With the engine started and set at idle, measure the time it takes for the air pressure indicated on the gauge to rise from 0 kPa {0 psi, 0 kgf/cm^2} to 685 kPa {100 psi, 7 kgf/cm^2}. The time taken depends on the vehicle model.

Vehicle model	Time
FK61	6 min
FK62, FK65, FM	9 min

3. Replacement of Brake Fluid

Lubricant and/or sealant

Mark	Points of application	Specified lubricant and/or sealant	Quantity
–	Brake fluid tank	Brake fluid (SAE J1703 or FMVSS No. 116, DOT3)	As required

Special tools (Unit: mm {in.})

Mark	Tool name and shape	Part No.	Application
a	Vinyl pipe A: ϕ7 {0.28} B: 1200 {47.2} 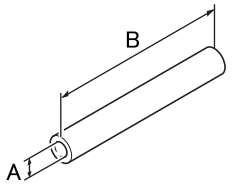 P00328	MH033102	Replacement of brake fluid

CAUTION ⚠

- **Brake fluid is corrosive on paintwork. Be careful not to spill it onto the paint work. If brake fluid is spilled onto the paint work, immediately wipe it off.**
- **Be sire to use new brake fluid (SAE J1703 or FMVSS No. 116, DOT3). Do not mix it with brake fluid of different properties or mineral oil (gas oil, engine oil, gear oil, automatic transmission fluid, etc.). This will alter the original properties of brake fluid, causing the boiling point to drop as well as the brake rubber parts to swell. Faulty operation of the brake will result.**
- **Ensure that no foreign matter or water into the brake fluid when refilling it, as they will cause faulty brake operation.**
- **Using a mug exclusively kept for the specified brake fluid. This ensures that no brake fluid of different properties or mineral oil enter into the system.**
- **During brake fluid replacement operation, a change in color of the brake fluid being discharged indicates that the old brake fluid in the system has been replaced with the new brake fluid.**
- **During replacement, be sure to keep the brake fluid level at the "H" mark on the brake fluid tank.**

3.1 Preparation

- In order to ensure that vacuum booster functions properly, start the engine and keep it running at idle until the replacement is completed.
- Attach a to the air bleeder and place the end in a container.

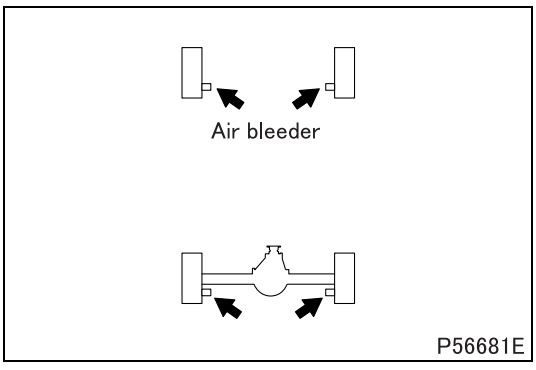

P56681E

3.2 Replacement of brake fluid

- Loosen each air bleeder and press and release the brake pedal repetitively to drain brake fluid completely.
- While filling the brake fluid tank with new brake fluid up to the "H" level of the brake fluid tank, cycle the brake pedal repetitively until the old brake fluid being discharged is replaced with new brake fluid.
- Tighten each air bleeder to the specified torque after the brake fluid replacement is complemented.

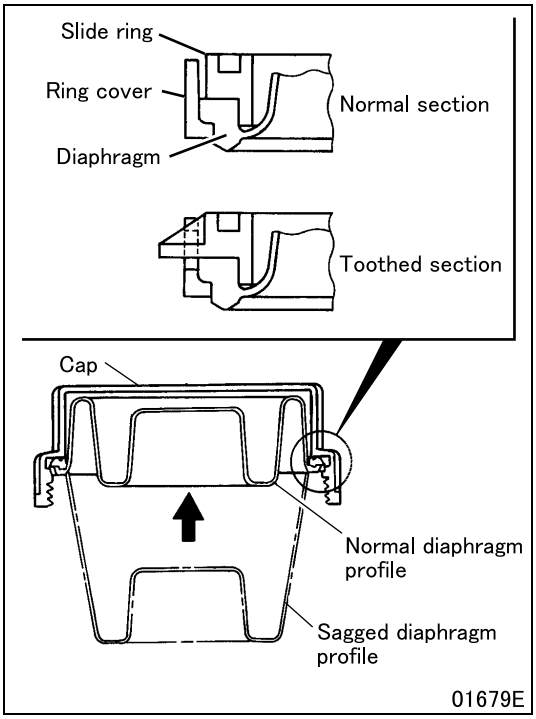

- If the diaphragm is not in the normal profile after the brake fluid is replenished, press it into the normal profile before installing the cap.
  If the brake fluid leaks through the cap, check if the diaphragm has been installed as shown in the illustration.

- Bleed the brake system of air.

4. Air Bleeding of Brake System

Tightening torque (Unit: N·m {ft.lbs, kgf·m})

Mark	Parts to be tightened		Tightening torque	Remarks
–	Air bleeder	Wheel brake	9.8 ± 2.0 {7.2 ± 1.5, 1.0 ± 0.2}	–
		Brake booster	7 to 12 {5.2 to 8.9, 0.7 to 1.2}	

Lubricant and/or sealant

Mark	Points of application	Specified lubricant and/or sealant	Quantity
–	Brake fluid tank	Brake fluid (SAE J1703 or FMVSS No. 116, DOT3)	As required

Special tools (Unit: mm {in.})

Mark	Tool name and shape	Part No.	Application
Ca	Vinyl pipe A: ϕ7 {0.28}, B: 1200 {47.2} 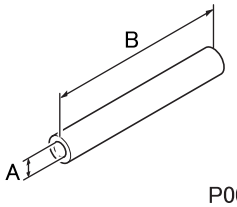 P00328	MH033102	Replacement of brake fluid

CAUTION ⚠

- **Brake fluid is corrosive on paintwork. Be careful not to spill it onto the paint work. If brake fluid is spilled onto the paint work, immediately wipe it off.**
- **Be sire to use new brake fluid (SAE J1703 or FMVSS No. 116, DOT3). Do not mix it with brake fluid of different properties or mineral oil (gas oil, engine oil, gear oil, automatic transmission fluid, etc.). This will alter the original properties of brake fluid, causing the boiling point to drop as well as the brake rubber parts to swell. Faulty operation of the brake will result.**
- **Ensure that no foreign matter or water into the brake fluid when refilling it, as they will cause faulty brake operation.**
- **Using a mug exclusively kept for the specified brake fluid. This ensures that no brake fluid of different properties or mineral oil enter into the system.**
- **During brake fluid replacement operation, a change in color of the brake fluid being discharged indicates that the old brake fluid in the system has been replaced with the new brake fluid.**
- **During replacement, be sure to keep the brake fluid level at the "H" mark on the brake fluid tank.**

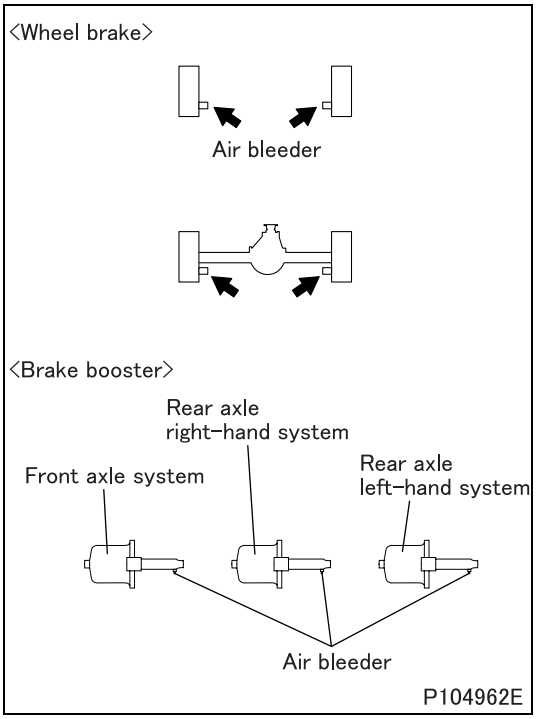

4.1 Preparations

- Start the engine and run it at idle until air bleeding is completed in order for the brake booster to operate normally.
- Install one end of [a] to the air bleeder. Place the other end of [a] into a container.

4.2 Air bleeding of brake system

- Perform air bleeding on each wheel in the order listed below until all wheels are bled of air.

Order of air bleeding	Brake system	Wheel
1	Front axle system	Brake booster (front axle system)
2		Front right-hand side wheel (FR)
3		Front left-hand side wheel (FL)
4	Rear axle system	Brake booster (rear axle right-hand system)
5		Rear right-hand side wheel (RR)
6		Brake booster (rear axle left-hand system)
7		Rear left-hand side wheel (RL)

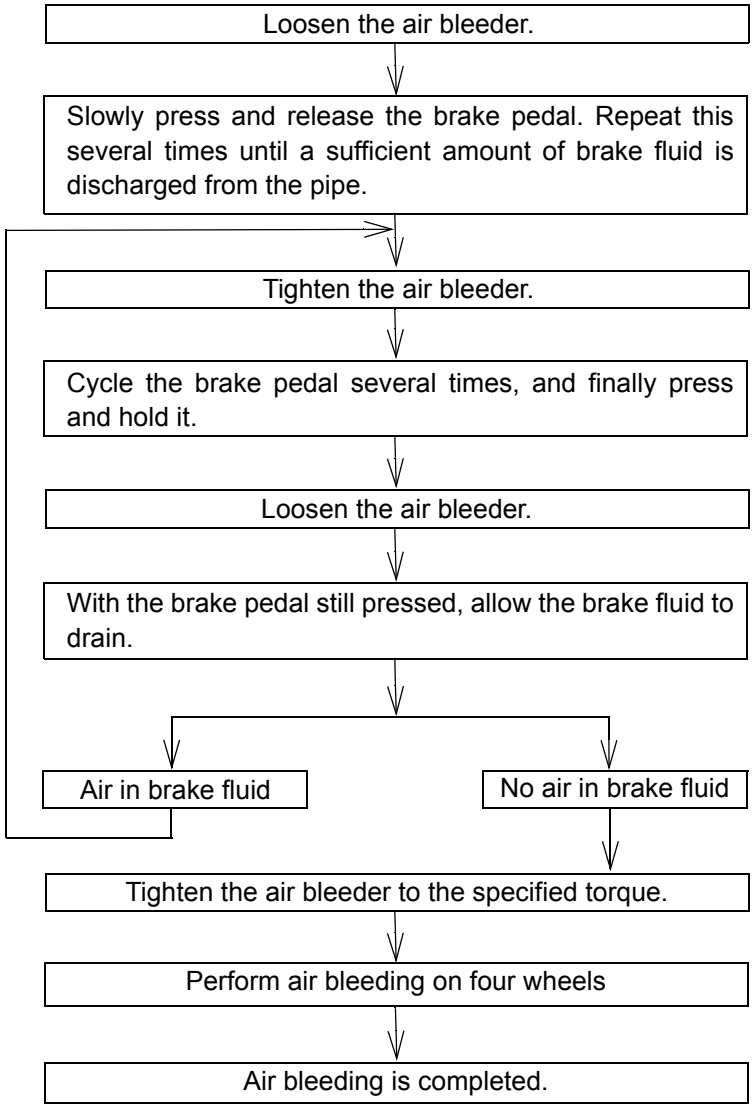
Loosen the air bleeder.
Slowly press and release the brake pedal. Repeat this several times until a sufficient amount of brake fluid is discharged from the pipe.
Tighten the air bleeder.
Cycle the brake pedal several times, and finally press and hold it.
Loosen the air bleeder.
With the brake pedal still pressed, allow the brake fluid to drain.
Air in brake fluid
No air in brake fluid
Tighten the air bleeder to the specified torque.
Perform air bleeding on four wheels
Air bleeding is completed.

5. Inspection and Adjustment of Brake Pedal Free Play

Service standards (Unit: mm {in.})

Location	Maintenance item		Standard value	Limit	Remedy
–	Pedal free play	Depression angle	$3.5^{\circ}\ ^{+1.0^{\circ}}_{-0.5^{\circ}}$	–	Adjust
		Pedal toe	$12\ ^{+3.0}_{-1.5}$ {$0.47\ ^{+0.12}_{-0.059}$}		

Tightening torque (Unit: N·m {ft.lbs, kgf·m})

Mark	Parts to be tightened	Tightening torque	Remarks
–	Lock nut	5.0 to 7.8 {3.6 to 5.8, 0.5 to 0.8}	–

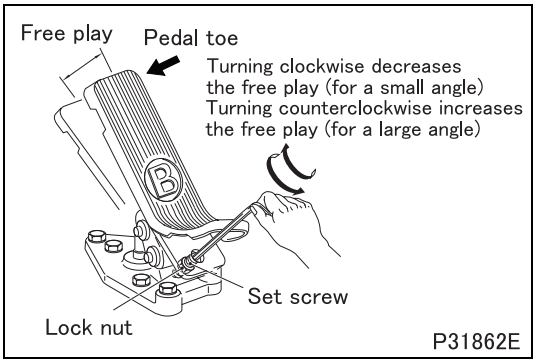

[Inspection]

- Measure the free play of the brake pedal by pressing the pedal tip by hand.
- If the measurement deviates from the standard values, make an adjustment.

[Adjustment]

- Loosen the lock nut and adjust the free play by turning the set screw.
- After adjustment, tighten the lock nut to the specified torque.

6. Inspection of Drum Brake Lining Thickness

CAUTION ⚠

- **Be sure to inspect both shoes on each wheel to avoid malfunction of brakes.**

Service standards (Unit: mm {in.})

Location	Maintenance item	Standard value	Limit	Remedy
–	Thickness of brake lining	12 {0.47}	5 {0.20} (side shoulder means wear limit)	Replace

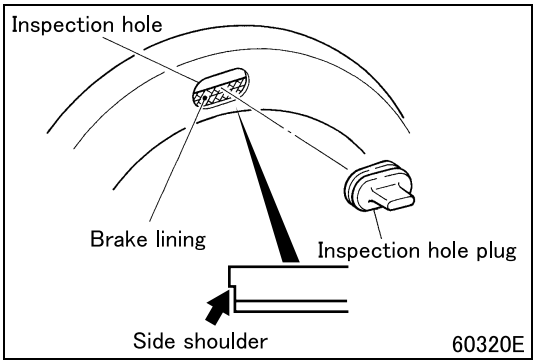

- Remove the inspection hole plug from the inspection hole in the backing plate. Through the inspection hole, measure the thickness of the brake lining.
- If any lining is worn down to the step on the side face, replace all linings on that axle.
- After the inspection, be sure to install the plug onto the inspection hole.

7. Initial Adjustment of Clearance between Brake Drum and Shoe

7.1 Front drum brake

CAUTION ⚠

- **To ensure correct operation of the brakes, be sure to inspect both shoes on each wheel.**

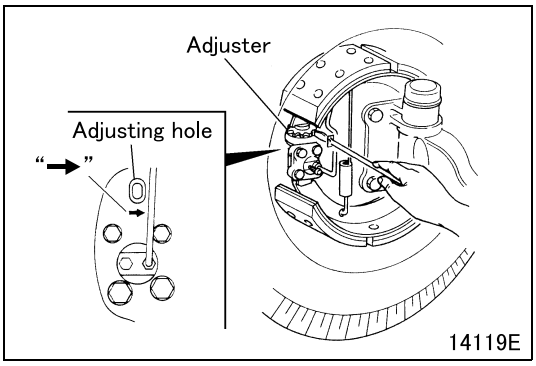

- Jack up front wheel, and make sure that hub bearings are not loose. If loose, adjust the hub bearings. (See Gr26A.)
- Insert the screwdriver into the adjusting hole, turn the tire by hand, and turn the adjuster of front wheel to the direction as shown by arrow on the backing plate so that wheel will turn with slight friction.
- Step on brake pedal a few times, and make sure that tire turns by hand with slight friction. If wheel turns lightly, do over the above-mentioned procedure.

- Return the adjuster 8 or 9 notches opposite to the direction of arrow.
- Turn tire by hand and make sure that there is no friction. If there is friction, do over the above-mentioned procedure.

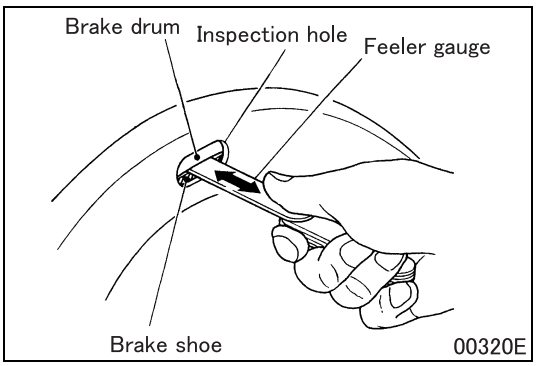

- Insert a 0.2 mm {0.0079 in.} feeler gauge through the inspection hole between the brake drum and lining, and make sure that you can slide the gauge to and fro with slight resistance.

7.2 Rear drum brake

CAUTION ⚠

- **To ensure correct operation of the brakes, be sure to inspect both shoes on each wheel.**

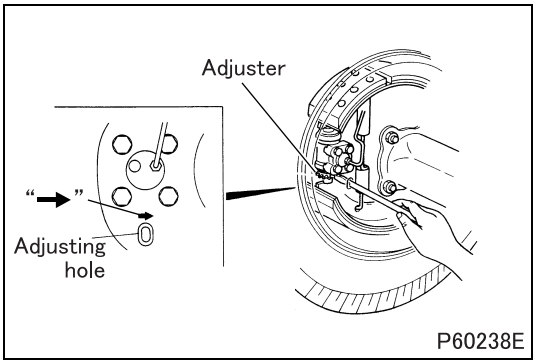

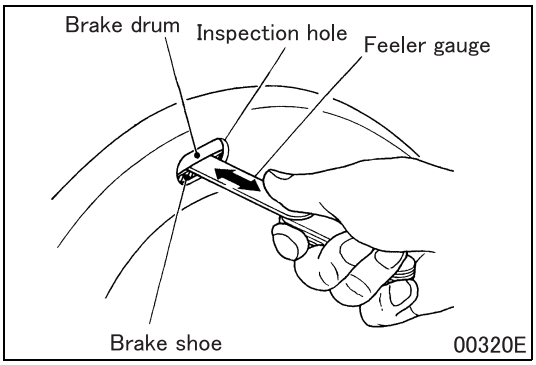

- Jack up front wheel, and make sure that hub bearings are not loose. If loose, adjust the hub bearings. (See Gr27.)
- Insert the screwdriver into the adjusting hole, turn the tire by hand, and turn the adjuster of front wheel to the direction as shown by arrow on the backing plate so that wheel will turn with slight friction.
- Step on brake pedal a few times, and make sure that tire turns by hand with slight friction.
  If wheel turns lightly, do over the above-mentioned procedure.
- Return the adjuster 8 or 9 notches opposite to the direction of arrow.
- Turn tire by hand and make sure that there is no friction. If there is friction, do over the above-mentioned procedure.
- Insert a 0.2 mm {0.0079 in.} feeler gauge through the inspection hole between the brake drum and lining, and make sure that you can slide the gauge to and fro with slight resistance.

8. Maintenance and Inspection of Air Dryer

Perform maintenance and inspections at each of the indicated intervals or distances.

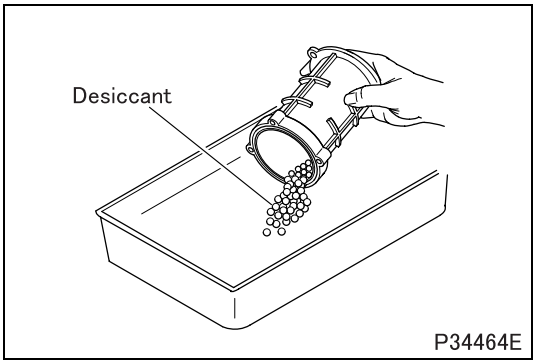

8.1 Every 10,000 km (6,000 miles)

- Check whether the air dryer is functioning properly by opening the drain cock on the air tank and checking whether water flows out.
- If a small amount of water flows out, check whether the desiccant has changed color. If one fifth or more of the desiccant has changed in color from white to brown, replace the desiccant. (See ‘‘AIR DRYER’’.)

NOTE

- **A small amount of moisture may collect whenever the temperature in the vicinity of the air tank drops by more than 16°C {61°F}.**
- Place the desiccant in the case, then settle the desiccant by tapping gently and evenly around the case with a plastic hammer.

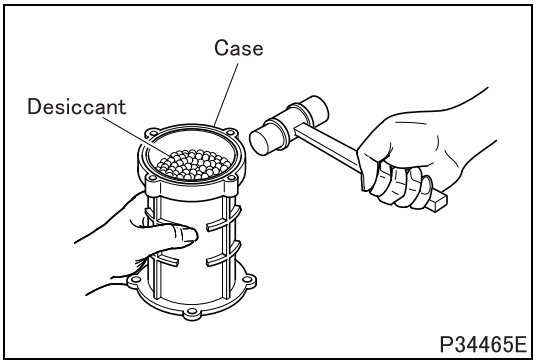

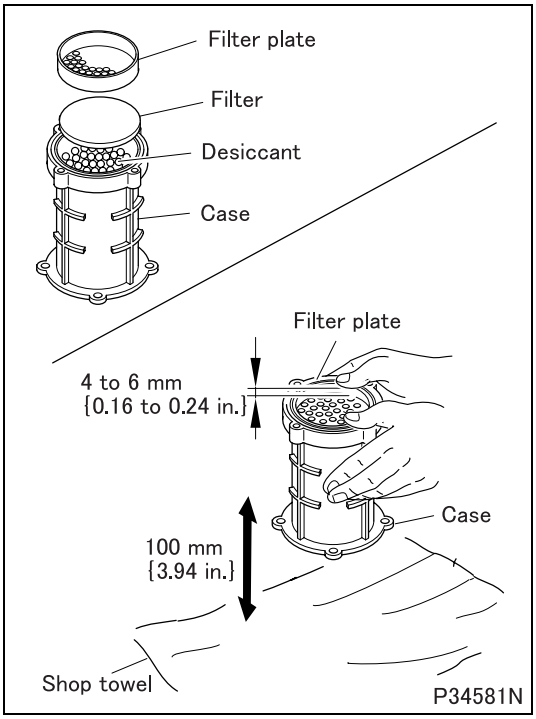

- Place the soft layer side of the filter on the desiccant, and place the filter plate on the case, then tap the desiccant down.

<Tapping>

- Before tapping the case against the work surface, lay two or three layers of shop towel on the work surface to protect the bottom of the case from scratches.
- Holding down the filter plate with both hands, lift the case to a height of about 100 mm {3.94 in.} and tap it gently against the work surface.
- Tap the case about 30 more times. Make sure the filter plate drops by 4 to 6 mm {0.16 to 0.24 in.} from its original position.

WARNING ⚠

- **Unless the tapping procedure is performed, particles of desiccant may escape and create blockages in brake lines, thus preventing normal brake operation.**

- Look carefully at the water that flows out of the air dryer’s exhaust port. If the water is contaminated with oil, inspect the air compressor. (See ‘‘AIR COMPRESSOR’’.)

8.2 Every year or every 60,000 km {36,000 miles}

Disassemble the air dryer and replace the desiccant, oil filter, and replated rubber parts with repair kit A. (See ‘‘AIR DRYER’’.)

9. Inspection and Adjustment of Air Dryer's Air Pressure Governor

Service standards

Location	Maintenance item		Standard value	Limit	Remedy
–	Threshold pressure	Upper threshold pressure	$890\ ^{+29}_{-20}$ kPa {$130\ ^{+4.2}_{-2.9}$ psi, $9.1\ ^{+0.3}_{-0.2}$ kgf/cm^2}	–	Adjust
		Lower threshold pressure	760 ± 15 kPa {110 ± 2.2 psi, 7.7 ± 0.2 kgf/cm^2}	–	Replace

Tightening torque (Unit: N·m {ft.lbs, kgf·m})

Mark	Parts to be tightened	Tightening torque	Remarks
–	Plug	14.7 to 24.5 {10.8 to 18.1, 1.5 to 2.5}	–
–	Cap nut (seat and plate mounting)	4.9 to 5.9 {3.6 to 4.4, 0.5 to 0.6}	–
–	Nut (for retention of adjusting screw)	6.9 to 7.8 {5.1 to 5.8, 0.7 to 0.8}	–

Lubricant and/or sealant

Mark	Points of application	Specified lubricant and/or sealant	Quantity
–	Plug thread	ThreeBond 1110B	As required

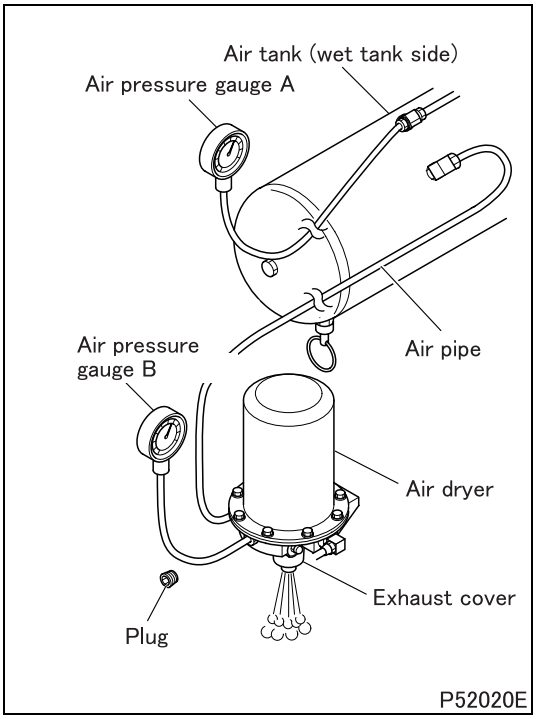

[Inspection]

- Install the air pressure gauge A between the air dryer and air tank (wet tank side).
- Remove the plug from the air dryer at the location shown in the drawing. Connect air pressure gauge B at that point.

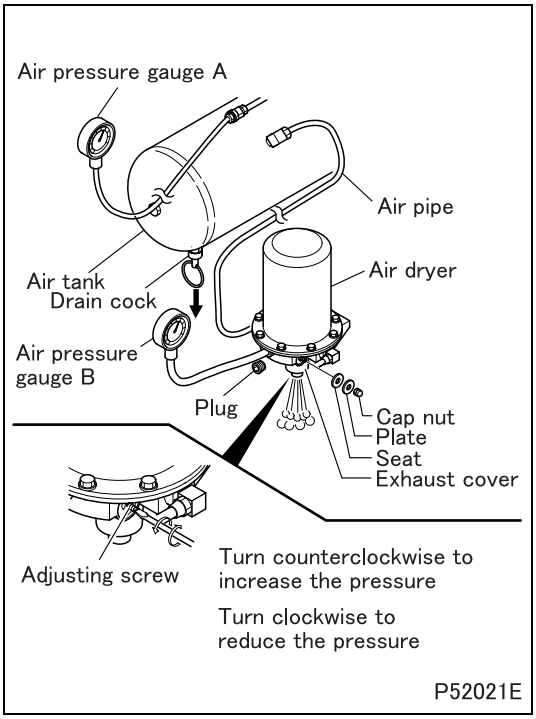

[Adjustment]

- Remove the cap nut, plate, and seat.
- Start the engine and gradually increase the air pressure in the air tank.
- Turn the adjusting screw until the pressure indicated by air pressure gauge A when air is expelled from the exhaust cover is the standard value (the upper threshold pressure).
- Reduce the air pressure to 690 kPa {100 psi, 7 kgf/cm^2} or lower, then gradually increase it again. Check whether the pressure indicated by the air pressure gauge A is the standard value (the upper threshold pressure). If the indicated pressure deviates from the standard value, make further adjustments.
- With the upper threshold pressure indicated, air from the air compressor is expelled from the exhaust cover continuously. With the equipment in this condition, open the drain cock to gradually reduce the air pressure. When air stops being expelled from the exhaust cover, check whether the pressure indicated by air pressure gauge B is the standard value (the lower threshold pressure). If the indicated pressure deviates from the standard value, replace relevant parts of the air compressor governor as an assembly.

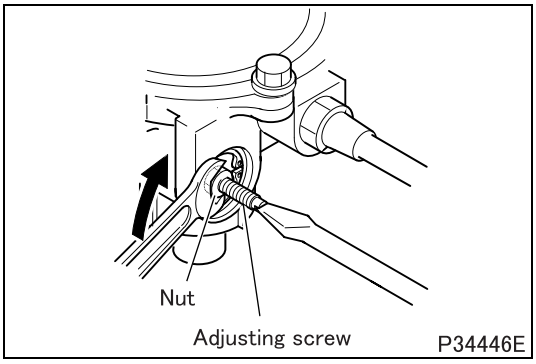

- Tighten the nut to hold the adjusting screw in position.

M E M O

HANDLING OF NYLON TUBE FOR AIR LINE <COMPRESSION TYPE>

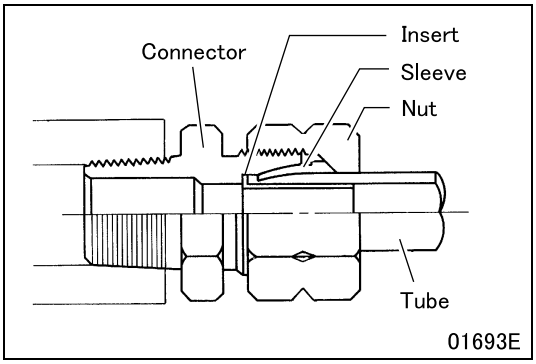

- The nylon tube (hereafter referred as “tube”), on which an insert has been installed, is retained in the connector by tightening the nut onto the connector, which causes the sleeve to bite into the tube and thereby air tightness is achieved. Therefore, once the nut is tightened, the tube, insert and sleeve are all deformed and cannot be reused. (See later section.)
- For information on removal and installation of the tube, see the procedure. (See later section.)

Special tools

Mark	Tool name and shape	Part No.	Application
ca	Tube cutter 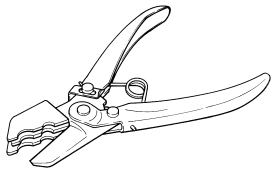 28287	MC083532	Cutting of tube

(1) Precautions for handling the tube

- The tube can sustain damage or break when exposed to heat, acid, or when scored. Always replace the tube with a new part when the tube appears defective.
  - Do not expose the tube or connector to heat of 100°C {212°F} or above.
  - Whenever welding is performed, protect the tube from related heat and spark.
  - Do not allow the tube to come into contact with battery electrolyte.
  - Do not stamp on, fold, or press sharp edges against the tube.
  - When pressure washing the vehicle, do not place the nozzle too close to the tube.

(2) Precautions for routing the tube

- Observe the minimum bending radius for the various types of tubes listed in the table below.
- Wherever the tube and connector are located near the engine or other hot spots, provide heat protection plates or other similar means to keep the temperatures of the tube and connector below 100°C {212°F}.
- Wherever the tube is likely to sustain damage or wear, protect them using corrugated tube, grommet or similar.
- Temperature change can cause the tube to lengthen or shrink. When routing the tube, provide an extra tube length of approx. +1 %.
- Use those clamps that are designed to not cause damage to the tube. The tube should be clamped at intervals of approx. 500 mm {19.7 in.}.
- Wherever possible, refrain from using relay connectors. If they need to be used, be sure to clamp them to prevent deflecting while taking care that the mounting area for the relay connector is also protected from damage.
- After several months following production, the tubes will likely start becoming stiffer, making them less easy to route. Wherever possible, use new tubes.
- After the tube has been routed, check it for air leakage, deflection or interference.

(3) Removal and installation of tube

CAUTION ⚠

- **The tube can sustain damage during installation or removal. Do not remove and re-install them more often than necessary.**
- **A connector which is dirty inside must be replaced with a new part.**
- **Replace the tube with a new part when it is damaged or it has been cut too short.**

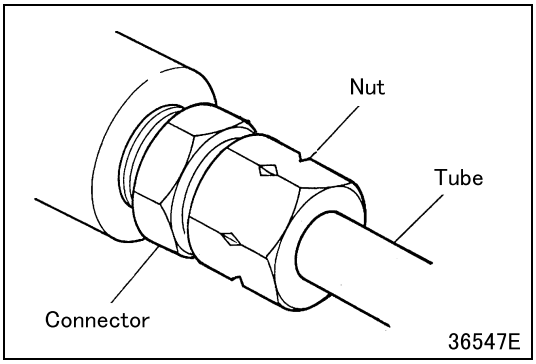

[Removal]

- Completely release air pressure from the tube.
- Before removing the tube from the connector, clean the periphery of the connector, nut and tube. A connector which is contaminated inside must not be reused.

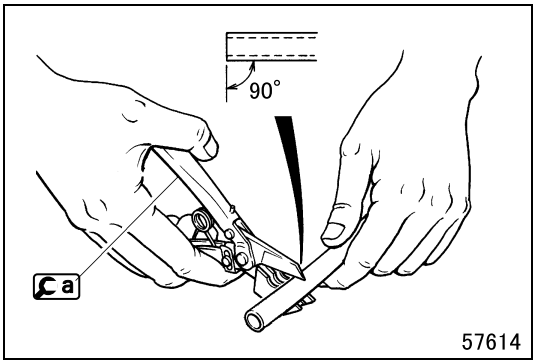

[Installation]

- Check the portion of the tube that is to be inserted into the connector for damage or contamination.
- Cut away any damage or curl in the tube insertion portion using a.

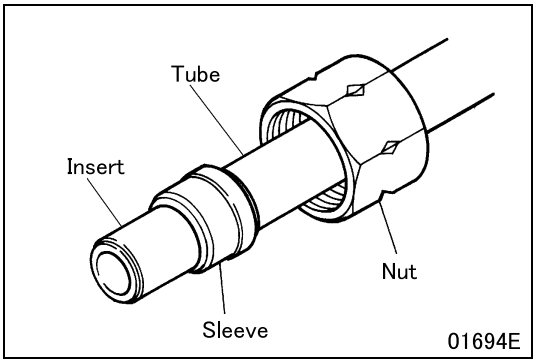

- Ensure that the insert, sleeve, nut and tube are arranged as shown in the illustration.

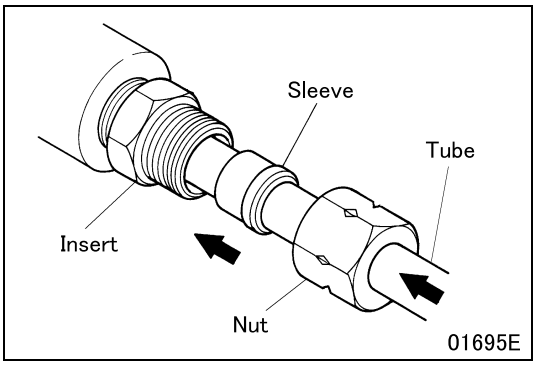

- Insert the tube into the connector until it reaches the end of the connector. Press the sleeve into the connector and temporarily tighten the nut by hand.
- Tighten the nut to the specified torque.
  Then, pull the tube to ensure that it will not come off and there is no air leakage.

1. Basic Identification Colors

- There are basic identification colors assigned to each pipe line.
- Numbers (1) to (4) shown in the identification color symbol column denote the priority of application.
- All color symbols are the same as those for electric harnesses except additional P, S, Gr and Br.

Pipe line	Tube identification color symbol				Denotation of line color (1)
	(1)	(2)	(3)	(4)	
1. Air charge line	R	RR	RW	RGr	Red
2. Rear brake line	P	PP	PW	PGr	Pink
3. Front brake line	O	OO	OW	OGr	Orange
4. Spring brake line	G	GG	GW	GGr	Green
5. Trailer brake line	Y	YY	YW	YGr	Yellow
6. Accessory line	L	LL	LW	Gr	Blue
7. Clutch fluid line	–	–	–	–	Purple
Composition of basic identification color	Line color	Line color × 2	Line color + white	Line color + gray	

2. Auxiliary Identification Colors

- Auxiliary identification colors for non-brake air lines are as specified below.

Pipe line	Auxiliary identification color				
6. Accessory line	LR	LP	LO	LY	LBr

3. Use of Auxiliary Identification Colors by Equipment

3.1 Accessory line

- LL/LW, etc. in the Delivery column denote the colors for two output lines, of which LL and LW are mainly used for the left side and right side, respectively.

Location/Equipment	Identification color		Location/ Equipment	Identification color	
	Supply	Delivery		Supply	Delivery
1. Line in front of cab • Seat air suspension	LGr LBr		**3.** Line on left side of frame • Exhaust shutter valve • Differential lock	LL LBr L	LL/LW LL
2. Line on right side of frame • Clutch ϕ10	L LW	LGr			

4. Tube Size and Identification Color

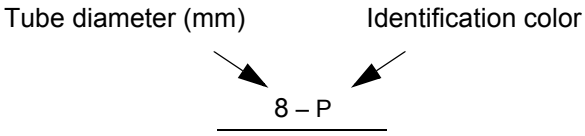

- Line tube ends are taped in different colors for identification. When tubes are connected and disconnected, make sure of their tape colors. When a tube is replaced, wrap the new tube with the tape in the same color. If no tape in the same color is available, tape the tube in such a manner that it can be clearly distinguished from others.

Lubricant and/or sealant

Mark	Points of application	Specified lubricant and/or sealant	Quantity
–	Taper screw area of connector	ThreeBond 1110B	As required

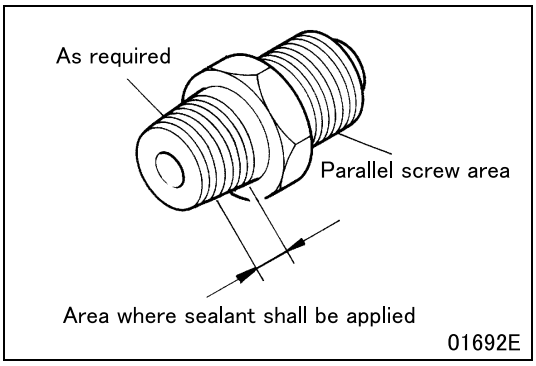

- When installing once removed connector of air system for brakes, remove remainder of sealant, oil, and water sufficiently.
- Apply sealant to threads leaving 1 or 2 threads on top blank.

CAUTION ⚠

- **Be careful not to apply sealant to the parallel screw area of the connector.**

- Where alignment is required, stop at aligning point in additional tightening process.

AIR COMPRESSOR

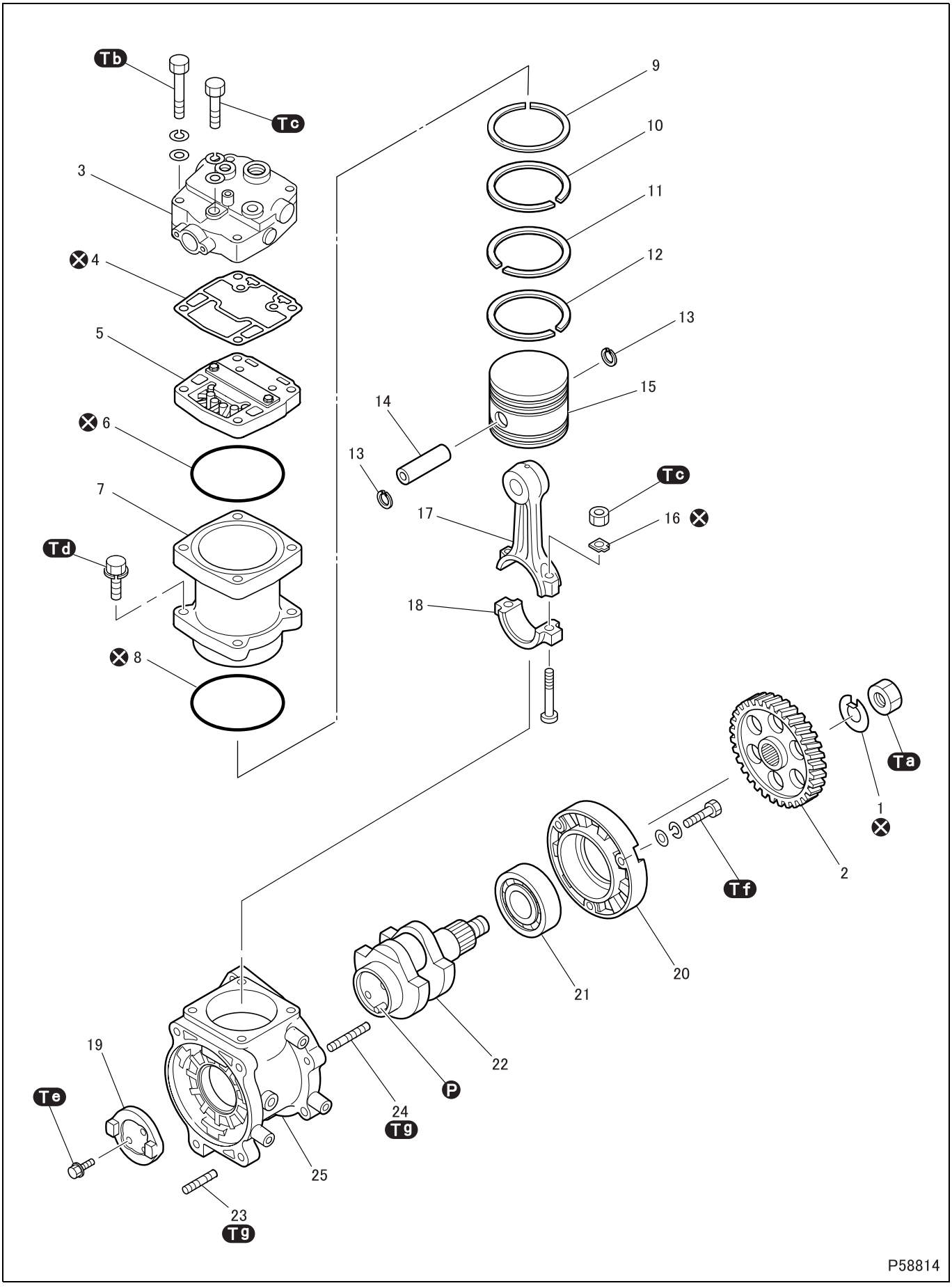

- For removal and installation of the air compressor, see Gr11.

● **Disassembly sequence**

1 Lock washer
2 Compressor gear
3 Cylinder head
4 Gasket
5 Valve seat
6 O-ring
7 Cylinder
8 O-ring
9 1st compression ring
10 2nd compression ring
11 3rd compression ring
12 Oil ring
13 Snap ring
14 Piston pin
15 Piston
16 Lock washer
17 Connecting rod
18 Connecting rod cap
19 Coupling
20 Bearing cover
21 Bearing
22 Crankshaft
23 Stud bolt
24 Stud bolt
25 Crankcase

Ⓟ: Locating pin
⊗: Non-reusable parts

● **Assembly sequence**

Follow the disassembly sequence in reverse.

Service standards (Unit: mm {in.})

Location	Maintenance item		Standard value	Limit	Remedy
7, 15	Clearance between cylinder and piston	Top	0.27 to 0.33 {0.011 to 0.013}	0.35 {0.014}	Replace
		Skirt	0.11 to 0.17 {0.0043 to 0.0067}	0.19 {0.0075}	
9 to 12	Piston ring end gap (measured with ring placed in cylinder)	Compression ring	–	1.0 {0.039}	Replace
		Oil ring	–	1.5 {0.059}	
9 to12, 15	Clearance between piston ring and piston groove	Compression ring	–	0.08 {0.0031}	Replace
		Oil ring	–	0.08 {0.0031}	
14, 15	Clearance between piston pin and piston		–	0.08 {0.0031}	Replace
14, 17	Clearance between piston pin and connecting rod small end		–	0.07 {0.0028}	Replace
17	End play of connecting rod		–	0.5 {0.0020}	Replace
17, 22	Clearance between connecting rod big end and crankshaft		–	0.1 {0.0039}	Replace
22	Crankshaft end play		–	1.0 {0.039}	Replace
22, 25	Clearance between crankshaft and crankcase bushing inside diameter		–	0.12 {0.047}	Replace

Tightening torque (Unit: N·m {ft.lbs, kgf·m})

Mark	Parts to be tightened	Tightening torque	Remarks
Ta	Nut (compressor gear mounting)	167 to 186 {125 to 135, 17.0 to 19.0}	–
Tb	Bolt (cylinder head mounting)	29 to 34 {21 to 25, 3.0 to 3.5}	–
Tc	Bolt (valve seat mounting)	23 to 25 {17 to 18, 2.3 to 2.6}	–
	Bolt (connecting rod cap and connecting rod mounting)		
Td	Bolt (cylinder mounting)	25 to 29 {18 to 21, 2.5 to 3.0}	–
Te	Bolt (coupling mounting)	53 to 65 {39 to 48, 5.4 to 6.6}	–
Tf	Bolt (bearing cover mounting)	8.8 to 10.8 {6.5 to 8.0, 0.9 to 1.1}	–
Tg	Stud bolt	5.9 to 12 {4.4 to 8.9, 0.6 to 1.2}	–

Special tools

Mark	Tool name and shape	Part No.	Application
ⓒa	Piston ring tool 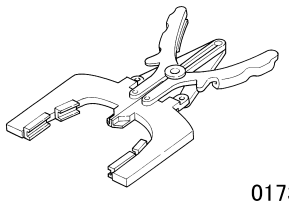 01732	MH060014	Removal and installation of compression rings

◆Removal procedure◆

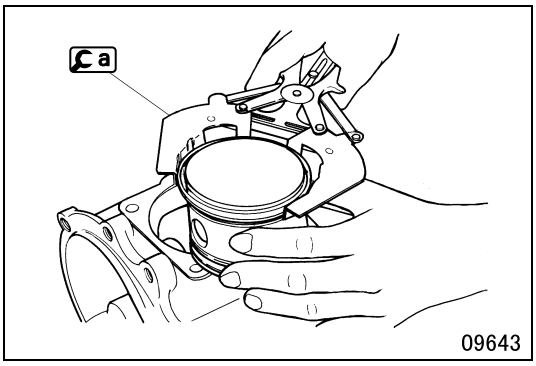

■ **Removal: Compression rings**

◆Installation procedure◆

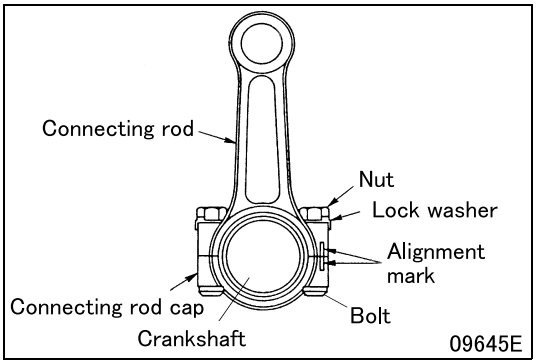

■ **Installation: Connecting rod cap and connecting rod**

- Assemble the connecting rod and cap while noting their alignment marks.
- Install bolts in such a way that the notches in the bolt heads are directed toward the inside of the connecting rod cap.
- After assembly, bend the lock washers.

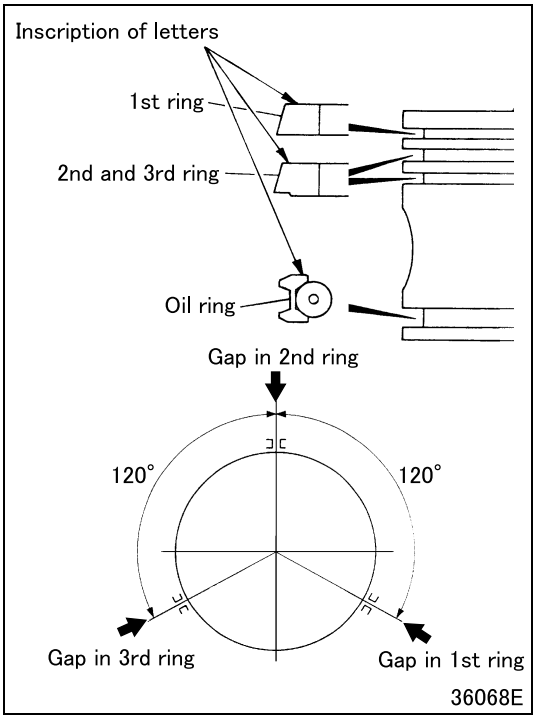

■ **Installation: Compression rings**

- Install the compression rings, ensuring that their end gaps are located as shown in the illustration.
- Install the compression rings by following the removal sequence in reverse.
  (See "■ **Removal: Compression rings**".)

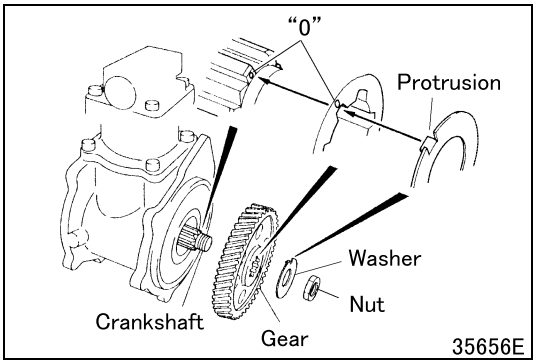

■ **Installation: Lock washer, compressor gear**

- Install the compressor gear onto the crankshaft, ensuring that "O" mark on the compressor gear is aligned with "O" mark on the crankshaft.
- Insert the protrusion of the lock washer such that the "O" mark on the compressor gear remains exposed.
- Tighten the nut to the specified torque. Bend one part at the bottom of the lock washer toward the nut to prevent the nut from loosening.

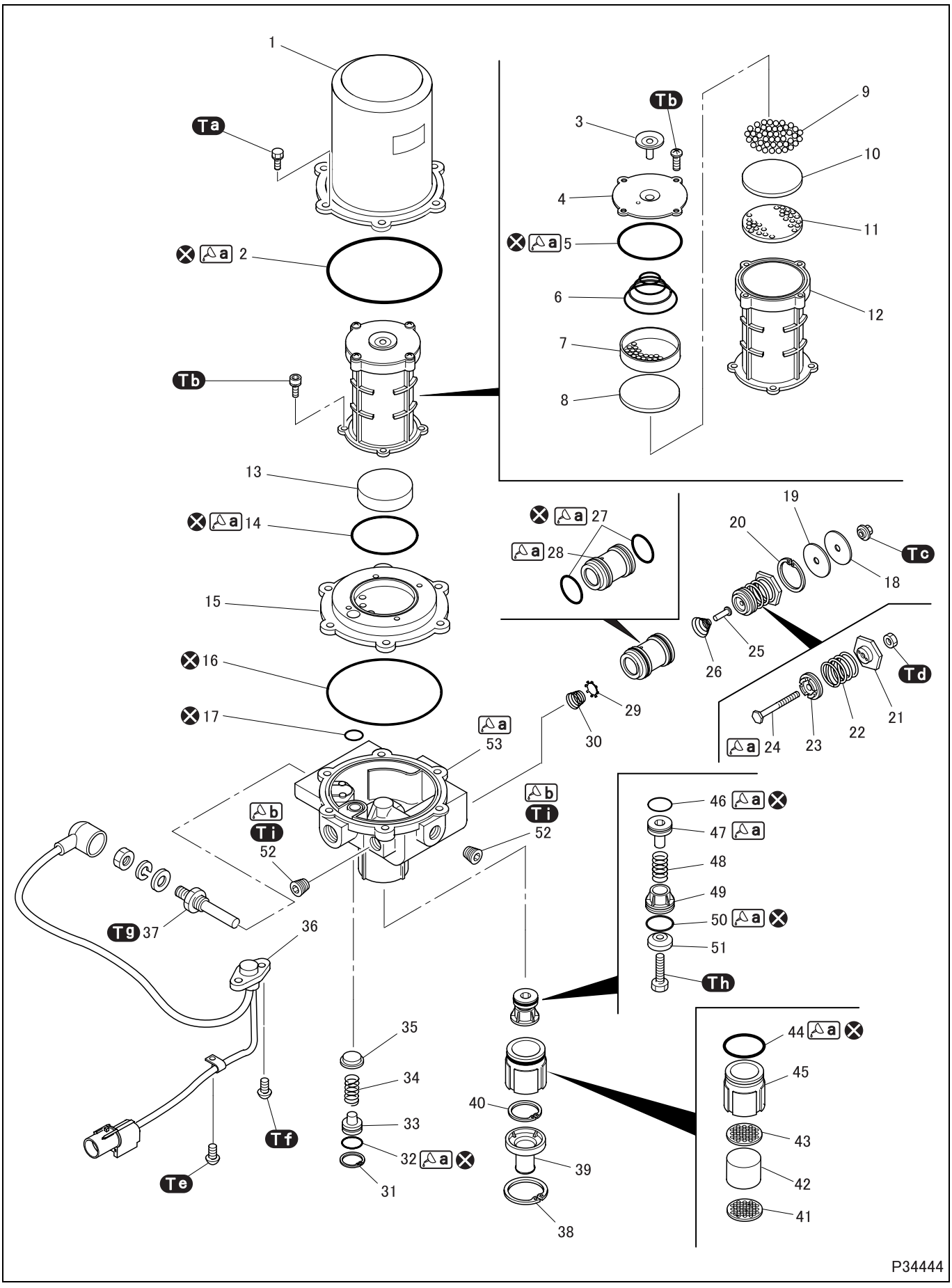
1
Ta
2
Tb
3
4
5
6
7
8
9
10
11
12
13
14
15
16
17
27
28
19
20
18
Tc
26
25
Td
24
23
22
21
53
29
30
b
Ti
52
46
47
48
49
50
51
Th
Tg
37
36
35
34
33
32
31
Tf
Te
40
39
38
44
45
43
42
41
P34444

● Disassembly sequence

1 Purge chamber
2 O-ring
3 Check valve
4 Case cover
5 O-ring
6 Set spring
7 Filter plate
8 Filter
9 Desiccant
10 Filter
11 Filter plate
12 Case
13 Oil filter
14 O-ring
15 Cover
16 Gasket ring
17 Gasket ring
18 Plate
19 Seat
20 Retaining ring
21 Upper spring seat
22 Spring
23 Lower spring seat
24 Adjusting screw
25 Exhaust stem
26 Exhaust stem spring
27 O-ring
28 Piston
29 Valve
30 Valve spring
31 Retaining ring
32 O-ring
33 Check valve guide
34 Check valve spring
35 Check valve
36 Thermostat
37 Heater
38 Retaining ring
39 Exhaust cover
40 Retaining ring
41 Silencer plate
42 Silencer
43 Silencer plate
44 O-ring
45 Silencer case
46 O-ring
47 Piston
48 Valve spring
49 Valve body
50 O-ring
51 Valve
52 Plug
53 Body

⊗: Non-reusable parts

● Assembly sequence

Follow the disassembly sequence in reverse.

CAUTION ⚠

- **Check and adjust the air pressure governor after assembly. (See "ON-VEHICLE INSPECTION AND ADJUSTMENT".)**

Repair kit: Air dryer kit

Tightening torque (Unit: N·m {ft.lbs, kgf·m})

Mark	Parts to be tightened	Tightening torque	Remarks
Ta	Bolt (purge chamber, cover and body mounting)	17.7 to 27.5 {13 to 20, 1.8 to 2.8}	–
Tb	Bolt (case mounting)	2.0 to 3.9 {1.4 to 2.9, 0.2 to 0.4}	–
	Screw (case cover mounting)		
Tc	Cap nut (seat and plate mounting)	4.9 to 5.9 {3.6 to 4.3, 0.5 to 0.6}	–
Td	Nut (adjusting screw retaining)	6.9 to 7.8 {5.1 to 5.8, 0.7 to 0.8}	–
Te	Screw (clamp mounting)	1.0 to 1.5 {0.7 to 1.1, 0.1 to 0.15}	–
Tf	Screw (thermostat mounting)	0.5 to 1.0 {0.4 to 0.7, 0.05 to 0.10}	–
Tg	Heater	19.6 to 29.4 {14 to 22, 2 to 3}	–
Th	Bolt (valve, piston and valve body mounting)	3.9 to 6.9 {2.9 to 5.1, 0.4 to 0.7}	–
Ti	Plug	14.7 to 24.5 {11 to 18, 1.5 to 2.5}	–

Lubricant and/or sealant

Mark	Points of application	Specified lubricant and/or sealant	Quantity
△a	O-ring	Multipurpose grease [NLGI No. 2 (Li soap)]	As required
	Adjusting screw (entire surface except thread)		
	Outer periphery of piston and O-ring groove		
	Body (inside surface)		
△b	Plug thread	ThreeBond 1110B	As required

◆Installation procedure◆

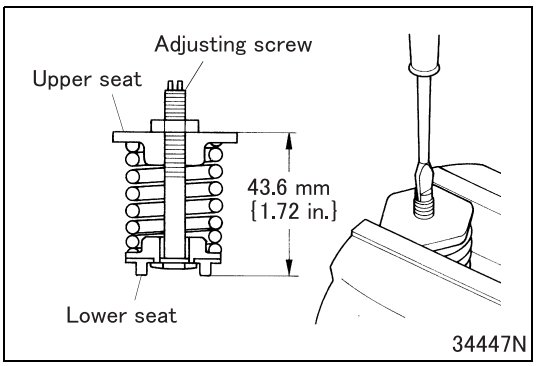

■ **Adjustment: Adjusting screw**

- Turn the adjusting screw to achieve the indicated dimension from the top of the upper spring seat to the bottom of the lower spring seat. Doing so will facilitate the threshold pressure adjustment to the specified value.

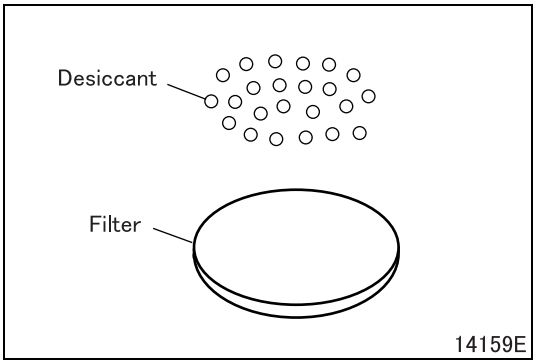

■ **Installation: Filters, desiccant, and filter plate**

- Install the filters with their soft layers facing the desiccant.

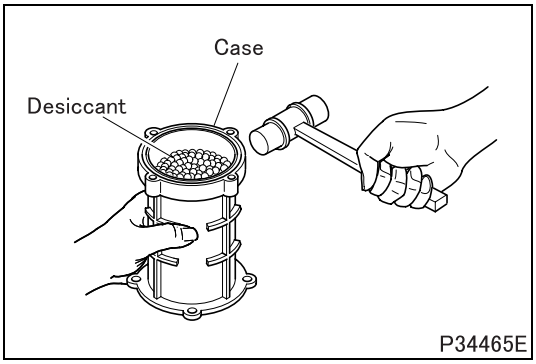

- Place the desiccant in the case, then settle the desiccant by tapping gently and evenly around the case with a plastic hammer.

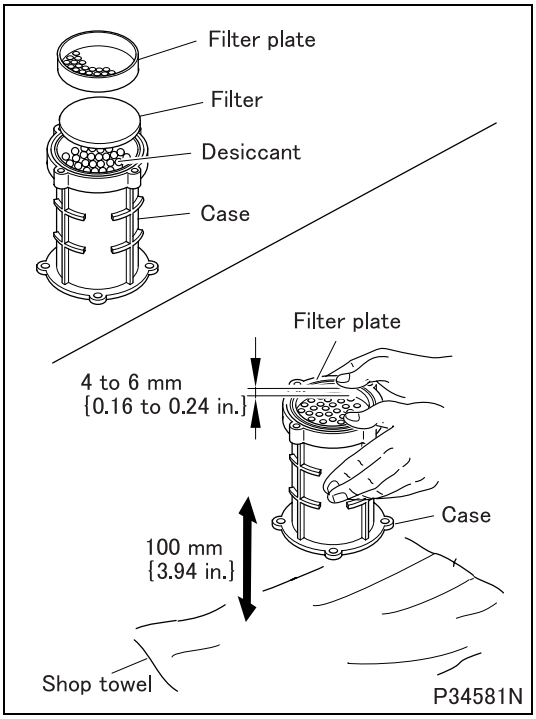

- Place the soft layer side of the filter on the desiccant, and place the filter plate on the case, then tap the desiccant down.

<Tapping>

- Before tapping the case against the work surface, lay two or three layers of shop towel on the work surface to protect the bottom of the case from scratches.
- Holding down the filter plate with both hands, lift the case to a height of about 100 mm {3.94 in.} and tap it gently against the work surface.
- Tap the case about 30 more times. Make sure the filter plate drops by 4 to 6 mm {0.16 to 0.24 in.} from its original position.

WARNING ⚠

- **Unless the tapping procedure is performed, particles of desiccant may escape and create blockages in brake lines, thus preventing normal brake operation.**

◆Inspection after installation◆

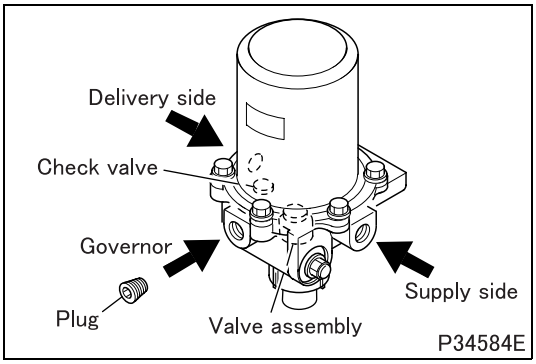

■ Inspection: Air leakage

- Completely plug the delivery side of the air dryer, then apply air pressure of 49 kPa {7.1 psi, 0.5 kgf/cm^2} or 780 kPa {115 psi, 8 kgf/cm^2} to the supply side and check that no air leaks from any joint.
  Leakage from the valve assembly must not exceed 20 cm^3 {1.22 cu.in.} per minute.
- Increase the pressure applied to the supply side to 932 kPa {135 psi, 9.5 kgf/cm^2} to cause purging (regeneration). Check that no air leaks from the check valve and from the air pressure governor (with the plug removed).

CAUTION ⚠

- **If there is air leakage from the air pressure governor or the check valves, charging (pressure filling) and purging (regeneration) will be performed continuously.**

BRAKE PEDAL

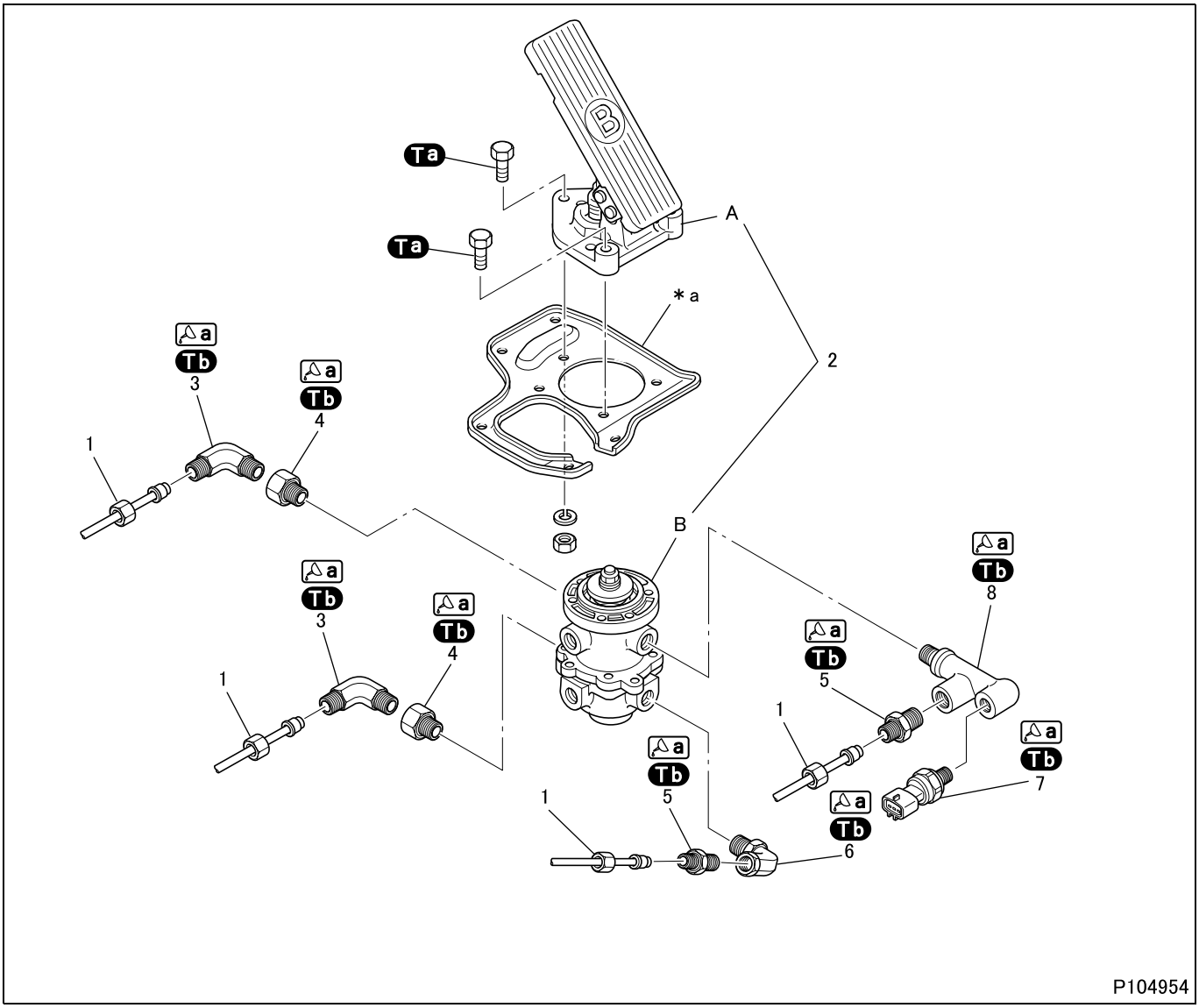

● **Removal sequence**

1 Nylon tube
2 Dual brake valve (See later section.)
3 Connector
4 Connector
5 Connector
6 Connector
7 Air pressure sensor
8 Connector

***a**: Valve board

- Remove pedal A upward from valve board, and valve B downward from the valve board to separate dual brake valve (pedal A and valve B).

● **Installation sequence**

Follow the removal sequence in reverse.

CAUTION ⚠

- **When installing the dual brake valve, use care that the nylon tube will not interfere with other neighboring parts.**

Tightening torque (Unit: N·m {ft.lbs, kgf·m})

Mark	Parts to be tightened	Tightening torque	Remarks
Ta	Bolt (pedal and valve mounting)	11.8 to 18.6 {8.7 to 14, 1.2 to 1.9}	–
	Bolt (pedal and valve board mounting)		
Tb	Connector	39.2 to 117.7 {29 to 87, 4.0 to 12.0}	–
	Air pressure sensor		

Lubricant and/or sealant

Mark	Points of application	Specified lubricant and/or sealant	Quantity
a	Thread of connnector and air pressure sensor	ThreeBond 1110B or Loctite 575	As required

◆Work before removal◆

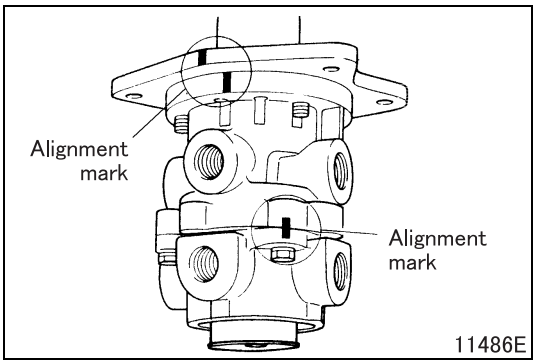

■ **Alignment mark: Dual brake valve**

◆Installation procedure◆

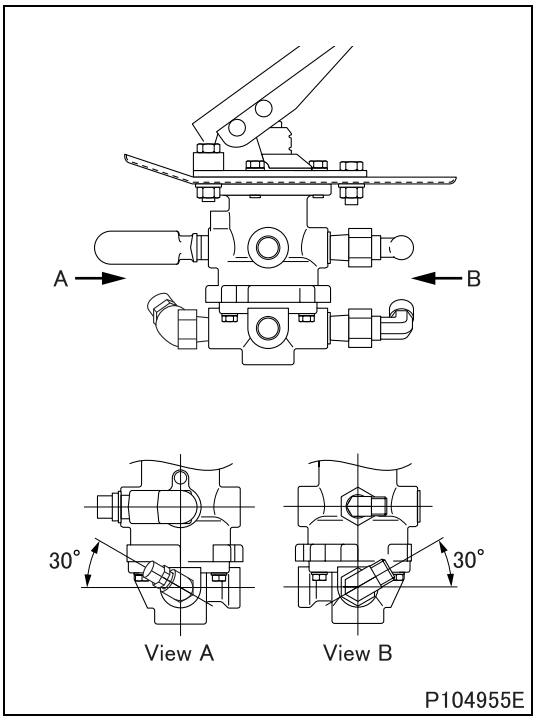

■ **Installation: Connector**

- After tightening each connector to a torque just beyond the lower limit of the specified torque, adjust its direction by turning it within one turn. The installed angles of the connectors must be as shown in the illustration.

DUAL BRAKE VALVE

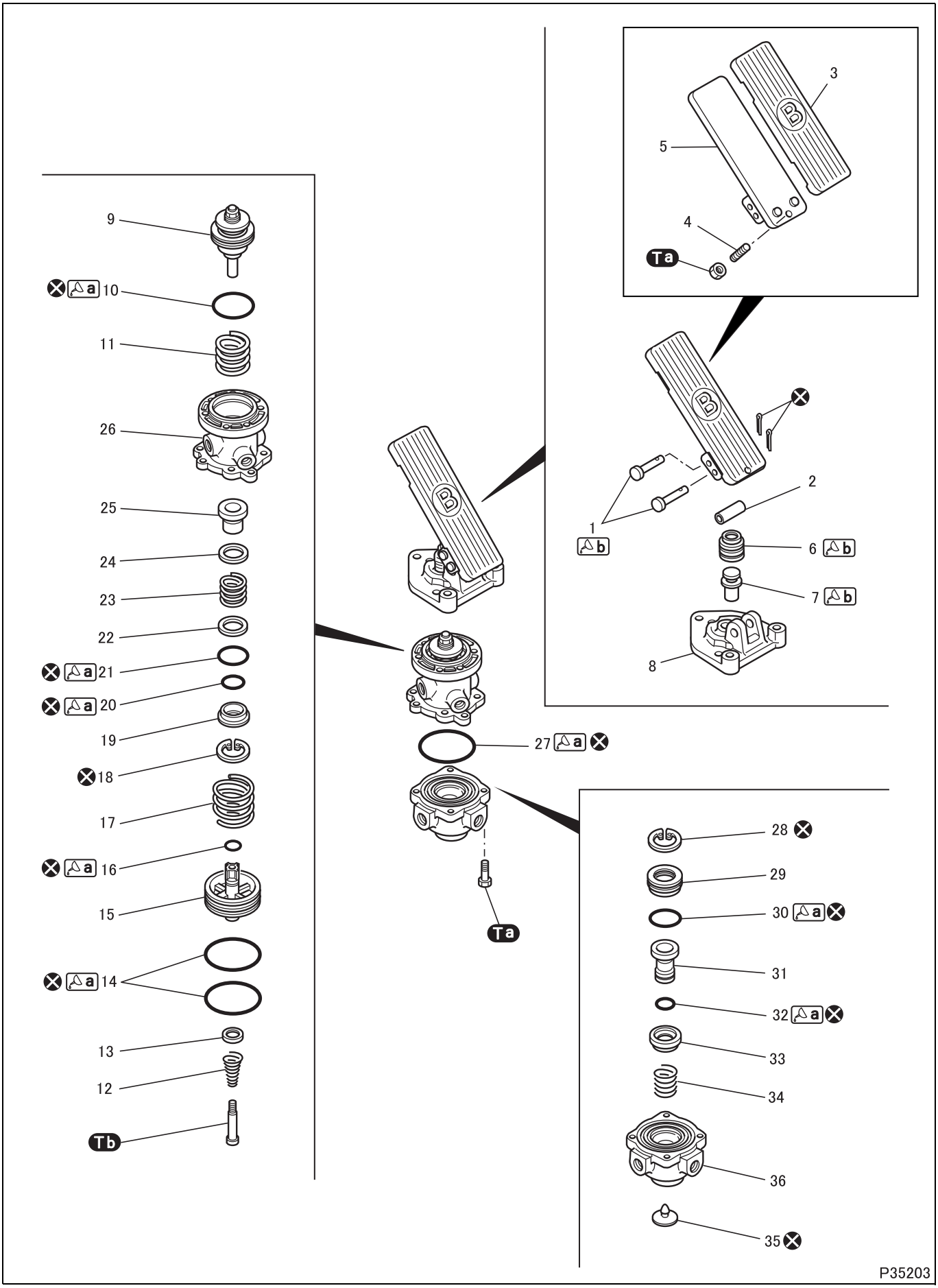

● Disassembly sequence

1 Straight pin
2 Roller
3 Pedal cover
4 Set screw
5 Pedal
6 Boot
7 Plunger
8 Plate
9 Piston
10 O-ring
11 Spring
12 Spring
13 Plate guide
14 O-ring
15 Relay piston
16 O-ring
17 Relay piston spring
18 Retaining ring
19 Retainer
20 O-ring
21 O-ring
22 Washer
23 Valve spring
24 Washer
25 Inlet valve
26 Body
27 O-ring
28 Retaining ring
29 Valve seat
30 O-ring
31 Inlet valve
32 O-ring
33 Valve retainer
34 Valve spring
35 Exhaust cover
36 Cover

⊗: Non-reusable parts

● Assembly sequence

Follow the disassembly sequence in reverse.

Repair kit: Dual brake valve kit

Service standards (Unit: mm {in.})

Location	Maintenance item			Standard value	Limit	Remedy
–	Pressure stroke	Depression angle: 8° Pedal toe: 27 {1.06}	Primary output pressure	0.17 ± 0.03 MPa {24 ± 4.3 psi, 1.7 ± 0.3 kgf/cm^2}	–	Replace
			Pedal depression force	64 ± 18 N {14 ± 4.0 lbs, 6.5 ± 1.8 kgf}		
		Depression angle: 13.5° Pedal toe: 45 {1.77}	Primary output pressure	0.45 ± 0.07 MPa {65 ± 10 psi, 4.6 ± 0.7 kgf/cm^2}		
			Pedal depression force	142 ± 25 N {32 ± 5.6 lbs, 14.5 ± 2.8 kgf}		
		Depression angle: 15.5° ± 1.5° Pedal toe: 52 ± 5 {2.05 ± 0.20}	Primary output pressure	0.7 MPa {100 psi, 7 kgf/cm^2}		
			Pedal depression force	206 ± 20 N {46 ± 4.4 lbs, 21 ± 2 kgf}		
1	Outer diameter of straight pin		Roller mounting	$12\ ^{-0.05}_{-0.10}$ {$0.472\ ^{-0.0020}_{+0.0039}$}	11.90 {0.469}	Replace
2	Roller		Inner diameter	12 {0.472}	12.1 {0.476}	Replace
			Outer diameter	18.3 {0.720}	18.15 {0.715}	
5	Pedal play		Depression angle	$3.5°\ ^{+1.0°}_{-0.5°}$	–	Adjust
			Pedal toe	$12\ ^{+3.0}_{-1.5}$ {$0.472\ ^{+0.12}_{-0.06}$}		
7	Outer diameter of plunger			19.9 {0.783}	19.8 {0.780}	Replace
8	Plate		Inner diameter of straight pin hole	12 {0.472}	12.1 {0.476}	Replace
			Inner diameter of bushing	20 {0.787}	20.1 {0.791}	
11	Spring load (installed length: 19.6 {0.77})			–	112.8 ± 5.9 N {25 ± 1.3 lbs, 11.5 ± 0.6 kgf}	Replace

Location	Maintenance item	Standard value	Limit	Remedy
12	Spring load (installed length: 29.6 {1.17})	–	67.6 ± 6.8 N {15 ± 1.5 lbs, 6.9 ± 0.69 kgf}	Replace
17	Relay piston spring load (installed length: 13.6 {0.54})	–	51 ± 2.9 N {11.5 ± 0.7 lbs, 5.2 ± 0.3 kgf}	Replace
23	Valve spring load (installed length: 13.5 {0.53})	–	40.2 ± 2.0 N {9.0 ± 0.4 lbs, 4.1 ± 0.2 kgf}	Replace
34	Valve spring load (installed length: 13 {0.51})	–	50 ± 2.9 N {11.2 ± 0.7 lbs, 5.1 ± 0.3 kgf}	Replace

Tightening torque (Unit: N·m {ft·lbs, kgf·m})

Mark	Parts to be tightened	Tightening torque	Remarks
Ta	Lock nut	5.0 to 7.8 {3.6 to 5.8, 0.5 to 0.8}	–
	Bolt (valve assembly primary and secondary sides assembling)		
Tb	Screw	2.9 to 5.0 {2.1 to 3.6, 0.3 to 0.5}	–

Lubricant and/or sealant

Mark	Points of application	Specified lubricant and/or sealant	Quantity
a	Sliding surfaces and groove of O-ring, sliding surfaces of metals	Multipurpose grease [NLGI No.2 (Li soap)]	As required
b	Outside periphery of straight pin	High pressure-resistant, high abrasion-resistant grease [NLGI No.2 (Li soap)]	As required
	Sliding surfaces of plunger and other parts		
	Pack between boot and plunger		1 cm^3 {0.061 cu.in.}

Special tools

Mark	Tool name and shape	Part No.	Application
a	Insert tool	*910-24463	Installation of O-ring
b	Retainer	*910-24592	Holding of piston

*: Knorr-Bremse part No.

◆Removal procedure◆

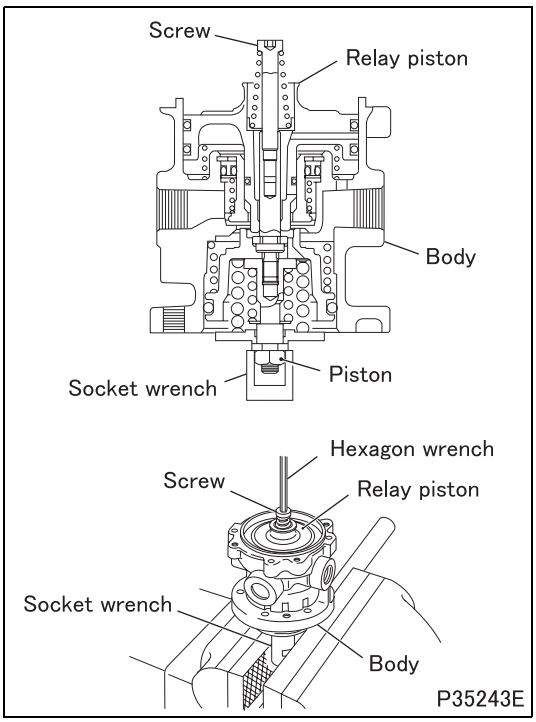

■ **Removal: Relay piston**

- Hold a socket wrench (10 mm {0.39 in.} between the flats) on vise.
- Insert the head of self-locking bolt into socket wrench to tighten body.

CAUTION ⚠

- **You must be careful when you loosen screw, because the spring in body can forcibly eject relay piston. To avoid this hazard, press down on the relay piston with your hand when you carry out the above work.**

- Using a hexagon wrench, slowly loosen the screw and remove the relay piston.
  Hexagon wrench: HEX4

◆Installation procedure◆

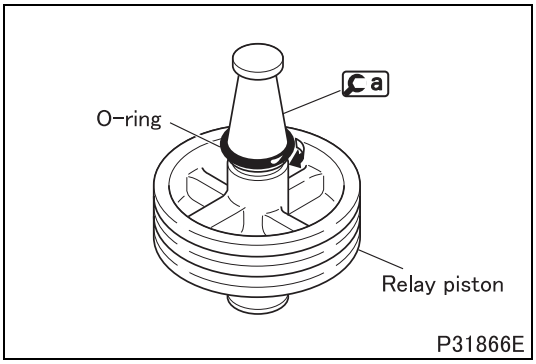

■ **Installation: O-ring**

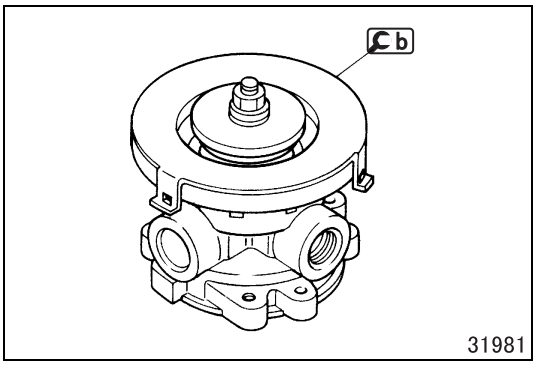

■ **Installation: Piston**

- Install b to prevent the piston from jumping out.
- After installing the body and cover, remove b.

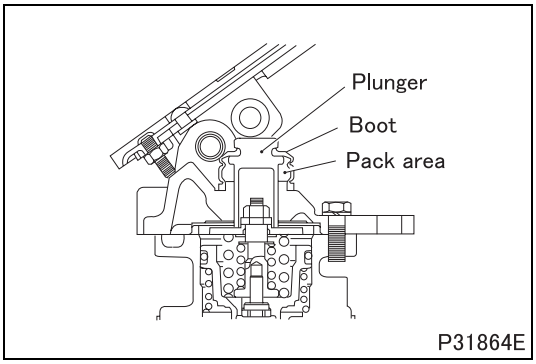

■ **Installation: Packing grease between boot and plunger**

◆**Inspection after installation**◆

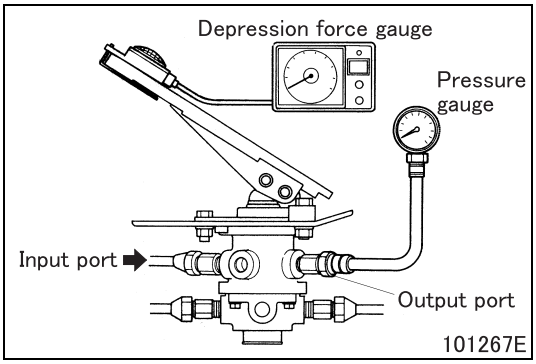

■ **Inspection: Dual brake valve**

- When performing the functional check, check if primary output pressure and pedal depression force relative to the specified pedal depression angles conform to the corresponding standard values.
- Install a pressure gauge capable of measuring a minimum of 0.98 MPa {142 psi, 10 kgf/cm^2} to the primary output port.
- Install a depression force gauge to the brake pedal.
- While applying an air pressure of 0.7 MPa {100 psi, 7 kgf/cm^2} to the primary input port, check for air leakage.
- If air leakage is found, proceed as follows.
  - Retighten the connectors.
  - Disassemble the dual brake valve and check if the O-rings of each part are correctly installed.

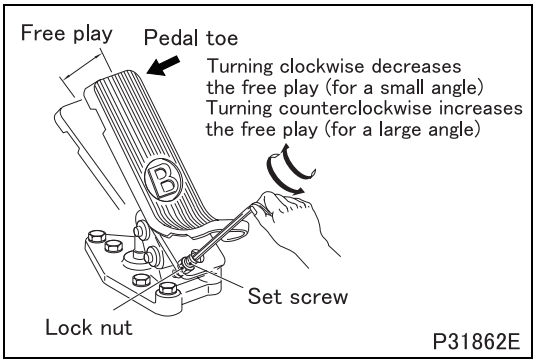

- Using the set screw, adjust the brake pedal play, which is obtained when the pedal tip is pressed by hand, to the standard value.
- Secure the set screw in the correct position by tightening the lock nut to the specified torque.
- Now, while observing the pressure gauges, check if primary output pressure and pedal depression force relative to the specified pedal depression angles conform to the corresponding standard values shown in the input/output characteristic curve diagram.
- If the output pressure is lower than the standard values, replace the piston.

Input/output characteristic curve diagram

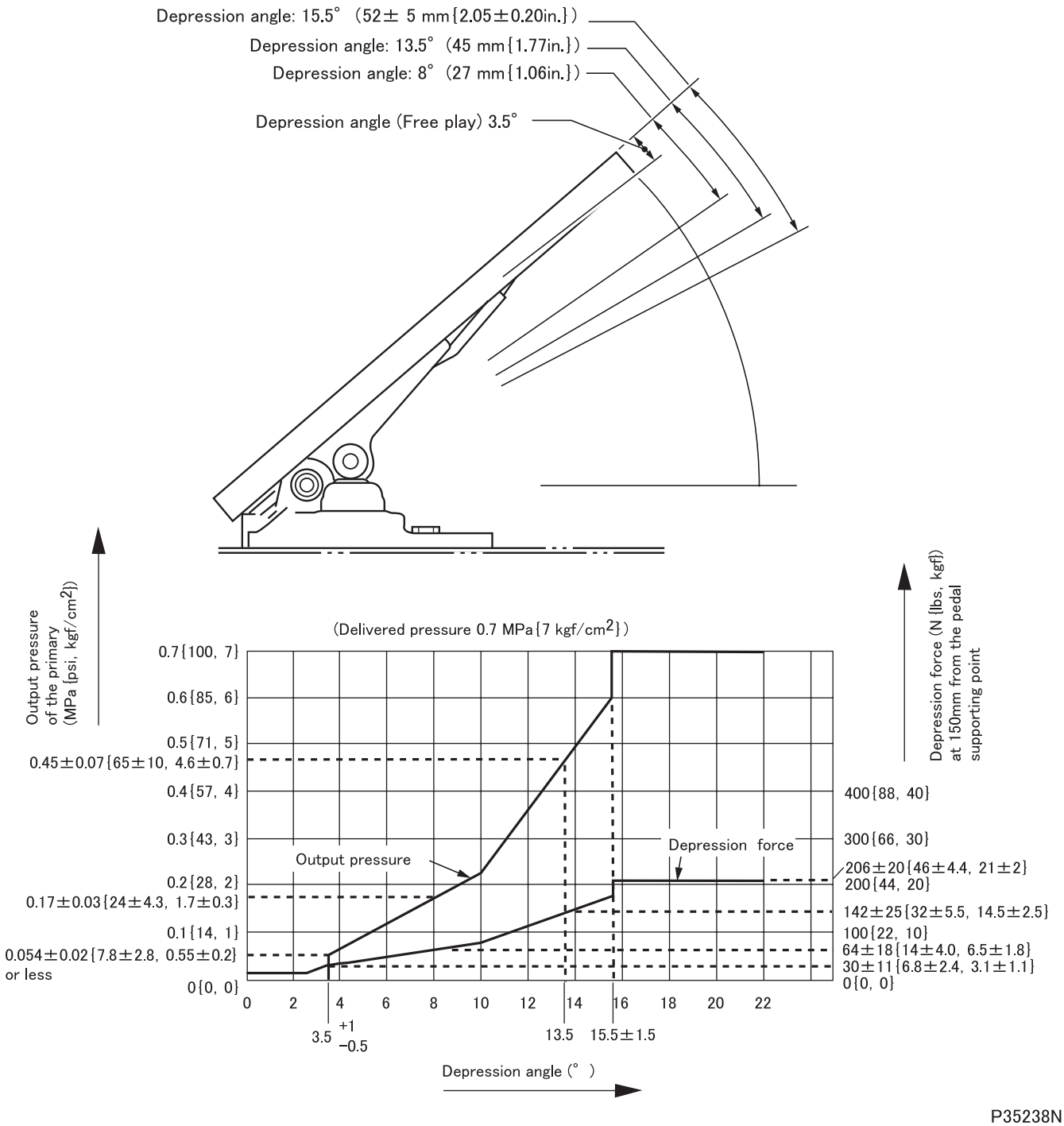

BRAKE BOOSTER

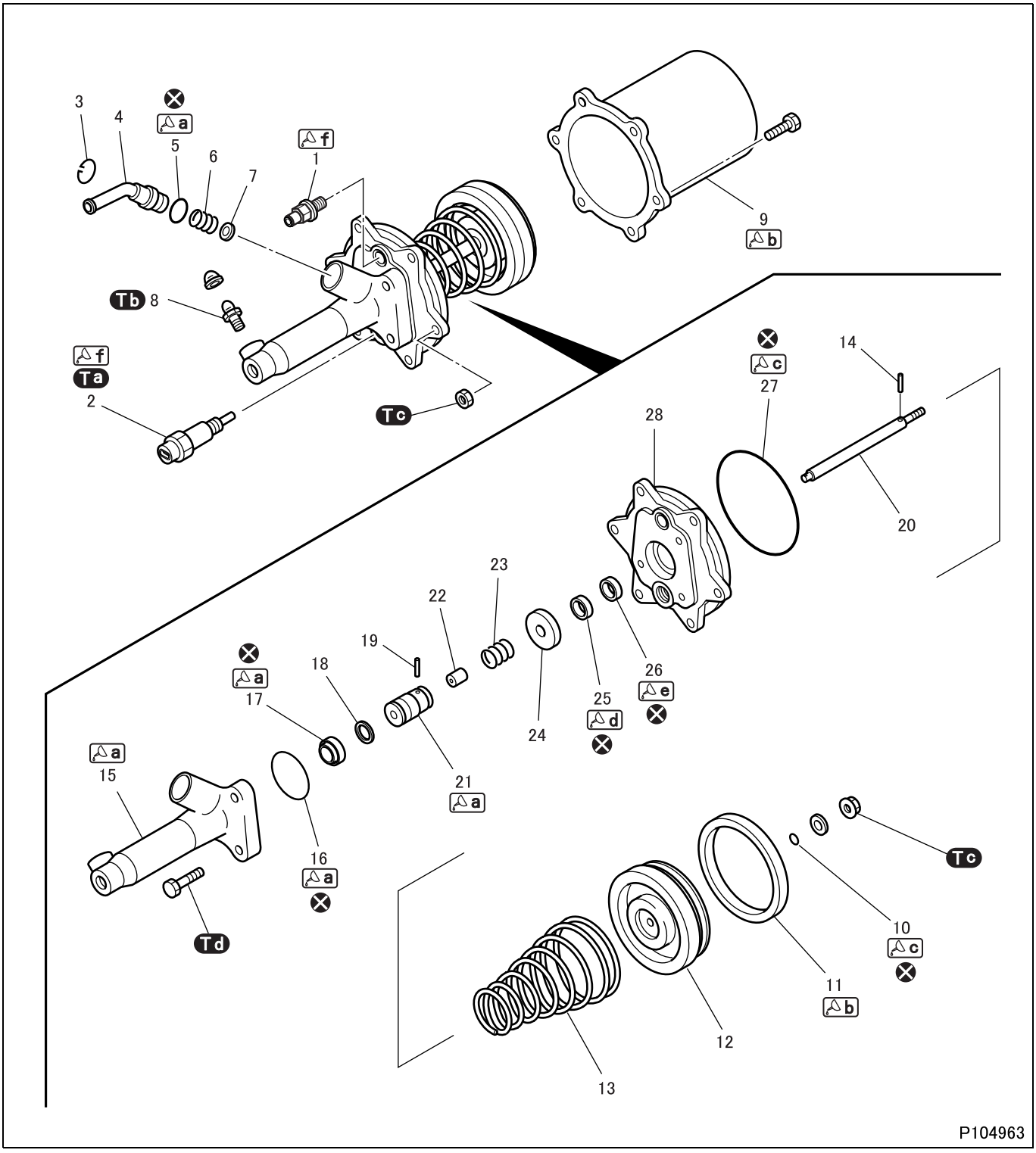

● **Disassembly sequence**

1 Connector
2 Brake booster stroke switch
3 Retaining ring
4 Connector
5 O-ring
6 Spring
7 Valve
8 Air bleeder
9 Cylinder shell
10 O-ring
11 Cup packing
12 Piston plate
13 Return spring
14 Straight pin
15 Hydraulic cylinder
16 O-ring
17 Cup packing
18 Backup ring
19 Straight pin
20 Push rod
21 Hydraulic piston
22 Valve seal
23 Spring
24 Washer
25 Oil seal
26 Oil seal
27 O-ring
28 End plate

⊗: Non-reusable parts

● **Assembly sequence**

Follow the disassembly sequence in reverse.

Repair kit: Brake booster kit

Service standards (Unit: mm {in.})

Location	Maintenance item	Standard value	Limit	Remedy
9, 12	Clearance between cylinder shell and piston plate	0.9 to 1.6 {0.035 to 0.063}	2.0 {0.079}	Replace
13	Return spring load (installed length 132 {5.20})	137.3 ± 20 N {31 ± 4.4 lbs, 14 ± 2 kgf}	107.3 N {24 lbs, 11 kgf}	Replace
15, 21	Clearance between hydraulic cylinder and hydraulic piston	0.04 to 0.11 {0.0016 to 0.0043}	0.2 {0.0079}	Replace
20	Push rod bent	0.05 {0.002} or less	0.15 {0.0059}	Replace

Tightening torque (Unit: N·m {ft.lbs, kgf·m})

Mark	Parts to be tightened	Tightening torque	Remarks
Ta	Brake booster stroke switch	8 to 12 {5.8 to 8.7, 0.8 to 1.2}	–
Tb	Air bleeder	7 to 12 {5.1 to 8.7, 0.7 to 1.3}	–
Tc	Nut (body and cylinder shell mounting)	11 to 15 {8 to 11, 1.1 to 1.6}	–
	Nut (piston plate and push rod mounting)		
Td	Bolt (hydraulic cylinder mounting)	20 to 29 {14 to 22, 2 to 3}	–

Lubricant and/or sealant

Mark	Points of application	Specified lubricant and/or sealant	Quantity
a	O-ring	Brake fluid (SAE J1703 or FMVSS No. 116, DOT3)	As required
	Entire surface of cup packing and sliding surfaces of hydraulic piston and cylinder		
b	Inside surface of cylinder shell	Multipurpose grease [NLGI No.2 (Li soap)]	10 g {0.35 oz}
	Entire surface of cup packing		5 g {0.18 oz}
c	O-ring	Multipurpose grease [NLGI No.2 (Li soap)] or Silicone grease	As required
d	Entire surface of oil seal	Silicone oil	As required
e	Pack into oil seal groove	Silicone grease	As required
f	Threads of connector	ThreeBond 1213 or 1207D	As required
	Threads of brake booster stroke switch		

Special tools

Mark	Tool name and shape	Part No.	Application
a	Stand	*910-00450	Working bench
b	Holder	*910-24831	Removal and installation of piston plate
c	Cup insert guide	*910-23295	Installation of cup packing
d	Puller	*910-20350	Removal of oil seal
e	Press-fit bar	*910-20195	Installation of oil seal
f	Portable tester	*910-00021	Functional check after assembly

*: Knorr-Bremse part No.

◆Removal procedure◆

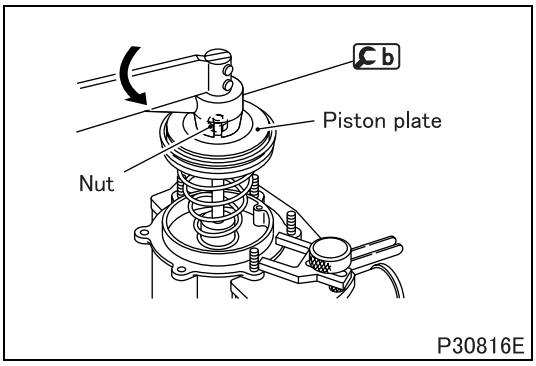

■ **Removal: Piston plate**

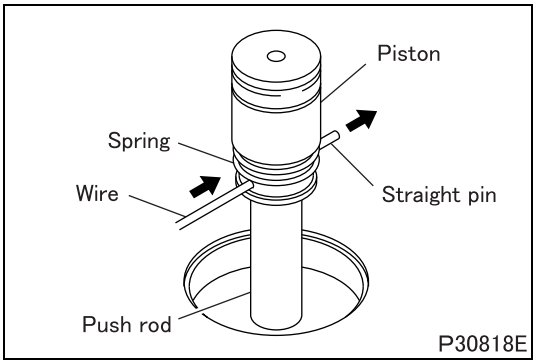

■ **Removal: Hydraulic piston**

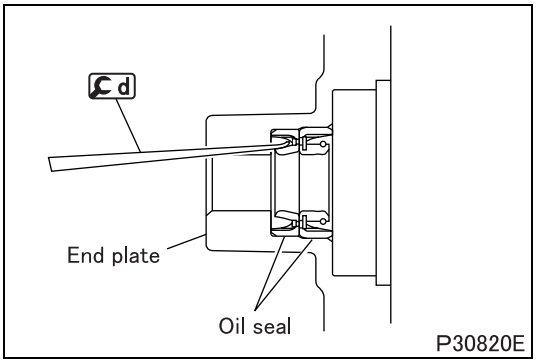

■ **Removal: Oil seal**

CAUTION ⚠

- **Remove the oil seals by tapping them evenly while taking care not to damage the inner surface of the end plate.**

◆Installation procedure◆

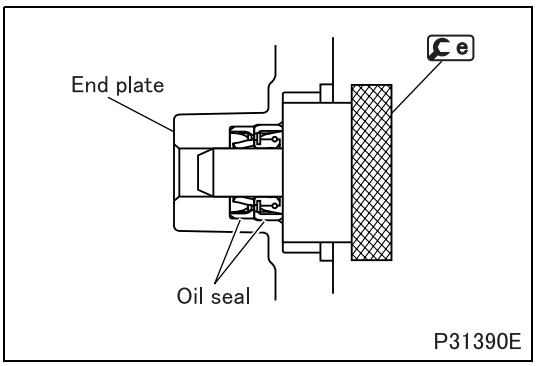

■ **Installation: Oil seal**

- Install each oil seal on the end plate in the illustrated direction.

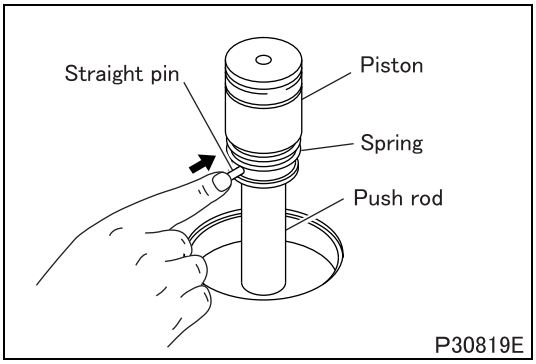

■ **Installation: Hydraulic piston**

- Align the holes of the hydraulic piston, valve seal and push rod before inserting the straight pin.
- After inserting the straight pin, make sure that the hydraulic piston spring is hanging over the straight pin and working as a stopper.

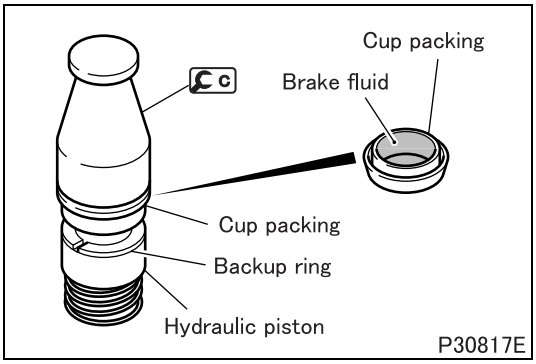

■ **Installation: Cup packing**

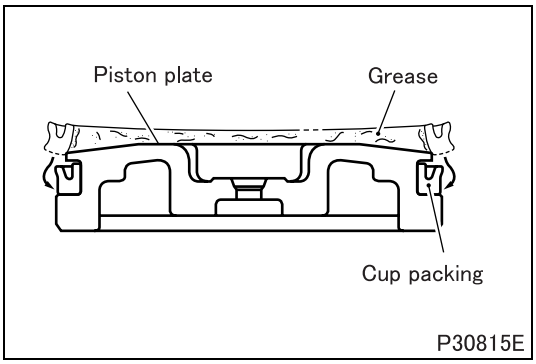

■ **Installation: Cup packing**

- Apply grease to the entire surface of the cup packing before installing it as shown in the illustration.

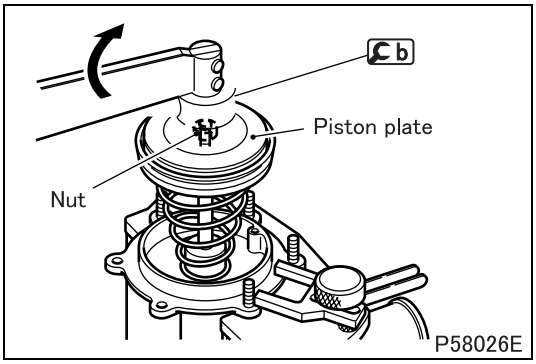

■ **Installation: Piston plate**

- Tighten the nut to the specified torque while pressing the piston plate fully towards the end plate.

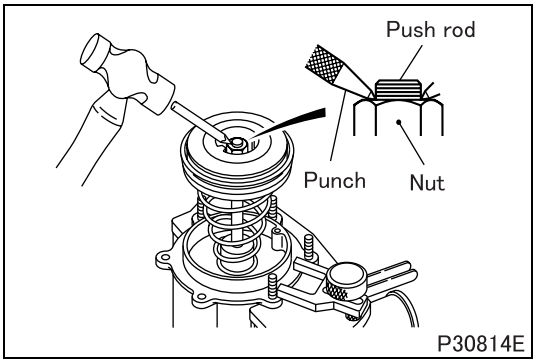

- After tightening the nut at specified torque, caulk the nut and push rod thread area.

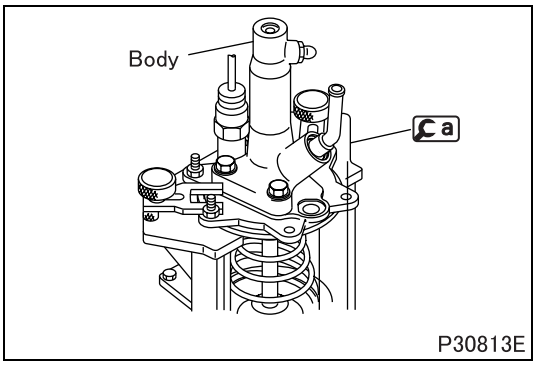

■ **Installation: Body**

◆Inspection after installation◆

■ Installation: Brake booster

- With the brake booster installed on the vehicle, check if the booster operates correctly using [f].
- Installing pressure gauges
  - Install the air pressure gauge (PG4) onto the air supply port on the power cylinder.
  - Remove the air bleeder from the hydraulic cylinder, and connect the oil pressure gauge (PG2). Bleed the tester of air.
- Set the air tank pressure at 830 kPa {120 psi, 8.5 kgf/cm^2}. With the engine stationary, carry out the following tests.

Test	Test condition	Standard value	Limit	Remedy
Air tightness under full load	Air pressure drop at 15 sec. after brake pedal is fully pressed	10 kPa {1.5 psi, 0.1 kgf/cm^2} or less	60 kPa {8.7 psi, 0.6 kgf/cm^2} or less on air pressure gauge (PG4)	Replace defective part(s) (O-ring, cup packing, etc.)
Operation under full load	At air pressure reading of 930 kPa {135 psi, 9.5 kgf/cm^2} (PG4) with brake pedal fully pressed	Oil pressure gauge (PG2) 23.8 ± 0.7 MPa {3440 ± 100 psi, 242 ± 7 kgf/cm^2}	–	Replace defective part(s) (hydraulic piston, cup packing, etc.)
Brake booster starting pressure	At surge in oil pressure reading (PG2) as brake pedal is gradually pressed	Air pressure gauge (PG4) 24 ± 10 kPa {3.5 ± 1.5 psi, 0.2 ± 0.1 kgf/cm^2}	–	Replace defective part(s) (valve seal, cup packing, etc.)
Residual pressure	With brake pedal pressed, then released	Oil pressure gauge (PG2) 80 to 130 kPa {12 to 19 psi, 0.8 to 1.3 kgf/cm^2}	Oil pressure gauge (PG2) 60 to 150 kPa {8.7 to 110 psi, 0.6 to 15 kgf/cm^2}	Replace defective part(s) (valve, spring, etc.)

- After the above tests are completed, check the brake booster stroke switch for correct operation.
  - With the air bleeder loosened to allow fluid leakage, press the brake pedal to move the power piston full stroke in order to actuate the brake booster stroke switch. The brake warning lamp on the meter cluster should illuminate.
  - After the brake booster functional tests are completed, bleed the brake system of air and add brake fluid to the “H” mark on the fluid tank. (See “ON-VEHICLE INSPECTION AND ADJUSTMENT”.)

FLUID TANK

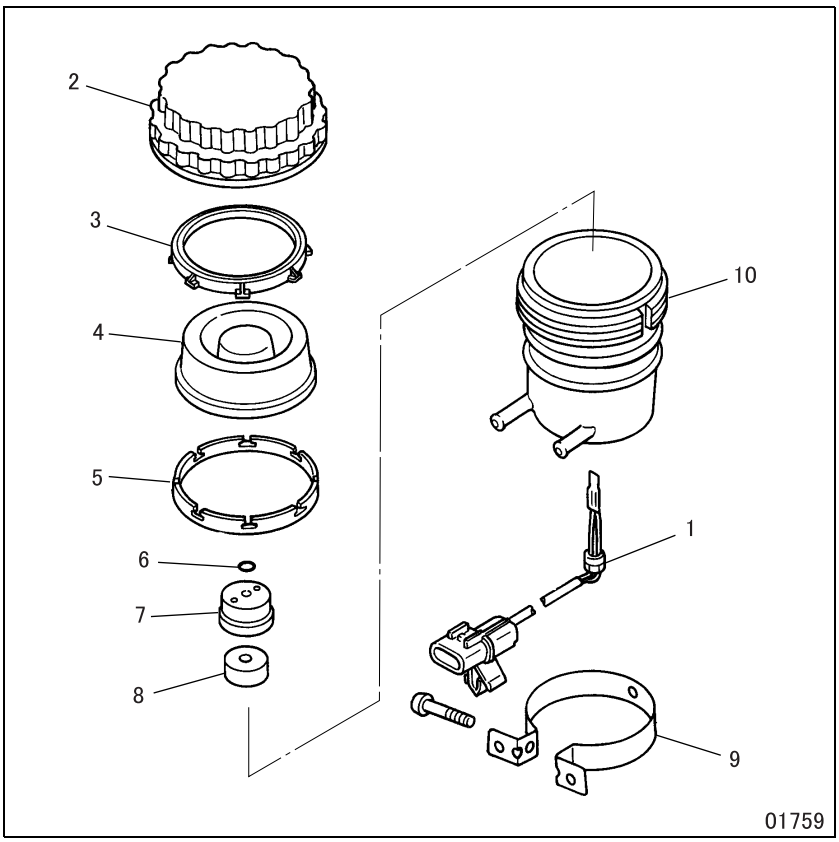

● Disassembly sequence

1 Fluid level switch
2 Cap
3 Slide ring
4 Diaphragm
5 Ring cover
6 Stopper ring
7 Float stopper
8 Float
9 Fluid tank bracket
10 Tank

● Assembly sequence

Follow the disassembly sequence in reverse.

◆Installation procedure◆

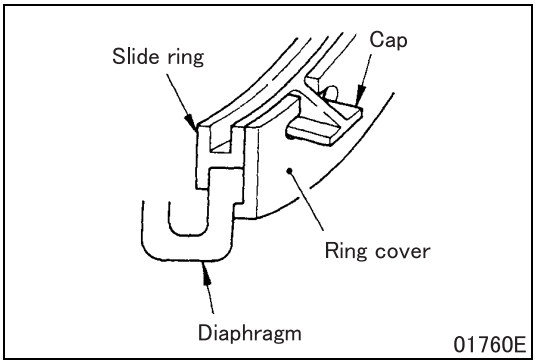

■ Installation: Slide ring, diaphragm

- Engage the slide ring hook firmly onto the ring cover. Ensure that the diaphragm is installed correctly, as shown in the illustration.

M E M O

FRONT WHEEL BRAKE

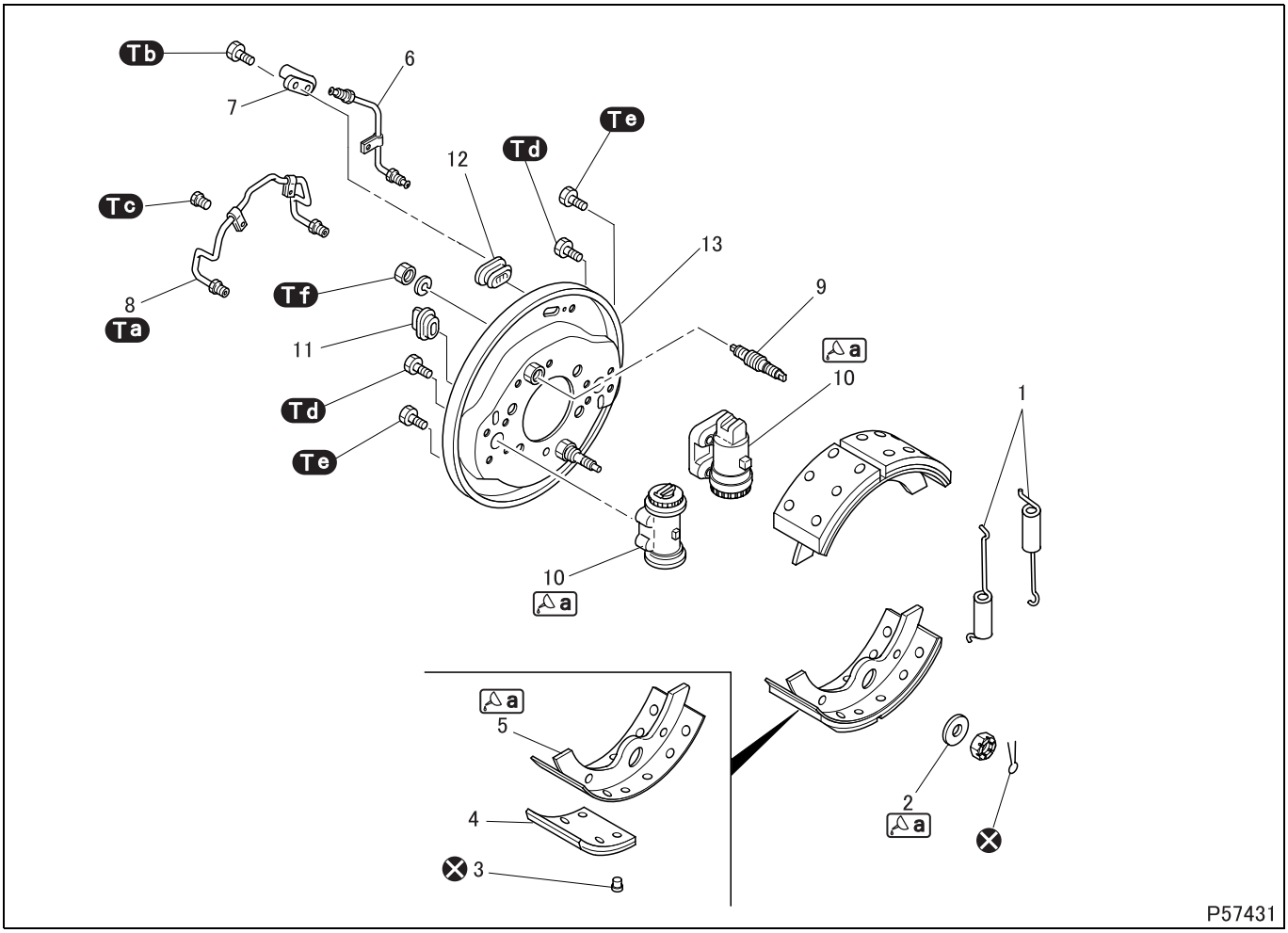

- For removal and installation of the front drum brake, see Gr26A.

● Disassembly sequence

1 Return spring
2 Washer
3 Rivet
4 Brake lining
5 Brake shoe
6 Brake pipe
7 Joint
8 Brake pipe
9 Holder pin
10 Wheel cylinder (See later section.)
11 Adjusting hole plug
12 Inspection hole plug
13 Backing plate

⊗: Non-reusable parts

CAUTION ⚠

- **Do not turn or remove the holder pins unless required. Doing that can alter the installed squareness of the brake shoes, resulting in brake drag. If the pins are removed, be sure to adjust them after reassembly.**

● Assembly sequence

Follow the disassembly sequence in reverse.

Repair kit: Brake lining kit

CAUTION ⚠

- **To prevent poor working of the brake, do not smear the surface of the brake lining with grease or oil.**
- **After reassembly, make the initial adjustment of the brake drum-to-shoe clearance. (See "ON-VEHICLE INSPECTION AND ADJUSTMENT".)**

Service standards (Unit: mm {in.})

Location	Maintenance item	Standard value	Limit	Remedy
1	Return spring load (installed length 192 {7.6})	460 ± 39 N {340 ± 29 lbs, 47 ± 4 kgf}	Clearance between coils or coil and cover	Replace
4	Brake lining thickness	12 {0.47}	5 {0.20} (side step shows wear limit)	Replace

Tightening torque (Unit: N·m {ft.lbs, kgf·m})

Mark	Parts to be tightened	Tightening torque	Remarks
Ta	Brake pipe	13.7 ± 2.0 {10 ± 1.5, 1.4 ± 0.2}	–
Tb	Bolt (joint mounting)	9.8 ± 2.0 {7.2 ± 1.5, 1.0 ± 0.2}	–
Tc	Bolt (pipe clamp mounting)	4.9 ± 1.0 {3.6 ± 0.74, 0.5 ± 0.1}	–
Td	Bolt (wheel cylinder mounting)	44.1 ± 8.8 {33 ± 6.5, 4.5 ± 0.9}	–
Te	Bolt (wheel cylinder mounting)	78 ± 16 {58 ± 12, 8.0 ± 1.6}	–
Tf	Nut (holder pin mounting)	29.4 ± 5.9 {22 ± 4.4, 3.0 ± 0.6}	–

Lubricant and/or sealant

Mark	Points of application	Specified lubricant and/or sealant	Quantity
a	Contact areas between washer and brake shoe	Wheel bearing grease [NLGI No.2 (Li soap)]	As required
	Contact areas between brake shoe and wheel cylinder		

◆Removal procedure◆

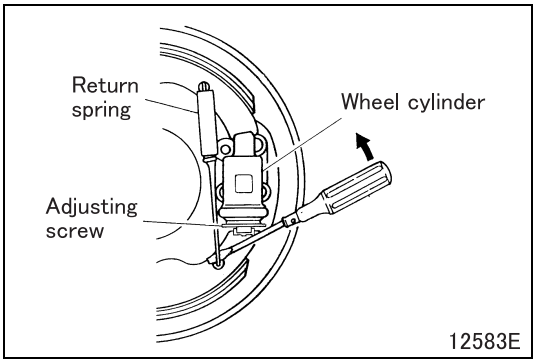

■ Removal: Return spring

- Using a flat-head screwdriver, remove the return spring. To do this, rest the screwdriver on the wheel cylinder adjusting screw. Then, with the adjusting screw as a fulcrum, engage the screwdriver with the spring hook and pry away the spring.

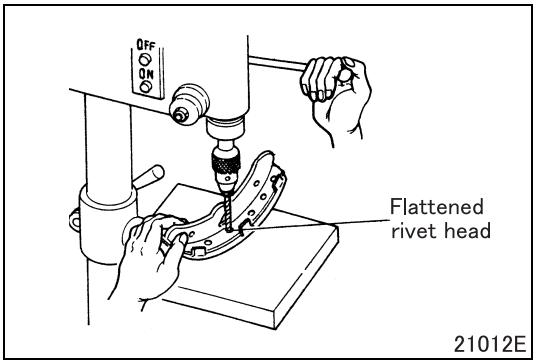

■ Removal: Brake lining

- Using a drilling machine, break the flattened rivet heads on the brake shoe side to release the brake lining.

◆Inspection procedure◆

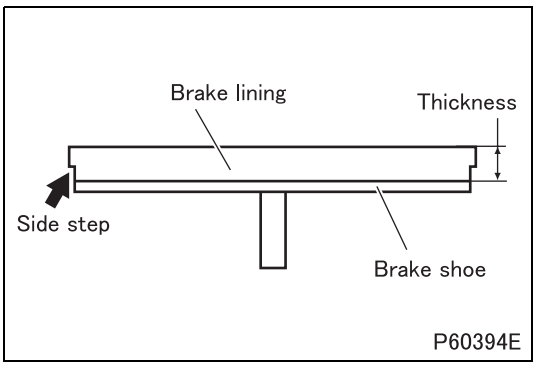

■ Inspection: Brake lining thickness

- If the brake lining is worn down to the side step, replace all brake linings on that axle.

◆Installation procedure◆

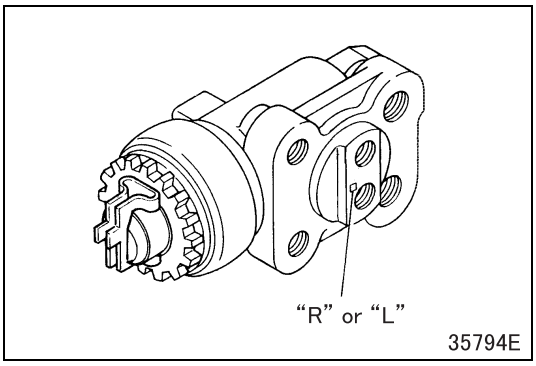

■ Installation: Wheel cylinder

"R": Right-hand side wheel
"L": Left-hand side wheel

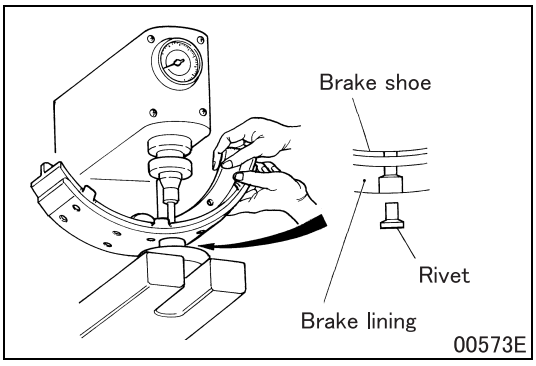

■ Installation: Brake lining

- Using cleaning fluid, clean the brake shoe surface to which the brake lining is to be mounted. Then, dry the shoe surface.
- Insert rivets from the brake lining to the shoe. Stake them, starting from the center of the shoe towards the ends. Ensure that the shoe-to-lining clearance conforms to the following values.
  - Around the rivets (within ϕ20 mm {0.79 in.}): 0.05 mm {0.0020 in.} or less
  - Except around the rivets: 0.2 mm {0.0079 in.} or less
  - The staking load for the rivets should be 22 ± 0.98 kN {4950 ± 220 lbs, 2200 ± 100 kgf}.

CAUTION ⚠

- **New replacement brake linings that are to be installed on the same axle should all be in the same size and have the same identification mark. Otherwise, braking performance can be different from left to right.**

- After assembly, check the brake drum-to-lining clearance. Correct as required.

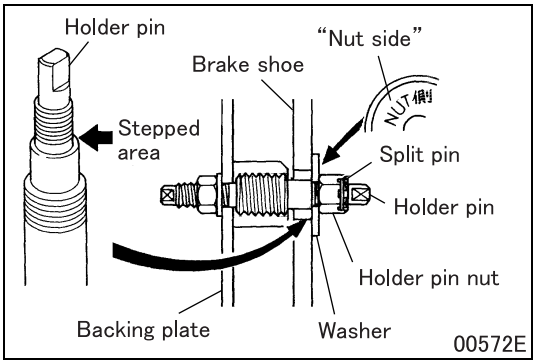

■ **Installation: Brake shoe**

- Install the brake shoe.
- Insert the washer with the stamped word "NUT side" facing away from the brake shoe. Tighten the holder pin nut until the washer is slightly against the stepped area on the holder pin. Back off the holder pin nut between 0 to 60° until the first split pin holes in the nut and holder pin align with each other.
- Insert the split pin through the hole and bend it over.

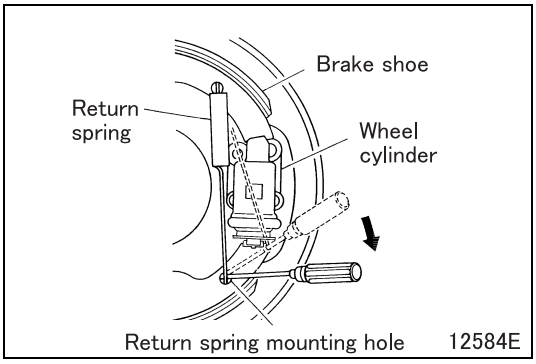

■ **Installation: Return spring**

- Install the shorter hook of the return spring onto the brake shoe which is on the opposite side from the wheel cylinder adjuster.
- Hook up a small Phillips screwdriver tip to the longer hook of the return spring of the brake shoe assembly and install the return spring using the screwdriver like a prying lever.

◆Adjustment after installation◆

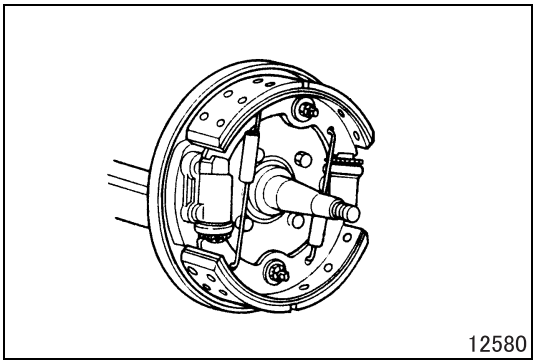

■ **Adjustment: Holder pin**

- Install the front wheel brake onto the front axle. (See Gr26A.)

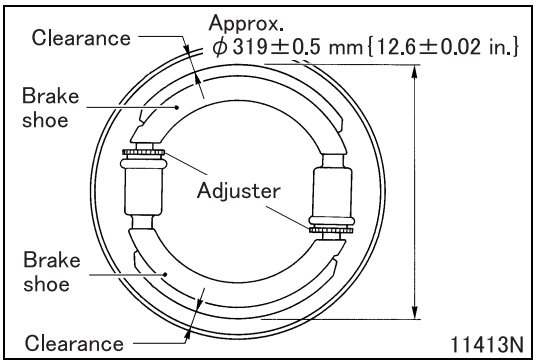

- Turn the adjuster until the distance between the brake shoes, indicated in the illustration, is obtained.
- Adjust the brake shoe-to-drum clearance evenly across by moving the brake shoe.

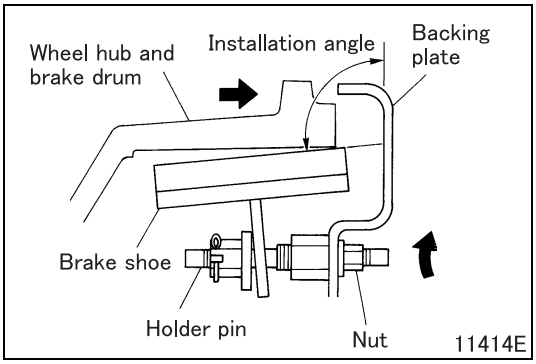

- Secure the wheel hub and brake drum onto the front wheel brake. (See Gr26A.)
  If the installation angle exceeds 90°, the wheel hub and brake cannot be installed correctly. If this is the case, loosen the nut while turning the holder pin in order to bring the installation angle as much close to 90° as possible.

- Bleed the brake system of air.
  (See “ON-VEHICLE INSPECTION AND ADJUSTMENT”.)

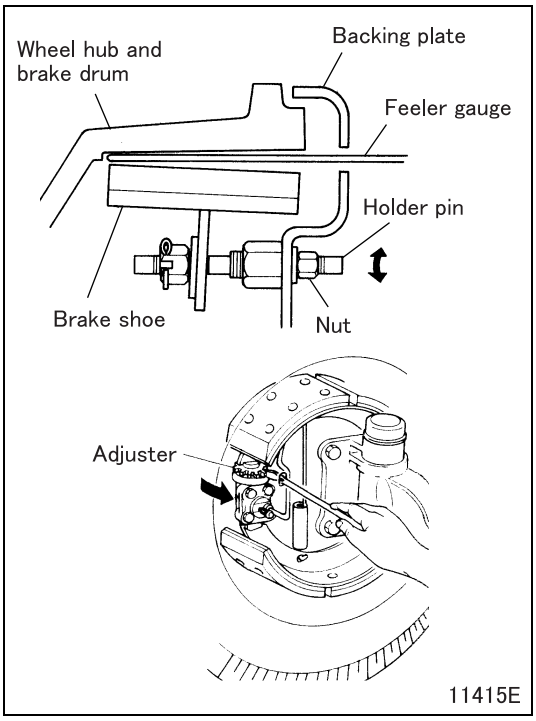

★• Expand the brake shoe towards the brake drum by turning the adjuster until it takes a reasonable force to insert a 0.2 mm feeler gauge between the brake drum and lining and out.
★• Loosen the nut and turn the holder pin clockwise or counterclockwise until the feeler gauge can be inserted and out with a slight resistance.
- Repeat the above steps, shown with ★, until it takes a reasonable force to insert the feeler gauge between the brake drum and lining and out.
- Lightly press the brake pedal a couple of times to regain the even drum-to-lining clearance obtained earlier.
- Repeat the above steps, shown with ★, until it takes a reasonable force to insert the feeler gauge between the brake drum and lining and out.

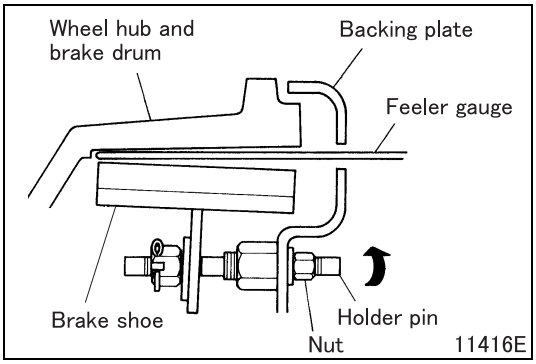

- When it takes a reasonable force to insert the feeler gauge between the brake drum and lining and out, this is because the feeler gauge is in contact with the entire width of the brake shoe.
- Now, pull out the feeler gauge. Then, with the feeler gauge inserted again, turn the holder pin until it takes a substantial force to remove and insert the feeler gauge across the entire width of the brake shoe.
- Tighten the nut to the specified torque.

Wheel cylinder

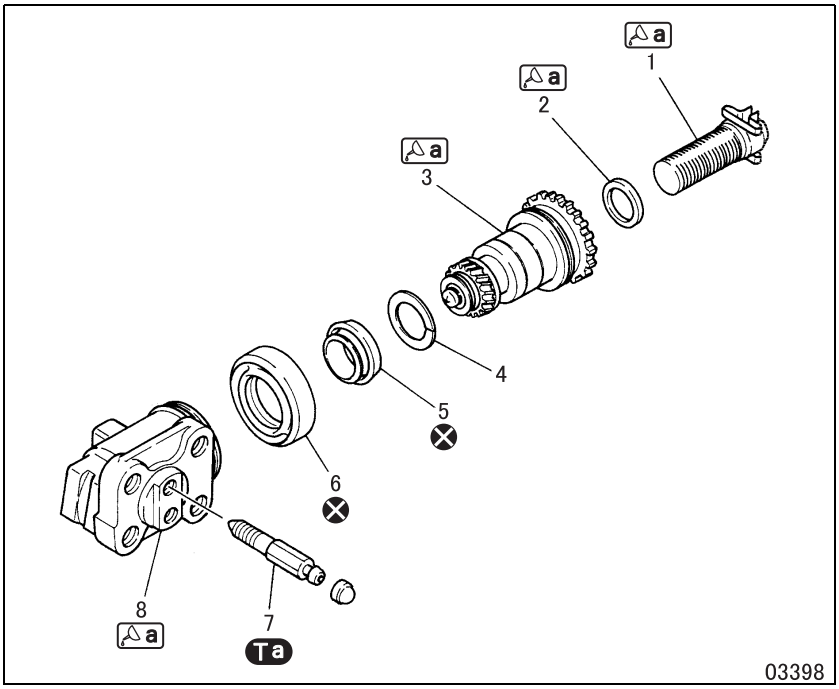

● **Disassembly sequence**

1 Screw
2 Seal
3 Piston
4 Backup ring
5 Piston cup
6 Boot
7 Air bleeder (only for the rear side)
8 Body

⊗: Non-reusable parts

● **Assembly sequence**

Follow the disassembly sequence in reverse.

Repair kit: Wheel cylinder kit

Service standards (Unit: mm {in.})

Location	Maintenance item	Standard value	Limit	Remedy
3, 8	Clearance between piston and body	0.03 to 0.09 {0.0012 to 0.0035}	0.2 {0.0079}	Replace

Tightening torque (Unit: N·m {ft.lbs, kgf·m})

Mark	Parts to be tightened	Tightening torque	Remarks
Ta	Air bleeder	9.8 ± 2.0 {7.2 ± 1.5, 1.0 ± 0.2}	–

Lubricant and/or sealant

Mark	Points of application	Specified lubricant and/or sealant	Quantity
a	Thread area of screw	Rubber grease	As required
	Outer periphery of seal		
	Outer periphery and boots installation groove		
	Inside surface of the body and boot installation groove		

Special tools (Unit: mm {in.})

Mark	Tool name and shape	Part No.	Application
a	Piston cup guide A: ϕ41 {1.61}, B: 50 {1.97} 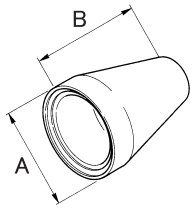	MK356233	Installation of piston cup

◆Installation procedure◆

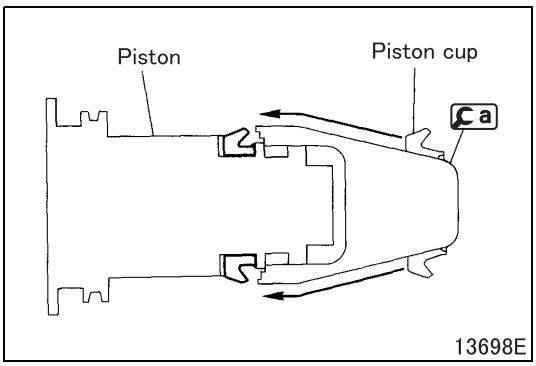

■ **Installation: Piston cup**

- Using a, install the piston cup as shown in the illustration.

CAUTION ⚠

- **Install the piston cup correctly, facing it as shown in the illustration, in order to prevent poor braking performance and brake fluid leakage.**

M E M O

REAR WHEEL BRAKE

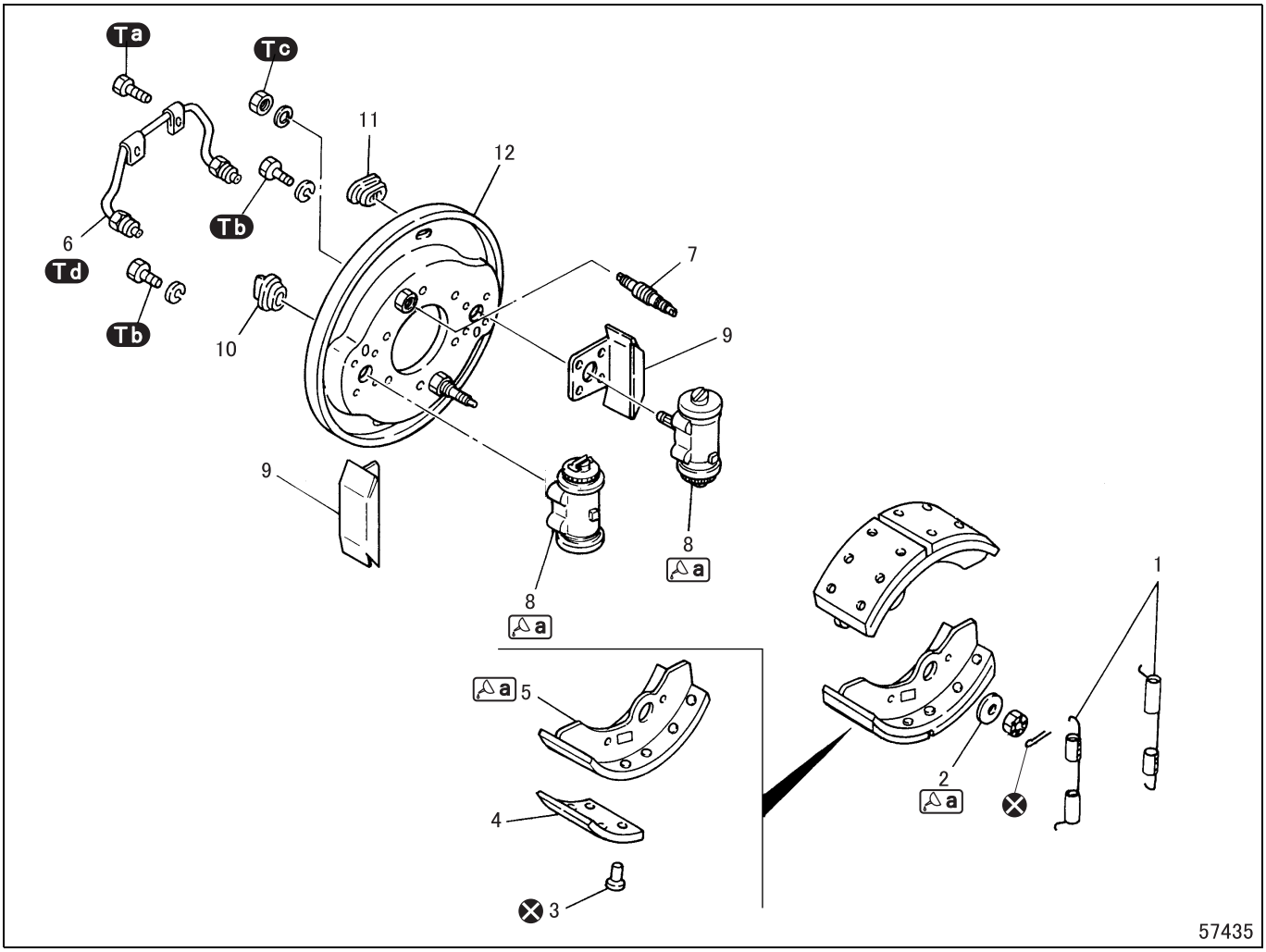

- For removal and installation of the rear drum brake, see Gr27.

● Disassembly sequence

1 Return spring
2 Washer
3 Rivet
4 Brake lining
5 Brake shoe
6 Brake pipe
7 Holder pin
8 Wheel cylinder (See later section.)
9 Wheel cylinder cover
10 Adjusting hole plug
11 Inspection hole plug
12 Backing plate

⊗: Non-reusable parts

CAUTION ⚠

- **Do not turn holder pins or exert strong force on them. Otherwise, brake drag may result.**

● Assembly sequence

Follow the disassembly sequence in reverse.

Repair kit: Brake lining kit

CAUTION ⚠

- **To prevent poor working of the brake, do not smear the surface of the brake lining with grease or oil.**
- **After reassembly, make the initial adjustment of the brake drum-to-shoe clearance. (See "ON-VEHICLE INSPECTION AND ADJUSTMENT".)**

Service standards (Unit: mm {in.})

Location	Maintenance item	Standard value	Limit	Remedy
1	Return spring load (installed length 217 {8.54})	530 ± 49 N {120 ± 36 lbs, 54 ± 5 kgf}	Clearance between coils, or coil and cover	Replace
4	Brake lining thickness	12.9 {0.51}	5 {0.20} (side shoulder means wear limit)	Replace

Tightening torque (Unit: N·m {ft.lbs, kgf·m})

Mark	Parts to be tightened	Tightening torque	Remarks
Ta	Bolt (pipe clamp mounting)	4.9 ± 1.0 {3.6 ± 0.74, 0.5 ± 0.1}	–
Tb	Bolt (wheel cylinder mounting)	78 ± 16 {58 ± 12, 8.0 ± 1.6}	–
Tc	Nut (holder pin mounting)	29 ± 5.9 {21 ± 4.4, 3.0 ± 0.6}	–
Td	Brake pipe	14 ± 2.0 {10 ± 1.5, 1.4 ± 0.21}	–

Lubricant and/or sealant

Mark	Points of application	Specified lubricant and/or sealant	Quantity
a	Brake shoe contact surfaces with washer	Wheel bearing grease [NLGI No.2 (Li soap)]	As required
	Brake shoe contact surfaces with wheel cylinder		

◆Removal procedure◆

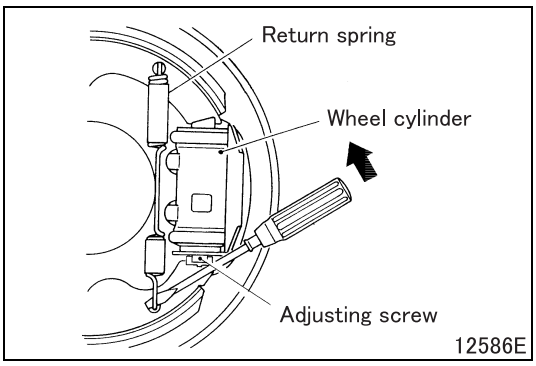

■ Removal: Return spring

- Using a flat-head screwdriver, remove the return spring. To do this, rest the screwdriver on the wheel cylinder adjusting screw. Then, with the adjusting screw as a fulcrum, engage the screwdriver with the spring hook and pry away the spring.

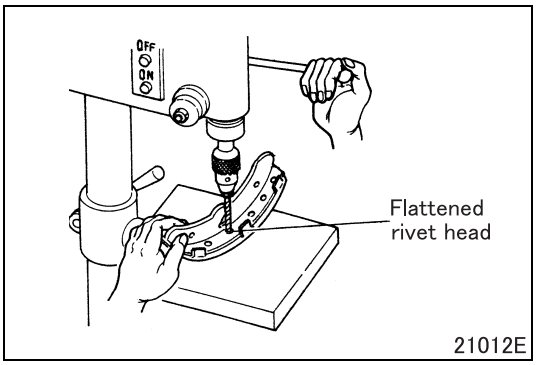

■ Removal: Brake lining

- Using a drilling machine, break the flattened rivet heads on the brake shoe side to release the brake lining.

◆Inspection procedure◆

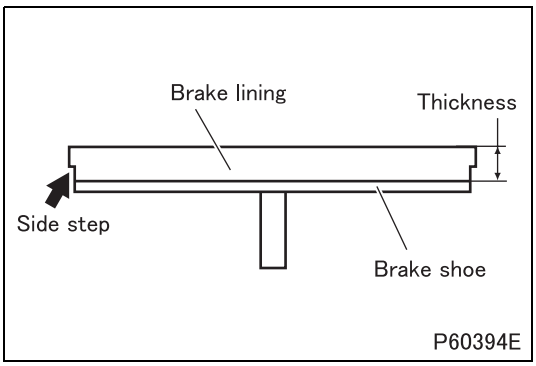

■ **Inspection: Brake lining thickness**

- If the brake lining is worn down to the side step, replace all brake linings on that axle.

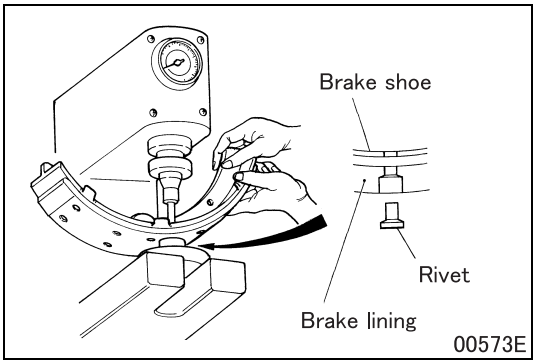

■ **Installation: Brake lining**

- Using cleaning fluid, clean the brake shoe surface to which the brake lining is to be mounted. Then, dry the shoe surface.
- Insert rivets from the brake lining to the shoe. Stake them, starting from the center of the shoe towards the ends. Ensure that the shoe-to-lining clearance conforms to the following values.
  - Around the rivets (within ϕ20 mm {0.0079 in.}): 0.05 mm {0.0020 in.} or less
  - Except around the rivets: 0.2 mm {0.0079 in.} or less
  - The staking load for the rivets should be 22 ± 0.98 kN {4950 ± 220 lbs, 2200 ± 100 kgf}.

CAUTION ⚠

- **New replacement brake linings that are to be installed on the same axle should all be in the same size and have the same identification mark. Otherwise, braking performance can be different from left to right.**

- After assembly, check the brake drum-to-lining clearance. Correct as required.

◆Installation procedure◆

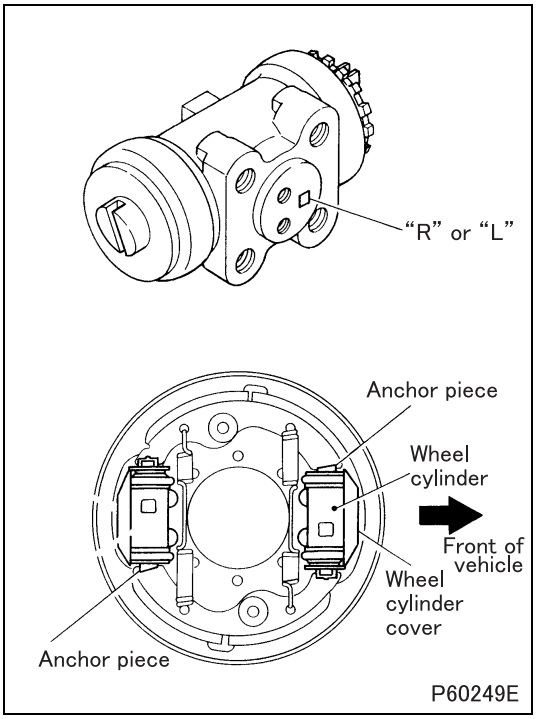

■ **Installation: Wheel cylinder**

Identification mark	Installation position
"R"	Right, front
"L"	Left, front
No mark	Right and left, rear

NOTE

- **The illustration shows a right-hand wheel. Left-hand wheels are symmetrically arranged relative to the illustration.**

- Install the anchor pieces in the direction shown.

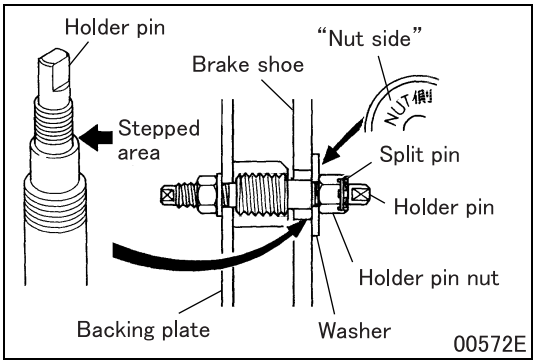

■**Installation: Brake shoe**

- Install the brake shoe.
- Insert the washer with the stamped word "NUT side" facing away from the brake shoe. Tighten the holder pin nut until the washer is slightly against the stepped area on the holder pin. Back off the holder pin nut between 0 to 60° until the first split pin holes in the nut and holder pin align with each other.
- Insert the split pin through the hole and bend it securely.

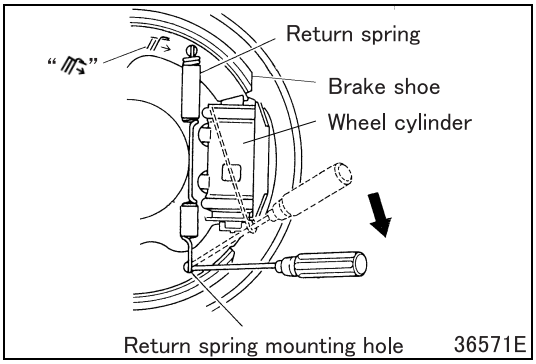

■ **Installation: Return spring**

- Install the shorter hook of the return spring onto the brake shoe which is on the opposite side from the wheel cylinder adjuster.
- Hook up a small Phillips screwdriver tip to the longer hook of the return spring of the brake shoe assembly and install the return spring using the screwdriver like a prying lever.

◆Adjustment after installation◆

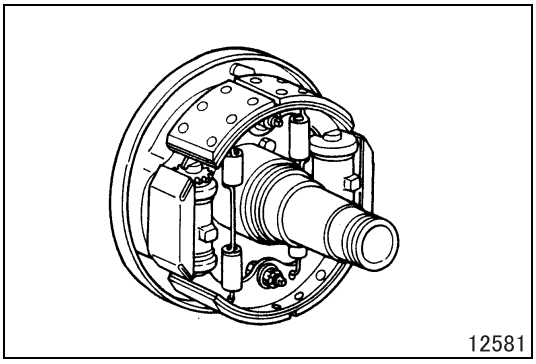

■ **Adjustment: Holder pin**

- Install the rear wheel brake onto the rear axle. (See Gr27.)

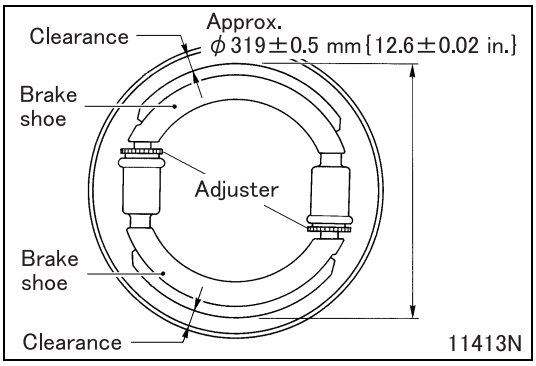

- Turn the adjuster until the distance between the brake shoes, indicated in the illustration, is obtained.
- Adjust the brake shoe-to-drum clearance evenly across by moving the brake shoe.

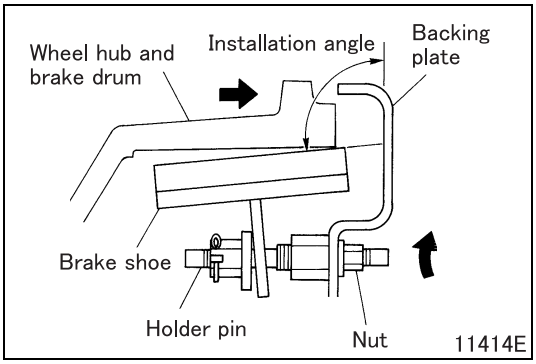

- Secure the wheel hub and brake drum onto the rear wheel brake. (See Gr27.)
  If the installation angle exceeds 90°, the wheel hub and brake cannot be installed correctly. If this is the case, loosen the nut while turning the holder pin in order to bring the installation angle as much close to 90° as possible.

- Bleed the brake system of air.
  (See “ON-VEHICLE INSPECTION AND ADJUSTMENT”.)

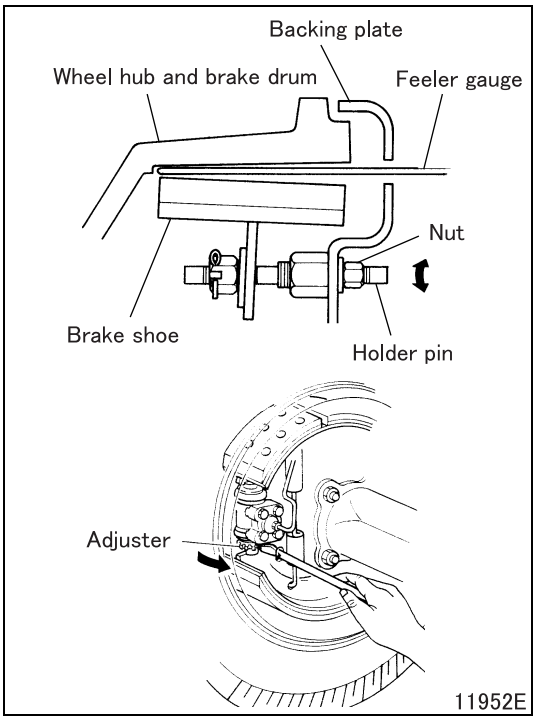

★• Expand the brake shoe towards the brake drum by turning the adjuster until it takes a reasonable force to insert a 0.2 mm {0.0079 in.} feeler gauge between the brake drum and lining and out.
★• Loosen the nut and turn the holder pin clockwise or counterclockwise until the feeler gauge can be inserted and out with a slight resistance.
- Repeat the above steps, shown with ★, until it takes a reasonable force to insert the feeler gauge between the brake drum and lining and out.
- Lightly press the brake pedal a couple of times to regain the even drum-to-lining clearance obtained earlier.
- Repeat the above steps, shown with ★, until it takes a reasonable force to insert the feeler gauge between the brake drum and lining and out.

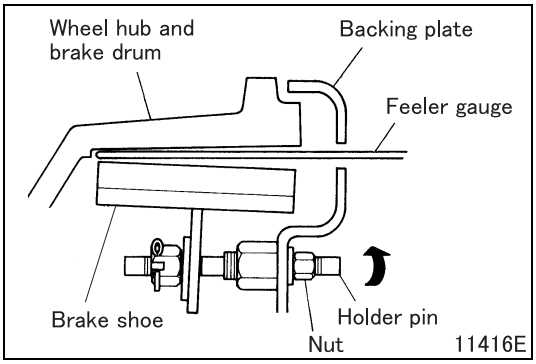

- When it takes a reasonable force to insert the feeler gauge between the brake drum and lining and out, this is because the feeler gauge is in contact with the entire width of the brake shoe.
- Now, pull out the feeler gauge. Then, with the feeler gauge inserted again, turn the holder pin until it takes a substantial force to remove and insert the feeler gauge across the entire width of the brake shoe.
- Tighten the nut to the specified torque.

M E M O

Wheel cylinder

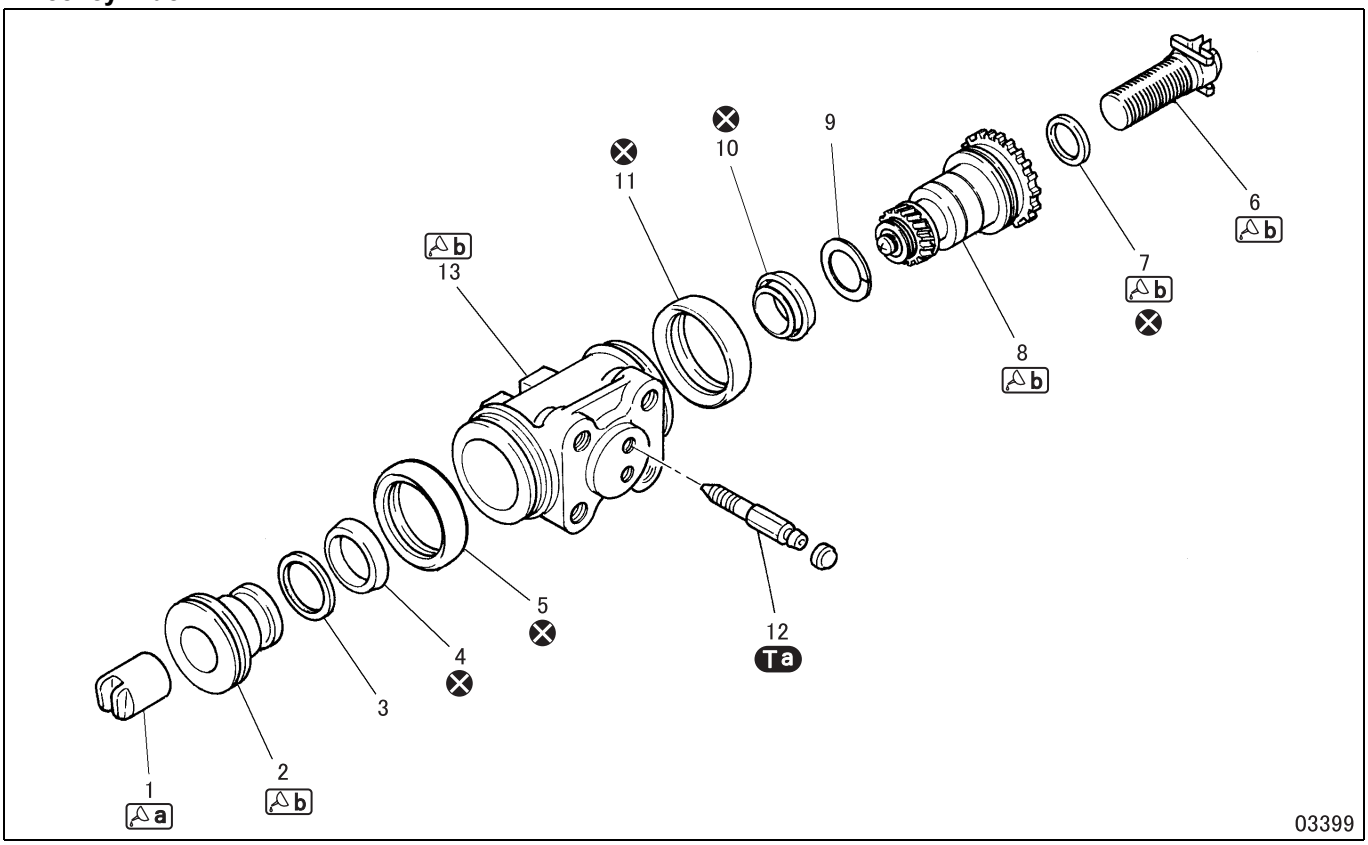

● **Disassembly sequence**

1 Anchor piece
2 Piston
3 Backup ring
4 Piston cup
5 Boot
6 Screw
7 Seal
8 Piston
9 Backup ring
10 Piston cup
11 Boot
12 Air bleeder (only for the front side)
13 Body

⊗: Non-reusable parts

● **Assembly sequence**

Follow the disassembly sequence in reverse.

Repair kit: Wheel cylinder kit

Service standards (Unit: mm {in.})

Location	Maintenance item	Standard value	Limit	Remedy
2, 8, 13	Clearance between piston and body	0.03 to 0.09 {0.0012 to 0.0035}	0.2 {0.0079}	Replace

Tightening torque (Unit: N·m {ft.lbs, kgf·m})

Mark	Parts to be tightened	Tightening torque	Remarks
Ta	Air bleeder	9.8 ± 2.0 {7.2 ± 1.5, 1.0 ± 0.2}	–

Lubricant and/or sealant

Mark	Points of application	Specified lubricant and/or sealant	Quantity
a	Bottom surface of anchor piece	Wheel bearing grease [NLGI No.2 (Li soap)]	As required
b	Thread area of screw	Rubber grease	As required
	Outer surface of seal		
	Outer surface of piston and boot installation groove		
	Inside surface of body and boot installation groove		

Special tools (Unit: mm {in.})

Mark	Tool name and shape	Part No.	Application
a	Piston cup guide A: φ41 {1.61}, B: 50 {1.97} 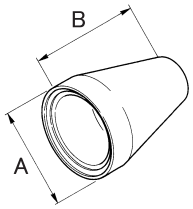 13697	MK356233	Installation of piston cup

◆Installation procedure◆

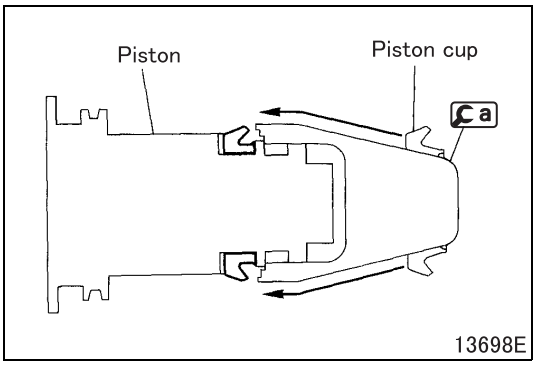

13698E

■ Installation: Piston cup

- Using a, install the piston cup as shown in the illustration.

CAUTION ⚠

- **Install the piston cup correctly, facing it as shown in the illustration, in order to prevent poor braking performance and brake fluid leakage.**

CHECK VALVE

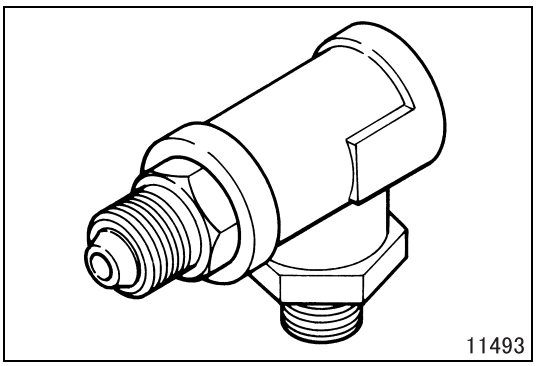

CAUTION ⚠

- **Do not disassemble this check valve because it is a unit construction.**

Service standards

Location	Maintenance item	Standard value	Limit	Remedy
–	Pressure difference between inlet and outlet	29 kPa {4.3 psi, 0.3 kgf/cm^2} or less	–	Replace

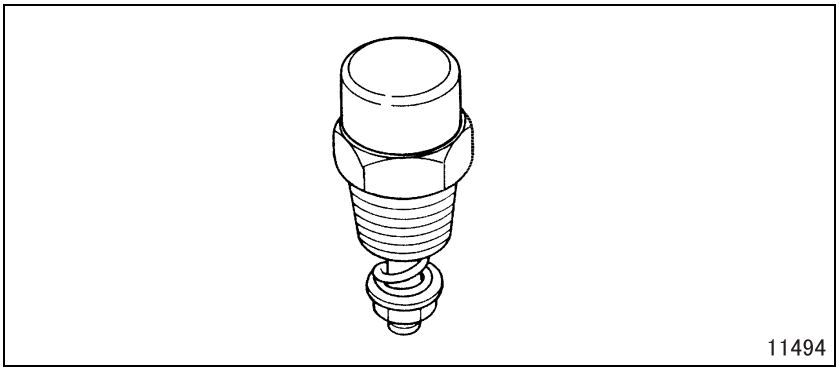

Service standards

Location	Maintenance item	Standard value	Limit	Remedy
–	Release pressure	950 ± 20 kPa {135 ± 2.8 psi, 9.7 ± 0.2 kgf/cm^2}	–	Replace

SUPPLY VALVE

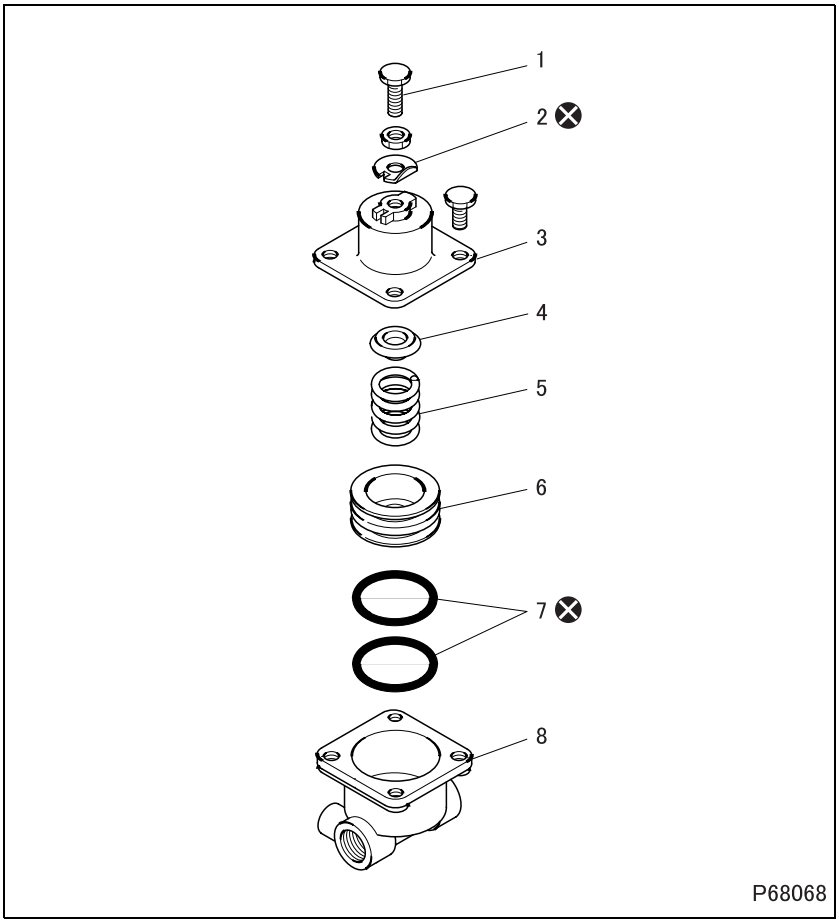

● Disassembly sequence

1 Adjusting bolt
2 Claw washer
3 Cap
4 Spring retainer
5 Spring
6 Piston
7 O-ring
8 Valve body

⊗: Non-reusable parts

CAUTION ⚠

- **Do not move the lock nut or adjusting bolt unless required for replacement or adjustment.**

● Assembly sequence

Follow the disassembly sequence in reverse.

Service standards

Location	Maintenance item			Standard value	Limit	Remedy
–	FK61, FM61, FM65	Specified pressure	Valve opening pressure	345 ± 29 kPa {50 ± 4.3 psi, 3.5 ± 0.3 kgf/cm^2}	–	Adjust or replace
			Valve closing pressure	314 ± 20 kPa {46 ± 2.8 psi, 3.2 ± 0.2 kgf/cm^2}	–	
–	FM64	Specified pressure	Valve opening pressure	471 ± 29 kPa {68 ± 4.3 psi, 4.8 ± 0.3 kgf/cm^2}	–	Adjust or replace
			Valve closing pressure	441 ± 20 kPa {64 ± 2.8 psi, 4.5 ± 0.2 kgf/cm^2}	–	

◆Adjustment after installation◆

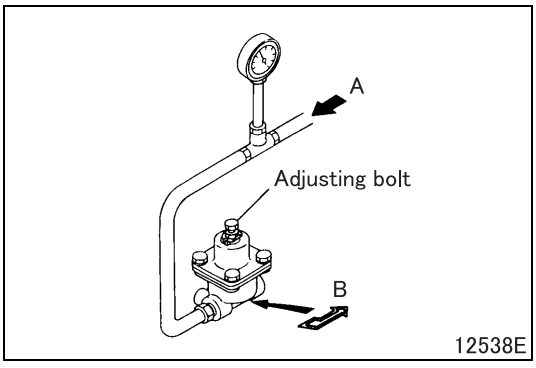

■ Adjustment: Supply valve

- Adjust by turning adjusting bolt after loosening lock nut. After adjusting, tighten the lock nut without turning the adjusting bolt, and bend claw washer to secure the lock nut.
  - Adjust adjusting bolt so that air is discharged from the outlet port (arrow mark B in the illustration), when valve opening pressure is applied to the inlet port (arrow mark A in the illustration).
  - After adjusting valve opening pressure, adjust adjusting bolt so that air is not discharged from the outlet port (arrow mark B in the illustration) when valve closing pressure is applied to the inlet port (arrow mark A in the illustration).
    B : Arrow showing the air flow direction

M E M O

QUICK RELEASE VALVE

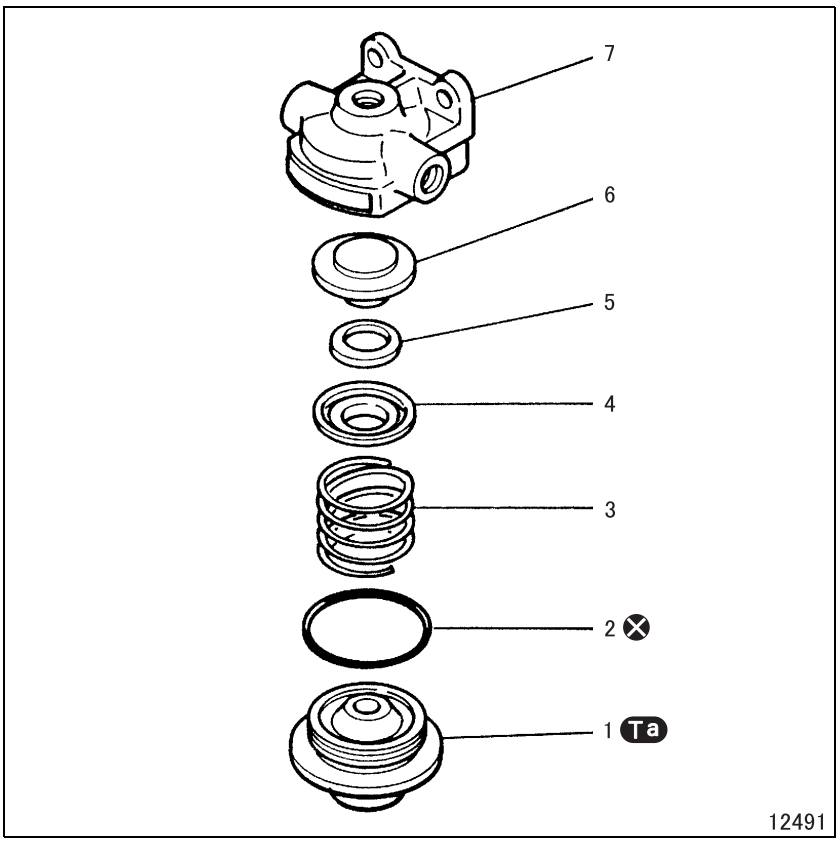

● **Disassembly sequence**

1 Body
2 O-ring
3 Spring
4 Retainer
5 Ring
6 Diaphragm & ring
7 Housing

⊗: Non-reusable parts

● **Assembly sequence**

Follow the disassembly sequence in reverse.

Repair kit : Relay valve kit

Tightening torque (Unit: N·m {ft.lbs, kgf·m})

Mark	Parts to be tightened	Tightening torque	Remarks
Ta	Body	17 to 23 {12 to 17, 1.7 to 2.3}	–

◆Adjustment after installation◆

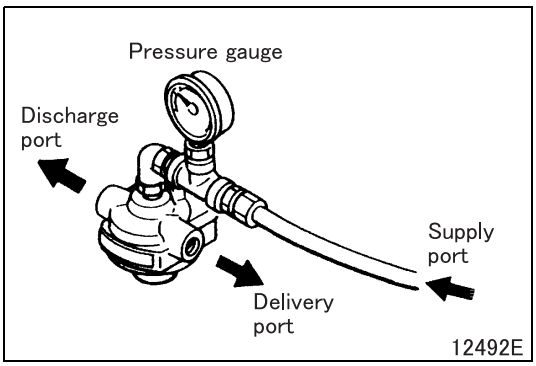

Characteristics Diagram

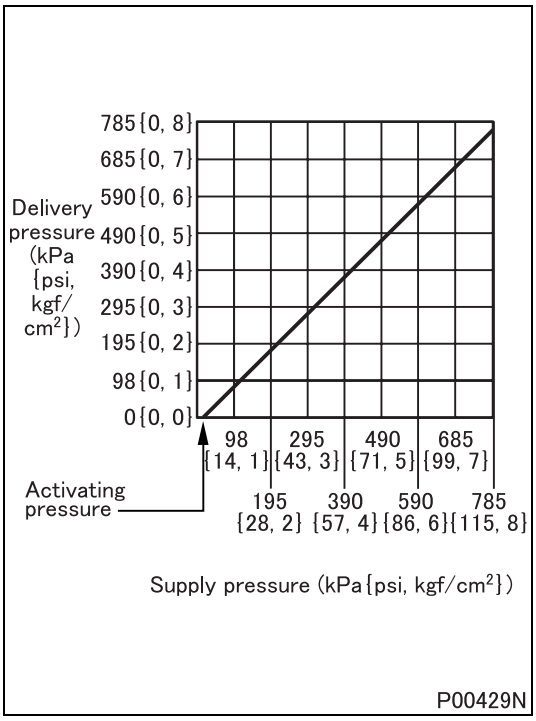

■ Adjustment: Quick release valve

- Connect pipe to the valve with a pressure gauge installed as shown and apply air pressure increasingly to the air supply port. Air should flow out from the discharge ports when the pressure gauge reads 9.8 ± 4.9 kPa {1.4 ± 0.7 psi, 0.1 ± 0.05 kgf/cm^2} (activating pressure).

Group 35B

Brake

<FULL AIR BRAKE>

Table of Contents

Back

Home

MITSUBISHI FUSO TRUCK OF AMERICA, Inc.

Pub.No.TWME0709-35B

INDEX

SPECIFICATIONS 35B-2

STRUCTURE AND OPERATION
1. Brake System 35B-4
2. Air Compressor ..... (See Gr35A.)
3. Air Dryer ..... (See Gr35A.)
4. Dual Brake Valve ..... (See Gr35A.)
5. Front Drum Brake 35B-8
6. Rear Drum Brake 35B-12
7. Relay Valve 35B-14
8. Quick Release Valve ..... (See Gr35A.)
9. Supply valve ..... (See Gr35A.)

TROUBLESHOOTING 35B-16

ON-VEHICLE INSPECTION AND ADJUSTMENT
1. Exhaust Noise from Brake Valve..... (See Gr35A.)
2. Air Pressure Build-up ..... (See Gr35A.)
3. Inspection and Adjustment of Brake Pedal Free Play ..... (See Gr35A.)
4. Inspection of Brake Lining Thickness..... 35B-20
5. Initial Adjustment of Clearance between Brake Drum and Shoe..... 35B-21
6. Maintenance and Inspection of Air Dryer ..... (See Gr35A.)
7. Inspection and Adjustment of Air Dryer's Air Pressure Governor..... (See Gr35A.)

HANDLING OF NYLON TUBE FOR AIR LINE
<COMPRESSION TYPE>.... (See Gr35A.)
<TUBE IDENTIFICATION COLORS>..... (See Gr35A.)

HANDLING OF CONNECTOR ..... (See Gr35A.)

AIR COMPRESSOR ..... (See Gr35A.)

AIR DRYER ..... (See Gr35A.)

BRAKE PEDAL ..... (See Gr35A.)

DUAL BRAKE VALVE ..... (See Gr35A.)

FRONT WHEEL BRAKE 35B-22

REAR WHEEL BRAKE 35B-32

EXPANDER 35B-44

CHECK VALVE ..... (See Gr35A.)

SAFETY VALVE ..... (See Gr35A.)

RELAY VALVE 35B-52

SUPPLY VALVE ..... (See Gr35A.)

QUICK RELEASE VALVE ..... (See Gr35A.)

SPECIFICATIONS

Air compressor

Item		Specifications
Type		Water-cooled 1 cylinder
Cylinder bore × stroke	mm {in.}	ϕ95 × 45 {3.74 × 1.77}
Cylinder displacement	cm^3 {cu.in.}	319 {19.5}
Manufacturer		Sanwa Seiki

Air dryer

Item		Specifications
Model		DU-3
Heater capacity	V-W	12-70
Thermostat operating temperature °C {°F}	ON	4 ± 4 {39 ± 39}
	OFF	16 ± 4 {61 ± 39}
Purge chamber capacity	dm^3 {qts}	1.6 {1.7}
Required time for recycling desiccant	sec.	50
Air pressure governor operating pressure	kPa {psi, kgf/cm^2}	760 to 890 {110 to 130, 7.8 to 9.1}
Manufacturer		Nabtesco

Air tank

Item		Specifications	
		FK	FM
Capacity	dm^3 {qts}	30 (8 + 22), 30 (8 + 22) {32 (8.5 + 23), 32 (8.5 + 23)}	30 (8 + 22), 38 (8 + 30) {32 (8.5 + 23), 40 (8.5 + 32)}

Front drum brake

Item		Specifications	
		FK	FM
Brake type		Leading-trailing type (with automatic adjuster mechanism)	
Brake drum inner diameter	mm {in.}	ϕ370 {14.6}	ϕ410 {16.1}
Brake lining width × thickness	mm {in.}	150 × 15 {5.91 × 0.59}	150 × 16 {5.91 × 0.63}

Rear drum brake

Item		Specifications	
		FK	FM
Brake type		Leading-trailing type (with automatic adjuster mechanism)	
Brake drum inner diameter	mm {in.}	ϕ370 {14.6}	ϕ410 {16.1}
Brake lining width × thickness	mm {in.}	170 × 15 {6.69 × 0.59}	200 × 16 {7.87 × 0.63}

M E M O

1. Brake System

1.1 FK

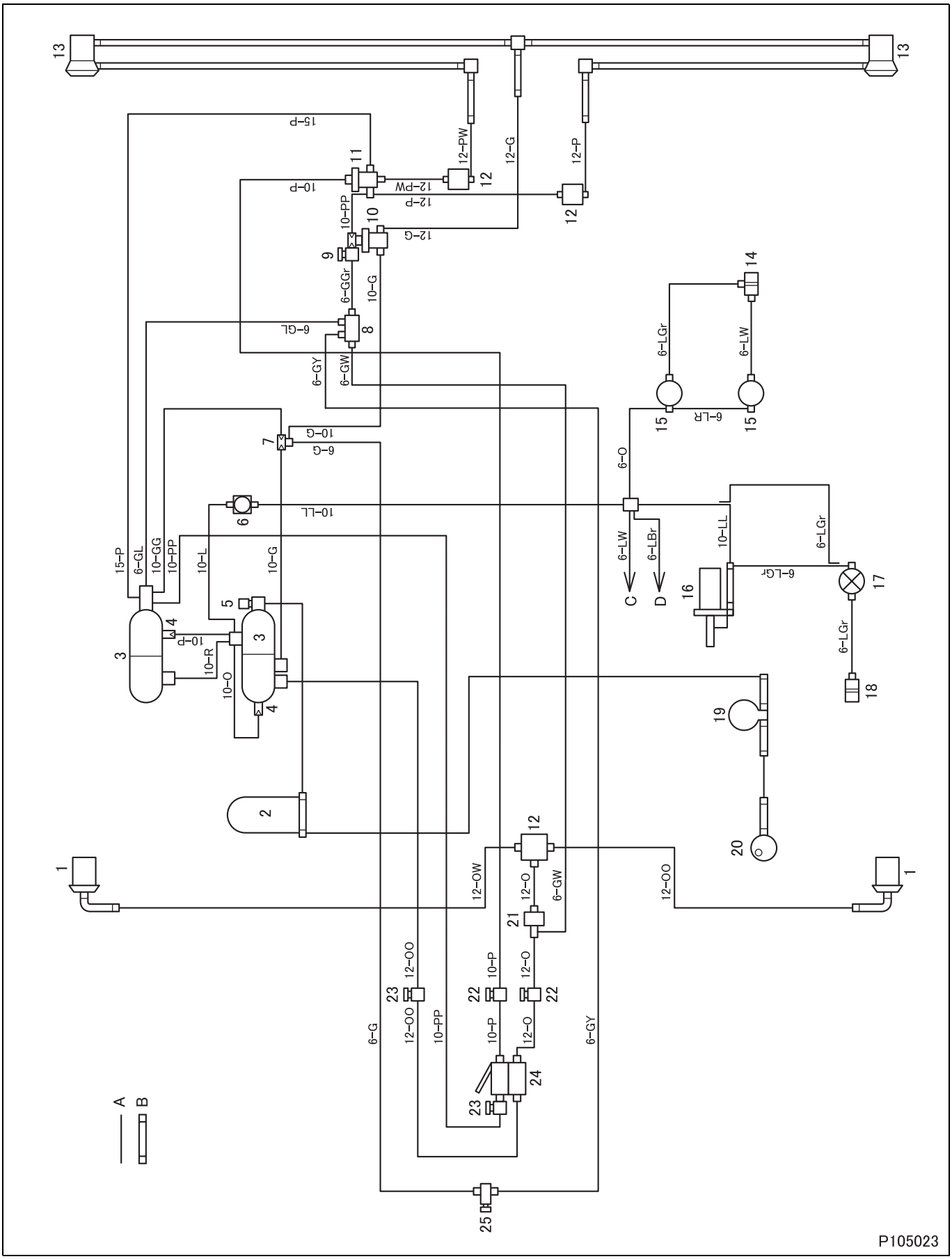

1 Front brake chamber
2 Air dryer
3 Air tank
4 Check valve
5 Safety valve
6 Supply valve
7 Double check valve
8 Spring brake valve
9 Parking brake switch
10 Relay valve (with double check valve)
11 Relay valve
12 Control valve
13 Rear brake chamber
14 Exhaust shutter
15 3-way magnetic valve
16 Clutch booster
17 Reducing valve
18 Waste gate magnetic valve
19 Air compressor
20 Air cleaner
21 Quick release valve
22 Stop lamp switch
23 Air pressure sensor
24 Dual brake valve
25 Parking brake control valve

A: Air pipe
B: Hose
C: To air horn
D: To air suspension seat

- The brake system is a full-air, all wheel brake type consisting of separate front and rear systems.
- Parking brake control valve is fitted as a safety mechanism. It provides normal braking action on the spring brake of rear brake chamber even if the rear brake system air line fails.
- An exhaust brake system, of the exhaust pipe opening and closing valve type, is fitted as a sub-brake system.

1.2 FM

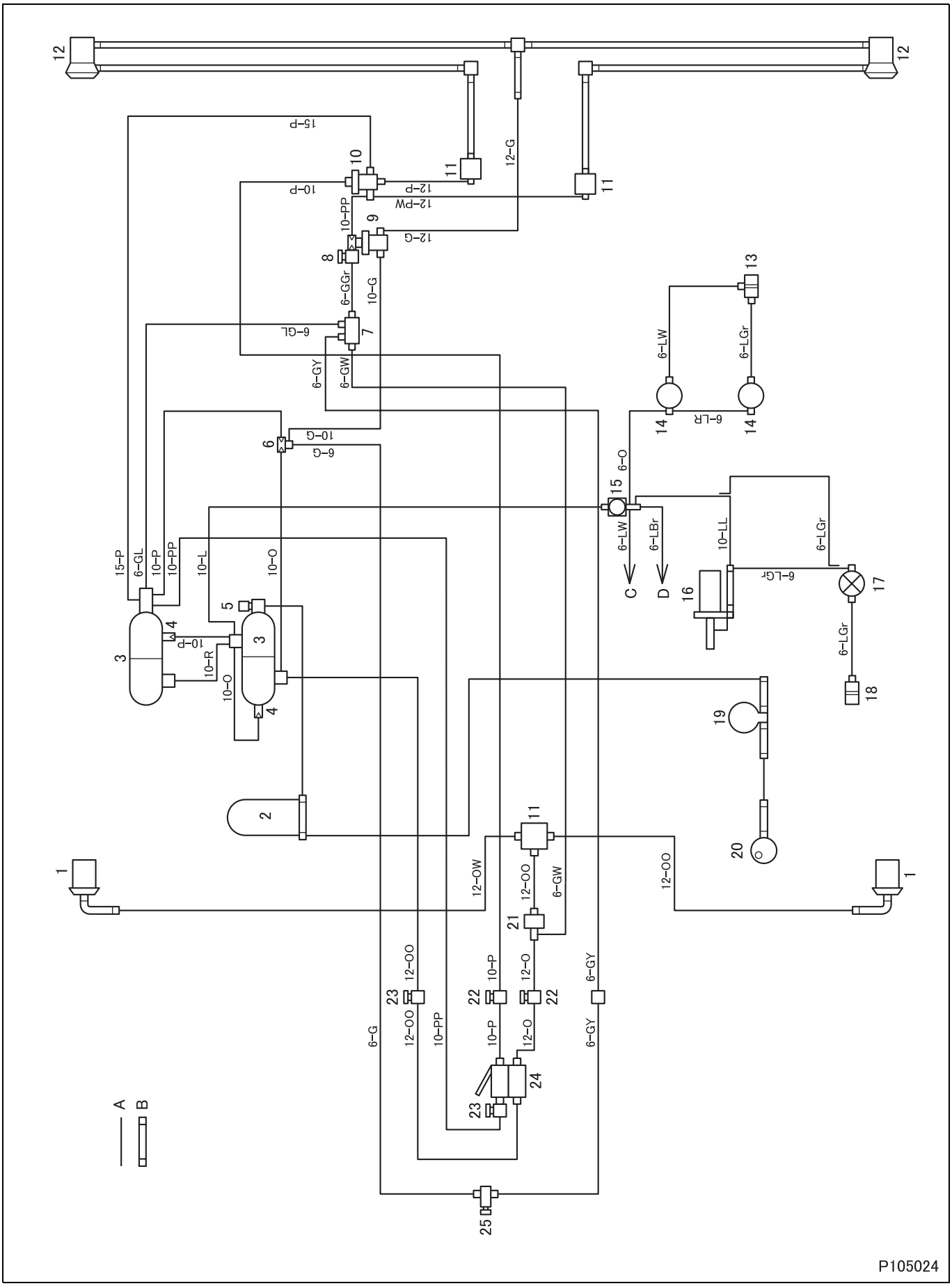
12
15-P
10
11
12-G
10-P
12-P
12-PW
10-PP
9
12-G
8
6-GGr
10-G
7
6-GL
6-GY
6-GW
13
6-LW
6-LGr
14
6-LR
6
10-G
6-G
15
6-O
6-LW
6-LBr
C
D
10-LL
6-LGr
16
17
6-LGr
18
15-P
6-GL
10-P
10-PP
10-L
10-O
5
4
3
10-P
10-R
10-O
19
20
2
1
11
12-OW
12-OO
6-GW
21
12-OO
23
22
10-P
12-O
6-GY
6-G
10-PP
24
A
B
25
P105024

1 Front brake chamber
2 Air dryer
3 Air tank
4 Check valve
5 Safety valve
6 Double check valve
7 Spring brake valve
8 Parking brake switch
9 Relay valve (with double check valve)
10 Relay valve
11 Control valve
12 Rear brake chamber
13 Exhaust shutter
14 3-way magnetic valve
15 Supply valve
16 Clutch booster
17 Reducing valve
18 Waste gate magnetic valve
19 Air compressor
20 Air cleaner
21 Quick release valve
22 Stop lamp switch
23 Air pressure sensor
24 Dual brake valve
25 Parking brake control valve

A: Air pipe
B: Hose
C: To air horn
D: To air suspension seat

- The brake system is a full-air, all wheel brake type consisting of separate front and rear systems.
- Parking brake control valve is fitted as a safety mechanism. It provides normal braking action on the spring brake of rear brake chamber even if the rear brake system air line fails.
- An exhaust brake system, of the exhaust pipe opening and closing valve type, is fitted as a sub-brake system.

5. Front Drum Brake

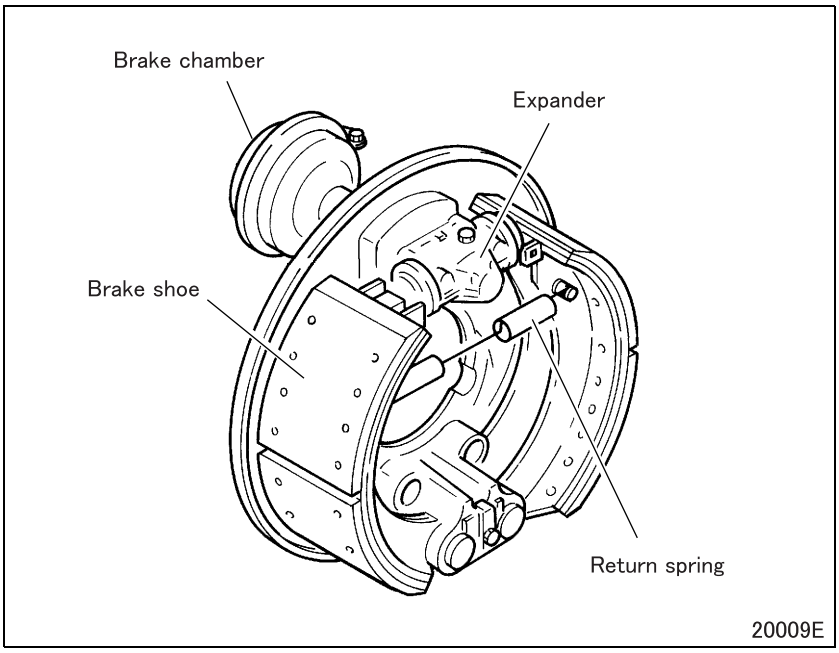

- The front drum brake is a leading-trailing shoe type brake.
- The double-acting expander ensures that, in both the forward- and rearward-travel braking, one of the brake shoes operates as a leading shoe which, through self-boosting effect, generates a great stopping power.

5.1 Wedge mechanism

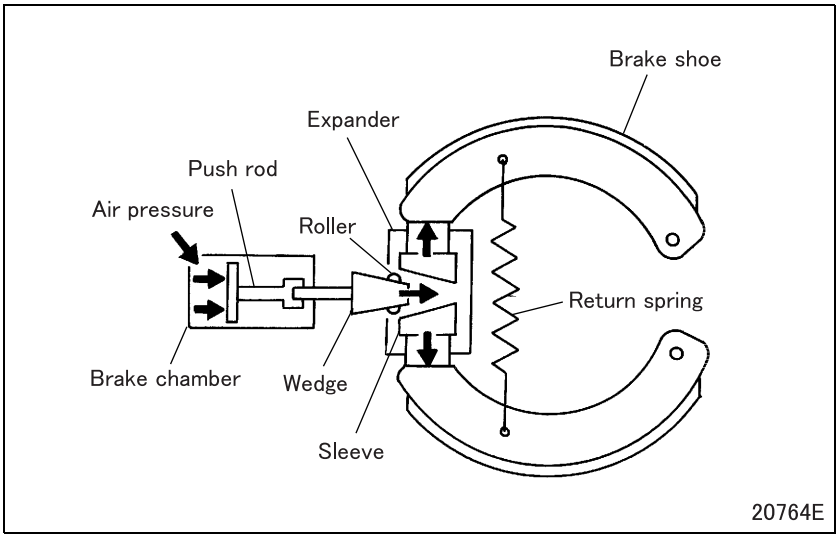

- When air pressure is applied to the brake chamber, the push rod is pushed into the wedge.
- This causes the wedge to push open the sleeves of the expander through rollers, expanding the brake shoes.

5.2 Brake chamber

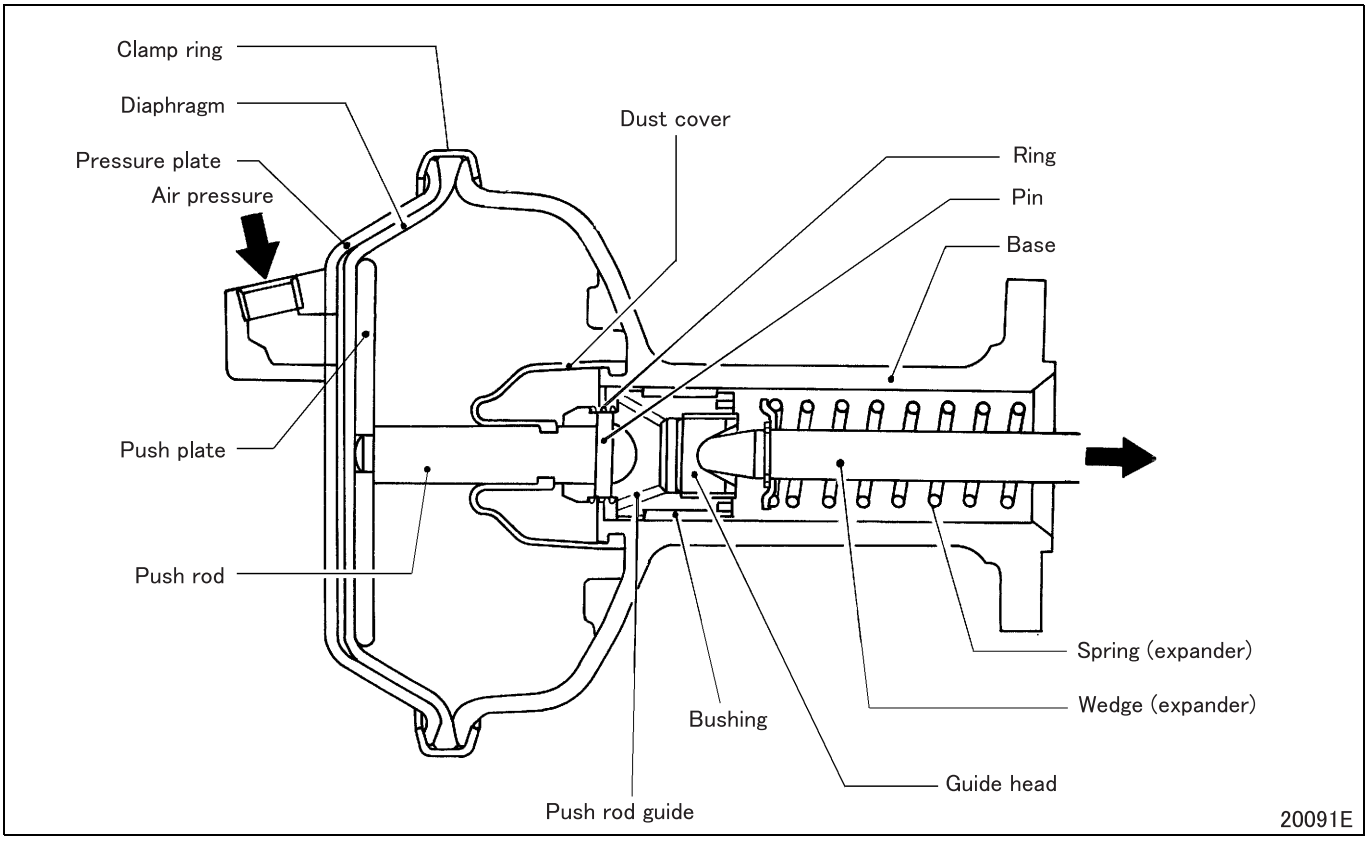

- When air pressure is applied to the brake chamber, the diaphragm moves to push the push rod which in turn pushes the wedge.
- When air pressure is released, the wedge and push rod are pushed back by the spring.

5.3 Expander

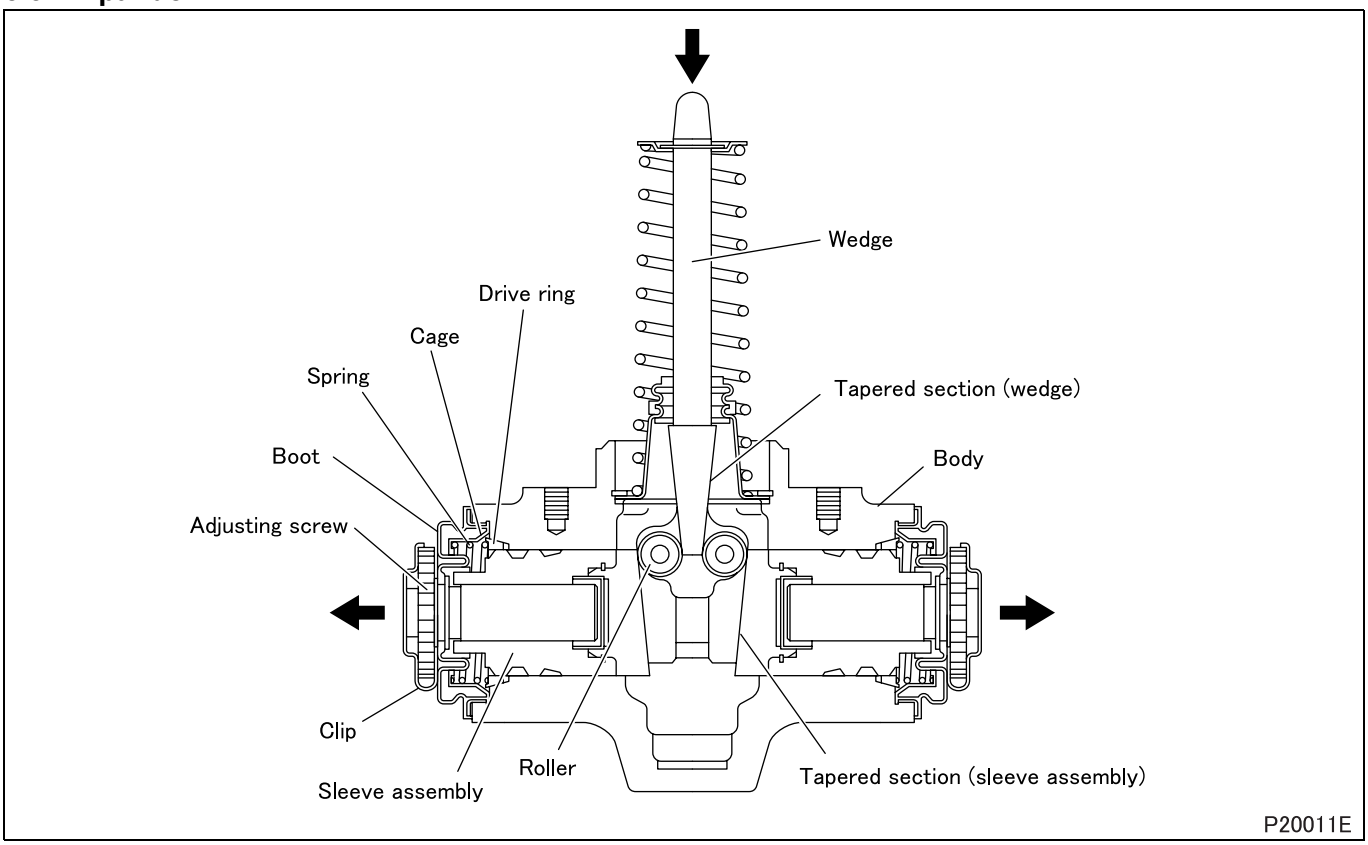

- When the wedge is pushed, its tapered section slides in between the rollers, pushing them open.
- The rollers roll along tapered section of the sleeve assemblies to push the sleeve assemblies and adjusting screws outward.
- The expander body incorporates an automatic adjuster mechanism which automatically adjusts the brake shoe-to-drum clearance.

(1) Automatic adjusting mechanism

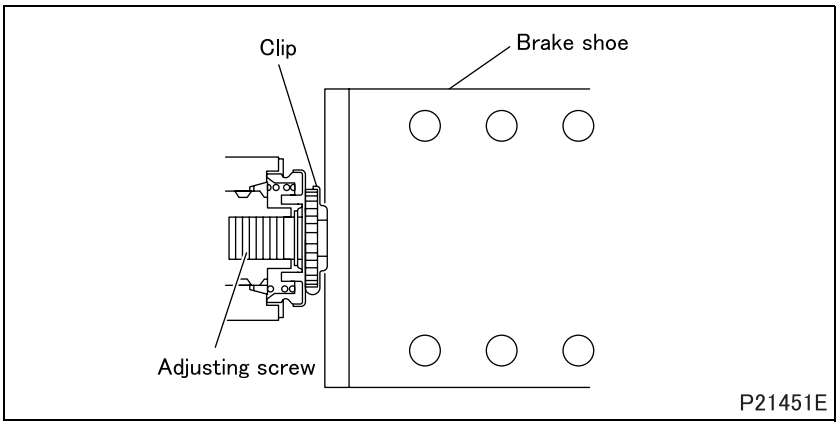

- The adjusting screw has its turning blocked by the clip.
- The clip has its turning blocked by the brake shoe.

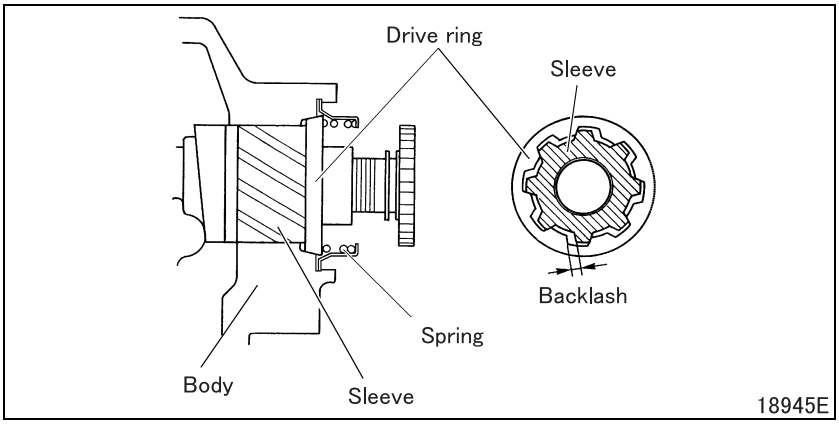

(1.1) In case that brake shoe clearance is specified value

- Before the brake is operated, the bottom of the sleeve assembly is in contact with the body.
- The drive ring is pushed against the body by the spring, being fixed in position.

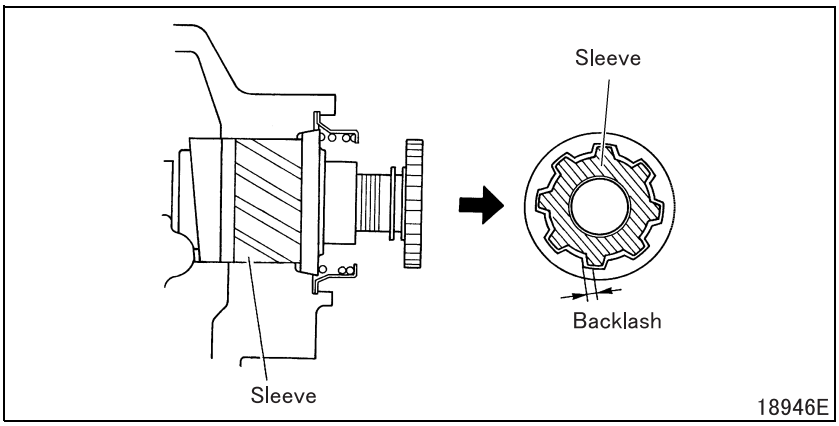

- When the brake is operated, the sleeve assembly moves within the range of backlash.

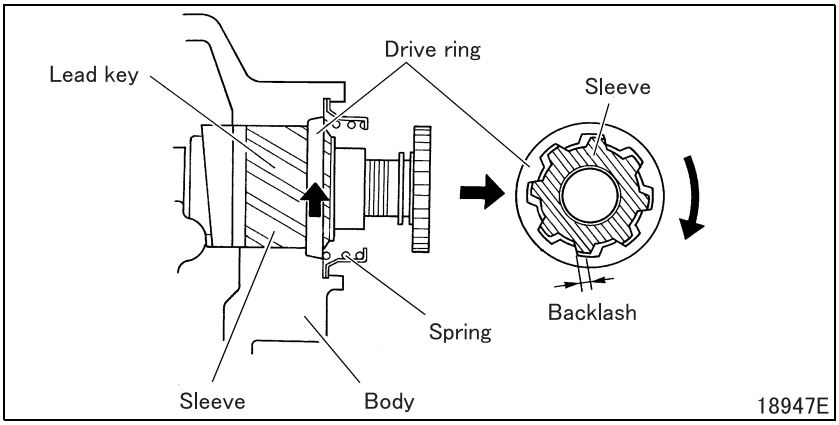

(1.2) In case that brake shoe clearance exceeds specified value

- When the brake is operated, the sleeve assembly moves beyond the range of backlash. Therefore, the drive ring is turned by the lead keys of the sleeve assembly since it is pushed by the spring.
- The drive ring is kept pressed against the body by the spring.

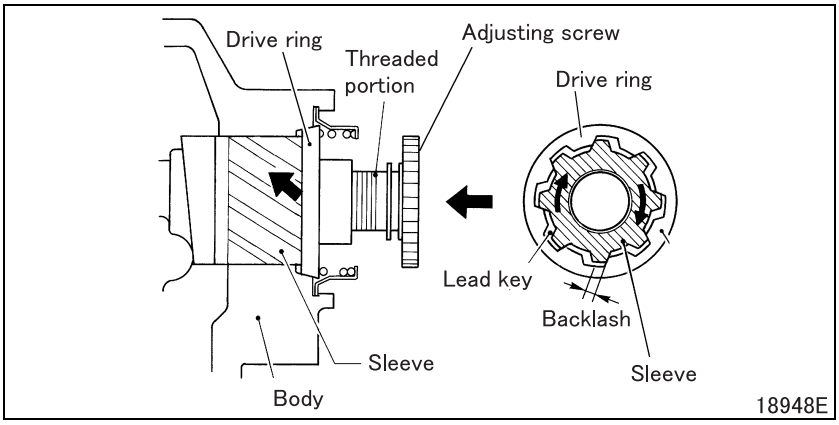

- When the brake is released, the sleeve assembly moves back until its bottom comes into contact with the body.
  At this time, the sleeve assembly moves without turning by the amount of backlash. After that point, the sleeve assembly is turned by the lead keys of drive ring. This causes adjusting screw to move out along threads, adjusting the brake shoe clearance to the specified value.

6. Rear Drum Brake

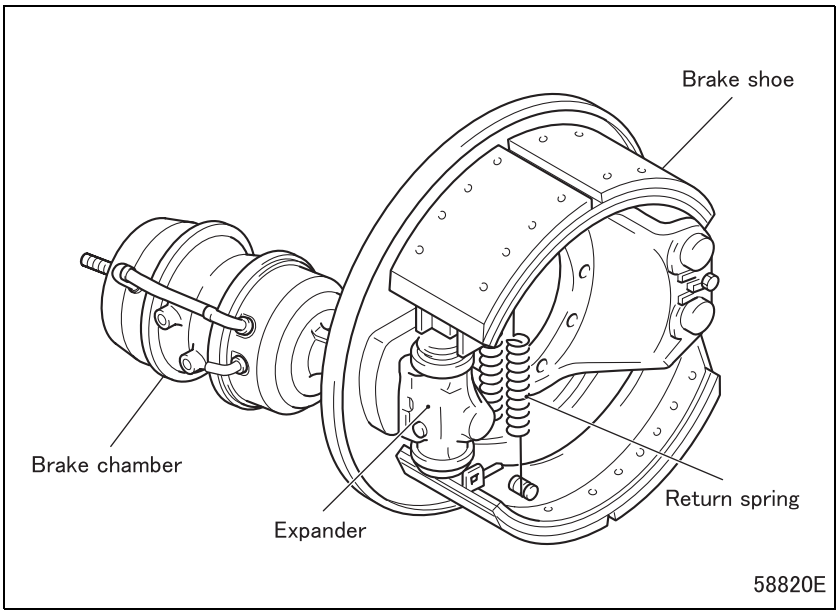

- The rear drum brake is a leading-trailing shoe type brake.
- The double-acting expander ensures that, in both the forward- and rearward-travel braking, one of the brake shoes operates as a leading shoe which, through self-boosting effect, generates a great stopping power.

6.1 Wedge mechanism

- The rear drum brake uses the same wedge mechanism that is used on the front drum brake.

6.2 Brake chamber

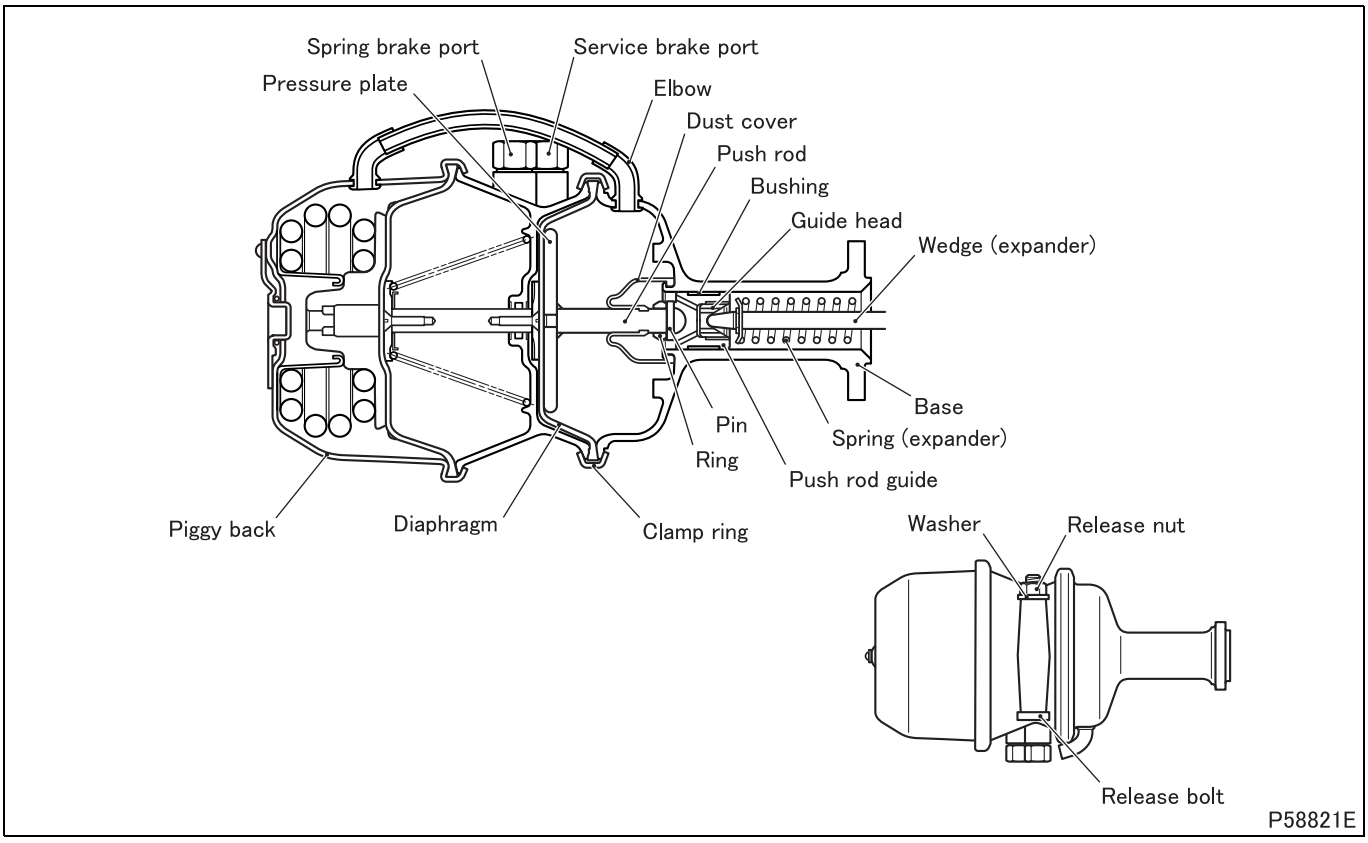

- The brake chamber offers a spring brake (wheel parking brake) function as well as service brake function.
- Washer, release nut and release bolt are used when releasing the spring brake mechanically.

(1) Automatic adjusting mechanism

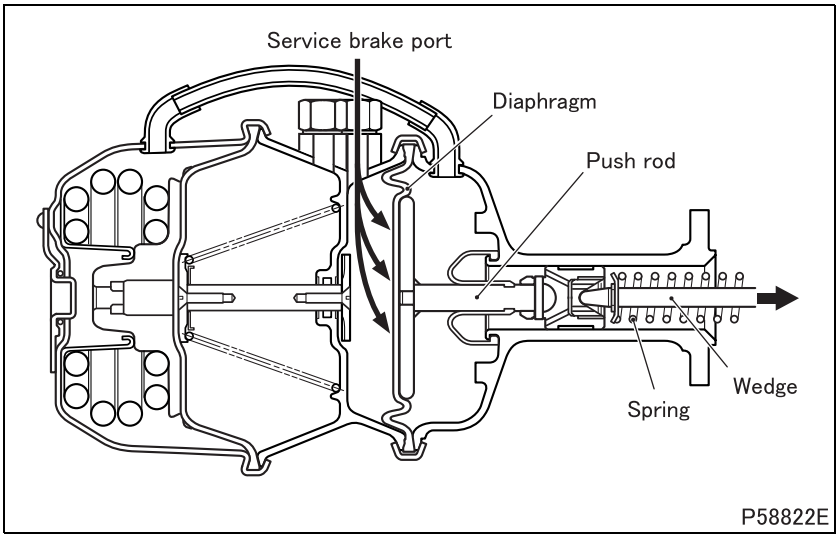

(1.1) When applied

- Air pressure introduced through the service brake port pushes the diaphragm which in turn pushes the push rod and wedge.

(1.2) When released

- Air pressure is discharged from the service brake port, which causes the wedge and push rod to be returned by the spring.

(2) Spring brake (wheel parking brake)

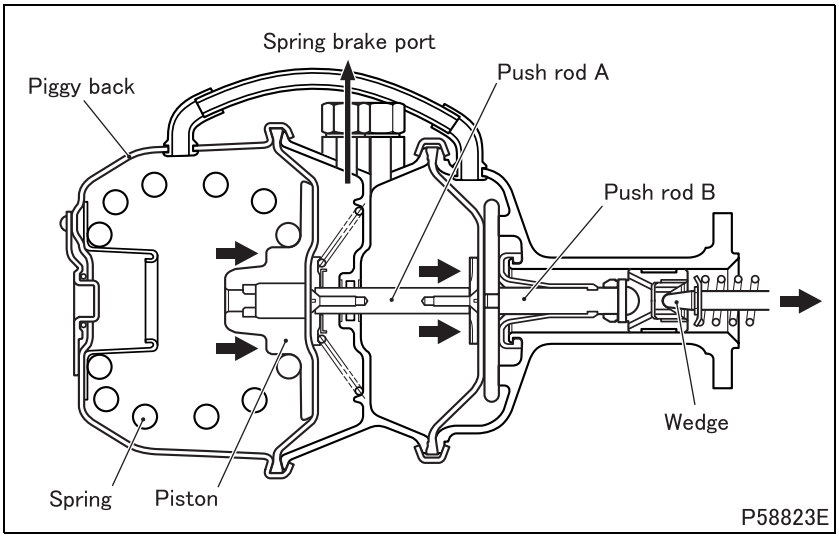

(2.1) When applied

- Air pressure is discharged from the spring brake port, which causes the piston, push rods A, B and wedge to be pushed by the spring of piggy back.

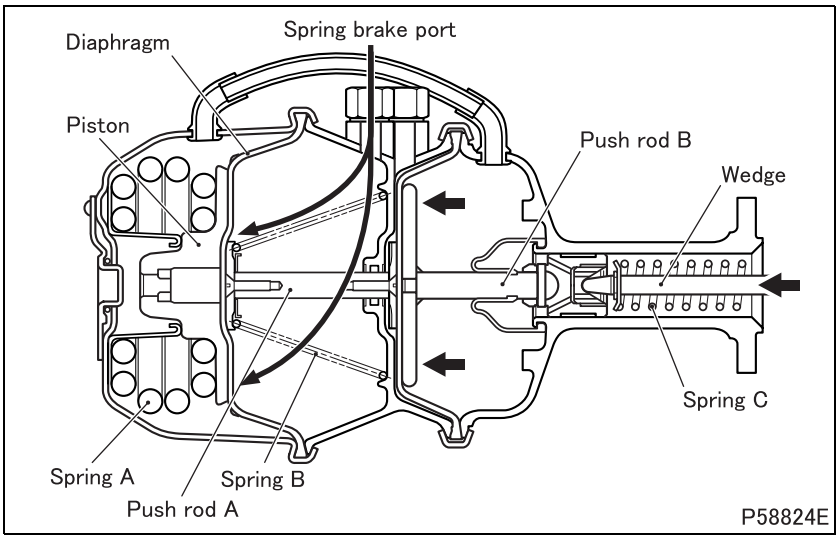

(2.2) When released

- Air pressure introduced through the spring brake port pushes back the piston through the diaphragm, compressing the spring.
- This causes push rod A to be pushed back by spring B.
- Wedge and push rod B are returned by spring C.

7. Relay Valve

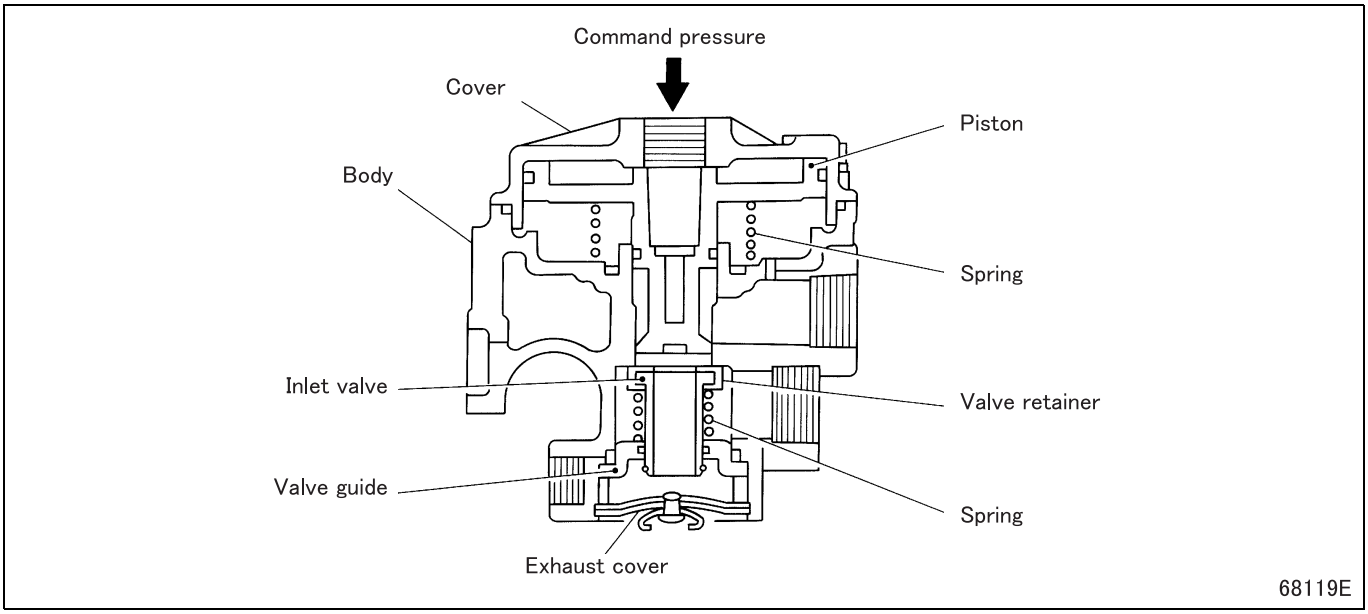

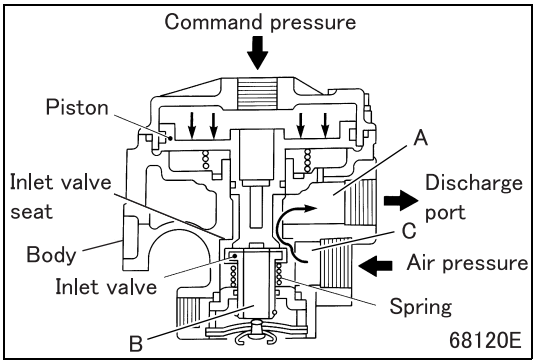

7.1 When brake pedal is depressed

- When command pressure comes in, piston moves downward to seat on inlet valve, closing exhaust passage chamber B. The inlet valve is then pushed down against spring, opening the gap between inlet valve seat of body and inlet valve. As a result, air pressure from the air tank flows from chamber C to chamber A, supplied to discharge port.

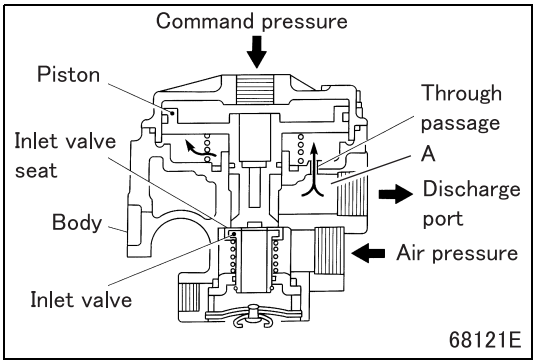

7.2 Stabilization of brake pressure

- When command pressure is maintained at a given level, the air pressure from discharge port is also stabilized. The air pressure in chamber A passes through passage to act on the bottom surface of piston, which pushes up the piston and inlet valve, each being held tightly up against each other. When the inlet valve touches inlet valve seat of body, it stops the supply of the air pressure from the air tank, stabilizing the brake air pressure at a given level.

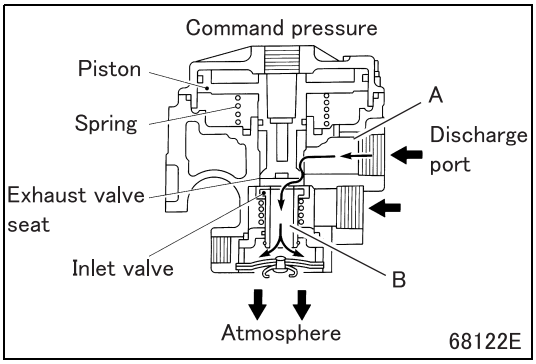

7.3 Release of brake pressure

- When there is no command pressure, piston is pushed up by spring and the air pressure (pressure in chamber A) on the side of discharge port. This results in exhaust valve seat on the lower end of the piston leaving inlet valve. Air pressure on the discharge side is therefore discharged into atmosphere through exhaust passage chamber B.

M E M O

Wheel Brake

Symptoms / Possible causes		Wheel brake not effective				Brake drum over-heating				Reference Gr
		Air leaks when brake pedal is pressed down	Air leaks when brake pedal is free	Brake not quite effective though no air leakage	Low air pressure	Brake shoe return slow when brake pedal is released (brake drum drags)	Noise generated when brake pedal is pressed down	Wheel brake application one sided	Wheel brake works suddenly	
Wheel brake	Too much brake shoe clearance			O				O		
	Brake lining surface greasy or oily			O						
	Brake lining surface hardened with degradation			O			O			
	Brake lining worn and rivet head is exposed						O			
	Uneven wear of brake drum inner surface						O			
	Improper fitness of brake shoe and brake lining						O			
	Brake drum mounting loose						O	O		
	Uneven material of brake lining							O		
	Incorrect contact of brake lining							O		
	Deflection of brake drum							O		
	Wheel parking brake engaged					O				
	Too little brake shoe clearance					O		O	O	
	Brake shoe return spring worn-out or broken					O		O		
	Improper return motion of expander sleeve assembly					O		O		
	Rusted wedge or anchor pin					O		O		
	Anchor pin looseness						O			
	Air not released from brake chamber					O				
	Air pressure different from one brake chamber to another							O		
Dual brake valve	O-ring damaged	O								Gr35A
	Air tightness of primary or secondary valve incomplete	O	O							Gr35A
	Inefficient return of primary or secondary valve or clogged by foreign matters at exhaust port					O				Gr35A

Possible causes \ Symptoms		Wheel brake not effective: Air leaks when brake pedal is pressed down	Wheel brake not effective: Air leaks when brake pedal is free	Wheel brake not effective: Brake not quite effective though no air leakage	Wheel brake not effective: Low air pressure	Brake drum over-heating: Brake shoe return slow when brake pedal is released (brake drum drags)	Noise generated when brake pedal is pressed down	Wheel brake application one sided	Wheel brake works suddenly	Reference Gr
Brake air system	Connector loose	O	O							
	Air leakage				O					
	Improper adjustment of air pressure governor in the air dryer				O					
	Air compressor malfunction				O					
Tires	Tire pressure uneven between left and right							O		Gr31
Suspension	Leaf spring U-bolt loose							O		Gr33

Air Dryer

Possible causes / Symptoms		Deposits come out of drain cock of air tank	No deposits come out of exhaust port	Freezing takes place within air dryer	Air pressure in air tank decreases markedly	Engine oil leaks from exhaust port	Reference Gr
Air dryer	Deterioration of desiccating agent	O					
	Inoperative heater causing air dryer to freeze		O				
	Malfunctioning of valve due to adherence of foreign particles		O				
	Heater open-circuited and therefore no heat retention			O			
	Heater malfunction due to thermostat malfunction			O			
	Extreme lowering of temperature of air dryer main body due to adherence of snow/ice			O			
	Heater malfunction due to disconnection with thermo-stat			O			
	Dry air in air tank flows out in reverse when check valve of air dryer fails to function as a non-return valve				O		
	Rising of oil level in air compressor					O	

M E M O

4. Inspection of Brake Lining Thickness

CAUTION ⚠

- **Be sure to inspect both shoes on each wheel to avoid malfunction of brakes.**

Service standards (Unit: mm {in.})

Location	Maintenance item		Standard value	Limit	Remedy
–	Brake lining thickness	FK	15 {0.59}	5 {0.20} (side step shows wear limit)	Replace
		FM	16 {0.63}	6 {0.24} (side step shows wear limit)	

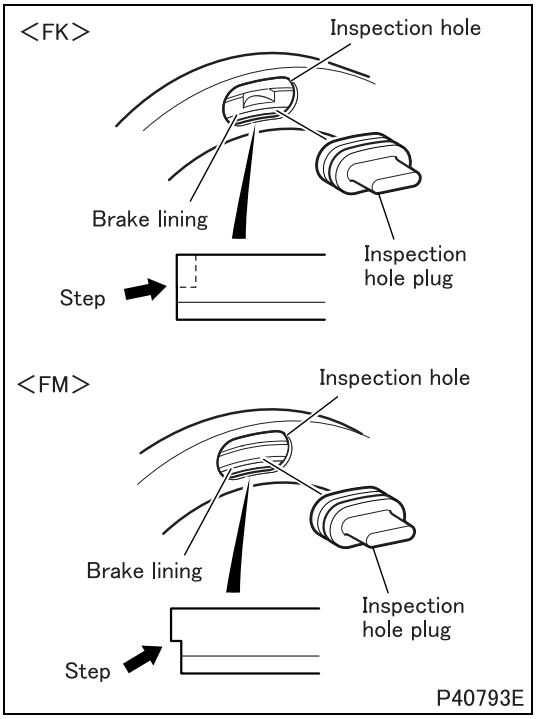

- Remove the inspection hole plug from the inspection hole in the dust cover. Through the inspection hole, measure the thickness of the brake lining.
- If any lining is worn down to the step on the side face, replace all linings on that axle.
- After the inspection, be sure to install the plug onto the inspection hole.

5. Initial Adjustment of Clearance between Brake Drum and Shoe

CAUTION ⚠

- **To ensure correct operation of the brakes, be sure to inspect both shoes on each wheel.**

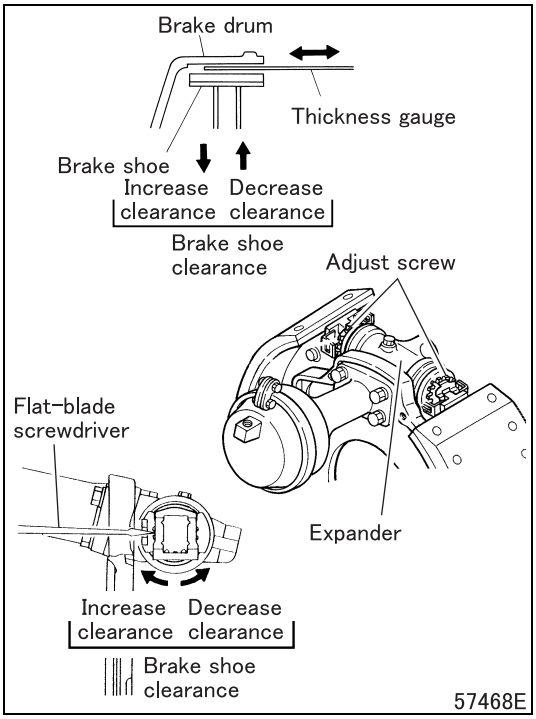

- Jack up front wheel, and make sure that hub bearings are not loose. If loose, adjust the hub bearings. (See Gr26B.)
- Remove the inspection hole plug from the dust cover.
- Through one of the inspection holes, insert a 0.3 to 0.5 mm {0.012 to 0.020 in.} thickness gauge between the brake lining and drum. Adjust the adjusting screw on the expander such that the gauge can be inserted and out with slight resistance. Repeat this through the other inspection hole.
- After adjustment, be sure to install the inspection hole plug.

CAUTION ⚠

- **When using a flat-blade screwdriver to turn the adjuster, take care not to damage the boots on the expander.**

FRONT WHEEL BRAKE

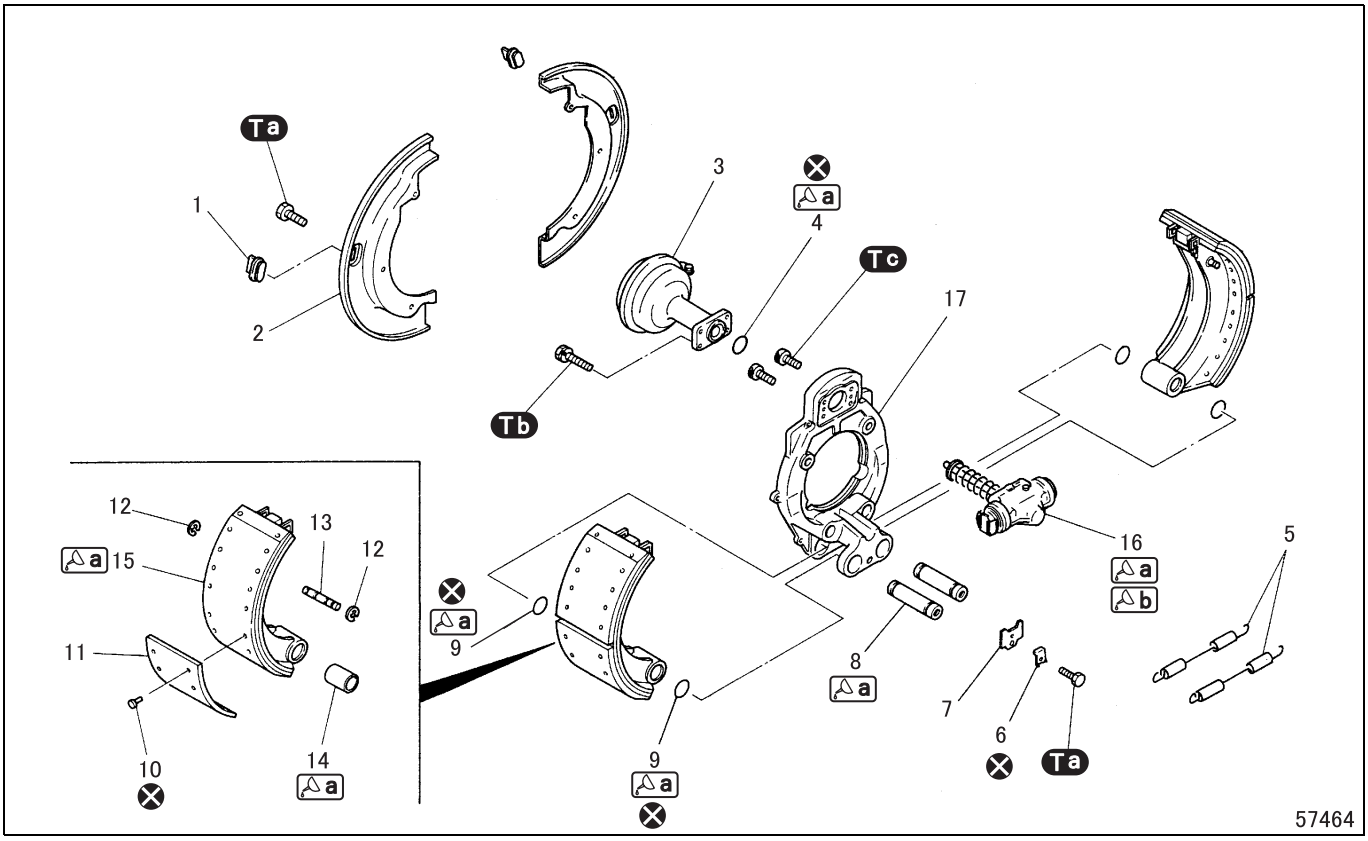

- For information on removal and installation of front drum brake, refer to Gr26B.

● Disassembly sequence

1 Inspection hole plug
2 Dust cover
3 Brake chamber (See later section.)
4 O-ring
5 Return spring
6 Lock washer
7 Lock plate
8 Anchor pin
9 O-ring
10 Rivet
11 Brake lining
12 Snap ring
13 Pin
14 Bushing
15 Brake shoe
16 Expander (See later section.)
17 Anchor bracket

⊗: Non-reusable parts

● Assembly sequence

Follow the disassembly sequence in reverse.

Repair kit: Brake lining kit

WARNING ⚠

- **To prevent poor working of the brake, do not smear the surface of the brake lining with grease or oil.**

Service standards (Unit: mm {in.})

Location	Maintenance item		Standard value	Limit	Remedy
5	Return spring load (installed length 252 {9.92} <FK>, 258 {10.2} <FM>)		292 ± 29 {66 ± 6.5 lbf, 29.8 ± 3.0 kgf}	Clearance between coils or coil and cover	Replace
8, 14	Clearance between anchor pin and bushing		0.05 to 0.14 {0.0020 to 0.0055}	0.3 {0.012}	Replace
11	Brake lining thickness	FK	15 {0.59}	5 {0.20} (side step shows wear limit)	Replace
		FM	16 {0.63}	6 {0.24} (side step shows wear limit)	

Tightening torque (Unit: N·m {ft.lbs, kgf·m})

Mark	Parts to be tightened	Tightening torque	Remarks
Ta	Bolt (dust cover mounting)	20 ± 3.9 {15 ± 2.9, 2 ± 0.4}	–
	Bolt (lock plate mounting)		
Tb	Bolt (brake chamber assembly mounting)	50 ± 7.5 {37 ± 5.1, 5.1 ± 0.7}	–
Tc	Screw (expander mounting)	19 ± 4.9 {14 ± 3.6, 1.9 ± 0.5}	–

Lubricant and/or sealant

Mark	Points of application	Specified lubricant and/or sealant	Quantity
a	Anchor pin grease groove	Wheel bearing grease [NLGI No. 2 (Li soap)]	As required
	O-ring		
	Contact surface of brake shoe assembly and expander		
	Inner surface of bushing		
	Wedge pointed end of expander		
b	Section of expander into which wedge is inserted	Shell Darina Grease 2 [NLGI No. 2 (Non soap)]	10 g {0.35 oz}

Special tools (Unit: mm {in.})

Mark	Tool name and shape	Part No.	Application
ca	Return spring setter A: 500 {20} 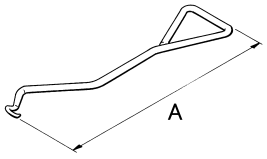 01610	MC809749	Removal and installation of return spring
cb	Anchor pin puller 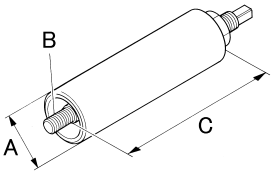 01611 A: ϕ60 {2.36}, B: M16 × 1.5, C: 173 {6.81}	03727-60000	Removal of anchor pin

◆Removal procedure◆

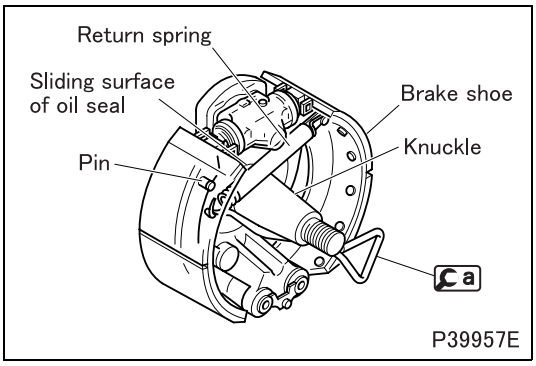

P39957E

■ **Removal: Return spring**

- Fit ca into the hooked part at one end of the return spring and use it to pry the return spring free.

CAUTION ⚠

- **Do not hook ca onto the oil seal sliding portion of the knuckle.**

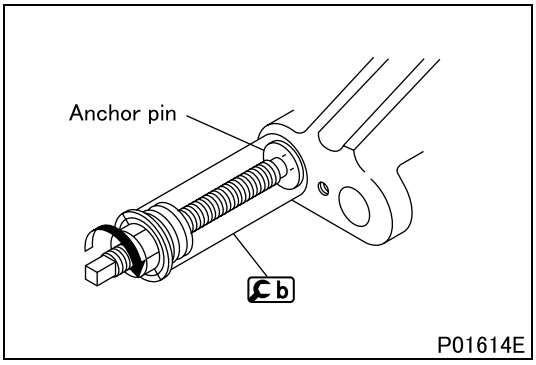

P01614E

■ **Removal: Anchor pin**

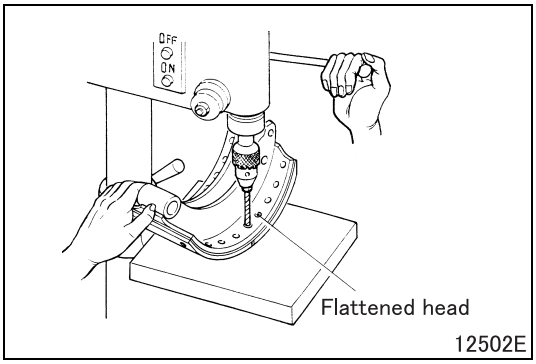

■ **Removal: Brake lining**

- Using a drilling machine, break the flattened rivet heads on the brake shoe side to release the brake lining.

◆Inspection procedure◆

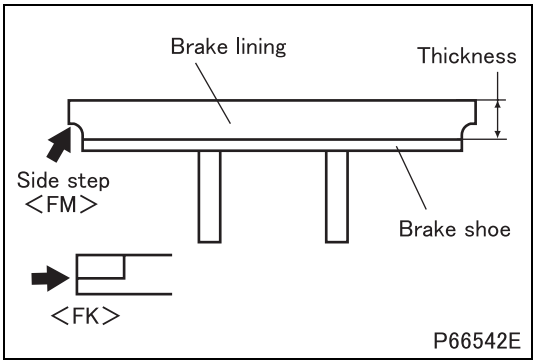

■ **Inspection: Brake lining thickness**

- If the brake lining is worn down to the side step, replace all brake linings on that axle.

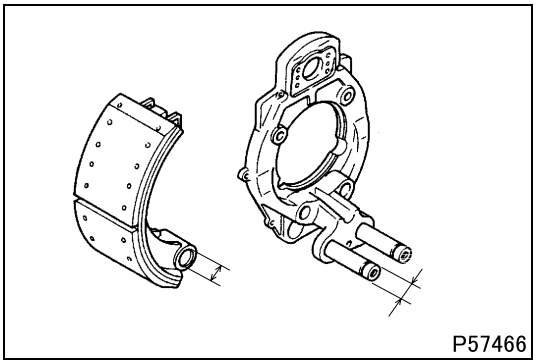

■ **Inspection: Clearance between anchor pin and bushing**

- If the measurement exceeds the limit, replace the bushing.

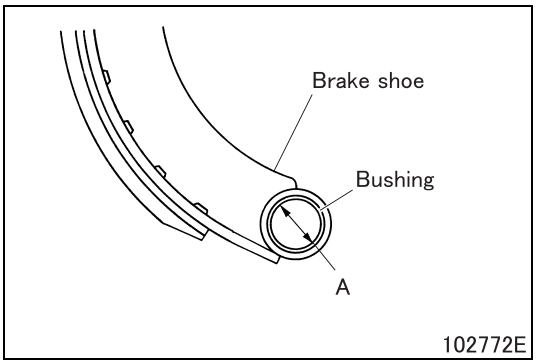

[Installation]

- With the bushing installed in the brake shoe, measure the inner diameter of the bushing.
- If the measured value is out of the dimension A shown below, ream the bushing.

  A: $30^{+0.05}_{0}$ mm {$1.18^{+0.002}_{0}$ in.} <FK>
  $35^{+0.05}_{0}$ mm {$1.38^{+0.002}_{0}$ in.} <FM>

◆Installation procedure◆

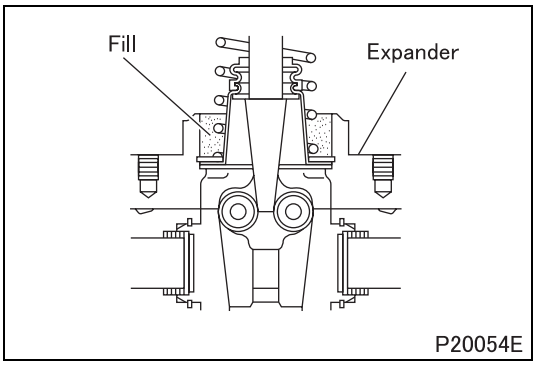

■ **Installation: Expander**

- Fill the expander with the specified quantity of grease as shown in the illustration.

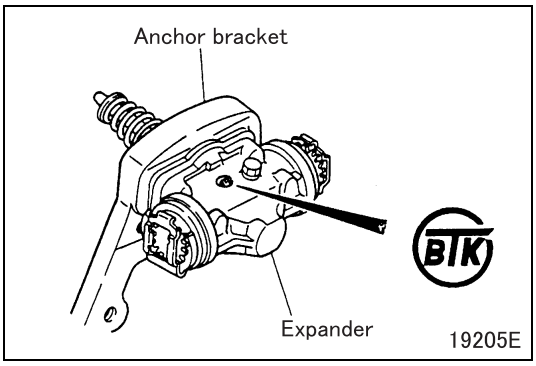

- Mount the expander to the anchor bracket in the direction shown.

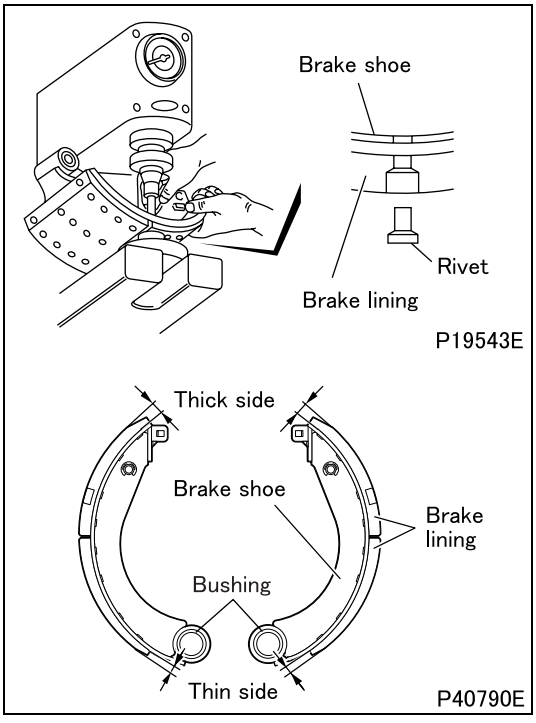

■ **Installation: Brake lining**

- Using cleaning fluid, clean the brake shoe surface to which the brake lining is to be mounted. Then, dry the shoe surface.
- Mount the brake lining on the brake shoe with the thin side of the brake lining pointing the bushing for the brake shoe.
- Insert rivets from the brake lining to the shoe. Stake them, starting from the center of the shoe towards the ends.
- The staking load for the rivets should be 19.6 ± 0.98 kN {4410 ± 220 lbs, 2000 ± 100 kgf}.

CAUTION ⚠

- **New replacement brake linings that are to be installed on the same axle should all be in the same size and have the same identification mark. Otherwise, braking performance can be different between the left and right wheels.**
- **The brake lining has a tapered end. If a lining is installed with its end pointing in the incorrect direction, poor braking performance or braking noise can be caused. <FK>**

- After assembly, check the brake drum-to-lining clearance. Correct as required.

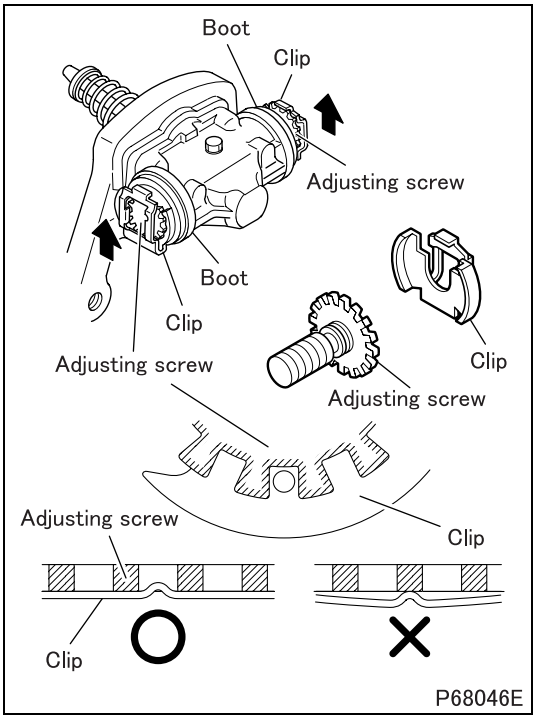

■ **Installation: Brake shoe**

- Turn adjusting screw of expander assembly fully clockwise by hand.
  (Return of a screwing portion of adjusting screw)
- Confirm whether the open part of clip is in the drum side; if it is not in the drum side, turn adjusting screw further clockwise to match the position. (This rotation is due to the rotation sleeve assembly)

WARNING ⚠

- **Be sure to apply grease appropriately on the contact part of adjusting screw in boot; otherwise auto adjuster may be caused the malfunctioning due to breakage of boot.**

CAUTION ⚠

- **Turn is slowly so that boot may not be jammed.**
- **Be sure to keep the convex part of clip between teeth of adjusting screw (2 points).**

- Take care whether clip is misaligned, and return adjusting screw anticlockwise by two revolutions. (Only if the lining is replaced.)

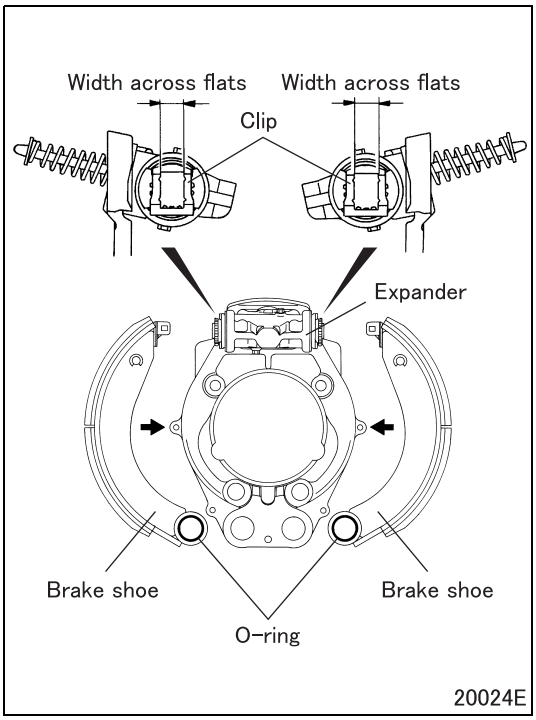

- Install brake shoes such that their end may accurately fall within the width across flats of clip.

CAUTION ⚠

- **When installing brake shoes, be careful not to damage clips and O-rings.**

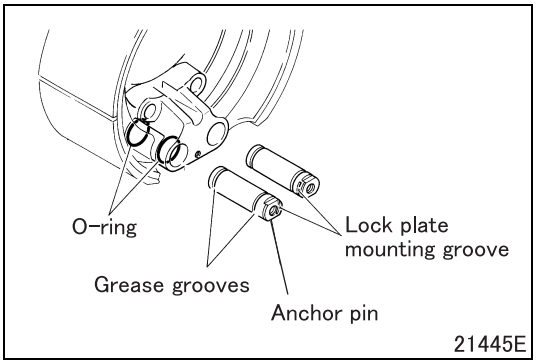

- Apply grease in grease grooves of the anchor pins.
- Install anchor pins in the illustrated direction.

CAUTION ⚠

- **Use care not to install anchor pins in the wrong direction. Otherwise, damaged O-rings will result.**

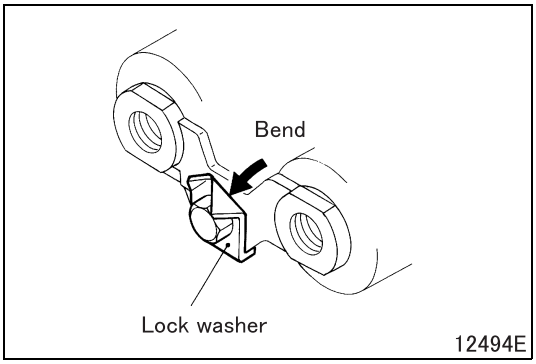

■ Installation: Lock washer

- After tightening the lock plate bolt to the specified torque, stake the lock washer at one location.

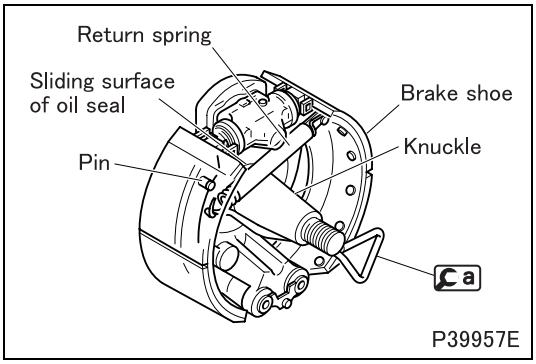

■ Installation: Return spring

- Fit the hooked part at one end of the return spring onto the pin in one of the brake shoe.
- Fit the hooked part at the other end of the return spring onto a and use a to fit it onto the pin in the other brake shoe assembly.

CAUTION ⚠

- **Do not hook a onto the oil seal sliding portion of the knuckle.**

◆Inspection after installation◆

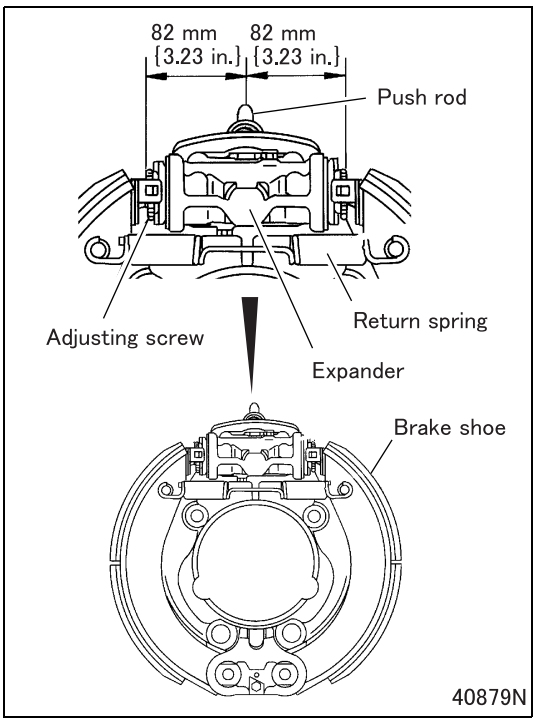

■ **Inspection: Check of operation**

- Ensure that the installed dimension of 82 mm {3.23 in.} is satisfied on the expander. If not, disassemble the expander and reinstall the adjusting screw(s). (See later section.)
- Reinstall the expander and brake shoes.
- Expand the brake shoes by pushing the push rod over its full stroke.
- Return the push rod to its original position and check whether the expander returns to the required dimension of 82 mm {3.23 in.}.
- If the results are unsatisfactory, check the force of the brake springs and the degree of stiffness in the brake shoes. Also inspect the expander again.

WARNING ⚠

- **Unless the check of operation after assembly is performed thoroughly, the automatic adjustment mechanism may not operate normally.**

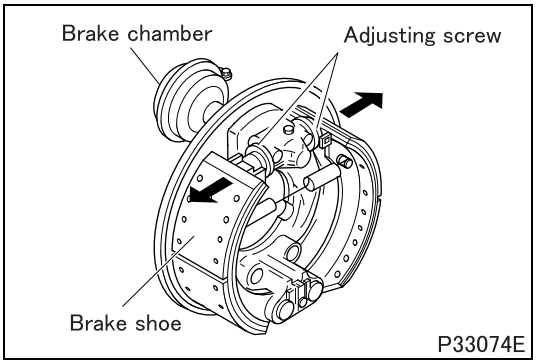

- If the brake chamber was disassembled, perform the following checks:
  - Pull the brake shoes with a force of 20 to 30 N {4.4 to 6.6 lbs, 2 to 3 kgf} and make sure that the brake shoes do not move together with the adjusting screws of the expander.

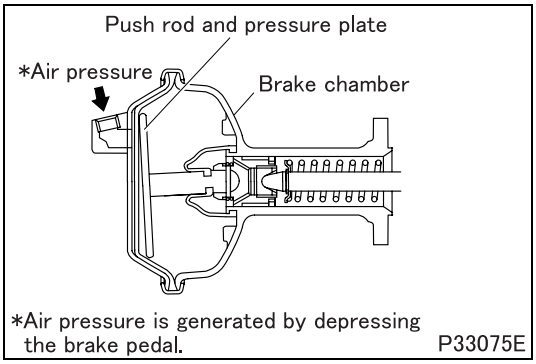

  - If the brake shoes move, the push rod and pressure plate in the brake chamber are not fitted squarely. With the brake drum not fitted, press the brake pedal two or three times to position the push rod and pressure plate correctly.

FRONT WHEEL BRAKE

Brake Chamber Assembly

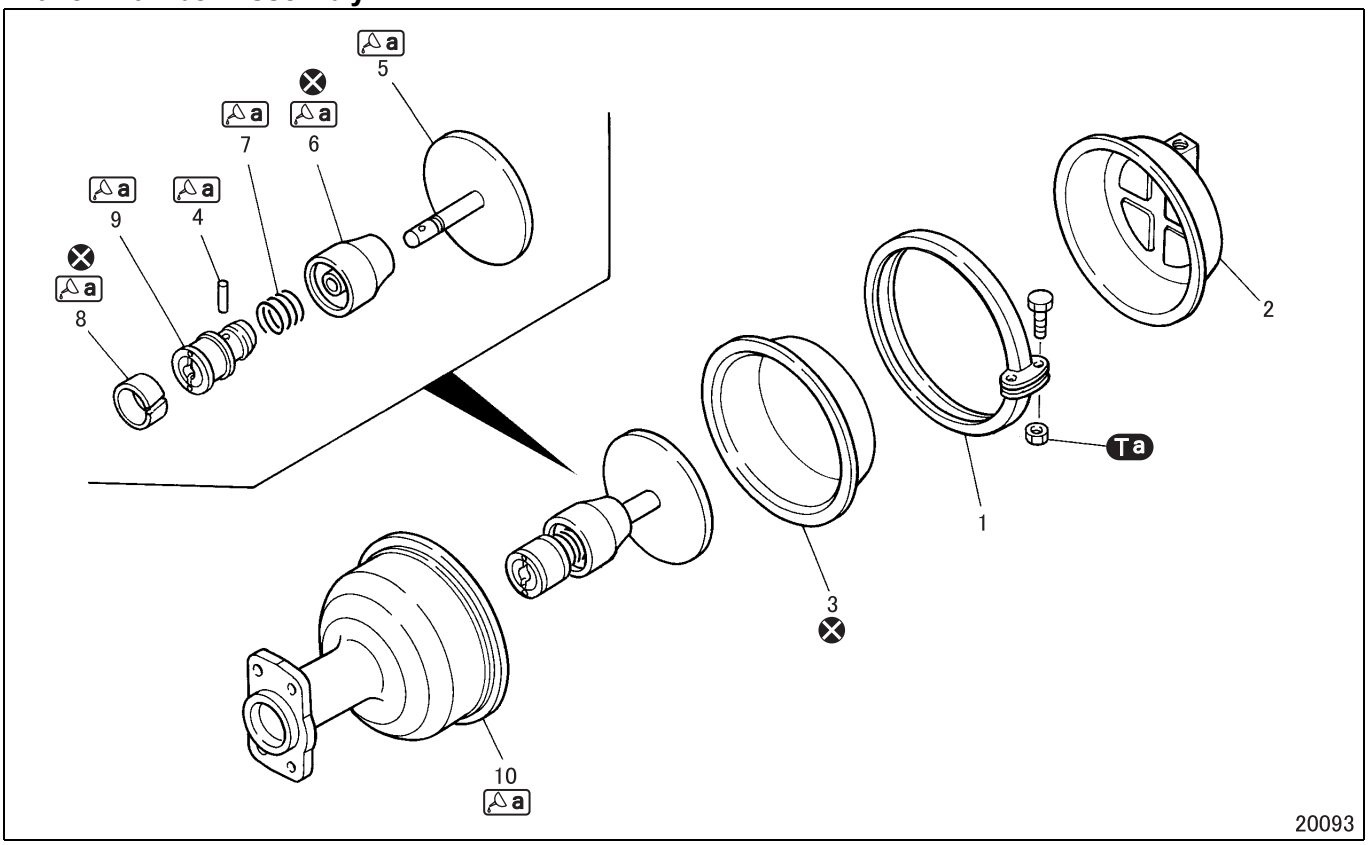

● **Disassembly sequence**

1 Clamp ring
2 Pressure plate
3 Diaphragm
4 Pin
5 Push rod and pressure plate
6 Dust cover
7 Ring
8 Bushing
9 Push rod guide
10 Base
⊗: Non-reusable parts

● **Assembly sequence**

Follow the disassembly sequence in reverse.

Repair kit: Chamber kit

CAUTION ⚠

- **Keep diaphragm free from oil and grease. Oily or greasy diaphragm can come off position.**

Tightening torque (Unit: N·m {ft.lbs, kgf·m})

Mark	Parts to be tightened	Tightening torque	Remarks
Ta	Nut (clamp ring mounting)	14.7 to 20.0 {11 to 15, 1.5 to 2.0}	–

Lubricant and/or sealant

Mark	Points of application	Specified lubricant and/or sealant	Quantity
a	Each contact surface	Multipurpose grease [NLGI No. 2 (Li soap)]	As required

◆Work before disassembly◆

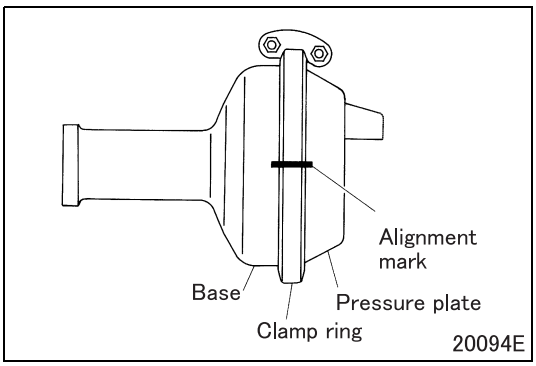

■ **Alignment mark: Brake chamber**

- Disassemble clamp ring, pressure plate and base, ensuring that alignment marks are properly aligned.

REAR WHEEL BRAKE

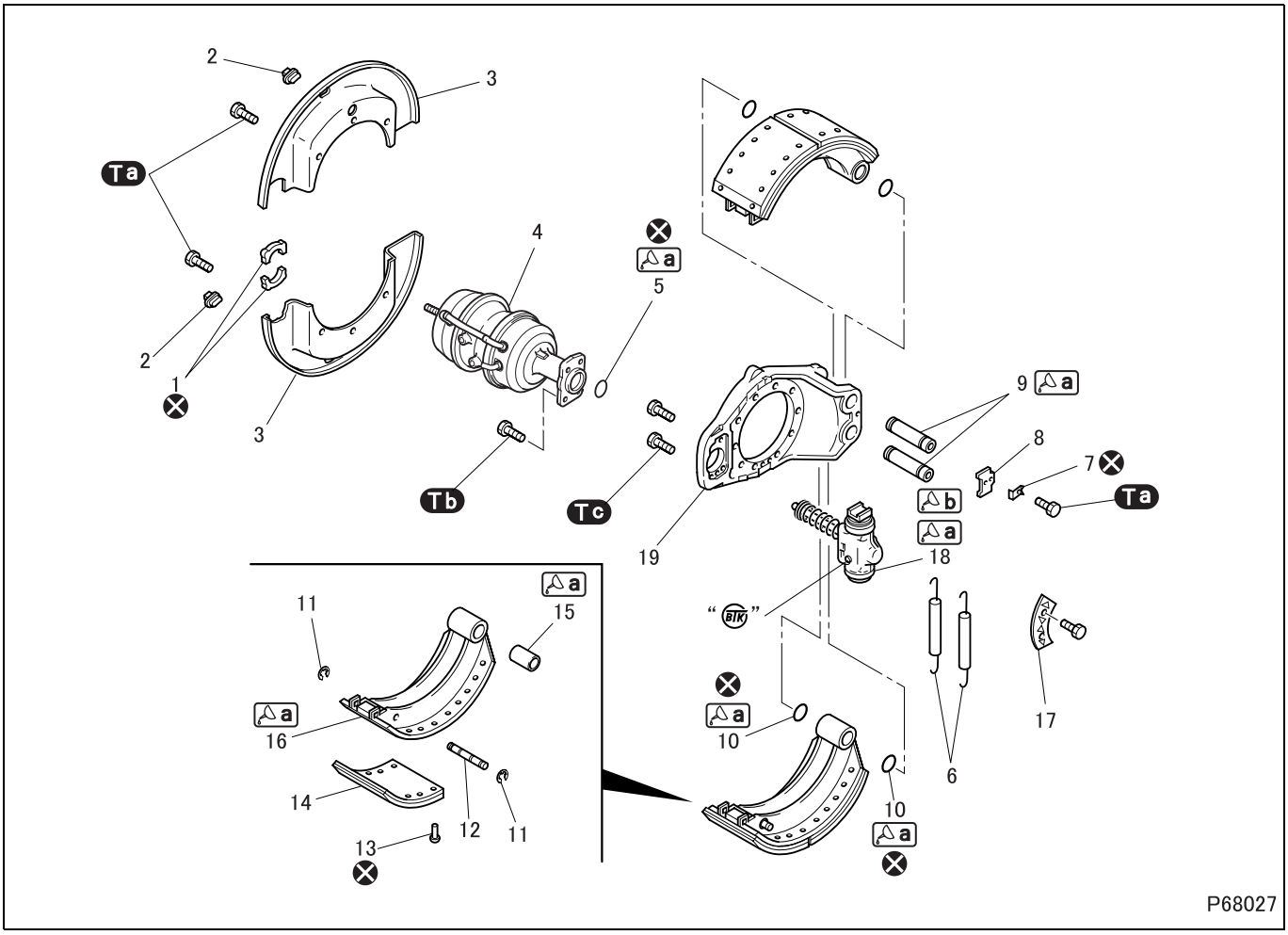

- For information on removal and installation of rear drum brake, see Gr27.

● Disassembly sequence

1 Seal
2 Inspection hole plug
3 Dust cover
4 Brake chamber (See later section.)
5 O-ring
6 Return spring
7 Lock washer
8 Lock plate
9 Anchor pin
10 O-ring
11 Snap ring
12 Pin
13 Rivet
14 Brake lining
15 Bushing
16 Brake shoe
17 Stopper plate
18 Expander (See later section.)
19 Anchor bracket

⊗: Non-reusable parts

● Assembly sequence

Follow the disassembly sequence in reverse.

Repair kit: Brake lining kit

WARNING ⚠

- **To prevent poor working of the brake, do not smear the surface of the brake lining with grease or oil.**

Service standards (Unit: mm {in.})

Location	Maintenance item		Standard value	Limit	Remedy
6	Return spring load	FK (installed length 252 {9.92})	292 ± 29 N {66 ± 6.5 lbs, 29.8 ± 3.0 kgf}	Clearance between coils or coil and cover	Replace
		FM (installed length 262.6 {10.3})	363 ± 29 N {82 ± 6.5 lbs, 37.0 ± 3.0 kgf}		
9, 15	Clearance between anchor pin and bushing		0.05 to 0.14 {0.0020 to 0.0055}	0.3 {0.012}	Replace
14	Brake lining thickness	FK	15 {0.59}	5 {0.20} (side step shows wear limit)	Replace
		FM	16 {0.63}	6 {0.24} (side step shows wear limit)	

Tightening torque (Unit: N·m {ft.lbs, kgf·m})

Mark	Parts to be tightened	Tightening torque	Remarks
Ta	Bolt (dust cover mounting)	19.6 ± 3.9 {14 ± 2.9, 2 ± 0.4}	–
	Bolt (lock plate mounting)		
Tb	Bolt (brake chamber mounting)	44.1 ± 7.8 {33 ± 5.8, 4.5 ± 0.8}	–
Tc	Screw (expander mounting)	18.6 ± 4.9 {14 ± 3.6, 1.9 ± 0.5}	–

Lubricant and/or sealant

Mark	Points of application	Specified lubricant and/or sealant	Quantity
a	Anchor pin grease groove	Wheel bearing grease [NLGI No. 2 (Li soap)]	As required
	O-ring		
	Contact surface of brake shoe and expander		
	Inside surface of bushing		
	Wedge pointed end of expander		
b	Section of expander into which wedge is inserted	Shell Darina Grease 2 [NLGI No. 2 (Non soap)]	8 g or more

Special tools (Unit: mm {in.})

Mark	Tool name and shape	Part No.	Application
a	Return spring setter A: 500 {20} 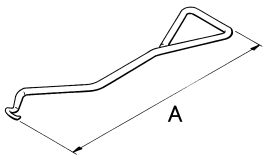 01610	03727-15001	Removal and installation of return spring
b	Anchor pin puller 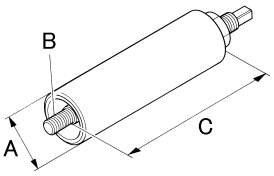 01611 A: ϕ60 {2.36}, B: M16 × 1.5, C: 173 {6.81}	03727-60000	Removal of anchor pin

◆Work before removal◆

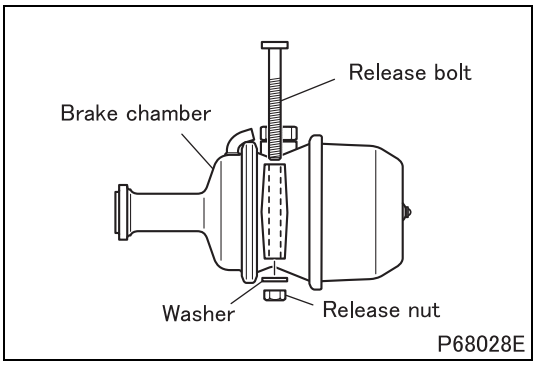

P68028E

■ Mechanical release of parking brake

- Release spring brake mechanically.
- Remove the release bolt, washer and release nut from the brake chamber.

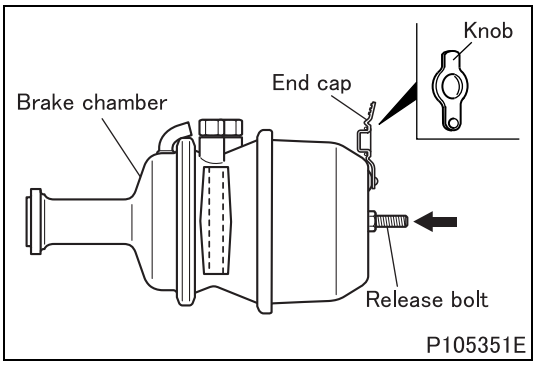

P105351E

- Remove the end cap without failling to pull up its knob by hand or using a plier or other tools.

CAUTION ⚠

- **Never remove the end cap by inserting a screwdriver or other tools into the brake chamber and prying it to open the chamber. Failure to observe the above can cause the brake chamber to be damaged, allowing water to intrude into the brake chamber. The water can cause rust on spring, leading to breakage in the spring.**

- Insert the release bolt deep into the chamber and turn it a quarter turn.
- Pull the release bolt to check that it does not come off the chamber.
- If the release bolt is pulled off, repeat the above procedure; insert the bolt deep into the chamber and turn it a quarter turn again.

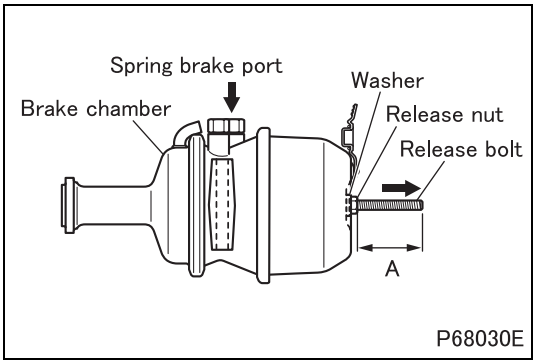

- Attach the washer and the release nut.
- While applying an air pressure of 640 kPa {92 psi, 6.5 kgf/cm^2} into the spring brake port (by setting the hand control valve to the released position), turn the release nut until the threaded portion of the release bolt extends by the dimension A shown below.
  A: 82 mm {3.23 in.} <FK>
  76 mm {2.99 in.} <FM>

CAUTION ⚠

- **Avoid turning the release nut with a torque exceeding 68.6 N·m {51 ft.lbs, 7 kgf·m}. It can damage the brake chamber assembly.**

◆Removal procedure◆

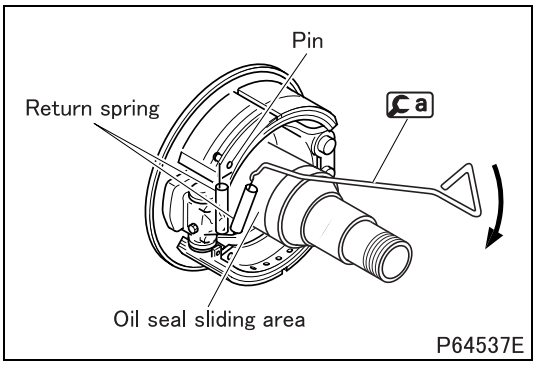

■ Removal: Return spring

- Fit a into the hooked part at one end of the return spring and use it to pry the return spring free.

CAUTION ⚠

- **Do not hook a onto the oil seal sliding portion of the knuckle.**

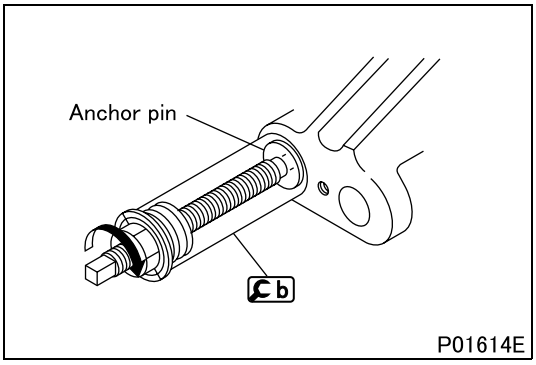

■ Removal: Anchor pin

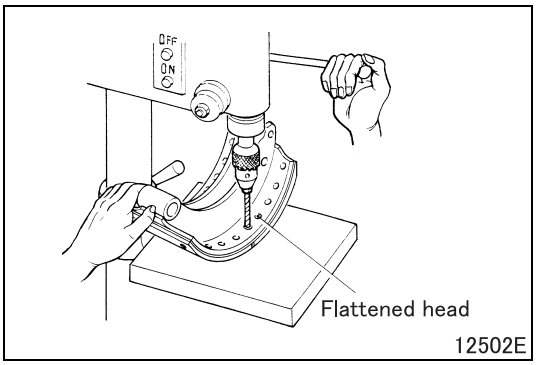

■ Removal: Brake lining

- Using a drilling machine, break the flattened rivet heads on the brake shoe side to release the brake lining.

◆Inspection procedure◆

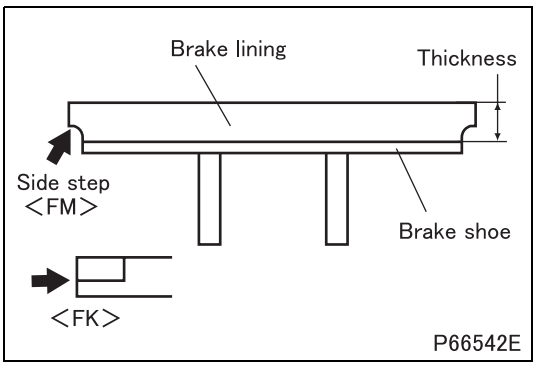

■ **Inspection: Brake lining thickness**

- If the brake lining is worn down to the side step, replace all brake linings on that axle.

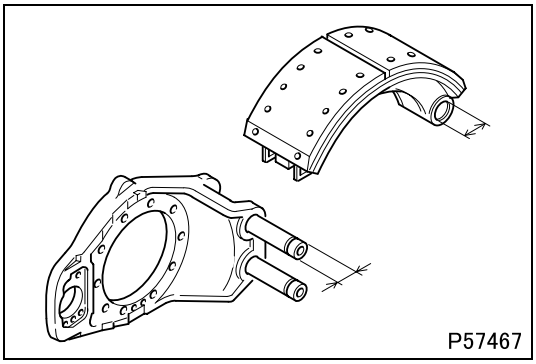

■ **Inspection: Clearance between anchor pin and bushing**

- If the measurement exceeds the limit, replace the bushing.

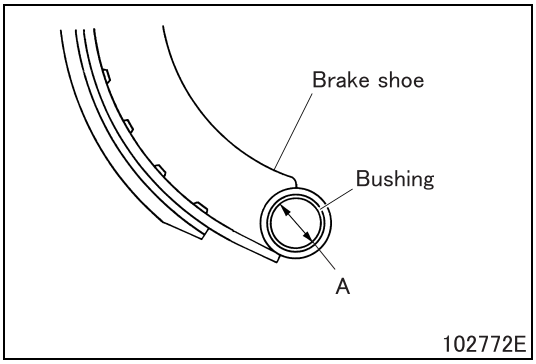

[Installation]

- With the bushing installed in the brake shoe, measure the inner diameter of the bushing.
- If the measured value is out of the dimension A shown below, ream the bushing.

  A: $30^{+0.05}_{0}$ mm {$1.18^{+0.002}_{0}$ in.} <FK>
  $35^{+0.05}_{0}$ mm {$1.38^{+0.002}_{0}$ in.} <FM>

◆Installation procedure◆

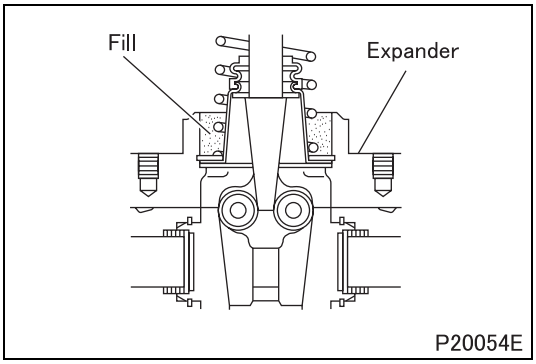

■ **Installation: Expander**

- Fill the expander with the specified quantity of grease as shown in the illustration.

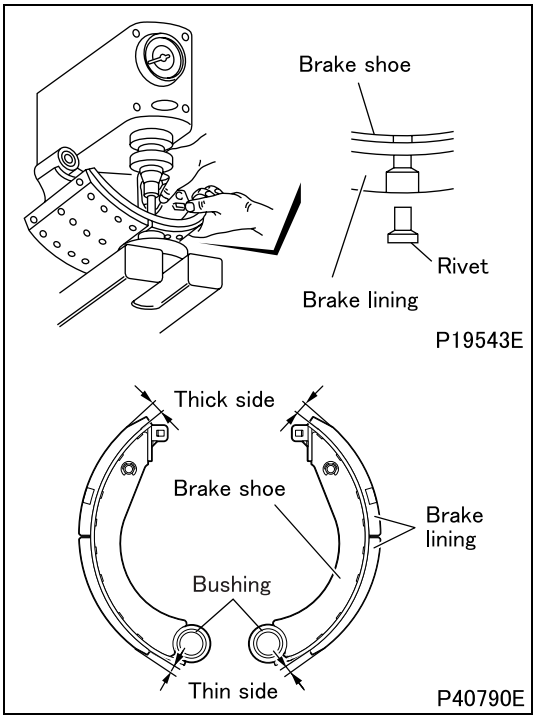

■ **Installation: Brake lining**

- Using cleaning fluid, clean the brake shoe surface to which the brake lining is to be mounted. Then, dry the shoe surface.
- Mount the brake lining on the brake shoe with the thin side of the brake lining pointing the bushing for the brake shoe.
- Insert rivets from the brake lining to the shoe. Stake them, starting from the center of the shoe towards the ends.
- The staking load for the rivets should be 19.6 ± 0.98 kN {4410 ± 220 lbs, 2000 ± 100 kgf}.

CAUTION ⚠

- **New replacement brake linings that are to be installed on the same axle should all be in the same size and have the same identification mark. Otherwise, braking performance can be different between the left and right wheels.**
- **The brake lining has a tapered end. If a lining is installed with its end pointing in the incorrect direction, poor braking performance or braking noise will be caused. <FK>**

- After assembly, check the brake drum-to-lining clearance. Correct as required.

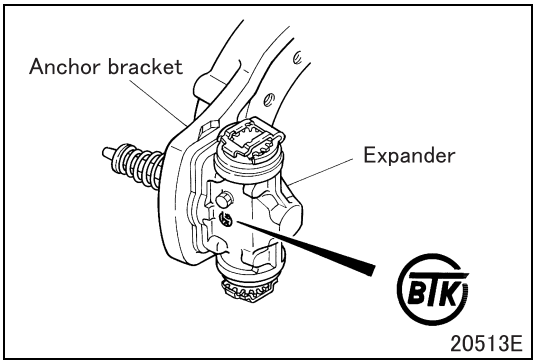

- Install the expander to the anchor bracket facing in the illustrated direction.

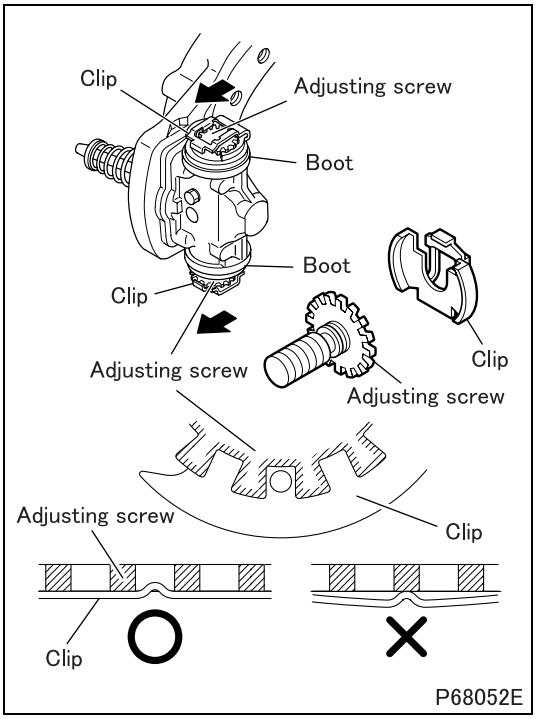

■ **Installation: Brake shoe**

- Turn adjusting screw of expander assembly fully clockwise by hand.
- Install clip with the open side facing the drum. Turn adjusting screw further clockwise to match the position if alignment is incorrect.

WARNING ⚠

- **Be sure to apply grease as required on the contact part of adjusting screw in boot; otherwise the auto adjuster may malfunction due to breakage of boot.**

CAUTION ⚠

- **Turn it slowly so that boot is not jammed.**
- **Be sure to keep the convex part of clip between teeth of adjusting screw (2 points).**

- If clip is misaligned, rotate adjusting screw counterclockwise by two revolutions so center of clip.

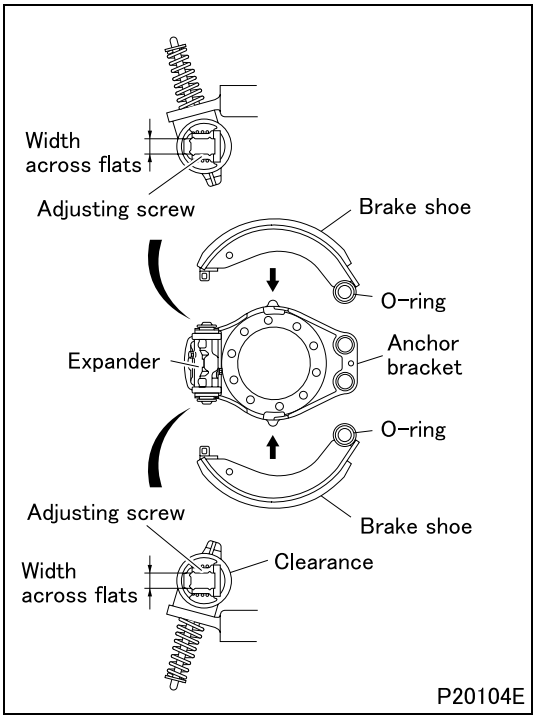

- Install brake shoes such that their end may accurately fall within the width across flats of clip.

CAUTION ⚠

- **When installing brake shoes, be careful not to damage clips and O-rings.**

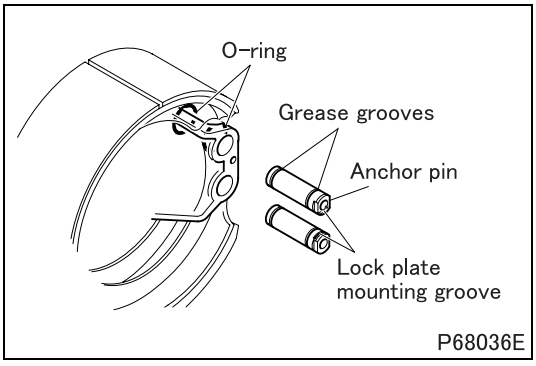

- Apply grease in grease grooves of the anchor pins.
- Install anchor pins in the illustrated direction.

CAUTION ⚠

- **Take care not to install anchor pins in the wrong direction. Otherwise, damaged O-rings will result.**

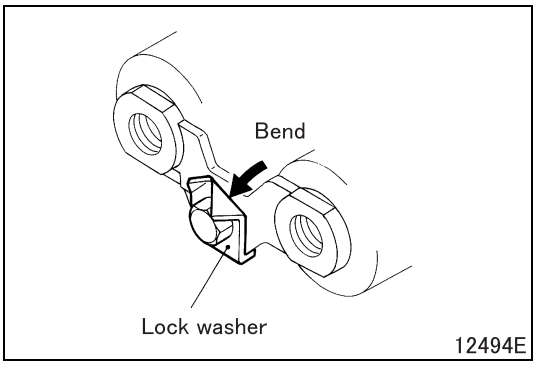

■ Installation: Lock washer

- After tightening the lock plate bolt to the specified torque, stake the lock washer at one location.

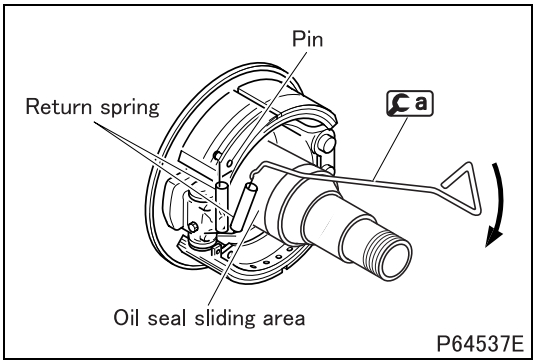

■ Installation: Return spring

- Fit the hooked part at one end of the return spring onto the pin in one of the brake shoe.
- Fit the hooked part at the other end of the return spring onto [a] and use [a] to fit it onto the pin in the other brake shoe assembly.

CAUTION ⚠

- **Do not hook [a] onto the oil seal sliding portion of the knuckle.**

◆Work after installation◆

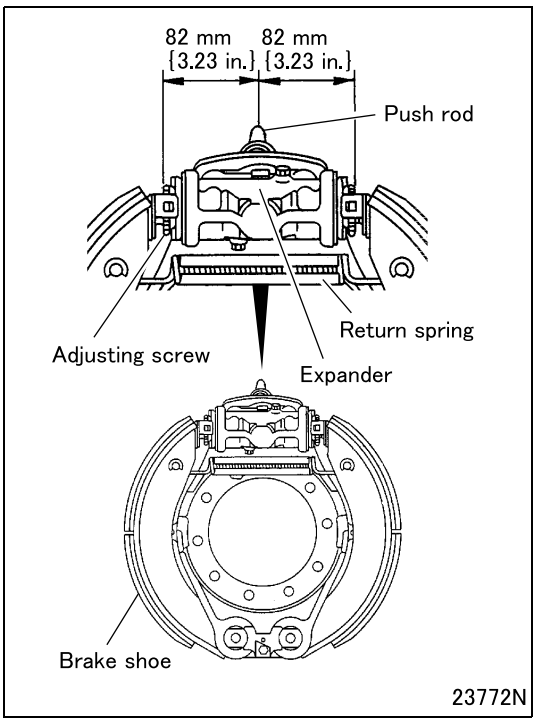

■ **Inspection: Check of operation**

- Ensure that the installed dimension of 82 mm {3.23 in.} is satisfied on the expander. If not, disassemble the expander and reinstall the adjusting screw(s). (See later section.)
- Reinstall the expander and brake shoes.
- Expand the brake shoes by pushing the push rod over its full stroke.
- Return the push rod to its original position and check whether the expander returns to the required dimension of 82 mm {3.23 in.}.
- If the results are unsatisfactory, check the force of the brake springs and the degree of stiffness in the brake shoes. Also inspect the expander again.

WARNING ⚠

- **Unless the check of operation after assembly is performed thoroughly, the automatic adjustment mechanism may not operate normally.**

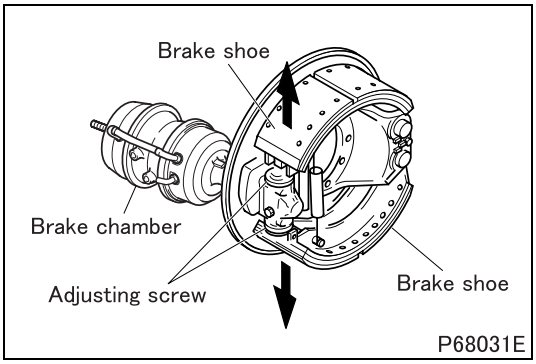

- If the brake chamber was disassembled, perform the following checks:
- Pull the brake shoes with a force of 20 to 30 N {4.4 to 6.6 lbs, 2 to 3 kgf} and make sure that the brake shoes do not move together with the adjusting screws of the expander.

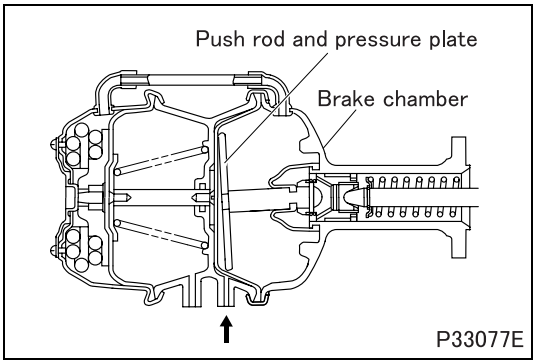

- If the brake shoes move, the push rod and pressure plate in the brake chamber are not fitted squarely. With the brake drum not fitted, press the brake pedal two or three times to position the push rod and pressure plate correctly.

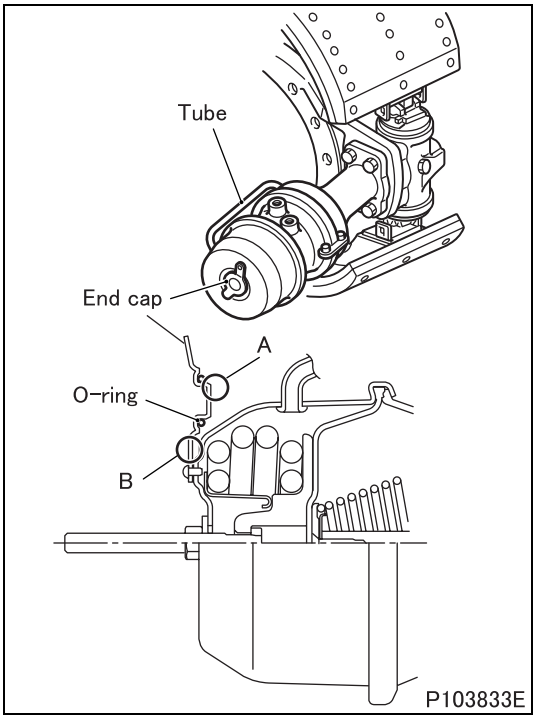

■ **Cancellation of mechanical release of parking brake**

- To cancel the mechanical release of parking brake, perform the mechanical release procedure in reverse while confirming the following items.
  (See "■ **Mechanical release of parking brake**".)
- Clean the end cap mounting position and confirm that there is no water or dust in that position.
- Confirm that an O-ring is attached to the end cap.
- Using a ϕ15 mm or thinner rod with a dull end such as a release bolt, push in the concave section at the center of the end cap squarely into the piggy back. A click is heard when the section A is securely seated into the piggy back.
- When seating the end cap, be careful not to bend or twist the section B.
- Confirm that there is no damage on the tube and the tube is installed securely.

M E M O

REAR WHEEL BRAKE

Brake Chamber Assembly

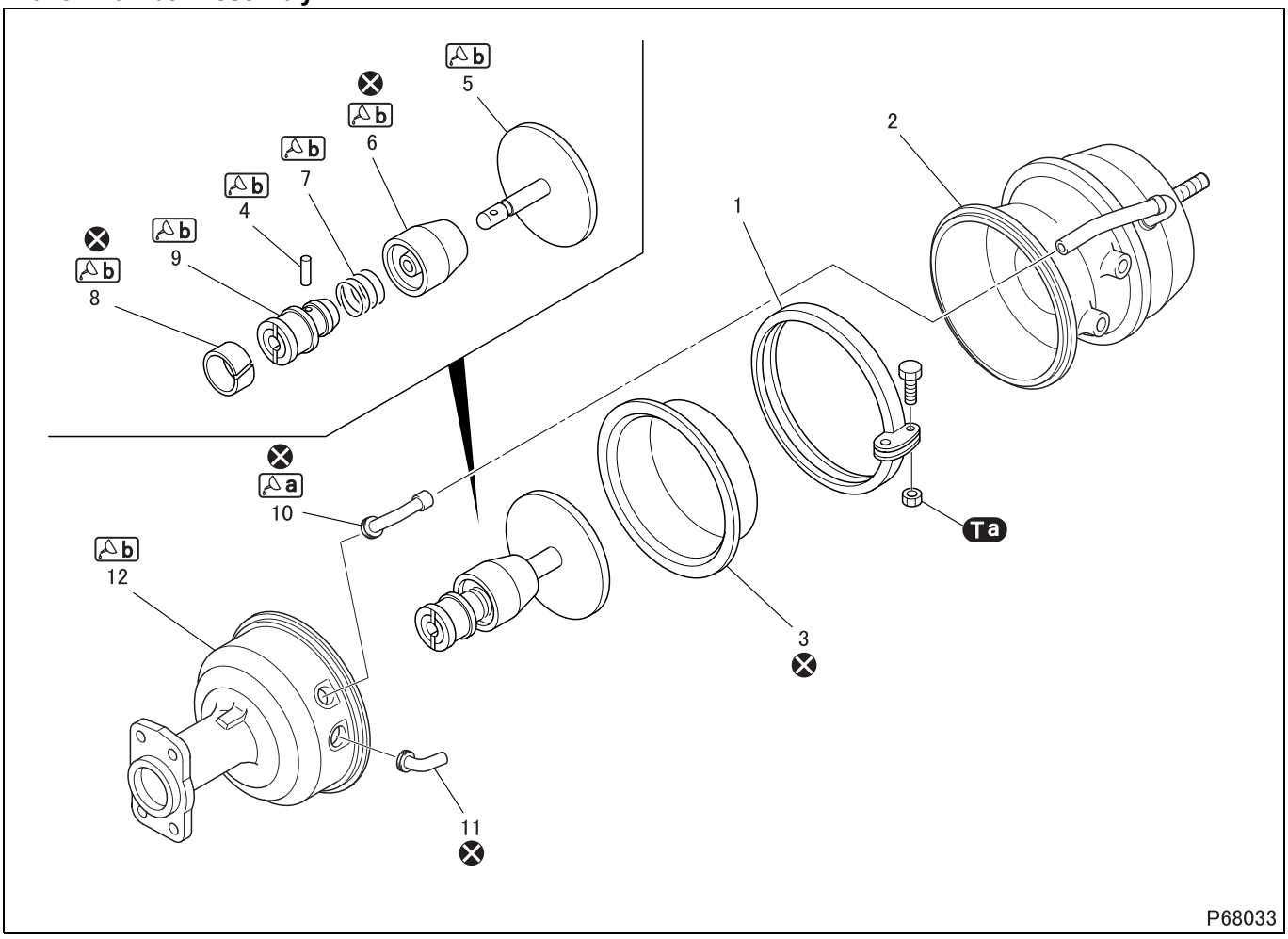

● **Disassembly sequence**

1 Clamp ring
2 Piggy back
3 Diaphragm
4 Pin
5 Push rod and pressure plate
6 Dust cover
7 Ring
8 Bushing
9 Push rod guide
10 Elbow A
11 Elbow B
12 Base

⊗: Non-reusable parts

WARNING ⚠

- **Never attempt to disassemble the piggy back. Doing so is extremely dangerous as the piggy back houses an extremely strong spring.**

● **Assembly sequence**

Follow the disassembly sequence in reverse.

Repair kit: Spring chamber kit

CAUTION ⚠

- **Keep diaphragm free from oil and grease. Oily or greasy diaphragm can come off position.**

Tightening torque (Unit: N·m {ft.lbs, kgf·m})

Mark	Parts to be tightened	Tightening torque	Remarks
Ta	Nut (clamp ring mounting)	14.7 to 20.0 {11 to 15, 1.5 to 2.0}	–

Lubricant and/or sealant

Mark	Points of application	Specified lubricant and/or sealant	Quantity
a	Surface of elbow on which tube is mounted	Loctite 414	As required
b	Each contact surface	Multipurpose grease [NLGI No. 2 (Li soap)]	As required

◆Work before disassembly◆

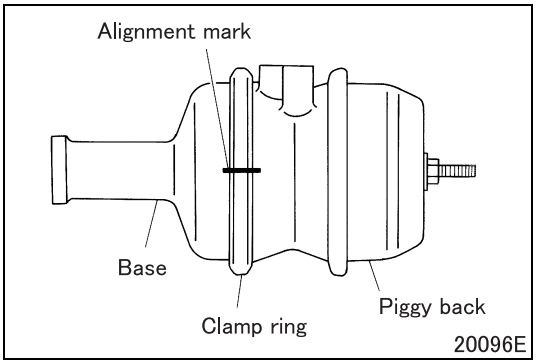

■ **Alignment mark: Brake chamber**

- Put an alignment mark and then disassemble the clamp ring, pressure plate and base.

EXPANDER

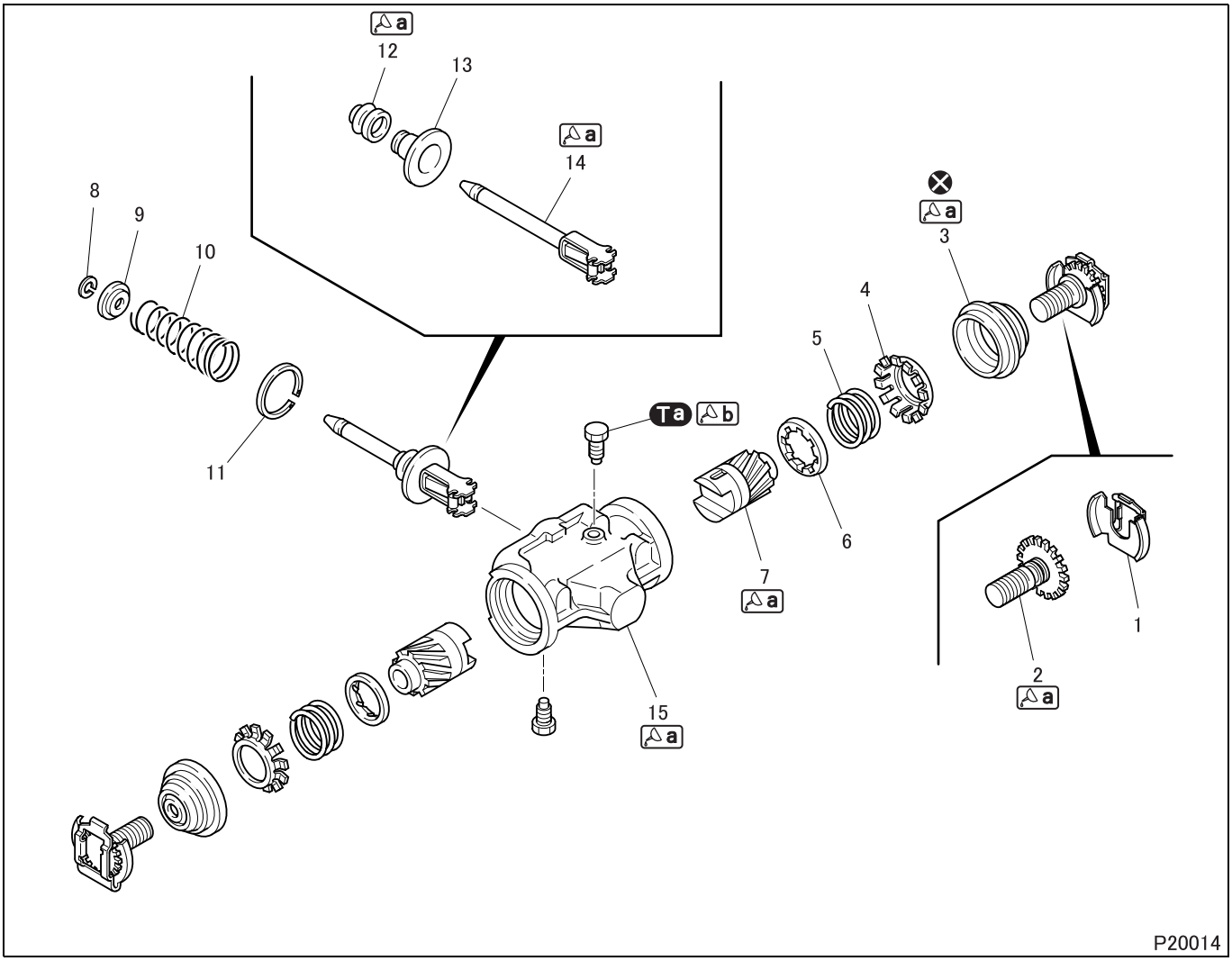

● **Disassembly sequence**

1 Clip
2 Adjusting screw
3 Boot
4 Spring cage
5 Spring
6 Drive ring
7 Sleeve
8 Snap ring
9 Retainer
10 Spring
11 Snap ring
12 Boot
13 Cap
14 Wedge and roller
15 Body

⊗: Non-reusable parts

● **Assembly sequence**

Follow the disassembly sequence in reverse.

Service standards (Unit: mm {in.})

Location	Maintenance item		Standard value	Limit	Remedy
–	Operating force of expander automatic adjusting mechanism (sleeve push back force)		147 N {33 lbs, 15 kgf} or less	–	Replace
1	Clip holding torque		1.5 to 5.0 N·m {1.1 to 3.6 ft.lbs, 0.15 to 0.5 kgf·m}	–	Replace
5	Spring load (installed length 11.3 {0.44})		83.4 N {19 lbs, 8.5 kgf}	73.6 N {17 lbs, 7.5 kgf} or less	Replace
10	Spring load (installed length 105.8 {4.17})		147 N {33 lbs, 15 kgf}	132.3 N {30 lbs, 13.5 kgf} or less	Replace
6, 7	Backlash between drive ring and sleeve		2.9 to 3.4 {0.11 to 0.13}	–	Replace
7	Rotating torque of sleeve <FK>	Clockwise	0.13 to 0.25 N·m {0.1 to 0.2 ft.lbs, 0.013 to 0.025 kgf·m}	–	Replace
		Counterclockwise	2.0 N·m {1.4 ft.lbs, 0.20 kgf·m} or more	–	Replace
7, 14	Depression of wedge roller rolling surface of sleeve		–	0.010 {0.00039} or less	Replace
15	Wear of body bore		ϕ38.1 to 38.2 {1.500 to 1.504}	ϕ38.23 {1.505} or more	Replace

Tightening torque (Unit: N·m {ft.lbs, kgf·m})

Mark	Parts to be tightened	Tightening torque	Remarks
Ta	Screw	15 ± 3 {11 ± 2.2, 1.5 ± 0.3}	–

Lubricant and/or sealant

Mark	Points of application		Specified lubricant and/or sealant	Quantity
a	Adjusting screw thread		Wheel bearing grease [NLGI No. 2 (Li soap)]	As required
	Surface of boot in contact with adjusting screw			
	Sleeve outer periphery, threads, and surfaces in contact with roller			
	Appearance of rollers of wedge and roller			2 g {0.071 oz}
	Contact surface of wedge and roller of boot			As required
	Body (inside surface)	Coat		
		Fill		8 g {0.28 oz}
b	Thread of screw		Loctite 202 or ThreeBond 2415	As required

Special tools (Unit: mm {in.})

Mark	Tool name and shape	Part No.	Application
a	Clip adapter 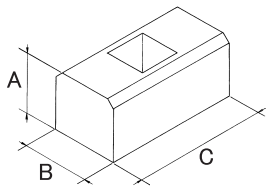 19111 <table><tr><th>A</th><th>B</th><th>C</th></tr><tr><td>18 {0.71}</td><td>20 {0.79}</td><td>40 {1.57}</td></tr></table>	MC889860	Measurement of clip holding torque and sleeve rotation torque
b	Boot setter 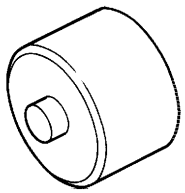 19000	MC889862	Installation of boot
c	Spring holder 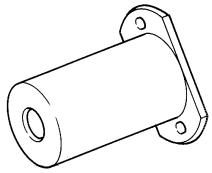 18999	MC889861	Removal and installation of spring

◆Removal procedure◆

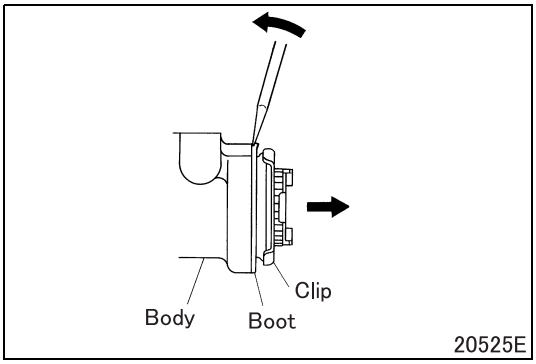

20525E

■ **Removal: Adjusting screw and boot**

- Using a flat-blade screwdriver, break the connection between boot and body.
- Turn adjusting screw assembly counterclockwise to remove the adjusting screw assembly together with boot.

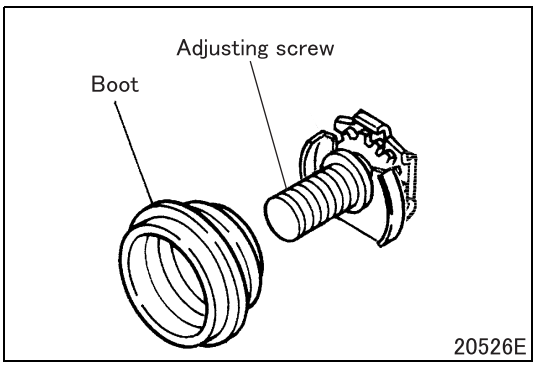

20526E

- Remove boot from adjusting screw assembly.

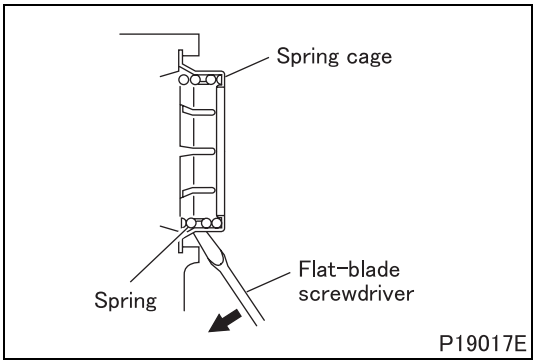

■ **Removal: Spring cage**

- Remove spring cage while holding it with fingers so as to prevent spring from springing out.

WARNING ⚠

- **Be careful of spring springing out.**

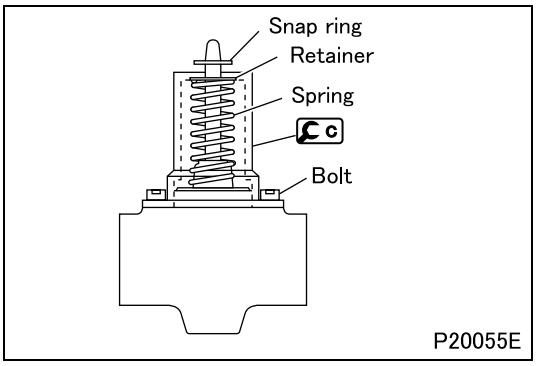

■ **Removal: Spring**

- Secure c with bolts to compress the spring.
- Remove snap ring.
- Remove bolts and c.

WARNING ⚠

- **When removing bolts, be careful of spring springing out.**

- Remove retainer and spring.

◆Inspection procedure◆

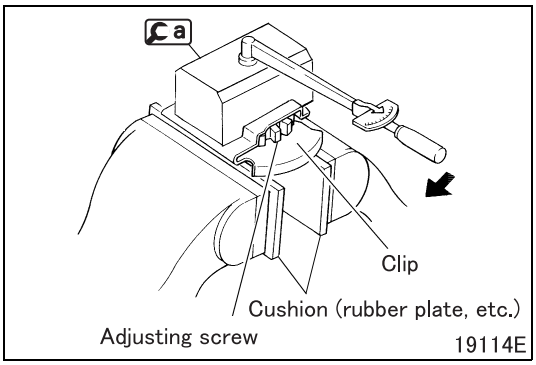

■ **Inspection: Clip**

- Clamp adjusting screw in a vise.

CAUTION ⚠

- **Use cushions such as rubber plates between jaws to prevent damage to adjusting screw. Damaged threads of the adjusting screw can cause the automatic adjusting mechanism to fail to operate properly.**

- Attach a to the clip.
- The reading when clip starts to turn shows the holding torque.
- If the measured value deviates from the standard value, replace the clip.

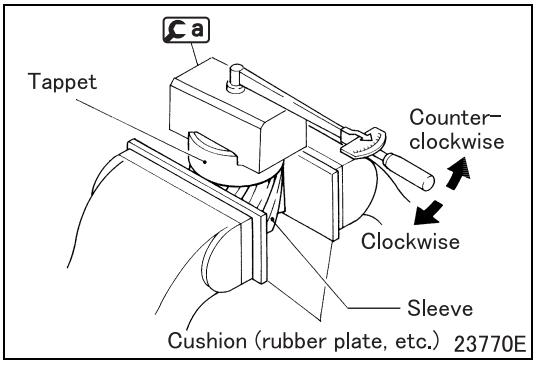

■ **Inspection: Rotating torque of sleeve <FK>**

- Clamp sleeve assembly in a vise.
- Install a.
- Read the torque when tappet starts to turn.
- If the measured value deviates from the standard value, replace the sleeve.

■ **Inspection: Damage on clips, boots and caps**

- If any damage such as deformation, break, crack or wear is found, replace the faulty part.

■ **Inspection: Wear of roller sliding surface on sleeve and wedge and roller**

- If a stepped wear is found on the roller sliding surface, measure the amount of wear.
- If the measurement exceeds the service limit, replace the sleeve.

◆Installation procedure◆

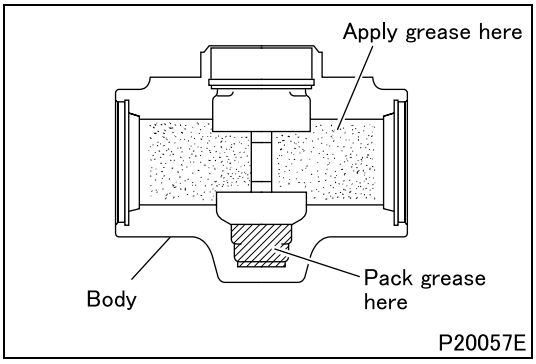

■ **Installation: Body**

- Coat inner surface of the body with grease.
- Fill the portion shown in the illustration with grease.

■ **Installation: Spring**

- Install the spring following the removal procedure in reverse. (See "■ **Removal: Spring**".)

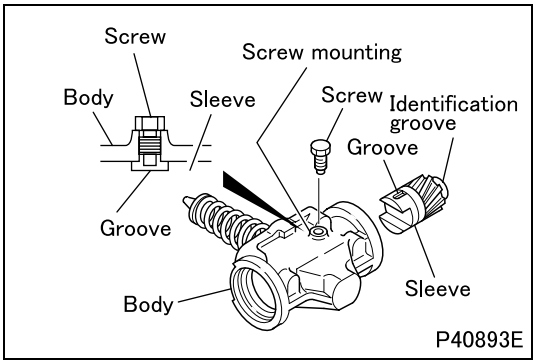

■ **Installation: Sleeve**

- The sleeve to be used differs from each other depending on the type of brake. Select a proper sleeve for the brake by checking the identification grooves provided in the tip of the sleeve.
  2 identification grooves <FK>
  No identification groove <FM>
- Apply grease to the outer periphery, threaded area and roller contacting surface of sleeve.
- Align slot in sleeve with screw fitting hole in body to fit the sleeve.
- Apply sealant to the threads of screw and tighten the screw to the specified torque.

NOTE

- **If screw is not inserted up to the position shown, the screw is possibly not in slot in sleeve.**

- Check that sleeve does not fall off.

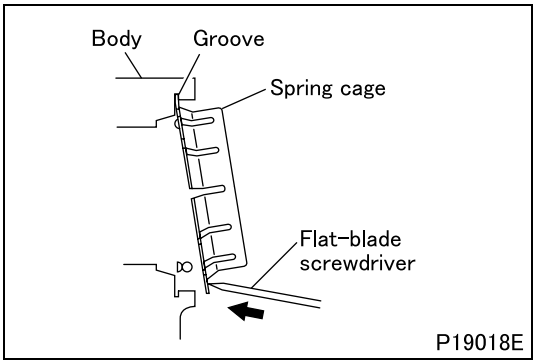

■ **Installation: Spring cage**

- Fit one side of the spring cage into the groove of the body.
- Using a flat-blade screwdriver, push the other side of spring cage in position.

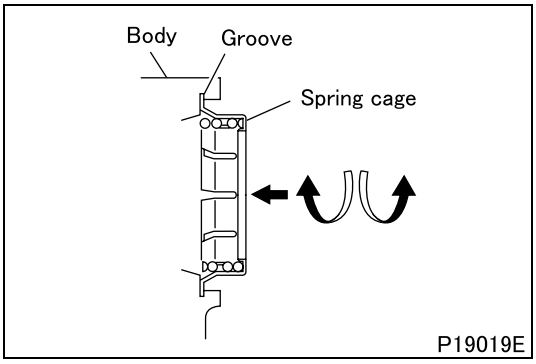

- To check that the spring cage is securely fitted in the groove of the body, turn the spring cage while pushing it. If it turns smoothly, it shows proper fit.

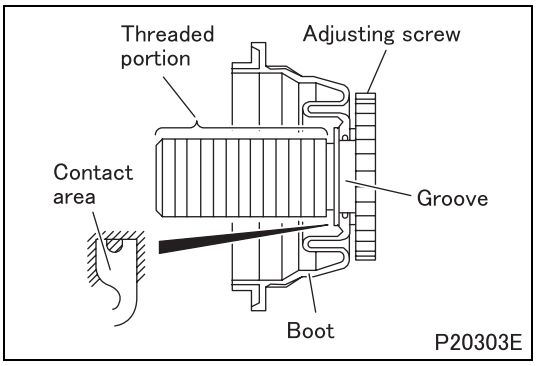

■ **Installation: Adjusting screw and boot**

- Apply grease to the boot at the contacting area with the adjusting screw and to the thread area of the adjusting screw.
- Fit the boot into the groove of adjusting screw.

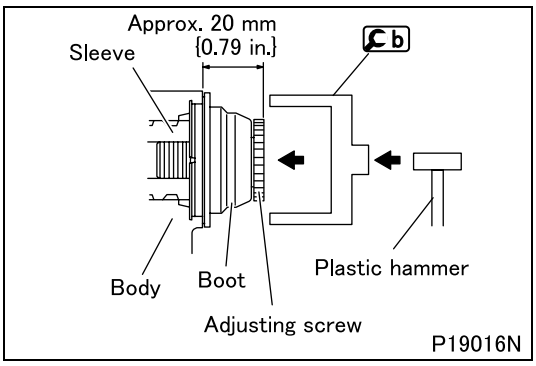

- Screw the adjusting screw in the sleeve until the end face to end face distance between the adjusting screw and the body is approx. 20 mm {0.79 in.}.
- Lightly pull at the adjusting screw to make sure that the sleeve slides.
- Press-fit the boot with b.

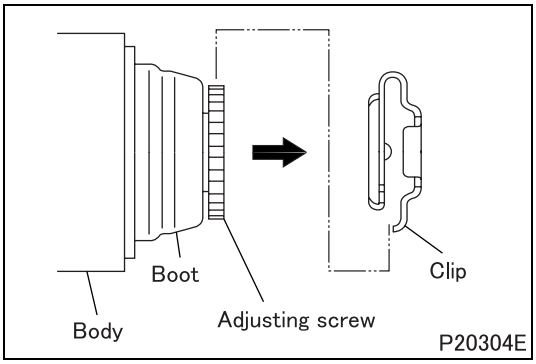

■ **Installation: Clip**

- To facilitate fitting the clip to the adjusting screw, turn the adjusting screw until it comes off the boot.
- Fit the clip.

CAUTION ⚠

- **Use care not to damage boot when fitting the clip.**

◆Inspection after installation◆

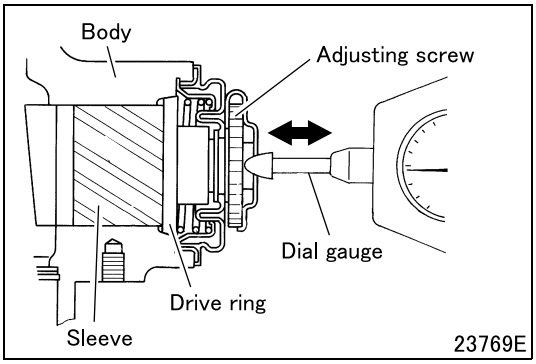

■ **Inspection: Backlash between drive ring and sleeve**

- Apply the probe of the dial gauge to the adjusting screw and move the assembly in the arrow direction to measure the backlash between the drive ring and the sleeve.
- If the measured value deviates from the standard value, replace the drive ring and sleeve.

CAUTION ⚠

- **When measuring the backlash, be careful so that the drive ring, pushed by the sleeve, does not move off from the body.**

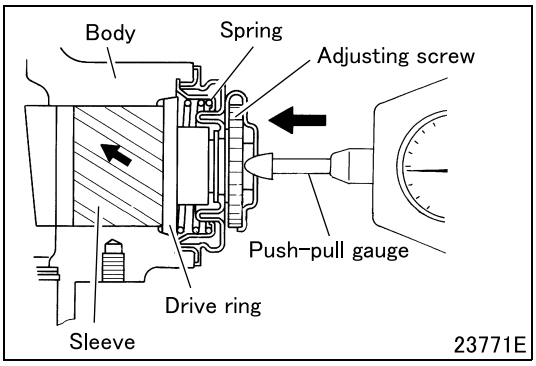

■ **Inspection: Automatic adjuster mechanism actuating force**

- Pull the adjust screw (as much as it cannot be pulled any further). This makes the sleeve to push the drive ring against the force of the spring and the drive ring comes apart from the body.
- Back off the adjust screw (as much as possible with light force) in the direction of the arrow until the backlash between the drive ring and sleeve is eliminated.
- Using a push-pull gauge, push the adjust screw in the direction of the arrow. While doing this, note the maximum reading on the gauge.
- If the measurement deviates from the standard value, replace the sleeve.

M E M O

RELAY VALVE

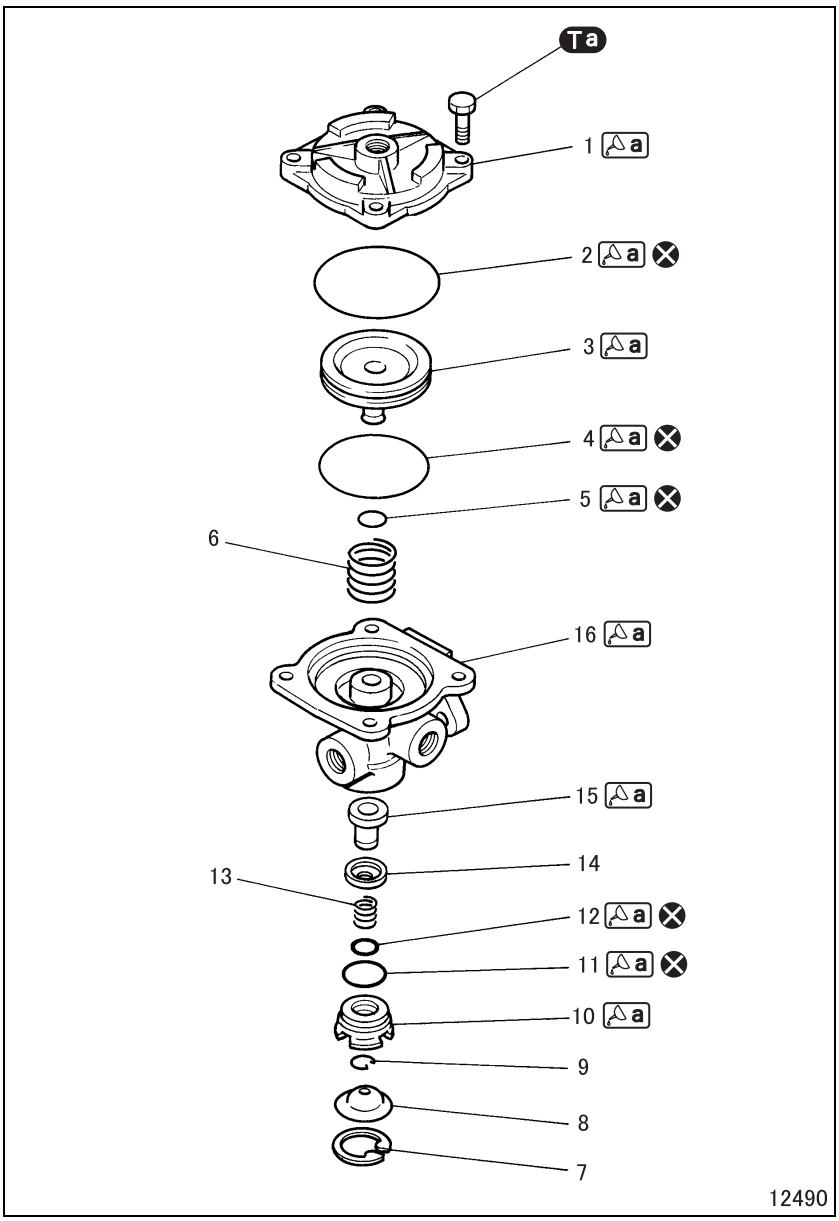

● **Disassembly sequence**

1 Cover
2 O-ring
3 Relay piston
4 O-ring
5 O-ring
6 Spring
7 Retaining ring
8 Exhaust cover
9 Retaining ring
10 Valve guide
11 O-ring
12 O-ring
13 Spring
14 Valve retainer
15 Inlet valve
16 Body

⊗: Non-reusable parts

● **Assembly sequence**

Follow the disassembly sequence in reverse.

Repair kit : Relay valve kit

Service standards (Unit : mm {in.})

Location	Maintenance item	Standard value	Limit	Remedy
6	Spring load (installed length 10.3 {0.41})	16 N {3.6 lbs, 1.65 kgf}	13 N {3.0 lbs, 1.35 kgf}	Replace
13	Spring load (installed length 15.7 {0.62})	29 N {6.6 lbs, 3.0 kgf·m}	24 N {5.3 lbs, 2.4 kgf}	Replace

Tightening torque (Unit: N·m {ft.lbs, kgf·m})

Mark	Parts to be tightened	Tightening torque	Remarks
Ta	Bolt (cover and body mounting)	12 to 19 {8.7 to 14, 1.2 to 1.9}	–

Lubricant and/or sealant

Mark	Points of application	Specified lubricant and/or sealant	Quantity
a	Friction surface of cover and piston	Multipurpose grease [NLGI No. 2 (Li soap)]	As required
	Periphery of O-ring		
	Friction surface of inlet valve and valve guide		
	Friction surface of body and piston		

◆Adjustment after installation◆

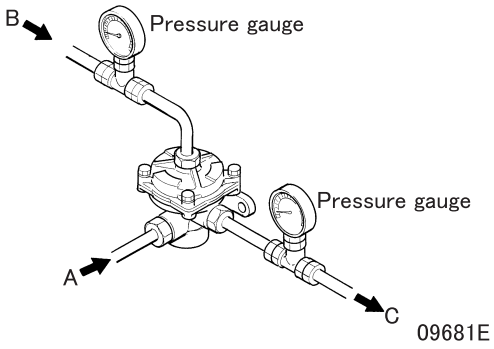

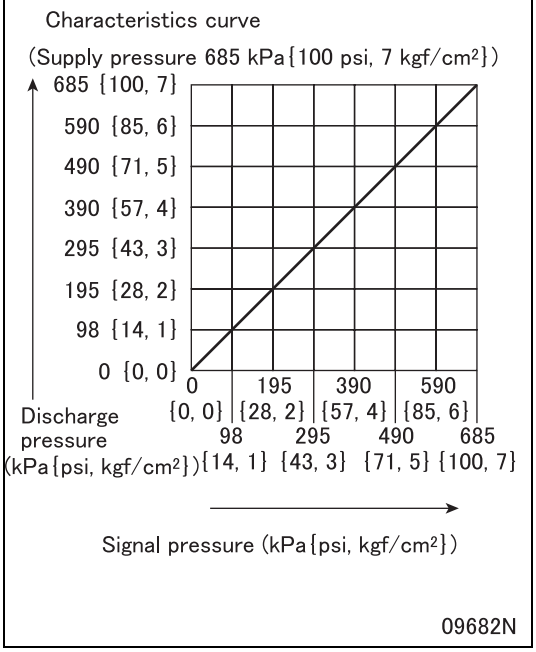

■ Adjustment: Relay value

- Mount the gauges on the pipes as illustrated. Apply pressurized air to air supply port A and indicated pressure port B, and measure the difference in operating pressure between the indicated pressure and the discharge pressure.

  Operational pressure difference : 25 kPa {3.6 psi, 0.25 kgf/cm^2}
  C: Discharge port

  If any fault is found, replace springs.

Group 35E

Anti-lock Brake System (ABS)

Table of Contents

Back

Home

MITSUBISHI FUSO TRUCK OF AMERICA, Inc.

Pub.No.TWME0709-35E

INDEX

SPECIFICATIONS 35E-2

STRUCTURE AND OPERATION

1. General Description 35E-4
2. Electronic Control System 35E-10
3. Electronic Control Unit Schematic Diagram 35E-12

TROUBLESHOOTING

1. Diagnosis Procedure 35E-14
2. Diagnostic Precautions 35E-14
3. Inspection Based on Diagnosis Codes 35E-15
4. Multi-Use Tester Service Data 35E-32
5. Electronic Control Unit Information Display 35E-32
6. Actuator Test Using Multi-Use Tester 35E-33
7. Inspection at Electronic Control Unit Connector 35E-36

ON-VEHICLE INSPECTION AND ADJUSTMENT

1. Functional Check 35E-38
2. Oscilloscopic Inspection through Wheel Speed Sensor Signal Waveform 35E-42

INSPECTION OF ELECTRICAL COMPONENTS 35E-44

COMPONENTS LOCATION 35E-46

ELECTRICAL WIRING DIAGRAM 35E-50

SPECIFICATIONS

Item		Specifications
Control system		Electric/pneumatic type (control valve)
Control valve	Manufacturer	Knorr-Bremse Commercial Vehicle Systems Japan
	Rated voltage V	DC12
Wheel speed sensor	Manufacturer	Sumitomo Electric
	Type	Magnetic pickup
Anti-lock brake system electronic control unit	Manufacturer	Knorr-Bremse Commercial Vehicle Systems Japan
	Rated voltage V	DC12

M E M O

1. General Description

- The anti-lock brake system (ABS) prevents wheel lock-up and resultant skid that can occur when the brakes are applied hard or on slippery roads and thereby maintains vehicle stability and steerability.

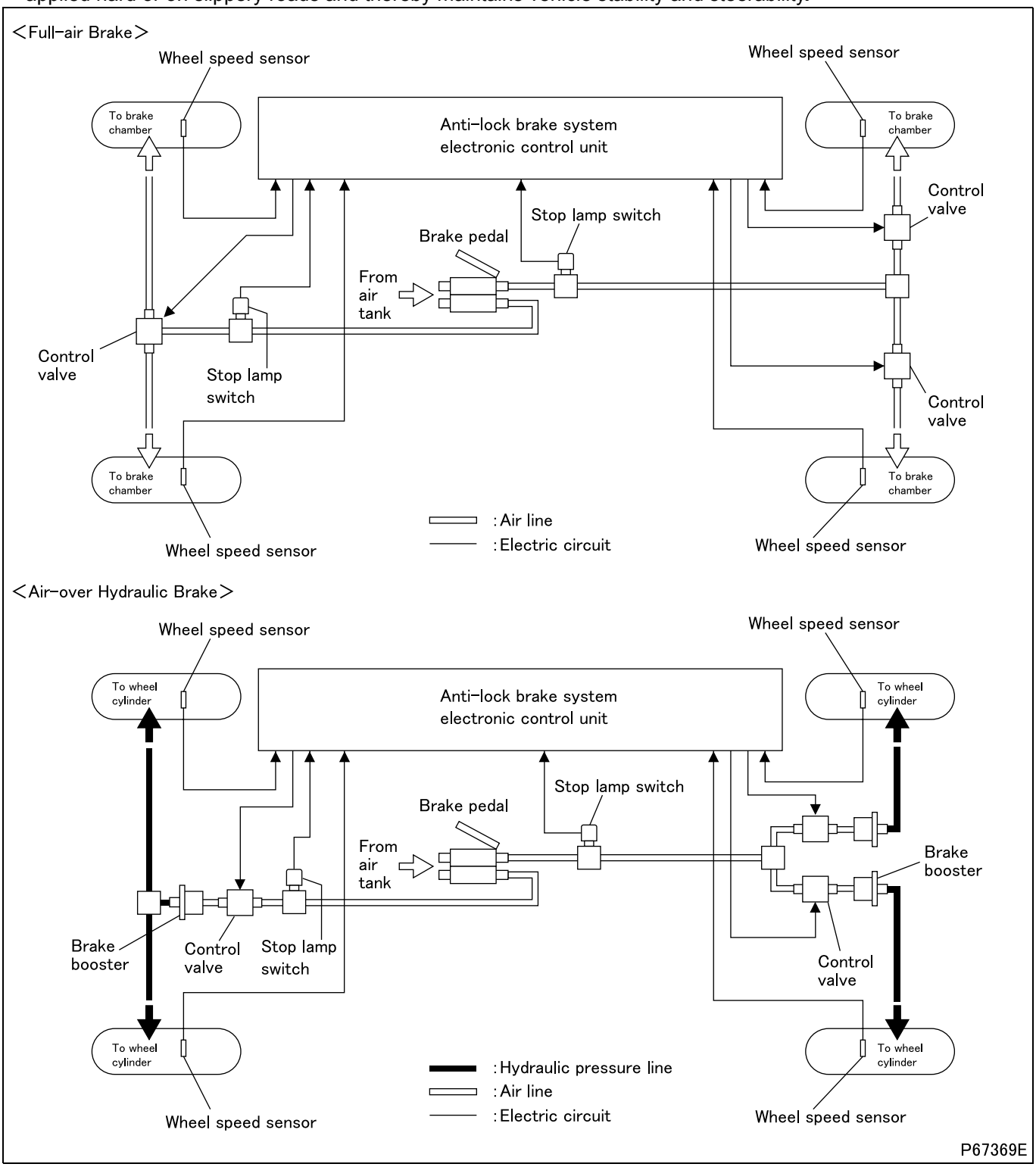

- Shown above is not a piping diagram but an illustration for explaining about the structure and operation of the anti-lock brake system. For details of the system piping diagram, see Gr35.

1.1 Outline of anti-lock brake system

- Wheels rolling on the road will move along in the selected direction of their rotation. Therefore, the driver can steer the vehicle as he or she wishes by maneuvering the steering wheel.
  However, if the brake pedal is pressed all the way and the wheels are locked up, the tires will be no longer able to maintain their direction and become nothing but mere pieces of rubber that are in contact with the road surface. As a result, the tires will not roll as steered but slip in any direction of inertia. In other words, when a wheel lock-up occurs, the vehicle loses stability and steerability and goes beyond the driver's control.
- The anti-lock brake system prevents a wheel lock-up by reducing the braking power to the wheel that developed a tendency to lock-up, thereby ensuring vehicle stability and steerability.

(1) Wheel lock-up on slippery curve

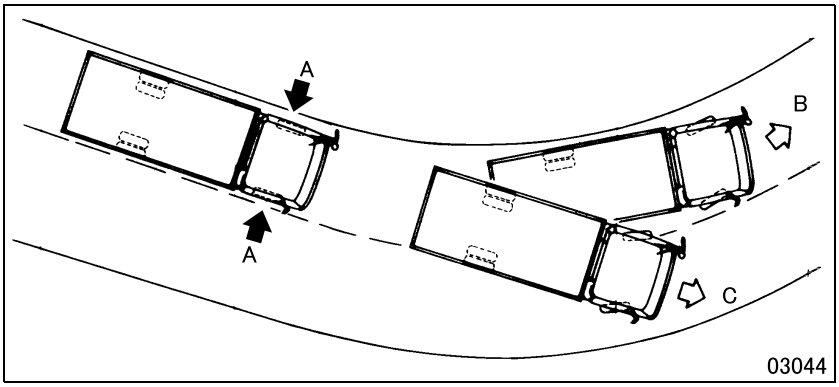

- If a wheel lock-up occurs during braking on a slippery curve, the vehicle will lose steerability and may skid out of the intended course no matter how the driver manipulates the steering wheel.
  A: Brakes application point (wheel lock-up)
  B: Intended course
  C: Skidding out of course

(2) Wheel lock-up on slippery straight road

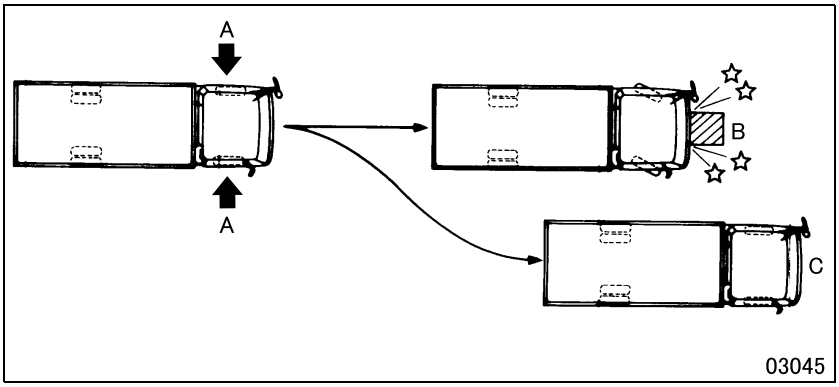

- If a wheel lock-up occurs on a slippery straight road during hard braking in an attempt to avoid an obstacle ahead, the vehicle will lose steerability and will not able to avoid the obstacle no matter how the driver maneuvers the steering wheel.
  A: Brakes application point (wheel lock-up)
  B: Obstacle
  C: Course to avoid obstacle

(3) Split μ (wheel lock-up on road surface different in coefficient of friction between left and right sides)

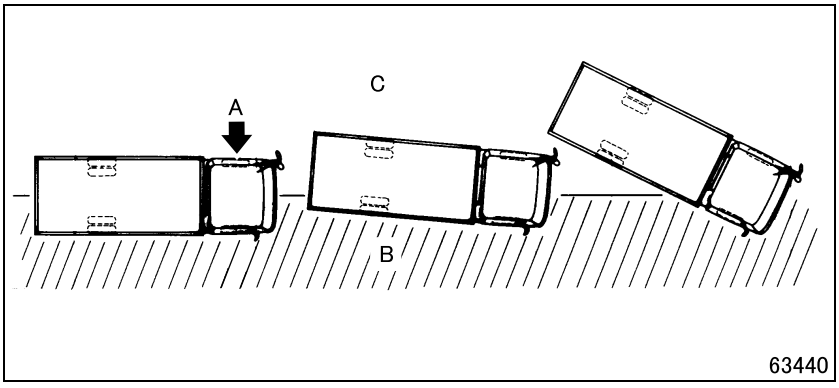

- Tires in contact with one side of the road that has a smaller coefficient of friction tend to slip more easily than those on the other side and lock up first. In this state, braking efficiency is out of balance between the wheels and the vehicle can lose stability and go out of steering control. Braking hard under such conditions can cause the vehicle to spin.
  A: Brakes application point (wheel lock-up)
  B: Less slippery road surface
  C: More slippery road surface

- The anti-lock brake system prevents wheel lock-up by providing optimally controlled braking force to each wheel and thus ensures vehicle stability and steerability without wheel slip and skid even during hard braking.

1.2 Anti-lock brake system control process

- According to the road surface condition, the anti-lock brake system controls the braking power in relation to the slip ratio dependent on wheel speed versus vehicle speed to ensure most efficient braking performance.
- Pressing the brake pedal retards the rotation of wheels and the vehicle slows down as a result. However, the vehicle is forced to move on by the inertia that has built up in the meantime. This causes a difference between the wheel and vehicle speeds resulting in a slip. The extent of the slip can be expressed by slip ratio as follows.

$$\text{Slip ratio (\%)} = \frac{\text{Vehicle speed} - \text{Wheel speed}}{\text{Vehicle speed}} \times 100$$

- A slip ratio of 0% means that there is no slip between the wheel and road surface. A slip ratio of 100% represents a wheel lock-up.

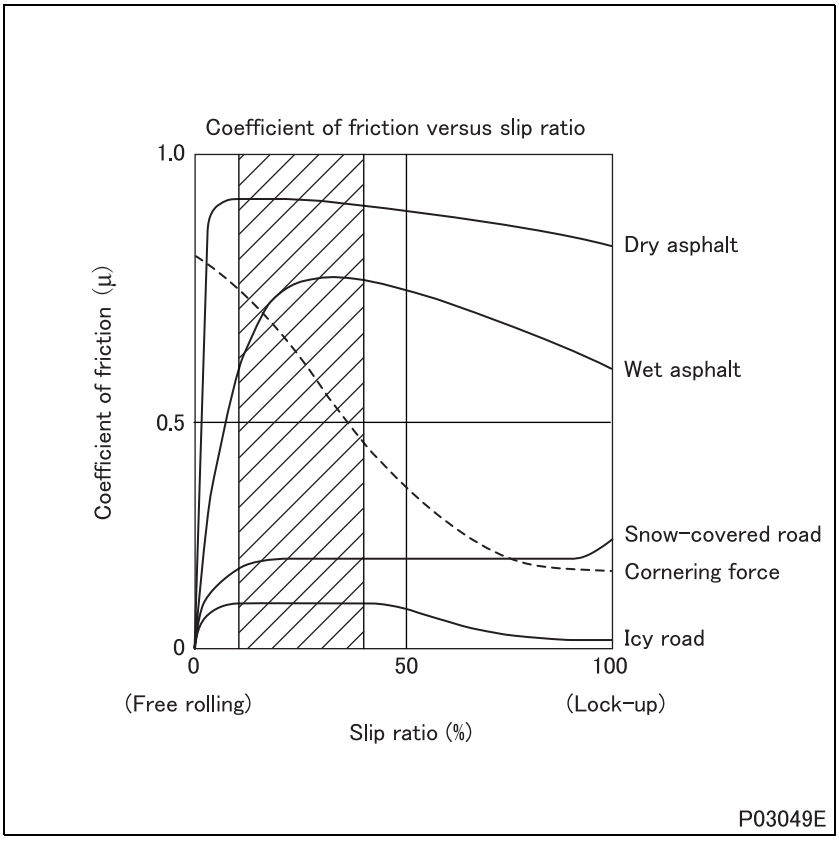

- The graph shows the change in the tire's coefficient of friction during the process of free rolling to lock-up; as the brake pedal is gradually pressed, the tires begin to slip while rolling along on the road surface.
- Pressing the brake pedal further causes the tires to stop rolling and only slip. This is a wheel lock-up.
- As the graph shows, the coefficient of friction peaks when the slip ratio comes within the hatched range.
- In other words, the maximum coefficient of friction of the tires can be obtained if the slip ratio is brought within the hatched range by applying the brakes, not hard but moderately.
- On vehicles equipped with anti-lock brake system, the electronic control unit controls the braking force to be within the hatched range so that the tires are not locked but have a maximum coefficient of friction, thereby ensuring stable braking performance.

(1) Anti-lock brake system control cycle

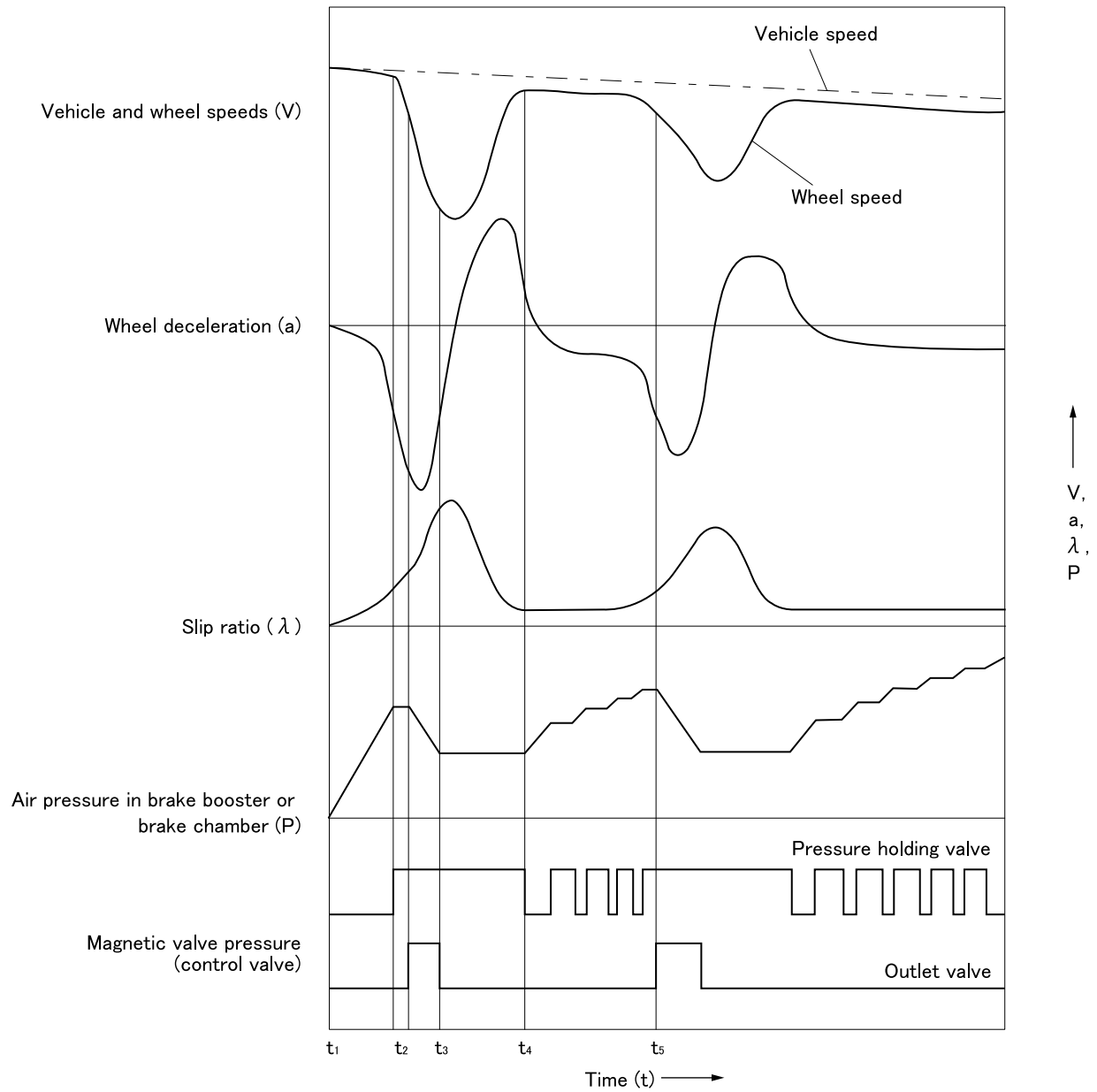

- The above chart depicts the control characteristics of the anti-lock brake system, indicating changes in vehicle speed, wheel speeds and brake booster or brake chamber air pressures with the lapse of time (t) after the application of brakes.
- The electronic control unit computes the wheel speeds while estimating the vehicle speed according to wheel speed sensor output signals received and thus constantly monitors wheel slip ratio and wheel deceleration.
- When the electronic control unit detects a wheel lock-up being imminent, it sends control signals to the appropriate magnetic valves in the control valves. Required anti-lock control is thus effected as shown in the above chart.

1.3 Control valve

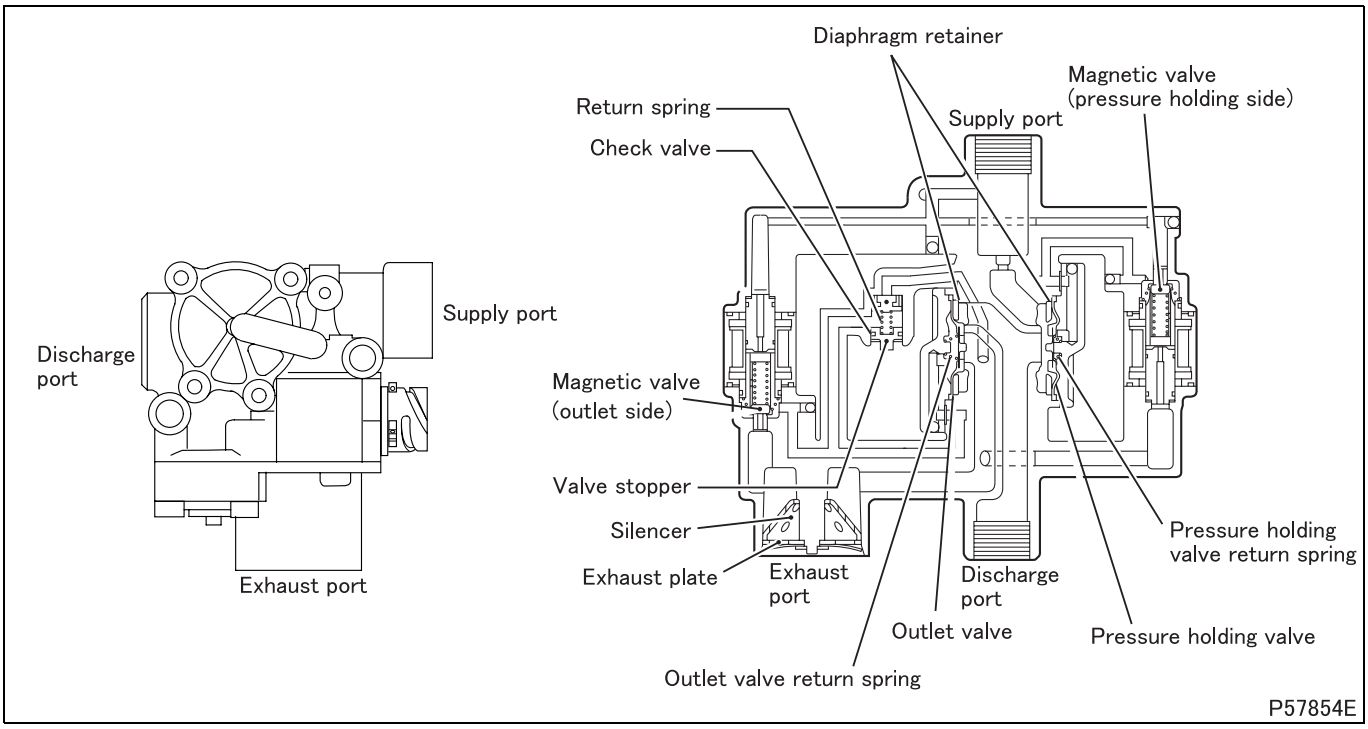

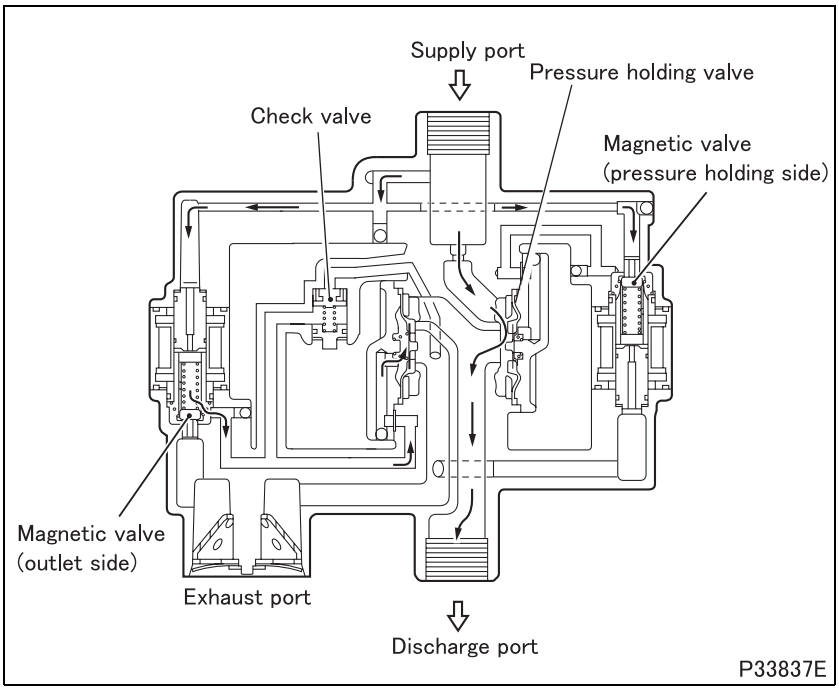

(1) Normal braking

- At normal braking, if there is no wheel lock-up tendency, the magnetic valve does not actuate. Air pressure that is the same as that from the dual brake valve is pressure-fed to the brake booster or brake chamber.
- Normally, the air pressure from the air discharge port is released from the exhaust port when the brake pedal is disengaged, but if the exhaust port is blocked by freezing, etc., the air pressure at the discharge port acts upon the pressure holding valve causing drag of the brakes.
  In this case, the air pressure from the discharge port is discharged from the supply side of the magnetic valve (outlet side) by the check valve.
  Supply port:
  from dual brake valve
  Discharge port:
  to brake chamber or brake booster

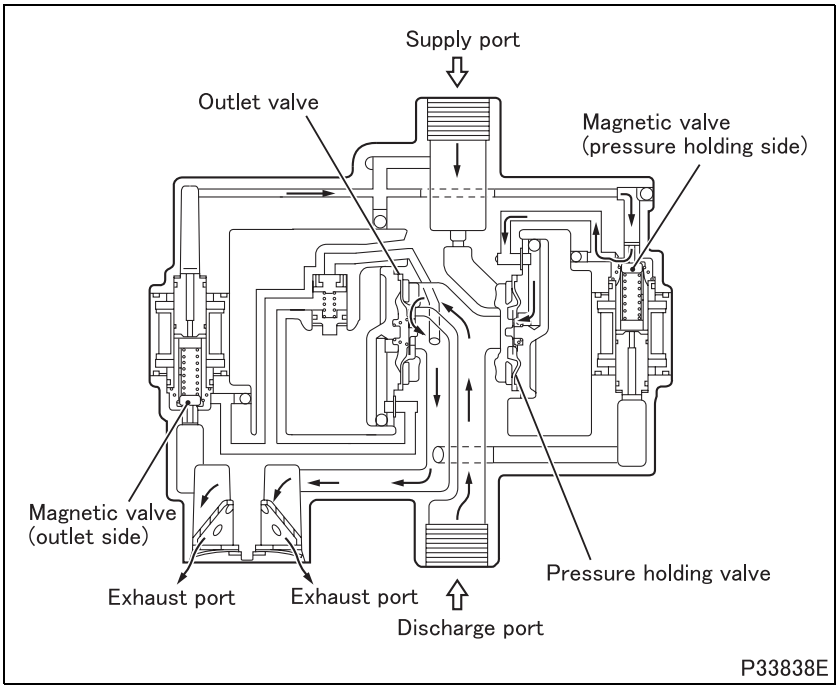

(2) When pressure decreased

- When braking is applied at t1 in the anti-lock brake control cycle above, the air pressure in the brake booster or brake chamber rises, the vehicle speed and wheel speed both begin to drop, and when the wheel show the lock-up tendency at t2, the control signal is sent from the electronic control unit to turn on the magnetic valve (holding valve) and magnetic valve (outlet valve).
- The pressure holding valve closes and the outlet valve opens. This discharges and decreases the air pressure in the brake chamber, and eases the lock-up tendency of the wheel. (t2 to t3)
  Supply port:
  from dual brake valve
  Discharge port:
  to brake chamber or brake booster
  Exhaust port:
  atmosphere

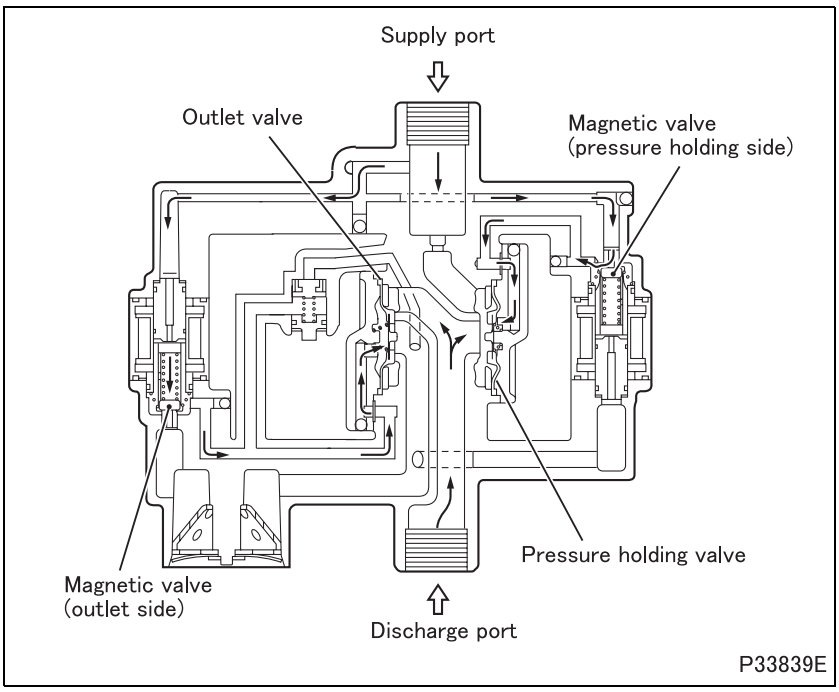

(3) When pressure held

- The magnetic valve (outlet valve) at t3 in the anti-lock brake system control cycle above turns off, the outlet valve closes, the air pressure in the brake booster or brake chamber is held, the slip ratio approaches λ=0, and the wheel speed accelerates.
- At t4, the magnetic valve (holding) repeats turning on and off until it reaches t5 and momentarily releases the pressure holding valve which causes the pressure to rise gradually. Then the wheel speed decelerates. This control cycle (from t2 to t5) repeats until the vehicle stops.
  Supply port:
  from dual brake valve
  Discharge port:
  to the brake chamber or brake booster

2. Electronic Control System

2.1 System block diagram

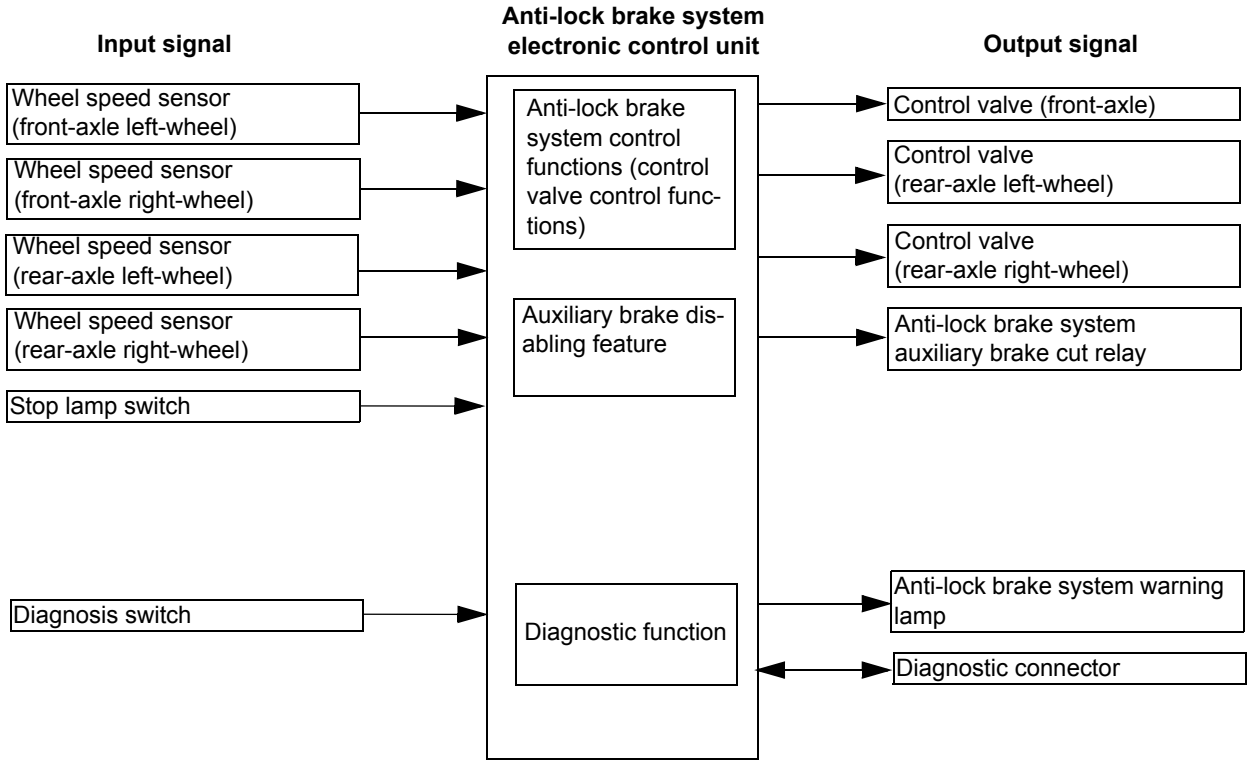

Part name	Primary function or operation
Wheel speed sensor	Detection of wheel speed
Stop lamp switch	Detection of brake pedal depression signal
Diagnosis switch	Indication of diagnosis codes
Control valve	Activation of anti-lock brake system
Anti-lock brake system auxiliary brake cut relay	Cut-off of exhaust brake in anti-lock braking mode
Anti-lock brake system warning lamp	Indication of anti-lock brake system faults
Diagnostic connector	Communication of system with Multi-Use Tester

2.2 Anti-lock brake system control functions (control functions of control valves)

- The anti-lock brake system uses wheel speed sensors and an electronic control unit to monitor the rolling status of the wheels. Whenever braking results in any wheels exceeding the specified deceleration or slip ratio, the electronic control unit determines that a lock-up of the wheels is imminent and activates the appropriate control valves to reduce the air pressure in the relevant brake chambers. As a result, the braking power is reduced to prevent the wheel lock-up. Subsequently, when the controlled wheels are restored to or below the specified deceleration or slip ratio, the relevant wheel speed sensors send control signals to the electronic control unit to the appropriate control valves. The air pressure to the relevant brake chambers is thereby increased to augment the braking power.
- This control cycle is repeated to prevent the wheel lock-up and make stable braking possible on slippery roads. The control valves for the front-axle and rear-axle left and right wheels are controlled independently of each other.

2.3 Auxiliary brake disabling feature

- The auxiliary brake alone can cause a wheel lock-up on slippery roads. Therefore, if the auxiliary brake is activated when the anti-lock brake system is in operation, it can compromise the effect of brake control by the system.
- To avoid this, during the anti-lock braking mode, the auxiliary brake is disabled even when the auxiliary brake switch is turned ON.
- The auxiliary brake is reactivated on deactivation of the anti-lock brake system if the auxiliary brake switch is ON.

2.4 Diagnostic functions

- When the starter switch is in the ON position, the system constantly monitors the operating condition of the sensors and other system components. If any fault is detected, the system displays the relevant information on the meter cluster to warn the driver of the fault status. At the same time, the system stores the relevant diagnosis code in the memory and starts operation in the fault-affected control mode.
- During the fault-affected control mode operation, the system functions are limited to ensure safety for the driver and the vehicle. Stored diagnosis codes can be accessed using Multi-Use Tester or through the warning lamp that blinks.
- Diagnosis codes are different between the Multi-Use Tester and warning lamp indication.
- The Multi-Use Tester provides more specific fault information.
- Even when the system has no fault, if any wheel speed sensor-related diagnosis code is issued during previous driving remains in the memory, the anti-lock brake system warning lamp continues to light until the vehicle speed reaches approximately 10 km/h {6.21 mph}.

3. Electronic Control Unit Schematic Diagram

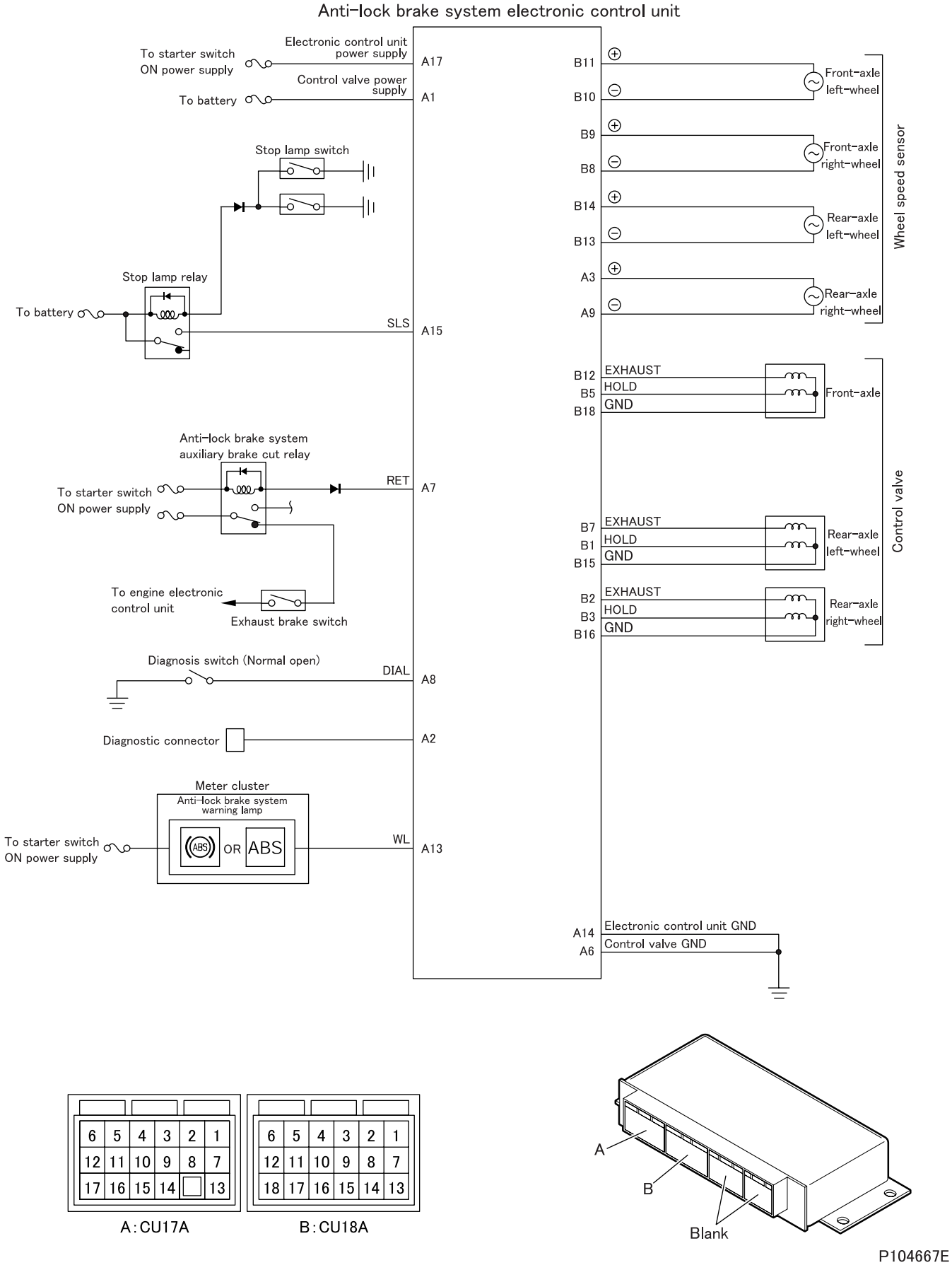

P104667E

M E M O

TROUBLESHOOTING

1. Diagnosis Procedure

- The system should be inspected in accordance with the following flowchart.
  System inspection can be accomplished basically in two ways according to trouble symptom and diagnosis code as shown below.
  - Check against each diagnosis code stored in memory by the electronic control unit
  - Response to transient fault

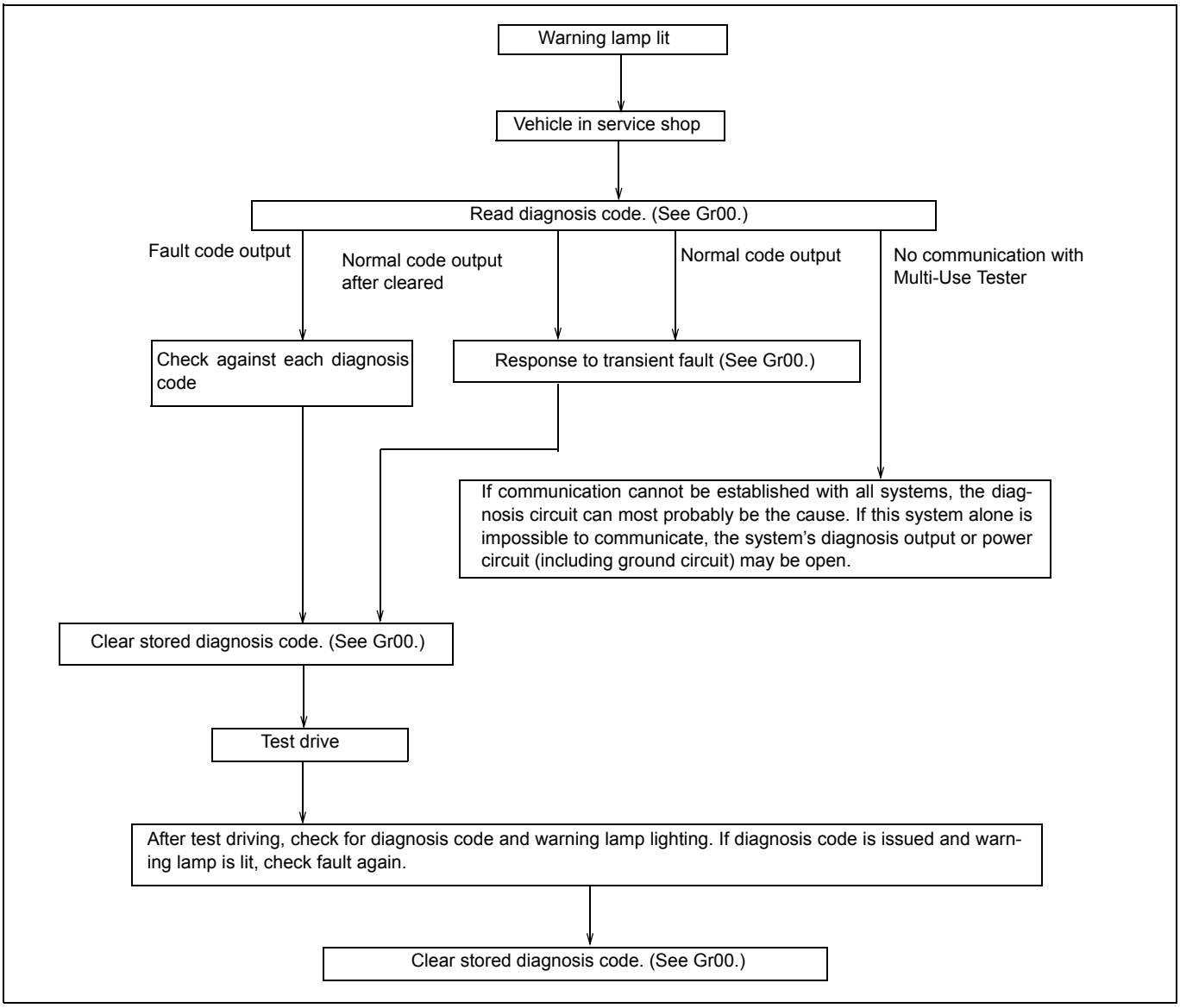

2. Diagnostic Precautions

- Before measuring voltage, check the battery for charged condition and specific gravity. If system inspection is performed with the battery uncharged or reduced in specific gravity, accurate measurements cannot be achieved.
- To avoid having electrical parts damaged, set the starter switch and lighting switch to LOCK or OFF before disconnecting and reconnecting battery cables.
- Before disconnecting connectors, set the starter switch to LOCK or OFF, then allow at least 20 seconds. Voltage may remain in electric parts or connected circuit.
- When performing measurement with the tester, handle the test bar carefully so that it does not damage internal circuit and other electrical parts of the electronic control unit to result in a short-circuit failure between terminals in connector or between connector and car body.
- Resistance is affected by temperature. Determine the necessity of resistance measurement following given temperature specification as a guide. Otherwise, use normal temperature (10 to 35°C {50 to 95°F}) as the measuring condition.

3. Inspection Based on Diagnosis Codes

3.1 List of diagnosis codes

- Diagnosis codes are different in the way of indication between the Multi-Use Tester and flashing warning lamp.
- Diagnosis codes on the Multi-Use Tester provide more specific information.

Code	Message	Warning lamp	Warning
–	No Failure	1-1	–
10	ECU Internal	15-1	O
11	ECU Internal	15-2	O
12	ECU Internal	15-7	O
13	ECU Internal	15-5	O
14	ECU Internal	15-6	O
15	ECU Internal	15-8	O
16	Invalid Config in EEPROM	15-9	O
17	ECU Internal (ROM DATA)	15-3	O
18	ECU Internal (RAM)	15-4	O
1A	ECU Internal Relay	15-10	O
1B	ECU Internal Relay	15-11	O
20	V-IGN Over Voltage	16-9	O
21	V-IGN LO Voltage	16-10	O
22	V-IGN LO Voltage during ABS Ctrl	16-10	O
23	V-BAT Over Voltage	16-1	O
24	V-BAT LO Voltage	16-2	O
25	V-BAT LO Voltage during ABS Ctrl	16-2	O
26	V-BAT Broken Wire	16-3	O
29	Valve Gnd Short HI	10-10	O
2A	Valve Short LO or ECU Internal	10-11	O
30	Ret Relay Short HI	17-1	O
31	Ret Relay Short or Broken Wire	17-2	O
41	FL WSS Short or Broken Wire	2-6	O
45	FL WSS Bad Tooth Wheel	2-3	O
47	FL WSS Large Air Gap	2-1	O
48	FL WSS Drive Off	2-2	O
49	FL WSS Long Term Instability	2-4	O
4A	FL WSS Loss of Sensor Signal	2-5	O
54	Fr Valve Gnd Broken Wire	8-4	O
55	Fr Outlet Valve Broken Wire	8-3	O
56	Fr Outlet Valve Short LO	8-2	O
57	Fr Outlet Valve Short HI	8-1	O
5D	Fr Valve Config Error	8-8	O
61	RR WSS Short or Broken Wire	5-6	O
65	RR WSS Bad Tooth Wheel	5-3	O
67	RR WSS Large Air Gap	5-1	O
68	RR WSS Drive Off	5-2	O
69	RR WSS Long Term Instability	5-4	O
6A	RR WSS Loss of Sensor Signal	5-5	O
71	RR Inlet Valve Broken Wire	11-7	O
72	RR Inlet Valve Short LO	11-6	O
73	RR Inlet Valve Short HI	11-5	O
74	RR Valve Gnd Broken Wire	11-4	O
75	RR Outlet Valve Broken Wire	11-3	O
76	RR Outlet Valve Short LO	11-2	O
77	RR Outlet Valve Short HI	11-1	O
7D	RR Valve Config Error	11-8	O
81	FR WSS Short or Broken Wire	3-6	O
85	FR WSS Bad Tooth Wheel	3-3	O
87	FR WSS Large Air Gap	3-1	O
88	FR WSS Drive Off	3-2	O
89	FR WSS Long Term Instability	3-4	O
8A	FR WSS Loss of Sensor Signal	3-5	O
91	Fr Inlet Valve Broken Wire	9-7	O
92	Fr Inlet Valve Short LO	9-6	O
93	Fr Inlet Valve Short HI	9-5	O
9D	FR Valve Config Error	9-8	O
A1	RL WSS Short or Broken Wire	4-6	O
A5	RL WSS Bad Tooth Wheel	4-3	O
A7	RL WSS Large Air Gap	4-1	O
A8	RL WSS Drive Off	4-2	O
A9	RL WSS Long Term Instability	4-4	O
AA	RL WSS Loss of Sensor Signal	4-5	O
B1	RL Inlet Valve Broken Wire	10-7	O
B2	RL Inlet Valve Short LO	10-6	O
B3	RL Inlet Valve Short HI	10-5	O
B4	RL Valve Gnd Broken Wire	10-4	O
B5	RL Outlet Valve Broken Wire	10-3	O
B6	RL Outlet Valve Short LO	10-2	O
B7	RL Outlet Valve Short HI	10-1	O
BD	RL Valve Config Error	10-8	O
D0	WSS Failure in Pre Pow on Cycle	17-12	O
D1	GND-ECU Broken Wire or Short LO	17-10	O
D2	Tire Size Error, Front to Rear	17-5	O
D4	WSS Mixed Up	17-13	O

3.2 Diagnosis Code Generation Conditions and Inspection Items

10: ECU Internal (Warning Lamp: 15-1)

Code generation condition		Electronic control unit is internally faulty.
Resettability		System resets if normal signal is received with starter switch set OFF → ON (electronic control unit reactivated).
Electronic control unit control		Anti-lock brake system disabled
Inspection item	Other	If system does not reset despite repeated ON-OFF of starter switch, replace electronic control unit.

11: ECU Internal (Warning Lamp: 15-2)

Code generation condition		Electronic control unit is internally faulty.
Resettability		System resets if normal signal is received with starter switch set OFF → ON (electronic control unit reactivated).
Electronic control unit control		Anti-lock brake system disabled
Inspection item	Other	If system does not reset despite repeated ON-OFF of starter switch, replace electronic control unit.

12: ECU Internal (Warning Lamp: 15-7)

Code generation condition		Electronic control unit is internally faulty.
Resettability		System resets if normal signal is received with starter switch set OFF → ON (electronic control unit reactivated).
Electronic control unit control		Anti-lock brake system disabled
Inspection item	Other	If system does not reset despite repeated ON-OFF of starter switch, replace electronic control unit.

13: ECU Internal (Warning Lamp: 15-5)

Code generation condition		Electronic control unit is internally faulty.
Resettability		System resets if normal signal is received with starter switch set OFF → ON (electronic control unit reactivated).
Electronic control unit control		Anti-lock brake system disabled
Inspection item	Other	If system does not reset despite repeated ON-OFF of starter switch, replace electronic control unit.

14: ECU Internal (Warning Lamp: 15-6)

Code generation condition		Electronic control unit is internally faulty.
Resettability		System resets if normal signal is received with starter switch set OFF → ON (electronic control unit reactivated).
Electronic control unit control		Anti-lock brake system disabled
Inspection item	Other	If system does not reset despite repeated ON-OFF of starter switch, replace electronic control unit.

15: ECU Internal (Warning Lamp: 15-8)

Code generation condition		Electronic control unit is internally faulty.
Resettability		System resets if normal signal is received with starter switch set OFF → ON (electronic control unit reactivated).
Electronic control unit control		Anti-lock brake system disabled
Inspection item	Other	If system does not reset despite repeated ON-OFF of starter switch, replace electronic control unit.

16: Invalid Config in EEPROM (Warning Lamp: 15-9)

Code generation condition		Electronic control unit is internally faulty.
Resettability		System resets if normal signal is received with starter switch set OFF → ON (electronic control unit reactivated).
Electronic control unit control		Anti-lock brake system disabled
Inspection item	Other	If system does not reset despite repeated ON-OFF of starter switch, replace electronic control unit.

17: ECU Internal (ROM DATA) (Warning Lamp: 15-3)

Code generation condition		Electronic control unit is internally faulty.
Resettability		System resets if normal signal is received with starter switch set OFF → ON (electronic control unit reactivated).
Electronic control unit control		Anti-lock brake system disabled
Inspection item	Other	If system does not reset despite repeated ON-OFF of starter switch, replace electronic control unit.

18: ECU Internal (RAM) (Warning Lamp: 15-4)

Code generation condition		Electronic control unit is internally faulty.
Resettability		System resets if normal signal is received with starter switch set OFF → ON (electronic control unit reactivated).
Electronic control unit control		Anti-lock brake system disabled
Inspection item	Other	If system does not reset despite repeated ON-OFF of starter switch, replace electronic control unit.

1A: ECU Internal Relay (Warning Lamp: 15-10)

Code generation condition		Power relay in electronic control unit is faulty.
Resettability		System resets if normal signal is received with starter switch set OFF → ON (electronic control unit reactivated).
Electronic control unit control		Anti-lock brake system disabled
Inspection item	Other	If system does not reset despite repeated ON-OFF of starter switch, replace electronic control unit.

1B: ECU Internal Relay (Warning Lamp: 15-11)

Code generation condition		Power relay in electronic control unit is faulty.
Resettability		System resets if normal signal is received with starter switch set OFF → ON (electronic control unit reactivated).
Electronic control unit control		Normal control
Inspection item	Other	If system does not reset despite repeated ON-OFF of starter switch, replace electronic control unit.

20: V-IGN Over Voltage (Warning Lamp: 16-9)

Code generation condition		Electronic control unit power voltage is excessive (over 17.5V).
Resettability		System resets if normal signal is received with starter switch in ON position.
Electronic control unit control		Anti-lock brake system disabled
Inspection item	Service data	13: Voltage U-ign
	Electronic control unit connector	01: Power voltage for electronic control unit
	Wiring diagram	Starter switch ON power circuit

21: V-IGN LO Voltage (Warning Lamp: 16-10)

Code generation condition		Electronic control unit power voltage is too low (below 9V).
Resettability		System resets if normal signal is received with starter switch in ON position.
Electronic control unit control		Anti-lock brake system disabled
Inspection item	Service data	13: Voltage U-ign
	Electronic control unit connector	01: Power voltage for electronic control unit
	Wiring diagram	Starter switch ON power circuit

22: V-IGN LO Voltage during ABS Ctrl (Warning Lamp: 16-10)

Code generation condition		Electronic control unit power voltage drops (below 8V) when anti-lock brake system is in operation.
Resettability		System resets if normal signal is received with starter switch set OFF → ON (electronic control unit reactivated).
Electronic control unit control		Anti-lock brake system disabled
Inspection item	Service data	13: Voltage U-ign
	Electronic control unit connector	01: Power voltage for electronic control unit
	Wiring diagram	Starter switch ON power circuit

23: V-BAT Over Voltage (Warning Lamp: 16-1)

Code generation condition		Control valve power voltage is excessive (over 17.5V).
Resettability		System resets if normal signal is received with starter switch in ON position.
Electronic control unit control		Anti-lock brake system disabled
Inspection item	Service data	14: Voltage U-bat
	Electronic control unit connector	01: Power voltage for electronic control unit
	Wiring diagram	Battery circuit

24: V-BAT LO Voltage (Warning Lamp: 16-2)

Code generation condition		Control valve power voltage drops (below 9V).
Resettability		System resets if normal signal is received with starter switch in ON position.
Electronic control unit control		Anti-lock brake system disabled
Inspection item	Service data	14: Voltage U-bat
	Electronic control unit connector	01: Power voltage for electronic control unit
	Wiring diagram	Battery circuit

25: V-BAT LO Voltage during ABS Ctrl (Warning Lamp: 16-2)

Code generation condition		Control valve power voltage drops (below 8V) when anti-lock brake system is working.
Resettability		System resets if normal signal is received with starter switch set OFF → ON (electronic control unit reactivated).
Electronic control unit control		Anti-lock brake system disabled
Inspection item	Service data	14: Voltage U-bat
	Electronic control unit connector	01: Power voltage for electronic control unit
	Wiring diagram	Battery circuit

26: V-BAT Broken Wire (Warning Lamp: 16-3)

Code generation condition		Control valve power supply is open-circuited.
Resettability		System resets if normal signal is received with starter switch set OFF → ON (electronic control unit reactivated).
Electronic control unit control		Anti-lock brake system disabled
Inspection item	Service data	14: Voltage U-bat
	Electronic control unit connector	01: Power voltage for electronic control unit
	Wiring diagram	Battery circuit

29: Valve Gnd Short HI (Warning Lamp: 10-10)

Code generation condition		Control valve ground circuit is shorted to + side.
Resettability		System resets if normal signal is received with starter switch set OFF → ON (electronic control unit reactivated).
Electronic control unit control		Anti-lock brake system disabled
Inspection item	Wiring diagram	Control valve ground circuit

2A: Valve Short LO or ECU Internal (Warning Lamp: 10-11)

Code generation condition		Control valve power source or control valve ground circuit is shorted to – side or electronic control unit is internally faulty.
Resettability		System resets if normal signal is received with starter switch set OFF → ON (electronic control unit reactivated).
Electronic control unit control		Anti-lock brake system disabled
Inspection item	Wiring diagram	Control valve power source or control valve ground circuit

30: Ret Relay Short HI (Warning Lamp: 17-1)

Code generation condition		"Anti-lock brake system auxiliary brake cut relay short-circuited to + side" is detected when anti-lock brake system is working.
Resettability		System resets if normal signal is received with starter switch set OFF → ON (electronic control unit reactivated).
Electronic control unit control		Auxiliary brake disabling control disabled
Inspection item	Actuator test	03: Retarder relay
	Electronic control unit connector	02: Anti-lock brake system auxiliary brake cut relay
	Electrical part	#180: Anti-lock brake system auxiliary brake cut relay
	Wiring diagram	Anti-lock brake system auxiliary brake cut relay circuit

31: Ret Relay Short or Broken Wire (Warning Lamp: 17-2)

Code generation condition		"Anti-lock brake system auxiliary brake cut relay short-circuited to – side or open-circuited" is detected when anti-lock brake system is not working.
Resettability		System resets if normal signal is received with starter switch set OFF → ON (electronic control unit reactivated).
Electronic control unit control		Auxiliary brake disabling control disabled
Inspection item	Actuator test	03: Retarder relay
	Electronic control unit connector	02: Anti-lock brake system auxiliary brake cut relay
	Electrical part	#180: Anti-lock brake system auxiliary brake cut relay
	Wiring diagram	Anti-lock brake system auxiliary brake cut relay circuit

41: FL WSS Short or Broken Wire (Warning Lamp: 2-6)

Code generation condition		"Wheel speed sensor (front-axle, left-wheel) open-circuited or short-circuited" is detected.
Resettability		System resets if normal signal is received with starter switch set OFF → ON and vehicle runs at a speed over 10km/h (electronic control unit reactivated).
Electronic control unit control		Anti-lock brake system of front-axle left wheel disabled.
Inspection item	Service data	01: Wheel speed FL
	Electronic control unit connector	03: Wheel speed sensor
	Electrical part	#329: Wheel speed sensor
	Wiring diagram	Wheel speed sensor (front-axle left-wheel) circuit
	Other	Rotor and wheel hub bearing (See Gr26.)

45: FL WSS Bad Tooth Wheel (Warning Lamp: 2-3)

Code generation condition		"Rotor tooth missing" is determined from wheel speed sensor (front-axle, left-wheel) signal when vehicle is running.
Resettability		System resets if normal signal is received with starter switch set OFF → ON and vehicle runs at a speed over 10km/h (electronic control unit reactivated).
Electronic control unit control		Anti-lock brake system of front-axle left wheel disabled
Inspection item	Service data	01: Wheel speed FL
	Electronic control unit connector	03: Wheel speed sensor
	Electrical part	#329: Wheel speed sensor
	Wiring diagram	Wheel speed sensor (front-axle left-wheel) circuit
	Other	Rotor and wheel hub bearing (See Gr26.)

47: FL WSS Large Air Gap (Warning Lamp: 2-1)

Code generation condition		"Air gap (vehicle speed signal input start command) exceeding specified limit" is determined from wheel speed sensor (front-axle left-wheel) signal when vehicle is started.
Resettability		System resets if normal signal is received with starter switch set OFF → ON and vehicle runs at a speed over 10km/h (electronic control unit reactivated).
Electronic control unit control		Anti-lock brake system of front-axle left wheel disabled
Inspection item	Service data	01: Wheel speed FL
	Electronic control unit connector	03: Wheel speed sensor
	Electrical part	#329: Wheel speed sensor
	Wiring diagram	Wheel speed sensor (front-axle left-wheel) circuit
	Other	Rotor and wheel hub bearing (See Gr26.)

48: FL WSS Drive Off (Warning lamp: 2-2)

Code generation condition		"No wheel speed sensor (front-axle, left-wheel) output" continues for specified time even after vehicle is started.
Resettability		System resets if normal signal is received with starter switch set OFF → ON and vehicle runs at a speed over 10km/h (electronic control unit reactivated).
Electronic control unit control		Anti-lock brake system of front-axle left wheel disabled
Inspection item	Service data	01: Wheel speed FL
	Electronic control unit connector	03: Wheel speed sensor
	Electrical part	#329: Wheel speed sensor
	Wiring diagram	Wheel speed sensor (front-axle left-wheel) circuit
	Other	Rotor and wheel hub bearing (See Gr26.)

49: FL WSS Long Term Instability (Warning lamp: 2-4)

Code generation condition		"Wheel speed sensor (front-axle, left-wheel) output unstable" continues for specified time when vehicle is running.
Resettability		System resets if normal signal is received with starter switch set OFF → ON and vehicle runs at a speed over 10km/h (electronic control unit reactivated).
Electronic control unit control		Anti-lock brake system of front-axle left wheel disabled
Inspection item	Service data	01: Wheel speed FL
	Electronic control unit connector	03: Wheel speed sensor
	Electrical part	#329: Wheel speed sensor
	Wiring diagram	Wheel speed sensor (front-axle left-wheel) circuit
	Other	Rotor and wheel hub bearing (See Gr26.)

4A: FL WSS Loss of Sensor Signal (Warning lamp: 2-5)

Code generation condition		Abnormal deceleration is determined from wheel speed sensor (front-axle, left-wheel) signal when vehicle is running.
Resettability		System resets if normal signal is received with starter switch set OFF → ON and vehicle runs at a speed over 10km/h (electronic control unit reactivated).
Electronic control unit control		Anti-lock brake system of front-axle left wheel disabled
Inspection item	Service data	01: Wheel speed FL
	Electronic control unit connector	03: Wheel speed sensor
	Electrical part	#329: Wheel speed sensor
	Wiring diagram	Wheel speed sensor (front-axle, left-wheel) circuit
	Other	Rotor and wheel hub bearing (See Gr26.)

54: Fr Valve Gnd Broken Wire (Warning lamp: 8-4)

Code generation condition		"Control valve (front-wheel; ground side) or (front-wheel; pressure holding/outlet side) open-circuited" is detected.
Resettability		System resets if normal signal is received with starter switch set OFF → ON (electronic control unit reactivated).
Electronic control unit control		Anti-lock brake control limited to front-axle left wheel
Inspection item	Actuator test	04: Outlet Valve Fr 07: Inlet Valve Fr
	Electronic control unit connector	04: Control valve
	Electrical part	#589: Control valve
	Wiring diagram	Control valve (front-wheel) circuit

55: Fr Outlet Valve Broken Wire (Warning lamp: 8-3)

Code generation condition		"Control valve (front-wheel; outlet side) open-circuited" is detected.
Resettability		System resets if normal signal is received with starter switch set OFF → ON (electronic control unit reactivated).
Electronic control unit control		Anti-lock brake control limited to front-axle left wheel
Inspection item	Actuator test	04: Outlet Valve Fr
	Electronic control unit connector	04: Control valve
	Electrical part	#589: Control valve
	Wiring diagram	Control valve (front-wheel; outlet side) circuit

56: Fr Outlet Valve Short LO (Warning lamp: 8-2)

Code generation condition		"Control valve (front-wheel; outlet side) short-circuited to **–** side" is detected.
Resettability		System resets if normal signal is received with starter switch set OFF → ON (electronic control unit reactivated).
Electronic control unit control		Anti-lock brake control limited to front-axle left wheel
Inspection item	Actuator test	04: Outlet Valve Fr
	Electronic control unit connector	04: Control valve
	Electrical part	#589: Control valve
	Wiring diagram	Control valve (front-wheel; outlet side) circuit

57: Fr Outlet Valve Short HI (Warning lamp: 8-1)

Code generation condition		"Control valve (front-wheel; outlet side) short-circuited to + side" is detected.
Resettability		System resets if normal signal is received with starter switch set OFF → ON (electronic control unit reactivated).
Electronic control unit control		Anti-lock brake system totally disabled
Inspection item	Actuator test	04: Outlet Valve Fr
	Electronic control unit connector	04: Control valve
	Electrical part	#589: Control valve
	Wiring diagram	Control valve (front-wheel; outlet side) circuit

5D: Fr Valve Config Error (Warning lamp: 8-8)

Code generation condition		Electronic control unit error in recognition of appropriate control valve
Resettability		System resets if normal signal is received with starter switch set OFF → ON (electronic control unit reactivated).
Electronic control unit control		None
Inspection item	Other	Check to see if control valve is correctly connected.

61: RR WSS Short or Broken Wire (Warning lamp: 5-6)

Code generation condition		"Wheel speed sensor (rear-axle right-wheel) open-circuited or short-circuited" is detected.
Resettability		System resets if normal signal is received with starter switch set OFF → ON and vehicle runs at a speed over 10km/h (electronic control unit reactivated).
Electronic control unit control		Anti-lock brake system of rear-axle right wheel disabled
Inspection item	Service data	04: Wheel speed RR
	Electronic control unit connector	03: Wheel speed sensor
	Electrical part	#329: Wheel speed sensor
	Wiring diagram	Wheel speed sensor (rear-axle right-wheel) circuit
	Other	Rotor and wheel hub bearing (See Gr27.)

65: RR WSS Bad Tooth Wheel (Warning lamp: 5-3)

Code generation condition		"Rotor tooth missing" status is determined from wheel speed sensor (rear-axle right-wheel) signal when vehicle is running.
Resettability		System resets if normal signal is received with starter switch set OFF → ON and vehicle runs at a speed over 10km/h (electronic control unit reactivated).
Electronic control unit control		Anti-lock brake system of rear-axle right wheel disabled
Inspection item	Service data	04: Wheel speed RR
	Electronic control unit connector	03: Wheel speed sensor
	Electrical part	#329: Wheel speed sensor
	Wiring diagram	Wheel speed sensor (rear-axle right-wheel) circuit
	Other	Rotor and wheel hub bearing (See Gr27.)

67: RR WSS Large Air Gap (Warning lamp: 5-1)

Code generation condition		"Air gap (vehicle speed signal input start speed) exceeding specified limit" status is determined from wheel speed sensor (rear-axle right-wheel) signal when vehicle is started.
Resettability		System resets if normal signal is received with starter switch set OFF → ON and vehicle runs at a speed over 10km/h (electronic control unit reactivated).
Electronic control unit control		Anti-lock brake system of rear-axle right wheel disabled
Inspection item	Service data	04: Wheel speed RR
	Electronic control unit connector	03: Wheel speed sensor
	Electrical part	#329: Wheel speed sensor
	Wiring diagram	Wheel speed sensor (rear-axle right-wheel) circuit
	Other	Rotor and wheel hub bearing (See Gr27.)

68: RR WSS Drive Off (Warning lamp: 5-2)

Code generation condition		"No wheel speed signal (rear-axle right-wheel) input" continues for specified time after vehicle is started.
Resettability		System resets if normal signal is received with starter switch set OFF → ON and vehicle runs at a speed over 10km/h (electronic control unit reactivated).
Electronic control unit control		Anti-lock brake system of rear-axle right wheel disabled
Inspection item	Service data	04: Wheel speed RR
	Electronic control unit connector	03: Wheel speed sensor
	Electrical part	#329: Wheel speed sensor
	Wiring diagram	Wheel speed sensor (rear-axle right-wheel) circuit
	Other	Rotor and wheel hub bearing (See Gr27.)

69: RR WSS Long Term Instability (Warning lamp: 5-4)

Code generation condition		"Wheel speed signal (rear-axle right-wheel) unstable" continues for specified time when vehicle is running.
Resettability		System resets if normal signal is received with starter switch set OFF → ON and vehicle runs at a speed over 10km/h (electronic control unit reactivated).
Electronic control unit control		Anti-lock brake system of rear-axle right wheel disabled
Inspection item	Service data	04: Wheel speed RR
	Electronic control unit connector	03: Wheel speed sensor
	Electrical part	#329: Wheel speed sensor
	Wiring diagram	Wheel speed sensor (rear-axle right-wheel) circuit
	Other	Rotor and wheel hub bearing (See Gr27.)

6A: RR WSS Loss of Sensor Signal (Warning lamp: 5-5)

Code generation condition		Abnormal deceleration is determined from wheel speed sensor (rear-axle right-wheel) signal when vehicle is running.
Resettability		System resets if normal signal is received with starter switch set OFF → ON and vehicle runs at a speed over 10km/h (electronic control unit reactivated).
Electronic control unit control		Anti-lock brake system of rear-axle right wheel disabled
Inspection item	Service data	04: Wheel speed RR
	Electronic control unit connector	03: Wheel speed sensor
	Electrical part	#329: Wheel speed sensor
	Wiring diagram	Wheel speed sensor (rear-axle right-wheel) circuit
	Other	Rotor and wheel hub bearing (See Gr27.)

71: RR Inlet Valve Broken Wire (Warning lamp: 11-7)

Code generation condition		"Control valve (rear-axle right-wheel; pressure holding side) open-circuited" is detected.
Resettability		System resets if normal signal is received with starter switch set OFF → ON and vehicle runs at a speed over 10km/h (electronic control unit reactivated).
Electronic control unit control		Anti-lock brake control limited to rear-axle right wheel
Inspection item	Actuator test	11: Inlet Valve RR
	Electronic control unit connector	04: Control valve
	Electrical part	#589: Control valve
	Wiring diagram	Control valve (rear-axle right-wheel; pressure holding side) circuit

72: RR Inlet Valve Short LO (Warning lamp: 11-6)

Code generation condition		"Control valve (rear-axle right-wheel; pressure holding side) short-circuited to – side" is detected.
Resettability		System resets if normal signal is received with starter switch set OFF → ON and vehicle runs at a speed over 10km/h (electronic control unit reactivated).
Electronic control unit control		Anti-lock brake control limited to rear-axle right wheel
Inspection item	Actuator test	11: Inlet Valve RR
	Electronic control unit connector	04: Control valve
	Electrical part	#589: Control valve
	Wiring diagram	Control valve (rear-axle right-wheel; pressure holding side) circuit

73: RR Inlet Valve Short HI (Warning lamp: 11-5)

Code generation condition		"Control valve (rear-axle right-wheel; pressure holding side) short-circuited to + side" is detected.
Resettability		System resets if normal signal is received with starter switch set OFF → ON and vehicle runs at a speed over 10km/h (electronic control unit reactivated).
Electronic control unit control		Anti-lock brake system totally disabled
Inspection item	Actuator test	11: Inlet Valve RR
	Electronic control unit connector	04: Control valve
	Electrical part	#589: Control valve
	Wiring diagram	Control valve (rear-axle right-wheel; pressure holding side) circuit

74: RR Valve Gnd Broken Wire (Warning lamp: 11-4)

Code generation condition		"Control valve (rear-axle right-wheel; ground side) or (rear-axle right-wheel; pressure holding/outlet side) open-circuited" is detected.
Resettability		System resets if normal signal is received with starter switch set OFF → ON and vehicle runs at a speed over 10km/h (electronic control unit reactivated).
Electronic control unit control		Anti-lock brake control limited to rear-axle right wheel
Inspection item	Actuator test	10: Outlet Valve RR 11: Inlet Valve RR
	Electronic control unit connector	04: Control valve
	Electrical part	#589: Control valve
	Wiring diagram	Control valve (right-axle right-wheel) circuit

75: RR Outlet Valve Broken Wire (Warning lamp: 11-3)

Code generation condition		"Control valve (rear-axle right-wheel; outlet side) open-circuited" is detected.
Resettability		System resets if normal signal is received with starter switch set OFF → ON (electronic control unit reactivated)
Electronic control unit control		Anti-lock brake control limited to rear-axle right wheel
Inspection item	Actuator test	10: Outlet Valve RR
	Electronic control unit connector	04: Control valve
	Electrical part	#589: Control valve
	Wiring diagram	Control valve (rear-axle right-wheel; outlet side) circuit

76: RR Outlet Valve Short LO (Warning lamp: 11-2)

Code generation condition		"Control valve (rear-axle right-wheel; outlet side) short-circuited to – side" is detected.
Resettability		System resets if normal signal is received with starter switch set OFF → ON (electronic control unit reactivated)
Electronic control unit control		Anti-lock brake control limited to rear-axle right wheel
Inspection item	Actuator test	10: Outlet Valve RR
	Electronic control unit connector	04: Control valve
	Electrical part	#589: Control valve
	Wiring diagram	Control valve (rear-axle right-wheel; outlet side) circuit

77: RR Outlet Valve Short HI (Warning lamp: 11-1)

Code generation condition		"Control valve (rear-axle right-wheel; outlet side) short-circuited to + side" is detected.
Resettability		System resets if normal signal is received with starter switch set OFF → ON (electronic control unit reactivated)
Electronic control unit control		Anti-lock brake system totally disabled
Inspection item	Actuator test	10: Outlet Valve RR
	Electronic control unit connector	04: Control valve
	Electrical part	#589: Control valve
	Wiring diagram	Control valve (rear-axle right-wheel; outlet side) circuit

7D: RR Valve Config Error (Warning lamp: 11-8)

Code generation condition		Electronic control unit error in recognition of appropriate control valve
Resettability		System resets if normal signal is received with starter switch set OFF → ON (electronic control unit reactivated)
Electronic control unit control		None
Inspection item	Other	Check to see if control valve is correctly connected.

81: FR WSS Short or Broken Wire (Warning lamp: 3-6)

Code generation condition		"Wheel speed sensor (rear-axle right-wheel) open circuited or short-circuited" is detected.
Resettability		System resets if normal signal is received with starter switch set OFF → ON and vehicle runs at a speed over 10km/h (electronic control unit reactivated)
Electronic control unit control		Anti-lock brake system of front-axle right wheel disabled
Inspection item	Service data	02: Wheel speed FR
	Electronic control unit connector	03: Wheel speed sensor
	Electrical part	#329: Wheel speed sensor
	Wiring diagram	Wheel speed sensor (front-axle right-wheel) circuit
	Other	Rotor and wheel hub bearing (See Gr26.)

85: FR WSS Bad Tooth Wheel (Warning lamp: 3-3)

Code generation condition		"Rotor tooth missing" is determined from wheel speed sensor (front-axle right-wheel) signal when vehicle is running.
Resettability		System resets if normal signal is received with starter switch set OFF → ON and vehicle runs at a speed over 10km/h (electronic control unit reactivated)
Electronic control unit control		Anti-lock brake system of front-axle right wheel disabled
Inspection item	Service data	02: Wheel speed FR
	Electronic control unit connector	03: Wheel speed sensor
	Electrical part	#329: Wheel speed sensor
	Wiring diagram	Wheel speed sensor (front-axle right-wheel) circuit
	Other	Rotor and wheel hub bearing (See Gr26.)

87: FR WSS Large Air Gap (Warning lamp: 3-1)

Code generation condition		"Air gap (vehicle speed signal input start signal) exceeding specified limit" is determined from vehicle speed sensor (front-axle right-wheel) signal when vehicle is running.
Resettability		System resets if normal signal is received with starter switch set OFF → ON and vehicle runs at a speed over 10km/h (electronic control unit reactivated)
Electronic control unit control		Anti-lock brake system of front-axle right wheel disabled
Inspection item	Service data	02: Wheel speed FR
	Electronic control unit connector	03: Wheel speed sensor
	Electrical part	#329: Wheel speed sensor
	Wiring diagram	Wheel speed sensor (front-axle right-wheel) circuit
	Other	Rotor and wheel hub bearing (See Gr26.)

88: FR WSS Drive Off (Warning lamp: 3-2)

Code generation condition		"No vehicle speed signal (front-axle right-wheel) input" continues for specified time.
Resettability		System resets if normal signal is received with starter switch set OFF → ON and vehicle runs at a speed over 10km/h (electronic control unit reactivated)
Electronic control unit control		Anti-lock brake system of front-axle right wheel disabled
Inspection item	Service data	02: Wheel speed FR
	Electronic control unit connector	03: Wheel speed sensor
	Electrical part	#329: Wheel speed sensor
	Wiring diagram	Wheel speed sensor (front-axle right-wheel) circuit
	Other	Rotor and wheel hub bearing (See Gr26.)

89: FR WSS Long Term Instability (Warning lamp: 3-4)

Code generation condition		"Wheel speed signal (front-axle right-wheel) unstable" continues for specified time when vehicle is running.
Resettability		System resets if normal signal is received with starter switch set OFF → ON and vehicle runs at a speed over 10km/h (electronic control unit reactivated)
Electronic control unit control		Anti-lock brake system of front-axle right wheel disabled
Inspection item	Service data	02: Wheel speed FR
	Electronic control unit connector	03: Wheel speed sensor
	Electrical part	#329: Wheel speed sensor
	Wiring diagram	Wheel speed sensor (front-axle right-wheel) circuit
	Other	Rotor and wheel hub bearing (See Gr26.)

8A: FR WSS Loss of Sensor Signal (Warning lamp: 3-5)

Code generation condition		Abnormal deceleration is determined from wheel speed sensor (front-axle right-wheel) when vehicle is running.
Resettability		System resets if normal signal is received with starter switch set OFF → ON and vehicle runs at a speed over 10km/h (electronic control unit reactivated).
Electronic control unit control		Anti-lock brake system of front-axle right wheel disabled
Inspection item	Service data	02: Wheel speed FR
	Electronic control unit connector	03: Wheel speed sensor
	Electrical part	#329: Wheel speed sensor
	Wiring diagram	Wheel speed sensor (front-axle right-wheel) circuit
	Other	Rotor and wheel hub bearing (See Gr26.)

91: Fr Inlet Valve Broken Wire (Warning lamp: 9-7)

Code generation condition		"Control valve (front-axle right-wheel) open-circuited" is detected.
Resettability		System resets if normal signal is received with starter switch set OFF → ON (electronic control unit reactivated).
Electronic control unit control		Anti-lock brake control limited to front-axle right wheel
Inspection item	Actuator test	07: Inlet Valve Fr
	Electronic control unit connector	04: Control valve
	Electrical part	#589: Control valve
	Wiring diagram	Control valve (front-axle right-wheel; pressure holding side) circuit

92: Fr Inlet Valve Short LO (Warning lamp: 9-6)

Code generation condition		"Control valve (front-axle right-wheel; pressure holding side) short-circuited to – side" is detected.
Resettability		System resets if normal signal is received with starter switch set OFF → ON (electronic control unit reactivated).
Electronic control unit control		Anti-lock brake control limited to front-axle right wheel
Inspection item	Actuator test	07: Inlet Valve Fr
	Electronic control unit connector	04: Control valve
	Electrical part	#589: Control valve
	Wiring diagram	Control valve (front-axle right-wheel; pressure holding side) circuit

93: Fr Inlet Valve Short HI (Warning lamp: 9-5)

Code generation condition		"Control valve (front-axle right-wheel; pressure holding side) short-circuited to + side" is detected.
Resettability		System resets if normal signal is received with starter switch set OFF → ON (electronic control unit reactivated).
Electronic control unit control		Anti-lock brake system totally disabled
Inspection item	Actuator test	07: Inlet Valve Fr
	Electronic control unit connector	04: Control valve
	Electrical part	#589: Control valve
	Wiring diagram	Control valve (front-axle right-wheel; pressure holding side) circuit

9D: FR Valve Config Error (Warning lamp: 9-8)

Code generation condition		Electronic control unit error in recognition of appropriate control valve
Resettability		System resets if normal signal is received with starter switch set OFF → ON (electronic control unit reactivated).
Electronic control unit control		None
Inspection item	Other	Check to see if control valve is correctly connected.

A1: RL WSS Short or Broken Wire (Warning lamp: 4-6)

Code generation condition		"Wheel speed sensor (rear-axle left-wheel) open-circuited or short-circuited" is detected.
Resettability		System resets if normal signal is received with starter switch set OFF → ON and vehicle run at a speed over 10 km/h (electronic control unit reactivated).
Electronic control unit control		Anti-lock brake system of rear-axle left wheel disabled
Inspection item	Service data	03: Wheel speed RL
	Electronic control unit connector	03: Wheel speed sensor
	Electrical part	#329: Wheel speed sensor
	Wiring diagram	Wheel speed sensor (rear-axle left-wheel) circuit
	Other	Rotor and wheel hub bearing (See Gr27.)

A5: RL WSS Bad Tooth Wheel (Warning lamp: 4-3)

Code generation condition		"Rotor tooth missing" is determined from wheel speed sensor (rear-axle left-wheel) when vehicle is running.
Resettability		System resets if normal signal is received with starter switch set OFF → ON and vehicle run at a speed over 10 km/h (electronic control unit reactivated).
Electronic control unit control		Anti-lock brake system of rear-axle left wheel disabled
Inspection item	Service data	03: Wheel speed RL
	Electronic control unit connector	03: Wheel speed sensor
	Electrical part	#329: Wheel speed sensor
	Wiring diagram	Wheel speed sensor (rear-axle left-wheel) circuit
	Other	Rotor and wheel hub bearing (See Gr27.)

A7: RL WSS Large Air Gap (Warning lamp: 4-1)

Code generation condition		"Air gap (vehicle signal input start signal) exceeding specified limit" is determined from wheel speed sensor (rear-axle left-wheel) signal.
Resettability		System resets if normal signal is received with starter switch set OFF → ON and vehicle runs at a speed over 10km/h (electronic control unit reactivated)
Electronic control unit control		Anti-lock brake system of rear-axle left wheel disabled
Inspection item	Service data	03: Wheel speed RL
	Electronic control unit connector	03: Wheel speed sensor
	Electrical part	#329: Wheel speed sensor
	Wiring diagram	Wheel seed sensor (rear-axle left-wheel) circuit
	Other	Rotor and wheel hub bearing (See Gr27.)

A8: RL WSS Drive Off (Warning lamp: 4-2)

Code generation condition		"No wheel speed signal (rear-axle left-wheel) input" continues for specified time after vehicle is started.
Resettability		System resets if normal signal is received with starter switch set OFF → ON and vehicle runs at a speed over 10km/h (electronic control unit reactivated)
Electronic control unit control		Anti-lock brake system of rear-axle left wheel disabled
Inspection item	Service data	03: Wheel speed RL
	Electronic control unit connector	03: Wheel speed sensor
	Electrical part	#329: Wheel speed sensor
	Wiring diagram	Wheel seed sensor (rear-axle left-wheel) circuit
	Other	Rotor and wheel hub bearing (See Gr27.)

A9: RL WSS Long Term Instability (Warning lamp: 4-4)

Code generation condition		"Wheel speed signal (rear-axle left-wheel) unstable" continues for specified time when vehicle is running.
Resettability		System resets if normal signal is received with starter switch set OFF → ON and vehicle runs at a speed over 10km/h (electronic control unit reactivated)
Electronic control unit control		Anti-lock brake system of rear-axle left wheel disabled
Inspection item	Service data	03: Wheel speed RL
	Electronic control unit connector	03: Wheel speed sensor
	Electrical part	#329: Wheel speed sensor
	Wiring diagram	Wheel seed sensor (rear-axle left-wheel) circuit
	Other	Rotor and wheel hub bearing (See Gr27.)

AA: RL WSS Loss of Sensor Signal (Warning lamp: 4-5)

Code generation condition		Abnormal deceleration is determined from wheel speed sensor (rear-axle left-wheel) signal.
Resettability		System resets if normal signal is received with starter switch set OFF → ON and vehicle runs at a speed over 10km/h (electronic control unit reactivated)
Electronic control unit control		Anti-lock brake system of rear-axle left wheel disabled
Inspection item	Service data	03: Wheel speed RL
	Electronic control unit connector	03: Wheel speed sensor
	Electrical part	#329: Wheel speed sensor
	Wiring diagram	Wheel seed sensor (rear-axle left-wheel) circuit
	Other	Rotor and wheel hub bearing (See Gr27.)

B1: RL Inlet Valve Broken Wire (Warning lamp: 10-7)

Code generation condition		"Control valve (rear-axle left-wheel; pressure holding side) open-circuited" is detected.
Resettability		System resets if normal signal is received with starter switch set OFF → ON (electronic control unit reactivated).
Electronic control unit control		Anti-lock brake control limited to rear-axle left wheel
Inspection item	Actuator test	09: Inlet Valve RL
	Electronic control unit connector	04: Control valve
	Electrical part	#589: Control valve
	Wiring diagram	Control valve (rear-axle left-wheel; pressure holding side) circuit

B2: RL Inlet Valve Short LO (Warning lamp: 10-6)

Code generation condition		"Control valve (rear-axle left-wheel; pressure holding side) short-circuited to – side" is detected.
Resettability		System resets if normal signal is received with starter switch set OFF → ON (electronic control unit reactivated).
Electronic control unit control		Anti-lock brake control limited to rear-axle left wheel
Inspection item	Actuator test	09: Inlet Valve RL
	Electronic control unit connector	04: Control valve
	Electrical part	#589: Control valve
	Wiring diagram	Control valve (rear-axle left-wheel; pressure holding side) circuit

B3: RL Inlet Valve Short HI (Warning lamp: 10-5)

Code generation condition		"Control valve (rear-axle left-wheel; pressure holding side) short-circuited to + side" is detected.
Resettability		System resets if normal signal is received with starter switch set OFF → ON (electronic control unit reactivated).
Electronic control unit control		Anti-lock brake system totally disabled
Inspection item	Actuator test	09: Inlet Valve RL
	Electronic control unit connector	04: Control valve
	Electrical part	#589: Control valve
	Wiring diagram	Control valve (rear-axle left-wheel; pressure holding side) circuit

B4: RL Valve Gnd Broken Wire (Warning lamp: 10-4)

Code generation condition		"Control valve (rear-axle left-wheel; ground side) or (rear-axle left-wheel; pressure holding/outlet side) open-circuited" is detected.
Resettability		System resets if normal signal is received with starter switch set OFF → ON (electronic control unit reactivated).
Electronic control unit control		Anti-lock brake control limited to rear-axle left wheel
Inspection item	Actuator test	08: Outlet Valve RL 09: Inlet Valve RL
	Electronic control unit connector	04: Control valve
	Electrical part	#589: Control valve
	Wiring diagram	Control valve (rear-axle left-wheel; pressure holding side) circuit

B5: RL Outlet Valve Broken Wire (Warning lamp: 10-3)

Code generation condition		"Control valve (rear-axle left-wheel; outlet side) open circuited" is detected.
Resettability		System resets if normal signal is received with starter switch set OFF → ON (electronic control unit reactivated).
Electronic control unit control		Anti-lock brake control limited to rear-axle left wheel
Inspection item	Actuator test	08: Outlet Valve RL
	Electronic control unit connector	04: Control valve
	Electrical part	#589: Control valve
	Wiring diagram	Control valve (rear-axle left-wheel; pressure holding side) circuit

B6: RL Outlet Valve Short LO (Warning lamp: 10-2)

Code generation condition		"Control valve (rear-axle left-wheel; outlet side) short-circuited to – side" is detected.
Resettability		System resets if normal signal is received with starter switch set OFF → ON (electronic control unit reactivated)
Electronic control unit control		Anti-lock brake control limited to rear-axle left wheel
Inspection item	Actuator test	08: Outlet Valve RL
	Electronic control unit connector	04: Control valve
	Electrical part	#589: Control valve
	Wiring diagram	Control valve (rear-axle left-wheel; outlet side) circuit

B7: RL Outlet Valve Short HI (Warning lamp: 10-1)

Code generation condition		"Control valve (rear-axle left-wheel; outlet side) short-circuited to + side" is detected.
Resettability		System resets if normal signal is received with starter switch set OFF → ON (electronic control unit reactivated)
Electronic control unit control		Anti-lock brake system totally disabled
Inspection item	Actuator test	08: Outlet Valve RL
	Electronic control unit connector	04: Control valve
	Electrical part	#589: Control valve
	Wiring diagram	Control valve (rear-axle left-wheel; outlet side) circuit

BD: RL Valve Config Error (Warning lamp: 10-8)

Code generation condition		Electronic control unit error in recognition of appropriate control valve
Resettability		System resets if normal signal is received with starter switch set OFF → ON (electronic control unit reactivated)
Electronic control unit control		None
Inspection item	Other	Check to see if control valve is correctly connected.

D0: WSS Failure in Pre Pow on Cycle (Warning lamp: 17-12)

Code generation condition		"Wheel speed sensor faulty last time starter switch set ON" is stored in memory.
Resettability		System resets if normal signal is received with starter switch in ON position.
Electronic control unit control		Anti-lock brake system disabled
Inspection item	Other	• Even if previous fault of sensor was remedied, display of the code D0 continues until vehicle is started. • Even if "Memory Clear" is executed, the code D0 is not deleted until normal signal at vehicle start is input.

D1: GND-ECU Broken Wire or Short LO (Warning lamp: 17-10)

Code generation condition		Electronic control unit ground circuit is open-circuited or shorted.
Resettability		System resets if normal signal is received with starter switch set OFF → ON (electronic control unit reactivated)
Electronic control unit control		Normal control
Inspection item	Wiring diagram	Electronic control unit ground circuit

D2: Tire Size Error, Front to Rear (Warning lamp: 17-5)

Code generation condition		Front and rear-wheel tires not of specified size (speed difference between wheels exceeds specified limit).
Resettability		System resets if normal signal is received with starter switch set OFF → ON (electronic control unit reactivated)
Electronic control unit control		Anti-lock brake system disabled
Inspection item	Service data	01: Wheel speed FL 02: Wheel speed FR 03: Wheel speed RL 04: Wheel speed RR
	Other	Inspection of tires (See Gr31.)

D4: WSS Mixed Up (Warning lamp: 17-13)

Code generation condition		Left- and right-wheel wheel speed sensors were installed at wrong positions.
Resettability		System resets if normal signal is received with starter switch set OFF → ON (electronic control unit reactivated)
Electronic control unit control		Anti-lock brake system disabled
Inspection item	Wiring diagram	Wheel speed sensor circuits

4. Multi-Use Tester Service Data

NOTE

- **Service data can be accessed while actuator test is being performed, and vice versa.**

No.	Item	Data	Diagnostic condition	Normal status
01	Wheel Speed FL	■■■. ■km/h	When vehicle running	Synchronized with speedometer
02	Wheel Speed FR	■■■. ■km/h		
03	Wheel Speed RL	■■■. ■km/h		
04	Wheel Speed RR	■■■. ■km/h		
07	Air Gap Speed FL	■■. ■■km/h	Vehicle run before diagnosis; stopped for diagnosis	14 km/h {8.7 mph} or less (14 km/h {8.7 mph} or more when wheel speed sensor abnormal)
08	Air Gap Speed FR	■■. ■■km/h		
09	Air Gap Speed RL	■■. ■■km/h		
10	Air Gap Speed RR	■■. ■■km/h		
13	Voltage U-ign	■■. ■■V	Starter switch ON	Equivalent to battery voltage
14	Voltage U-bat	■■. ■■V	Constantly	Equivalent to battery voltage
25	Stop Light Switch	ON/OFF	Brake pedal pressed	ON
			Brake pedal released	OFF
28	Diagnostic Switch	ON/OFF	Connector connected	ON
			Connector disconnected	OFF

5. Electronic Control Unit Information Display

Information	Display	Description
System Check Code	–	Anti-lock brake system electronic control unit check code displayed
Part Number	–	Anti-lock brake system electronic control unit part number displayed
Hardware Number	–	Anti-lock brake system electronic control unit hardware item number displayed
Serial Number	–	Anti-lock brake system electronic control unit serial number displayed
Manufacturer Date	–	Date of manufacture of anti-lock brake system electronic control unit displayed
Drive Axle Configuration	Not allowed/ 2s/1k (sidewise)/ 2s/1k (axlewise)/ 2s/2k	2s/2k
Steer Axle Configuration	Not allowed/ 2s/1k (axlewise)/ 2s/2k	2s/1k (axlewise)
Retarder Control via Relay	Operative/Inoperative	Operative
Retarder Control via CAN	Operative/Inoperative	Inoperative
ASR Brake Control	Operative/Inoperative	Inoperative
ASR Engine Control	Operative/Inoperative	Inoperative

6. Actuator Test Using Multi-Use Tester

- Service data can be accessed while actuator test being performed, and vice versa.

No.	Item	Description	Check method
01	Warning Lamp	Anti-lock brake system warning lamp ON signal 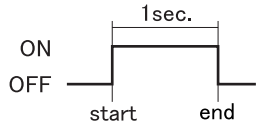 P64976E	Lamp lighting status
03	Retarder Relay	Anti-lock brake system auxiliary brake cut relay activation (ON) signal 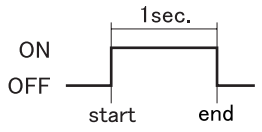 P64976E	Relay activation sound
04	Outlet Valve Fr	Control valve (front-axle left-wheel; outlet side) activation signal 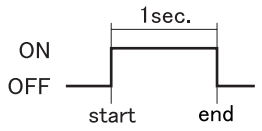 P64976E	• Perform actuator test with brake pedal pressed. • The valve is normal if the control valve emits an air discharge noise while the actuator is engaged (for 1 second).
07	Inlet Valve Fr	Control valve (front-axle right-wheel; pressure holding side) activation signal 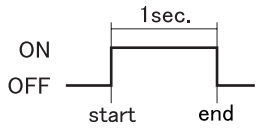 P64976E	• Perform actuator test. • The valve is normal if the brake cannot work when the brake pedal is pressed while the actuator is driving (for 1 second).
08	Outlet Valve RL	Control valve (rear-axle left-axle; outlet side) activation signal 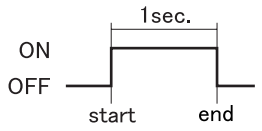 P64976E	• Perform actuator test with brake pedal pressed. • The valve is normal if the control valve emits an air discharge noise while the actuator is engaged (for 1 second).

No.	Item	Description	Check method
09	Inlet Valve RL	Control valve (rear-axle left-wheel; pressure holding side) activation signal 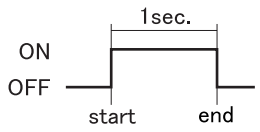 P64976E	• Perform actuator test with brake pedal pressed. • The valve is normal if the brake cannot work when the brake pedal is pressed while the actuator is driving (for 1 second).
10	Outlet Valve RR	Control valve (rear-axle right-wheel; outlet side) activation signal 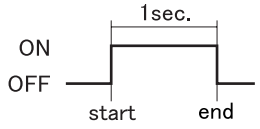 P64976E	• Perform actuator test with brake pedal pressed. • The valve is normal if the control valve emits an air discharge noise while the actuator is engaged (for 1 second).
11	Inlet Valve RR	Control valve (rear-axle right-wheel; pressure holding side) activation signal 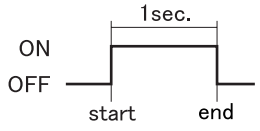 P64976E	• Perform actuator test with brake pedal pressed. • The valve is normal if the brake cannot work when the brake pedal is pressed while the actuator is driving (for 1 second).
21	Valve Test1 Fr	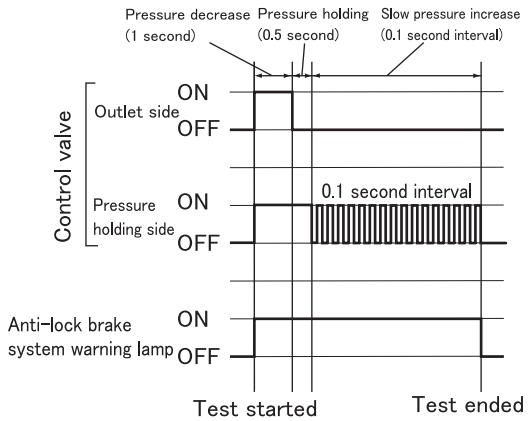 P64036E	Inspection control valves for function. (See On-Vehicle Inspection and Adjustment.)
23	Valve Test1 RL		
24	Valve Test1 RR		

No.	Item	Description	Check method
25	Valve Test2 Fr	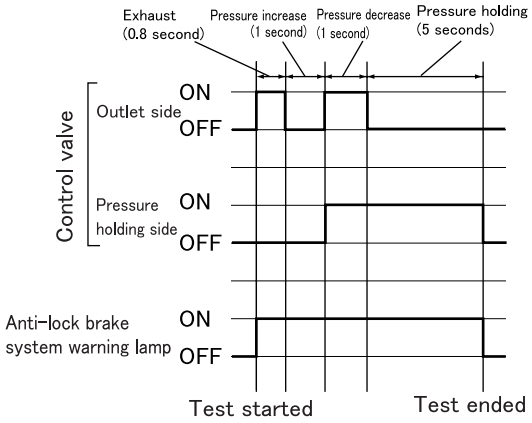 P64037E	Inspection control valves for function. (See On-Vehicle Inspection and Adjustment.)
27	Valve Test2 RL		
28	Valve Test2 RR		

7. Inspection at Electronic Control Unit Connector

- As essential part of troubleshooting, this inspection is performed to ensure that various signals from the electronic control unit are duly transmitted via vehicle harnesses and connectors. Note that ⓫, ⓬... shown in the table are also found in “3. Inspection Based on Diagnosis Code” of this manual.

7.1 Electronic control unit connector terminal arrangement

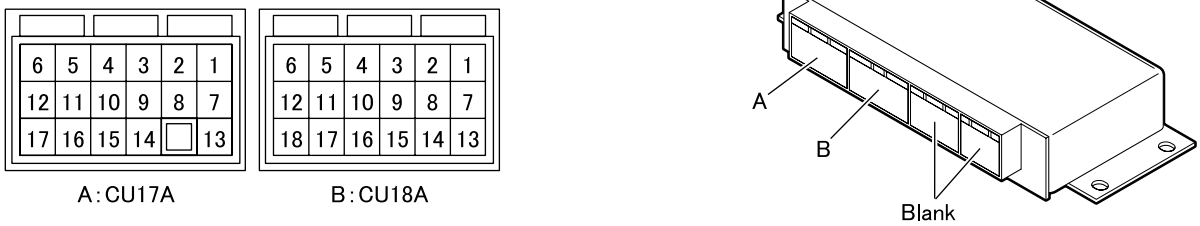

P63464E

7.2 Inspection procedure

- Inspection is performed with connectors disconnected and otherwise, depending on the nature of check.

CAUTION ⚠

- **Never touch terminals not involved in the check being performed. Take particular care not let the tester cause a short circuit between terminals.**

Check item	Measurement
⓫ Electronic control unit power voltage	<Electronic control unit power supply> [Condition] • Vehicle harness connected (check to be performed at back side of connector) [Criteria] Between terminals (+) – (–): A17-A14 • Starter switch OFF: 0V • Starter switch ON: 11 to 16V <Control valve power supply> [Condition] • Vehicle harness connected (check to be performed at back side of connector). [Criteria] Between terminals (+) – (–): A1-A6; 11 to 16V
⓬ Anti-lock brake system auxiliary brake cut relay signal voltage	[Condition] • Starter switch ON • Vehicle harness connected (check to be performed at back side of connector) [Criteria] Between terminals (+) – (–): A7-A6 • Anti-lock brake system ON (relay activated): 0V • Anti-lock brake system OFF (relay not activated): 11 to 16V

Check item	Measurement
⓪③ Wheel speed sensor resistance	[Condition] • Starter switch OFF • Connector disconnected; check at vehicle-side connector [Criteria] <Front-axle left-wheel> Between terminals: B10-B11: 1400 ± 200 Ω (coil resistance) B10-A6: 1M Ω or higher (insulation resistance) <Front-axle right-wheel> Between terminals: B8-B9: 1400 ± 200 Ω (coil resistance) B8-A6: 1M Ω or higher (insulation resistance) <Rear-axle left-wheel> Between terminals: B13-B14: 1400 ± 200 Ω (coil resistance) B13-A6: 1M Ω or higher (insulation resistance) <Rear-axle right-wheel> Between terminals: A3-A9: 1400 ± 200 Ω (coil resistance) A9-A6: 1M Ω or higher (insulation resistance)
⓪④ Control valve resistance	[Condition] • Starter switch OFF • Connector disconnected; check at vehicle-side connector [Criteria] <Front-axle> Between terminals: B5-B18: 5.5 ± 0.35 Ω (pressure holding side) B12-B18: 5.5 ± 0.35 Ω (outlet side) <Rear-axle left-wheel> Between terminals: B1-B15: 5.5 ± 0.35 Ω (pressure holding side) B7-B15: 5.5 ± 0.35 Ω (outlet side) <Rear-axle right-wheel> Between terminals: B3-B16: 5.5 ± 0.35 Ω (pressure holding side) B2-B16: 5.5 ± 0.35 Ω (outlet side)

ON-VEHICLE INSPECTION AND ADJUSTMENT

1. Functional Check

1.1 Inspection with vehicle in stationary state

- While pressing the brake pedal, check the control valves, brake pipes and connections for air leakage.
- If air is leaking from the control valve unit, replace it. Retighten air pipes and connections if leaky.

1.2 Inspection of anti-lock brake system operation while running vehicle

CAUTION ⚠

- **During this inspection, do not let any other vehicles and people in the test course.**

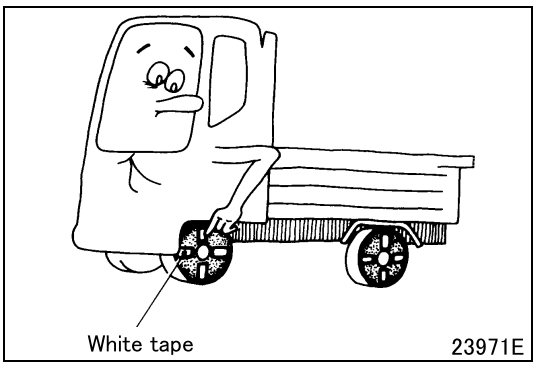

- Perform the inspection with the vehicle unloaded.
- Attach white tape to the wall of each tire to facilitate the observation of front and rear wheels.
- Turn the starter switch from OFF to ON. The warning lamp should be lit.
- The warning lamp should go out after 2 seconds.
- Run the vehicle at 20 to 30 km/h {12 to 19 mph} and apply the brakes. All the wheels should not lock up.

1.3 Operational inspection of control valve

(1) Outline

- The operational inspection of the control valve for each wheel is performed by effecting a train of relative workings of its outlet and pressure holding valves (to increase, decrease, hold and release pressure).
- The operation of the control valve is as depicted below. (For details, see “STRUCTURE AND OPERATION” in this manual.)

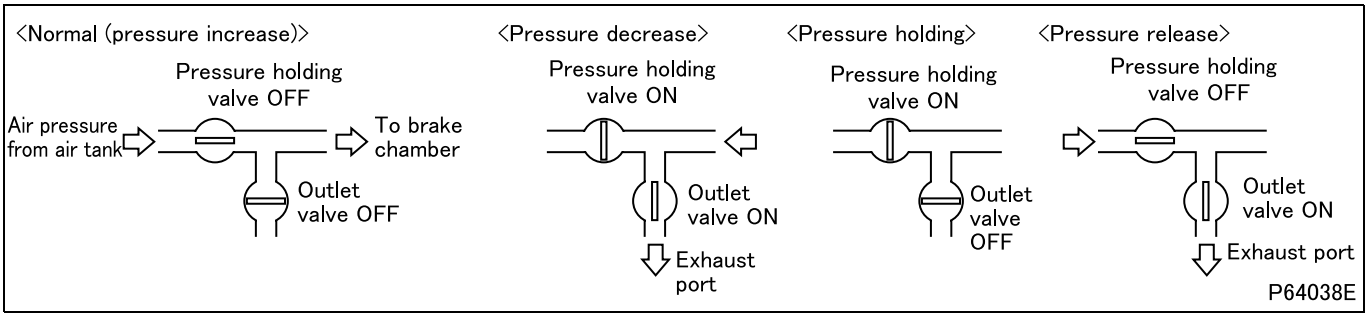

- For the inspection, use Multi-Use Tester actuator test procedures.
  - Actuator test No. 21 to 24 (anti-lock brake system valve test 1): Inspect the control valve by effecting false activation of the electronic control unit with pressure decreased, pressure held and pressure slowly increased (repetition of pressure increase and holding).
  - Actuator test No. 25 to 28 (anti-lock brake system valve test 2): Check for air exhaust noise and braking power by making the control valve operate (to release, increase, decrease and hold pressure).

CAUTION ⚠

- **To avoid a brake failure due to wrong pipe connection, be sure to perform functional checks after the control valve is replaced or reinstalled.**

(2) Preparation

- Place the axle subjected to inspection on the brake tester.
- Before testing the front brake, apply the parking brake. For testing the rear brake, apply chocks to the front wheels to hold them in place.
- Check the brake tester rollers and tires dry. Protect them against water, etc. while they are checked.
- Release the parking brake, and read the drag force of the wheel under inspection.
- Connect the Multi-Use Tester. (See Gr00.)
- Make sure that the transmission is in neutral, then start the engine.

(3) Inspection with false activation of anti-lock brake system

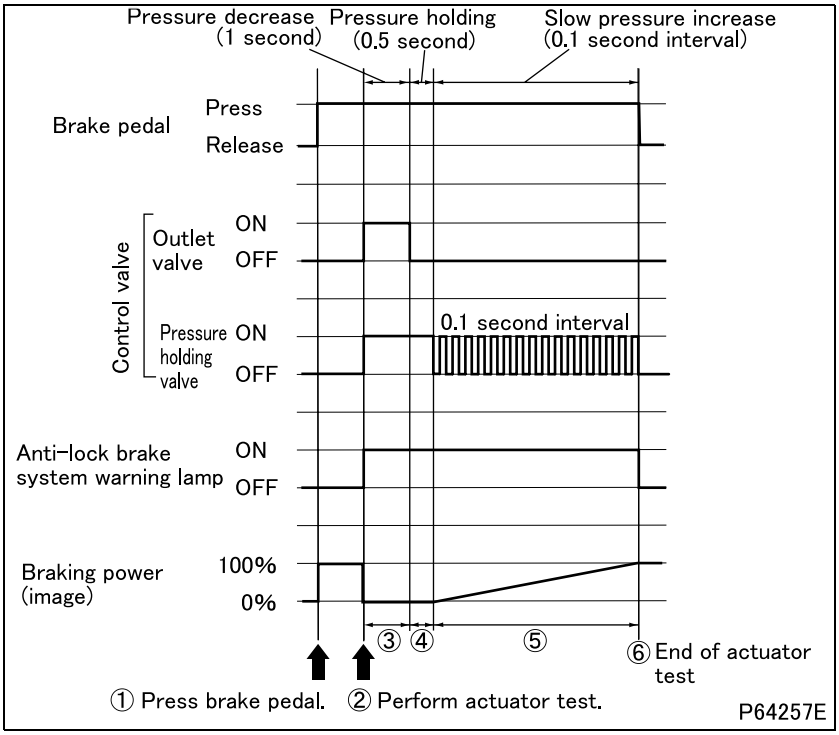

- Hold the brake pedal down throughout the actuator test. (1)
- Perform Multi-Use Tester actuator test [anti-lock brake system valve test 1] on the wheel under inspection. (2)
- Both the outlet and pressure holding valves are activated (ON). Air pressure in the brake chamber is decreased (for 1 second). Verify by the brake tester that the pressure decrease results in a drop in braking power. (3)
- Air pressure in the brake chamber is held for 0.5 second with the outlet valve deactivated (OFF) and the outlet valve activated (ON). Braking power remains down. (4)
- The pressure holding valve minutely repeats a cycle of ON (pressure holding) and OFF (pressure increase). Braking power should gradually increase back to 100%. (5)
- The actuator test ends. Release the brake pedal. (6)
- If any abnormality is observed, inspect outlet and pressure holding valve workings of the control valve.

(4) Inspection of outlet and pressure holding valve workings of control valve

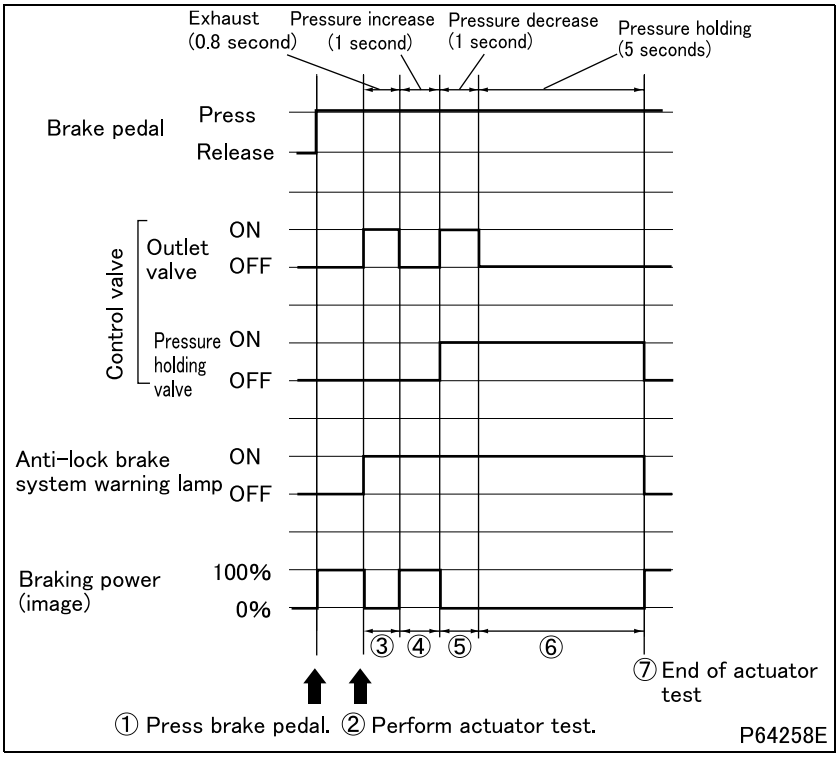

- Hold down the brake pedal throughout the test. (1)
- Perform Multi-Use Tester actuator test [anti-lock system valve test 2] on the wheel under inspection. (2)
- The outlet valve is activated (ON) and the pressure holding valve is deactivated (OFF). Air pressure from the brake chamber and air tank is let out (for 0.8 second). Braking power should drop with an air exhaust noise heard from the control valve. (3)
- Both the outlet and pressure holding valve are deactivated (OFF). Air pressure should be increased and braking power should be regained as a result. (4)
- Both the outlet and pressure holding valve are activated (ON). Air pressure in the brake chamber should be decreased and braking power would drop as a result. (5)
- The outlet valve is deactivated (OFF) and the pressure holding valve is activated (ON). Air pressure in the brake chamber is held (for 5 seconds). Braking power remains down. (6)
- The actuator test ends, with both the outlet valve and pressure holding valve deactivated (OFF). As the brake pedal remains pressed, braking power should be regained again. (7)

- If inspection finds faults described below, perform appropriate troubleshooting in accordance with the following table.

Symptom	Probable cause	Action
Brake pedal is pressed but no braking power is generated.	Brake line or brake related device except control valve faulty	See Gr35.
	Air line in control valve clogged	Replace control valve.
Braking power is not reduced or not regained after reduced.	Control valve air piping incorrect	Correct piping.
	Control valve faulty	Replace control valve.
	Control valve harness connection incorrect	Connect harness correctly.

2. Oscilloscopic Inspection through Wheel Speed Sensor Signal Waveform

- The tester is inappropriate to inspection for dented rotor or missing rotor tooth. Instead, use the oscilloscope function of the Multi-Use Tester or an oscilloscope capable of waveform recording.
- In many cases, dented rotor or missing rotor tooth results from the contact of the rotor press-fitted in the hub tip with the axle or elsewhere that can occur in the process of the hub and brake drum being assembled to the axle. Therefore, care should be taken so that the rotor does not touch other parts when the hub and brake drum are assembled to the axle.

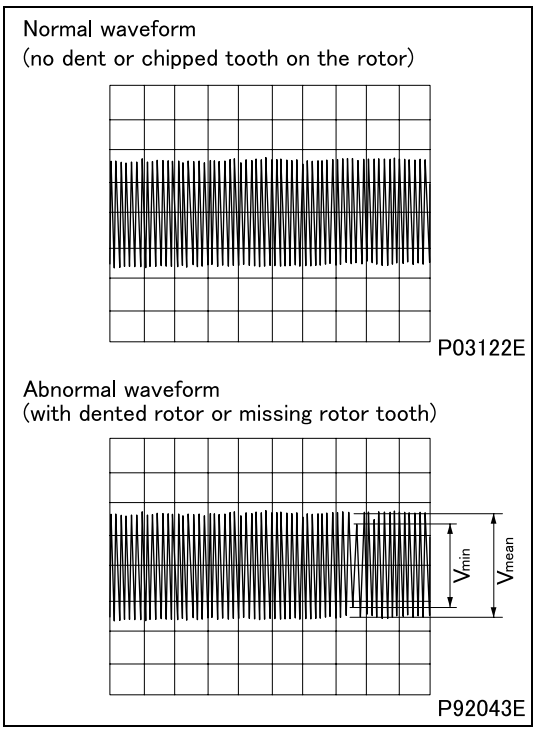

2.1 Inspection

- Jack up the wheel under inspection. Disconnect the wheel speed sensor connector.
- Connect the oscilloscope terminals to the disconnected connector. Rotate the wheel at a certain speed and check oscilloscopic waveform for dented rotor or missing rotor tooth.
- If any wave is evidently smaller in width than others, there should be a dented rotor or missing rotor tooth. The standard wave width is as calculated below.

$$\frac{\text{Vmean} - \text{Vmin}}{\text{Vmean}} \times 100 \leq 20\%$$

where
Vmin: Minimum wave width
Vmean: Average of maximum wave widths

- If there is a wave more than 20% smaller in width than others, visually examine the rotor for the defect and replace if necessary. (See Gr26, 27.)

M E M O

INSPECTION OF ELECTRICAL COMPONENTS

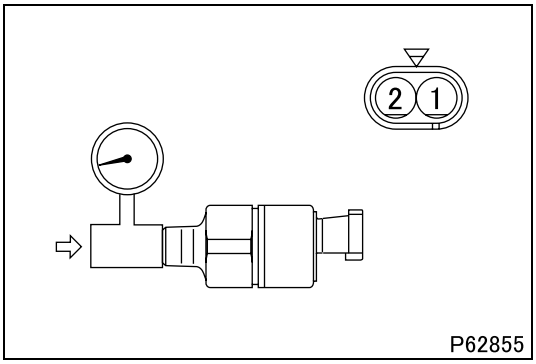

#042 Inspection of stop lamp switch

- Perform the following checks. Replace the switch if faulty.

(1) Check without air pressure applied

- Check that there is no continuity between the terminals 1 and 2.

(2) Check with air pressure applied

- Apply air pressure slowly, starting with 0 kPa {0 psi, 0 kgf/cm^2}.
- Check that air pressure is at the standard value when continuity is established between the terminals 1 and 2.

Standard value (working pressure)	29 ± 9.8 kPa {4.2 ± 1.4 psi, 0.3 ± 0.1 kgf/cm^2}

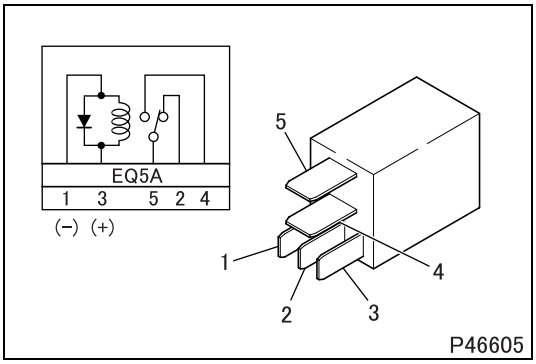

#180 Inspection of relay (normally open 5-pin relay)

- Check the relay for continuity and function. If faulty, replace the relay.

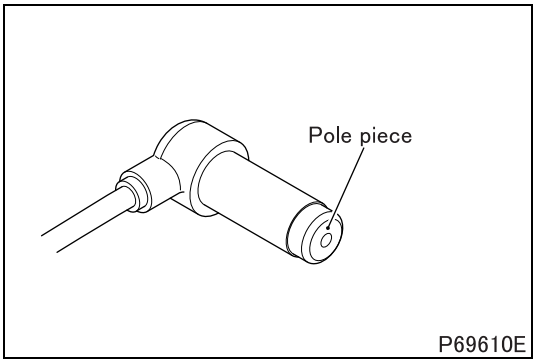

#329 Inspection of wheel speed sensor

- Perform the following checks. Replace the wheel speed sensor if faulty.

CAUTION ⚠

- **The pole piece is magnetized by the built-in magnet of the wheel speed sensor. Be careful not to let metal parts stick onto the pole piece.**

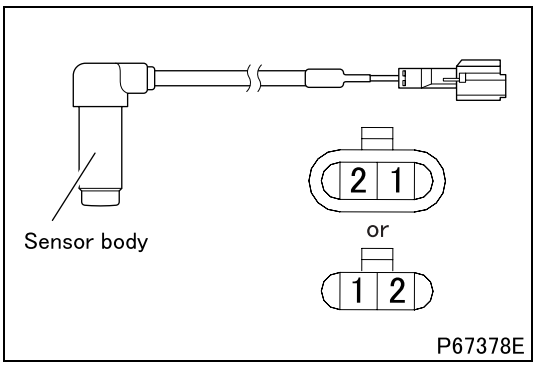

(1) Coil resistance

- Measure resistance between the terminals 1 and 2.

Standard value	1400 ± 200 Ω

(2) Insulation resistance

- Measure resistance between the terminal 1 and vehicle body and between the terminal 2 and sensor body.

Standard value	1MΩ or above

(3) Open circuit

- Unclamp the harness loose, then bend and stretch it to determine whether or not a transient open circuit occurs. At the same time, check the connecting condition of connector terminals.

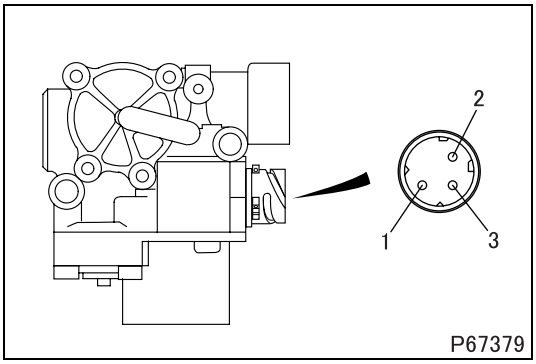

#589 Inspection of control valve

- Perform the following checks. Replace the valve if faulty.

(1) Coil resistance

Standard value	Pressure holding valve	1–3	5.5 ± 0.35 Ω
	Outlet valve	1–2	

(2) Insulation resistance

- Measure resistance between each terminal and the valve body.

Standard value	1MΩ or above

COMPONENTS LOCATION

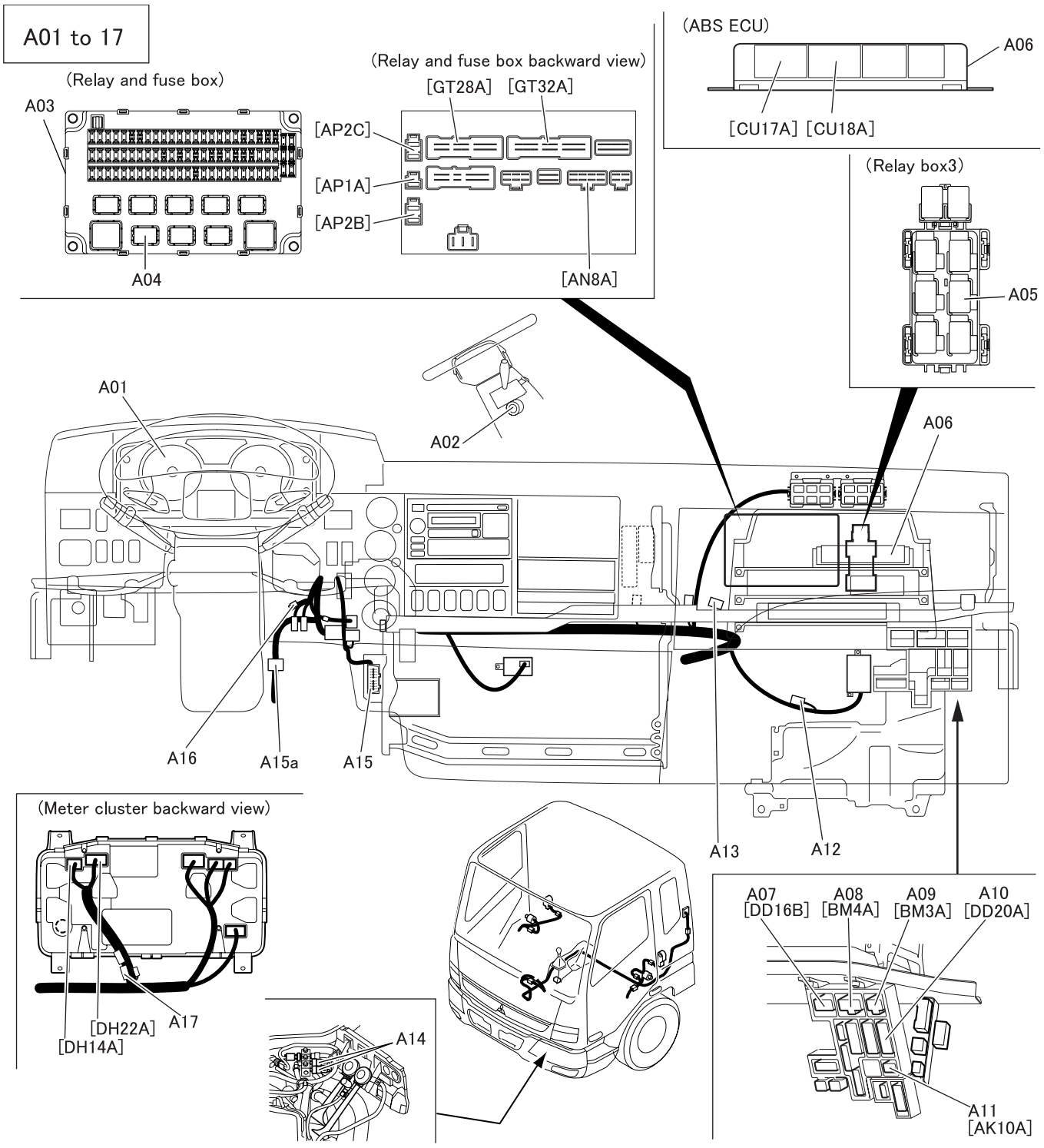

A01 Meter cluster
A02 Starter switch
A03 Relay and fuse box
A04 Stop lamp relay
A05 ABS exhaust brake cut relay
A06 ABS ECU
A07–11 Connection of cab harness and chassis harness
A12 Diode unit
A13 Joint connector (J/C–1)
A14 Stop lamp switch
A15 Diagnostic connector
A15a Connection of cab harness and headlamp harness
A16 Diagnosis switch
A17 Joint connector (J/C–6)

ECU : Electronic control unit
ABS : Anti–lock brake system

Indicate by connector type [ ].

L02672

B01 to 10

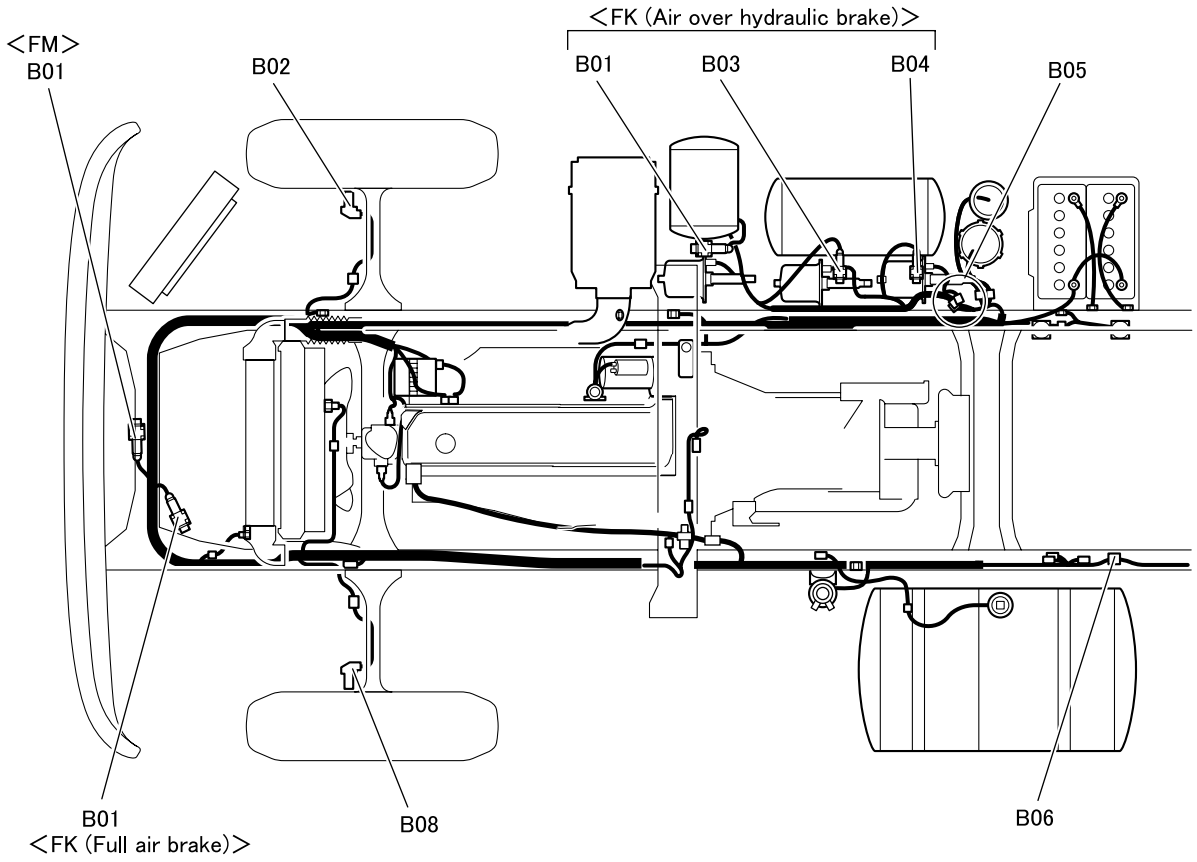

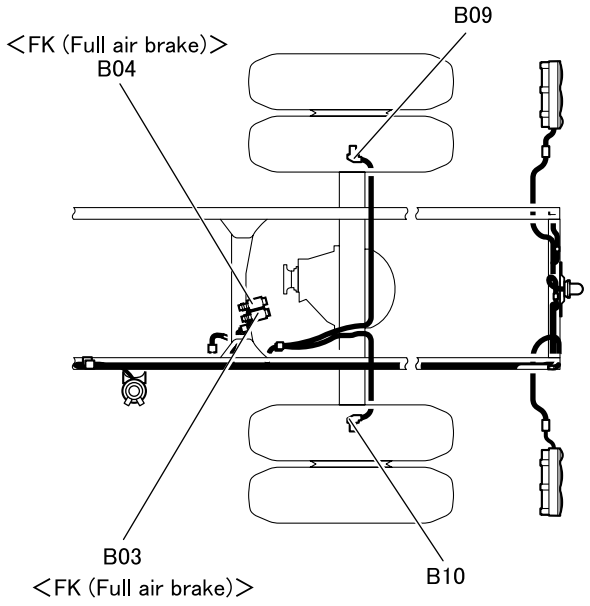

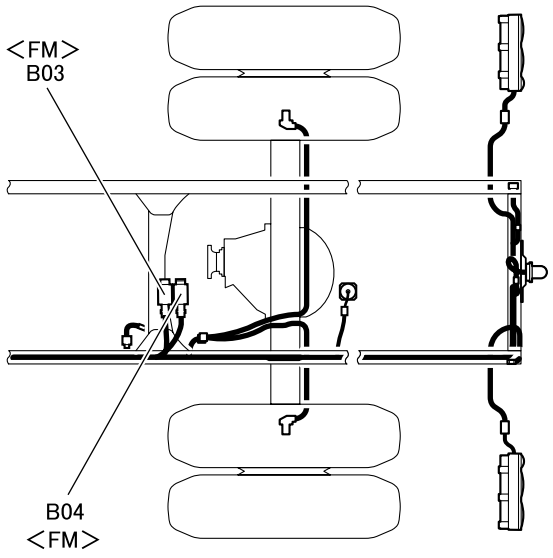

B01	Control valve (Front)	B06	Connection of chassis harness and rear chassis harness
B02	Front wheel speed sensor, RH	B08	Front wheel speed sensor, LH
B03	Control valve, LH (Rear)	B09	Rear wheel speed sensor, RH
B04	Control valve, RH (Rear)	B10	Rear wheel speed sensor, LH
B05	Connection of chassis harness and ABS harness		

L02673

B20 to 24

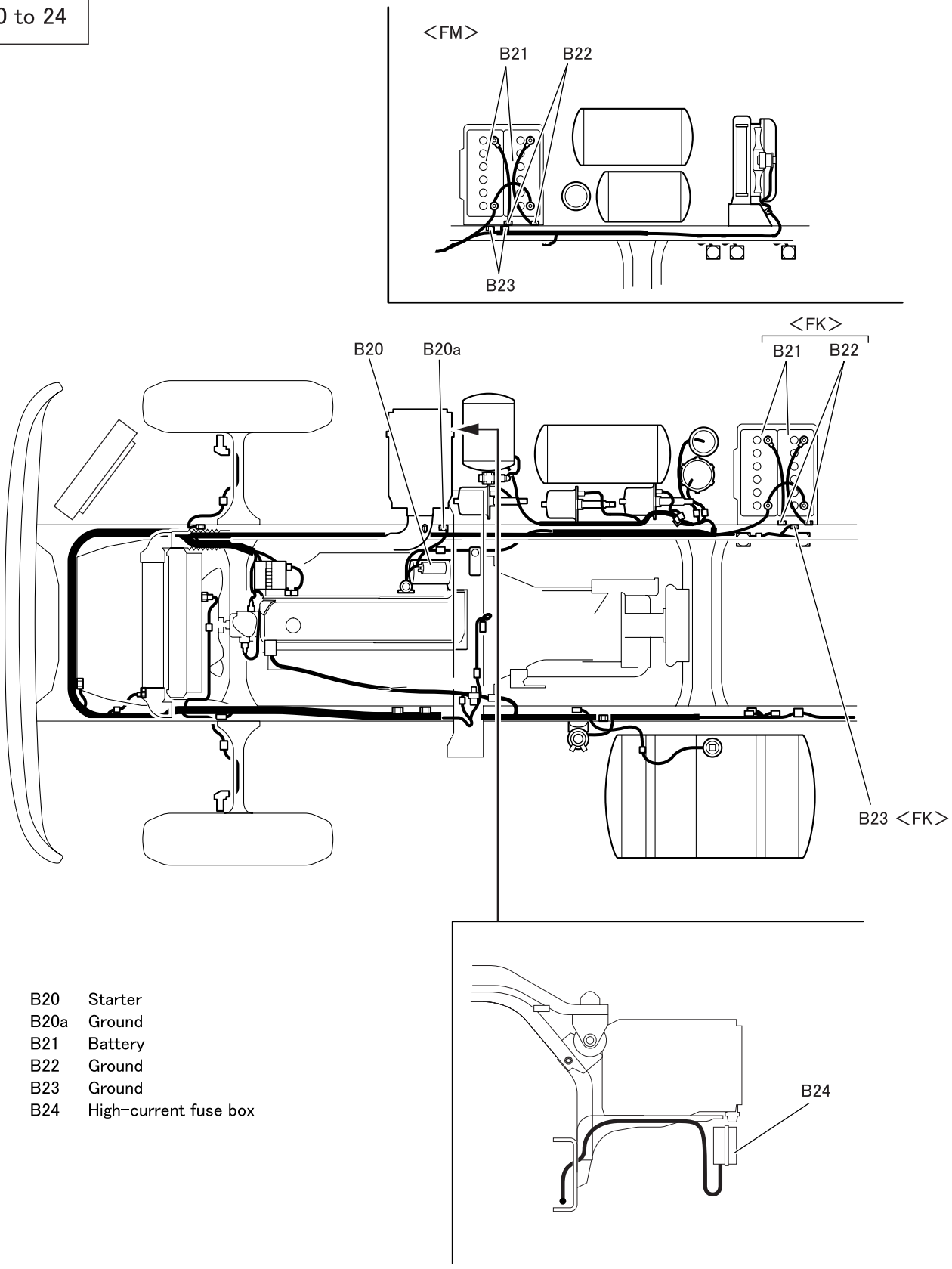

B20 Starter
B20a Ground
B21 Battery
B22 Ground
B23 Ground
B24 High-current fuse box

L02674

M E M O

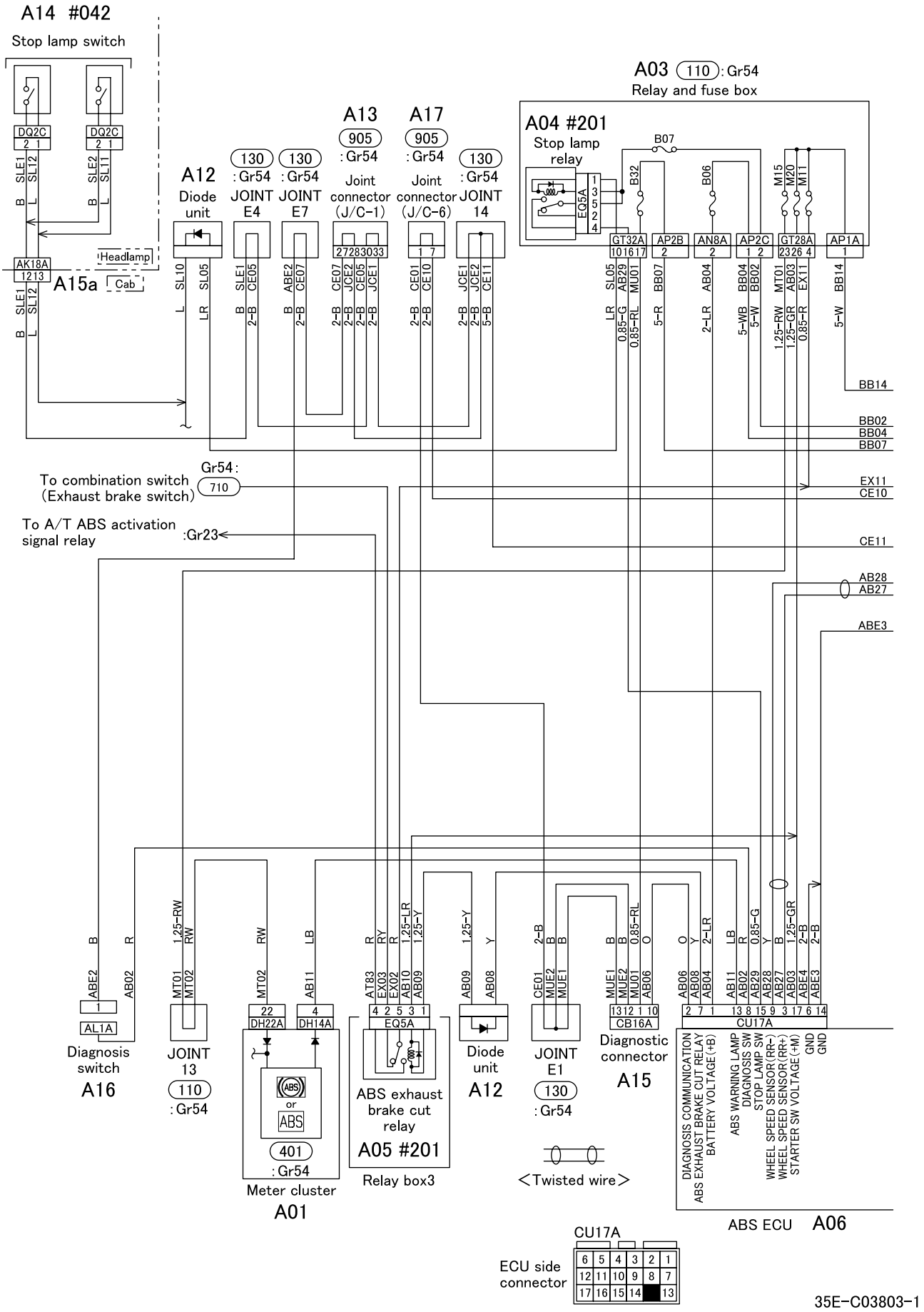
A14 #042
Stop lamp switch
A03 (110) :Gr54
Relay and fuse box
A04 #201
Stop lamp relay
A13
(905) :Gr54
Joint connector (J/C-1)
A17
(905) :Gr54
Joint connector (J/C-6)
A12
Diode unit
(130) :Gr54 JOINT E4
(130) :Gr54 JOINT E7
(130) :Gr54 JOINT 14
Headlamp
A15a
Cab
To combination switch (Exhaust brake switch)
Gr54: (710)
To A/T ABS activation signal relay
:Gr23
Diagnosis switch
A16
JOINT 13
(110) :Gr54
Meter cluster
A01
ABS exhaust brake cut relay
A05 #201
Relay box3
Diode unit
A12
JOINT E1
(130) :Gr54
Diagnostic connector
A15
<Twisted wire>
ABS ECU
A06
CU17A
ECU side connector
DIAGNOSIS COMMUNICATION
ABS EXHAUST BRAKE CUT RELAY
BATTERY VOLTAGE(+B)
ABS WARNING LAMP
DIAGNOSIS SW
STOP LAMP SW
WHEEL SPEED SENSOR(RR-)
WHEEL SPEED SENSOR(RR+)
STARTER SW VOLTAGE(+M)
GND
GND

35E-C03803-1

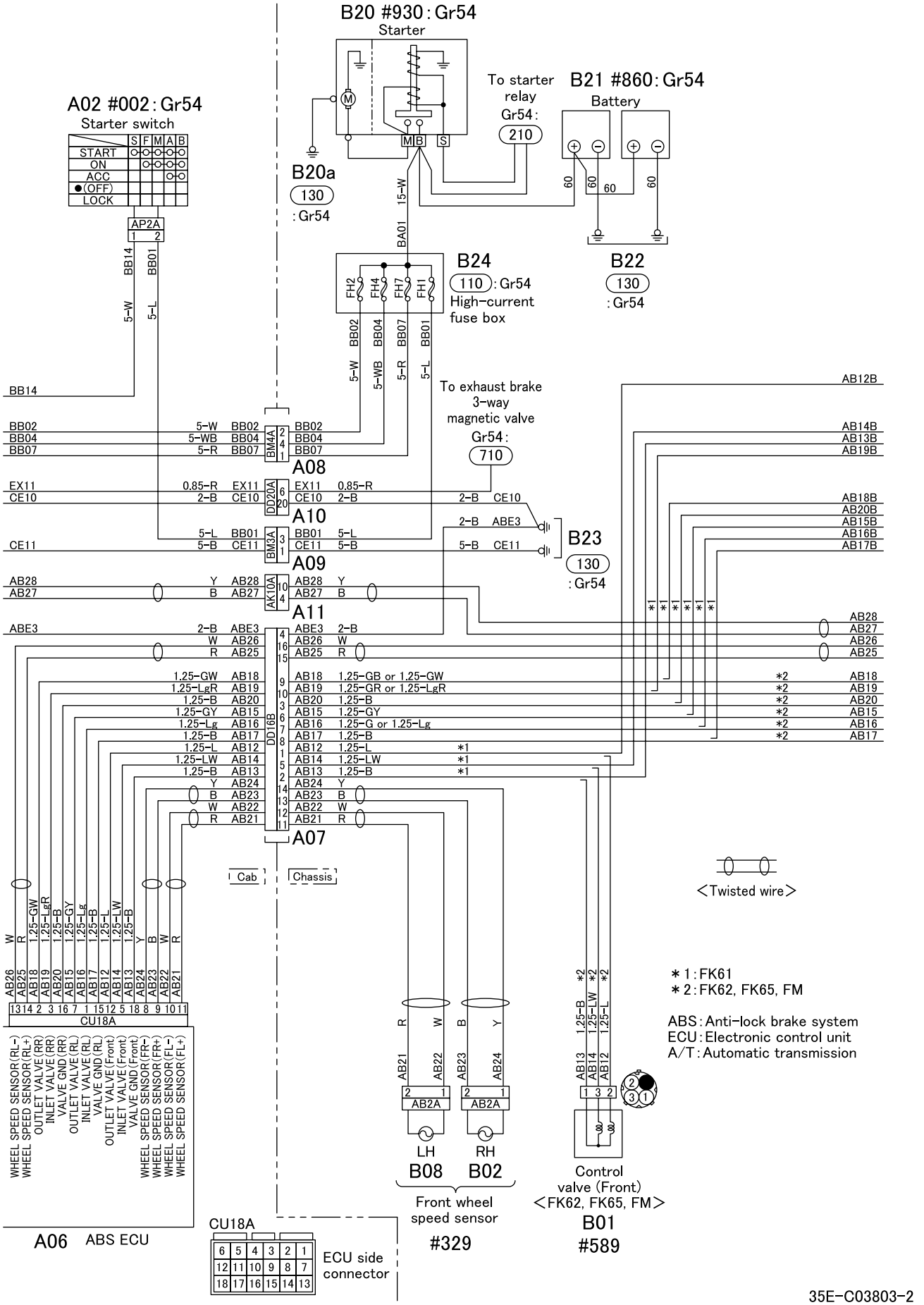
B20 #930 : Gr54
Starter
To starter relay Gr54 : 210
B21 #860 : Gr54
Battery
A02 #002 : Gr54
Starter switch
START
ON
ACC
●(OFF)
LOCK
B20a
130
: Gr54
B24
110 : Gr54
High-current fuse box
B22
130
: Gr54
To exhaust brake 3-way magnetic valve Gr54 : 710
A08
A10
A09
A11
A07
B23
130
: Gr54
Cab
Chassis
<Twisted wire>
＊1 : FK61
＊2 : FK62, FK65, FM
ABS : Anti-lock brake system
ECU : Electronic control unit
A/T : Automatic transmission
LH
B08
RH
B02
Front wheel speed sensor
#329
Control valve (Front)
<FK62, FK65, FM>
B01
#589
A06 ABS ECU
CU18A
ECU side connector

35E-C03803-2

ELECTRICAL WIRING DIAGRAM

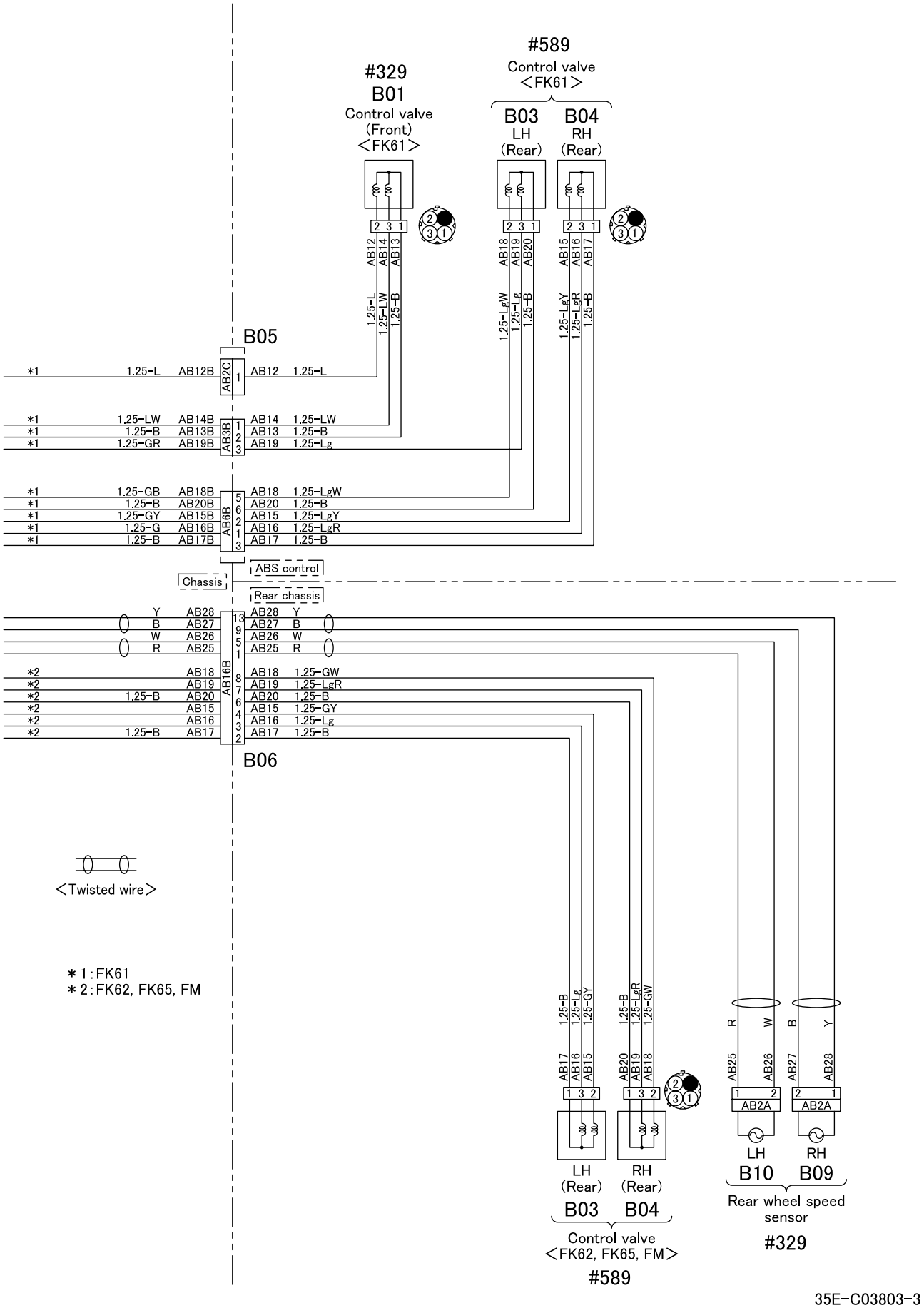

35E-C03803-3

Group 36A

Parking Brake
<CENTER PARKING BRAKE>

Table of Contents

Back

Home

MITSUBISHI FUSO TRUCK OF AMERICA, Inc.

Pub.No.TWME0709-36A

INDEX

SPECIFICATIONS 36A-2

STRUCTURE AND OPERATION
1. **Parking Brake System 36A-3**
2. **Parking Brake Lever 36A-4**
3. **Parking Brake 36A-4**

TROUBLESHOOTING 36A-5

ON-VEHICLE INSPECTION AND ADJUSTMENT
1. **Adjustment of Parking Brake Shoe Clearance 36A-6**
2. **Inspection and Adjustment of Parking Brake Lever 36A-7**

PARKING BRAKE CONTROL 36A-8

PARKING BRAKE 36A-12

SPECIFICATIONS

Item		Specifications
Brake	Type	Internal expanding type acting on propeller shaft
		Air over hydraulic brake vehicle
	Operation type	Mechanical cable type
Parking brake	Type	Duo servo type
	Brake drum I.D. mm {in.}	ϕ254 {10}
	Lining width $\times$ thickness mm {in.}	60 $\times$ 5.8 {2.36 $\times$ 0.23}

1. Parking Brake System

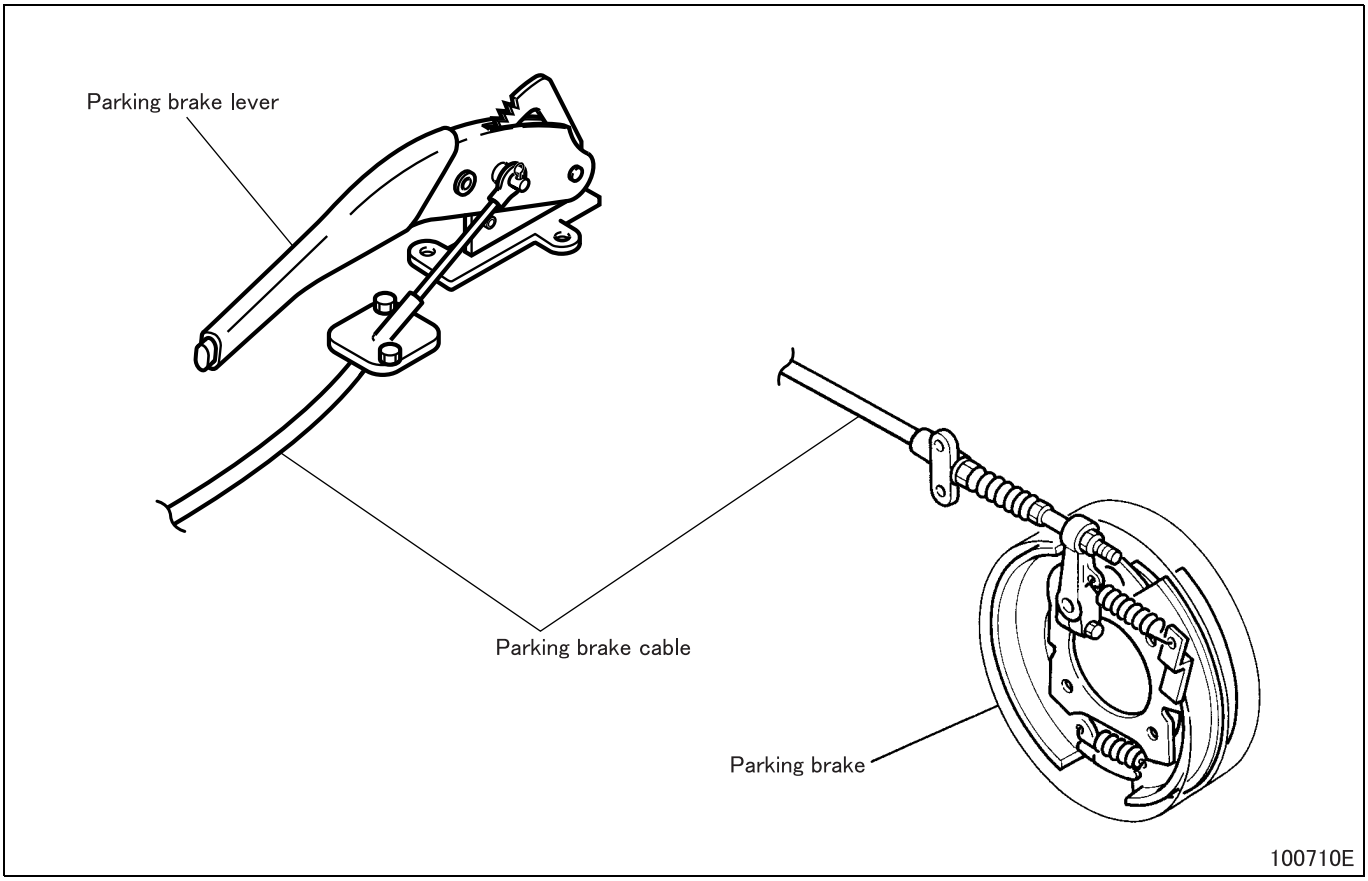

2. Parking Brake Lever

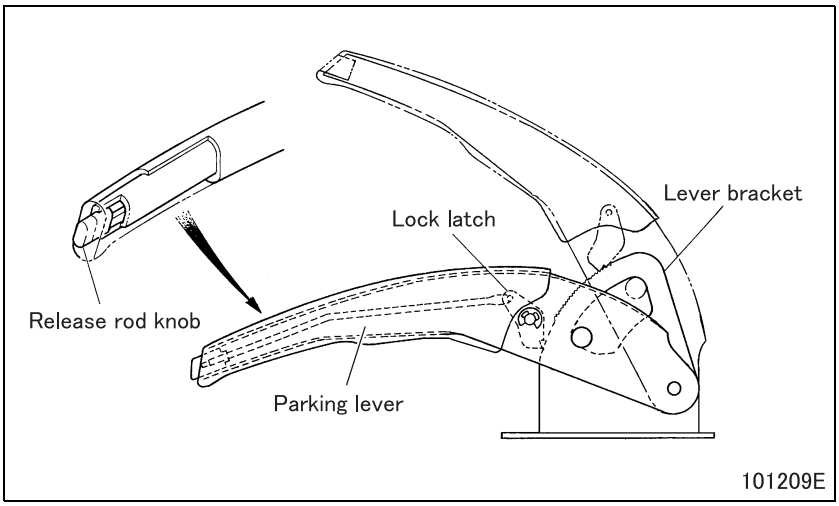

- Pulling the parking brake lever makes the parking brake work, at which point the lock latch engages with the lever bracket and the lever is locked.
- To release the parking brake lever, slightly pull it up while pushing the release rod knob. This disengages the lock latch from the lever bracket, allowing the parking brake lever to return to the released position.

3. Parking Brake

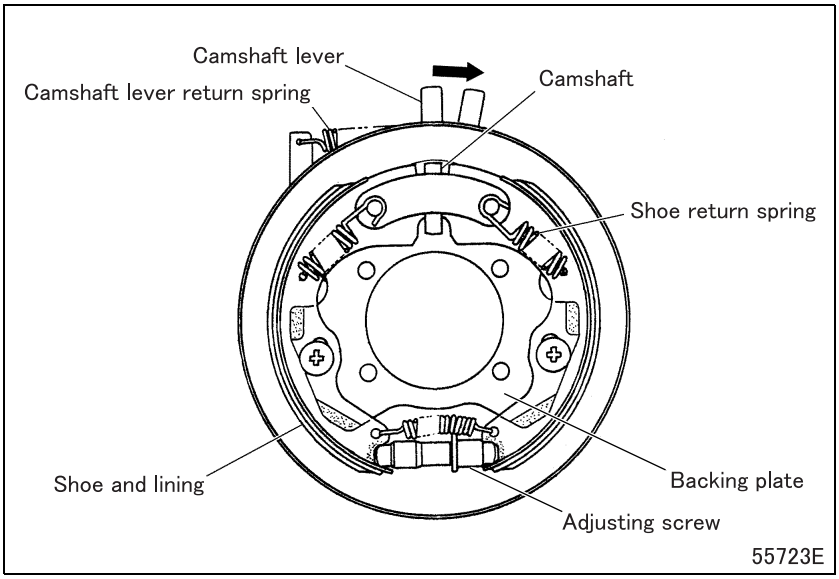

- The camshaft lever that actuates the shoe and lining is a built-in component of the parking brake.
- Pulling the parking brake lever pulls the parking brake cable, which in turn pull the camshaft lever.
- When the camshaft lever is pulled, it rotates the camshaft to expand the shoe and linings. At the same time the adjusting screw moves and both shoe and linings work as a leading shoe.
- When the parking brake lever (parking lever) is returned to the released position, the repercussive force of the shoe return spring releases the brake.

Possible causes / Symptoms		Parking brake does not work	Parking brake release not smooth (dragging)	Parking brake lever operating physical force insufficient	Parking brake lever operating physical force excessive	Reference Gr
Parking brake cable	Inner cable stretched or damaged	O	O	O	O	
	Inner cable improperly adjusted	O	O	O	O	
Parking brake lever	Lock latch and lever bracket pawl engaged improperly	O				
	Pulling stroke insufficient		O		O	
	Pulling stroke excessive	O		O		
Parking brake	Shoe clearance insufficient		O		O	
	Shoe clearance excessive	O		O		
	Parking brake drum inner surface deformed or warped	O		O		
	Lining worn unevenly	O		O		
	Brake drum inner surface greasy or oily	O				
	Lining surface greasy or oily	O				
	Camshaft lever return spring fatigued or fractured		O			
	Shoe return spring fatigued or fractured		O			

ON-VEHICLE INSPECTION AND ADJUSTMENT

1. Adjustment of Parking Brake Shoe Clearance

Service standards (Unit: mm {in.})

Location	Maintenance item	Standard value	Limit	Remedy
–	Brake shoe clearance	0.1 to 0.25 {0.0039 to 0.0098}	–	Adjust

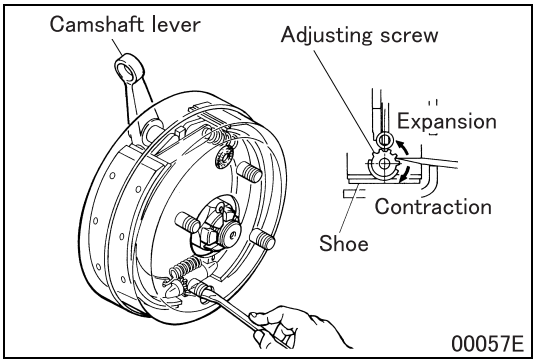

- Chock the front wheels and raise the rear wheels with a jack.
- Operate the parking brake lever to release the parking brake. (The parking lever is released from locking.)
- Using a standard screwdriver inserted through the shoe adjusting hole in the parking brake drum, turn the adjusting screw in the expansion direction shown to bring the shoe into close contact with the brake drum.
- Turn the adjusting screw 8 notches in the contraction direction shown from the position where the shoe is in close contact with the drum. The shoe clearance should be adjusted to the standard value.

2. Inspection and Adjustment of Parking Brake Lever

Service standards

Location	Maintenance item	Standard value	Limit	Remedy
–	Parking brake lever pulling stroke (with operating physical operating of 490 N {110 lbs, 50 kgf})	7 to 10 notches	–	Adjust or inspect

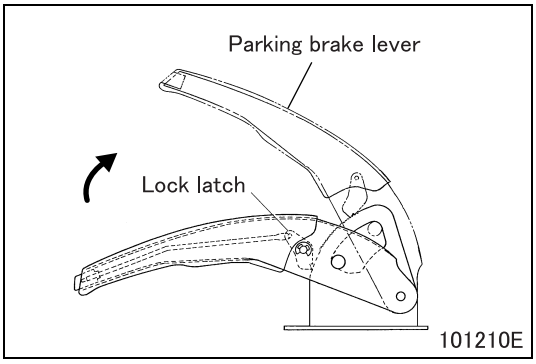

[Inspection]

- Pull the parking brake lever from the released position with the specified operating physical force and count the number of cleared notches.
- If the count of notches deviates from the specified range of standard values, adjust the length of the parking brake cable.
- If the count of notches (pulling stroke) is still out of the specified range after cable length adjustment, check the parking brake shoe clearance.

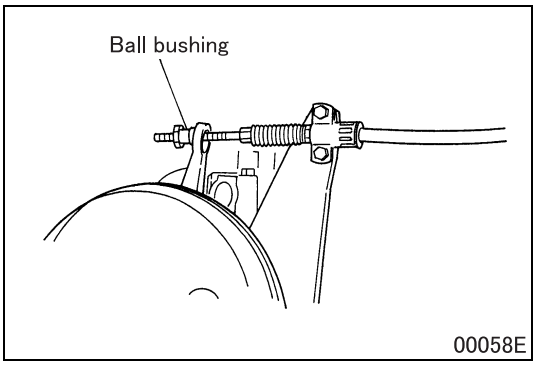

[Adjustment]

- Turn the ball bushing to adjust the length of the parking brake cable.

PARKING BRAKE CONTROL

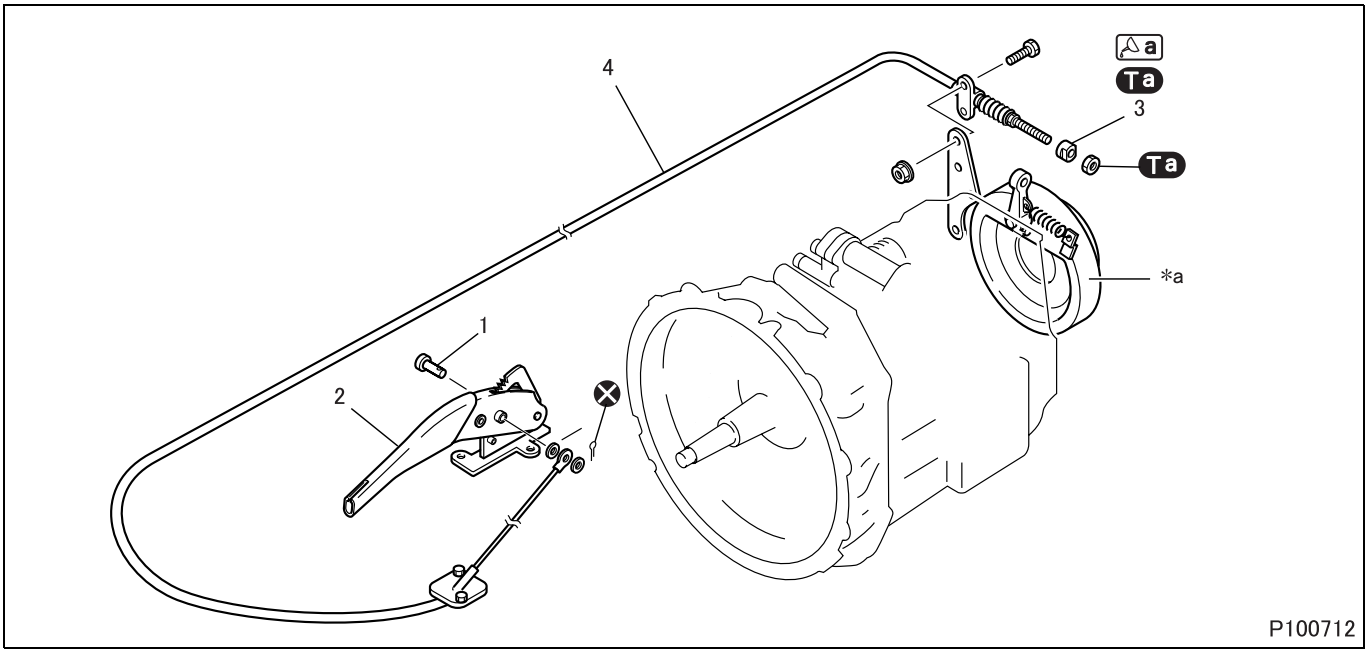

● **Removal sequence**

1 Clevis pin
2 Parking brake lever (See later section.)
3 Ball bushing
4 Parking brake cable

***a**: Parking brake or retarder and parking brake

● **Installation sequence**

Follow the removal sequence in reverse.

Tightening torque (Unit: N·m {ft.lbs, kgf·m})

Mark	Parts to be tightened	Tightening torque	Remarks
Ta	Ball bushing and nut (parking brake cable mounting)	8 to 13 {5.9 to 9.6, 0.8 to 1.3}	–

Lubricant and/or sealant

Mark	Point of application	Specified lubricant and/or sealant	Quantity
a	Spherical surfaces of ball bushing	Chassis grease [NLGI No.1 (Li soap)]	As required

M E M O

PARKING BRAKE CONTROL

Parking Brake Lever

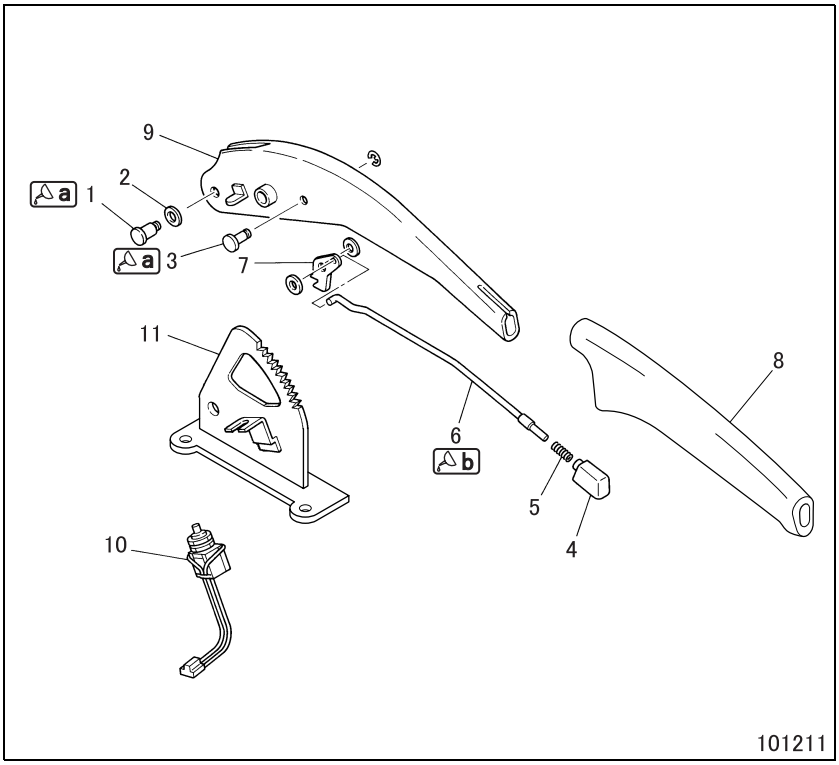

●Removal sequence

1 Pin
2 Spacer
3 Pin
4 Release rod knob
5 Return spring
6 Release rod
7 Lock latch
8 Grip
9 Parking brake lever
10 Parking brake switch
11 Lever bracket

●Installation sequence

Follow the removal sequence in reverse.

Lubricant and/or sealant

Mark	Point of application	Specified lubricant and/or sealant	Quantity
a	Rotating and sliding areas of pin	Chassis grease [NLGI No.1 (Li soap)]	As required
b	Release rod knob of release rod mounting thread	Cemedine 1500	As required

◆Installation procedure◆

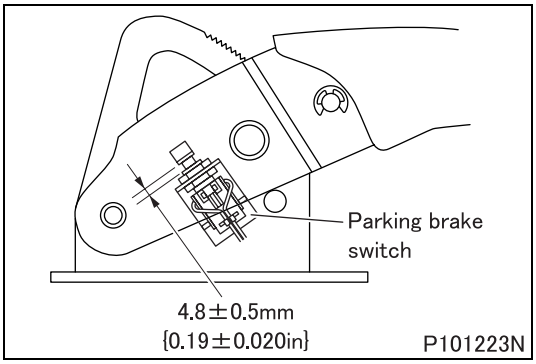

■ Installation: Parking brake switch

- Install the parking brake switch to the illustrated dimension.

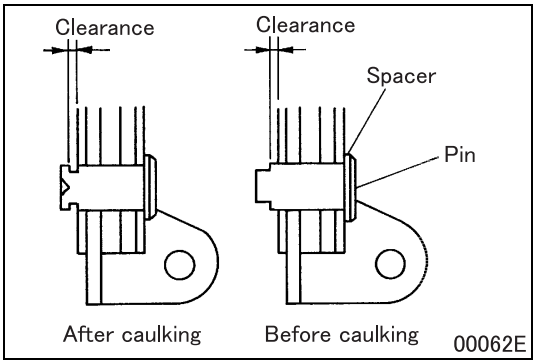

■ **Installation: Pin**

- Do not use a spacer if clearance before caulking is less than 0.6 mm {0.024 in.}. If the clearance is between 0.6 mm and 0.96 mm {0.024 and 0.038 in.}, adjust it with a spacer.
- Make sure that the clearance after caulking is as shown in the table below. Reassemble if the clearance is out of the dimensions shown in the table below.

	Without spacer	With spacer
Clearance after caulking	0.06 to 0.6 mm {0.0024 to 0.024 in.}	0 to 0.36 mm {0 to 0.014 in.}

PARKING BRAKE

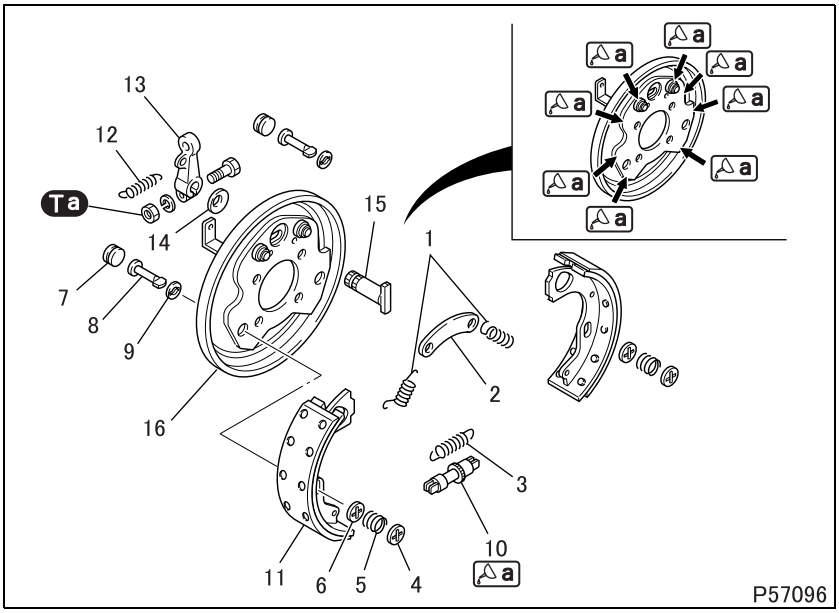

- For removal and installation of the parking brake, see Gr23.

● Disassembly sequence

1 Shoe return spring
2 Anchor pin brace
3 Adjusting wheel return spring
4 Shoe holddown cup
5 Shoe holddown spring
6 Shoe holddown cup
7 Cover
8 Shoe holddown pin
9 Shoe holddown washer
10 Adjusting screw
11 Shoe and lining
12 Camshaft lever return spring
13 Camshaft lever
14 Wave washer
15 Camshaft
16 Support plate and cover

● Assembly sequence

Follow the disassembly sequence in reverse.

CAUTION ⚠

- **To prevent poor working of the brake, do not smear the surface of the shoe and lining with grease or oil.**

- **When the shoe and lining has been placed with a new one, always check it for contact with the parking brake drum.**

Service standards (Unit: mm {in.})

Location	Maintenance item	Standard value	Limit	Remedy
1	Installed load of shoe return spring (installed length: 75 {2.95})	180 ± 18 N {41 ± 4.0 lbs, 18.5 ± 1.8 kgf}	145 N {33 lbs, 15 kgf}	Replace
3	Installed load of Adjusting wheel return spring (installed length: 85 {3.35})	105 ± 11 N {24 ± 2.4 lbs, 11 ± 1.1 kgf}	86 N {19 lbs, 8.8 kgf}	
5	Installed load of shoe holddown spring (installed length: 14 {0.55})	145 ± 15 N {33 ± 3.3 lbs, 15 ± 1.5 kgf}	115 N {26 lbs, 12 kgf}	
11	Brake lining thickness of shoe and lining	6.4 {0.25}	3.1 {0.12}	
12	Installed load of camshaft lever return spring (installed length: 85 {3.35})	62 ± 5.9 N {14 ± 1.3 lbs, 6.3 ± 0.6 kgf}	49 N {11 lbs, 5 kgf}	

Tightening torque (Unit: N·m {ft.lbs, kgf·m})

Mark	Parts to be tightened	Tightening torque	Remarks
Ta	Nut (camshaft lever mounting)	14 to 23 {10 to 17, 1.4 to 2.3}	–

Lubricant and/or sealant

Mark	Points of application	Specified lubricant and/or sealant	Quantity
a	Brake shoe contact surfaces on both ends of adjusting screw	Brake grease (AKB 100)	As required
	Brake shoe contact surfaces with support plate and cover		
	Brake shoe contact surfaces with anchor pin of support plate and cover		

◆Inspection procedure◆

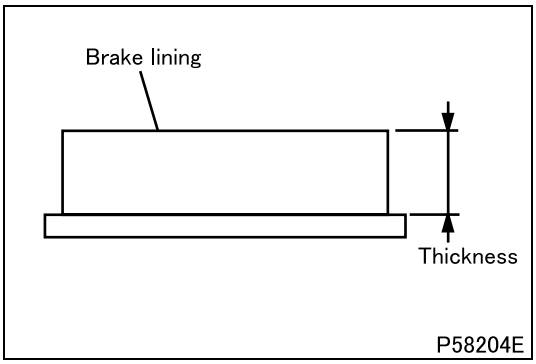

■ Inspection: Brake lining thickness of shoe and lining

- If the measured value is lower than the limit, replace the shoe and lining.

◆Installation procedure◆

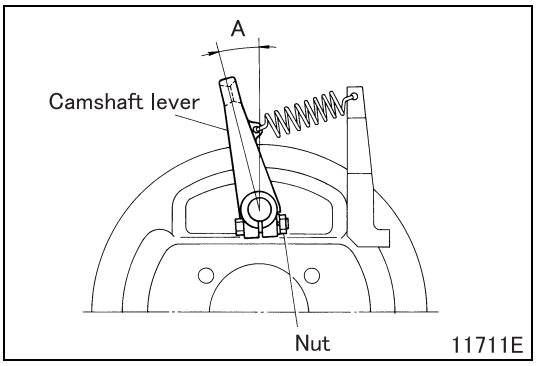

■ Installation: Camshaft lever

- Align the camshaft lever with illustrated angle A and tighten the nut to the specified torque.

A
15°

Group 36B

Parking Brake
<WHEEL PARKING BRAKE>

Table of Contents

Back

Home

MITSUBISHI FUSO TRUCK OF AMERICA, Inc.

Pub.No.TWME0709-36B

INDEX

STRUCTURE AND OPERATION
1. Parking Brake System 36B-2
2. Parking Brake Control Valve 36B-3
3. Spring Brake Valve 36B-4
4. Relay Valve (With Double Check Valve) 36B-7

TROUBLESHOOTING 36B-8

ON-VEHICLE INSPECTION AND ADJUSTMENT
1. Manual Release of Parking Brake 36B-10

PARKING BRAKE CONTROL VALVE 36B-12

SPRING BRAKE VALVE 36B-14

DOUBLE CHECK VALVE 36B-17

RELAY VALVE (WITH DOUBLE CHECK VALVE) 36B-18

1. Parking Brake System

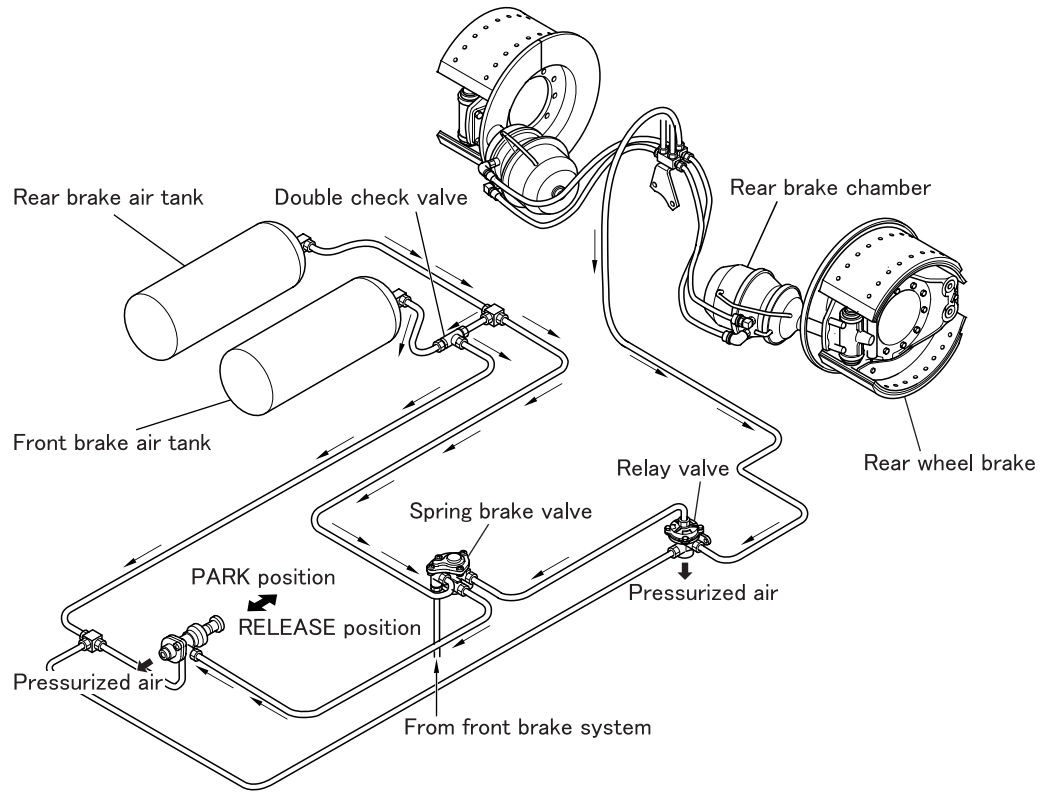

- In the wheel parking brake system, operating parking brake control valve causes rear brake chamber, which contains a spring brake, to apply rear wheel brake, generating braking force.
- Pulling out the knob of parking brake control valve to the PARK position, feeds pressurized air from the parking brake control valve and spring brake valve to relay valve. This exhausts pressurized air in the spring brake in rear brake chamber through the exhaust port of the relay valve, causing the spring brake to generate braking force.
- Pushing in the knob of parking brake control valve to the RELEASE position, feeds pressurized air from rear brake air tank to relay valve via the parking brake control valve.
  Consequently in the separate air system, pressurized air from the rear brake air tank is fed to the spring brake of rear brake chamber via the relay valve, releasing the wheel parking brake.

2. Parking Brake Control Valve

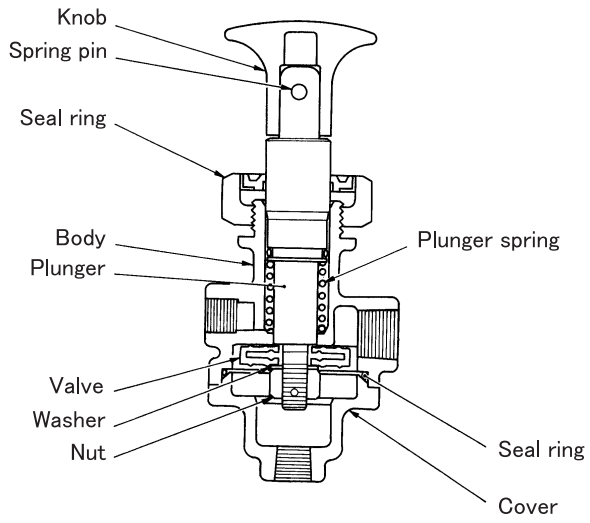

68108E

2.1 Feed action (RELEASE)

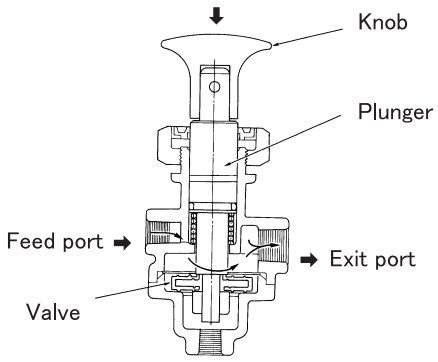

68109E

- When the air pressure at feed port reaches 420 kPa {61 psi, 4.3 kgf/cm^2} or higher, pushing in knob causes valve at the top of plunger to close the exhaust port, feeding pressurized air to exit port.

2.2 Exhaust action (PARK)

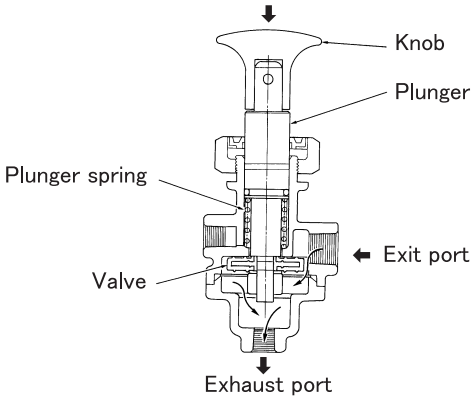

68110E

- Pulling out knob causes valve at the top of plunger to open exhaust port, and remains in that position, closing the feed port. This exhausts the air returned from exit port through the air exhaust port.
- When the air pressure at the supply port drops to 275 kPa {40 psi, 2.8 kgf/cm^2} or lower, the repercussive force of plunger spring overcomes the air pressure acting on valve pushing out knob automatically. This exhausts the air through exit port.

3. Spring Brake Valve

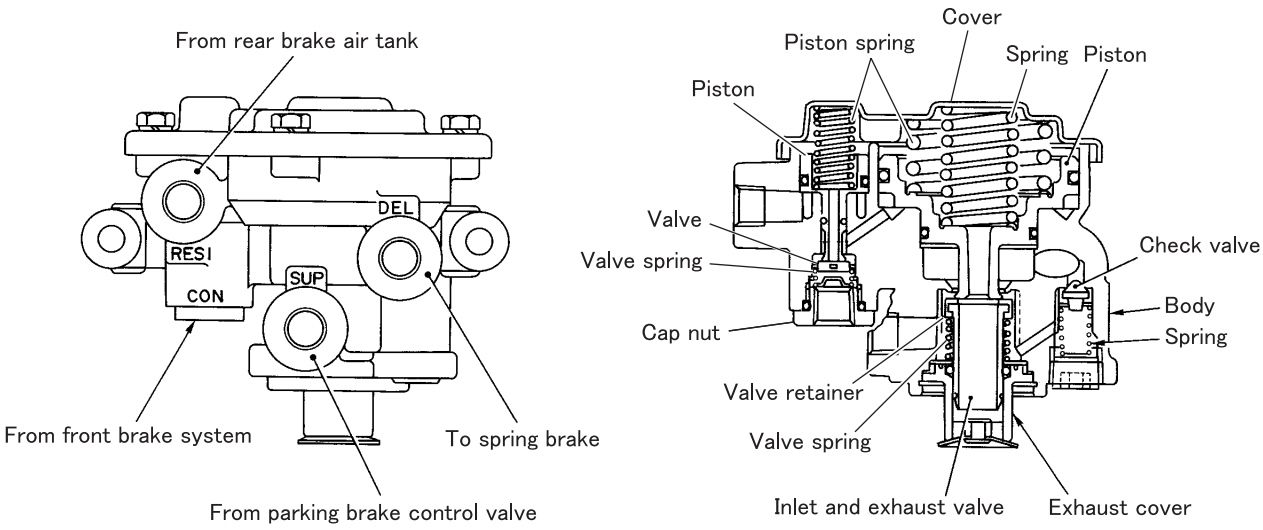

3.1 When parking brake is operated

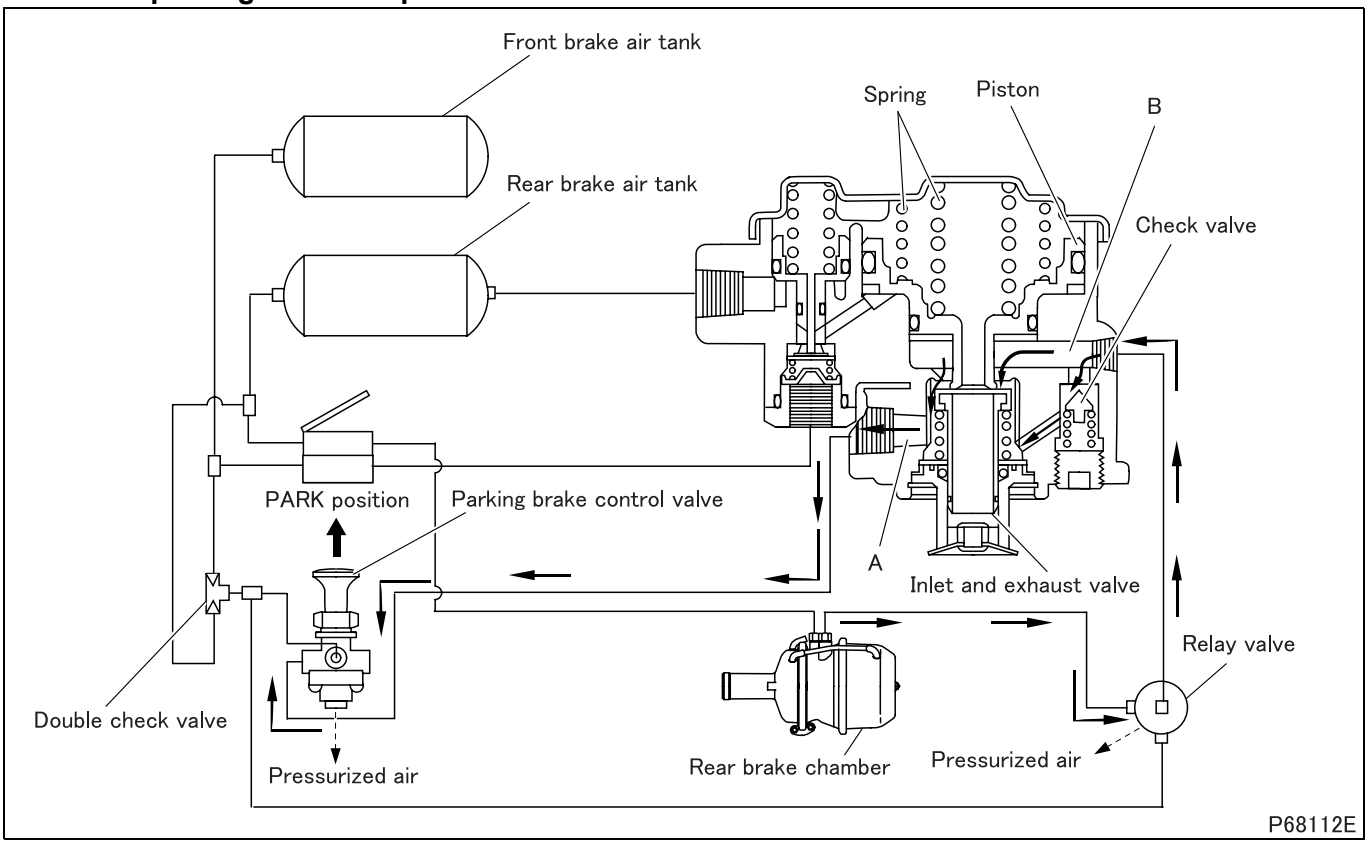

- Pulling out the knob of parking brake control valve to PARK position, exhausts the pressurized air in chamber A of the spring brake valve through the parking brake control valve. Then, the pressurized air in chamber B of the spring brake valve forces down check valve, passes through chamber A, and is exhausted through the parking brake control valve.
- When the air pressure in chamber B of the spring brake valve drops sufficiently, springs at the top of piston force the piston down, opening inlet and exhaust valve. This exhausts the pressurized air, which is fed to relay valve, from the spring brake valve.
- Relay valve exhausts the pressurized air from the spring brake in rear brake chamber through the exhaust port.
- The spring brake of rear brake chamber operates to generate braking force.

3.2 When parking brake is released

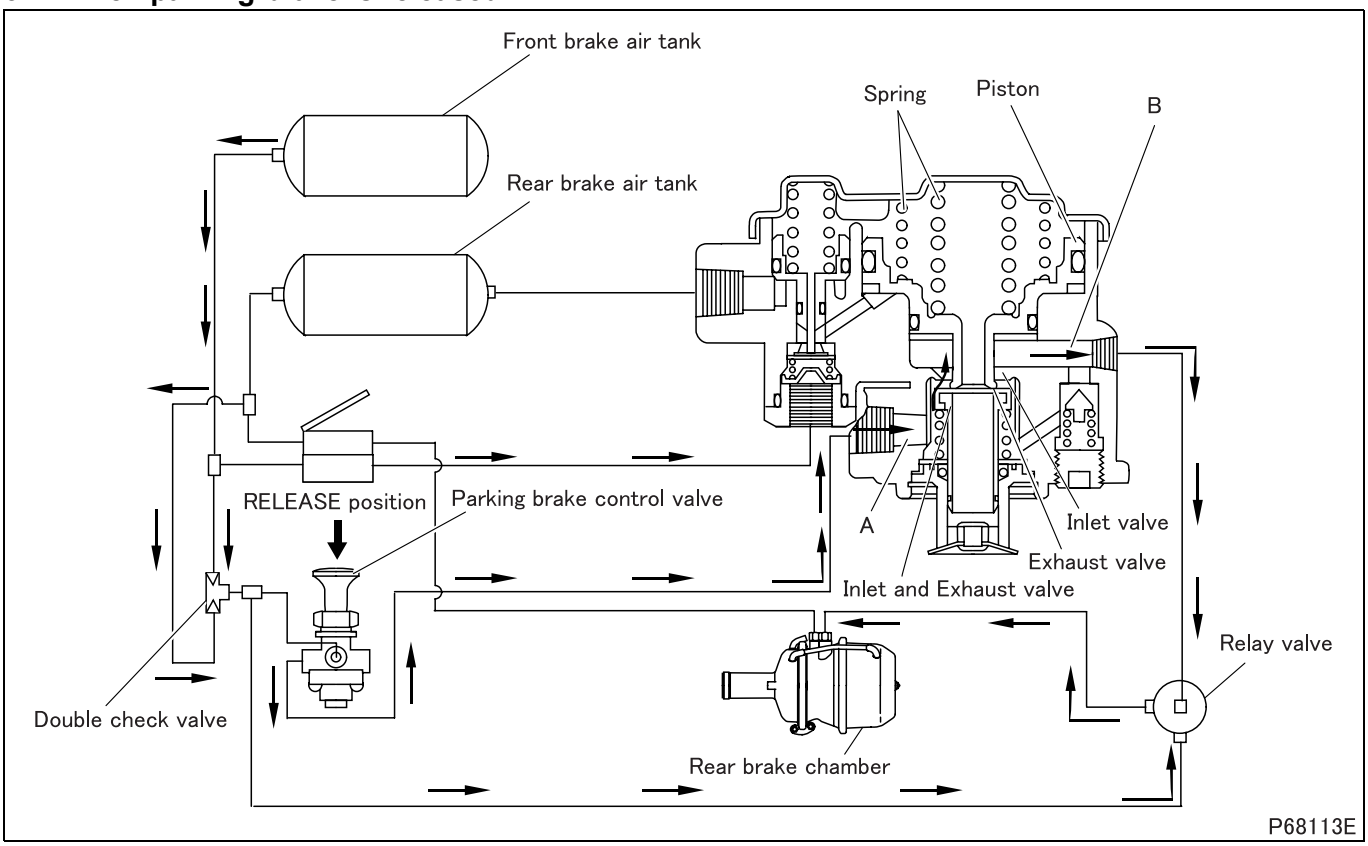

- Pushing in the knob of parking brake control valve to RELEASE position, causes the pressurized air to flow through chamber A of the spring brake valve to chamber B, then the pressurized air is fed to relay valve as air pressure.
- As the air pressure in chamber B rises further, the rising force of piston overcomes the repercussive force of springs. This closes exhaust valve of inlet and exhaust valve, and at the same time lifts the piston and the inlet and exhaust valve together.
- As piston and inlet and exhaust valve rise further, the inlet and exhaust valve closes inlet valve, isolating chambers A and B from each other, stopping the air flow between them.
- When it receives pressurized air, relay valve feeds pressurized air in the separate air system to the spring brake, releasing the wheel parking brake.

4. Relay Valve (With Double Check Valve)

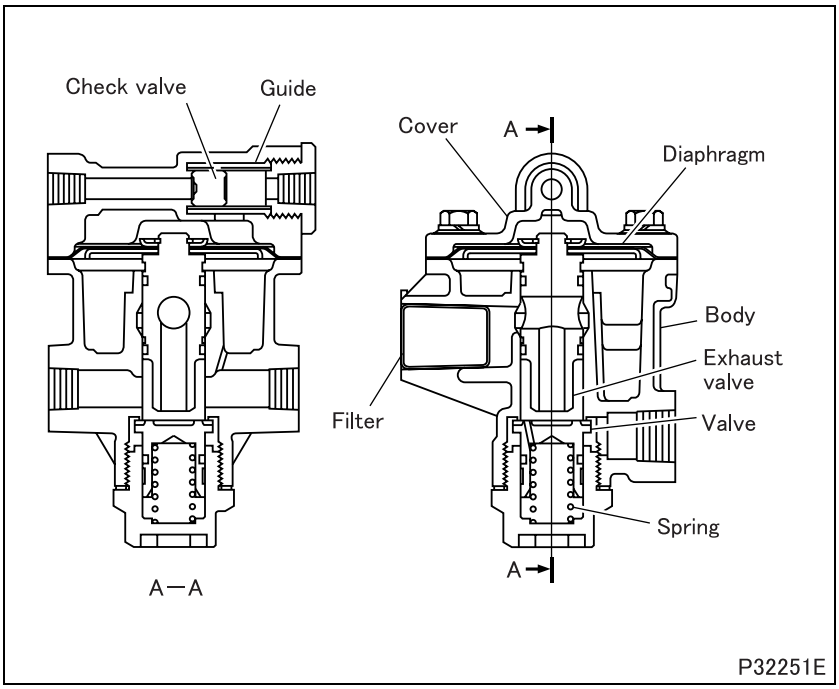

- The relay valve supplies air from the air tank to the brake system under indicated pressure.
- A check valve is incorporated in the cover for double check valve operation.

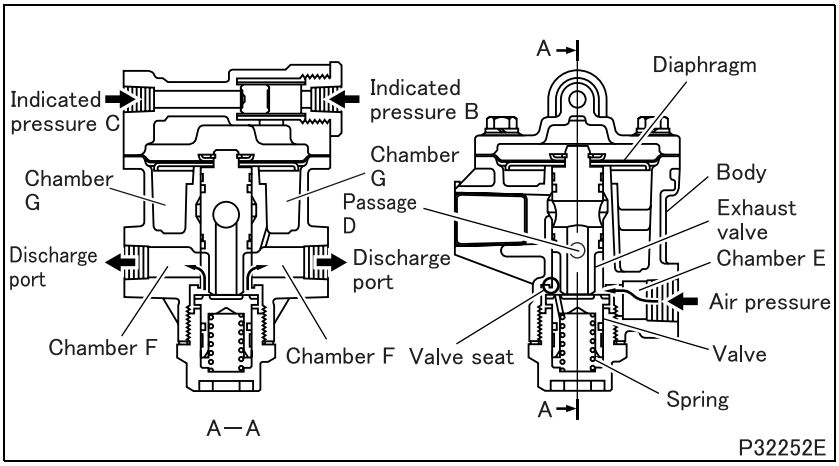

4.1 When operating

- When indicated pressure B or C comes in, the exhaust valve is forced downward together with the diaphragm.
- The exhaust valve is seated on the valve to close the passage D.
- The exhaust valve further presses the spring to compress and the valve leaves the valve seat as a result.
- Air pressure from the air tank flows into the chamber E, then the chamber F, and goes to the discharge port.

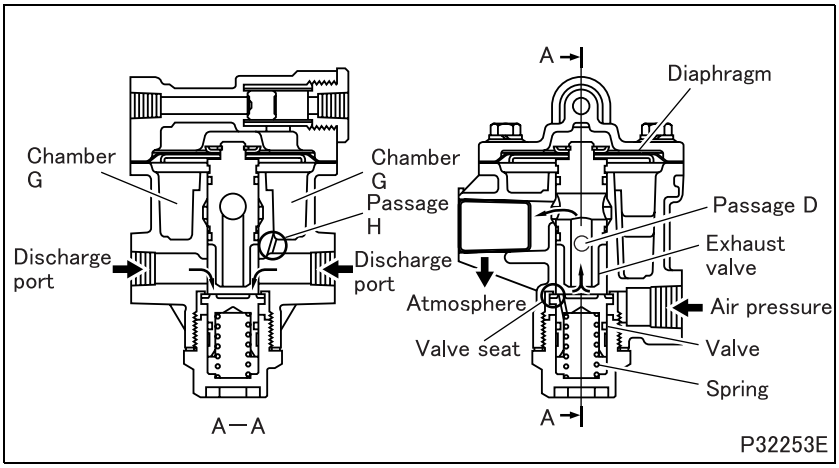

4.2 When releasing

- When indicated B or C is lost, the valve is seated on the valve seat by the spring force to shut off air pressure.
- Air pressure from the discharge port is released into atmosphere from the exhaust port by way of the passage D of the exhaust valve.
- When pressure at the discharge port drops, air pressure in the chamber F is released into atmosphere by way of the passage H and discharge port.

Possible causes \ Symptoms		Parking brake does not work	Parking brake does not release	Reference Gr
Parking control valve	Malfunctioning	O	O	
Spring brake valve	Malfunctioning	O	O	
Brake chamber	Malfunctioning	O	O	Gr35B
Wheel brake	Malfunctioning	O	O	Gr35B
Air line	Air leaking		O	
	Air pressure low		O	

M E M O

1. Manual Release of Parking Brake

- When the parking brake is automatically engaged due to low compressed air pressure, the parking brake should be released again by following the procedure shown below.

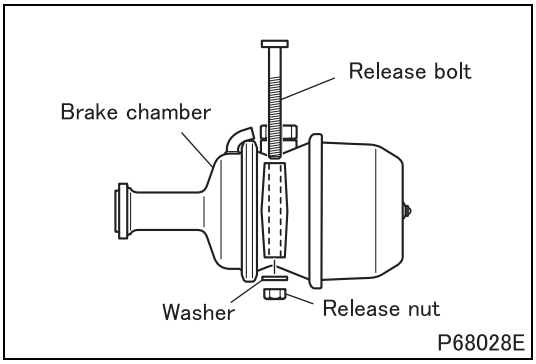

- Release spring brake mechanically.
- Remove the release bolt, washer and release nut from the brake chamber.

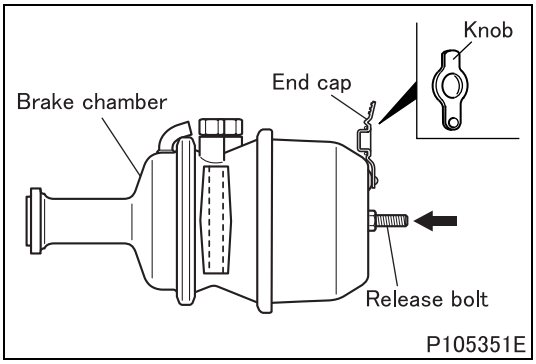

- Remove the end cap without failling to pull up its knob by hand or using a plier or other tools.

CAUTION ⚠

- **Never remove the end cap by inserting a screwdriver or other tools into the brake chamber and prying it to open the chamber. Failure to observe the above can cause the brake chamber to be damaged, allowing water to intrude into the brake chamber. The water can cause rust on spring, leading to breakage in the spring.**

- Insert the release bolt deep into the chamber and turn it a quarter turn.
- Pull the release bolt to check that it does not come off the chamber.
- If the release bolt is pulled off, repeat the above procedure; insert the bolt deep into the chamber and turn it a quarter turn again.

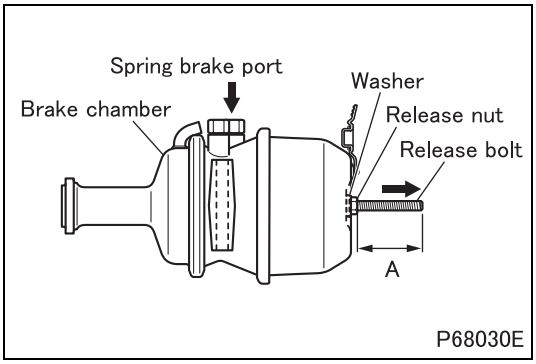

- Attach the washer and the release nut.
- While applying an air pressure of 640 kPa {92 psi, 6.5 kgf/cm^2} into the spring brake port (by setting the hand control valve to the released position), turn the release nut until the threaded portion of the release bolt extends by the dimension A shown below.
  A: 82 mm {3.23 in.} <FK>
  76 mm {2.99 in.} <FM>

CAUTION ⚠

- **Avoid turning the release nut with a torque exceeding 68.6 N·m {51 ft.lbs, 7 kgf·m}. It can damage the brake chamber assembly.**

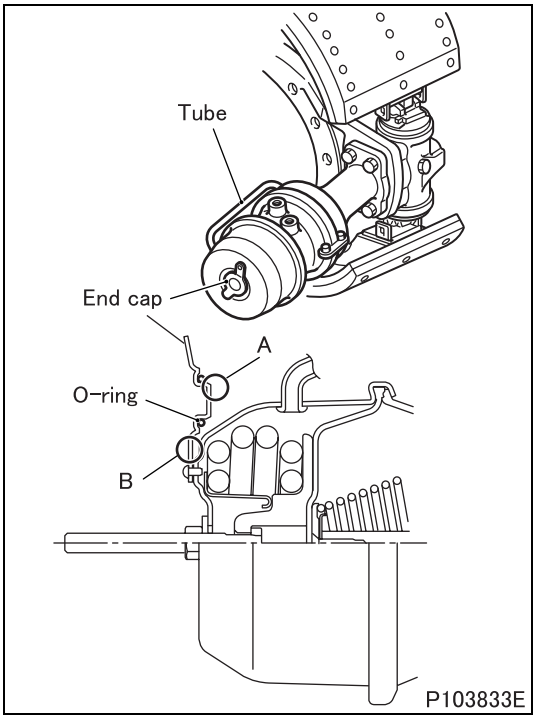

Cancellation of mechanical release of parking brake

- To cancel the mechanical release of parking brake, perform the mechanical release procedure in reverse while confirming the following items.
- Clean the end cap mounting position and confirm that there is no water or dust in that position.
- Confirm that an O-ring is attached to the end cap.
- Using a ϕ15 mm or thinner rod with a dull end such as a release bolt, push in the concave section at the center of the end cap squarely into the piggy back. A click is heard when the section A is securely seated into the piggy back.
- When seating the end cap, be careful not to bend or twist the section B.
- Confirm that there is no damage on the tube and the tube is installed securely.

PARKING BRAKE CONTROL VALVE

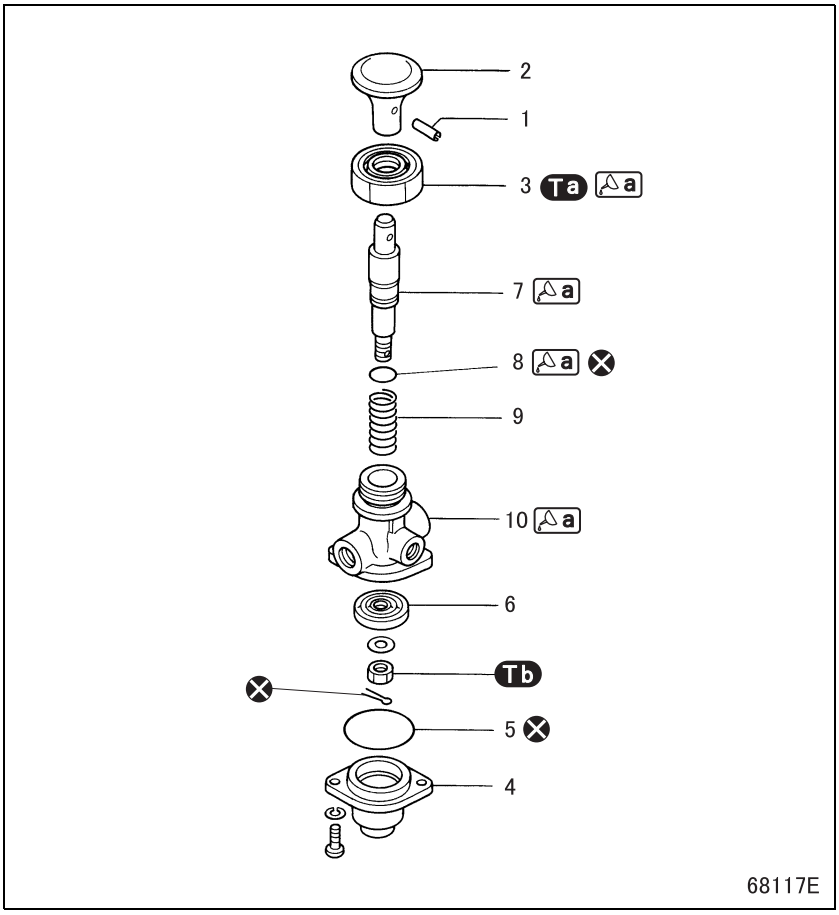

● **Disassembly sequence**

1 Spring pin
2 Knob
3 Seal nut
4 Cover
5 Seal ring
6 Valve
7 Plunger
8 O-ring
9 Plunger spring
10 Body

⊗: Non-reusable parts

● **Assembly sequence**

Follow the disassembly sequence in reverse.

Repair kit: Parking brake control valve kit

Service standards

Location	Maintenance item	Standard value	Limit	Remedy
–	Operating pressure (air pressure when the knob is automatically pushed out from its pushed-in position)	238 to 309 kPa {35 to 45 psi, 2.4 to 3.2 kgf/cm^2}	–	Replace

Tightening torque (Unit: N·m {ft.lbs, kgf·m})

Mark	Parts to be tightened	Tightening torque	Remarks
Ta	Seal nut	24.5 to 34.3 {18 to 25, 2.5 to 3.5}	–
Tb	Nut (valve mounting)	3.4 to 4.4 {2.5 to 3.2, 0.35 to 0.44}	–

Lubricant and/or sealant

Mark	Point of application	Specified lubricant and/or sealant	Quantity
a	Friction surfaces of seal nut and plunger	Multipurpose grease [NLGI No. 2 (Li soap)]	As required
	Friction surface and O-ring groove of plunger		
	Periphery of O-ring		
	Friction surfaces of body and plunger		

◆Inspection after assembly◆

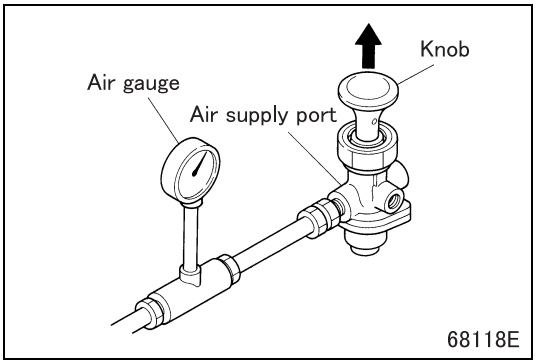

■ Inspection: Parking brake control valve

- While pushing in knob, feed air pressure of 685 kPa {100 psi, 7 kgf/cm^2} via air supply port.
- Gradually decrease the air pressure and confirm that the air pressure required to push out the knob from its pushed-in position is the standard value.

SPRING BRAKE VALVE

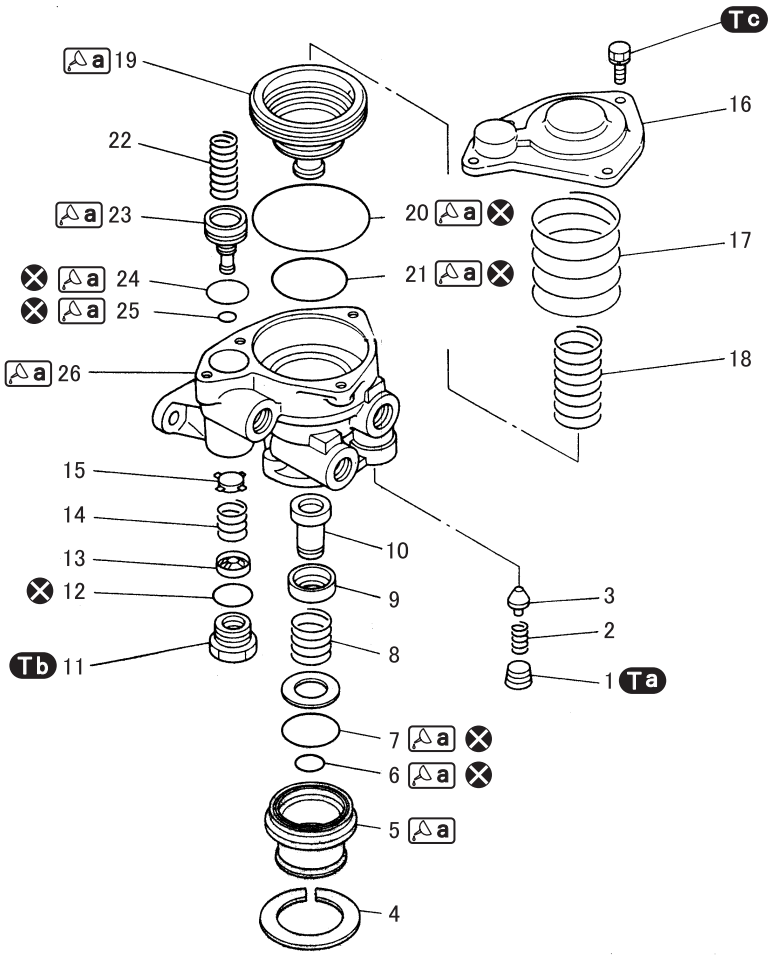

● Disassembly sequence

1 Plug
2 Spring
3 Check valve
4 Retaining ring
5 Exhaust cover
6 O-ring
7 O-ring
8 Valve spring
9 Valve retainer
10 Inlet and exhaust valve
11 Cap nut
12 O-ring
13 Valve stop
14 Valve spring
15 Valve
16 Cover
17 Piston spring
18 Piston spring
19 Piston
20 O-ring
21 O-ring
22 Piston spring
23 Piston
24 O-ring
25 O-ring
26 Body

⊗: Non-reusable parts

● Assembly sequence

Follow the disassembly sequence in reverse.

Repair kit: Spring brake valve kit

Tightening torque (Unit: N·m {ft.lbs, kgf·m})

Mark	Parts to be tightened	Tightening torque	Remarks
Ta	Plug	15 to 20 {11 to 14, 1.5 to 2.0}	–
Tb	Cap nut	11 to 14 {8.0 to 10, 1.1 to 1.4}	–
Tc	Bolt (cover mounting)	5.9 to 8.8 {4.3 to 6.5, 0.6 to 0.9}	–

Lubricant and/or sealant

Mark	Points of application	Specified lubricant and/or sealant	Quantity
a	Friction surfaces of exhaust cover and inlet and exhaust valve	Silicone grease	As required
	O-ring groove and outer periphery of piston		
	Friction surfaces of body and piston		
	Periphery of O-ring		

◆Inspection after assembly◆

■ Inspection: Spring brake valve

- Place wheel chocks at the rear wheels to prevent the vehicle from moving.
- Start the engine to raise the air pressure until the air pressure gauge reads 805^{+29}_{-20} kPa {$115^{+4.3}_{-2.8}$ psi, $8.2^{+0.3}_{-0.2}$ kgf/cm^2}.

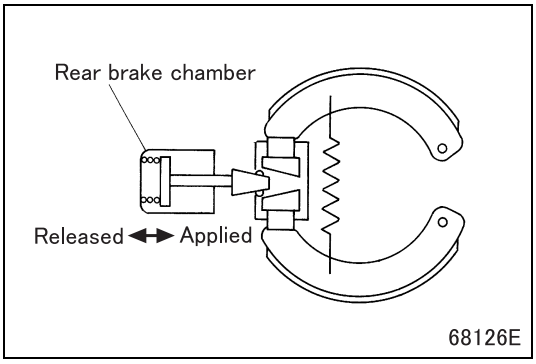

- Confirm that when the knob of the parking brake control valve is pulled out to the PARK position, rear brake chamber operates immediately, applying the wheel parking brake.
- Confirm that when the knob of the parking brake control valve is pushed in to the RELEASE position, rear brake chamber operates, releasing the wheel parking brake.

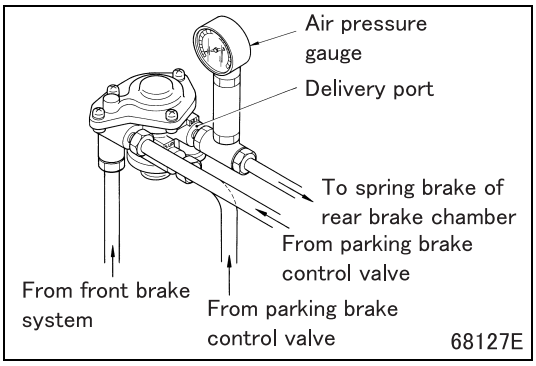

- Mount air pressure gauge on delivery port of the spring brake valve.
- Read air pressure gauge when the knob of the parking brake control valve is pushed to the RELEASE position.
  Specified value: 655 kPa {951 psi, 6.67 kgf/cm^2}

- Confirm that when the knob of the parking brake control valve is pulled out to the PARK position, the reading of air pressure gauge drops immediately to 0 kPa {0 psi, 0 kgf/cm^2}. If the air pressure gauge indicator needle drops slowly, replace check valve, since it is probably faulty.

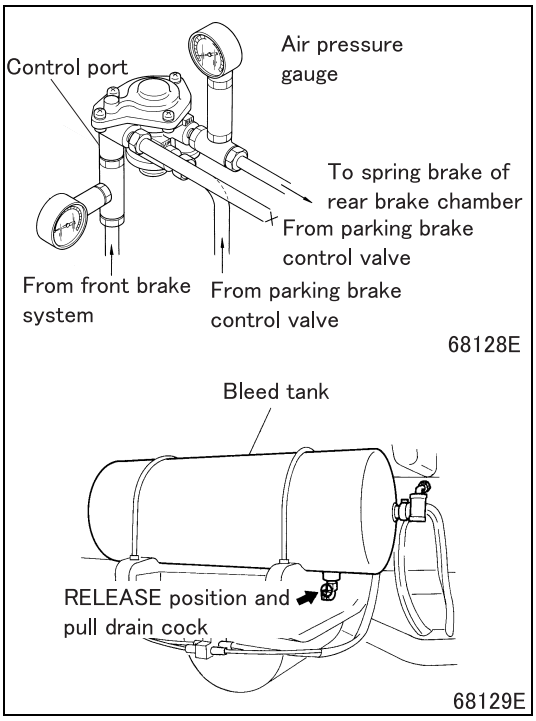

- Mount air pressure gauge on control port.
- Push in the knob of the parking brake control valve to the RELEASE position and pull drain cock to completely bleed tank of the rear brake system.

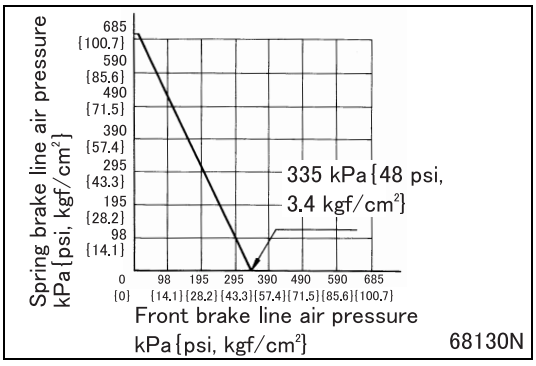

- Have the brake pedal depressed several times and read the drop in the air pressure on both air pressure gauges every time the brake is pressed to confirm that each value conforms to the specified value indicated on the performance curve diagram.
- Press the brake pedal several times to compress the air until rear brake chamber operates on the wheel parking brake locking the rear wheels completely.

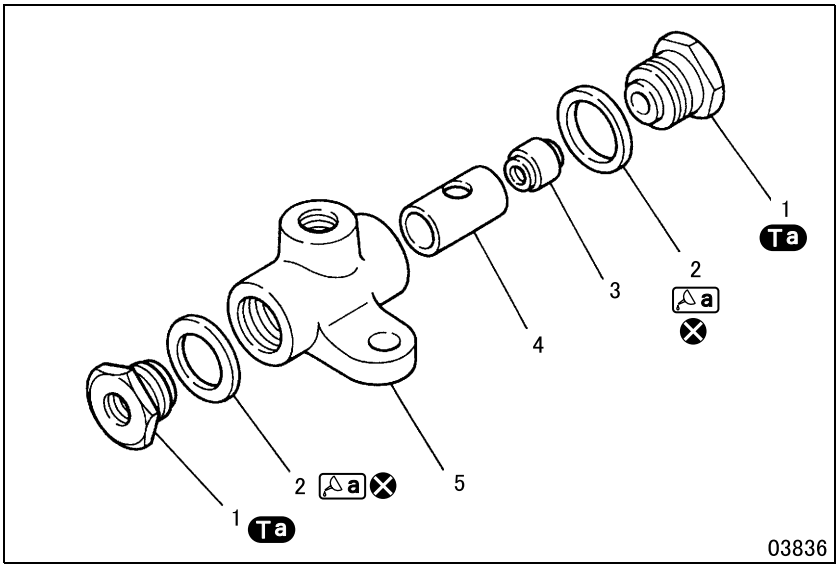

● **Disassembly sequence**

1 Joint
2 Packing
3 Check valve
4 Sleeve
5 Body

⊗: Non-reusable parts

● **Assembly sequence**

Follow the disassembly sequence in reverse.

Repair kit: Double check valve kit

Service standards

Location	Maintenance item	Standard value	Limit	Remedy
–	Air leakage (check pressure: 49 to 835 kPa {7.1 to 120 psi, 0.5 to 8.5 kgf/cm^2})	0 cm^3 {0 cu.in., 0 mL}	–	Replace

Tightening torque (Unit: N·m {ft.lbs, kgf·m})

Mark	Parts to be tightened	Tightening torque	Remarks
Ta	Joint	34 to 44 {25 to 32, 3.5 to 4.5}	–

Lubricant and/or sealant

Mark	Points of application	Specified lubricant and/or sealant	Quantity
a	Both sides of packing	ThreeBond 1101	As required

◆Inspection after installation◆

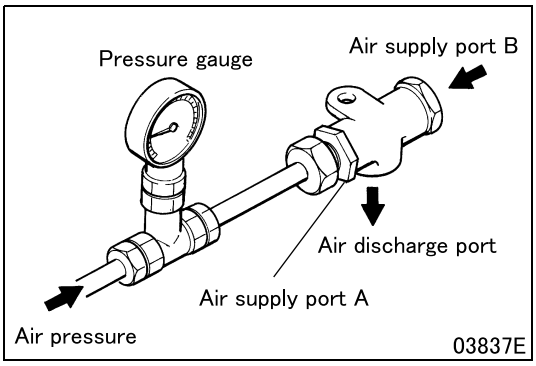

■ **Inspection: Double check valve**

- Apply the specified air pressure into the air supply port A. Air should come out the air discharge port and no air should come out from the air supply port B.
- Repeat this by applying air pressure into the air supply port B.

RELAY VALVE (WITH DOUBLE CHECK VALVE)

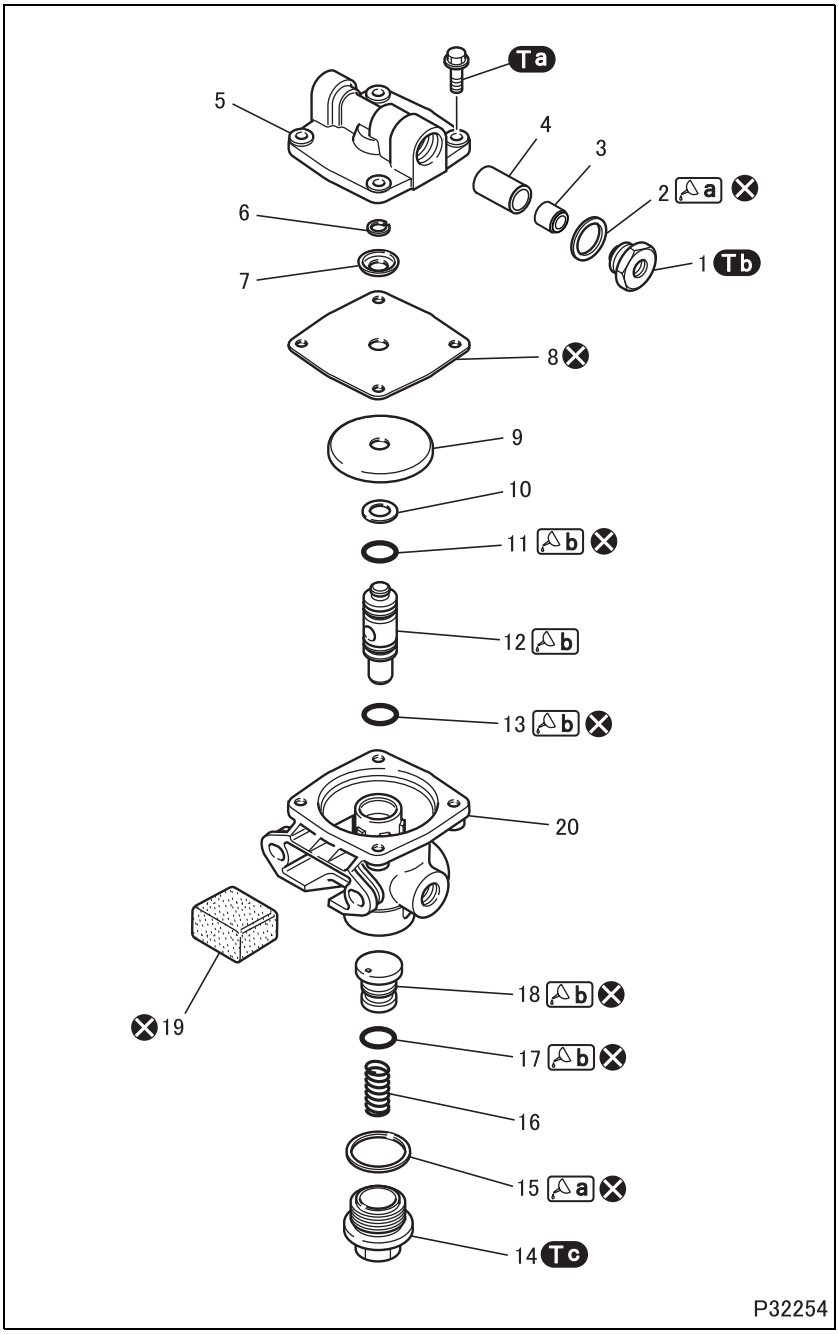

● **Disassembly sequence**

1 Connector
2 Packing
3 Check valve
4 Guide
5 Cover
6 C-clip
7 Diaphragm washer
8 Diaphragm
9 Diaphragm washer
10 Shim
11 O-ring
12 Exhaust valve
13 O-ring
14 Cap
15 Packing
16 Valve spring
17 O-ring
18 Valve
19 Filter
20 Body

⊗: Non-reusable parts

● **Assembly sequence**

Follow the disassembly sequence in reverse.

Repair kit: Relay valve kit

Service standards (Unit: mm {in.})

Location	Maintenance item	Standard value	Limit	Remedy
16	Valve spring load (installed length 30 {1.18})	59.3 N {13 lbs, 6.05 kgf}	55.4 N {12 lbs, 5.65 kgf}	Replace

Tightening torque (Unit: N·m {ft·lbs, kgf·m})

Mark	Parts to be tightened	Tightening torque	Remarks
Ta	Bolt (cover mounting)	11.8 to 14.7 {8.7 to 11, 1.2 to 1.5}	–
Tb	Connector	34.3 to 44.1 {25 to 33, 3.5 to 4.5}	–
Tc	Cap	58.8 to 78.5 {43 to 58, 6.0 to 8.0}	–

Lubricant and/or sealant

Mark	Points of application	Specified lubricant and/or sealant	Quantity
a	Packing	ThreeBond 1101	As required
b	O-ring	Silicone grease	As required
	Exhaust valve grease groove and exhaust valve surface that makes sliding contact with body		
	Valve grease groove and valve surface that makes sliding contact with cap		

◆Inspection after assembly◆

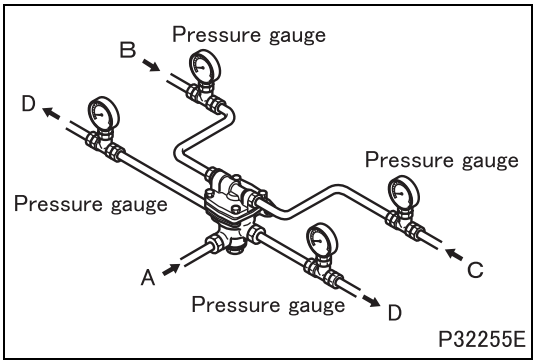

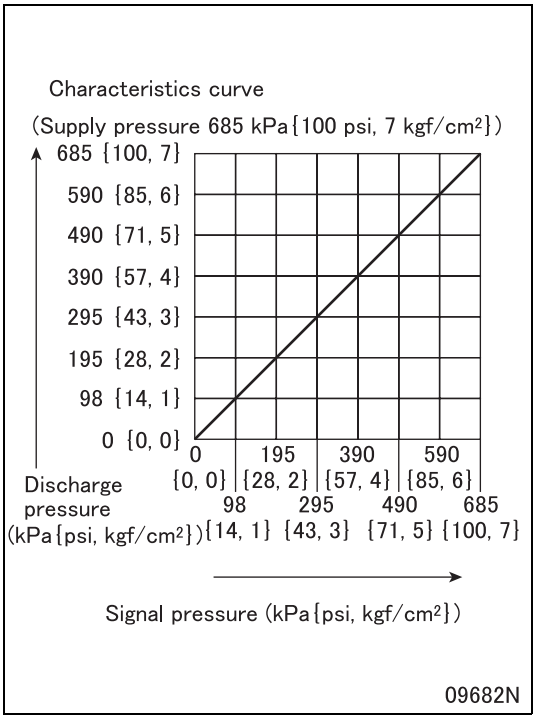

■ Inspection: Relay valve

- With air pressure of 685 kPa {7 kgf/cm^2} applied to the air supply port A, apply air pressure to the signal port B or C and check whether the discharge pressure from the discharge port D complies with the characteristic curve.
- If there is any abnormality, replace the piston spring and intake valve spring.

Group 37

Steering

Table of Contents

Back

Home

MITSUBISHI FUSO TRUCK OF AMERICA, Inc.

Pub.No.TWME0709-37

INDEX

SPECIFICATIONS 37-2

STRUCTURE AND OPERATION
1. Steering System 37-4
2. Fluid Flow 37-4
3. Power Steering Booster 37-5
4. Power Steering Oil Pump 37-7

TROUBLESHOOTING 37-10

ON-VEHICLE INSPECTION AND ADJUSTMENT
1. Change of Power Steering Fluid 37-14
2. Bleeding of Power Steering System 37-15
3. Performance Verification Test of Power Steering System 37-16
4. Steering Wheel Play 37-17
5. Steering Column Looseness 37-17
6. Inspection of Drag Link Ball Joint 37-17

STEERING COLUMN 37-18

POWER STEERING BOOSTER AND DRAG LINK 37-24

POWER STEERING OIL PUMP
<FK> 37-48
<FM> 37-52

POWER STEERING OIL TANK 37-58

SPECIFICATIONS

Steering wheel, steering shaft and power steering booster

Item		Specifications		
		FK61	FK62, FK65	FM
Steering wheel	Type	4-spoke type		
	Outer diameter mm {in.}	450 {17.7}		
Steering shaft	Type	Universal joint type (tilt and telescopic type)		
Power steering booster	Manufacturer	Unisia JKC Steering System		
	Type	Ball nut type		
	Form	Integral type		
	Gear ratio	17.1 to 20	18.0 to 19.9	22.4
	Cylinder diameter mm {in.}	85 {3.35}	90 {3.54}	100 {3.94}

Power steering oil pump

Item		Specifications		
		FK61	FK62, FK65	FM
Manufacturer		KYB		Unisia JKC Steering System
Type		Vane type		
Delivery rate	cm^3 {cu.in.}/rev.	13.6 {0.83}		17.5 {17.5}
Adjusted flow volume	dm^3 {qts}/min.	11 to 13 {12 to 14}		18 {19}
Adjusted pressure (relief valve)	MPa {psi, kgf/cm^2}	$13.7\ ^{+0.5}_{-0.2}$ {$1990\ ^{+71}_{-28}$, $140\ ^{+5}_{-2}$}	$12.3\ ^{+0.5}_{-0.2}$ {$1780\ ^{+71}_{-28}$, $125\ ^{+5}_{-2}$}	$13.7\ ^{0}_{-0.69}$ {$1990\ ^{0}_{-100}$, $140\ ^{0}_{-7}$}
Permissible revolutions	rpm	600 to 4500		600 to 4000

M E M O

1. Steering System

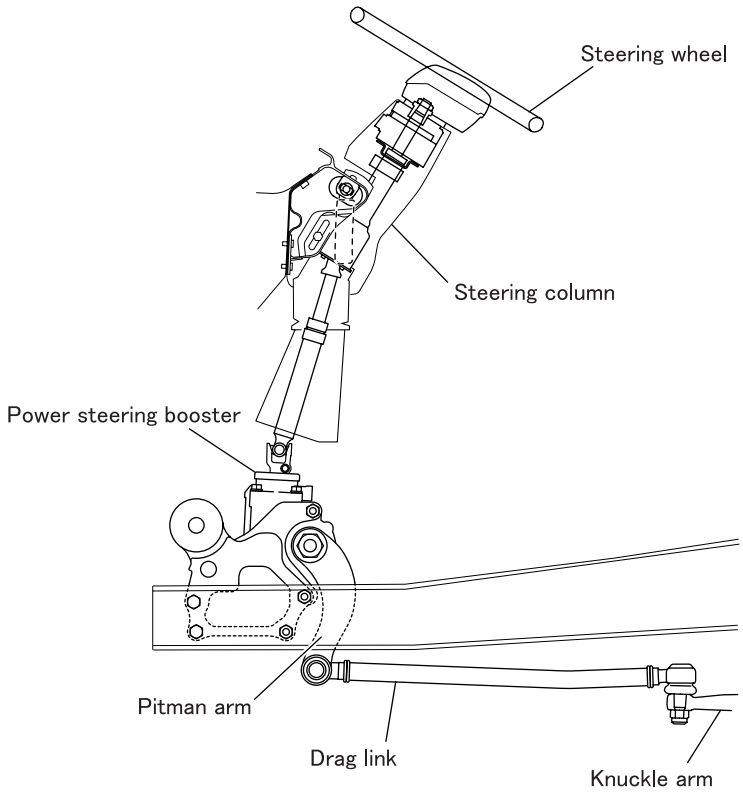

P101467E

2. Fluid Flow

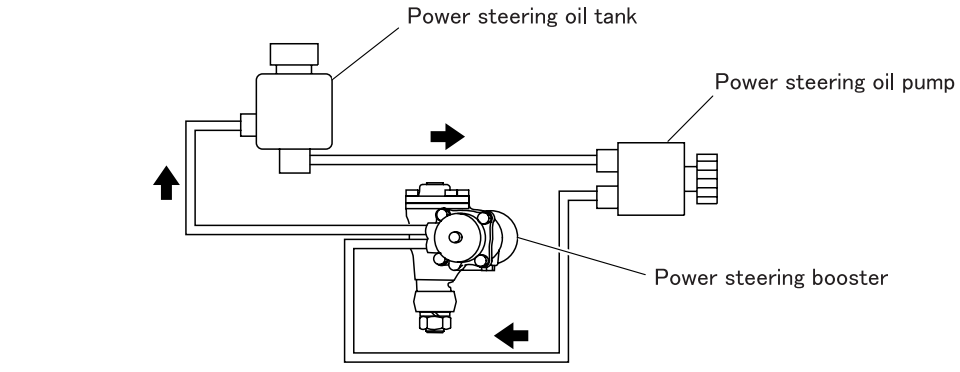

P57281E

3. Power Steering Booster

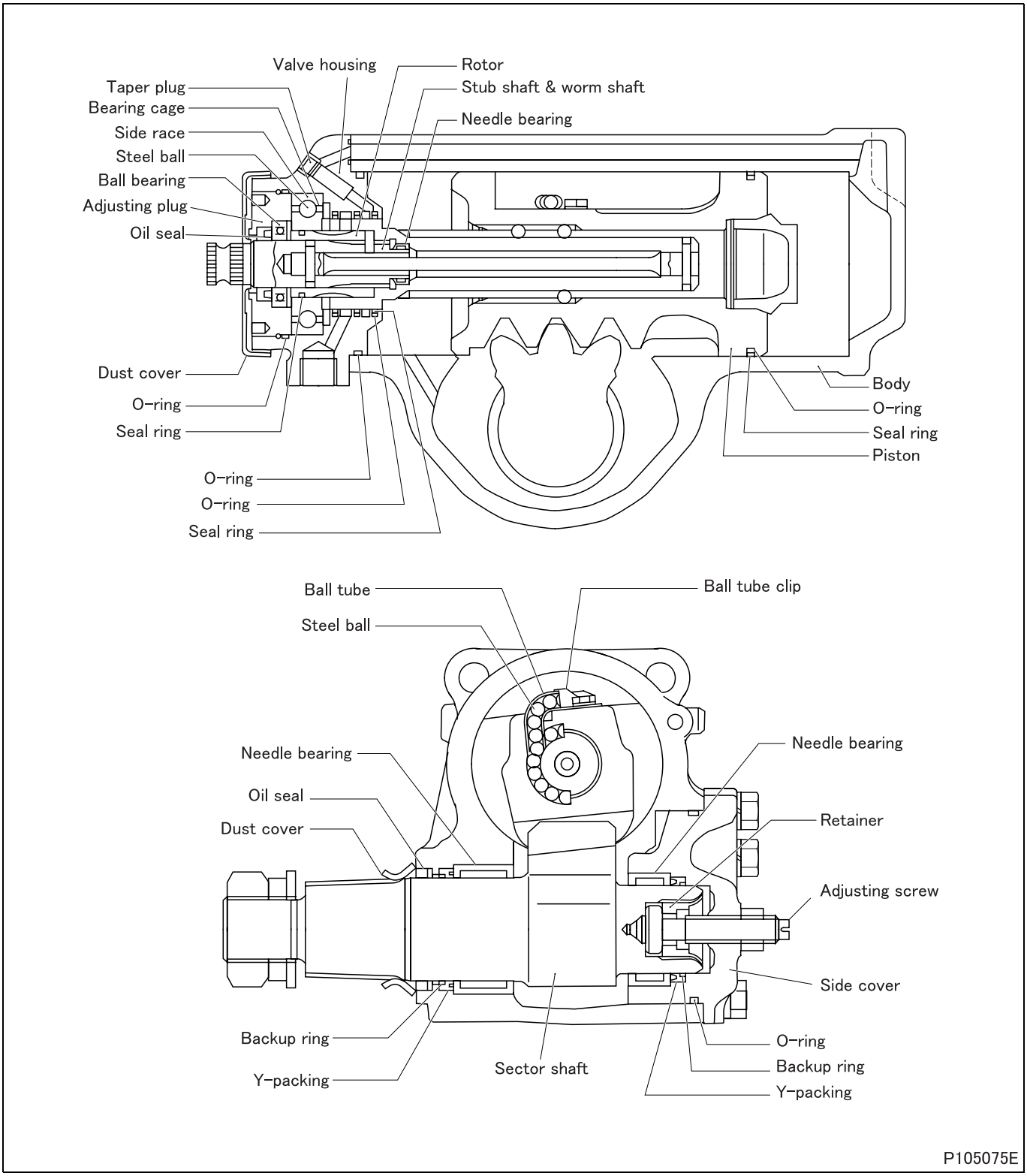

- A rotary valve is adopted for the valve, the center of the power steering. For steering reaction force and return of the valve, the valve operates lightly and smoothly at low speed by means of the torsion bar, and provides stable steering feel up to high speed.

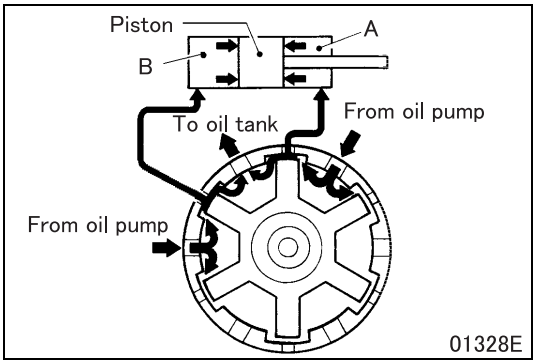

3.1 When moving straight forward

- As equal pressure is applied to cylinder chambers A and B on both sides of the piston, the piston is placed in neutral position.

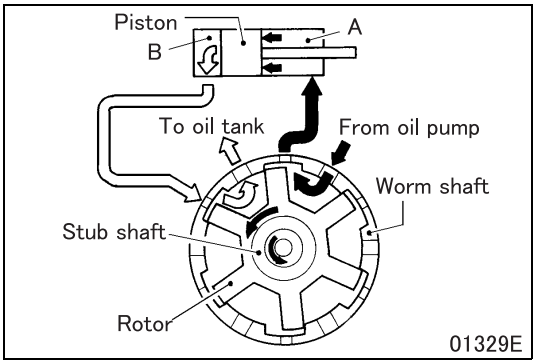

3.2 When turning the steering wheel

- When the steering wheel is turned, the stub shaft is twisted, which causes the rotor to shut off oil supply passages to cylinder chamber B. As a result, pressure difference is caused between cylinder chamber A and cylinder chamber B, and the piston moves, facilitating rotation of the worm shaft.
  The illustration shows a condition when the steering wheel is turned to the left.

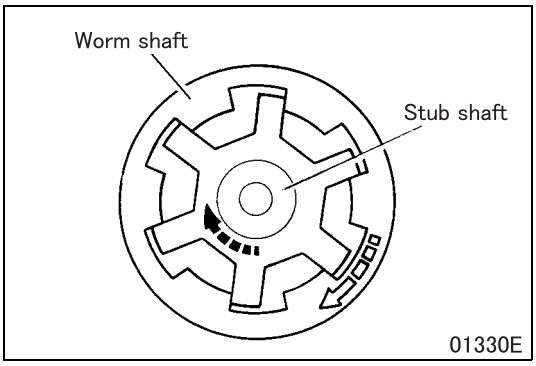

3.3 When hydraulic circuit fails

- The turning force of the stub shaft alone turns the worm shaft.

4. Power Steering Oil Pump

<FK>

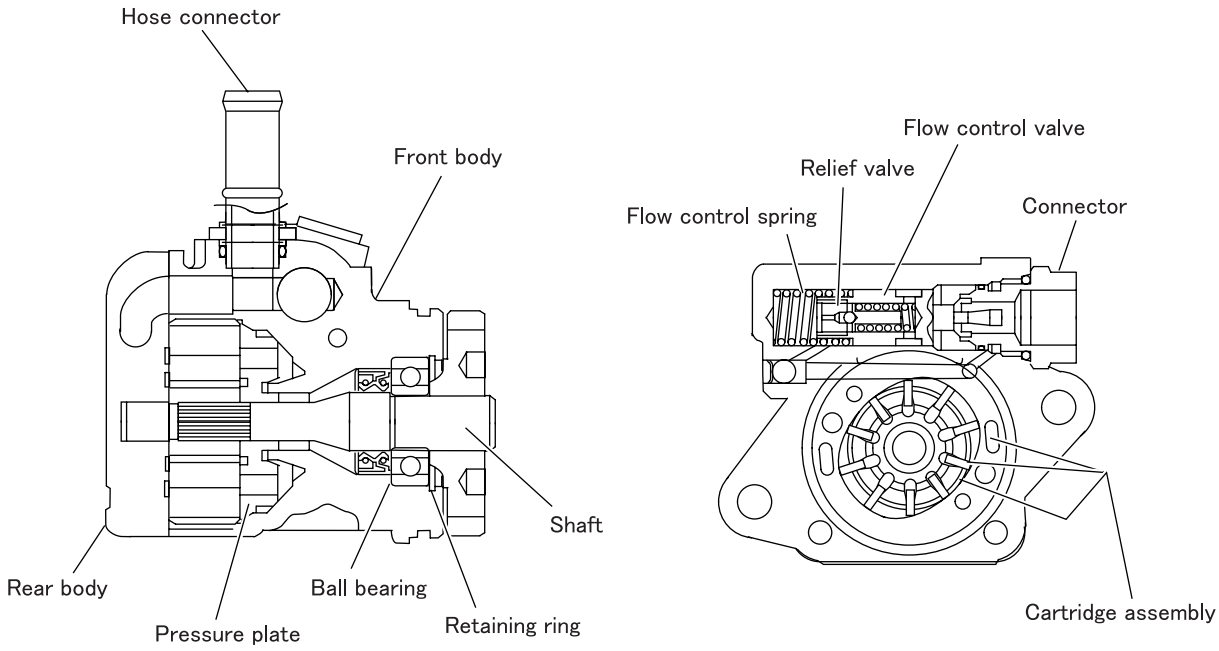

<FM>

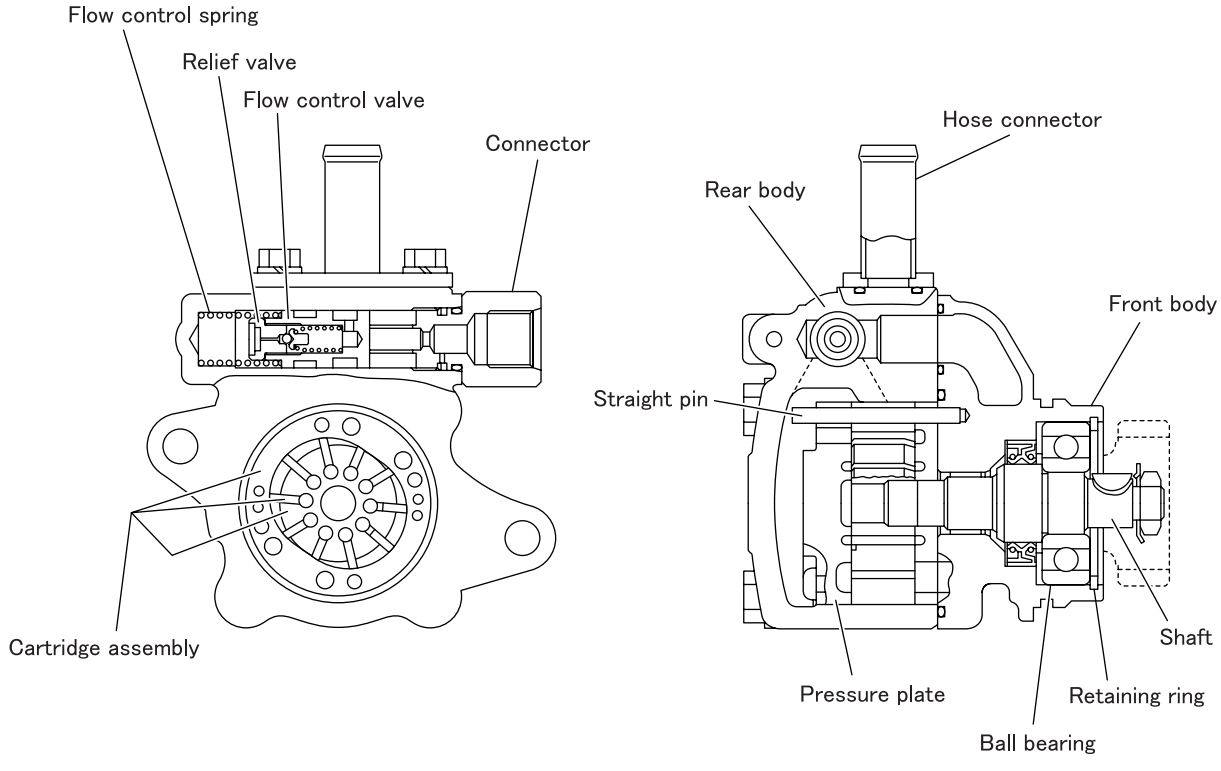

P105076E

4.1 Flow control valve

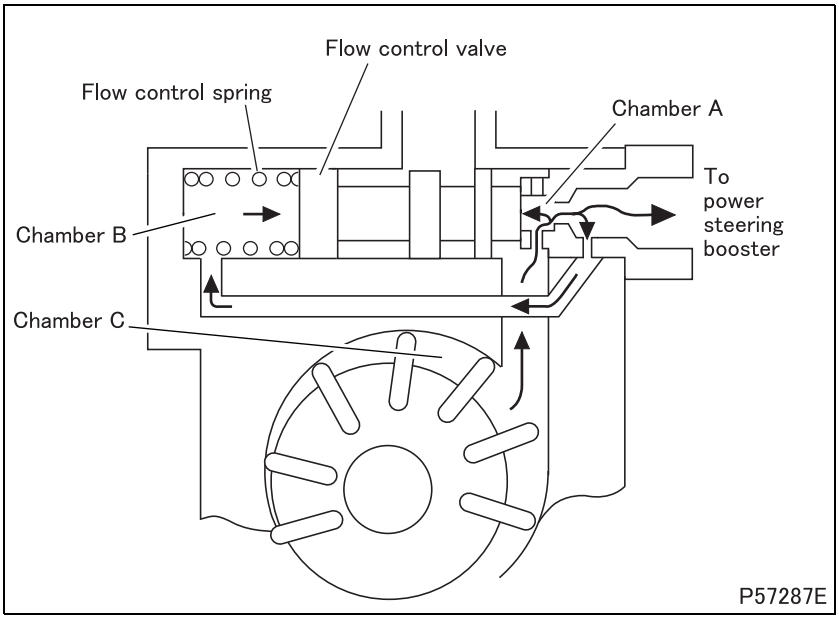

(1) Operation of flow control valve assembly

(1.1) When not functioning (oil pump in operation at low speed)

- Oil pressure in the chamber A is weaker than the combined force of oil pressure in the chamber B and tension of the flow control spring, and the flow control valve remains stationary.

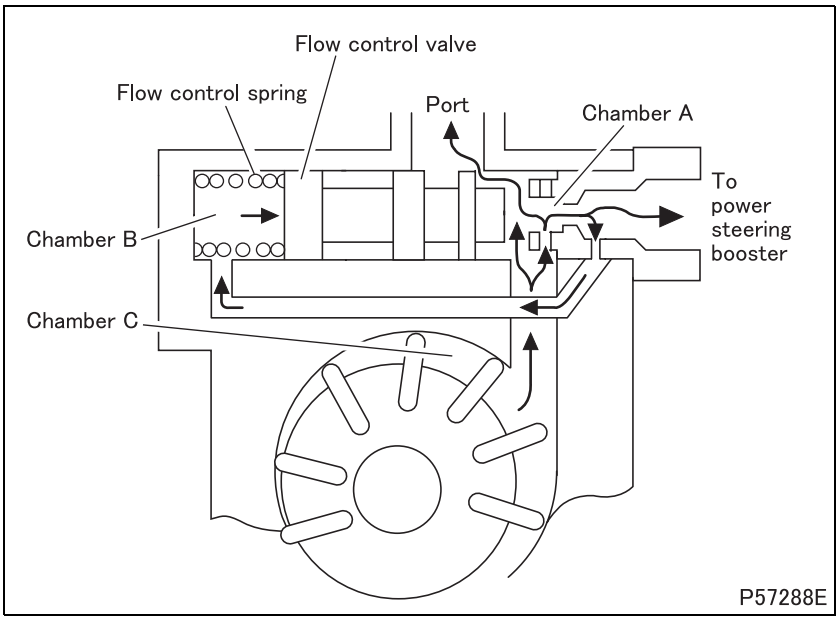

(1.2) When functioning (oil pump in operation at middle to high speeds)

- Oil pressure in the chamber A overcomes the combined force of oil pressure in the chamber B and tension of the flow control spring, and the flow control valve is shifted.
- Port is made open to release oil pressure, and the flow rate from the chamber A is maintained constant.

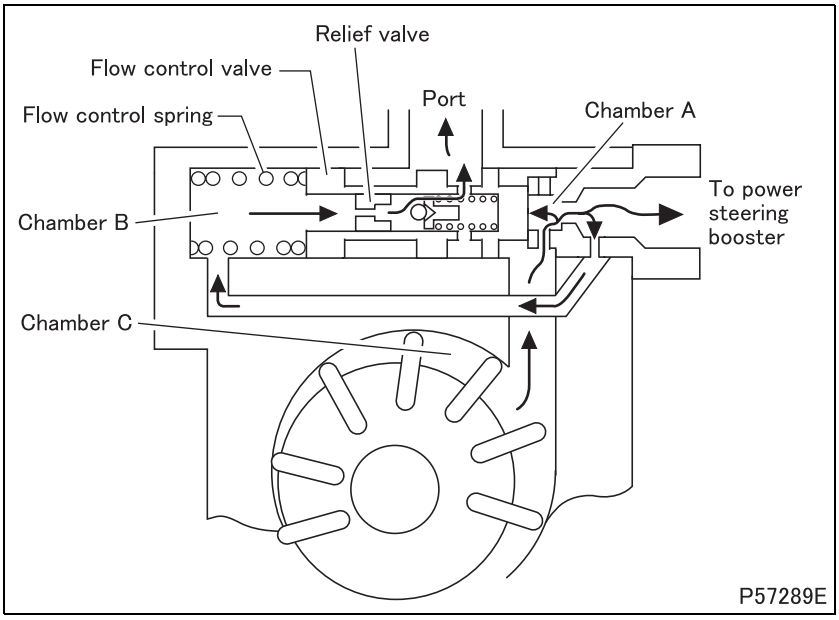

(2) Operation of relief valve

- When the combined force of oil pressure in the chamber B and tension of the flow control spring overcomes oil pressure in the chamber A, the flow control valve is shifted. Further increased oil pressure in the chamber B pushes the relief valve to open port, thus preventing excessive oil pressure from going to the chamber C.

Possible causes \ Symptoms		Steering wheel heavy to operate	Steering wheel play excessive and unstable	Steering wheel pulled to one side	Steering shimmy	Steering wheel return not smooth	Steering wheel does not turn	Steering angle not enough or different between right and left	Oil leakage	Oil pump oil pressure abnormal	Noise from oil pump (grinding)	Noise from oil pump (squeaking)	Noise from oil pump (low whirring)	Reference Gr
Faulty power steering mechanism	Thrust bearing damaged or worn	O			O	O								
	Ball and groove of ball screw worn	O	O		O									
	Air bleeding insufficient	O												
	Hydraulic fluid viscosity unsuitable	O												
	Power steering booster system faulty	O												
	Operation of flow control valve faulty	O												
	Rack and gear of ball screw unit worn		O											
	Bearing of sector shaft worn		O		O									
	Power steering booster mounting bolts and nuts loose		O											
	Play between ball screw unit and sector shaft unsuitable				O									
	Valve control edge damaged, or seal ring and O-ring for control broken				O									
	Hydraulic fluid in power steering system faulty				O									
	Adjustment of rack engagement turning torque faulty	O				O								
	Hydraulic circuit clogged	O				O								
	Sector shaft gear worn		O											
	Stub shaft serration damaged or worn		O											
	Power steering booster unit faulty			O	O									
	O-ring and oil seal faulty								O					
	Application of sealant faulty								O					
Faulty steering column and link mechanism	Universal joint abnormally worn or damaged, or poorly greased	O	O											
	Link deformed	O												
	Drag link ball stud loosened		O		O									
	Tie rod end ball stud loosened		O		O									
	Tie rod bent						O							
	Pitman arm mounting position incorrect							O						
	Right and left turning center of steering wheel displaced			O										

Possible causes \ Symptoms		Steering wheel heavy to operate	Steering wheel play excessive and unstable	Steering wheel pulled to one side	Steering shimmy	Steering wheel return not smooth	Steering wheel does not turn	Steering angle not enough or different between right and left	Oil leakage	Oil pump oil pressure abnormal	Noise from oil pump (grinding)	Noise from oil pump (squeaking)	Noise from oil pump (low whirring)	Reference Gr
Faulty front axle, etc	King pin poorly greased	O				O								
	Front wheel alignment (toe-in, camber and caster) incorrect	O		O	O	O								
	Thrust bearing damaged	O												
	Wheel hub bearing worn out or damaged		O	O	O									Gr26
	King pin or bushing worn out or damaged		O	O	O									
	Front axle deformed			O										
	Knuckle arm, tie rod arm, knuckle, etc. improperly tightened				O									
	Front spring U-bolt, nut, etc. loose				O									Gr33
	King pin bearing poorly greased	O				O								
	King pin bearing worn out or damaged		O	O	O									
	Front axle parts overtightened					O								Gr26
	Steering angle incorrectly adjusted						O	O						
	Mounted parts, connections loose		O											
	Knuckle stopper bolt improperly adjusted							O						
Faulty oil pump	Oil pump body faulty								O					
	O-ring, oil seal faulty								O					
	Bolt improperly tightened								O					
	Maximum generated oil pressure insufficient									O				
	Oil line crushed or clogged									O				
	Air caught in oil pump										O			
	Oil pump interior seized									O	O	O		
	Mounting bolt and nut loose												O	
	Pump body faulty												O	
	Valve malfunctioning									O				

Possible causes \ Symptoms		Steering wheel heavy to operate	Steering wheel play excessive and unstable	Steering wheel pulled to one side	Steering shimmy	Steering wheel return not smooth	Steering wheel does not turn	Steering angle not enough or different between right and left	Oil leakage	Oil pump oil pressure abnormal	Noise from oil pump (grinding)	Noise from oil pump (squeaking)	Noise from oil pump (low whirring)	Reference Gr
Other abnormalities	Load excessive forward of load-carrying platform	O												
	Load excessive rearward of load-carrying platform		O											
	Load excessive on one side of loading bed			O										
	Difference excessive in wheelbase between left and right			O										
	Propeller shaft runout excessive				O									Gr25
	Front axle bent				O									Gr26
	Rear axle housing bent			O										Gr27
	Final drive gear and final drive pinion damaged or improperly engaged				O									Gr27
	Tire pressure insufficient	O												Gr31
	Tire pressure excessive		O											
	Difference excessive in degree of wear between left and right tires			O										
	Left and right tires different in outer diameter			O										
	Front tire radial and lateral runout, static and dynamic balance incorrect				O									
	Braking force unbalanced			O										Gr35
	Oil leakage from oil tank due to filling beyond capacity								O					
	Oil leakage from oil tank due to air caught inside								O					

M E M O

ON-VEHICLE INSPECTION AND ADJUSTMENT

1. Change of Power Steering Fluid

Lubricant and/or sealant

Mark	Points of application	Specified lubricant and/or sealant	Quantity
–	Power steering oil tank	Automatic transmission fluid (DEXRON II or DEXRON III type)	Between MIN and MAX of power steering oil tank

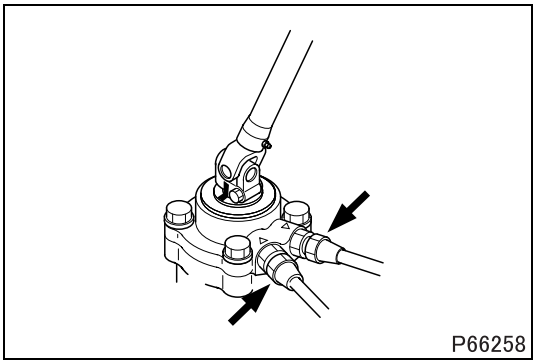

1.1 Draining

- Jack up the front wheels.
- Loosen feed and return pipes connected to the power steering booster.

CAUTION ⚠

- **When removing the feed pipe and return pipe, clean the port area to prevent ingress of dirt and dust.**

- Repeatedly turn the steering wheel fully left and right to drain the hydraulic fluid from the power steering booster, and then tighten the feed pipe and return pipe.

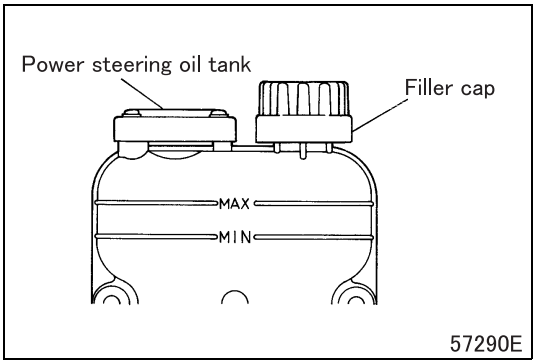

1.2 Filling

- Pour fluid into the power steering oil tank up to the bottom of the filler cap.
- Bleed the power steering system of air.

2. Bleeding of Power Steering System

Lubricant and/or sealant

Mark	Points of application	Specified lubricant and/or sealant	Quantity
–	Power steering oil tank	Automatic transmission fluid (DEXRON II or DEXRON III type)	Between MIN and MAX of power steering oil tank

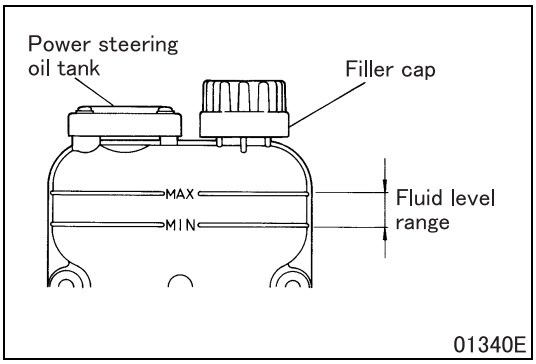

- Pour fluid to the power steering oil tank up to the bottom of the filler cap.
- With the engine stopped, jack up the front wheels.
- Repeatedly turn the steering wheel fully left and right. When the fluid level has dropped, add fluid enough to maintain the fluid level within the specified range.
- Start the engine to idle.
- When the fluid level has dropped, stop the engine and add fluid.
- Restart the engine. While checking for a drop in the fluid level, repeatedly replenish the hydraulic fluid until the fluid level is stabilized.

CAUTION ⚠

- **To avoid seizure of the power steering oil pump, do not keep the steering wheel turned fully to left or right for more than 15 seconds when the engine is running.**

- If there is any abnormal noise or a fluid level fluctuation, air should be still trapped in the power steering system. Turn the steering wheel several times to raise the fluid temperature to approximately 60 to 80°C {140 to 176°F}.
- Stop the engine and wait for approximately five minutes.
- Lower the front wheels and turn the steering wheel several times. If there is no noise or fluid level fluctuation, the bleeding of the power steering system is completed.
- When air bleeding is completed, check the fluid level in the oil tank, and pipe and hose connections for fluid leaks.

3. Performance Verification Test of Power Steering System

Service standards

Location	Maintenance item		Standard value	Limit	Remedy
–	Power steering system fluid pressure (with hands off steering wheel)		490 kPa {71 psi, 5 kgf/cm^2} or less	–	Repair*a
–	Relief set pressure (measure with stop valve tightened at engine idle)	FK61	$13.7^{+0.5}_{-0.2}$ MPa {1990^{+71}_{-28} psi, 140^{+5}_{-2} kgf/cm^2}	–	Replace
		Except FK61	$12.3^{+0.5}_{-0.2}$ MPa {1780^{+71}_{-28} psi, 125^{+5}_{-2} kgf/cm^2}		

*a: Check the power steering booster and hydraulic circuit for clogging.

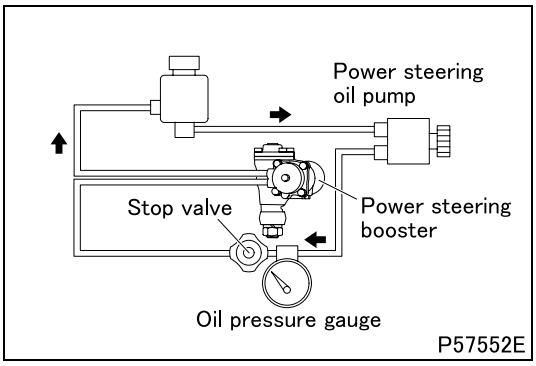

- Perform the tests with the following measuring conditions to verify normal operation of the power steering booster and power steering oil pump.
  - Install oil pressure gauge capable of measuring upward of 14.7 MPa {2130 psi, 150 kgf/cm^2} and stop valve between power steering oil pump and power steering booster, then bleed air.
  - Start engine to idle.
  - Turn steering wheel left and right several times to raise fluid temperature up to 50 to 60°C {122 to 140°F}.
  - With the engine idling, fully open stop valve.

CAUTION ⚠

- **To avoid seizure of the power steering oil pump, never close the stop valve for more than 15 seconds.**

Test item	Test procedure	Judging standard
Verification of smooth operation	• Jack up front wheels and turn steering wheel fully left and right.	Smooth operation throughout test
Measurement of fluid pressure in power steering system	• Measure fluid pressure with hands off steering wheel.	Must be at specified value or less
Measurement of relief set pressure	• Measure maximum fluid pressure with the stop valve tightened at engine idle. • Do not close stop valve for longer than 15 seconds.	Must not be out of specified value

4. Steering Wheel Play

Service standards (Unit: mm {in.})

Location	Maintenance item	Standard value	Limit	Remedy
–	Steering wheel play	10 to 40 {0.39 to 1.57}	–	Adjust

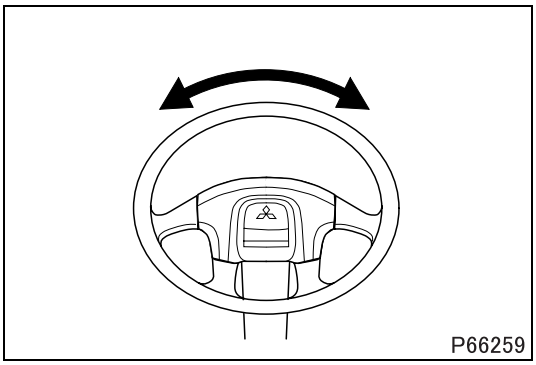

- With the vehicle placed straight forward, start the engine and gently turn the steering wheel right and left to measure its peripheral play.
- If the play deviates from the standard value, check tightening points and backlash of the power steering booster.

5. Steering Column Looseness

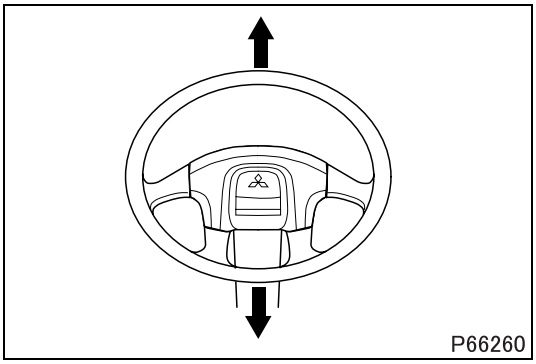

- Push and pull the steering wheel by hand to check the steering column for looseness.
- With the steering column tilted all the way forward, pull the steering wheel backward and check the steering column for looseness.
- If the steering column is loose, adjust the tilting and telescoping lever.

6. Inspection of Drag Link Ball Joint

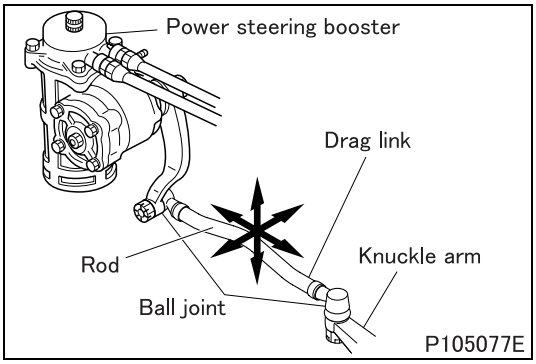

(1) Backlash

- With the vehicle in the stationary state, hold the rod of the drag link and move it in the forward, backward, vertical and lateral directions of the vehicle and check for play at the ball joints. Be sure to check the power steering booster and ball joints on both sides of the knuckle arm.
- If play is excessive, replace the drag link.

(2) Dust cover

- Check the dust cover for wear, cracks and other damage.
- If there is any abnormality, replace the dust cover.

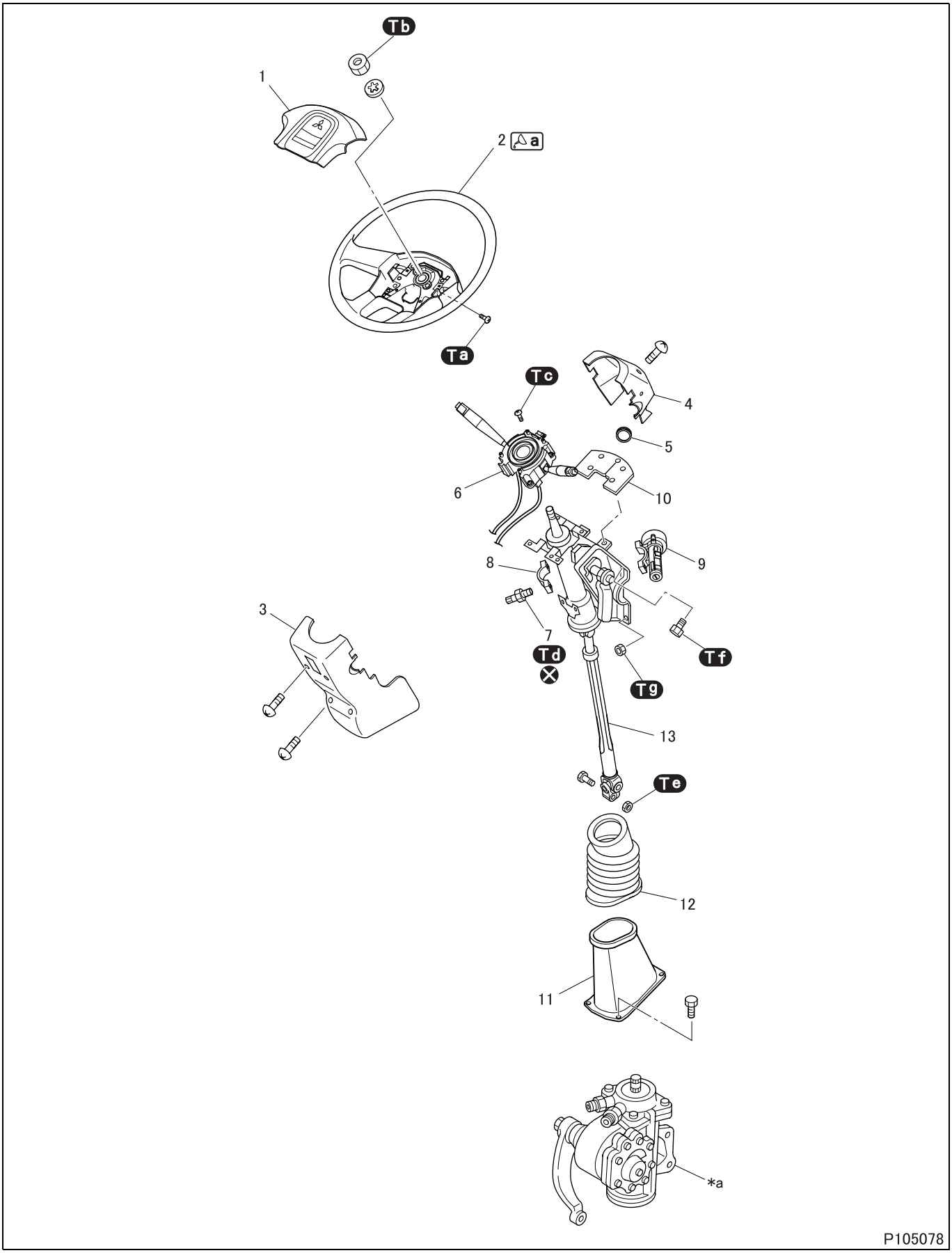
Tb
1
2 a
Ta
Tc
4
5
6
10
8
9
3
7
Td
Tf
Tg
13
Te
12
11
*a
P105078

● **Removal sequence**

1 Horn pad
2 Steering wheel
3 Shaft rear cover
4 Shaft front cover
5 Grommet
6 Combination switch
7 Twist-off bolt
8 Bracket
9 Starter switch
10 Harness cover
11 Support
12 Dust cover
13 Steering column (See later section.)

***a**: Power steering booster
⊗: Non-reusable parts

● **Installation sequence**

Follow the removal sequence in reverse.

Service standards (Unit: mm {in.})

Location	Maintenance item		Standard value	Limit	Remedy
13	Steering column	Play in joint rotation direction	15 or less	–	Replace
		Play in steering shaft axial direction	0.2 {0.0079} or less		

Tightening torque (Unit: N·m {ft.lbs, kgf·m})

Mark	Parts to be tightened	Tightening torque	Remarks
Ta	Bolt (horn pad mounting)	7.0 to 11 {5.2 to 8.1, 0.7 to 1.1}	–
Tb	Nut (steering wheel mounting)	68 to 78 {50 to 58, 6.9 to 8.0}	–
Tc	Screw (combination switch mounting)	2.5 ± 0.5 {1.8 ± 0.4, 0.3 ± 0.1}	–
Td	Twist-off bolt (starter switch mounting)	13 to 15 {9.6 to 11, 1.3 to 1.5}	–
Te	Nut (steering column and power steering booster mounting)	51.45 ± 2.45 {38 ± 1.8, 5.2 ± 0.2}	–
Tf	Bolt (steering column mounting)	17 to 26 {13 to 19, 1.7 to 2.7}	–
Tg	Nut (steering column mounting)	9 to 14 {6.6 to 10, 0.9 to 1.4}	–

Lubricant and/or sealant

Mark	Points of application	Specified lubricant and/or sealant	Quantity
△a	Horn contact ring on combination switch side	Wheel bearing grease [NLGI No. 2 (Li soap)]	As required

Special tools (Unit: mm)

Mark	Tool name and shape	Part No.	Application
⊂a	Steering wheel puller A: M10 × 1.25 B: M14 × 1.5 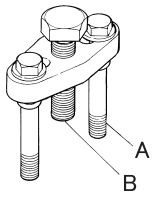 01344	MH062421	Removal of steering wheel

◆Work before removal◆

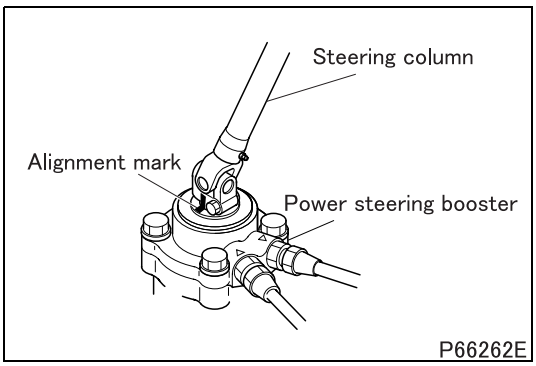

■ **Alignment mark: Steering column and power steering booster**

- Provide alignment marks on the steering column and power steering booster.

◆Removal procedure◆

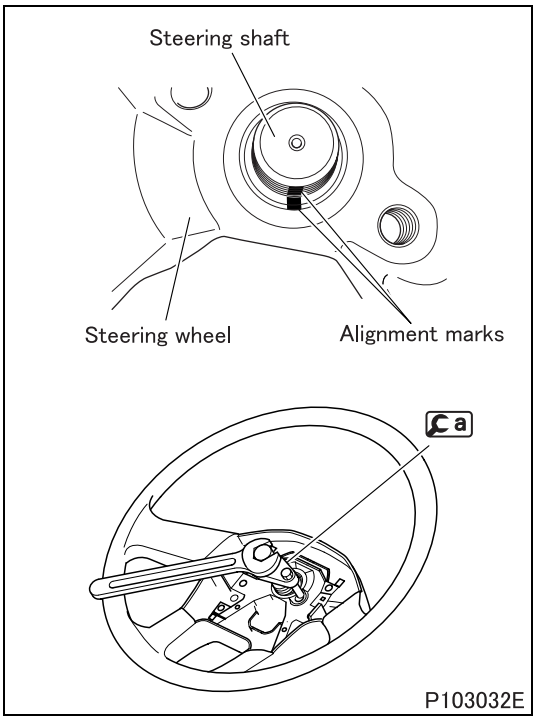

■ **Removal: Steering wheel**

- After removing the steering wheel mounting nut, be sure to put alignment marks on the steering wheel and steering shaft.

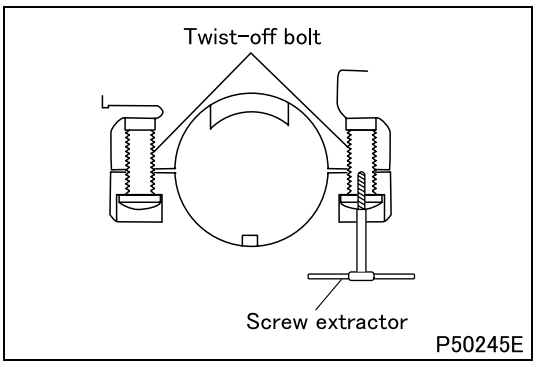

■ **Removal: Starter switch**

- Drill a hole of 5.5 to 6 mm {0.22 to 0.24 in.} in diameter to a depth of 10 to 15 mm {0.39 to 0.59 in.} in the twist-off bolt.
- Using the drilled hole, screw the screw extractor counterclockwise into the twist-off bolt and remove it.

◆Installation procedure◆

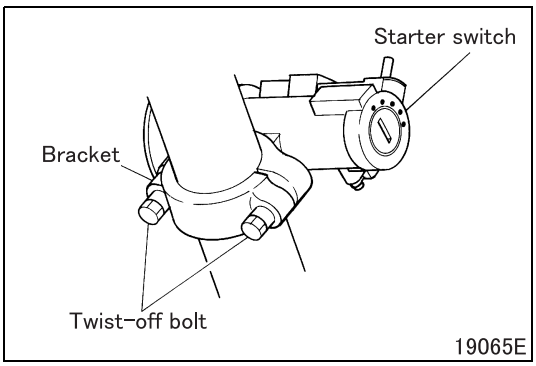

■ **Installation: Starter switch**

- Install the starter switch using new twist-off bolts.
- Twist off the bolt head of the twist-off bolt.
- Check for operation of the steering lock function of the starter switch.

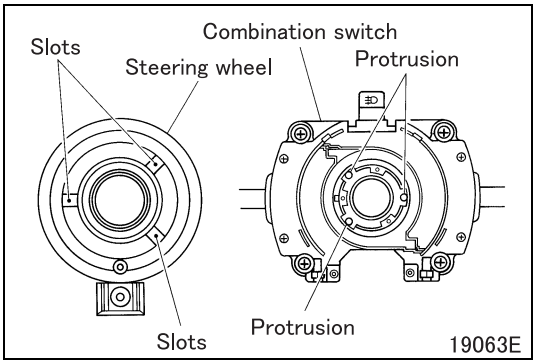

■ **Installation: Steering wheel**

- Align slots in steering wheel with cancel cam protrusions of combination switch.

◆Inspection after installation◆

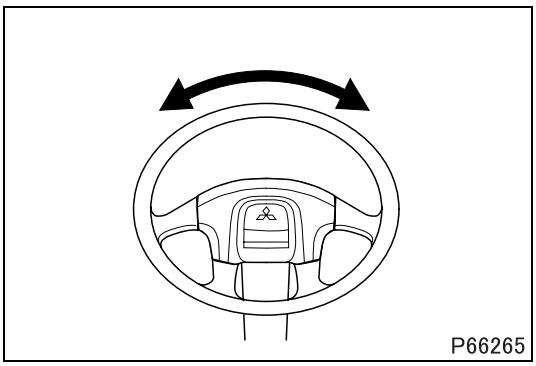

■ **Inspection: Noise from steering wheel**

- Lightly turn the steering wheel left and right and check for noise and other abnormalities.
- If any abnormality is found, disassemble the steering wheel, remove the cause and reinstall.

STEERING COLUMN

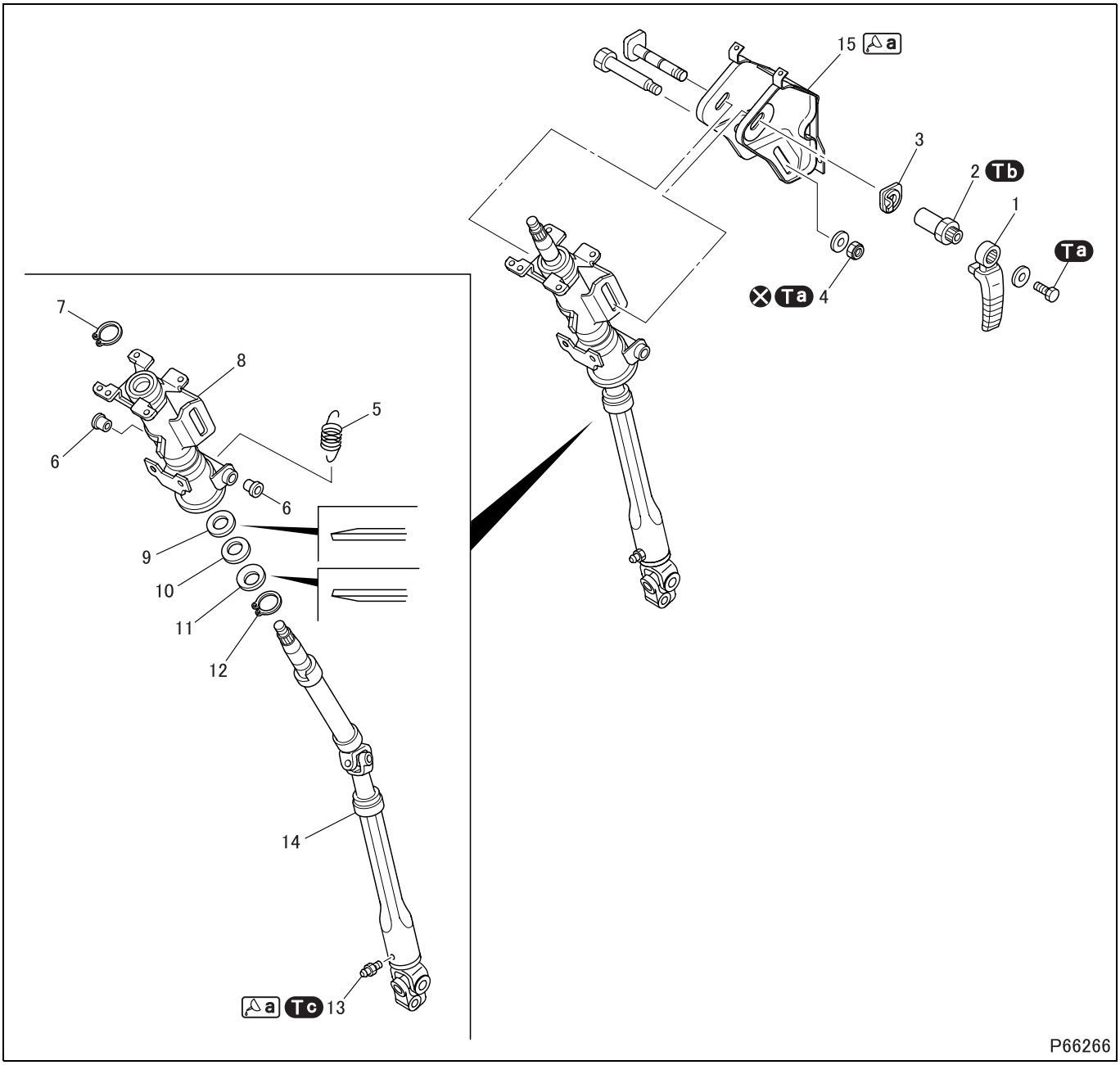

● **Disassembly sequence**

1 Lock lever
2 Nut
3 Washer and stopper set
4 Self-locking nut
5 Return spring
6 Bushing
7 Snap ring
8 Steering column
9 Stopper
10 Bearing spacer
11 Stopper
12 Snap ring
13 Grease nipple
14 Steering joint
15 Steering shaft bracket

⊗: Non-reusable parts

● **Assembly sequence**

Follow the disassembly sequence in reverse.

Tightening torque (Unit: N·m {ft.lbs, kgf·m})

Mark	Parts to be tightened	Tightening torque	Remarks
Ta	Bolt (lock lever mounting)	9 to 14 {6.6 to 10, 0.9 to 1.4}	–
	Self-locking nut (steering column mounting)		
Tb	Nut (steering column mounting)	29 ± 2 {21 ± 1.5, 3 ± 0.2}	–
Tc	Grease nipple	3 to 5 {2.2 to 3.7, 0.3 to 0.5}	–

Lubricant and/or sealant

Mark	Points of application	Specified lubricant and/or sealant	Quantity
a	Sliding surface of steering shaft bracket with steering column	Wheel bearing grease [NLGI No. 2 (Li soap)]	As required
	Grease through grease nipple		

◆Installation procedure◆

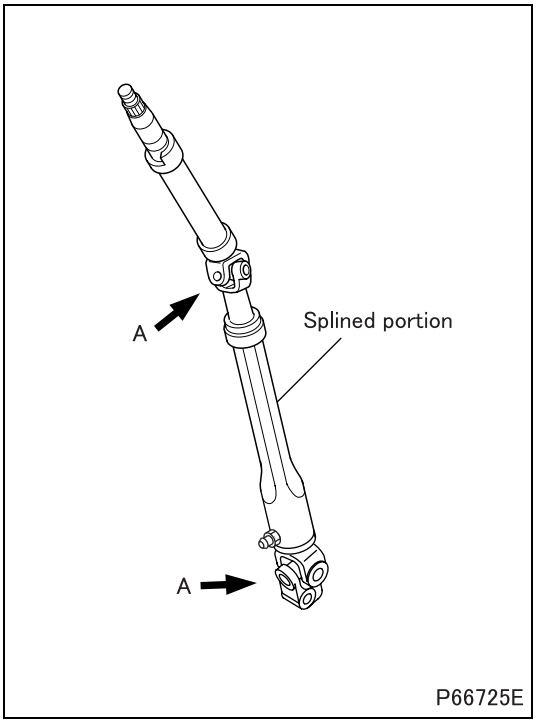

■ Installation: Steering joint

- When the steering joint has been separated at the splined portion, reconnect it so that the yokes of the upper and lower joints will face in the same direction (arrows A).

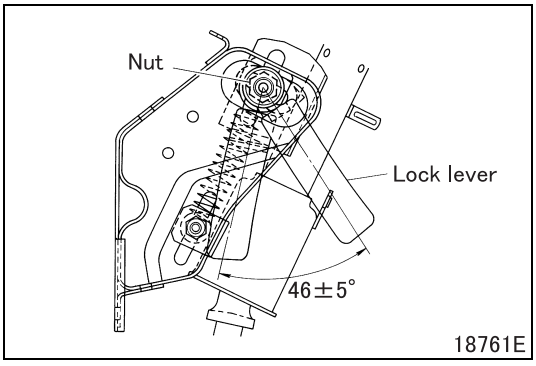

■ Installation: Lock lever

- Install the lock lever so that its operating range conforms to the angle indicated in the illustration.

POWER STEERING BOOSTER AND DRAG LINK

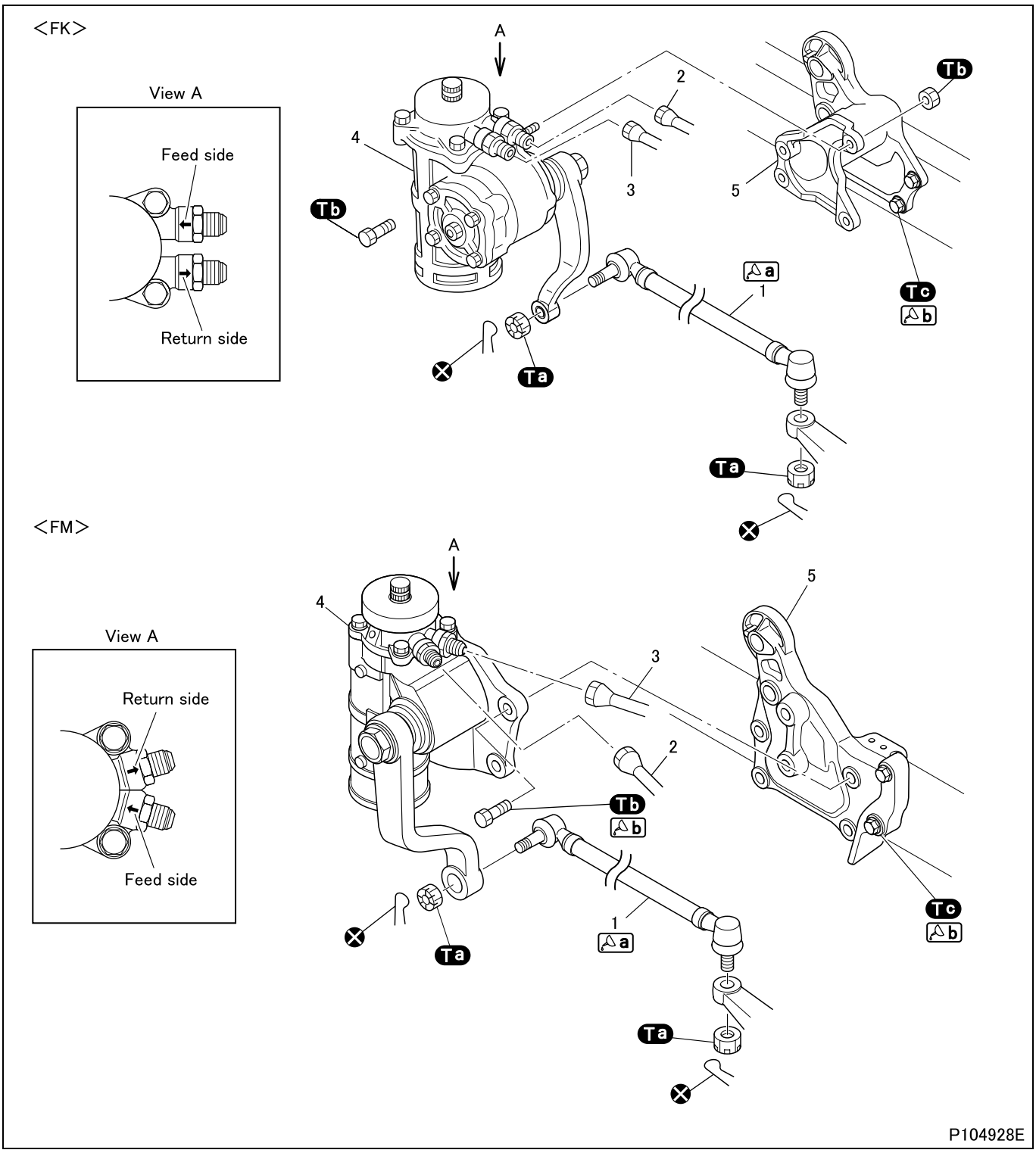

● **Removal sequence**

1 Drag link (See later section.)
2 Feed pipe
3 Return pipe
4 Power steering booster (See later section.)
5 Gear box bracket

CAUTION ⚠

- **When removing the drag link, use care not to deform or damage the dust cover.**
- **Do not attempt to disassemble the drag link because it is of a unit construction.**

● Installation sequence

Follow the removal sequence in reverse.

Tightening torque (Unit: N·m {ft.lbs, kgf·m})

Mark	Parts to be tightened		Tightening torque	Remarks
Ta	Nut (drag link mounting)	FK	190 ± 47.5 {140 ± 35, 19.4 ± 4.85}	–
		FM	353 ± 88 {260 ± 65, 36.0 ± 9.0}	
Tb	Bolt or nut (power steering booster mounting)	FK	150 to 200 {110 to 145, 15.0 to 20.0}	–
		FM	235 to 305 {175 to 225, 24 to 31}	Wet
Tc	Bolt or nut (gear box bracket mounting)	FK	240 to 290 {175 to 215, 24 to 29}	Wet
		FM	345 to 415 {255 to 305, 35 to 42}	

Lubricant and/or sealant

Mark	Points of application	Specified lubricant and/or sealant	Quantity
a	Lip area of drag link ball joint dust cover	Molybdenum disulfide grease [NLGI No. 2 (Li soap)]	As required
b	Bolt or nut thread	Chassis grease [NLGI No. 1 (Li soap)]	As required

Drag Link

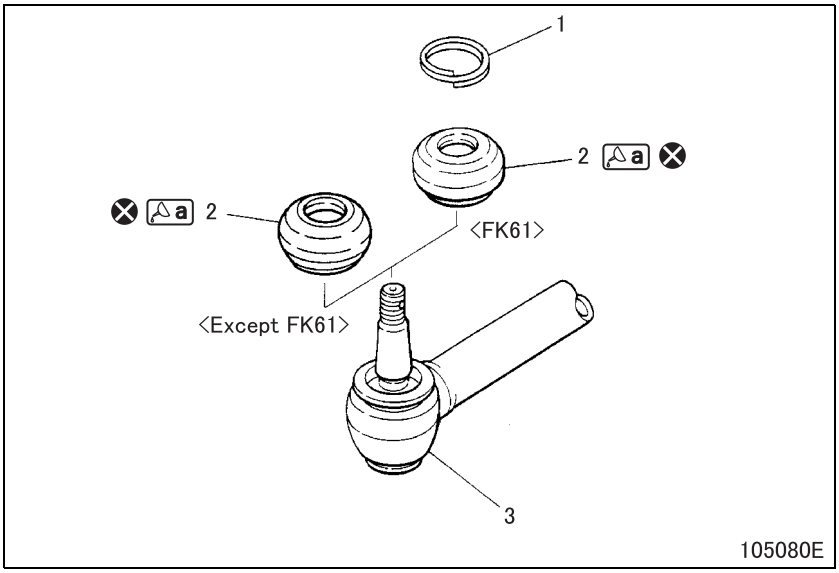

● **Disassembly sequence**

1 Clip <FK61>
2 Dust cover
3 Drag link

⊗: Non-reusable parts

CAUTION ⚠

- **Do not attempt to disassemble the drag link because it is of a unit construction.**

- Do not remove the dust cover unless it is in an abnormal condition.

● **Assembly sequence**

Follow the disassembly sequence in reverse.

Service standards (Unit: mm {in.})

Location	Maintenance item				Standard value	Limit	Remedy
3	Drag link ball joint	Play	Under load of ±2000 N {±450 lbs, ±204 kgf} <FK61>		0 to 0.2 {0 to 0.0079}	–	Replace
			Under load of 430 N {97 lbs, 44 kgf} <FK62, FK65>		–	0.7 {0.028}	
			Under load of 500 N {110 lbs, 51 kgf} <FM>				
		Turning torque		FK61	0.5 to 8 N·m {0.4 to 5.9 ft.lbs, 0.05 to 0.82 kgf·m}	–	Replace
				Except FK61	0.5 to 12 N·m {0.4 to 8.9 ft.lbs, 0.05 to 1.2 kgf·m}		

Lubricant and/or sealant

Mark	Points of application		Specified lubricant and/or sealant	Quantity
a	Lip area of dust cover		Molybdenum disulfide grease [NLGI No. 2 (Li soap)]	As required
	Inside of dust cover	FK61		11g {0.39 oz}
		FK62, FK65		13 to 14g {0.46 to 0.49 oz}
		FM		19 to 20g {0.67 to 0.71 oz}

Special tools (Unit: mm {in.})

<table>
<tr><th>Mark</th><th>Tool name and shape</th><th>Part No.</th><th>Application</th></tr>
<tr><td>a</td><td>Clip guide
<table><tr><th>A</th><th>B</th></tr><tr><td>ϕ53
{2.09}</td><td>ϕ56
{2.20}</td></tr></table> 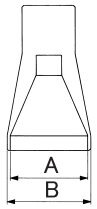
01443</td><td><FK61>
MH061831</td><td>Installation of clip</td></tr>
<tr><td>b</td><td>Dust cover installer
 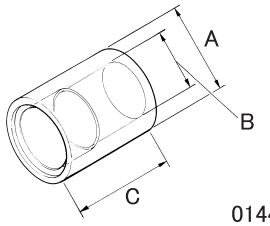
01444
<table><tr><th></th><th>A</th><th>B</th><th>C</th></tr><tr><td>FK62, FK65</td><td>ϕ65
{2.56}</td><td>ϕ56
{2.20}</td><td>100
{3.94}</td></tr><tr><td>FM</td><td>ϕ65
{2.56}</td><td>ϕ51
{2.01}</td><td>100
{3.94}</td></tr></table></td><td><FK62, FK65>
MH062804
<FM>
MH061827</td><td rowspan="2">Installation of dust cover</td></tr>
<tr><td>c</td><td>End holder
 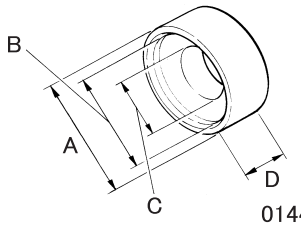
01445
<table><tr><th></th><th>A</th><th>B</th><th>C</th><th>D</th></tr><tr><td>FK62, FK65</td><td>ϕ60
{2.36}</td><td>ϕ50.5
{1.99}</td><td rowspan="2">ϕ35
{1.38}</td><td rowspan="2">25
{0.98}</td></tr><tr><td>FM65</td><td>ϕ64
{2.52}</td><td>ϕ55.7
{2.19}</td></tr></table></td><td><FK62, FK65>
MH061830
<FM>
MH061829</td></tr>
</table>

◆Removal procedure◆

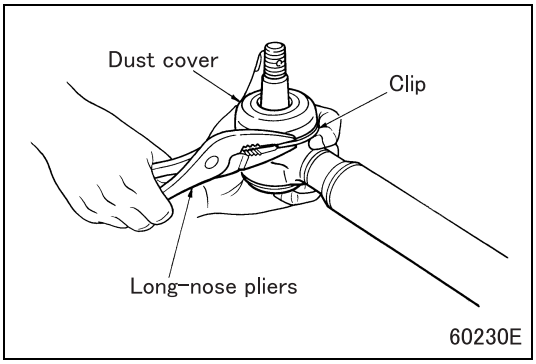

60230E

■ **Removal: Clip**

CAUTION ⚠

- **When removing the clip, take care not to deform or damage the clip and dust cover.**
- **Do not reuse the removed clip if it is deformed.**

◆Inspection procedure◆

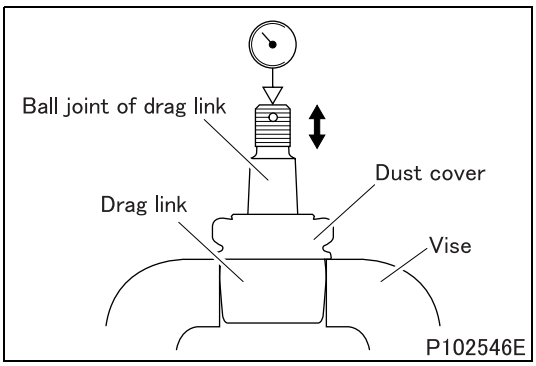

■ **Inspection: Drag link**

(1) Play

<FK61>

- Fix the drag link with a vise.

CAUTION ⚠

- **Take care not to deform or damage the dust cover when fixing it with a vise.**

- The position of the ball joint with applying no load is adjusted to standard position.
- Measure each play of the ball joint with applying the specified push and pull load from the standard position.
- Total each play and if the total deviates from standard value, replace the tie rod end.

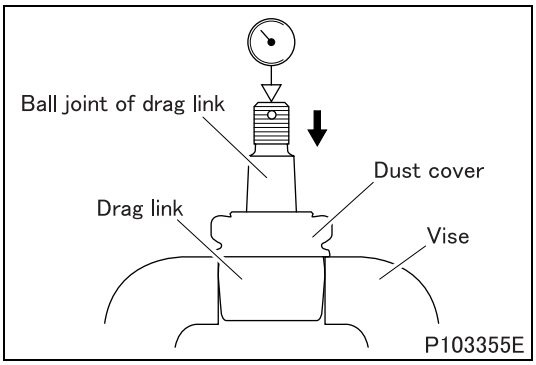

<Except FK61>

- Fix the drag link with a vise.

CAUTION ⚠

- **Take care not to deform or damage the dust cover when fixing it with a vise.**

- If measured value deviates from the standard value with applying the specified load (push) to the ball joint, replace the drag link.

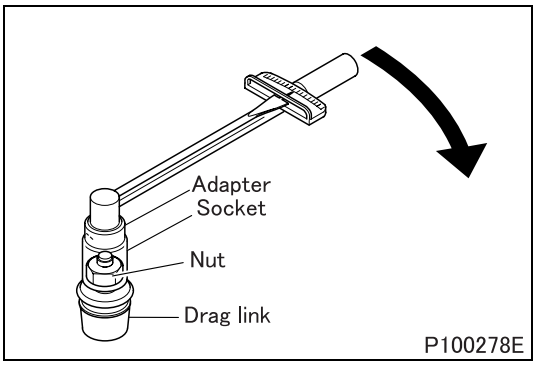

(2) Rotation torque

- Install the drag link mounting nut on the drag link.
- Install the socket, adapter and torque wrench to measure the rotation torque.
- If the measured value deviates from the standard value, replace the drag link.

(3) Dust cover

- Check that there are no wear, cracks or damage. There abnormalities can cause water to enter the ball joint, resulting in premature wear.
- If wear, crack, or damage is present, inspect traces of water entry and occurrence of rust in the ball joint. If any abnormality is found, replace the drag link. If no abnormality is found, replace the dust cover and reapply grease.

◆Installation procedure◆

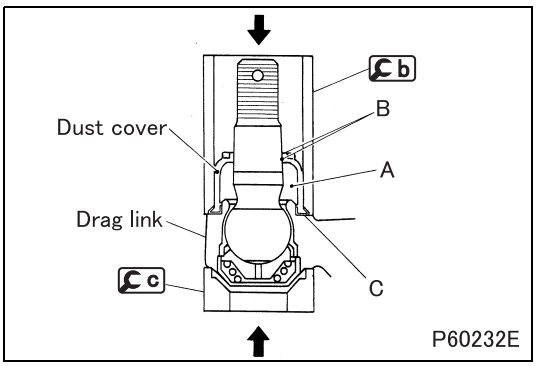

■ **Installation: Dust cover <Except FK61>**

- Fill inside A with grease and apply grease to lip B of the dust cover.
- Pinch the dust cover with b and c and install reinforced collar C using a vise so that it is in close contact with the drag link.

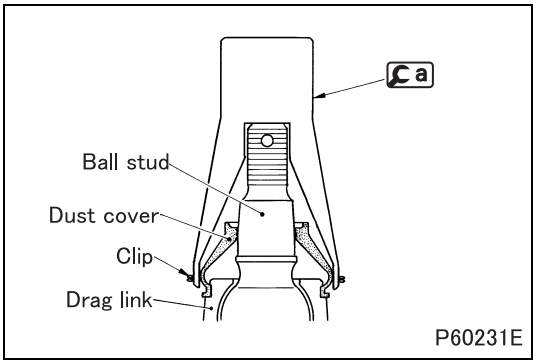

■ **Installation: Clip**

- Set the ball stud so that it is vertical.
- Put a on the drag link.
- Install the clip in the dust cover groove.

CAUTION ⚠

- **Take care not to allow the tip of a to be caught in the dust cover.**
- **Install the clip carefully so as not to damage the dust cover with the tip of the clip.**

POWER STEERING BOOSTER AND DRAG LINK

Power Steering Booster
<FK>

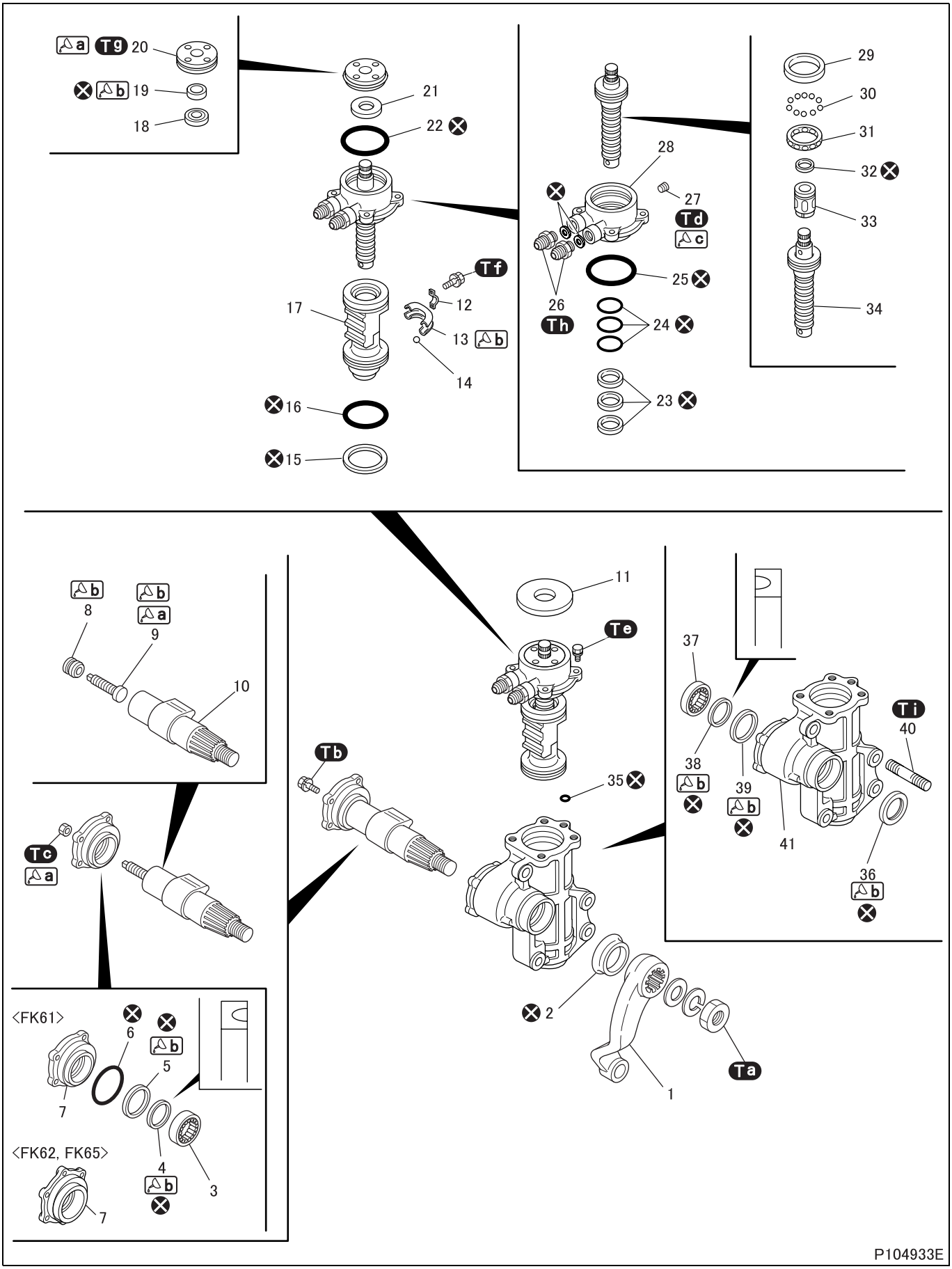

P104933E

<FM>

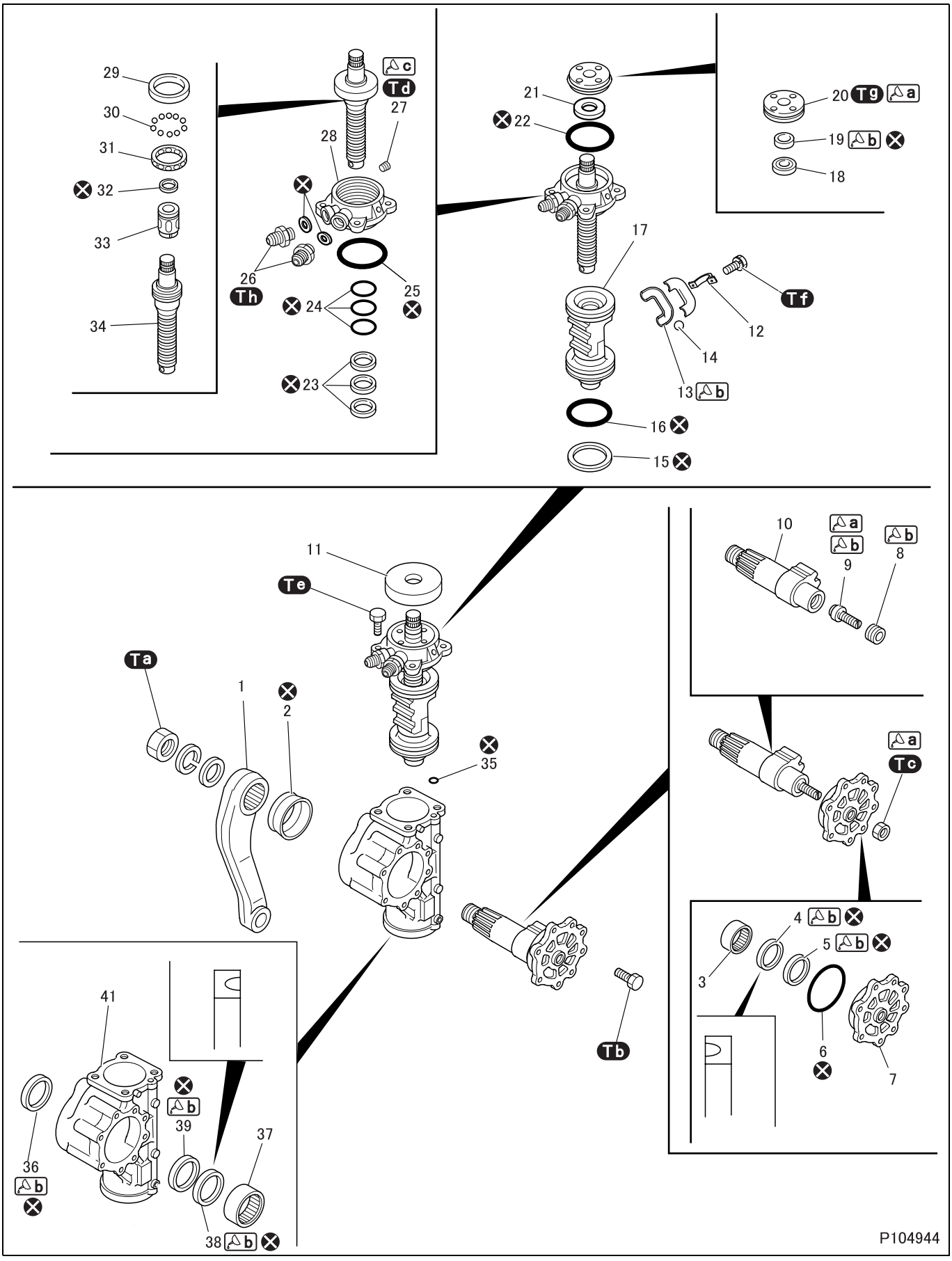
29
30
31
32
33
34
c
Td
27
28
26
Th
24
25
23
21
22
20 T9 a
19 b
18
17
Tf
12
14
13 b
16
15
11
Te
Ta
1
2
35
10
a
b
b
8
9
a
Tc
4 b
5 b
3
6
7
Tb
41
b
39
37
36 b
38 b
P104944

POWER STEERING BOOSTER AND DRAG LINK

● Disassembly sequence

1 Pitman arm
2 Dust cover
★ **3** Needle bearing
4 Y-packing
5 Backup ring
6 O-ring
7 Side cover
★ **8** Retainer
★ **9** Adjusting screw
10 Sector shaft
11 Dust cover
12 Ball tube clip
13 Ball tube
14 Steel ball
15 Seal ring
16 O-ring
17 Piston
18 Ball bearing
19 Oil seal
20 Adjusting plug
21 Wave washer
22 O-ring
23 Seal ring
24 O-ring
25 O-ring
26 Connector
27 Plug
28 Valve housing
29 Side race
30 Steel ball
31 Bearing cage
32 Seal ring
33 Rotor
34 Stub shaft and worm shaft
35 O-ring
36 Oil seal
★ **37** Needle bearing
38 Y-packing
39 Backup ring
40 Stud bolt <FK>
41 Body

⊗: Non-reusable parts

CAUTION ⚠

- **Do not remove the parts marked with ★ unless defects are evident.**
- **Prepare a receiver when disassembling the parts that contain steel balls.**

● Assembly sequence

Follow the disassembly sequence in reverse except for the following.
3→11→2

Repair kit: Power steering booster kit

Service standards (Unit: mm {in.})

Location	Maintenance item			Standard value	Limit	Remedy
–	Backlash between sector shaft and piston (measure at tip of pitman arm)		FK61	0.05 to 0.25 {0.0020 to 0.0098}	0.5 {0.020}	Adjust
			FK62, FK65	0.05 to 0.25 {0.0020 to 0.0098}		
			FM	0.10 to 0.50 {0.0039 to 0.020}	–	
9, 10	Looseness in adjusting screw and sector shaft			0.01 to 0.10 {0.00039 to 0.0039}	0.2 {0.0079}	Replace
10	Sector shaft outside diameter	Adjusting screw side	FK61	ϕ39.975 {1.573}	ϕ39.875 {1.569}	Replace
			FK62, FK65	ϕ47.975 {1.89}	ϕ47.875 {1.88}	
			FM	ϕ47.975 {1.89}	ϕ47.875 {1.88}	
		Pitman arm side	FK61	ϕ44.975 {1.77}	ϕ44.875 {1.766}	
			FK62, FK65	ϕ47.975 {1.89}	ϕ47.875 {1.88}	
			FM	ϕ57.975 {2.282}	ϕ57.875 {2.278}	
17, 34	Looseness in piston and stub shaft and worm shaft in radial direction			–	0.5 {0.020}	Replace
17, 41	Piston outside diameter-to-body inside diameter clearance			0.11 {0.0043}	0.16 {0.0063}	Replace

Tightening torque (Unit: N·m {ft.lbs, kgf·m})

Mark	Parts to be tightened		Tightening torque	Remarks
Ta	Lock nut (pitman arm mounting)	FK61	245 to 295 {180 to 215, 25 to 30}	–
		FK62, FK65	315 to 365 {230 to 270, 32 to 37}	
		FM	392 to 442 {290 to 325, 40 to 45}	
Tb	Bolt (sector shaft mounting)	FK61, FM	73.6 to 83.4 {54 to 62, 7.5 to 8.5}	–
		FK62, FK65	49.1 to 53.9 {36 to 40, 5 to 5.5}	
Tc	Nut (adjusting screw tightening)	FK61	63.7 to 73.5 {47 to 54, 6.5 to 7.5}	–
		Except FK61	117.7 to 127.5 {87 to 94, 12 to 13}	
Td	Plug (body, valve housing)		8.9 to 12.7 {6.5 to 9.4, 0.9 to 1.3}	Sealant
Te	Bolt (valve housing tightening)	FK	98.1 to 107.9 {72 to 80, 10 to 11}	–
		FM	117.7 to 127.5 {87 to 94, 12 to 13}	
Tf	Screw (ball tube clip mounting)		4.41 to 5.39 {3.3 to 4.0, 0.4 to 0.5}	–
Tg	Adjusting plug	FK61	177 to 195 {130 to 145, 18 to 20}	–
		Except FK61	226 to 245 {165 to 180, 23 to 25}	
Th	Connector	FK61, FM	66.7 ± 12.8 {49 ± 9.4, 6.8 ± 1.3}	–
		FK62, FK65	108 to 127 {80 to 94, 11 to 13}	
Ti	Stud bolt mounting	FK62, FK65	25 to 69 {18 to 51, 2.5 to 7.0}	–

Lubricant and/or sealant

Mark	Points of application	Specified lubricant and/or sealant	Quantity
a	Mating surfaces of nut and side cover	Hermeseal 101Y or ThreeBond 1102	As required
	Adjusting screw thread		
	Outer surfaces of adjusting plug		
b	Inner surfaces of backup ring	Multipurpose grease [NLGI No. 2 (Li soap)]	As required
	Fill in inner surfaces of Y-packing		
	Fill in inner surfaces of retainer		
	Fill in mating surfaces with sector shaft of adjusting screw		
	Fill inside ball tube		
	Fill in inner surfaces of oil seal		
c	Wind around plug thread	Seal tape	As required

Special tools (Unit: mm {in.})

<table>
<tr><th>Mark</th><th>Tool name and shape</th><th>Part No.</th><th>Application</th></tr>
<tr><td>a</td><td>Pitman arm puller
A: Body
B: Bolt
 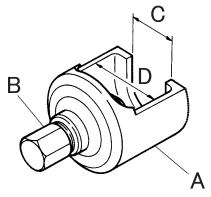

01355
<table><tr><th></th><th>C</th><th>D</th></tr><tr><td>FK</td><td>59 {2.32}</td><td>ϕ92 {3.62}</td></tr><tr><td>FM</td><td>59 {2.32}</td><td>ϕ100 {3.94}</td></tr></table></td><td><FK>
MH061687
*910-00183
<FM>
MC064114
*910-00184</td><td>Removal of pitman arm</td></tr>
<tr><td>b</td><td>Insert tool assembly
 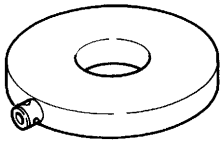
01356</td><td>MC811971
*910-11001</td><td>Formation of backup ring and installation of oil seal</td></tr>
<tr><td>c</td><td>Insert tool
 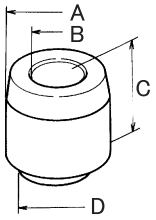

01358
<table><tr><th></th><th>A</th><th>B</th><th>C</th><th>D</th></tr><tr><td>FK</td><td>ϕ40
{1.57}</td><td>ϕ20
{0.79}</td><td>52
{2.05}</td><td rowspan="2">ϕ33
{1.30}</td></tr><tr><td>FM</td><td>ϕ48
{1.89}</td><td>ϕ25
{0.98}</td><td>53.5
{2.11}</td></tr></table></td><td><FK61>
*910-21717

<Except FK61>
MC811974
*910-21715</td><td>Formation of backup ring (side cover side)</td></tr>
<tr><td>d</td><td>Needle
<table><tr><th>A</th><th>B</th></tr><tr><td>120
{4.72}</td><td>ϕ3
{0.12}</td></tr></table>
 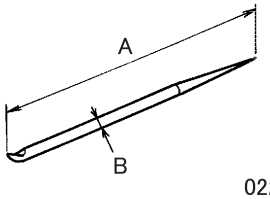

02288</td><td>MC811948
*910-21200</td><td>Removal of O-ring and seal ring</td></tr>
<tr><td>e</td><td>Bar
<table><tr><th></th><th>A</th><th>B</th></tr><tr><td>FK61</td><td>ϕ12.5
{0.49}</td><td>40
{1.57}</td></tr><tr><td>Except FK61</td><td>ϕ16.5
{0.65}</td><td>57
{2.24}</td></tr></table>
 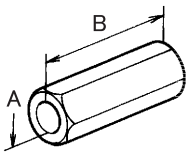

01360</td><td><FK61>
MH063815
*910-22813

<Except FK61>
MC811955
*910-22811</td><td>For turning of retainer</td></tr>
</table>

Mark	Tool name and shape	Part No.	Application
f	Squeeze tool 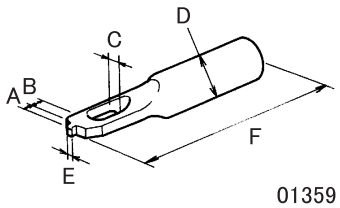 01359 A: 5 {0.20} B: 8 {0.31} C: 18 {0.71} D: ϕ30 {1.18} E: FK61: 4 {0.16}; Except FK61: 6 {0.24} F: 160 {6.30}	<FK61> MH063816 *910-21803 <Except FK61> MC811950 *910-21801	For caulking of retainer
g	Insert tool 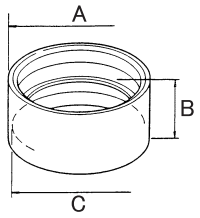 02289 A: FK: ϕ98 {3.86}; FM: ϕ110 {4.33} B: FK: 50 {1.97}; FM: 37 {1.46} C: FK: ϕ90.05 {3.55}; FM: ϕ103 {4.06}	<FK> MC813516 *910-21718 <FM> MC064115 *910-21731	For forming seal ring of piston
h	Wrench assembly 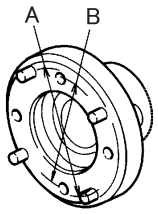 01357 A: FK61: ϕ52 {2.05}; Except FK61: ϕ70 {2.76} B: FK61: –; Except FK61: ϕ62 {2.44}	<FK61> MH062883 *910-10745 <Except FK61> MC811970 *910-10743	Removal and installation of adjusting plug
i	Attachment assembly A: Adapter B: Bolt (pin) 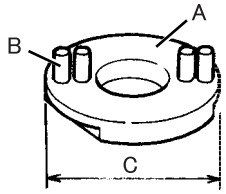 02290 C: ϕ147 {5.79}	MC811969 *910-10671 A: *910-23581 B: *910-23194	Fixture of valve housing

<table>
<tr><th>Mark</th><th>Tool name and shape</th><th>Part No.</th><th>Application</th></tr>
<tr><td>j</td><td>Press-fit tool
 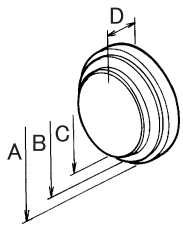

01361
<table><tr><th></th><th>A</th><th>B</th><th>C</th><th>D</th></tr><tr><td>FK61</td><td>ϕ54
{2.13}</td><td>ϕ46.8
{1.84}</td><td>ϕ36.26
{1.43}</td><td>30
{1.18}</td></tr><tr><td>Except FK61</td><td>ϕ45
{1.77}</td><td>ϕ40
{1.57}</td><td>ϕ24.6
{0.97}</td><td>27.5
{1.08}</td></tr></table></td><td><FK61>
MH062884
*910-20405

<Except FK61>
MC811972
*910-20404</td><td>Installation of oil seal</td></tr>
<tr><td>k</td><td>Tool assembly
 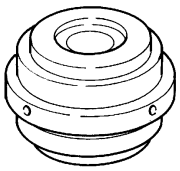
01363</td><td>MC811968
*910-10611</td><td>Assembly of side race, steel balls and bearing cage</td></tr>
<tr><td>l</td><td>Guide assembly
 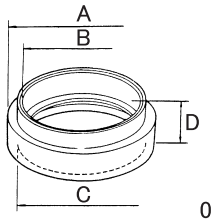

01364
<table><tr><th></th><th>A</th><th>B</th><th>C</th><th>D</th></tr><tr><td>FK61</td><td>ϕ84
{3.31}</td><td>ϕ64.5
{2.54}</td><td>ϕ78
{3.07}</td><td>28
{1.10}</td></tr><tr><td>Except FK61</td><td>ϕ93.5
{3.68}</td><td>ϕ77.5
{3.05}</td><td>ϕ88
{3.46}</td><td>30
{1.18}</td></tr></table></td><td><FK61>
*910-23034

<Except FK61>
MC090148
*910-23033</td><td>Assembly of side race, steel ball and bearing cage</td></tr>
<tr><td>m</td><td>Insert tool
 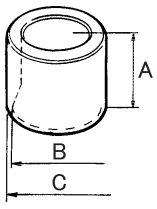

02285
<table><tr><th></th><th>A</th><th>B</th><th>C</th></tr><tr><td>FK61</td><td>30
{1.18}</td><td>ϕ38.6
{1.52}</td><td>ϕ45
{1.77}</td></tr><tr><td>Except FK61</td><td>45
{1.77}</td><td>ϕ47.4
{1.87}</td><td>ϕ48
{1.89}</td></tr></table></td><td><FK61>
MK590131
*910-22777

<Except FK61>
MC811975
*910-22772</td><td>Formation of rotor seal ring</td></tr>
</table>

<table>
<tr><th>Mark</th><th>Tool name and shape</th><th>Part No.</th><th>Application</th></tr>
<tr><td>n</td><td>Insert tool
 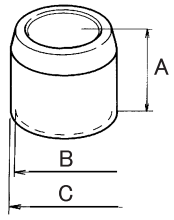

01362
<table>
<tr><th></th><th>A</th><th>B</th><th>C</th></tr>
<tr><td>FK61</td><td rowspan="2">45
{1.77}</td><td>ϕ43.4
{1.71}</td><td>ϕ44
{1.73}</td></tr>
<tr><td>Except FK61</td><td>ϕ47.4
{1.87}</td><td>ϕ48
{1.89}</td></tr>
</table></td><td><FK61>
*910-22773

<Except FK61>
MC811975
*910-22772</td><td>Formation of rotor seal ring of valve housing seal ring</td></tr>
<tr><td>o</td><td>Insert tool
 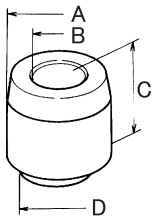

01358
<table>
<tr><th></th><th>A</th><th>B</th><th>C</th><th>D</th></tr>
<tr><td>FK61</td><td>ϕ45
{1.77}</td><td>ϕ20
{0.79}</td><td>45
{1.77}</td><td rowspan="3">ϕ33
{1.30}</td></tr>
<tr><td>FK62, FK65</td><td>ϕ48
{1.89}</td><td rowspan="2">ϕ25
{0.98}</td><td rowspan="2">53.5
{2.11}</td></tr>
<tr><td>FM</td><td>ϕ58
{2.28}</td></tr>
</table></td><td><FK61>
MH062880
*910-21716

<FK62, FK65>
MC811974
*910-21715

<FM>
MC811973
*910-21704</td><td>Formation of backup ring (body side)</td></tr>
</table>

*: Unisia JKC Steering System Part No.

◆Work before removal◆

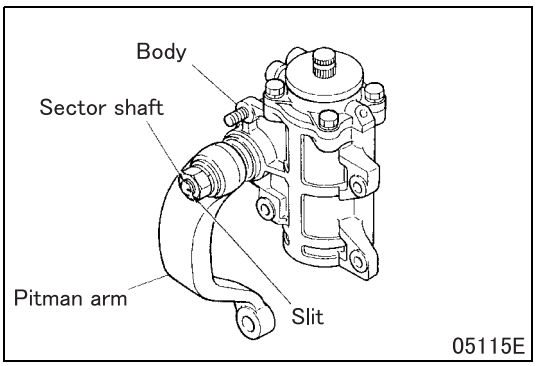

■ **Preparatory work: Setting of pitman arm at neutral position**

- Move the pitman arm and set the V-groove slit of the sector shaft at the center of the body to place gear engagement in neutral position.

◆Removal procedure◆

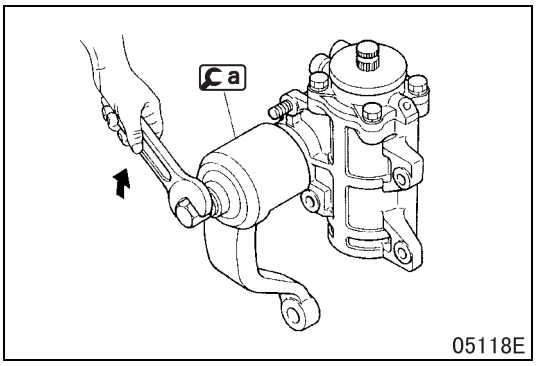

■ **Removal: Pitman arm**

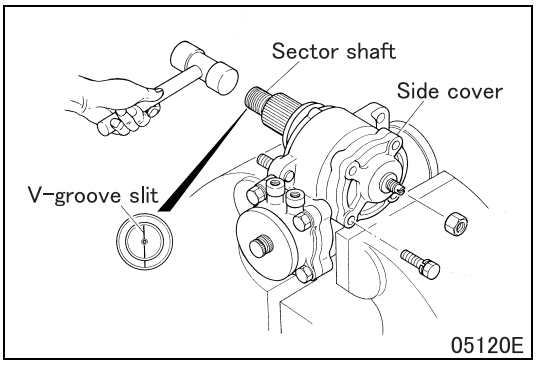

■ **Removal: Sector shaft and side cover**

- Make sure that the piston is at the neutral position (the V-groove slit of the end face of the sector shaft is in the center of the body).
- Tap the end face of the sector shaft to remove the sector shaft and side cover.

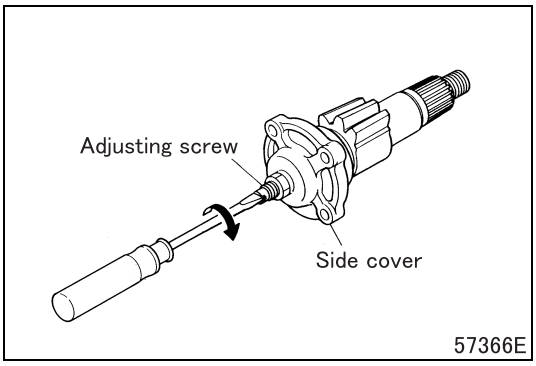

■ **Removal: Side cover**

- Remove the side cover by tightening the adjusting screw.

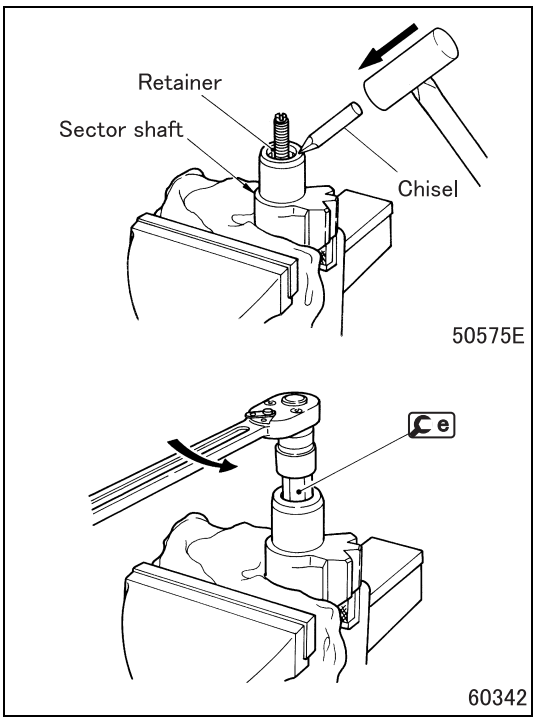

■ **Removal: Retainer**

- Raise the caulked areas (two locations) of the retainer with a chisel.

CAUTION ⚠

- **When pinching the sector shaft with a vise, be sure to apply cloth to it to prevent damage.**

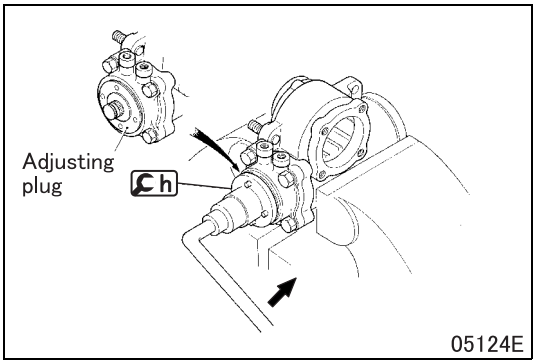

■ **Removal: Piston screw and valve housing**

- Before removing the piston and valve housing, return the adjusting valve by approximately 180° using h to loosen.

CAUTION ⚠

- **Only loosen the adjusting plug because removal of it may cause the bearing in the valve housing to jump out.**

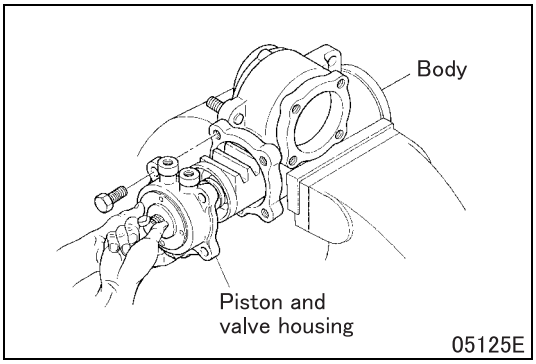

- Remove the piston and valve housing from the body.

CAUTION ⚠

- **Take care not to allow the ball of the piston and valve housing to jump out.**
- **Take care not to damage the inside of the body and the piston.**

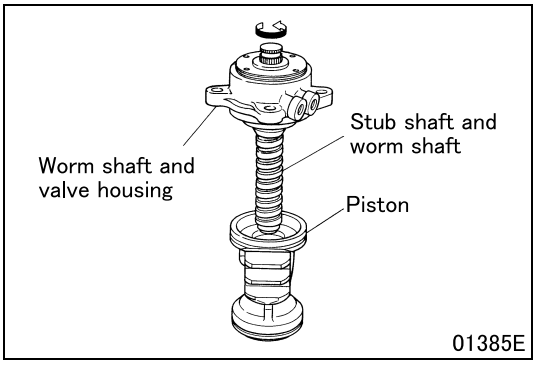

■ **Removal: Piston**

- Hold the worm shaft and valve housing with the piston facing downward, and turn the stub shaft and worm shaft to remove the piston.

CAUTION ⚠

- **Steel balls assembled into the race of the piston and stub shaft and worm shaft fall into the piston. Take care not to tumble the piston.**

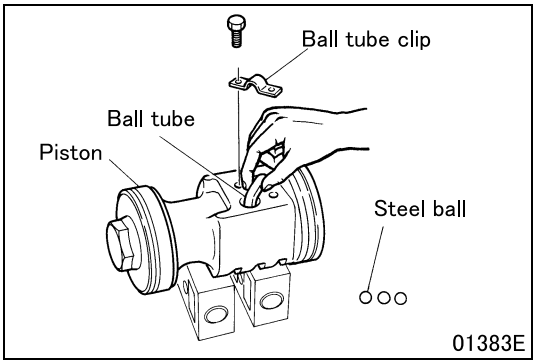

■ **Removal: Ball tube and steel ball**

- After removing the steel balls from the piston, remove the ball tube clip and pinch the ball tube with fingers and lightly move it to remove from the piston.

CAUTION ⚠

- **Take care not to lose steel balls (30 pieces <FK> 32 pieces <FM>).**

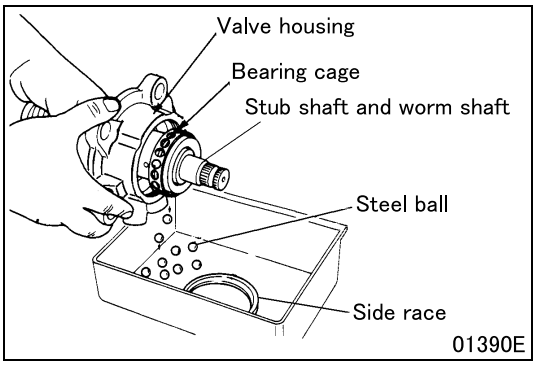

■ **Removal: Stub shaft and worm shaft**

- Press out the piston assembled side of the stub shaft and worm shaft to remove from the valve housing.

CAUTION ⚠

- **The side race, steel balls and bearing cage come apart. Prepare a receiver not to lose them.**

◆Inspection procedure◆

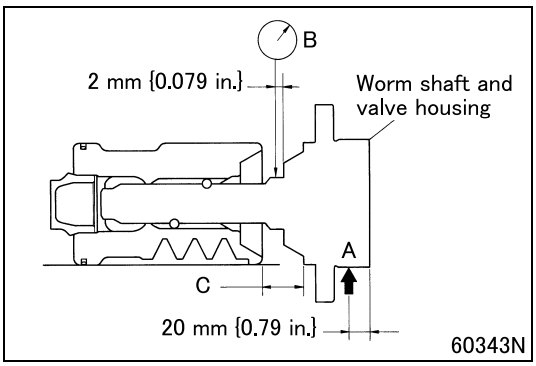

■ **Inspection: Looseness in piston and stub shaft and worm shaft**

- Pull the worm shaft and valve housing to the dimension C as illustrated.
- Measure looseness B of the worm shaft and valve housing in the radial direction when a force of 49 N {11 lbs, 5 kgf} is applied to illustrated area A.
- If the measured value exceeds the limit, replace the defective part(s).

	C (mm {in.})
FK	30.45 {1.20}
FM	42.8 {1.69}

◆Installation procedure◆

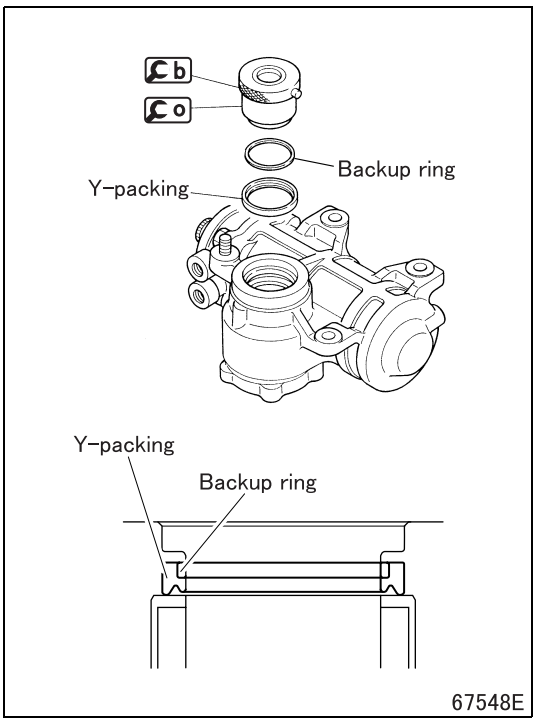

■ **Installation: Backup ring and Y-packing**

- Fill the Y-packing groove with grease and install it in the illustrated direction.
- The backup ring can be easily installed in the illustrated shape. After installation, form it with b and o.

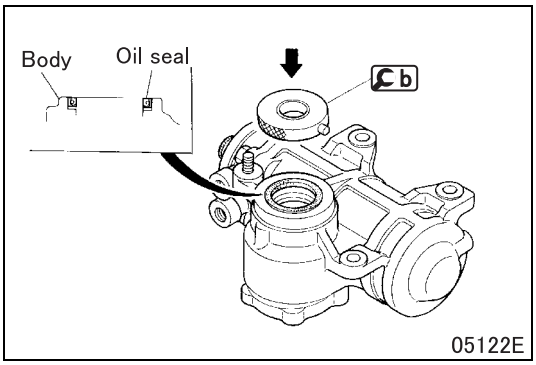

■ **Installation: Seal ring**

- Install the seal ring on the rotor.
- Form the seal ring with m or n.

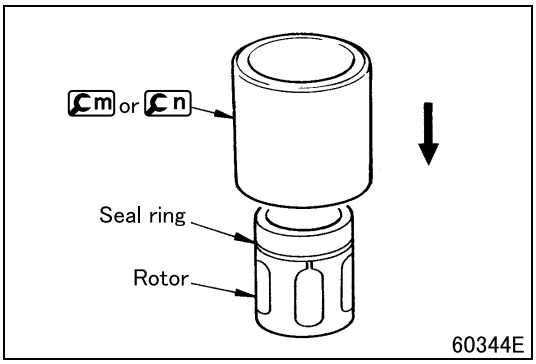

■ **Installation: Oil seal**

- Install the oil seal on the body in the illustrated direction.

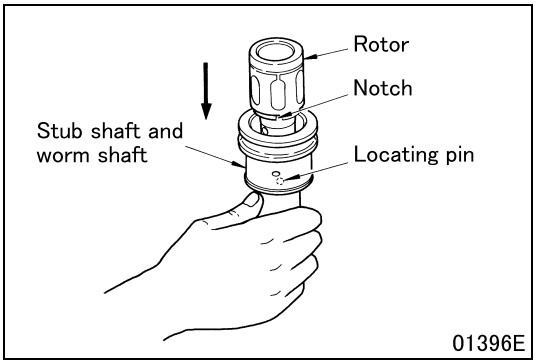

■ **Installation: Rotor**

- Install the notch of the rotor so that it is in alignment with the locating pin of the stub shaft and worm shaft.

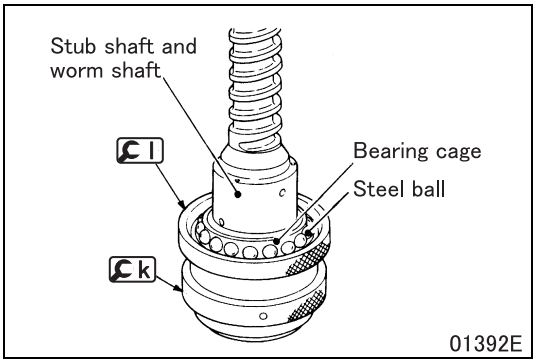

■ **Installation: Side race, steel ball and bearing cage**

- Assemble ck onto cl and install the stub shaft and worm shaft in the illustrated direction.
- Install the bearing cage and steel balls onto the stub shaft and worm shaft.

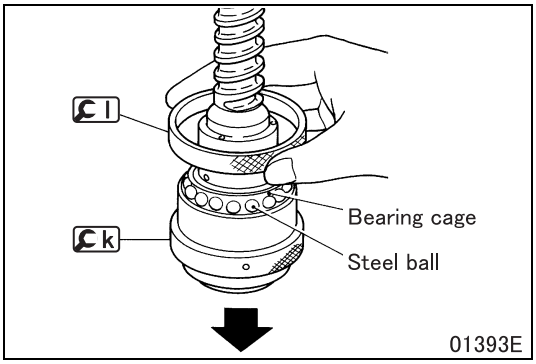

- Hold cl by hand and slide ck downward to set the steel balls in place.

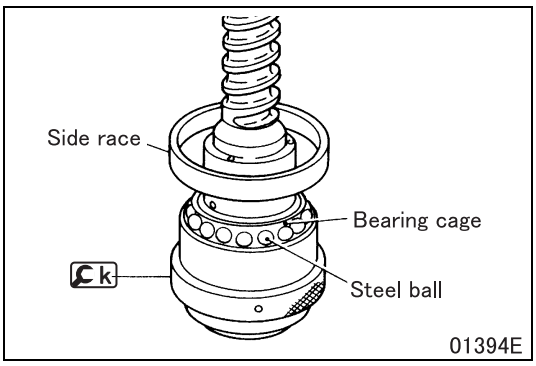

- Install the side race on the steel balls and bearing cage.

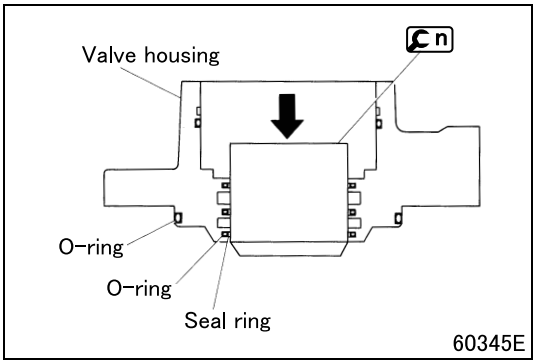

■ **Installation: Seal ring and O-ring**

- Install the seal ring and O-ring on the valve housing.
- Form the seal ring with n.

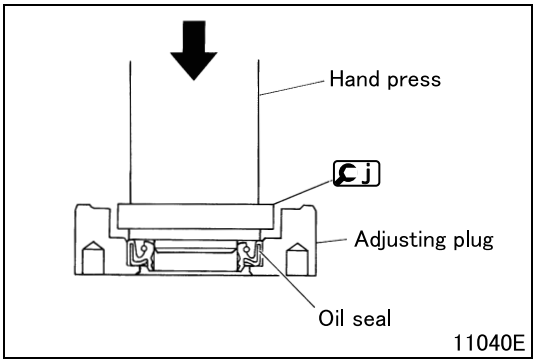

■ **Installation: Oil seal**

- Install the oil seal on the adjusting plug in the illustrated direction.

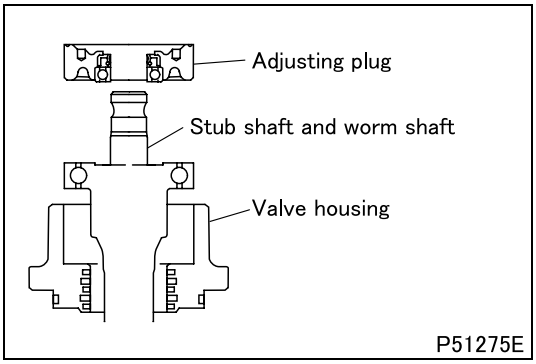

■ **Installation: Stub shaft and worm shaft**

- Install the valve housing on the stub shaft and worm shaft and secure it with adjusting plugs.

CAUTION ⚠

- **Take care not to damage the seal ring with the ball race of the stub shaft and worm shaft.**

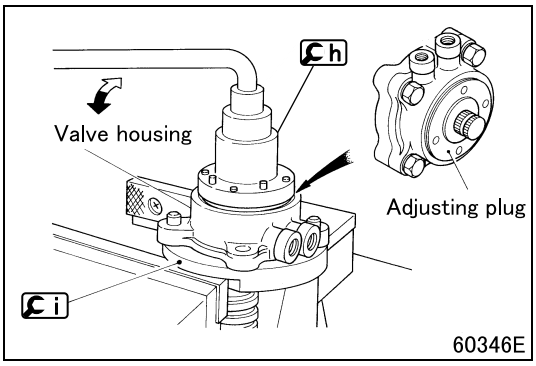

- Secure the valve housing to a vise using i.
- Tighten the adjusting plug to the specified torque with h, and then loosen it by approximately 180°.

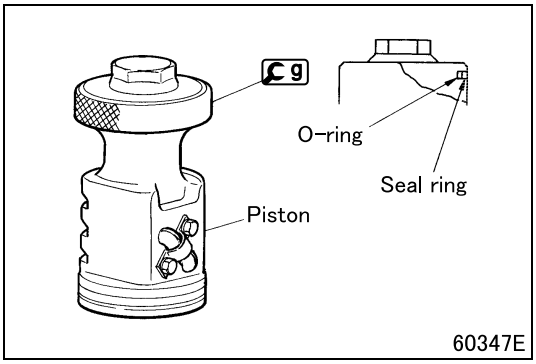

■ **Installation: Seal ring and O-ring**

- Install the seal ring and O-ring on the outer surface groove of the piston and form the seal ring with g.

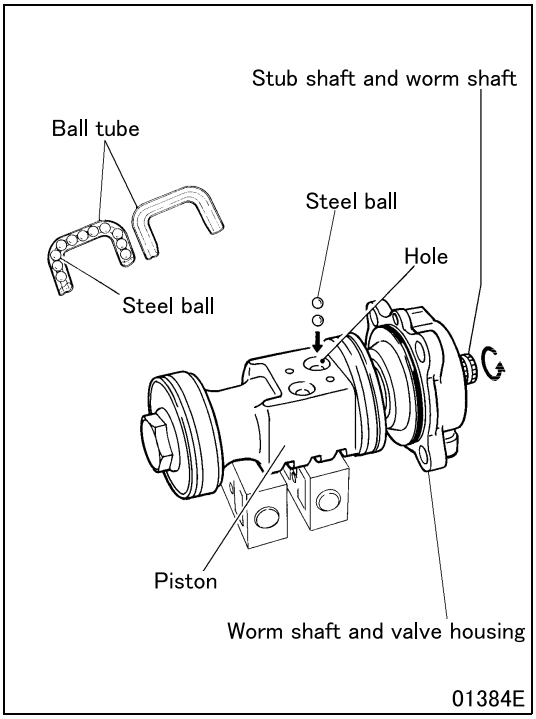

■ **Installation: Ball tube**

- Fill the inside of the ball tube with grease, place 10 to 11 steel balls, and lay another ball tube on top of the ball tube.
- Place the piston on a flat bench and align the assembled worm shaft and valve housing with the ball race position of the piston. While turning the stub shaft and worm shaft, drop steel balls from the ball tube hole.

CAUTION ⚠

- **Take care that steel balls may fall off the ball race if the worm shaft and valve housing is pulled out to the end face position.**

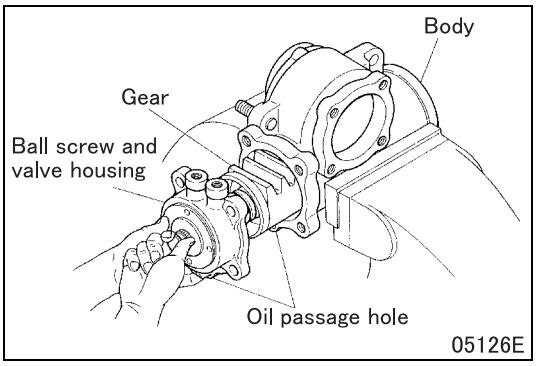

■ **Installation: Ball screw and valve housing**

- Face the gear of the ball screw and valve housing in the illustrated direction so that it can be engaged with the sector shaft.
- Install the gear on the body while lightly holding down the gear by hand to prevent it from turning. Align the ball screw and valve housing with the oil passage holes of the body to install.

CAUTION ⚠

- **Take care not to damage the piston seal ring and the inside of the body.**

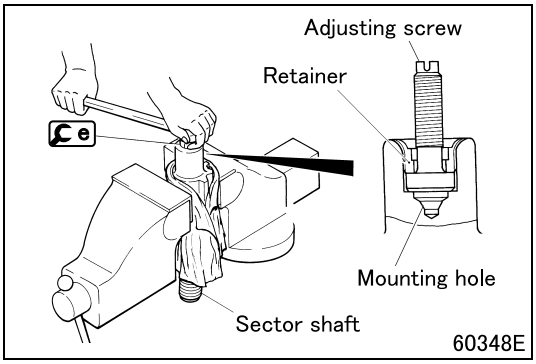

■ **Installation: Retainer**

- Fill the adjusting screw mounting hole of the sector shaft with grease.
- Install the adjusting screw on the sector shaft.
- Install the retainer on the sector shaft using e.
- After tightening, return the retainer by 180° once. Then, retighten it to the torque of 39 N·m {29 ft.lbs, 4 kgf·m} and return it by 20°.
- Make sure that the adjusting screw turns smoothly.

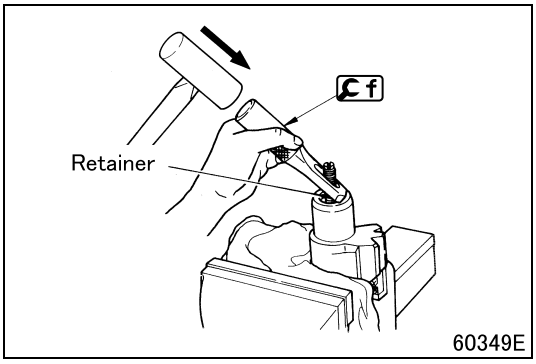

- Caulk caulked locations (two) of the retainer using f.

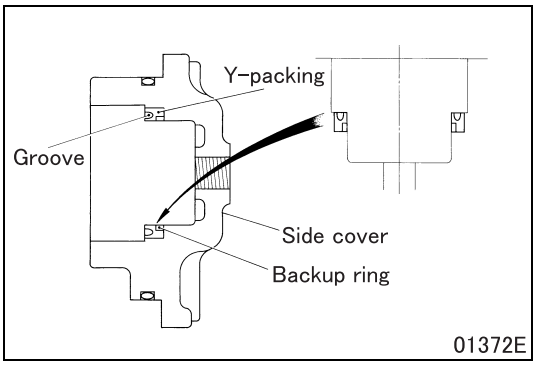

■ **Installation: Backup ring and Y-packing**

- Install the Y-packing on the side cover in the illustrated direction.
- After installing the backup ring, fill the Y-packing groove with grease.

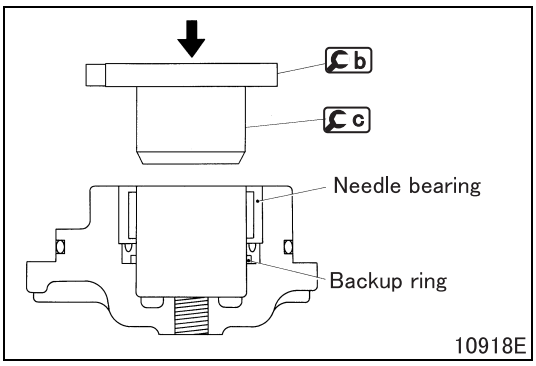

- After installing the needle bearing, form the bend of the backup ring using b and c.

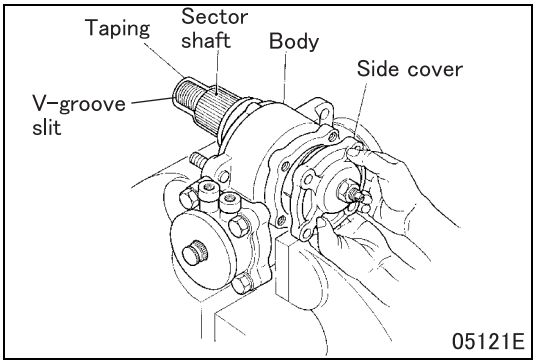

■ **Installation: Sector shaft**

- Set the V-groove slit of the sector shaft of the sector shaft and side cover at the center of the body, and install the sector shaft so that the gear of the piston is engaged with the gear of the sector shaft at their respective center.

CAUTION ⚠

- **Tape the Y-packing to install to prevent it from being damaged by the sector shaft thread.**

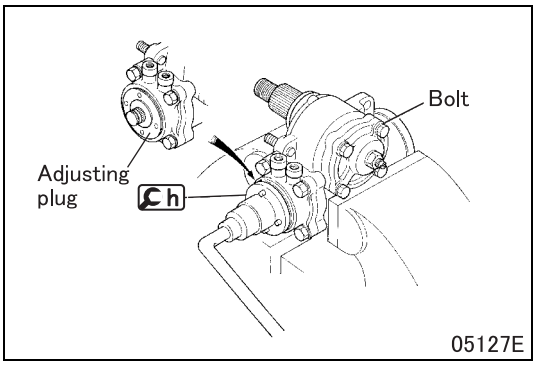

■ **Tightening: Adjusting plug**

- After tightening the side cover mounting bolts to the specified torque, retighten the adjusting plugs to the specified torque using h.

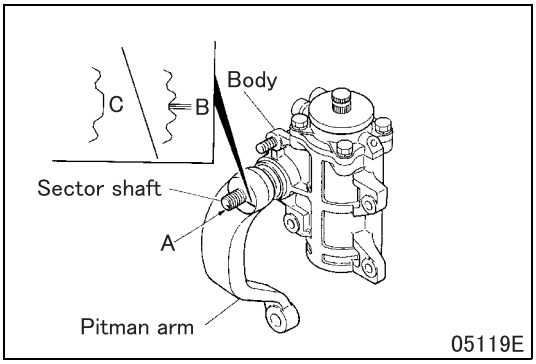

■ **Installation: Pitman arm**

- Set V-groove slit A of the sector shaft at the center of the body, and align V-groove slit B of the pitman arm or missing tooth position C of serration with slit A.

CAUTION ⚠

- **Make sure that the piston operates smoothly by letting the piston make a full stroke using the pitman arm.**

◆Adjustment after installation◆

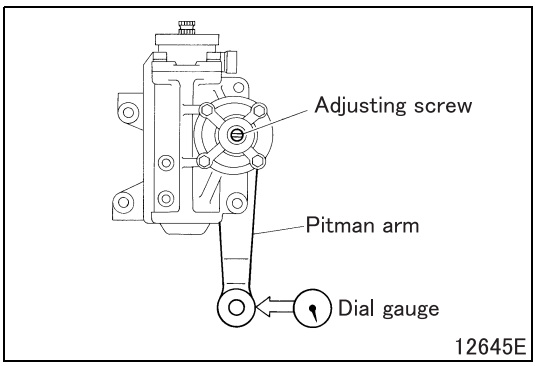

■ **Adjustment: Backlash between sector shaft and piston**

- Measure runout of the tip of the pitman arm with a dial gauge with gear engagement placed in neutral position. Adjust using the adjusting screw so that the measurement is within the standard value.

  Measured load: ±15 N {3.4 lbs, 1.5 kgf} <FK>
  ±20 N {4.5 lbs, 2.0 kgf} <FM>

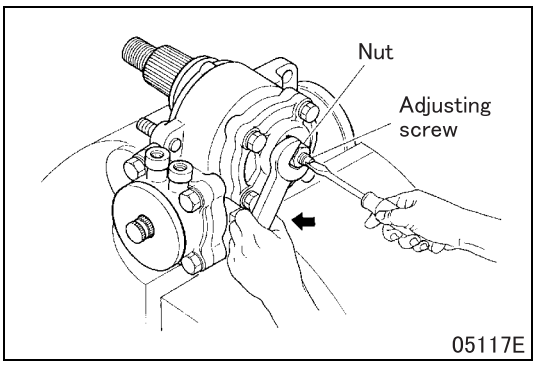

- After adjusting backlash, apply sealant to the adjusting screw threads. Tighten the nut to the specified torque while securing the adjusting screw with a screwdriver to prevent it from turning.

POWER STEERING OIL PUMP <FK>

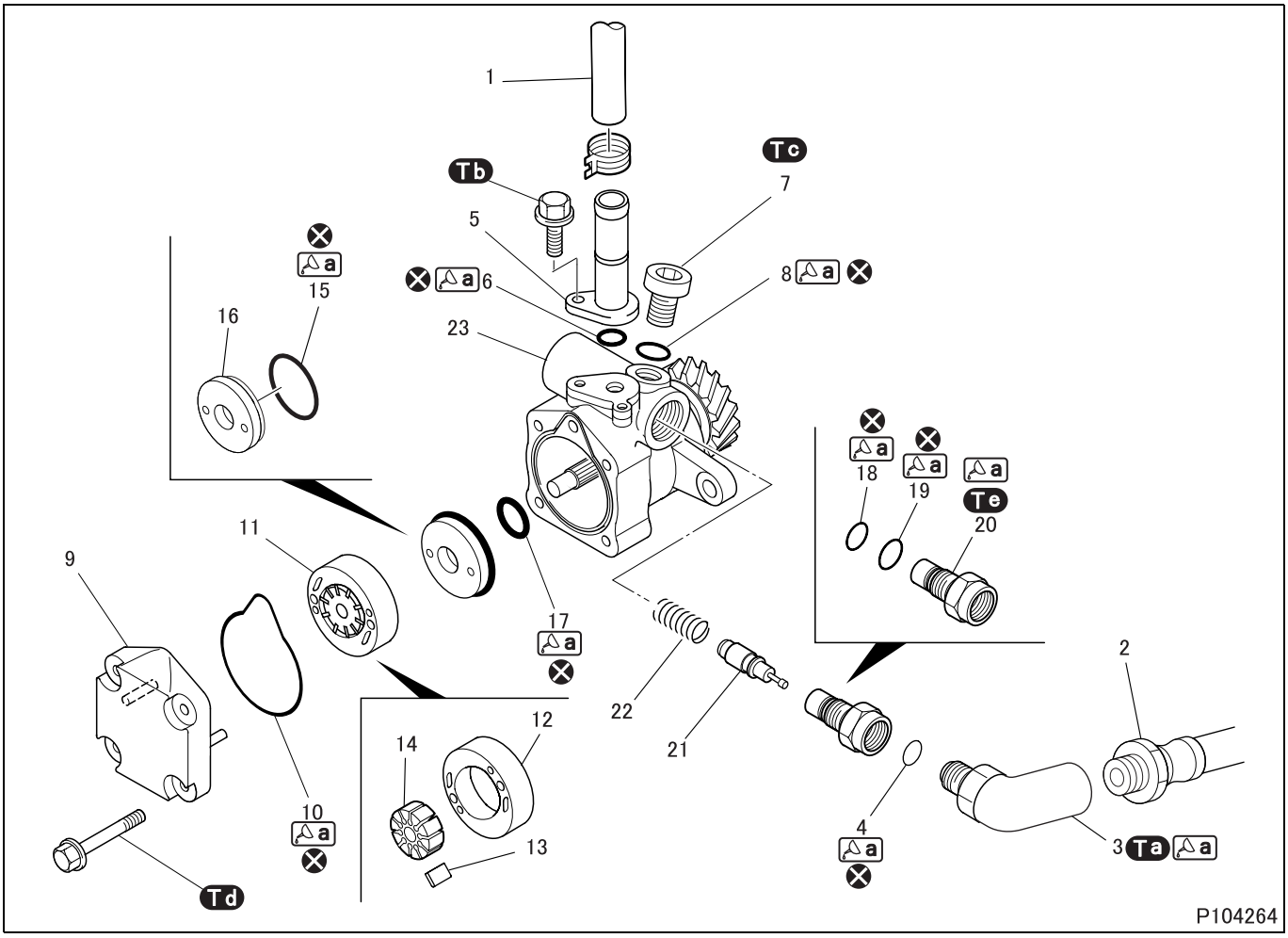

● **Disassembly sequence**

1 Oil hose (intake side)
2 Oil hose (discharge side)
3 Elbow
4 O-ring
5 Suction connector
6 O-ring
7 Plug
8 O-ring
9 Cover
10 O-ring
11 Cartridge assembly
12 Cam ring
13 Vane
14 Rotor
15 O-ring
16 Side plate
17 O-ring
18 O-ring
19 O-ring
20 Connector
21 Flow control valve
22 Flow control spring
23 Body

⊗: Non-reusable parts

CAUTION ⚠

- **The flow control valve and body are of a unit construction.**
- **Do not remove the plug unless it is in an abnormal condition.**
- **See Gr11 for removal and installation of the power steering oil pump.**

● **Assembly sequence**

Follow the disassembly sequence in reverse.

Repair kit: Seal repair kit, cartridge assembly kit

Service standards (Unit: mm {in.})

Location	Maintenance item	Standard value	Limit	Remedy
9	Stepped wear of sliding area of cover rotor and vane	–	0.03 {0.0012}	Replace
13, 14	Clearance between vane and rotor	0.01 {0.00039}	0.06 {0.0024}	Replace
16	Stepped wear of sliding area of side plate rotor and vane	–	0.03 {0.0012}	Replace
21, 23	Clearance between flow control valve and body	0.01 to 0.02 {0.00039 to 0.00079}	0.03 {0.0012}	Replace
22	Free length of flow control spring	36.5 {1.44}	33.5 {1.32}	Replace

Tightening torque (Unit: N·m {ft.lbs, kgf·m})

Mark	Parts to be tightened	Tightening torque	Remarks
Ta	Elbow	68 {50, 6.9}	–
Tb	Bolt (suction connector mounting)	7.8 to 11.8 {5.8 to 8.7, 0.8 to 1.2}	–
Tc	Plug	15 to 20 {11 to 15, 1.5 to 2.0}	–
Td	Bolt (cover mounting)	22 to 26 {16 to 19, 2.2 to 2.7}	–
Te	Connector	49 to 69 {36 to 51, 5.0 to 7.0}	–

Lubricant and/or sealant

Mark	Points of application	Specified lubricant and/or sealant	Quantity
a	Mating surfaces of connector and O-ring	Automatic transmission fluid (DEXRON II or DEXRON III type)	As required
	Mating surfaces of elbow and O-ring		
	O-ring		

◆Inspection procedure◆

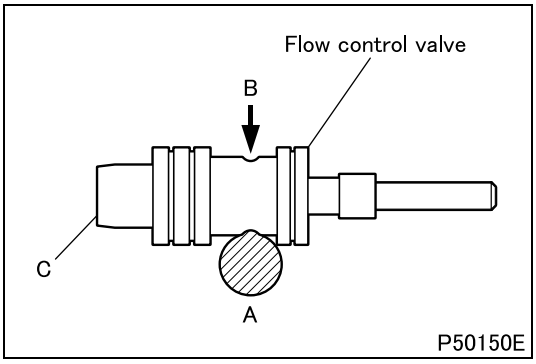

■ Inspection: Flow control valve

- Plug port A of the flow control valve by a finger.
- Apply air pressure (390 to 490 kPa {57 to 71 psi, 4 to 5 kgf/cm^2}) to port B.
- Check for any air leakage from port C.
- If there is any abnormality, replace the power steering oil pump.

◆Installation procedure◆

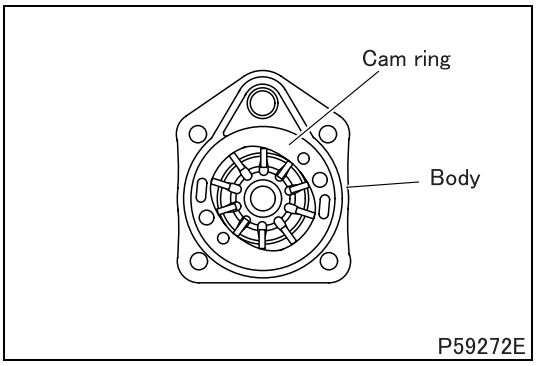

■ Installation: Cam ring

- Install the cam ring on the body in the illustrated direction.

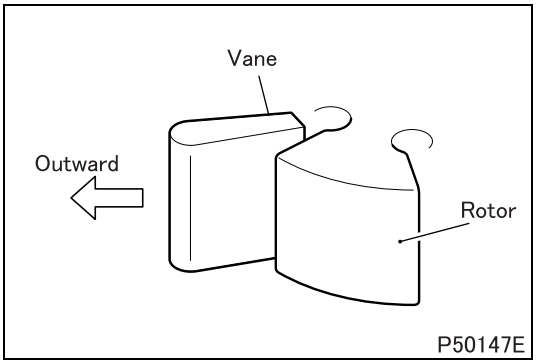

■ **Installation: Vane**

- Install the vane on the rotor with its rounded area facing outward.

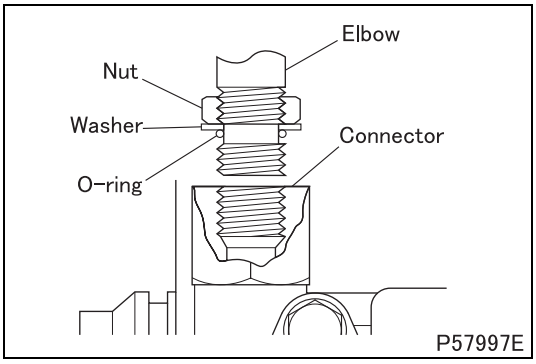

■ **Installation: Elbow**

- Make sure that the nut and washer of the elbow and O-ring are correctly positioned.
- Clean the O-ring mount completely and apply power steering oil to it. When assembling the O-ring, apply automatic transmission fluid to it to prevent damage.

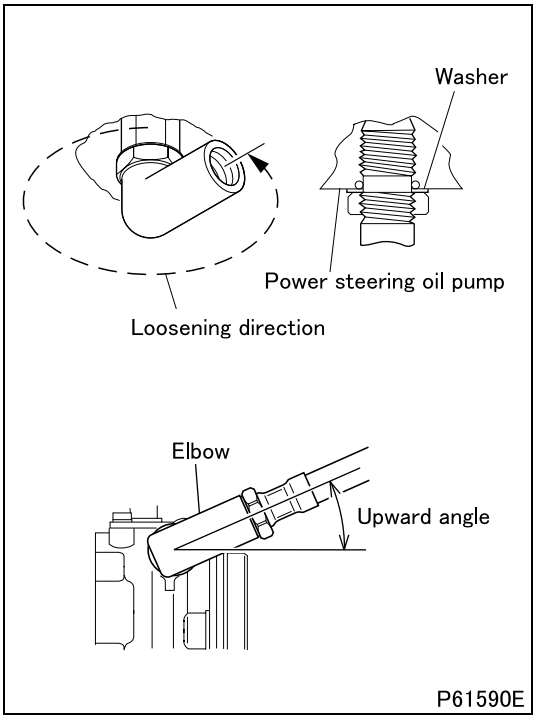

- Screw in the power steering oil pump by hand until the washer contacts the connector mounting surface. From that position, align the power steering oil pump with the upward angle of 20° from the horizontal direction of the body of the power steering oil pump in the loosening direction.

CAUTION ⚠

- **When returning the power steering oil pump to the specified position, do not turn it by more than 270°.**

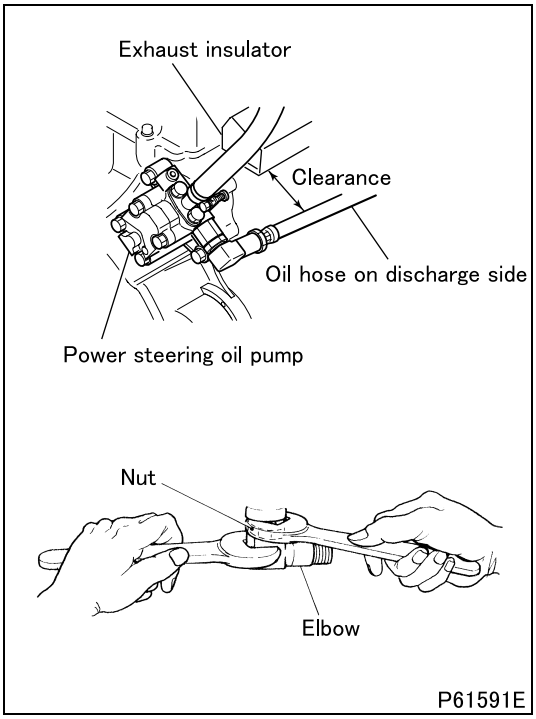

■ **Installation: Oil hose (discharge side)**

- When installing the oil hose on the discharge side, provide sufficient clearance (approximately 50 mm {2.0 in.} or more) to the exhaust insulator.
- Hold down the elbow with a spanner to prevent displacement of the elbow position and tighten the nut to the specified torque.

POWER STEERING OIL PUMP <FM>

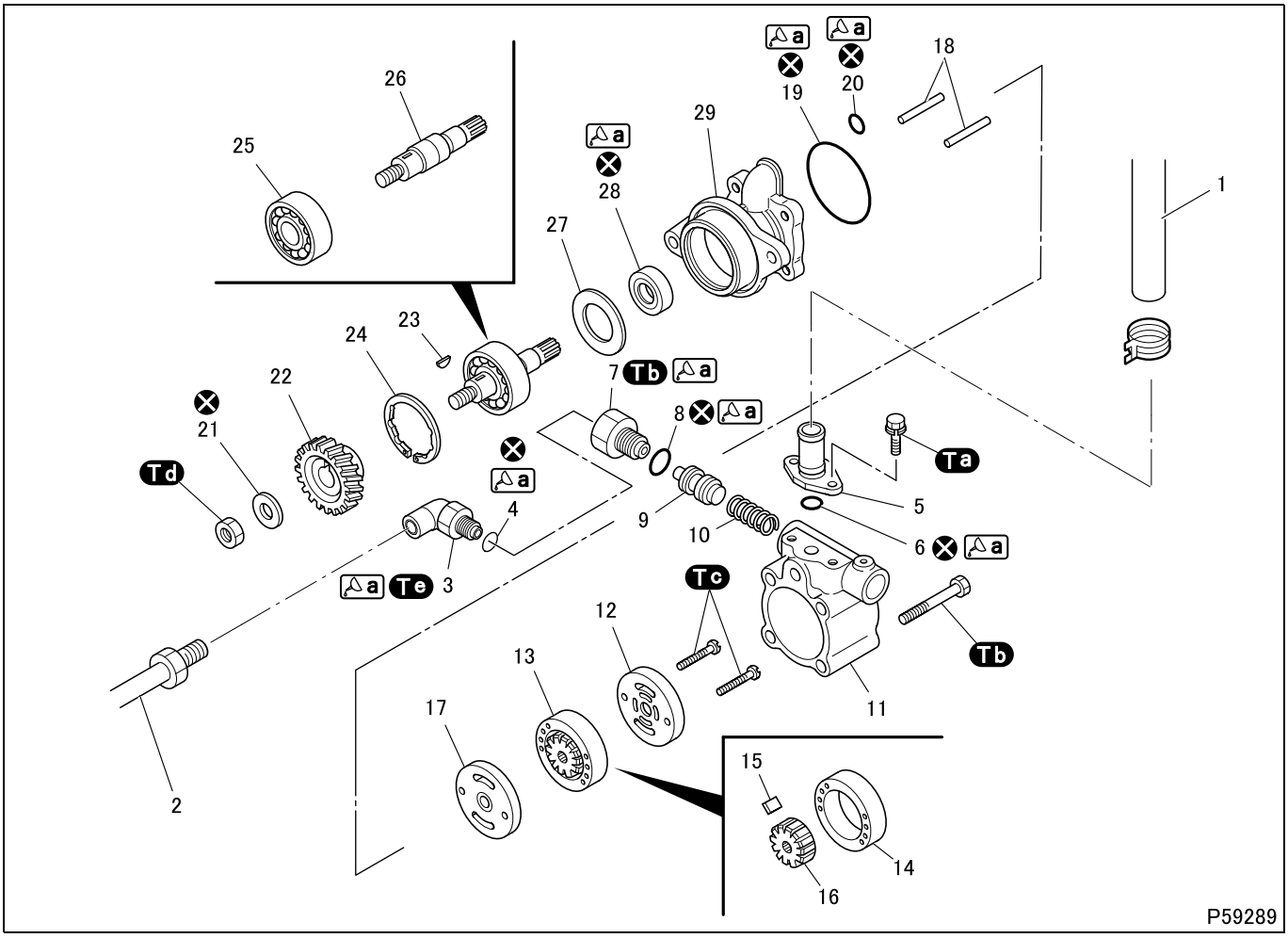

● **Disassembly sequence**

1 Oil hose (suction side)
2 Oil hose (discharge side)
3 Elbow
4 O-ring
5 Hose connector
6 O-ring
7 Connector
8 O-ring
9 Flow control valve
10 Flow control spring
11 Rear body
12 Pressure plate
13 Cartridge assembly
14 Cam
15 Vane
16 Rotor
17 Side plate
18 Straight pin
19 O-ring
20 O-ring
21 Lock washer
22 Oil pump gear
23 Key
24 Retaining ring
25 Ball bearing
26 Drive shaft
27 Retaining ring
28 Oil seal
29 Front body

⊗: Non-reusable parts

CAUTION ⚠

- **Do not attempt to disassemble the flow control valve because it is of a unit construction.**
- **Do not remove the ball bearing and the oil seal unless necessary.**
- **See Gr11 for removal and installation of the power steering oil pump.**

● **Assembly sequence**

Follow the disassembly sequence in reverse.

Repair kit: Seal kit, cartridge assembly kit

Service standards (Unit: mm {in.})

Location	Maintenance item	Standard value	Limit	Remedy
9, 11	Flow control valve-to-front body clearance	–	0.03 {0.0012}	Replace
12, 17	Stepped wear of sliding area of pressure plate and side plate with rotor and vane	–	0.01 {0.00039}	Replace

Tightening torque (Unit: N·m {ft.lbs, kgf·m})

Mark	Parts to be tightened	Tightening torque	Remarks
Ta	Bolt (hose connector mounting)	17.7 to 24.5 {13 to 18, 1.8 to 2.5}	–
Tb	Connector	49.0 to 58.8 {36 to 43, 5 to 6}	–
	Bolt (rear body mounting)		
Tc	Screw	5.9 to 8.8 {4.4 to 6.5, 0.6 to 0.9}	–
Td	Nut (oil pump, gear mounting)	29.4 to 39.2 {22 to 29, 3 to 4}	–
Te	Elbow	68 {50, 6.9}	–

Lubricant and/or sealant

Mark	Points of application	Specified lubricant and/or sealant	Quantity
a	Mating surfaces of connector and O-ring	Automatic transmission fluid (DEXRON II or DEXRON III type)	As required
	Mating surfaces of elbow and O-ring		
	O-ring		

Special tools

Mark	Tool name and shape	Part No.	Application
a	Pliers	*910-22570	Removal and installation of retaining ring
b	Press-fit tool	MK590134 *910-22972	Removal and installation of bearing
c	Stick	MK590137 *910-21632	Removal of oil seal
d	Press-fit tool	MK590135 *910-22974	Installation of oil seal

* Unisia JKC Steering System Part No.

◆Removal procedure◆

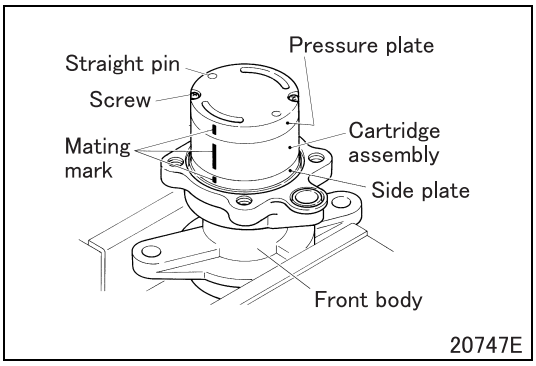

■ Removal: Cartridge assembly

- Put mating marks on the outer surfaces of the pressure plate, cartridge assembly and side plate.
- Remove the screw, and then, remove the pressure plate, cartridge assembly, side plate and straight pin as a set from the front body.

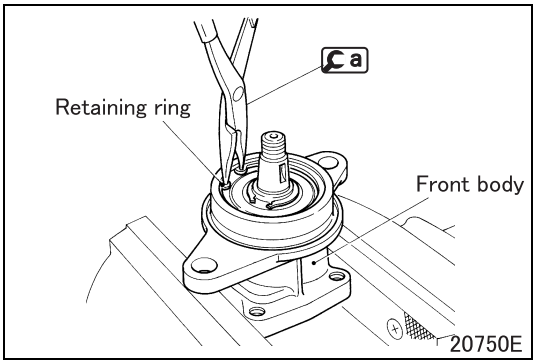

■ **Removal: Retaining ring**

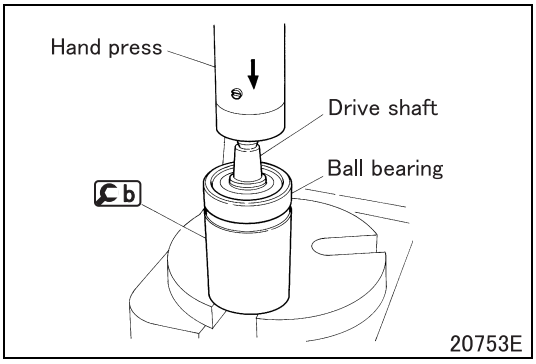

■ **Removal: Ball bearing**

- Remove the ball bearing toward the drive side (gear side) of the drive shaft.

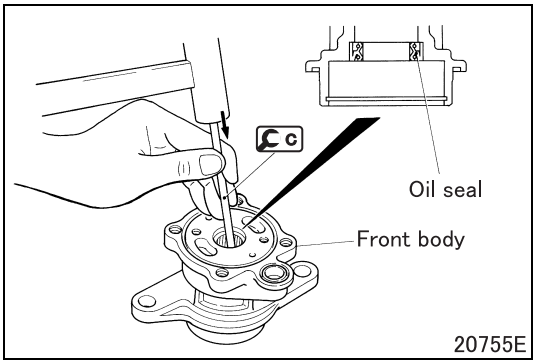

■ **Removal: Oil seal**

◆**Installation procedure**◆

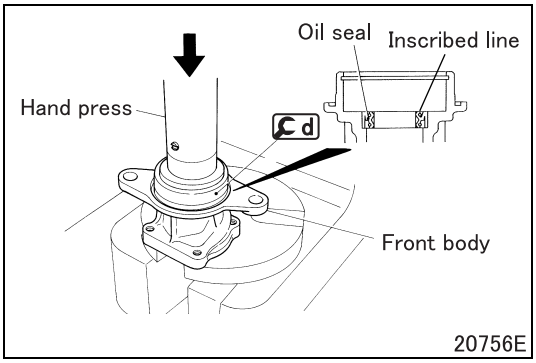

■ **Installation: Oil seal**

- Install the oil seal on the front body in the illustrated direction.

■ **Installation: Ball bearing**

- To install the ball bearing, follow the removal procedure in reverse. (See "■ **Removal: Ball bearing**".)

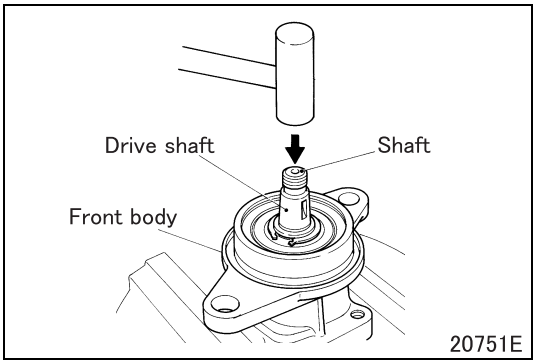

■ **Installation: Drive shaft**

- When installing the drive shaft into the front body, if it is not inserted into the normal position by hand, lightly tap the shaft with a plastic hammer to install.

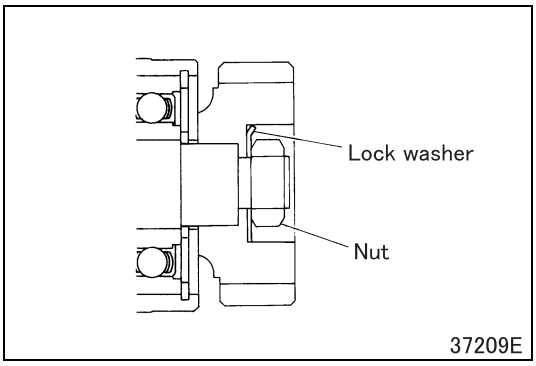

■ **Installation: Lock washer**

- After tightening the nut, bend one location on the circumference of the lock washer.

■ **Installation: Retaining ring**

- To install the retaining ring, follow the removal procedure. (See "■ **Removal: Retaining ring**".)

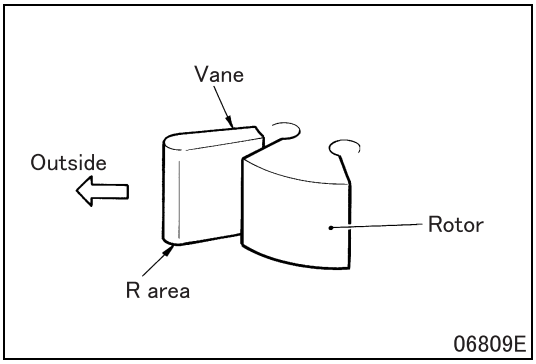

■ **Installation: Vane**

- Install the vane on the rotor with its R area facing outward, and make sure that the vane moves smoothly.
- If the vane is defective, replace the cartridge assembly.

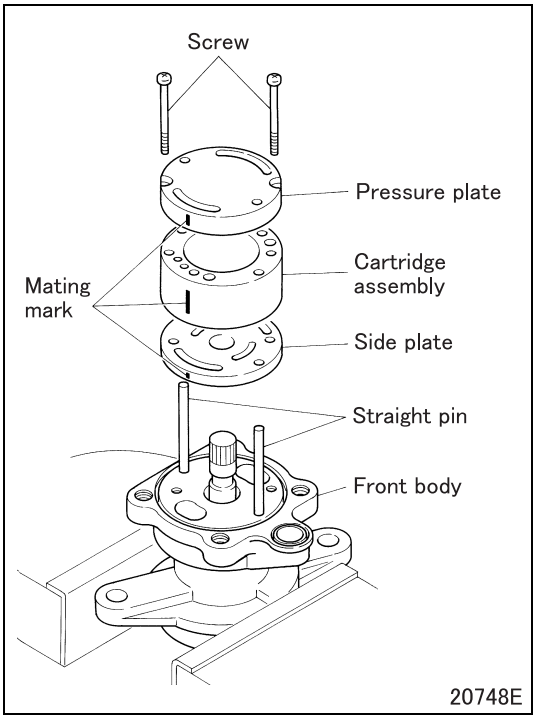

■ **Installation: Cartridge assembly**

- Install the straight pin on the front body.
- Install the side plate, cartridge assembly and pressure plate in alignment with mating marks put at the time of disassembly, and tighten screws to the specified torque.

CAUTION ⚠

- **Do not mistake pin holes of each part when installing.**

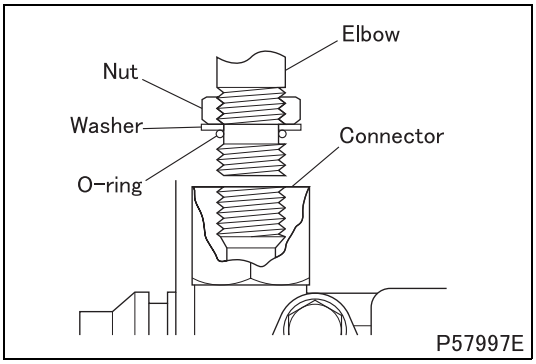

■ **Installation: Elbow**

- Make sure that the nut and washer of the elbow and O-ring are correctly positioned.
- Clean the O-ring mount completely and apply power steering oil to it. When assembling the O-ring, apply automatic transmission fluid to it to prevent damage.

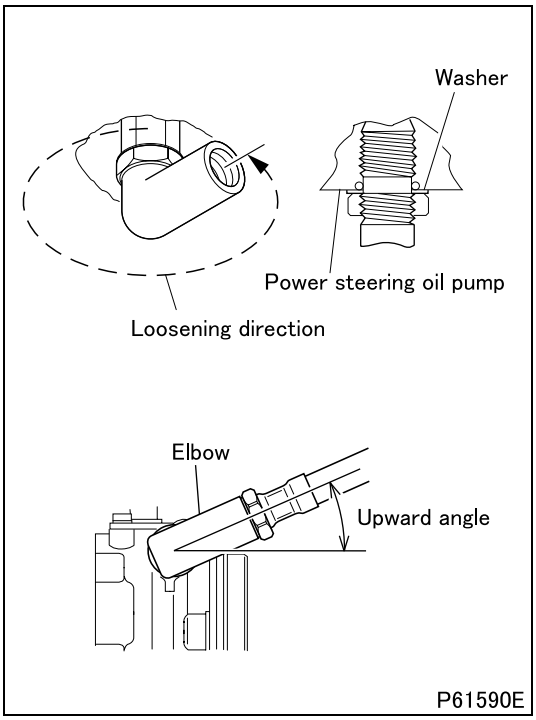

- Screw the elbow in the power steering oil pump by hand until the washer contacts the connector mounting surface. From that position, align the elbow with the upward angle of 20° from the horizontal direction of the body of the power steering oil pump in the loosening direction.

CAUTION ⚠

- **When returning the elbow to the specified position, do not turn it by more than 270°.**

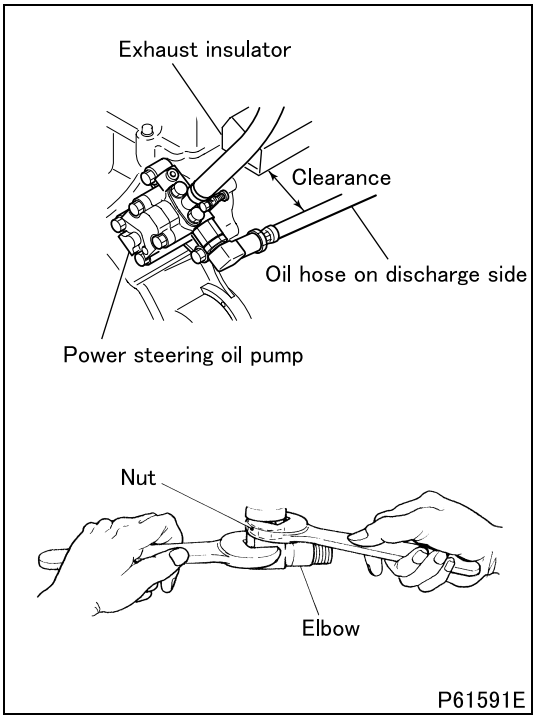

■ **Installation: Oil hose (discharge side)**

- When installing the oil hose on the discharge side, provide sufficient clearance (approximately 50 mm {2.0 in.} or more) to the exhaust insulator.
- Hold down the elbow with a spanner to prevent displacement of the elbow position and tighten the nut to the specified torque.

POWER STEERING OIL TANK

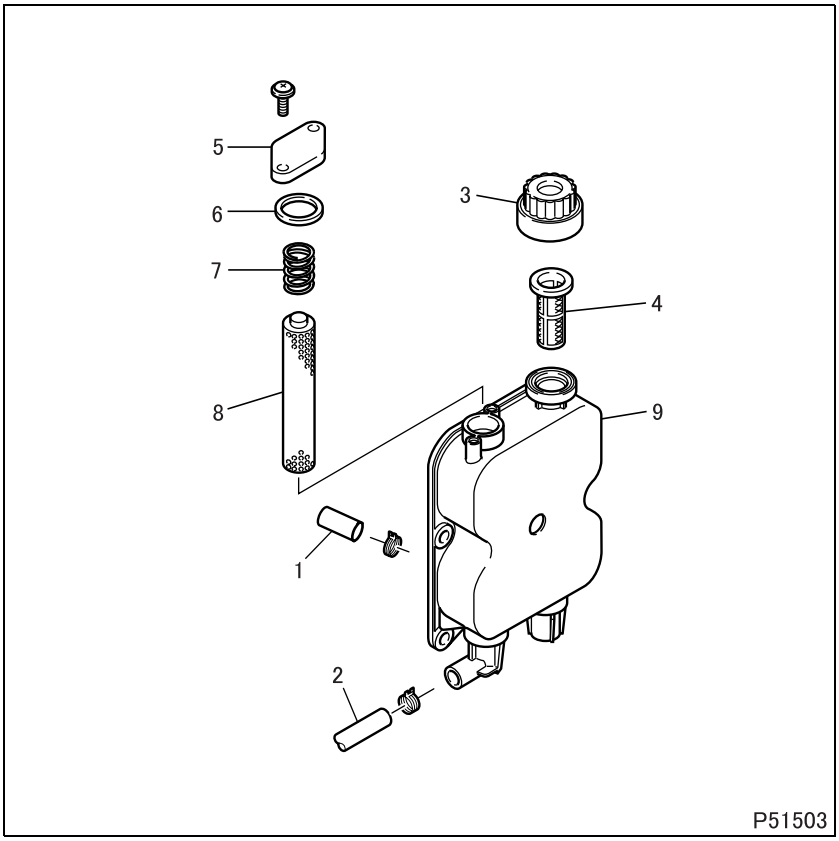

● **Disassembly sequence**

1 Hose
2 Hose
3 Cap
4 Strainer
5 Filter cap
6 Packing
7 Spring
8 Filter
9 Tank body

● **Assembly sequence**

Follow the disassembly sequence in reverse.

Group 41

Bumper And Frame

Table of Contents

Back

Home

MITSUBISHI FUSO TRUCK OF AMERICA, Inc.

Pub.No.TWME0709-41

INDEX

SPECIFICATIONS 41-2

STRUCTURE AND OPERATION
1. Frame 41-3

FRONT BUMPER 41-4

FRAME 41-6

SPECIFICATIONS

Item	Specifications
Frame type	Ladder type
Cross section configuration of side member	⊐ shaped (open) cross section

1. Frame

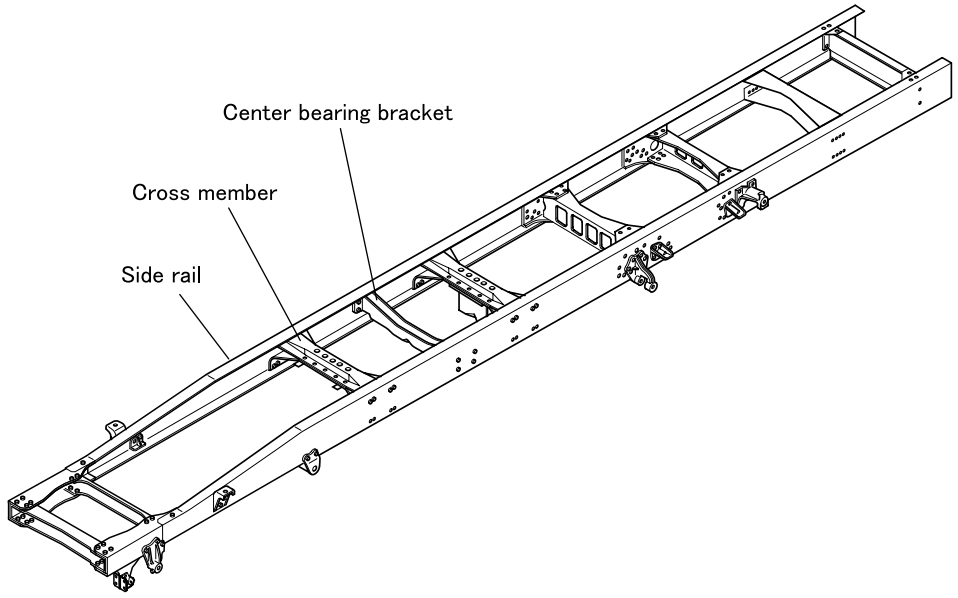

P104844E

- The frame has cross members fastened to the web of the side rails (lateral linkage) so that stress on the joints is minimal. This allows joint rivets to maintain tightness and ensures long-lasting high torsional rigidity.
- Unlike vertical linkage where cross members are fastened to the flange of side rails, no rivets appear on top of the frame, greatly facilitating body mounting.

FRONT BUMPER

<FK>

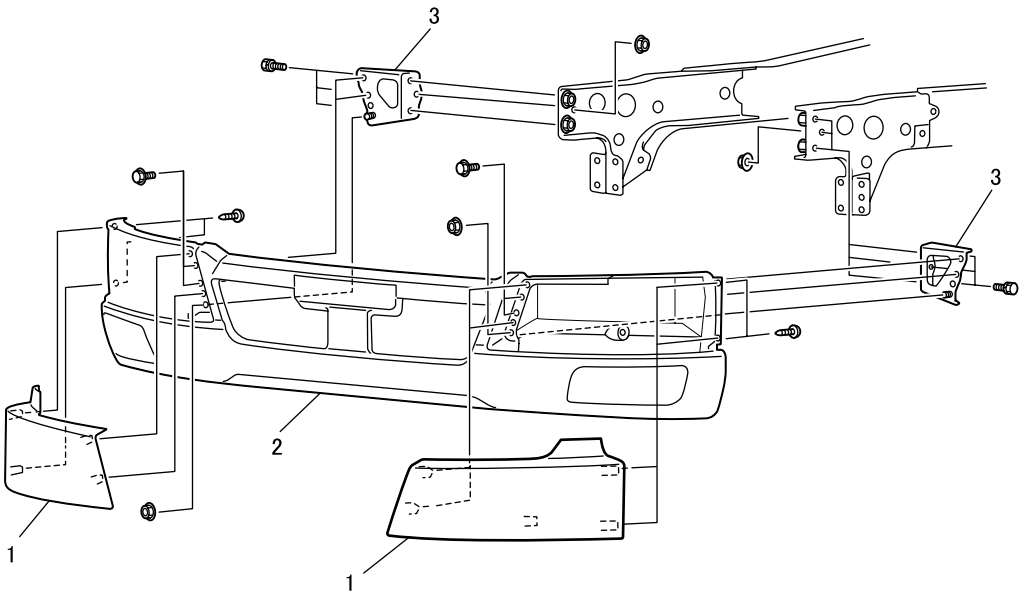

<FM>

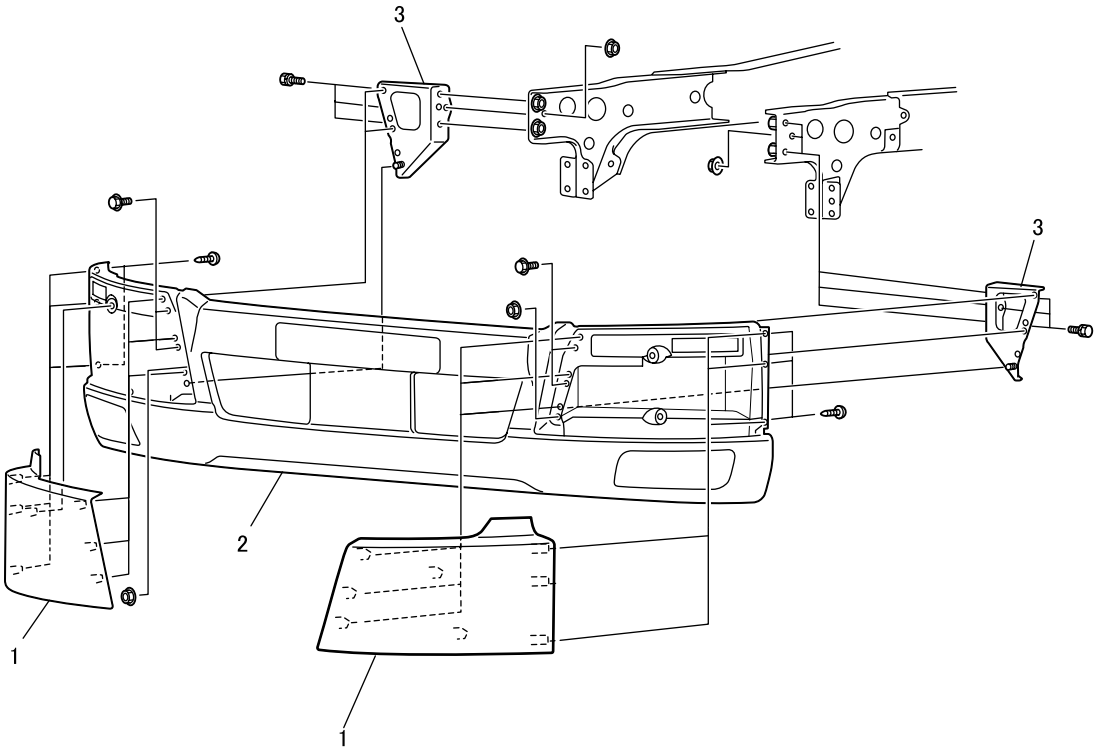

P104845

● Removal sequence

1 Lamp bezel
2 Front bumper
3 Bumper stay

● Installation sequence

Follow the removal sequence in reverse.

<FK>

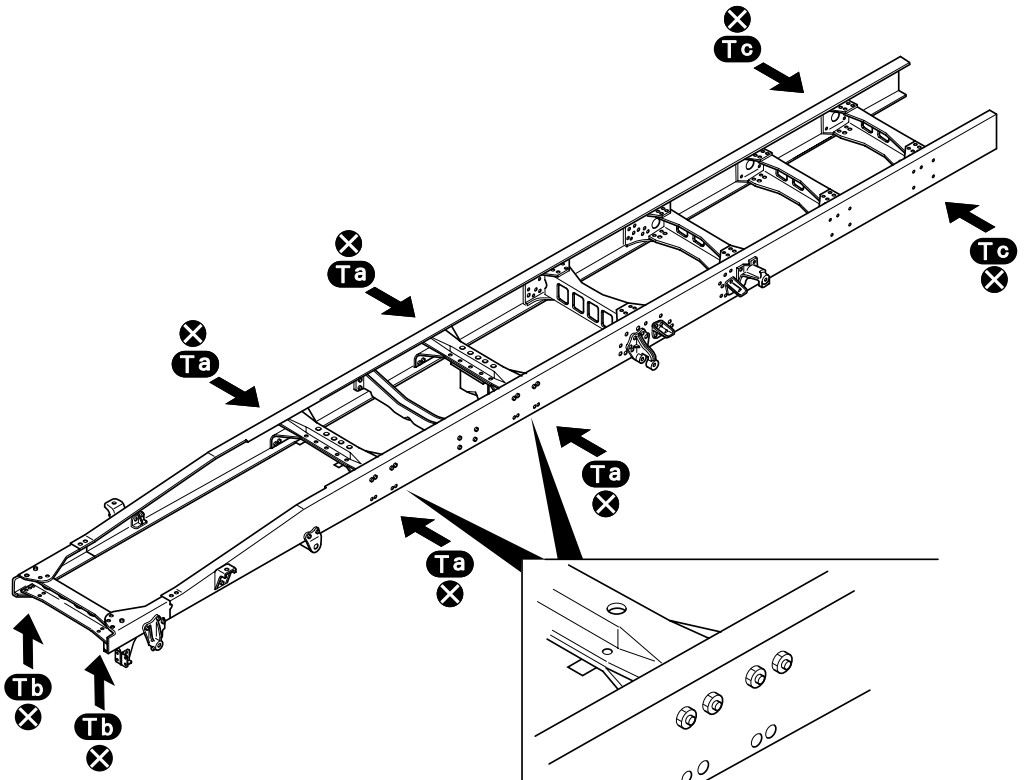

<FM>

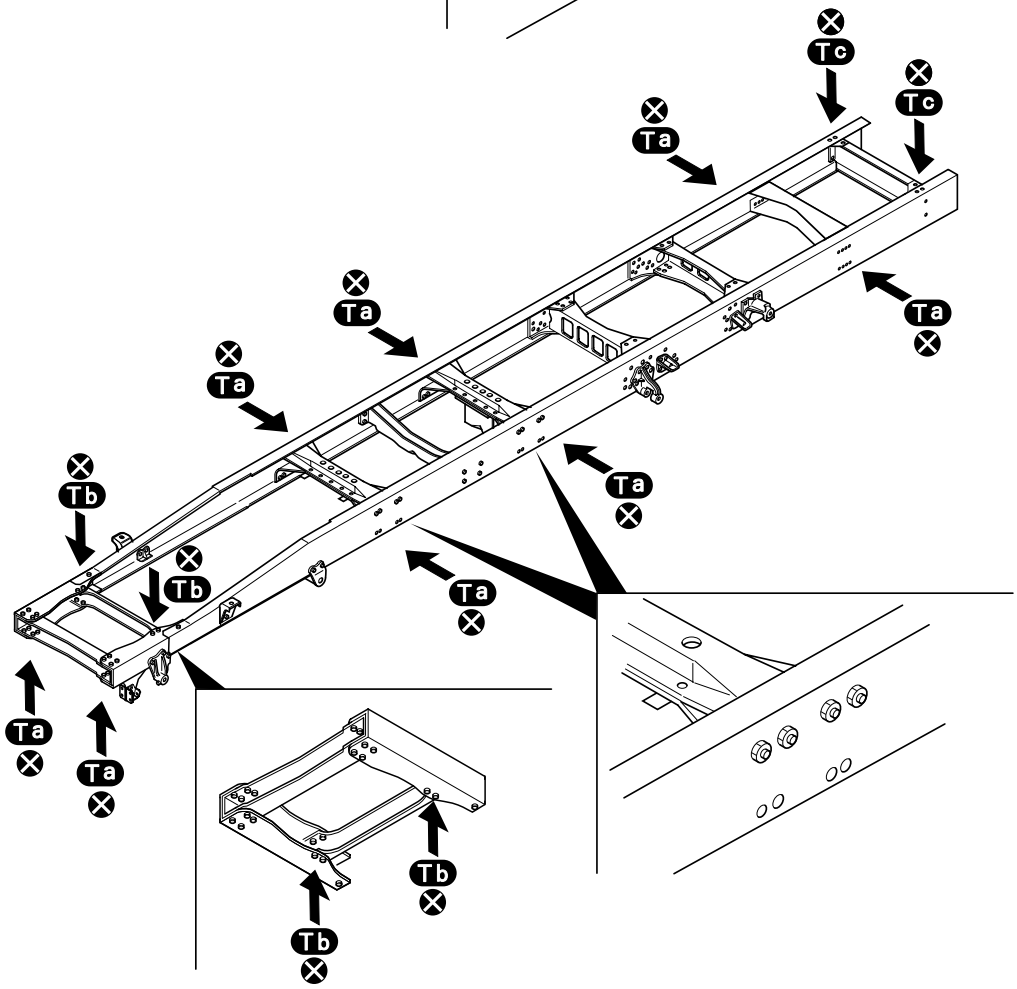

P104846

⊗: Non-reusable parts

CAUTION ⚠

- **Since the mounting bolts or nuts are tightened by a torque-to-yield method, they must not be reused.**

Tightening torque (Unit: N·m {ft.lbs, kgf·m})

Mark	Parts to be tightened		Tightening torque	Remarks
Ta	M12 nut	FK	85 to 110 {63 to 81, 8.5 to 11.0}	–
	M14 nut	FM	200 to 270 {145 to 200, 20.5 to 27.5}	–
Tb	M14 nut	FK	120 to 160 {89 to 120, 12.0 to 16.5}	–
	M12 nut	FM		
Tc	M10 nut		45 to 60 {33 to 44, 4.5 to 6.0}	–

◆Cleaning procedure◆

■ Cleaning: Frame

- Thoroughly remove mud, grease, rust etc. from the outer and inner surfaces of the frame.

◆Inspection procedure◆

■ Inspection: Frame

(1) Inspection for deformation

- If deformation or any other defect is found, repair the frame.

(2) Inspection for cracks

- Remove paint from suspected areas and carefully inspect exposed surfaces for cracks.
- If visual inspection is difficult, perform dye check or any other suitable examination.
  If a crack is found, repair as follows.

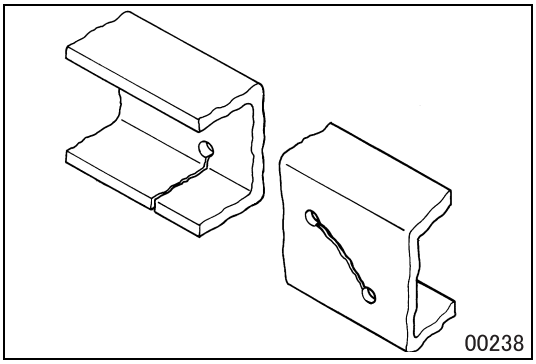

(3) Repair of crack in frame

- With the vehicle unloaded, level the frame.
- Drill a hole with a diameter roughly twice the thickness of the frame plate, 10 mm {0.39 in.} from the inside end of the crack.

NOTE

- **If the crack is within the frame plate, drill holes at both ends of the crack.**

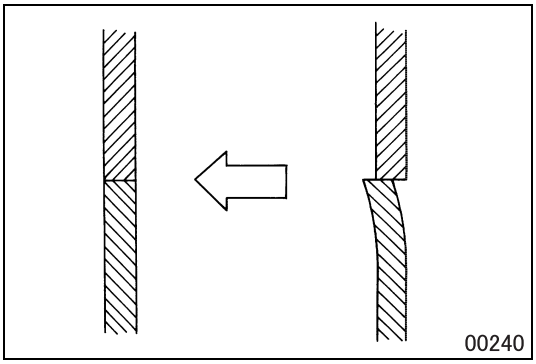

- If the edges of the crack are uneven, even them out.

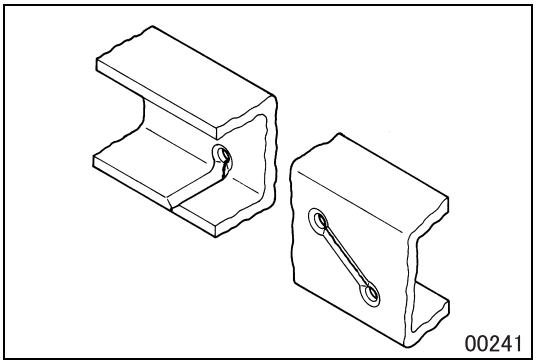

- Using a grinder, cut a 90° V-channel at the crack to a depth of approximately 2/3 of the frame plate thickness, then fill the channel with filler metal by welding.

CAUTION ⚠

- **Avoid gas welding because heat embrittles the material of welded area. Be sure to use electric welding.**
- **Electric welding could allow the welding current to reverse through ground circuit and burn electrical components. To prevent this, be sure to disconnect negative cable from the battery and ground the welding machine at a point near the weld zone before work.**
- **For electric welding, follow other precautions given elsewhere. (See Gr00.)**
- **If there are any combustibles, such as pipeline, wiring harness, rubber part and fuel tank, near the weld zone, be sure to cover them for protection.**
- **Use low-hydrogen type coated CO_2 and arc welding electrodes for welding and check that there are no harmful defects such as undercut and blow hole after welding.**
- **Preheat the area around weld zone to approximately 50 to 350°C {120 to 660°F} before welding when the workshop temperature is below 0°C {32°F}.**
- **Be sure to protect mountings that may be affected by heat, such as main sills, using heat insulators or the like.**

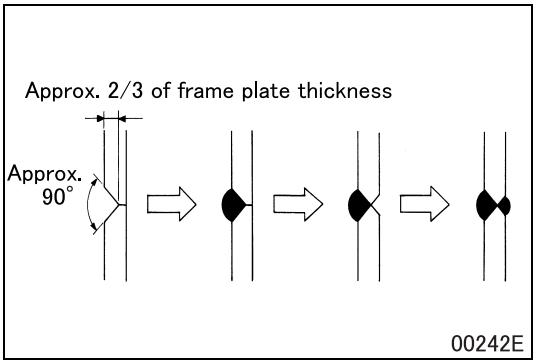

- Next, make a similar V-channel on the opposite side of the weld. At the same time, deposit metal to cover up the hole or holes at both ends of the crack by welding.

NOTE

- **In cold climates, heat the weld zone to approximately 200°C {390°F} after welding.**

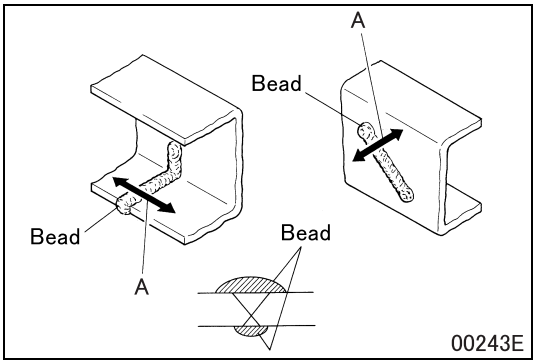

- After welding, run a grinder over the bead at right angles A.
- Remove the notched portion from the weld and finish the ground surfaces flat to a thickness equal to the original plate thickness.

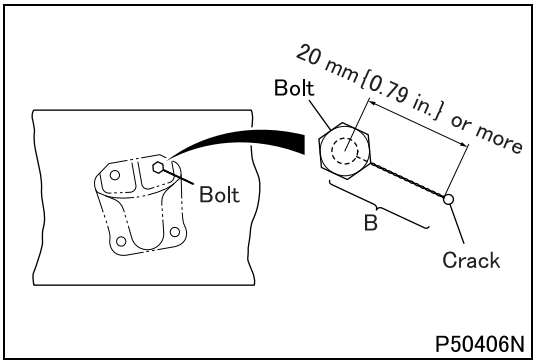

[Repairing crack from rivet or bolt hole]

- To make the edges of the cracked hole even, temporarily tighten the bolt in the hole.
- First, weld to close the crack at a point at least 20 mm {0.79 in.} apart from the center of the bolt.
  For this welding, refer to the aforementioned welding procedures for crack repair.
- Remove the temporary bolt. After making hole edges even, weld to close the rest of the crack B. Simultaneously fill the hole with weld metal.
- Drill a hole at the location of original hole, and install a rivet or bolt in it.

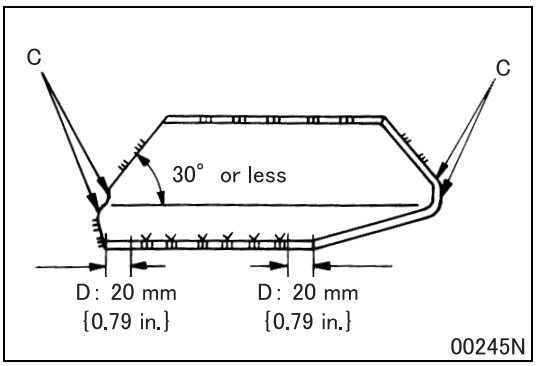

[Repairing using reinforcement plate]

- To prevent the concentration of welding stress at both ends C of the reinforcement plate, cut the ends at a bevel of 30° or less for welding. Do not weld at points D.
- The reinforcement plate must have enough to cover the cracked area.

NOTE

- **Reinforcement plate thickness: Equal to frame plate thickness**
- **Reinforcement plate material: As specified below or equivalent**

HTP540 (high-tensile steel sheet)

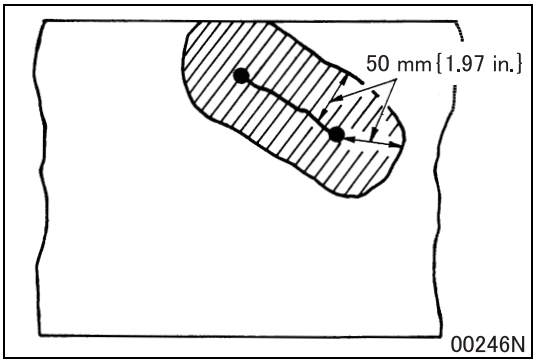

- After welding, heat the hatched area to 600 to 700°C {1110 to 1290°F}.

CAUTION ⚠

- **Be sure to protect mountings that may be affected by heat, such as main sills, using heat insulators or the like.**

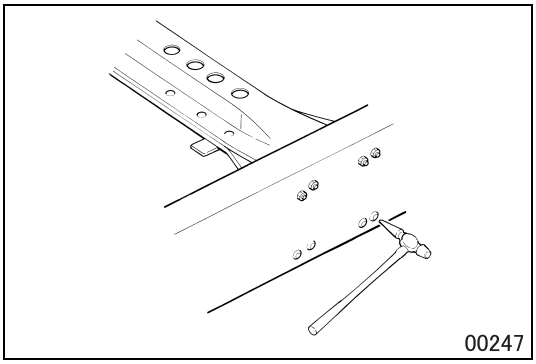

(4) Inspection of rivets for looseness

- Lightly tap the head of each rivet using an inspection hammer and feel or listen for the echo to determine if the rivet is loose.
- Rusting between rivet and frame plate is an indication of loosened rivet.

CAUTION ⚠

- **Be sure to replace loose rivets. They could break off or allow frame cracks to develop from the rivet holes, leading to an accident.**

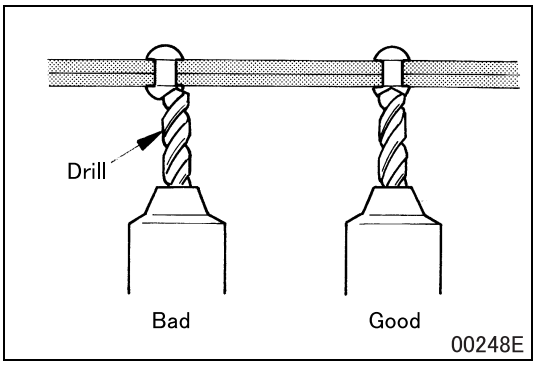

(5) Replacement of rivet

- To remove a rivet, make a dent in the middle of the loosened rivet's head with a punch, and then, eliminate its head using a drill or grinder.

NOTE

- **The rivet hole must be intact.**

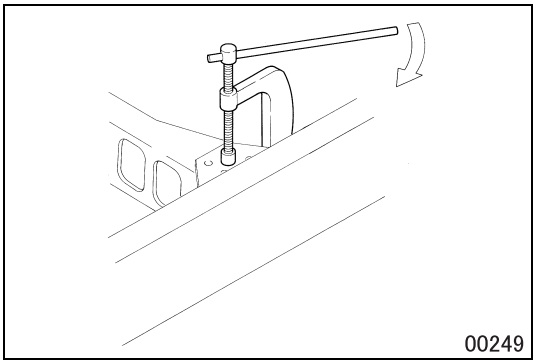

- Before riveting, clamp the two plates closely together near the rivet hole using a C vice.
- Using a riveting machine, drive the rivet (cold rivet) into the rivet hole.
- If riveting is unfeasible, ream the rivet hole, drive a reamer bolt into the hole, fully tighten the nut, then weld it in place.
  For the reamer bolt and nut to be used, use a flange bolt and a flange nut.

(6) Inspection of bolts and nuts for looseness

- Inspect the mounting bolts of cross members for looseness. If any loose bolt is found, retighten it to specified torque.

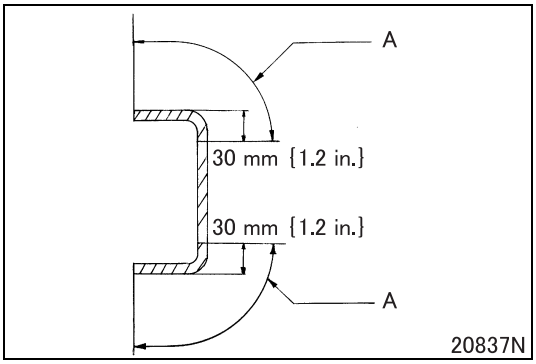

(7) Drilling hole in frame

- When required to drill holes in the frame, heed the following warning.

CAUTION ⚠

- **When drilling holes in the side rail, avoid the illustrated ranges A to prevent cracking.**
- **Grind the edge of drilled hole smooth.**
- **Avoid drilling holes as much as possible in those areas that otherwise will radically alter the rigidity of the side rail, such as a joint with a cross member, the ends of a stiffener, and the areas around them.**
- **Drilled holes should be ϕ17 mm or less, and spacing between them should be as follows.**
  ϕ13 mm {0.51 in.} or less: 30 mm {1.18 in.} or more
  ϕ15 mm {0.59 in.} or less: 45 mm {1.77 in.} or more
  ϕ17 mm {0.67 in.} or less: 65 mm {2.56 in.} or more

Group 42

Cab

Table of Contents

Back

Home

MITSUBISHI FUSO TRUCK OF AMERICA, Inc.

Pub.No.TWME0709-42

INDEX

SPECIFICATIONS **42-2**

STRUCTURE AND OPERATION
1. **Front Cab Mounting** **42-4**
2. **Rear Cab Mounting** **42-6**
3. **Cab Tilt Link** **42-7**

TROUBLESHOOTING **42-8**

REMOVAL AND INSTALLATION OF CAB **42-12**

FRONT CAB MOUNTING **42-18**

REAR CAB MOUNTING **42-22**

CAB TILT LINK **42-24**

CAB STAY **42-26**

SPECIFICATIONS

Cab assembly

Item	Specifications
Type	Cab over type (forward control type)
Mass kg {lb}	Approximately 540 {1190}

Cab mounting

Item	Specifications	
	Front	Rear
Type	Semi-floating type	
Mountings	Liquid-filled rubber cushioned mountings	Rubber cushioned mounting

Cab tilt mechanism

Item	Specifications
Type	Torsion bar type
Tilt angle	44° *
Cab tilt lock	Manually operated hook type

*: The tilt angle is normally set to 44 degrees. But the angle is set to 49 degrees (over tilting) operating the cab stay to increase the torsion angle of the torsion bar when removing and installing the cab.

M E M O

1. Front Cab Mounting

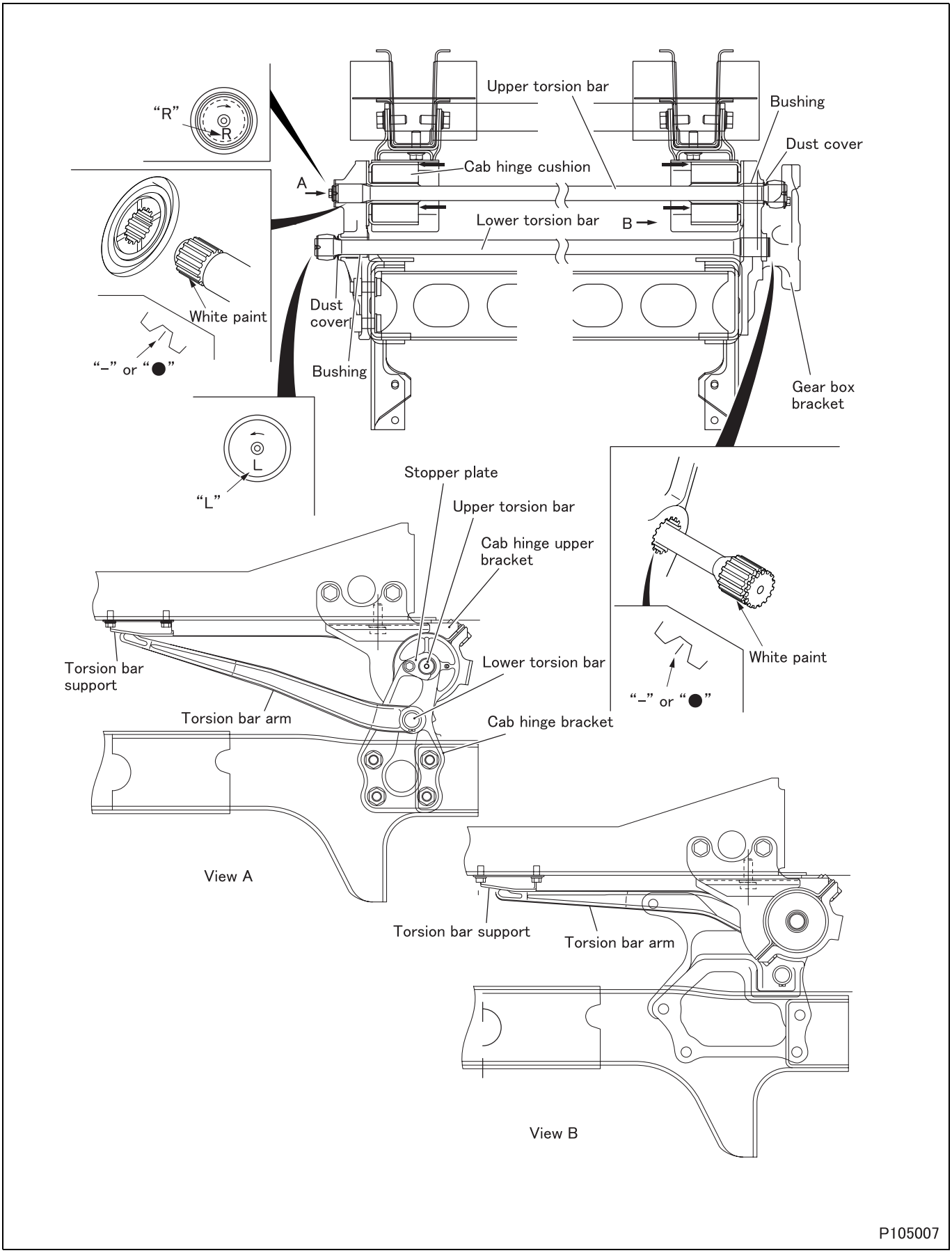

P105007

- Upper torsion bar and lower torsion bar have their particular torsional directions. To ensure that they are installed correctly, the upper and lower torsion bars have “L” or “R” indicating the direction of torsion stamped at the RH end faces.
- Upper torsion bar has alignment mark (white paint) which should be aligned with alignment mark “–” or “●” on cab hinge bracket.
- Lower torsion bar has alignment mark (white paint) which should be aligned with alignment mark “–” or “●” on gearbox bracket.

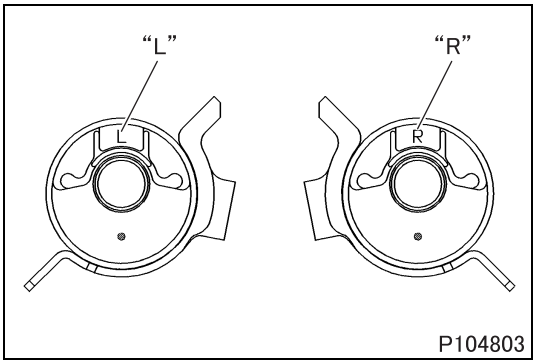

- Cab hinge cushion uses a liquid-filled rubber element.
- Cab hinge cushion has the identification mark “L” or “R”.

2. Rear Cab Mounting

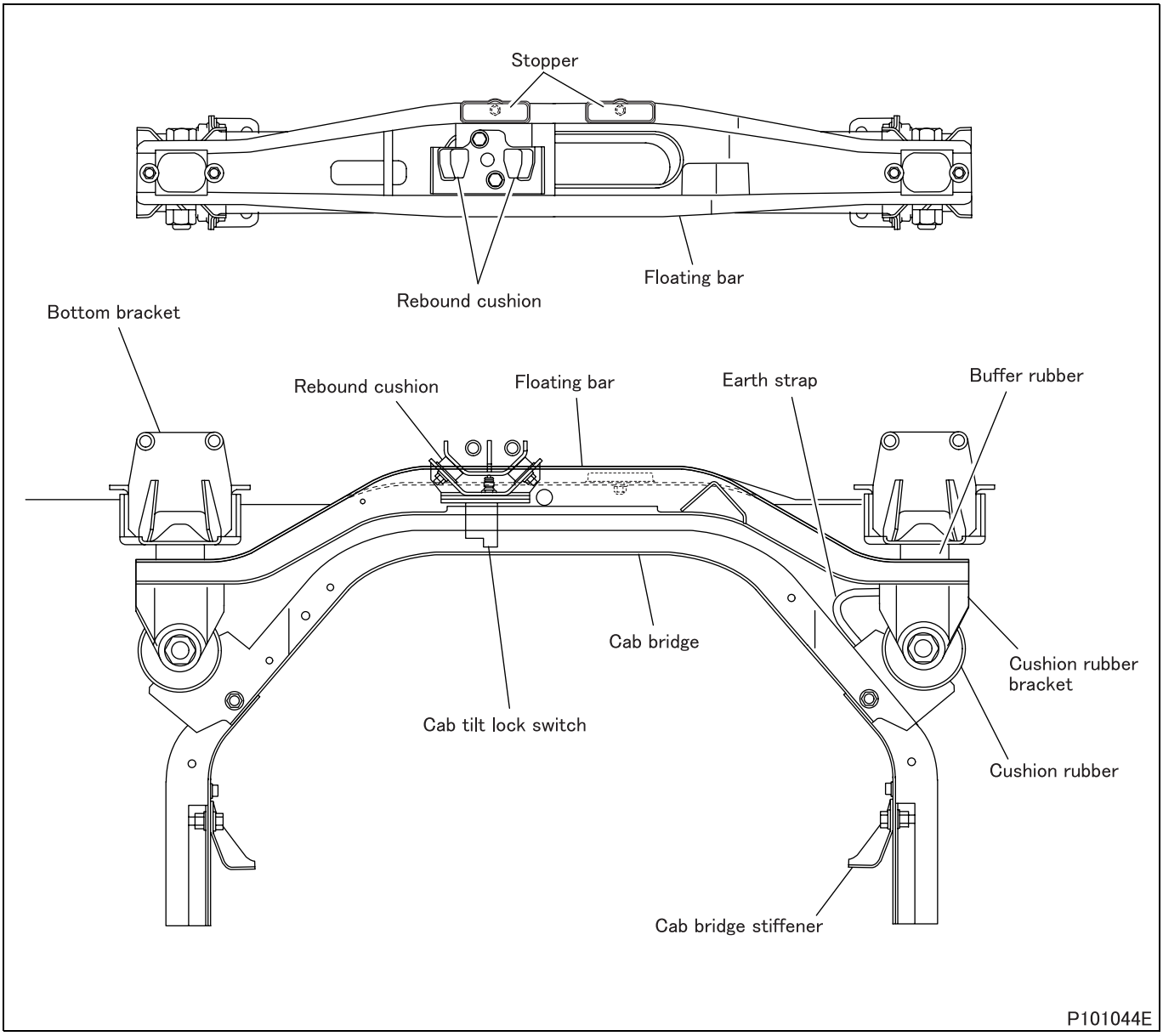

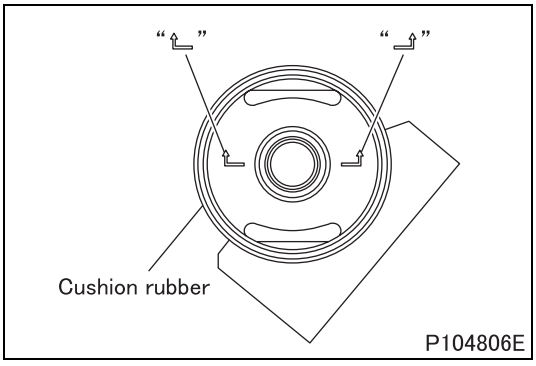

- Cushion rubbers have the identification mark showing the installing direction.

3. Cab Tilt Link

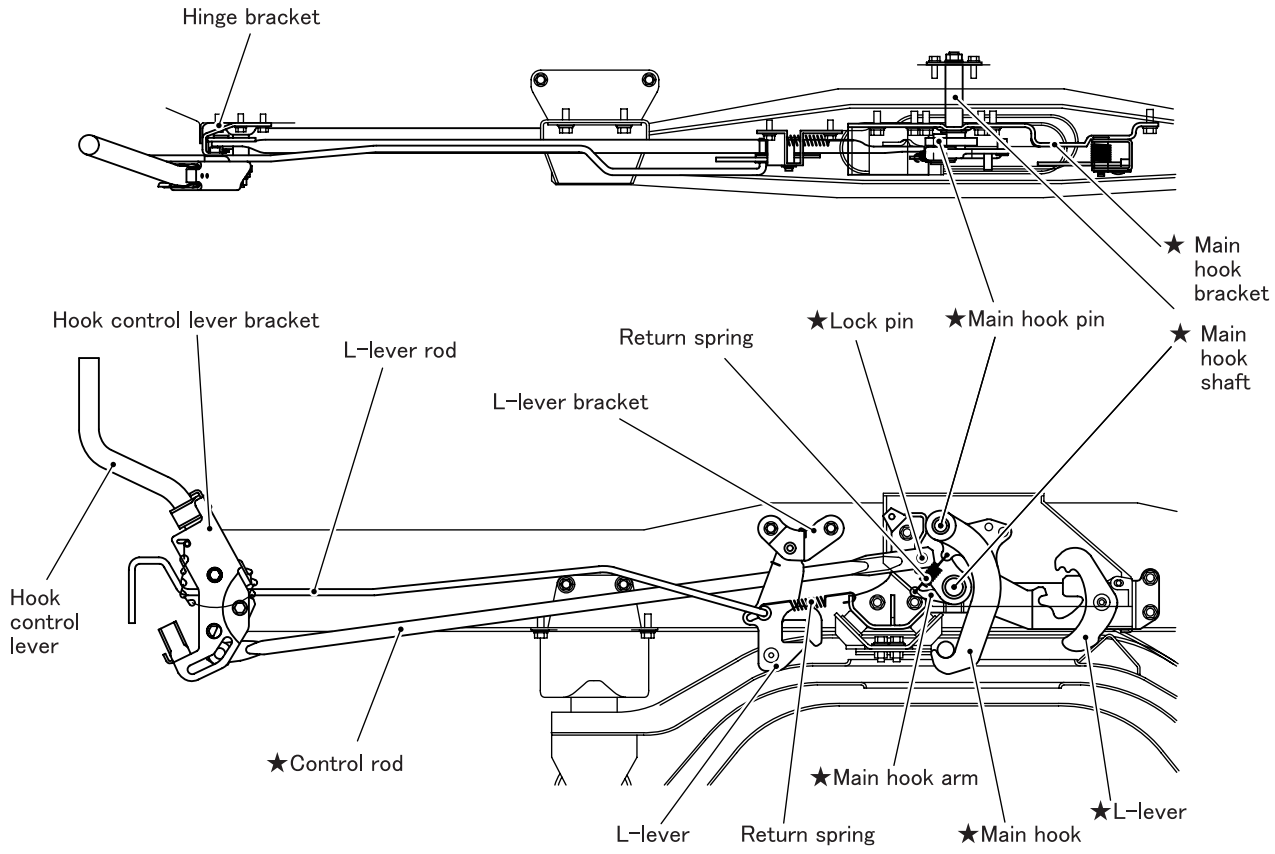

- Lock pin, main hook pin and main hook shaft all have their heads caulked after installation. Therefore, the parts marked with "★" which form a main hook assembly cannot be disassembled.

Cabs in general

Possible causes \ Symptoms			Cab shimmy (vibration accompanying pitching and rolling motions)	High-frequency vibration (above 20 Hz) and noise in cab and steering wheel	Reference Gr
Cab-related problems	Front cab mounting	Looseness and play in cab hinge caps, cab hinge brackets and attaching parts	O	O	
		Deterioration of cab hinge cushions	O		
	Rear cab mounting	Deterioration of buffer rubbers		O	
		Deterioration of cushion rubbers	O		
		Defective rebound cushions or improperly installed side cushions or rebound cushions on bottom brackets	O	O	
	Improperly installed cab		O	O	

Possible causes \ Symptoms		Cab shimmy (vibration accompanying pitching and rolling motions)	High-frequency vibration (above 20 Hz) and noise in cab and steering wheel	Reference Gr
Engine-related problems	Too large propeller shaft inclination angle due to increased lean of engine following deterioration of engine mountings		O	Gr11
	Improper engine installation		O	
	Improper installation of intake and exhaust system components		O	
Transmission-related problems	Improper installation of transmission		O	Gr22
Propeller-shaft-related problems	Too large runout of propeller shaft		O	Gr25
	Too large wear of universal joint		O	
	Too large backlash in slip yoke joint splines		O	
	Too large play in center bearing		O	
	Too large angle at propeller shaft joint due to deterioration of center bearing rubber cushions or other causes		O	
	Too large angle at propeller shaft joint due to increased tilt of drive shafts because of excessive loading		O	
Front axle-related problems	Resonance occurring at axle seats	O		Gr26
Rear-axle-related problems	Improper meshing of reduction gears		O	Gr27
	Improper meshing of differential gears		O	
Wheel-and-tire-related problems	Excessive runout of wheel and tire	O		Gr31
	Imbalance of wheel and tire	O		
	Mixed use of tires different in size and type	O		
	Deformed wheel mounting surface	O		
Front-suspension-related problems	Too large friction between spring leaves	O		Gr33
Brake-related problems	Imbalance of brake drum	O		Gr26, Gr27
	Eccentric drum	O		

Manual cab tilt system

Symptoms / Possible causes	Cab does not tilt up	Cab cannot be locked in position on cab bridge	Cab tilt warning lamp fails to come on	Cab tilt warning lamp fails to go out	Reference Gr
Main hook fails to be released	O				
Damaged or fatigued torsion bar	O				
Torsion bar arm installed out of position	O				
Main hook failing to engage with hook pin bracket		O			
Poorly adjusted cab tilt lock switch			O	O	
Defective cab tilt lock switch			O	O	Gr54
Defective cab tilt warning lamp on meter cluster			O		
Blown fuse and/or high-current fuse			O		
Open or poorly connected wiring			O		

M E M O

REMOVAL AND INSTALLATION OF CAB

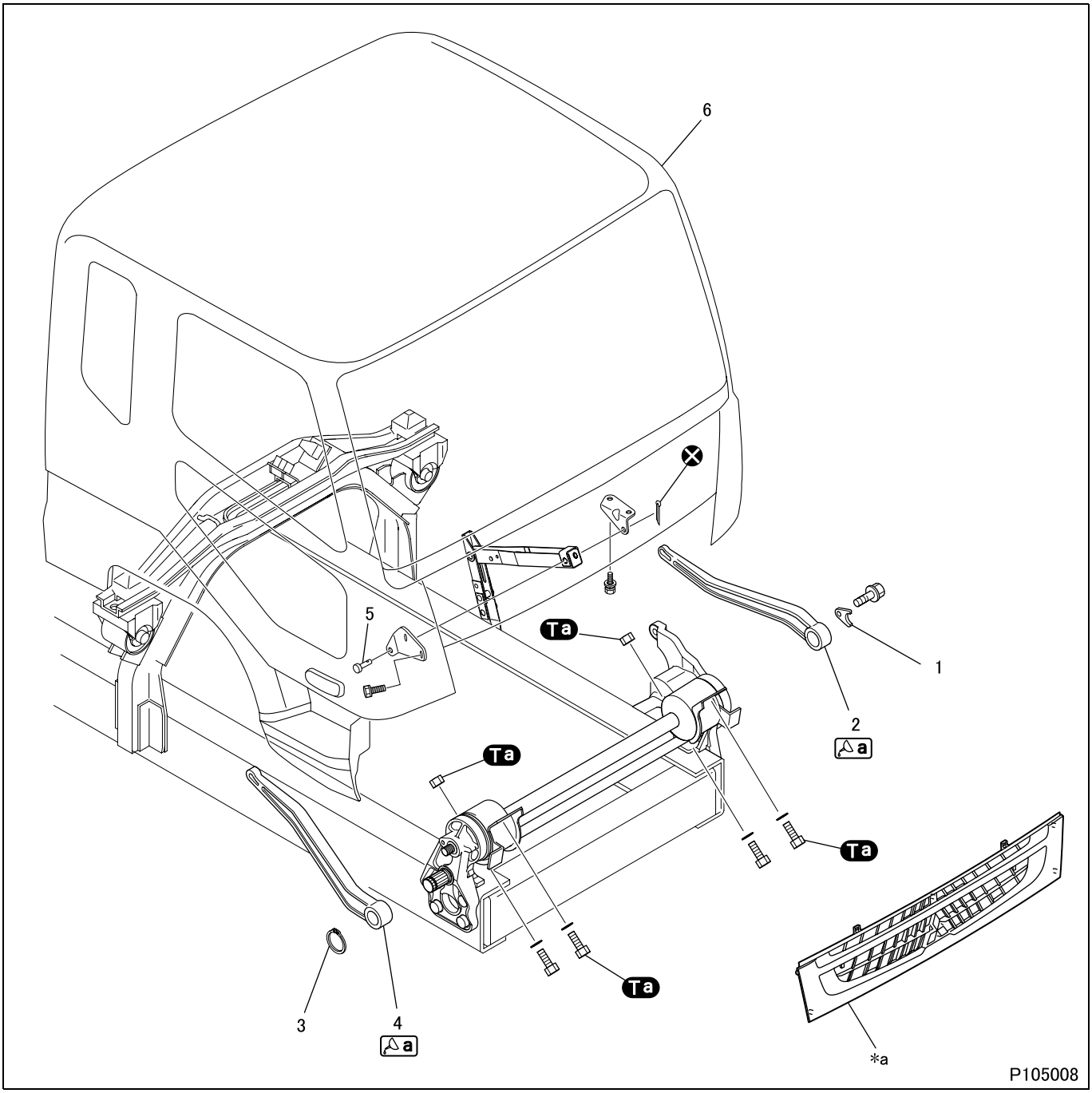

● **Removal sequence**

1 Stopper plate
2 Torsion bar arm, left-hand
3 Snap ring
4 Torsion bar arm, right-hand
5 Clevis pin
6 Cab

***a:** Front grille
⊗: Non-reusable parts

WARNING ⚠

- **During removal and installation of the cab, the parking brake is not available for holding the vehicle at a standstill. Therefore, be sure to apply chocks to the tires to ensure that the vehicle does not move.**
- **Never remove the chocks until all the operations are completed.**

CAUTION ⚠

- **During removal and installation of the cab, the cab stay should be set to over tilting state. Be sure to remove the radiator grille before the work to prevent damage to it.**

● Installation sequence

Follow the removal sequence in reverse.

Tightening torque (Unit: N·m {ft.lbs, kgf·m})

Mark	Parts to be tightened	Tightening torque	Remarks
Ta	Bolt (cab hinge cap installation)	120 to 170 {89 to 125, 12.0 to 17.0}	–
	Nut (cab hinge cap installation)		

Lubricant and/or sealant

Mark	Points of application	Specified lubricant and/or sealant	Quantity
a	Areas of torsion bar arms and torsion bar supports which make contact with each other	Chassis grease [NLGI No. 1 (Li soap)]	As required

◆Work before removal◆

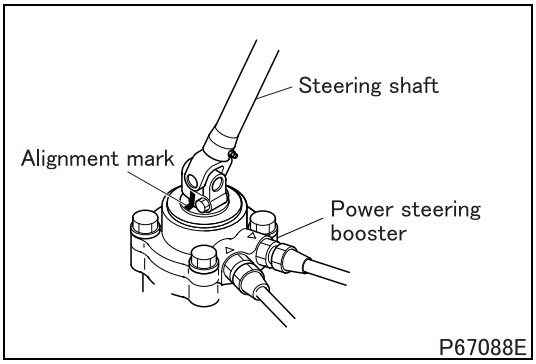

■ Alignment marks: Steering shaft and power steering booster

- With the cab tilted up in the normal tilting state, provide alignment marks on the steering shaft and power steering booster.
- Remove the steering shaft and bind it to the cab with a string or the like.

◆Removal procedure◆

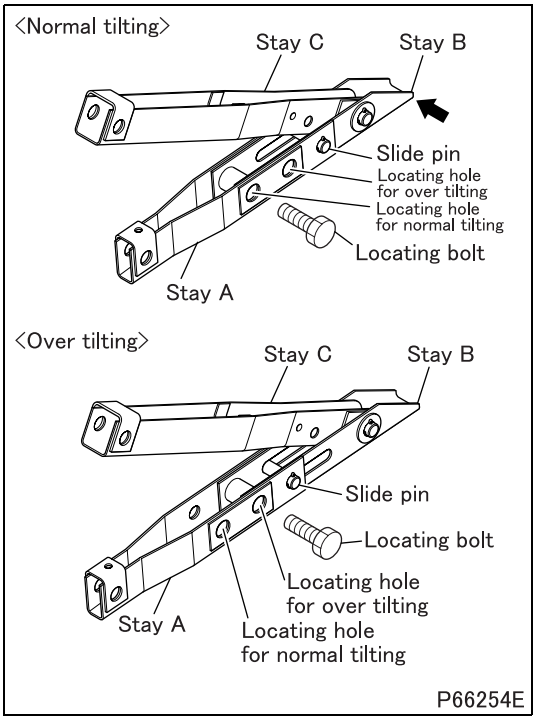

■ Removal: Cab

- Without the cab tilted up, change the state of the cab stays from normal tilting to over tilting by the following procedure.
  - Remove the locating bolt.
  - Slide the stay B by force in the illustrated direction.
  - Install the locating bolt in the locating hole for over tilting.

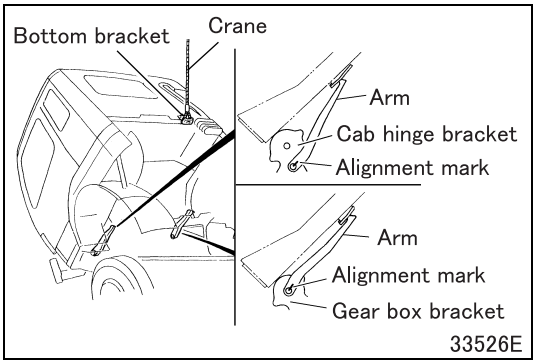

- With the cab tilted up, attach the wire rope to bottom bracket securely to enable the cab to be tilted down while being supported by crane.
- Make alignment marks on torsion bar arms, gear box bracket and cab hinge bracket, then remove the torsion bar arms.

WARNING ⚠

- **After torsion bar arms have been removed, be extremely careful as there is a risk of the cab falling down under its own weight.**

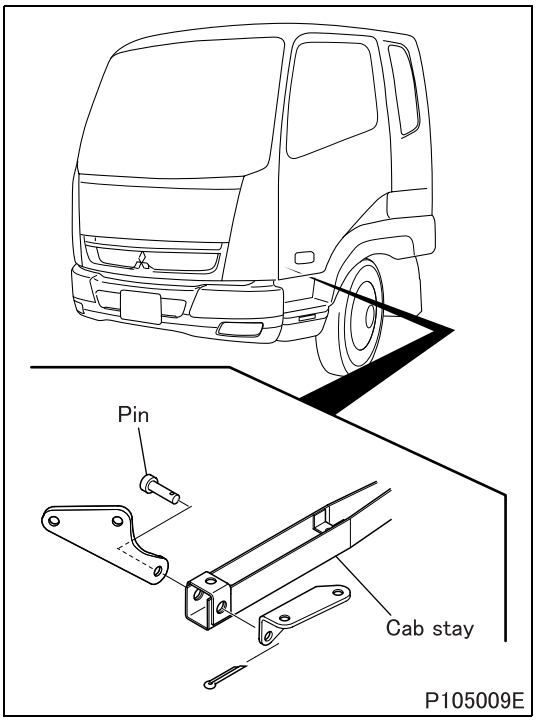

- Tilt down cab slowly while supporting it by the crane.
- Remove clevis pin to separate cab stay and cab.

WARNING ⚠

- **Never tilt up cab after clevis pin has been removed. Doing so is extremely dangerous as the cab will fall forward and down.**

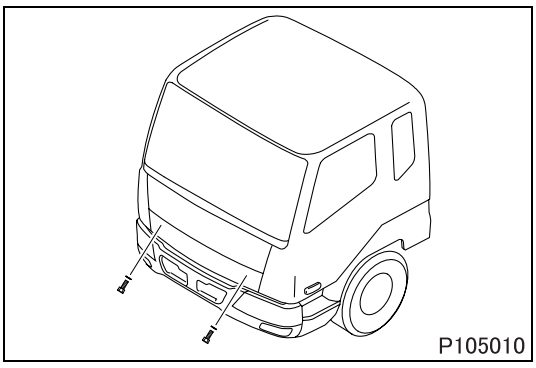

- From the front of the cab, remove the bolts attaching the cab hinge cushion.

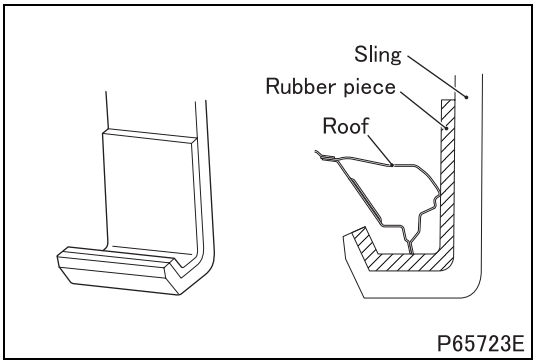

- Have ready cab sling like a one shown in the drawing.

CAUTION ⚠

- **Get ready a sling rigid enough to support the mass.**
- **Sling must be lined with rubber piece to prevent deformation of roof of the cab when the cab is lifted.**

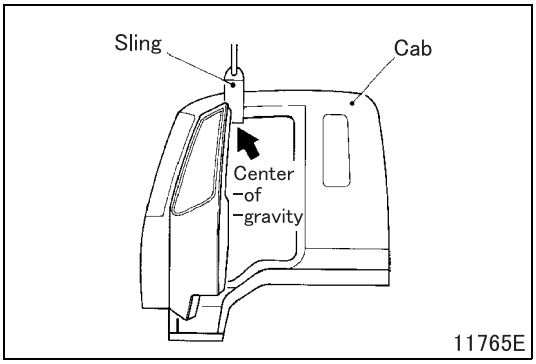

- Install sling at center-of-gravity of cab. To check the sling position, slightly lift the cab and see whether the cab remains horizontal. If necessary, adjust the sling position.

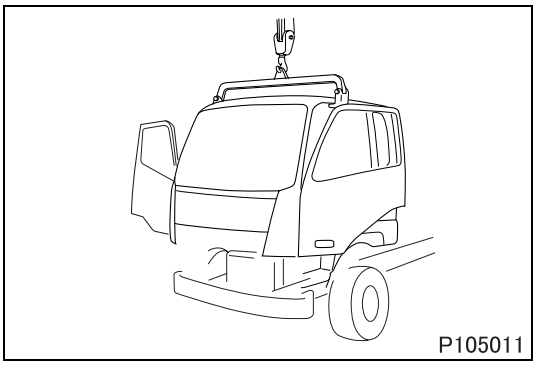

- Slowly lift the cab straight up.

WARNING ⚠

- **When cab is lifted, never get used under the cab.**
- **After cab has been slightly lifted, check to ensure that all the parts such as wires, cables and hoses have been completely disconnected.**

◆Installation procedure◆

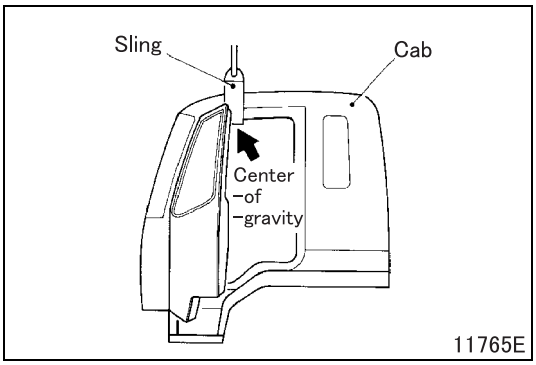

■ Installation: Cab

- Install sling at the center-of-gravity of cab.

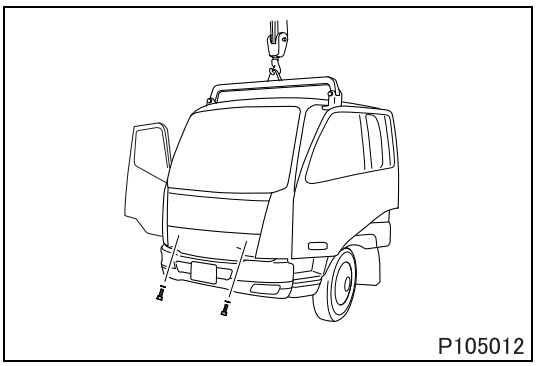
P105012

- Slowly lower cab further down until it is seated on the cab hinges. At this point, check for lateral alignment of the cab at the right and left cab hinges. If necessary, make adjustments for proper seating of the cab.
- Hold the cab hinge cushions with the bolts then remove the sling.

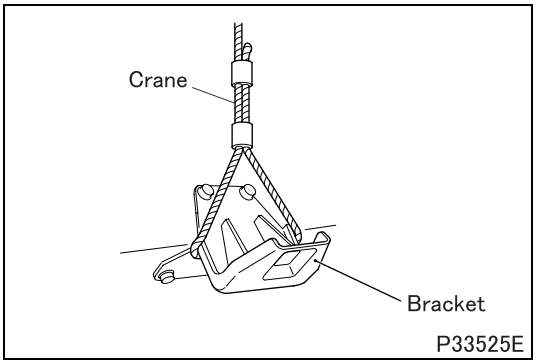

P33525E

- Attach the wire rope to bottom bracket securely to enable the cab to be tilted up in the later step using crane.

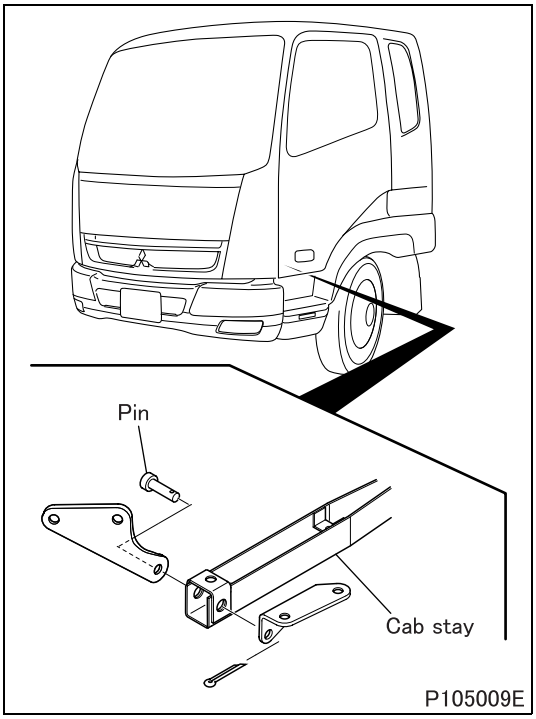

P105009E

- Link cab to cab stay by installing clevis pin. Install the cab stay in over tilting state.

WARNING ⚠

- **When cab is tilted using crane, be careful not to tilt more than necessary. Doing so is extremely dangerous as the cab will fall down forward.**

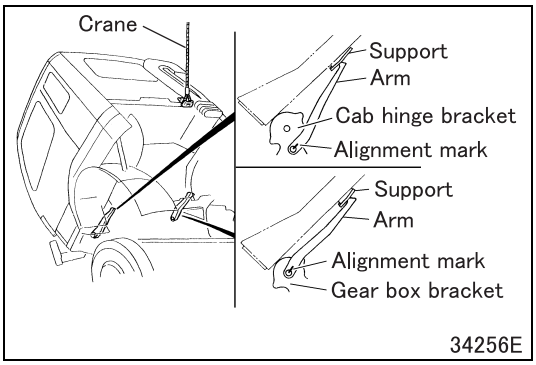

34256E

- Slowly tilt up cab using crane.
- Slowly tilt the cab fully down and securely lock the cab stay.
- Install torsion bar arms while aligning mating marks on them with those on cab hinge bracket and gear box bracket.
  If torsion bar supports were removed, install them after the torsion bar arms have been installed.
- Detach crane from the cab.

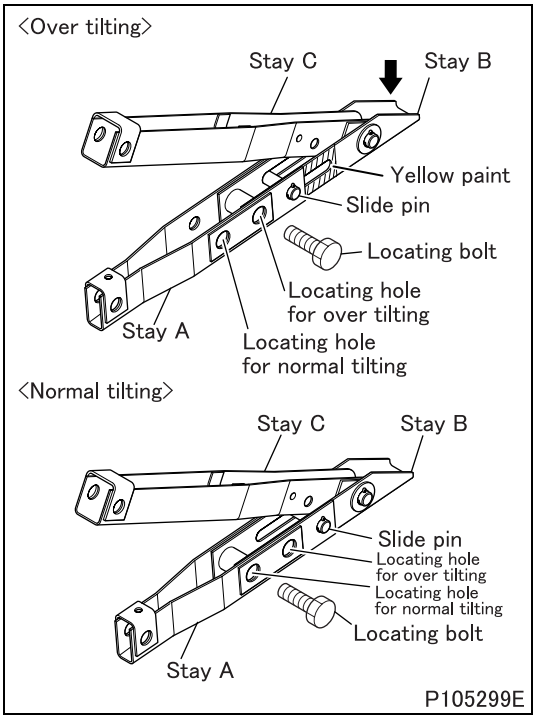

- With the cab tilted down, change the state of the cab stays from over tilting to normal tilting by the following procedure.
  - Remove the locating bolt.
  - Slide the stay B by force in the illustrated direction.
  - Install the locating bolt in the locating hole for normal tilting.
- Tilt up the cab in the normal tilting state. With their alignment marks in line, install the steering shaft to the power steering booster.

CAUTION ⚠

- **Never drive the vehicle with the cab stay in the over tilt position (yellow paint appears).**

FRONT CAB MOUNTING

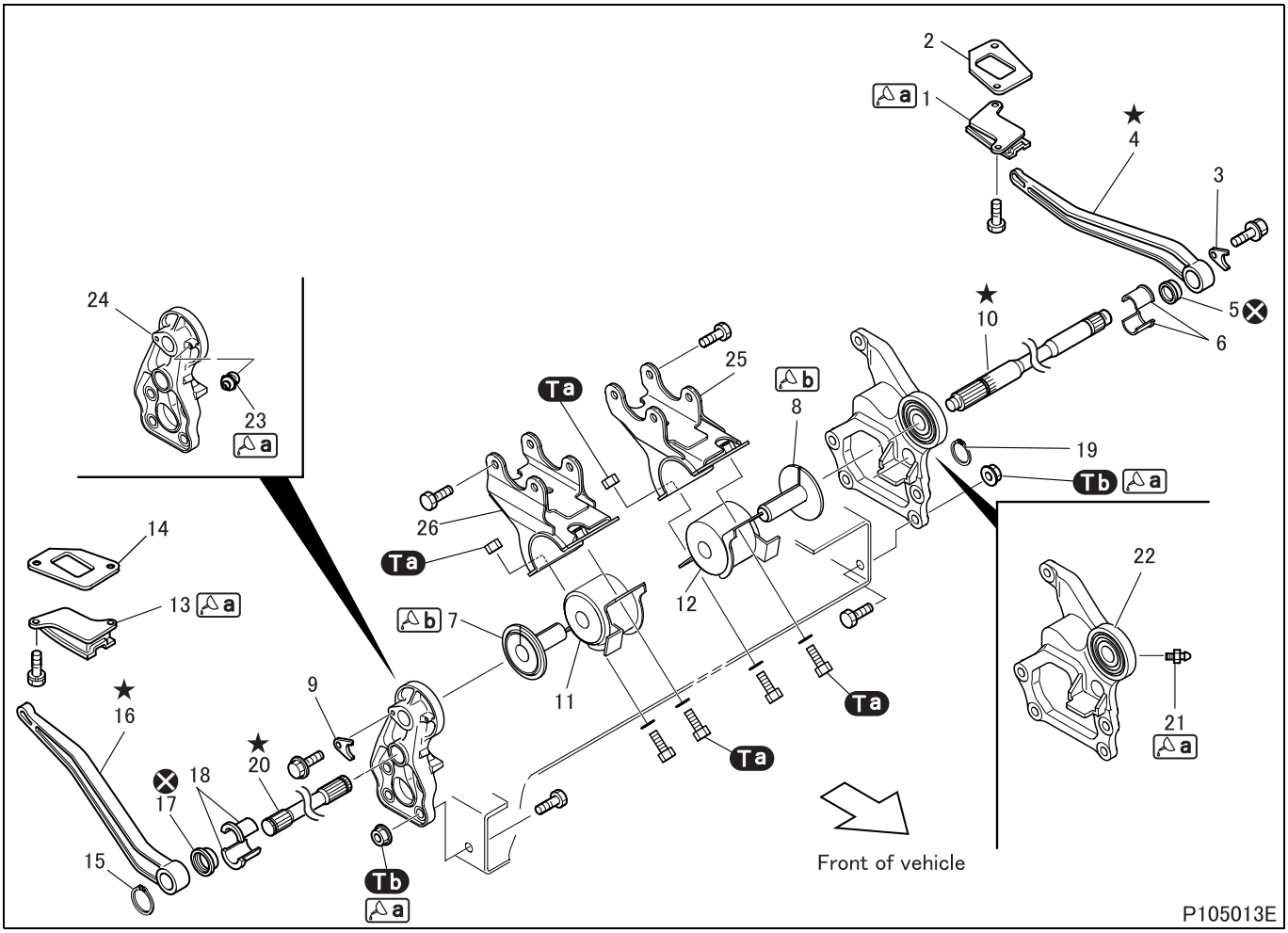

- Parts marked with "★" should be mounted when installing the cab. For assembly, see removal and installation of cab.

● Disassembly sequence

1 Torsion bar support
2 Shim
3 Stopper plate
4 Torsion bar arm, left-hand
5 Dust cover
6 Bushing
7 Cab hinge bushing
8 Cab hinge bushing
9 Stopper plate
10 Upper torsion bar
11 Cab hinge cushion
12 Cab hinge cushion
13 Torsion bar support
14 Shim
15 Snap ring
16 Torsion bar arm, right-hand
17 Dust cover
18 Bushing
19 Snap ring
20 Lower torsion bar
21 Grease nipple
22 Gear box bracket
23 Grease nipple
24 Cab hinge bracket
25 Cab hinge upper bracket
26 Cab hinge upper bracket

⊗: Non-reusable parts

- Shims may not have been installed.

● Assembly sequence

Follow the disassembly sequence in reverse.

Tightening torque (Unit: N·m {ft.lbs, kgf·m})

Mark	Parts to be tightened	Tightening torque	Remarks
Ta	Bolt (cab hinge cushion installation)	120 to 170 {89 to 125, 12.0 to 17.0}	–
	Nut (cab hinge cushion installation)		
Tb	Nut (gear box bracket installation)	240 to 290 {175 to 215, 24.0 to 30.0}	Wet
	Nut (cab hinge bracket installation)		

Lubricant and/or sealant

Mark	Points of application	Specified lubricant and/or sealant	Quantity
a	Torsion bar arm bearing surface of torsion bar support	Chassis grease [NLGI No. 1 (Li soap)]	As required
	Thread area of nut		
	Through grease nipple		
b	Connecting section of cab hinge bushing and cab hinge cushion	Rubber grease	

◆Removal procedure◆

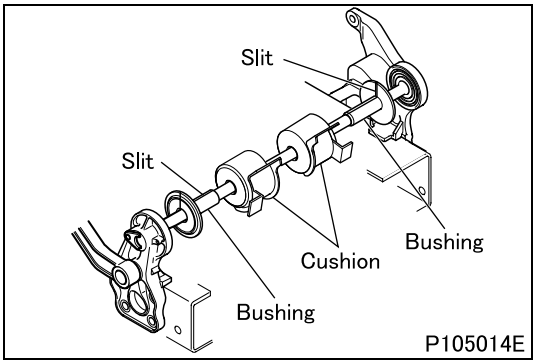

■ Removal: Cab hinge bushings

- Slide the cab hinge bushings to the center of the vehicle. Open the slits and remove the cab hinge bushings.

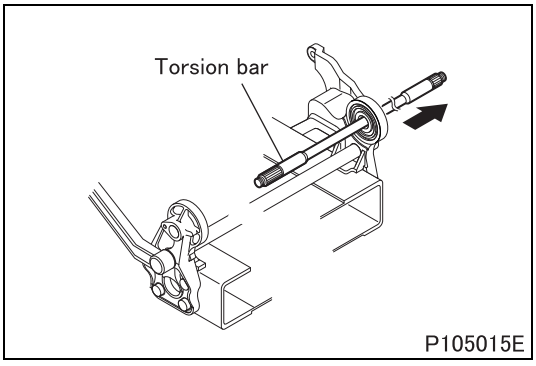

■ Removal: Upper torsion bar

- Remove upper torsion bar in the direction shown.

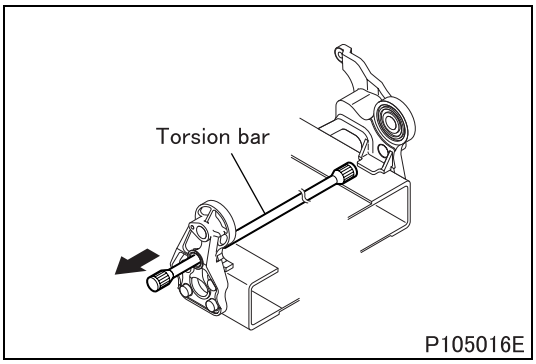

■ Removal: Lower torsion bar

- Remove lower torsion bar in the direction shown.

◆Installation procedure◆

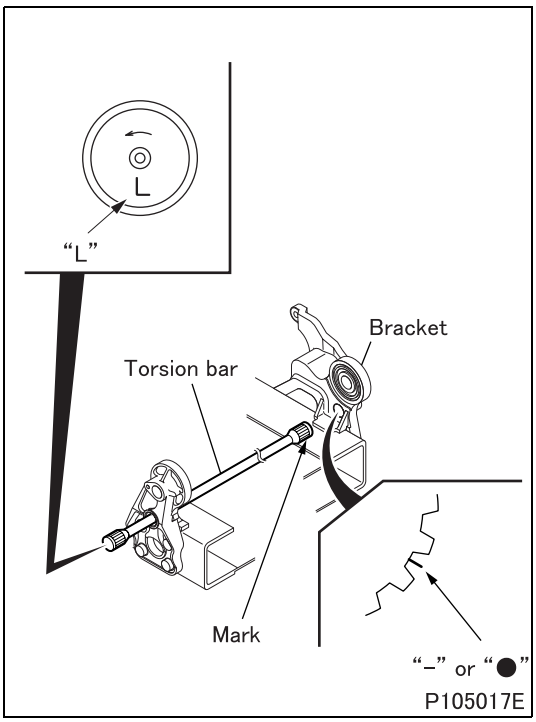

■ **Installation: Lower torsion bar**

- Install lower torsion bar onto gearbox bracket in the illustrate direction. Make sure that mark (white paint) on the bar is aligned with "–" or "● " mark on the gearbox bracket.

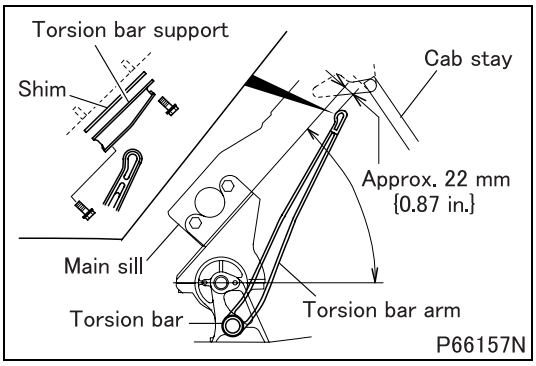

■ **Installation: Torsion bar arm, right-hand**

- Tilt the cab and support it with cab stay.
- Install torsion bar arm onto lower torsion bar such that clearance between the arm and cab main sill is as specified in the illustration.
- If the specified clearance cannot be obtained, adjust it using shim. Insert the shim between the cab main sill and torsion bar support when installing the support onto the sill.

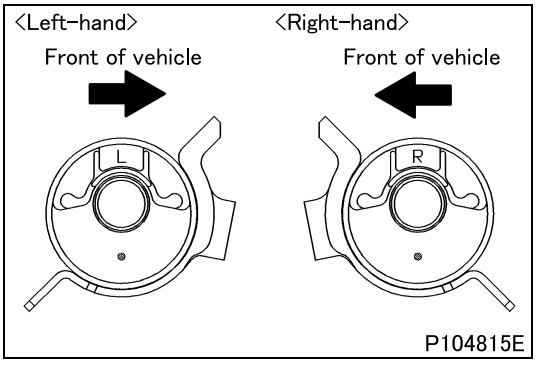

■ **Installation: Cab hinge cushion**

- Install cab hinge cushions in the illustrated direction after ensuring that there is no fluid leak.

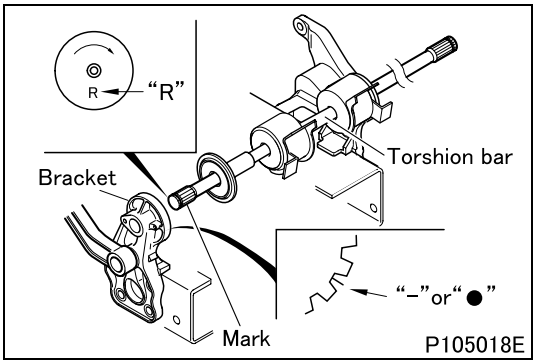

■ **Installation: Upper torsion bar**

- Install upper torsion bar onto cab hinge bracket in the illustrated direction. Make sure that mark (white paint) on the bar is aligned with "–" or "●" mark on the cab hinge bracket.

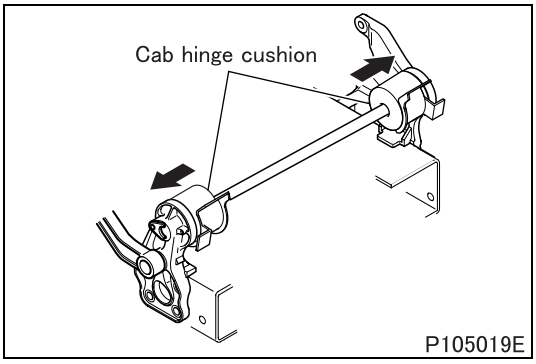

■ **Installation: Cab hinge cushion**

- Install the cab hinge cushions with pressing them against the outside of the vehicle.

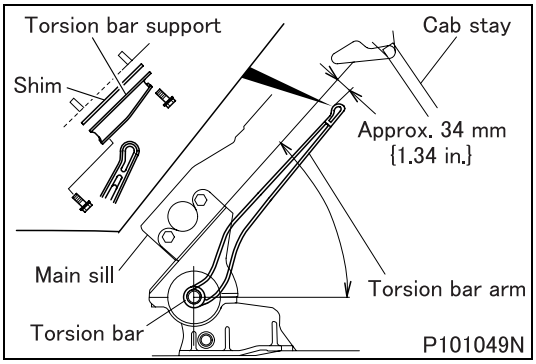

■ **Installation: Torsion bar arm, left-hand**

- Tilt the cab and support it with cab stay.
- Install torsion bar arm onto upper torsion bar such that clearance between the arm and cab main sill is as specified in the illustration.
- If the specified clearance cannot be obtained, adjust it using shim. Insert the shim between the cab main sill and torsion bar support when installing the support onto the sill.

REAR CAB MOUNTING

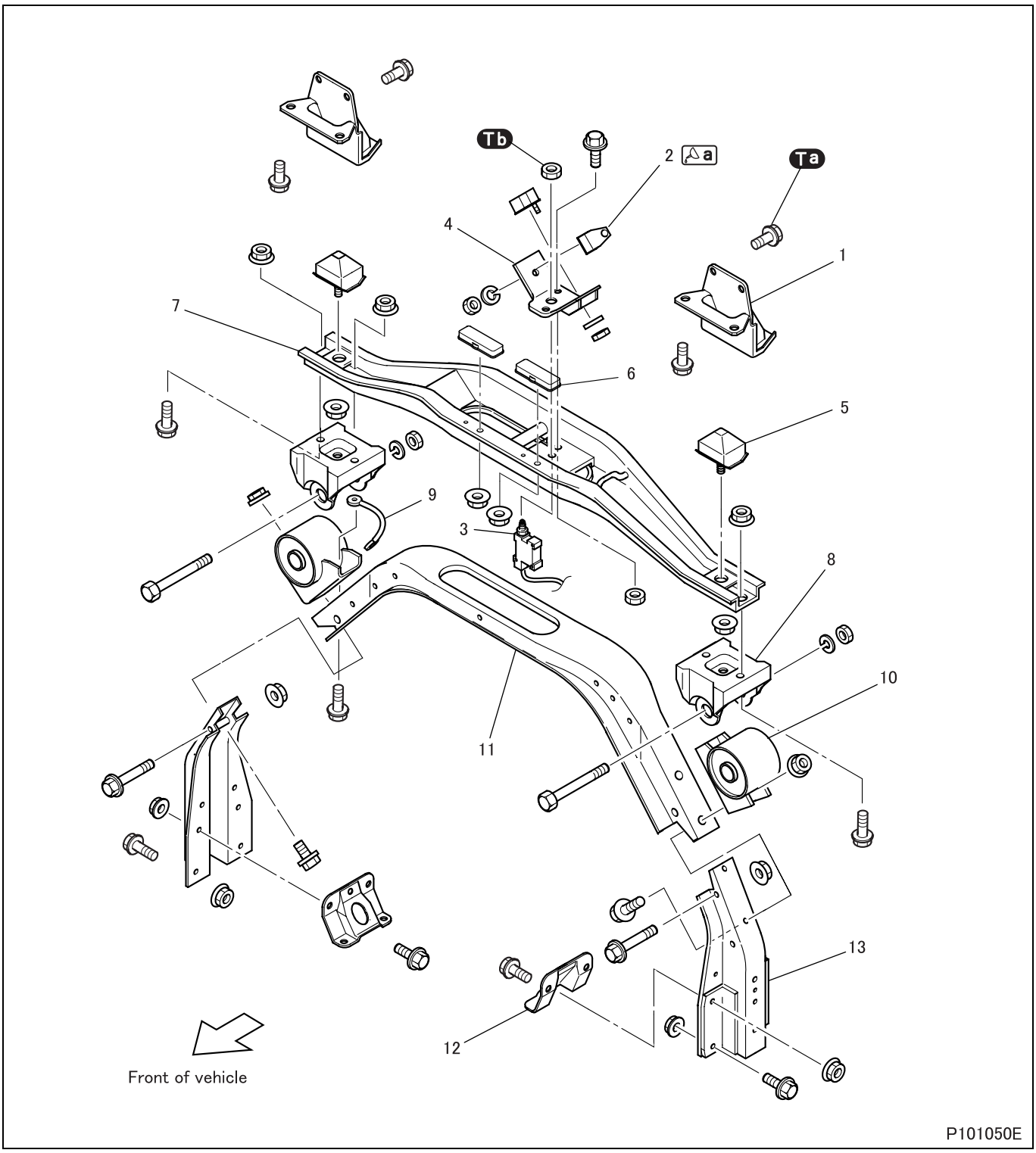

● **Disassembly sequence**

1 Bottom bracket
2 Rebound cushion
3 Cab tilt switch (See Gr54.)
4 Rebound cushion bracket
5 Buffer rubber
6 Stopper
7 Floating bar
8 Cushion rubber bracket
9 Earth strap
10 Cushion rubber
11 Center bridge
12 Cab bridge stiffener
13 Side bridge

● **Assembly sequence**

Follow the disassembly sequence in reverse.

Tightening torque (Unit: N·m {ft.lbs, kgf·m})

Mark	Parts to be tightened	Tightening torque	Remarks
Ta	Bolt (bottom bracket attaching)	34 to 54 {25 to 40, 3.5 to 5.3}	–
Tb	Nut (cab tilt switch attaching)	9.8 ± 2.0 {7.2 ± 1.5, 1.0 ± 0.2}	–

Lubricant and/or sealant

Mark	Points of application	Specified lubricant and/or sealant	Quantity
a	Contact surface with main hook of rebound cushion	Chassis grease [NLGI No. 1 (Li soap)]	As required

CAB TILT LINK

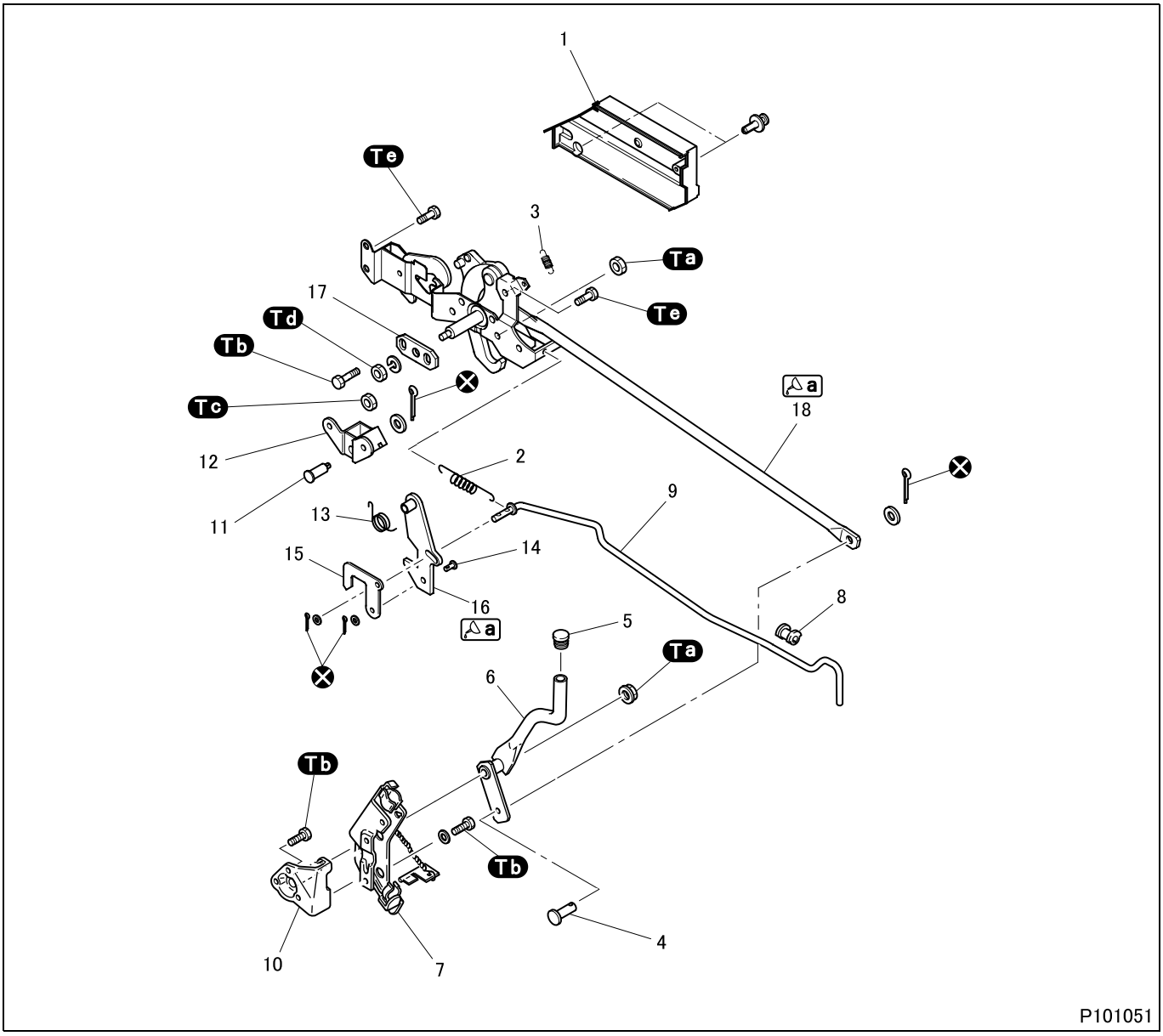

● **Disassembly sequence**

1 Main hook cover
2 Return spring
3 Return spring
4 Clevis pin
5 Plug
6 Hook control lever
7 Hook control lever bracket
8 Rubber sleeve
9 L-lever rod
10 Hinge bracket
11 Shaft
12 L-lever bracket
13 Return spring
14 Clevis pin
15 L-lever
16 L-lever
17 Holder plate
18 Main hook

⊗: Non-reusable parts

● **Assembly sequence**

Follow the disassembly sequence in reverse.

Tightening torque (Unit: N·m {ft.lbs, kgf·m})

Mark	Parts to be tightened	Tightening torque	Remarks
Ta	Nut (hook control lever attaching)	21 to 30 {15 to 22, 2.1 to 3.1}	–
	Nut (main hook attaching)		
Tb	Bolt (hook control lever bracket attaching)	9 to 14 {6.6 to 10, 0.9 to 1.4}	–
	Bolt (hinge bracket attaching)		
	Bolt (holder plate attaching)		
Tc	Nut (L-lever bracket attaching)	10 to 15 {74 to 11, 1 to 1.5}	–
Td	Nut (main hook attaching)	33 to 49 {24 to 36, 3.4 to 5}	–
Te	Bolt (main hook attaching)	34 to 54 {25 to 40, 3.5 to 5.5}	–

Lubricant and/or sealant

Mark	Points of application	Specified lubricant and/or sealant	Quantity
a	Contact surfaces of L-lever	Chassis grease [NLGI No. 1 (Li soap)]	As required
	Sliding surfaces of L-lever and L-lever rod		
	Main hook roller, sliding surface of main hook roller		
	Eyes at both ends of main hook control rod		
	Contact surfaces of main hook L-lever		

◆Inspection procedure◆

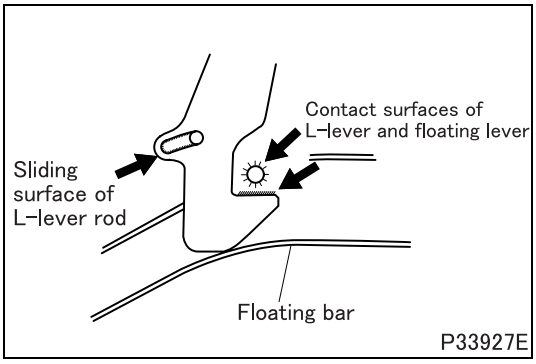

■ Inspection: Greasing of L-lever

- Carry out the inspection at the points shown in the illustration. If the greasing is insufficient, apply grease.

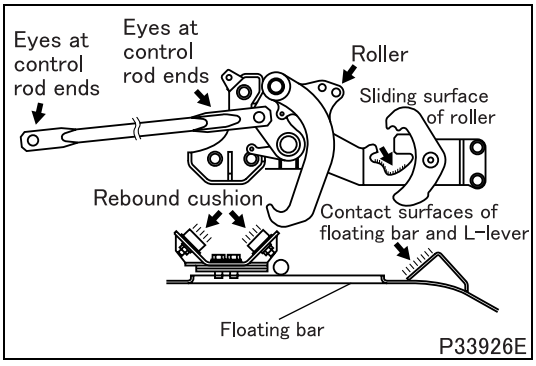

■ Inspection: Greasing of main hook

- Carry out the inspection at the points shown in the illustration. If the greasing is insufficient, apply grease.

CAB STAY

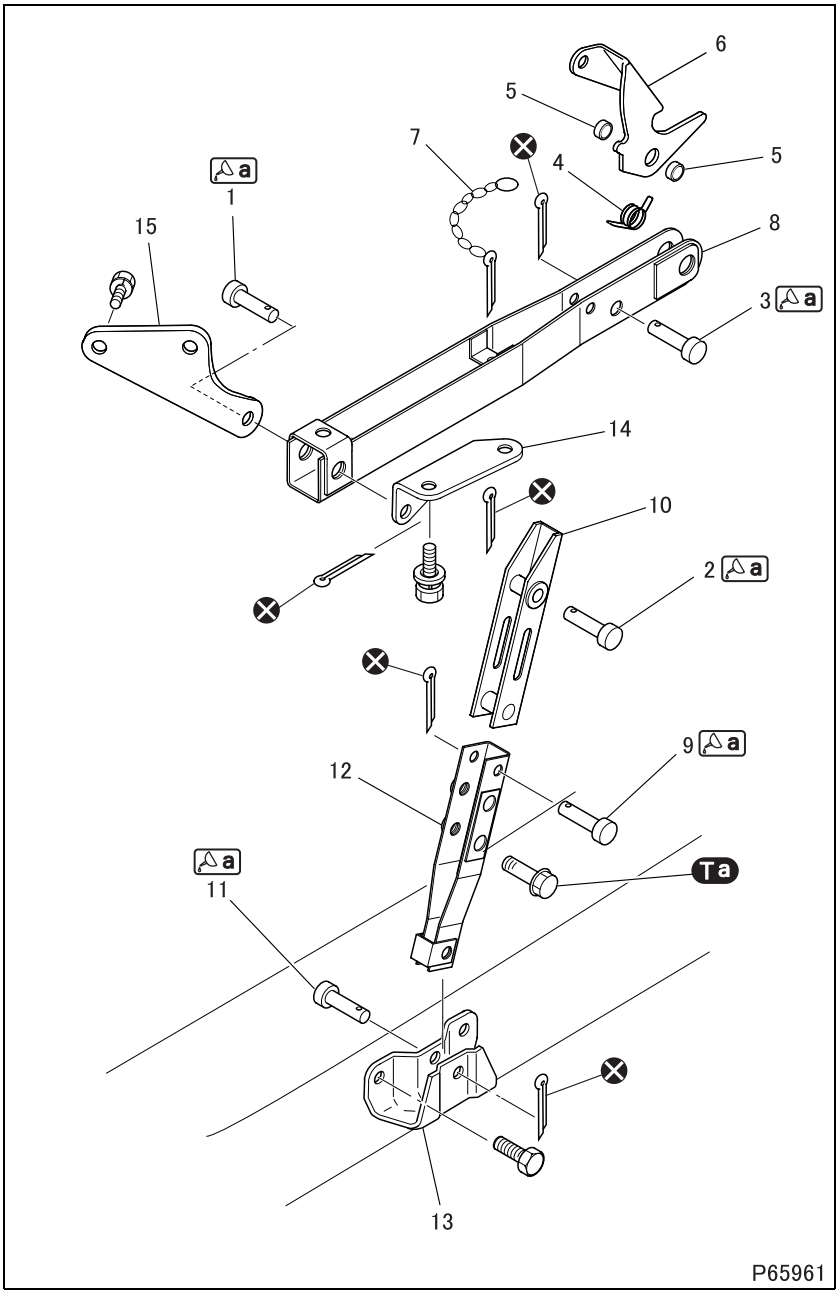

● **Disassembly sequence**

1 Clevis pin
2 Clevis pin
3 Clevis pin
4 Return spring
5 Spacer
6 Lock latch
7 Chain
8 Stay C
9 Clevis pin
10 Stay B
11 Clevis pin
12 Stay A
13 Lower bracket
14 Upper bracket
15 Upper bracket

⊗: Non-reusable parts

WARNING ⚠

- **Never remove the cab stay unless the cab is prevented from falling down by properly supporting it with a crane or other proper means.**

● **Assembly sequence**

Follow the disassembly sequence in reverse.

Tightening torque (Unit: N·m {ft.lbs, kgf·m})

Mark	Parts to be tightened	Tightening torque	Remarks
Ta	Bolt (stay B installation)	20 to 30 {15 to 22, 2.0 to 3.1}	–

Lubricant and/or sealant

Mark	Points of application	Specified lubricant and/or sealant	Quantity
a	Clevis pins	Chassis grease [NLGI No. 1 (Li soap)]	As required

Group 43

Door

Table of Contents

Back

Home

MITSUBISHI FUSO TRUCK OF AMERICA, Inc.

Pub.No.TWME0709-43

INDEX

SPECIFICATIONS 43-2

STRUCTURE AND OPERATION
- **1. Door Locking System 43-4**
- **2. Door Glass Opening System 43-5**

TROUBLESHOOTING 43-6

ON-VEHICLE INSPECTION AND ADJUSTMENT
- **1. Adjustment of Door Alignment 43-8**

DOOR 43-10

SPECIFICATIONS

Item		Specifications
Door	Door glass opening mechanism	Electrical control type
	Door lock type	Central door lock system

M E M O

1. Door Locking System

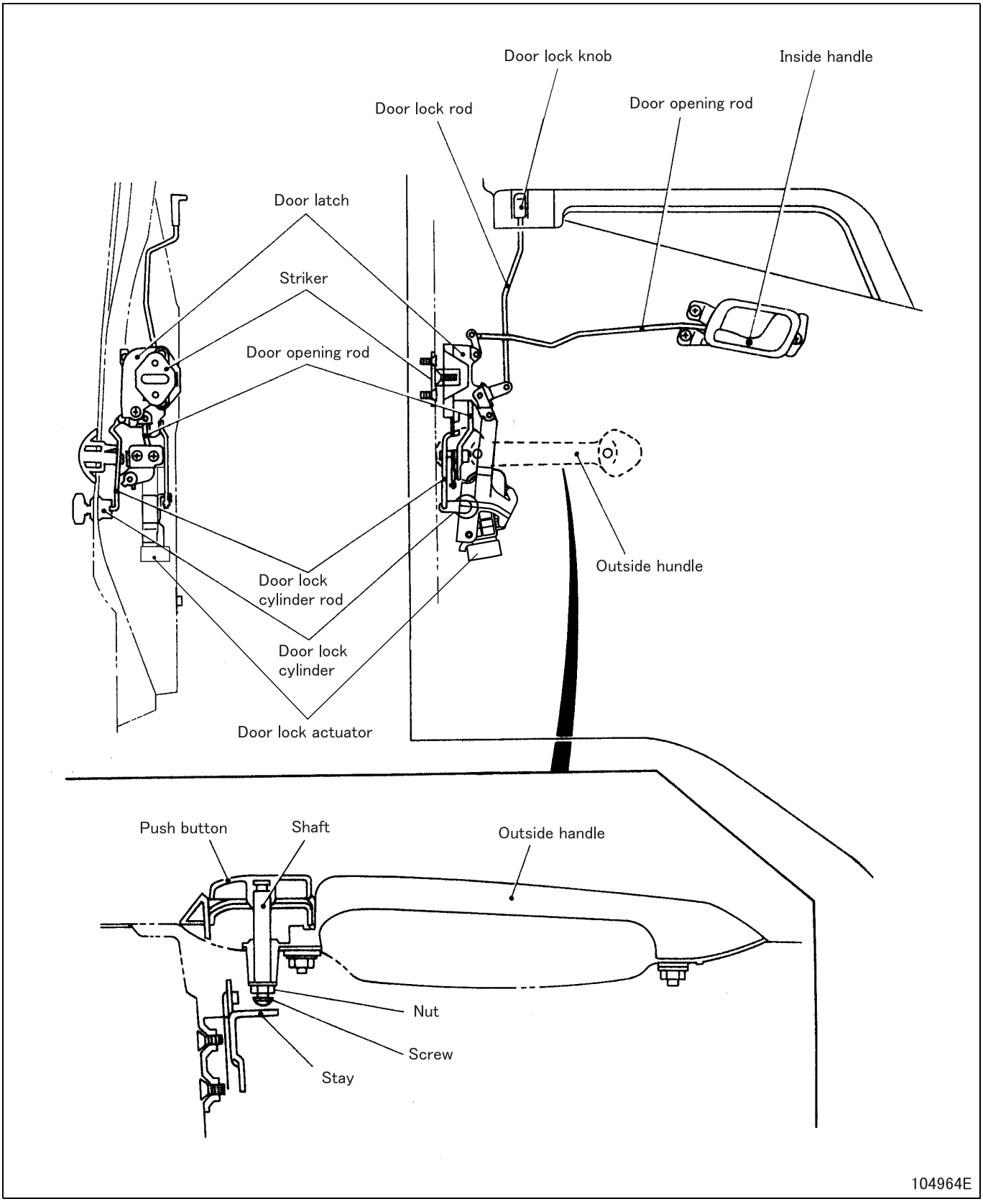

- Push button stroke of outside handle can be adjusted to optimize opening and closing of the door.
- To adjust the stroke, turn screw on shaft.
- The head of screw pushes stay, and this moves door opening rod, releasing door latch.

2. Door Glass Opening System

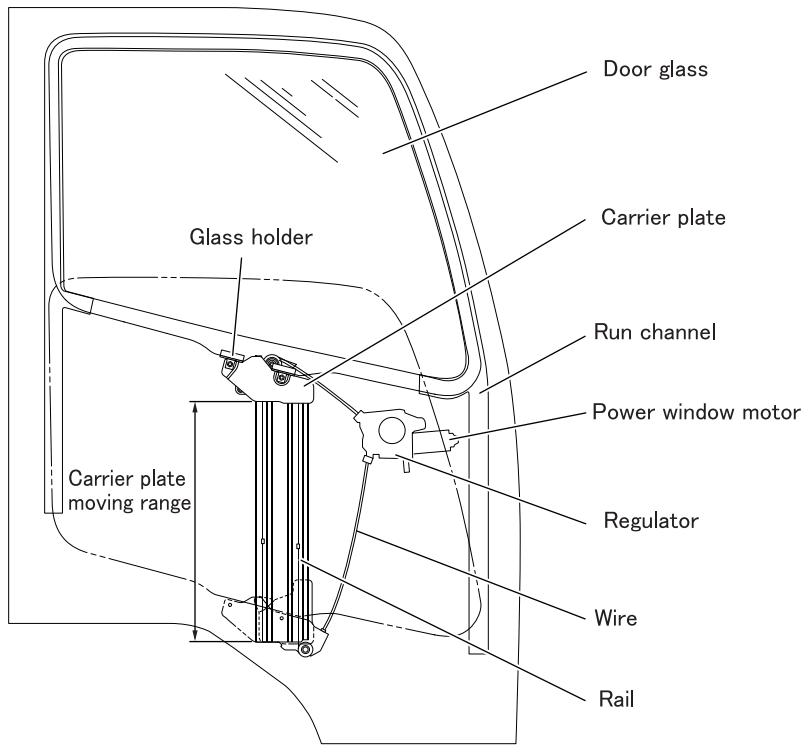

- Regulator is so constructed that it is interlocked with power window motor and carrier plate through wire.
- When power window motor is rotated, carrier plate is wound up or down by wire to raise or lower door glass.

Door Lock

Symptoms / Possible causes		Inside handle can not open door	Inside handle heavy to operate	Outer handle can not open door	Outer handle heavy to operate	Door does not open and close smoothly	Auto door lock system does not operate			Reference Gr
							Procedure by key	Procedure by door lock knob	Procedure by auto door lock switch	
Door setting out of adjustment			O		O	O				
Each door rod	Rod deformed		O		O					
	Rod out of position	O		O			O	O	O	
	Rod interference		O		O					
Door lock cylinder deformed or damaged							O			
Door lock switch defective									O	Gr54
Door lock actuator defective							O	O	O	
Door latch deformed or damaged			O		O	O				
Fuse of high current fuse blown							O	O	O	Gr54
Connector improperly connected, harness open-circuited, improperly grounded							O	O	O	
Battery capacity insufficient							O	O	O	
Power window and mirror electronic control unit defective							O	O	O	
Striker deformed		O		O		O				
Outer handle out of adjustment					O					

Power window

Symptoms / Possible causes	Door window glass falls of its own accord in cruising	Power window regulator generates strange sound in cruising	Power window does not operate	Power window does not stop	Power window generates strange sound when it operates	Power window switch does not perform automatic operation	Reference Gr
Power window switch defective			O	O		O	Gr54
Power window regulator defective	O		O	O	O		
Power window regulator improperly mounted					O		
Fuse or high current fuse blown			O				
Connector improperly connected, harness open-circuited, improperly grounded			O			O	
Power window and mirror electronic control unit defective			O	O		O	
Power window glass and door beltline molding unsteady		O					

ON-VEHICLE INSPECTION AND ADJUSTMENT

1. Adjustment of Door Alignment

Tightening torque (Unit: N·m {ft.lbs, kgf·m})

Mark	Parts to be tightened	Tightening torque	Remarks
–	Bolt (upper and lower hinge mounting)	17 to 26 {13 to 19, 1.7 to 2.6}	–
	Screw (striker mounting)	9 to 14 {6.6 to 10, 0.9 to 1.4}	–

- Door alignment is adjusted by changing the positions of the upper and lower hinges and striker.

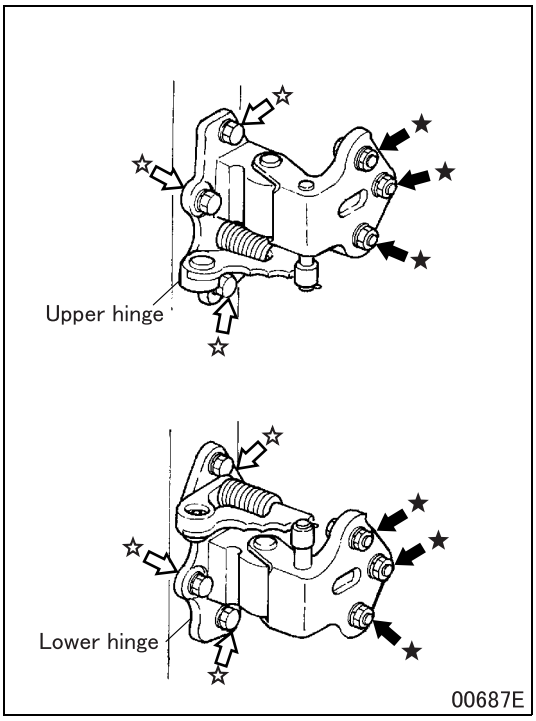

1.1 Adjustment of hinge positions

- Use ★ marked bolts to adjust gap.
- Use ☆ marked bolts to adjust flushness.

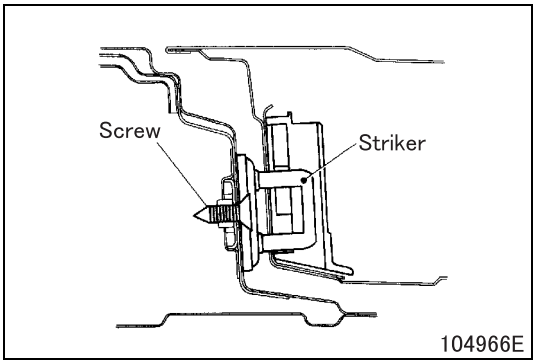

1.2 Adjustment of striker position

- Use mounting screw to make the adjustment.

1.3 Door alignment dimensions

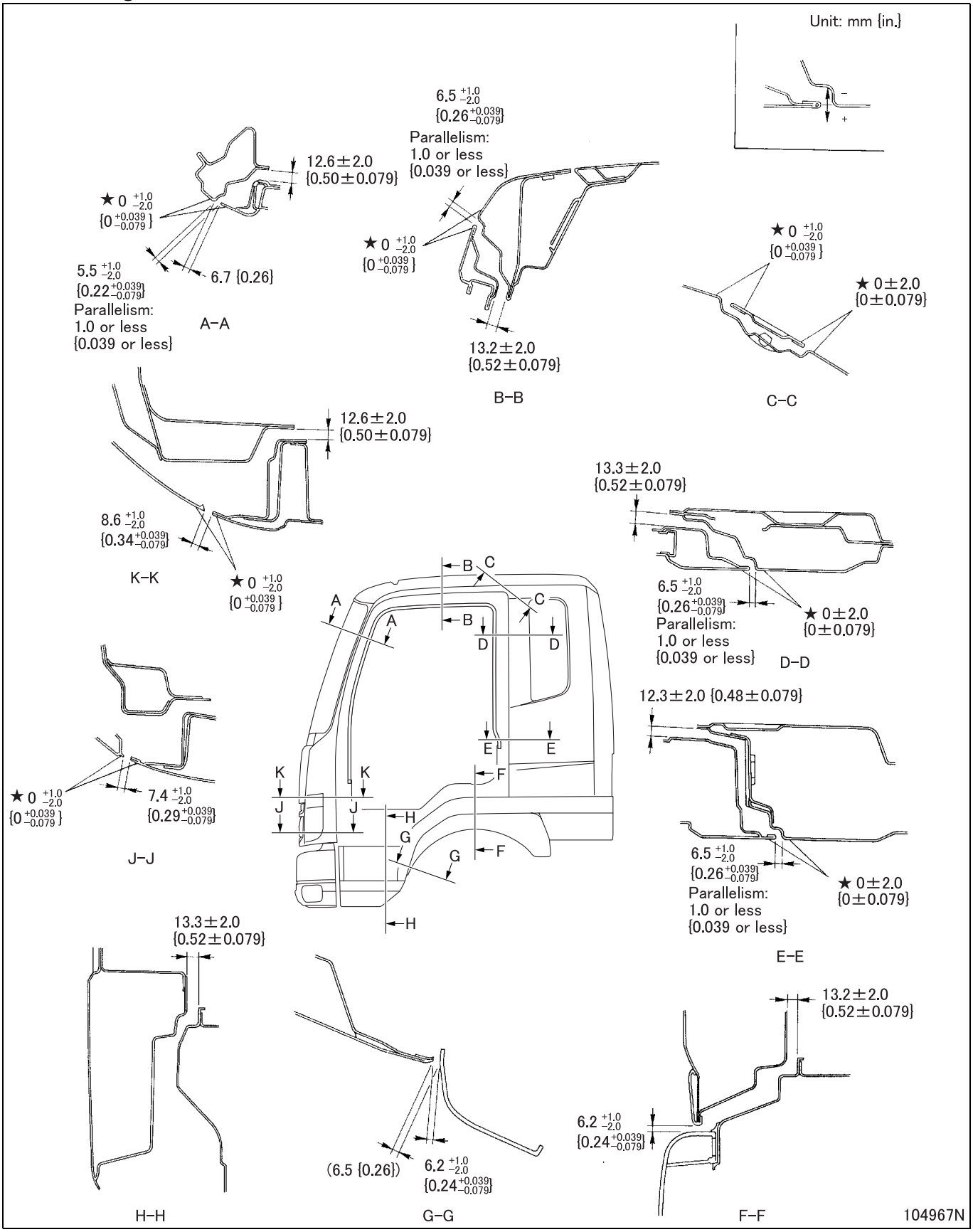

"★" shows step dimensions (shows a tolerance direction of step dimensions, + indicating the outside dimension and - indicating the inside dimension).
The figure inside the parentheses is a reference value.

Door Hinge and Striker

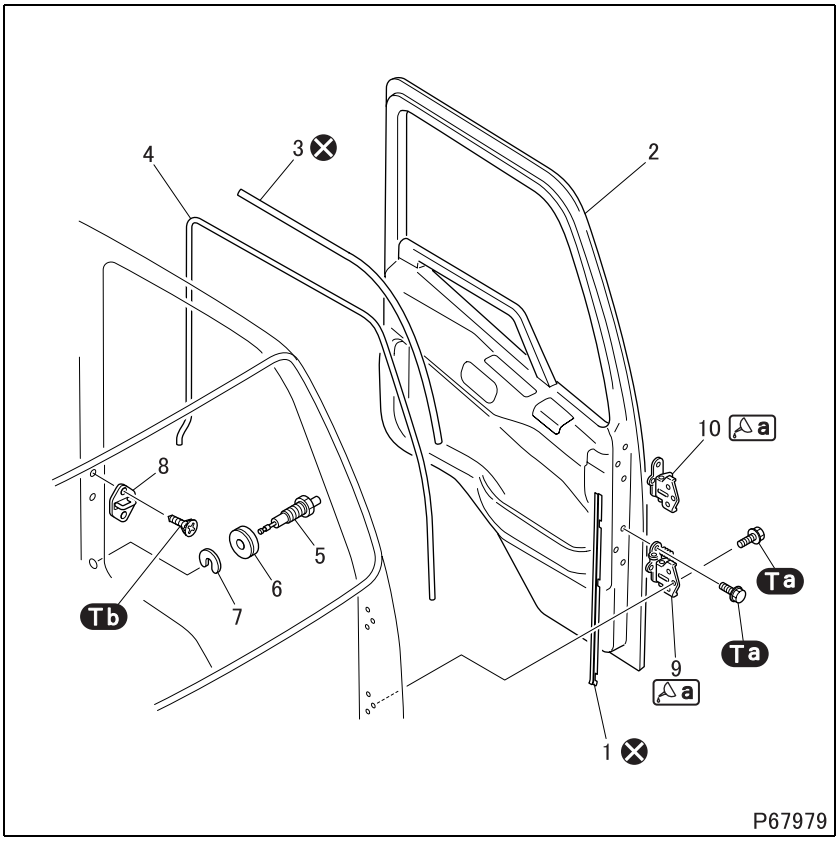

●Removal sequence

1 Outer weatherstrip
2 Door
(See later section.)
3 Roof side weatherstrip
4 Door opening inner weatherstrip
5 Door switch
6 Door switch cover
7 Shim
8 Striker
9 Lower hinge
10 Upper hinge

⊗: Non-reusable part

●Installation sequence

Follow the removal sequence in reverse.

- Adjust front door alignment after installation. (See ON-VEHICLE INSPECTION AND ADJUSTMENT.)

Tightening torque (Unit: N·m {ft.lbs, kgf·m})

Mark	Parts to be tightened	Tightening torque	Remarks
Ta	Bolt (door mounting)	17 to 26 {13 to 19, 1.7 to 2.6}	–
	Bolt (upper and lower hinge mounting)		
Tb	Screw (striker mounting)	9 to 14 {6.6 to 10, 0.9 to 1.4}	–

Lubricant and/or sealant

Mark	Points of application	Specified lubricant and/or sealant	Quantity
a	Rotating contact parts of upper and lower hinges	Chassis grease [NLGI No. 1 (Li soap)]	As required

◆Installation procedure◆

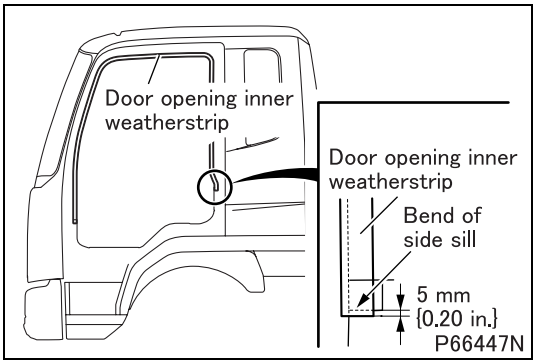

■Installation: Door opening inner weatherstrip

- Install the door opening inner weatherstrip to the cab starting from the position shown in the drawing (5 mm downward from the bend of side sill).

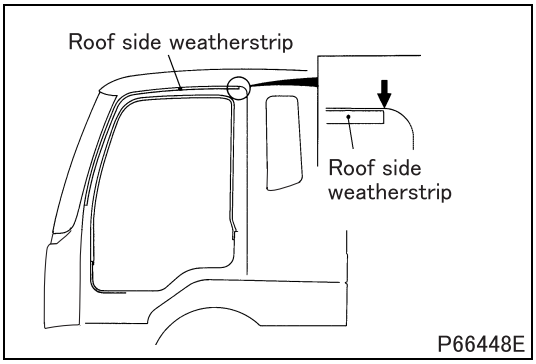

■**Installation: Roof side weatherstrip**

- Install the roof side weatherstrip to the cab starting from the arrow-marked position in the drawing.

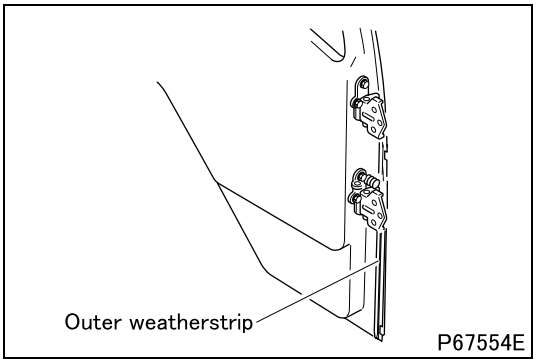

■**Installation: Outer weatherstrip**

- Install outer weatherstrip on the door starting from its bottom end.

◆**Adjustment after installation**◆

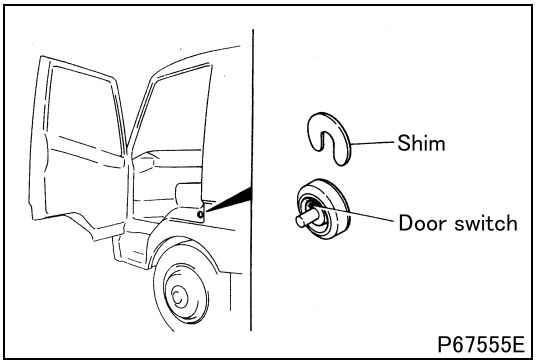

■**Adjustment: Door switch**

- If the door ajar warning lamp does not illuminate with the door opened ajar, reduce the number of shims to make the adjustment.
- If the door ajar warning lamp illuminates with the door fully closed, increase the number of shims to make the adjustment.
  Thickness of shim: 0.6 mm {0.024 in.}/piece

DOOR

Door

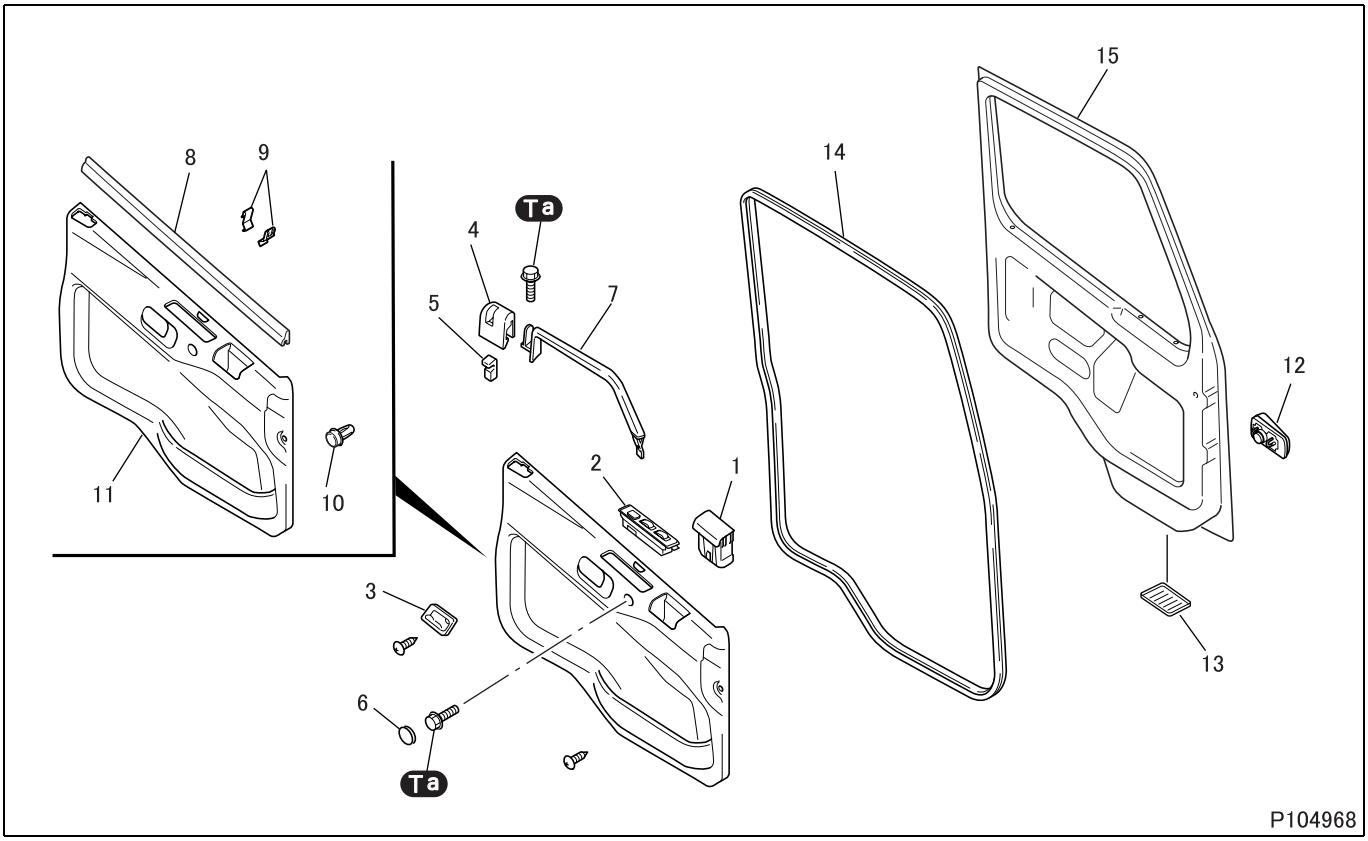

● **Disassembly sequence**

1 Ashtray
2 Power window switch
3 Inside handle cover
4 Door lock knob cover
5 Door lock knob
6 Plug
7 Door bar
8 Weatherstrip
9 Spring
10 Clip
11 Door trim
12 Front side turn signal lamp
13 Plug
14 Weatherstrip
15 Door panel (See later section.)

CAUTION ⚠

- **Do not remove weatherstrip unless abnormalities are found.**

● **Assembly sequence**

Follow the disassembly sequence in reverse.

Tightening torque (Unit: N·m {ft.lbs, kgf·m})

Mark	Parts to be tightened	Tightening torque	Remarks
Ta	Bolt (door bar mounting)	9 to 14 {6.6 to 10, 0.9 to 1.4}	–

◆Removal procedure◆

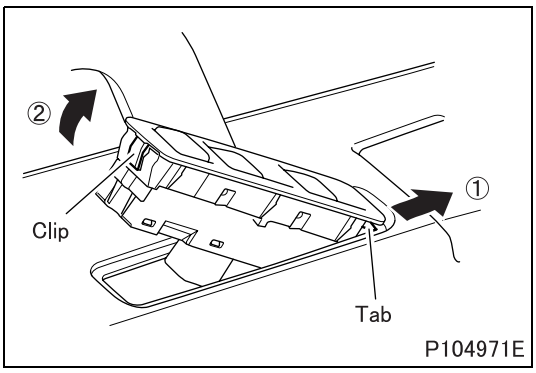

■**Removal: Power window switch**

- While pushing the power window switch toward the front 1 of the vehicle, raise 2 the rear end of the power window switch to remove.

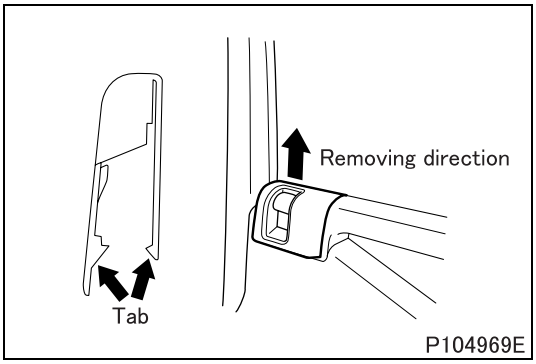

■**Removal: Door lock knob cover**

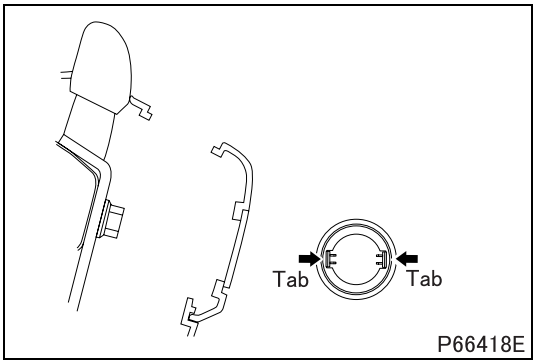

■**Removal: Plug**

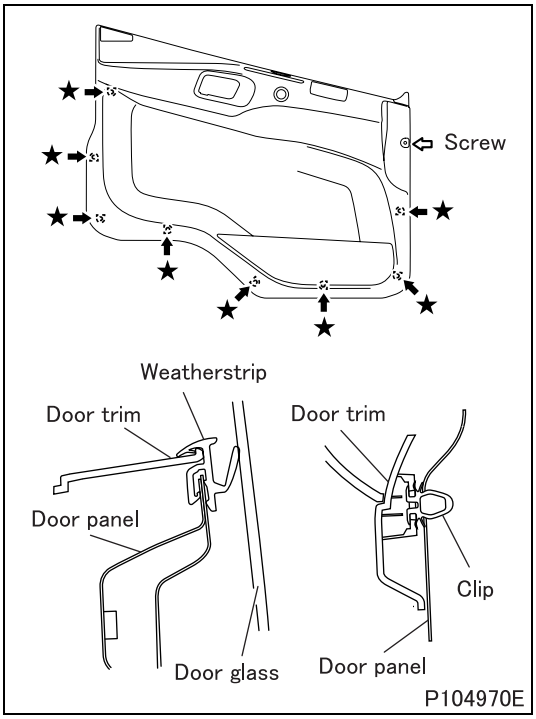

■**Removal: Door trim**

- Remove the screw (1 place).
- The door trim, which has clips on the back, is secured to the door panel in the illustrated position (8 places).
  Pull the area near these clips toward you by hand to remove the door trim from the door panel.

CAUTION ⚠

- **Be sure to pull the area near the clips toward you. Otherwise, it may damage the clip mounting portion of the door trim.**

- The door panel is fitted into the weatherstrip on the upper part. Remove the door trim while pushing it up.

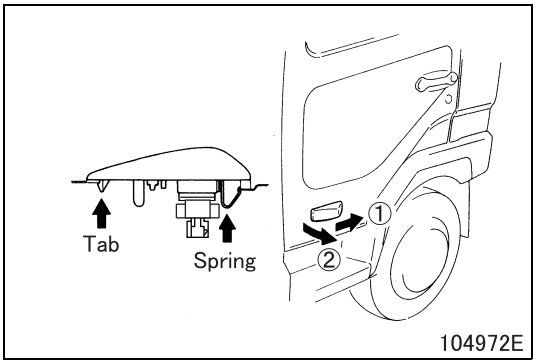

■**Removal: Front side turn signal lamp**

- Remove the front side turn signal lamp by pulling its front side in the direction 2 (toward you) while lifting it up in the direction 1 (rear of the vehicle).

◆**Installation procedure**◆

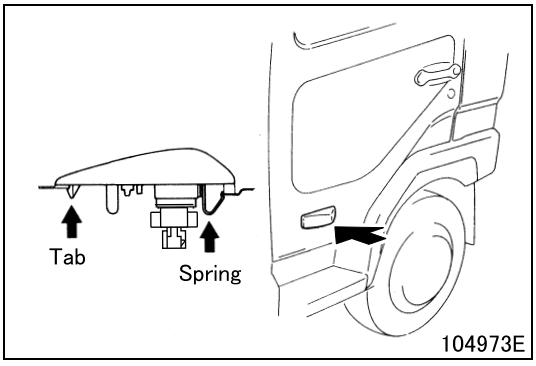

■**Installation: Front side turn signal lamp**

- Install the front side turn signal lamp with its tab engaged with the door panel and tapping on its spring side (rear of the vehicle) lightly to fit it into place.

■**Installation: Door trim**

- To install the door trim, follow the removal sequence in reverse. (See "■ **Removal: Door trim**".)

M E M O

Door panel

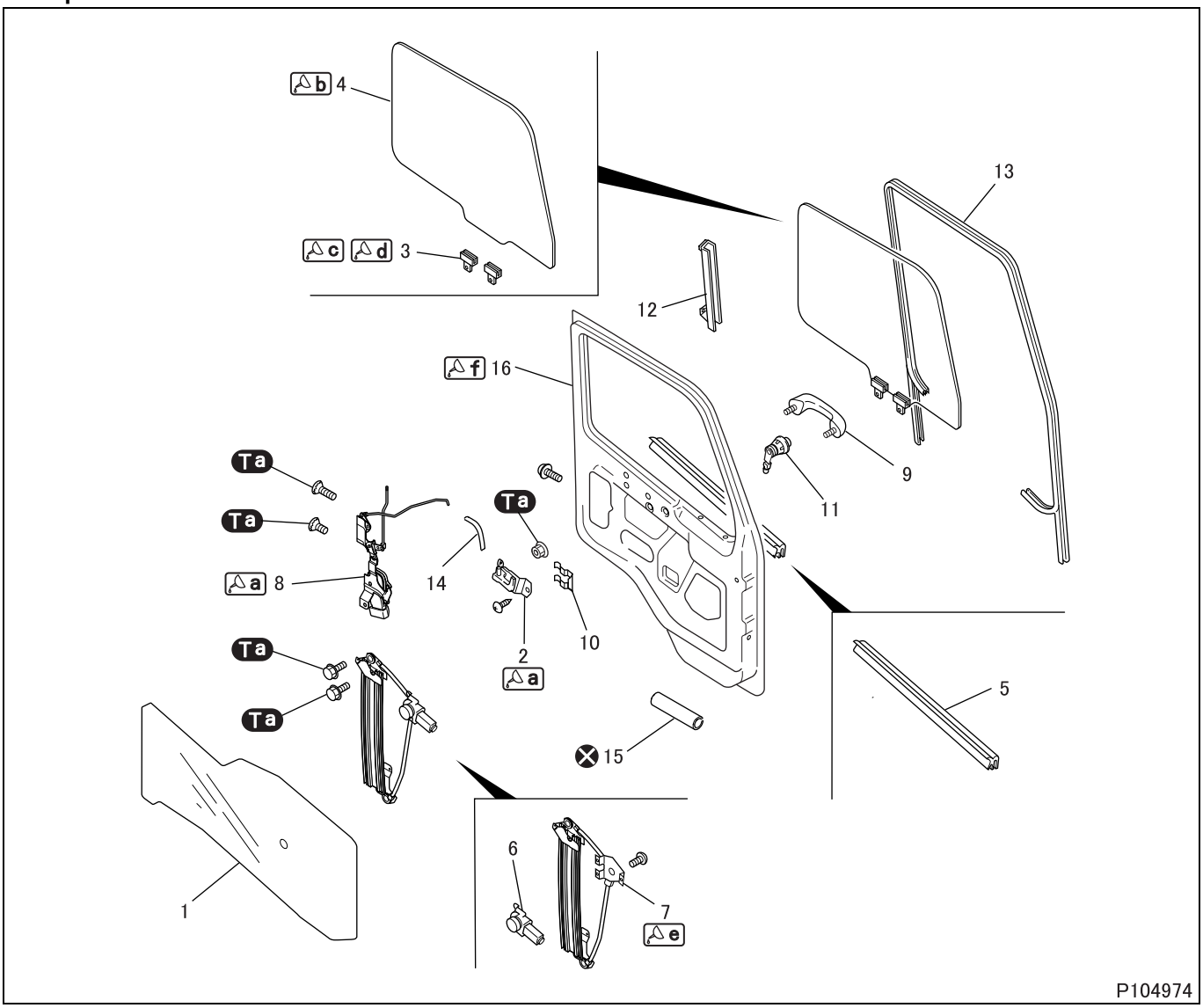

● **Disassembly sequence**

1 Waterproof cover
2 Inside handle
3 Glass holder
4 Door glass
5 Door belt line molding
6 Power window motor
7 Regulator & rail
8 Door lock actuator
9 Outside handle
10 Clip
11 Door lock cylinder
12 Lower sash
13 Run channel
14 Protector
15 Beam cushion
16 Door panel

CAUTION ⚠

- **Do not remove glass holder unless abnormalities are found.**

● **Assembly sequence**

Follow the disassembly sequence in reverse.

Tightening torque (Unit: N·m {ft.lbs, kgf·m})

Mark	Parts to be tightened	Tightening torque	Remarks
Ta	Bolt (door glass mounting)	4 to 6 {2.9 to 4.3, 0.4 to 0.6}	–
	Bolt (regulator & rail mounting)		
	Screw (door lock actuator mounting)		
	Nut (outside handle mounting)		

Lubricant and/or sealant

Mark	Points of application	Specified lubricant and/or sealant	Quantity
a	Rotating surface of inside handle	Multipurpose grease [NLGI No. 2 (Li soap)]	As required
	Sliding surface of door lock actuator		
b	Glass holder mounting surface of door glass	YH America Inc. G (MS-90) primer	As required
c	Door glass mounting surface of glass holder	YH America Inc. M (RC-50KE) primer	As required
d	Door glass mounting surface of glass holder (5 minutes after application of c)	YH America Inc. WS-70FK sealant (urethane base)	As required
e	Regulator sliding section of regulator & rail	Multipurpose grease [NLGI No. 1 (Li soap)]	As required
f	Waterproof cover installation surface of door panel	Butyl tape	As required

Special tools (Unit: mm {in.})

Mark	Tool name and shape	Part No.	Application
Ca	Door glass installation tool A: $5\ ^{+1}_{0}$ {$0.20\ ^{+0.039}_{0}$}	MK403871	Installation of door glass

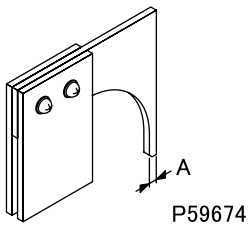

P59674

◆Removal procedure◆

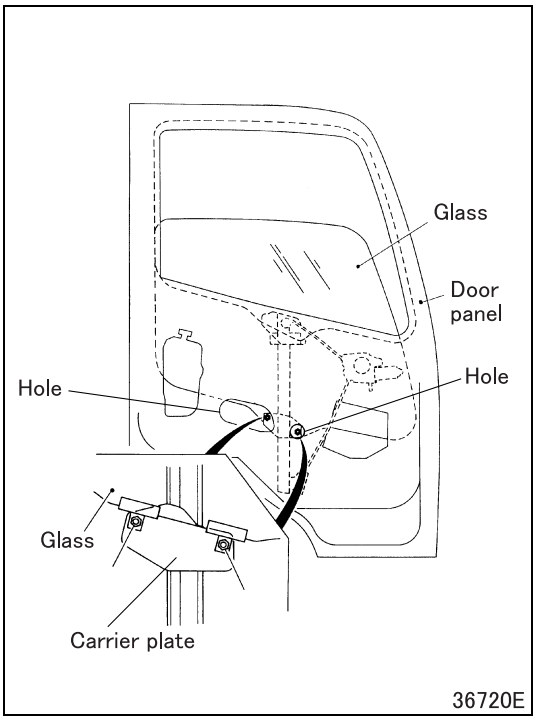

36720E

■ Removal: Door glass

- Move door glass until bolts of the door glass become visible through holes in the door panel.
- While supporting door glass by hand, remove bolts of carrier plate.
- Remove door glass through the open space in the door.

◆Installation procedure◆

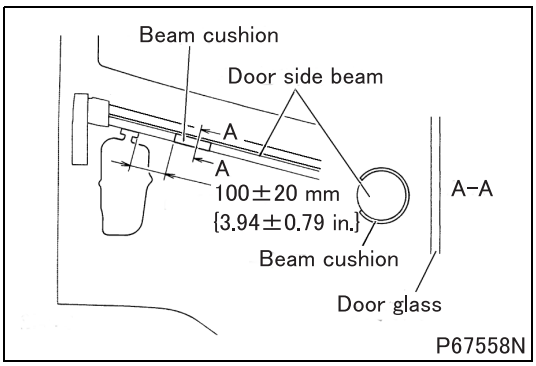

■ Installation: Beam cushion

- Install the beam cushion on the lower door side beam in the door panel in the illustrated direction.

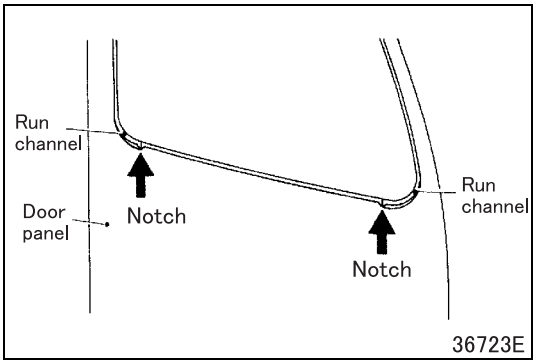

■ Installation: Run channel

- Install run channel by aligning it with notches on door panel.

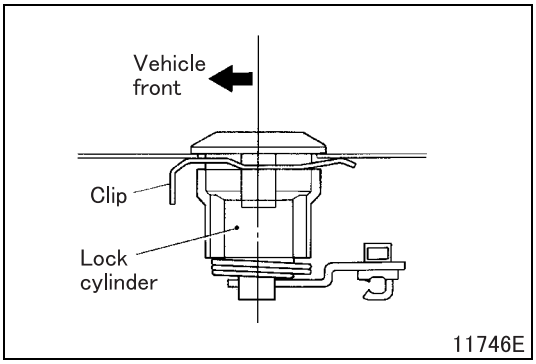

■ Installation: Door lock cylinder

- Install door lock cylinder with clip in the direction indicated in the illustration.

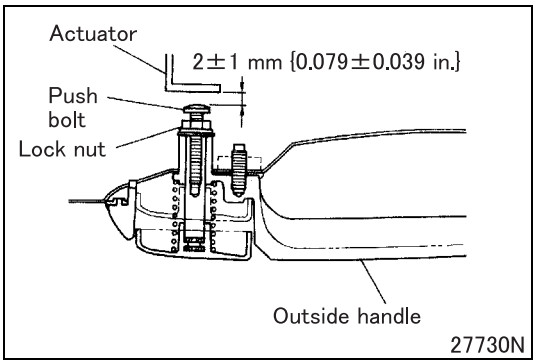

■ Installation: Outside handle

- Turn push bolt of outside handle to adjust the gap between the push bolt and door actuator as indicated in the illustration.

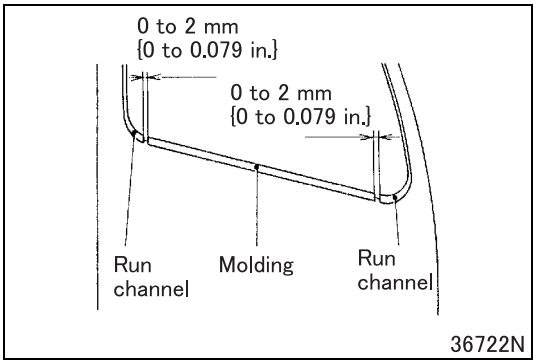

■ **Installation: Door belt line molding**

- Install door belt line molding so that gaps between the molding and run channel are as indicated in the illustration.

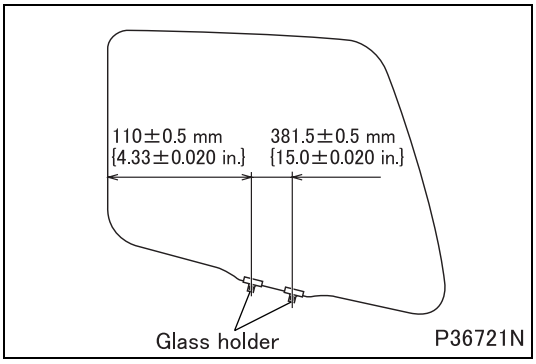

■ **Installation: Glass holder**

- Install glass holder to door glass at the location indicated in the illustration.

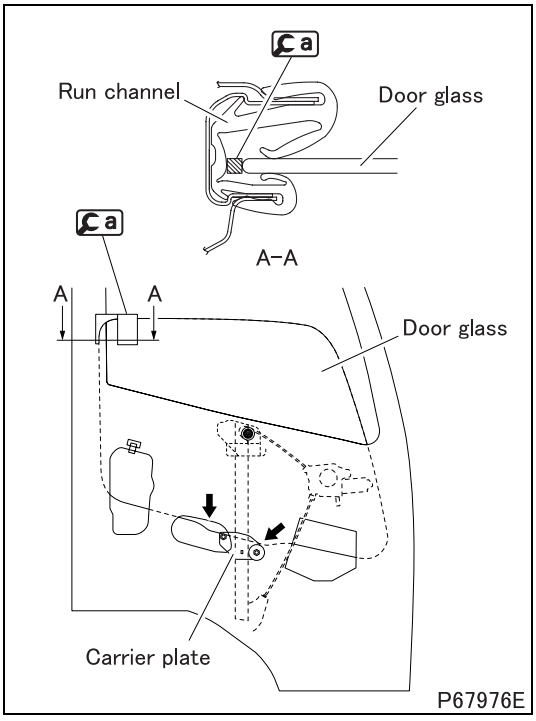

■ **Installation: Door glass**

- Move the carrier plate to the position where the door glass mount can be seen from the door panel holes (2 places indicated by arrow).
- Temporarily fasten the door glass to the carrier plate with bolts.
- Install [a] in the illustrated position of the door glass.
- Lightly push the door glass toward the rear of the vehicle and tighten the bolts to the specified torque while keeping door glass, [a] and run channel in close contact.

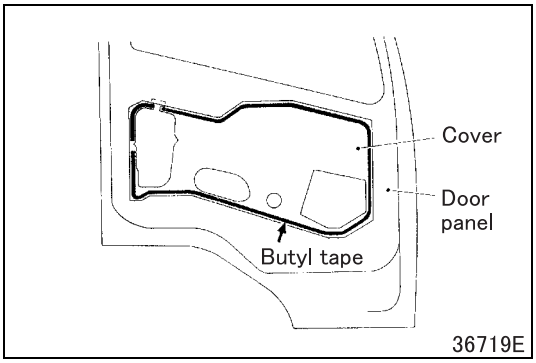

■ **Installation: Waterproof cover**

- Apply butyl tape to door panel, as indicated in the illustration.
- Install waterproof cover by pasting onto butyl tape.

Group 51

Exterior

Table of Contents

Back

Home

MITSUBISHI FUSO TRUCK OF AMERICA, Inc.

Pub.No.TWME0709-51

INDEX

STRUCTURE AND OPERATION
1. Wiper and Washer System 51-2

TROUBLESHOOTING 51-3

MIRROR 51-4

WIPER AND WASHER 51-6

FRONT PANEL 51-12

FRONT GRILLE 51-16

CORNER PANEL 51-18

FENDER 51-20

STEP
<No.1 STEP> 51-22
<No.2 STEP> 51-24

WHEEL HOUSE 51-26

WINDOW GLASS 51-30

1. Wiper and Washer System

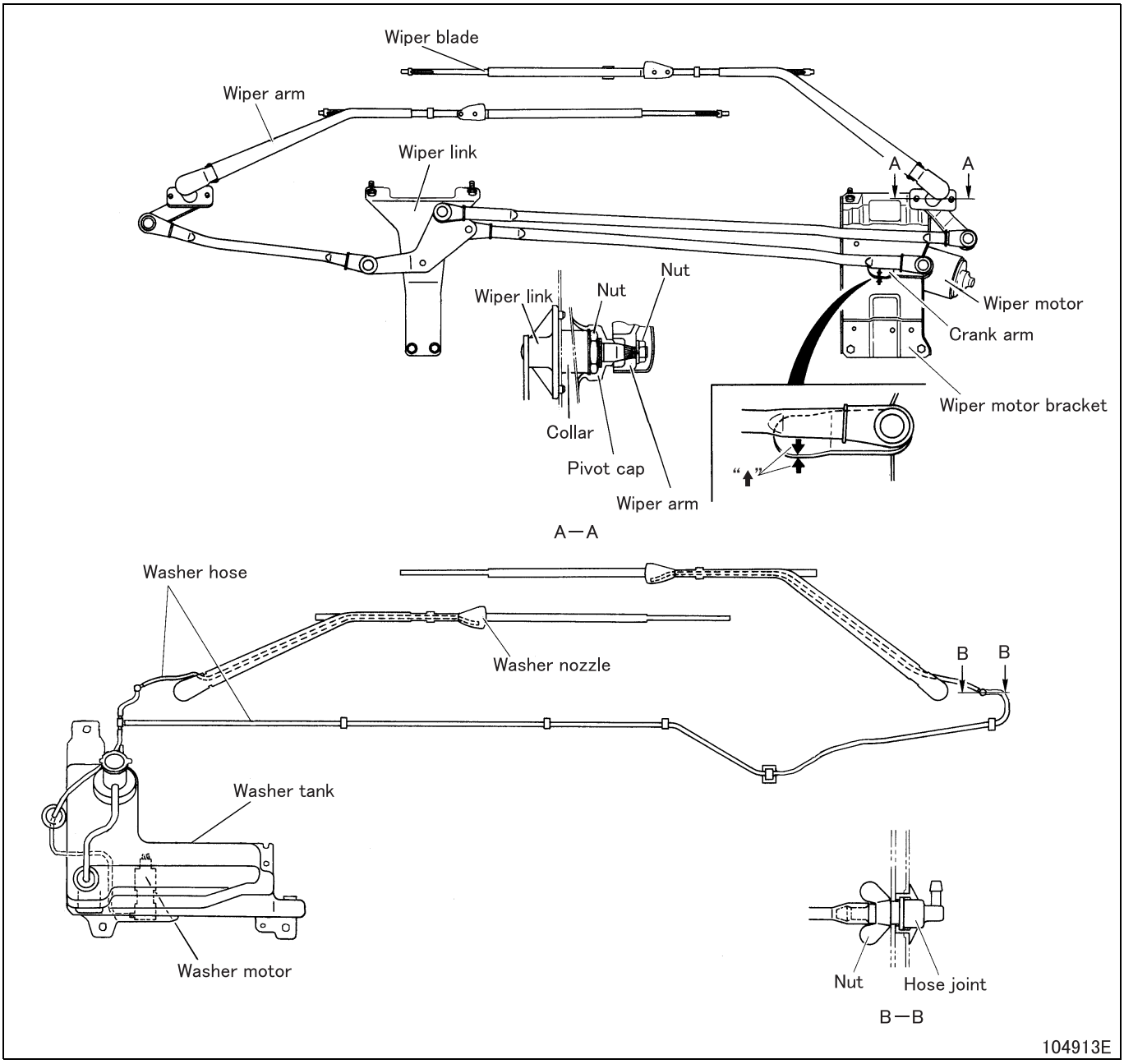

Wiper and washer

Symptoms / Possible causes	Wiper						Washer				Reference Gr
	Wiper does not work	Wiper does not stop	Wiper intermittent operation does not work	Wiper blade stop position incorrect	Wiper operation inadequate	Noise during wiper operation	Washer motor does not work	Washer fluid jetting insufficient	Washer fluid does not jet	Washer fails to operate in unison with wiper	
Wiper motor faulty	O	O		O		O					Gr54
Washer motor faulty							O	O	O		
Wiper and washer switch faulty	O	O	O				O			O	
Multipurpose timing control unit faulty			O							O	
Wiper relay faulty	O						O				
Fuse, high-current fuse blown	O						O				
Wiring broken or connection faulty	O		O				O		O	O	
Wiper motor crank arm set position faulty				O							
Wiper link and wiper arm improperly connected faulty						O					
Wiper blade faulty					O	O					
Wiper arm faulty					O						
Washer hose twisted								O	O		
Washer hose connected incorrectly								O	O		
Washer nozzle clogged								O	O		
Washer fluid insufficient									O		

MIRROR

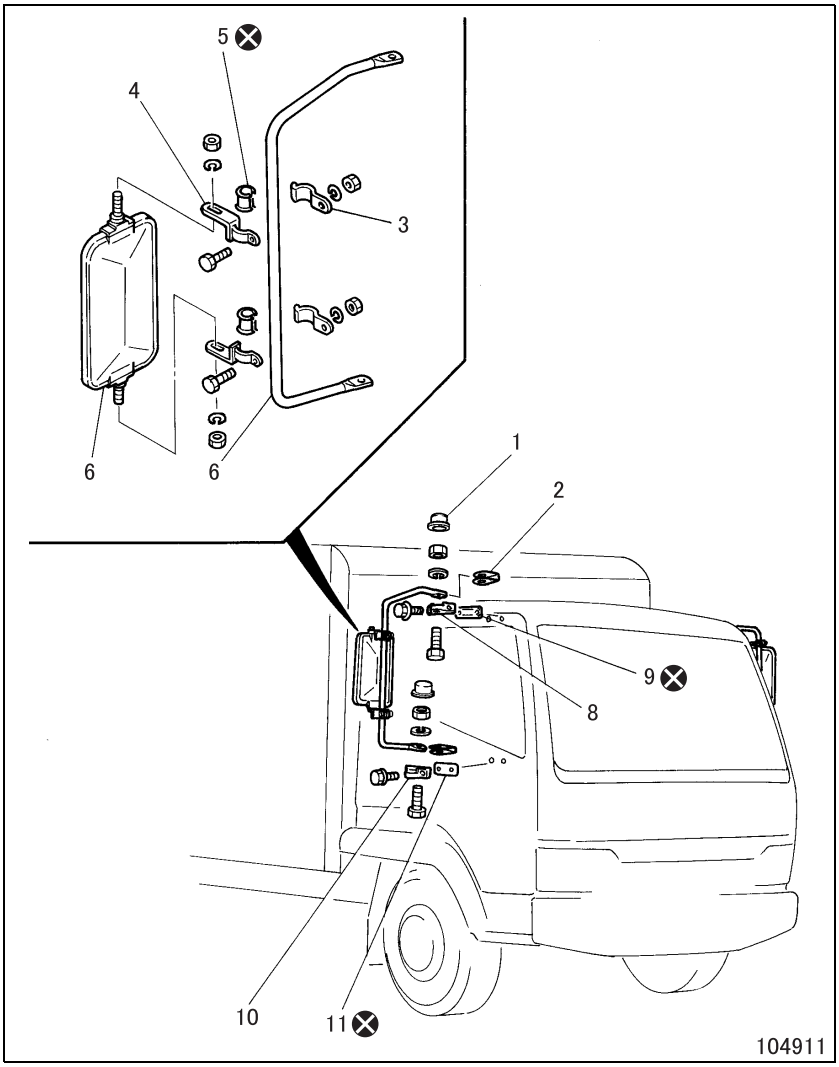

● Removal sequence

1 Cap
2 U-washer
3 Mirror holder B
4 Mirror holder
5 Packing
6 Outside mirror
7 Mirror stay
8 Mirror stay upper bracket
9 Packing
10 Mirror stay lower bracket
11 Packing

⊗: Non-reusable parts

● Installation sequence

Follow the removal sequence in reverse.

◆Installation procedure◆

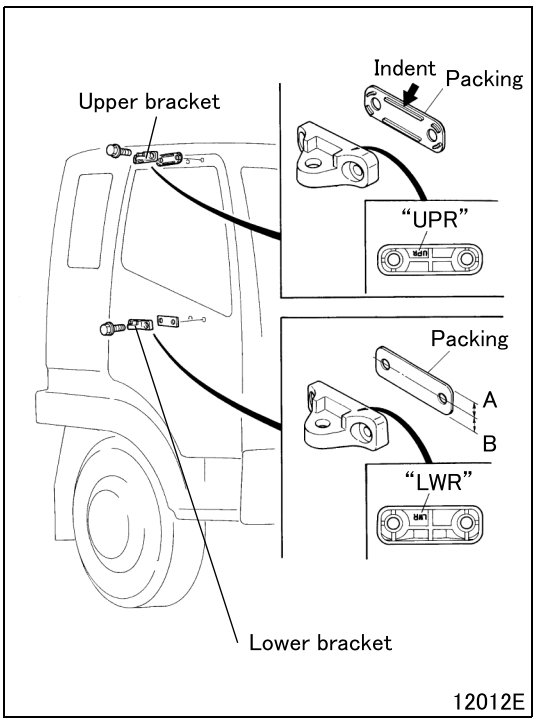

■Installation: Mirror stay bracket and packing

- "UPR" and "LWR" identification marks are marked on mirror stay upper bracket and mirror stay lower bracket respectively.
- Install indent on packing, facing mirror stay upper bracket.
- Installation hole is offset on packing.
  A: 13.8 mm {0.54 in.}
  B: 17.2 mm {0.68 in.}

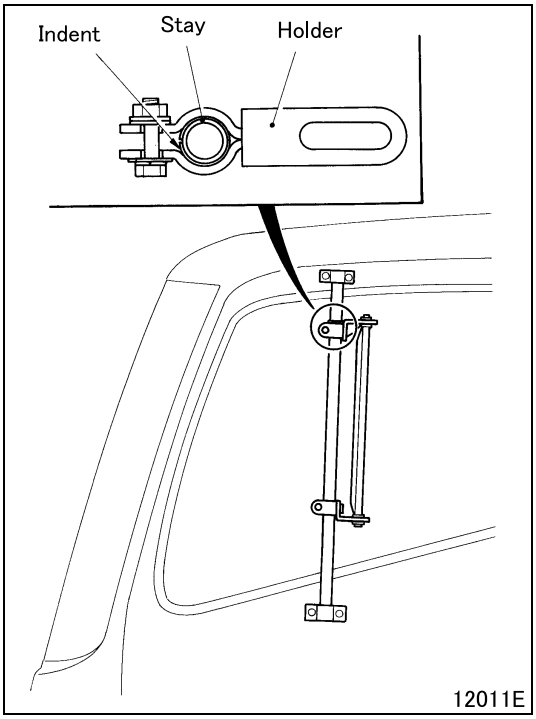

■Installation: Mirror holder

- Install mirror holder onto mirror stay in the direction as illustrated.

Wiper

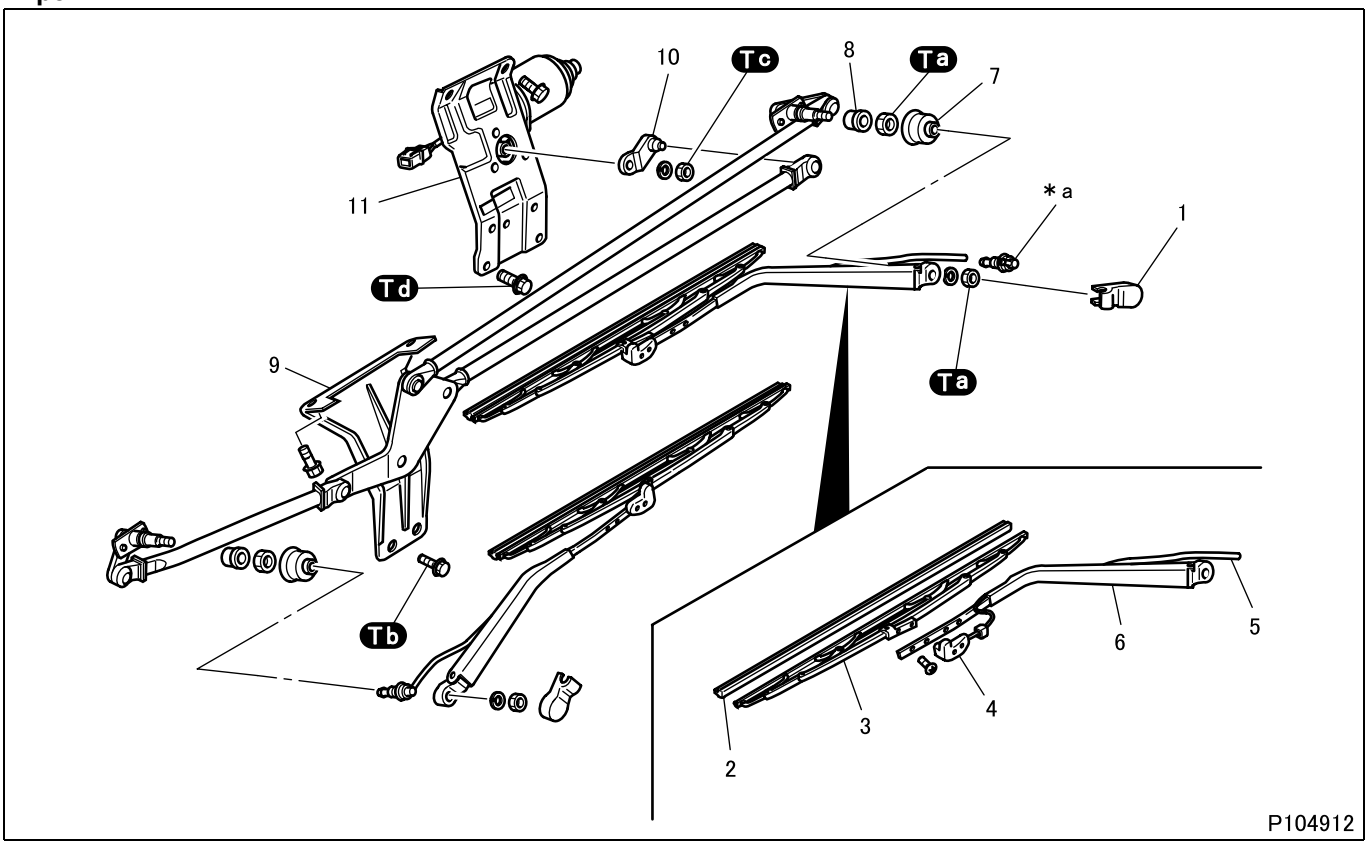

●Removal sequence

1 Head cover
2 Blade rubber
3 Wiper blade
4 Washer nozzle
5 Washer hose
6 Wiper arm
7 Pivot cap
8 Collar
9 Wiper link
10 Crank arm
11 Wiper motor and bracket

***a**: Hose joint (See later section.)

CAUTION ⚠

- **Do not remove crank arm unless it is defective. The crank arm is installed in a position precisely adjusted to the park position of wiper motor and bracket.**

●Installation sequence

Follow the removal sequence in reverse.

Service standards

Location	Maintenance item	Standard value	Limit	Remedy
7	Wiping force of wiper arm	7.65 ± 0.49 N {1.72 ± 0.11 lbs, 0.78 ± 0.05 kgf}	–	Replace

Tightening torque (Unit: N·m {ft.lbs, kgf·m})

Mark	Parts to be tightened	Tightening torque	Remarks
Ta	Nut (wiper arm and blade installation)	17 to 23 {12.3 to 16.6, 1.7 to 2.3}	–
	Nut (pivot of wiper link mounting)		
Tb	Bolt (wiper link installation)	10 to 15 {7.2 to 10.8, 1.0 to 1.5}	–
Tc	Nut (crank arm installation)	14.7 to 19.6 {11 to 14, 1.5 to 2.0}	–
Td	Bolt (wiper motor and bracket installation)	9 to 14 {6.5 to 10.1, 0.9 to 1.4}	–

◆Inspection procedure◆

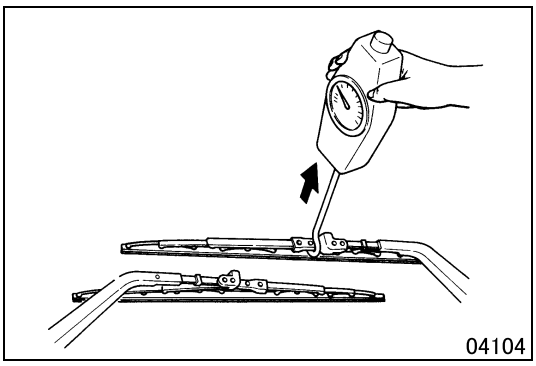

■Inspection: Wiper arm pressing force

- If the measured value is out of the standard, replace the wiper arm.

◆Installation procedure◆

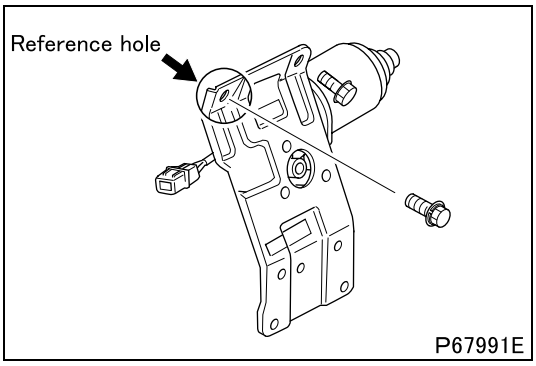

■Installation: Wiper motor and bracket

- Wiper motor and bracket has a reference hole for installation.
- Tighten bolt starting with the location identified by the reference hole.

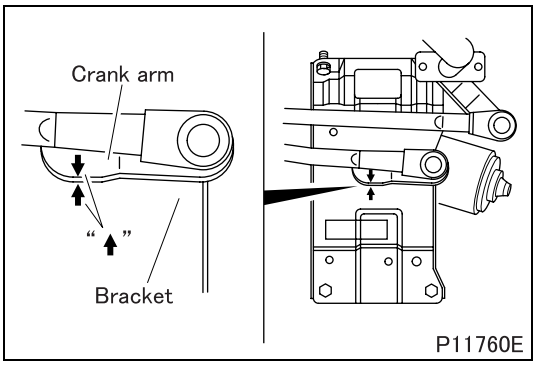

■Installation: Crank arm

- Align wiper motor and bracket with mating mark "⬆" of crank arm to install.

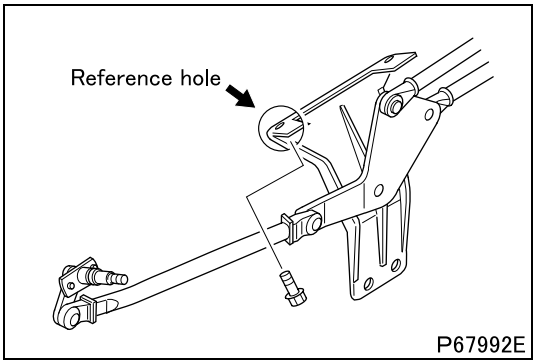

■**Installation: Wiper link**

- Wiper link has a reference hole for installation.
- Tighten bolt starting with the location identified by the reference hole.

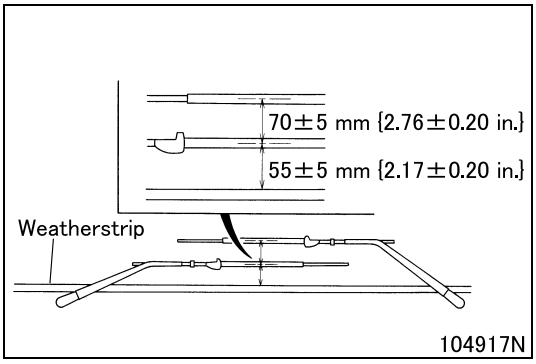

■**Installation: Wiper arm and blade**

- Install wiper arm and blade to wiper link from the end face of weatherstrip to the dimension shown in illustration.

M E M O

Washer

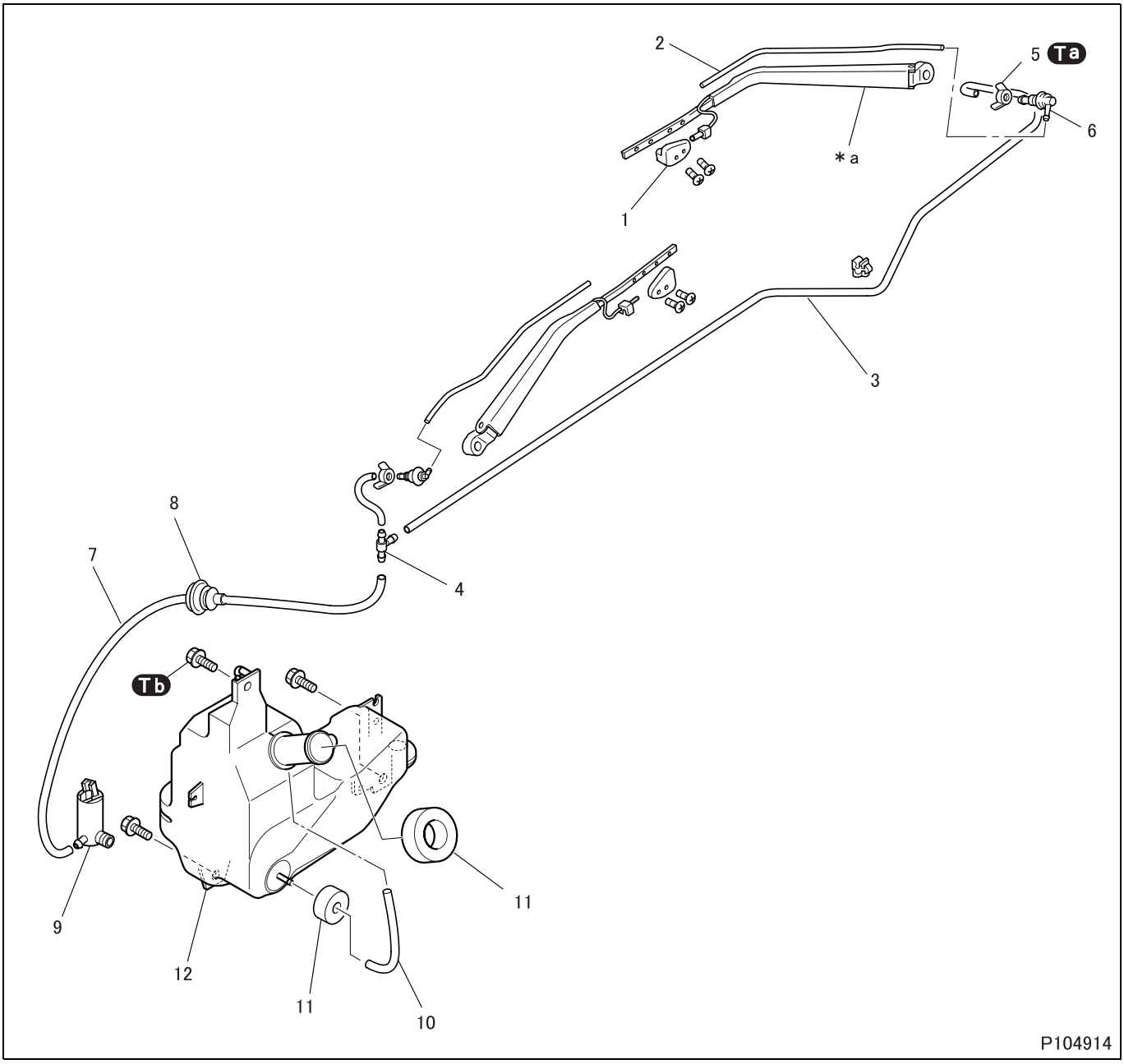

● **Removal sequence**

1 Washer nozzle
2 Washer hose
3 Washer hose
4 Hose joint
5 Wing nut
6 Hose joint
7 Washer hose
8 Grommet
9 Wind washer motor
10 Washer tank hose
11 Packing
12 Washer tank

***a**: Wiper arm and blade

● **Installation sequence**

Follow the removal sequence in reverse.

Tightening torque (Unit: N·m {ft.lbs, kgf·m})

Mark	Parts to be tightened	Tightening torque	Remarks
Ta	Wing nut (hose joint mounting)	0.6 to 0.9 {0.43 to 0.65, 0.06 to 0.09}	–
Tb	Bolt (washer tank mounting)	7.8 to 11.8 {5.8 to 8.7, 0.8 to 1.2}	–

◆Inspection procedure◆

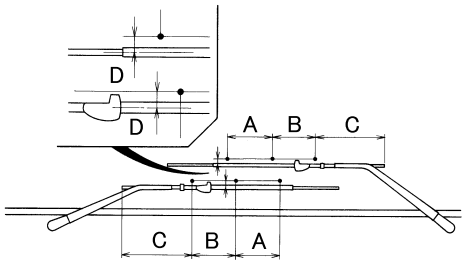

11758

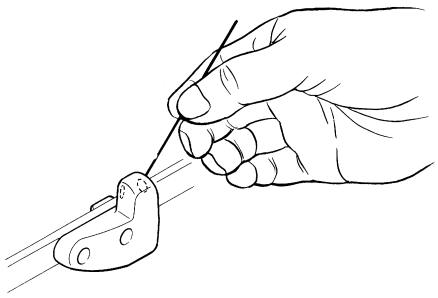

00540

■Inspection: Washer nozzle

- Make sure that the target landing position of washer fluid is to the dimensions shown in the table below.

Unit: mm {in.}

A	B	C	D
130 {5.12}	130 {5.12}	210 {8.27}	15 {0.59}

- If the target landing position of washer fluid is misaligned, adjust the angle of the spray hole of washer nozzle with wire.

CAUTION ⚠

- **Be careful not to damage the spray hole of washer nozzle with wire.**

FRONT PANEL

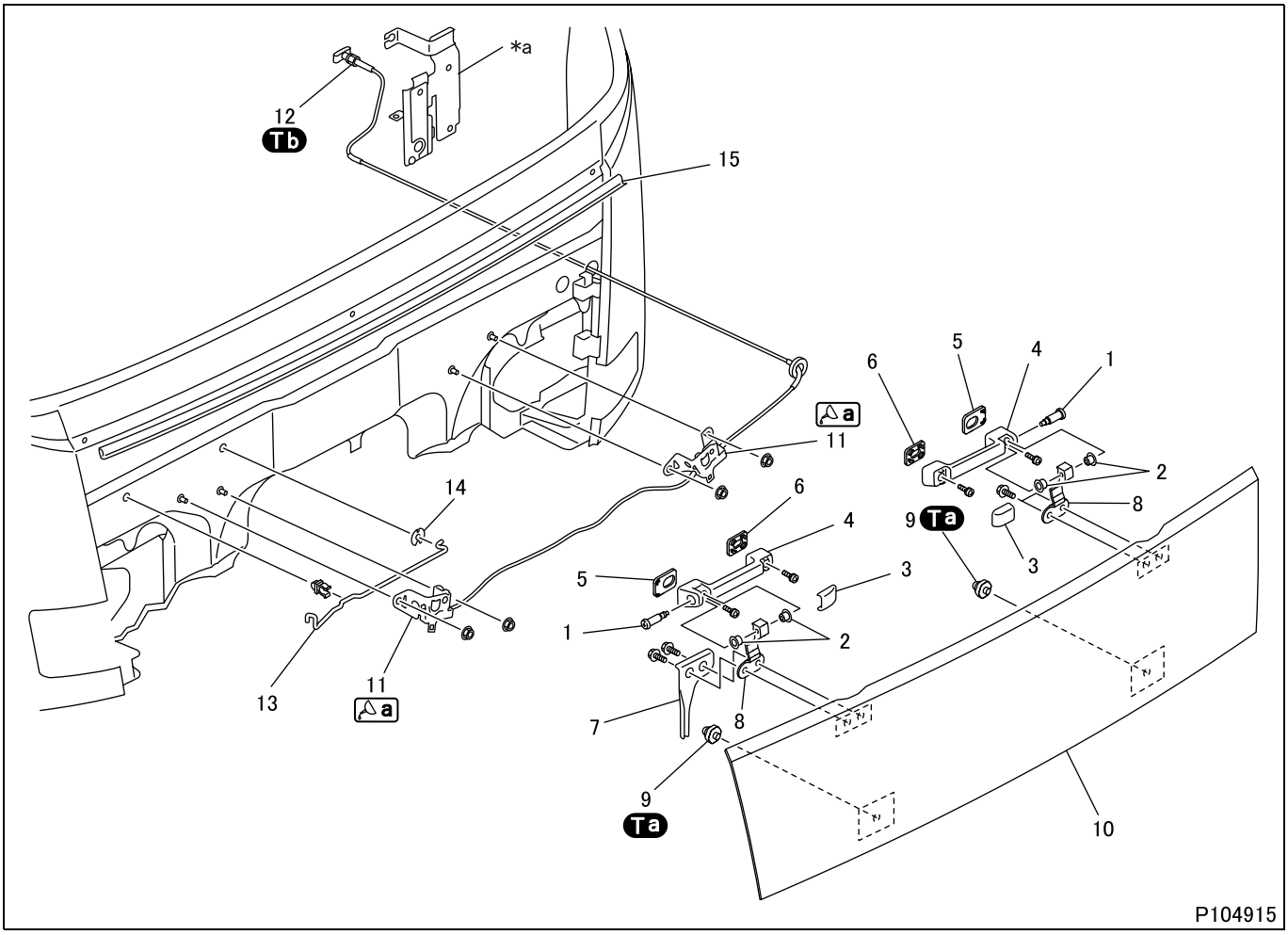

● **Removal sequence**

1 Front panel hinge pin
2 Bushing
3 Cover
4 Front grip
5 Packing
6 Packing
7 Shield plate
8 Front panel hinge
9 Striker
10 Front panel
11 Front panel latch
12 Front panel opener cable
13 Front panel support rod
14 Grommet
15 Weatherstrip

***a**: Brake pedal bracket

● **Installation sequence**

Follow the removal sequence in reverse.

Tightening torque (Unit: N·m {ft.lbs, kgf·m})

Mark	Parts to be tightened	Tightening torque	Remarks
Ta	Striker	11.2 {8.3, 1.1}	–
Tb	Resin nut of front panel opener cable	1.5 to 2.5 {11 to 1.8, 0.15 to 0.25}	–

Lubricant and/or sealant

Mark	Points of application	Specified lubricant and/or sealant	Quantity
a	Striker contacting portion of front panel latch, and spring	Wheel bearing grease [NLGI No.2 (Li soap)]	As required

◆Removal procedure◆

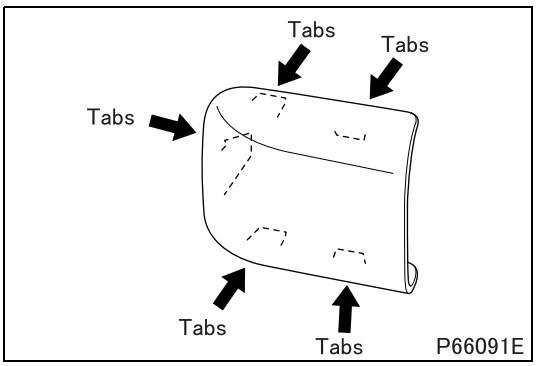

■**Removal: Cover**

◆Installation procedure◆

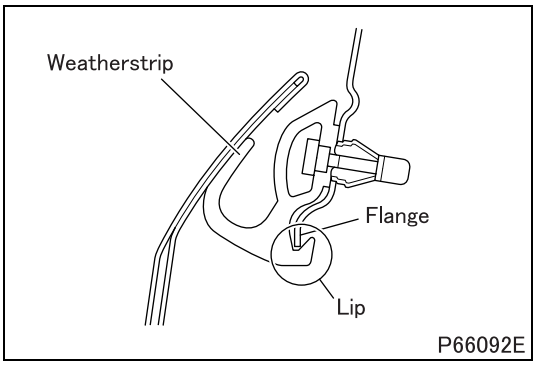

■**Installation: Weatherstrip**

- Install the weatherstrip securely by fitting the lip into the flange.

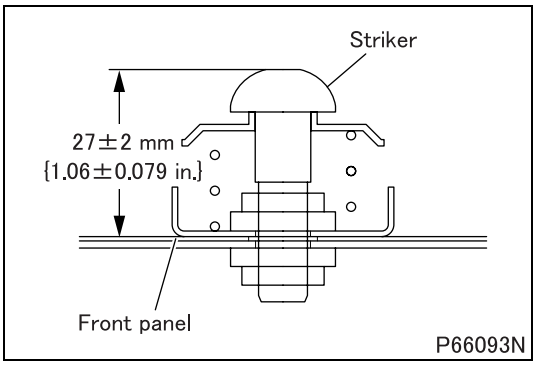

■**Installation: Striker**

- Adjust until the gap dimension between the front panel and striker shown in the illustration is obtained. Install the striker.

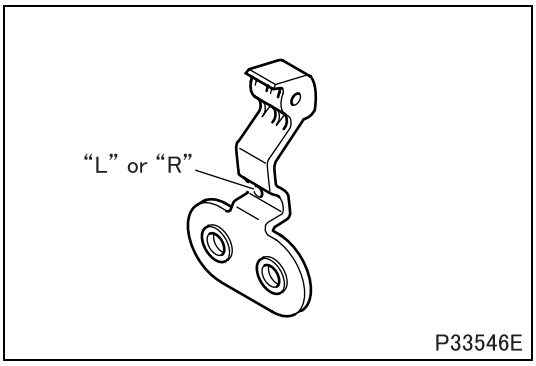

■**Installation: Front panel hinge**

- Front panel hinges are marked with a letter (“L” or “R”) indicating the installation position. Be sure to install them on the specified side according to the identification mark.

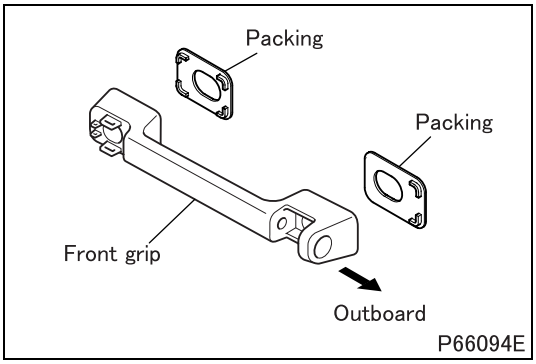

■**Installation: Packing**

- Install packings in the illustrated direction.

M E M O

FRONT GRILLE

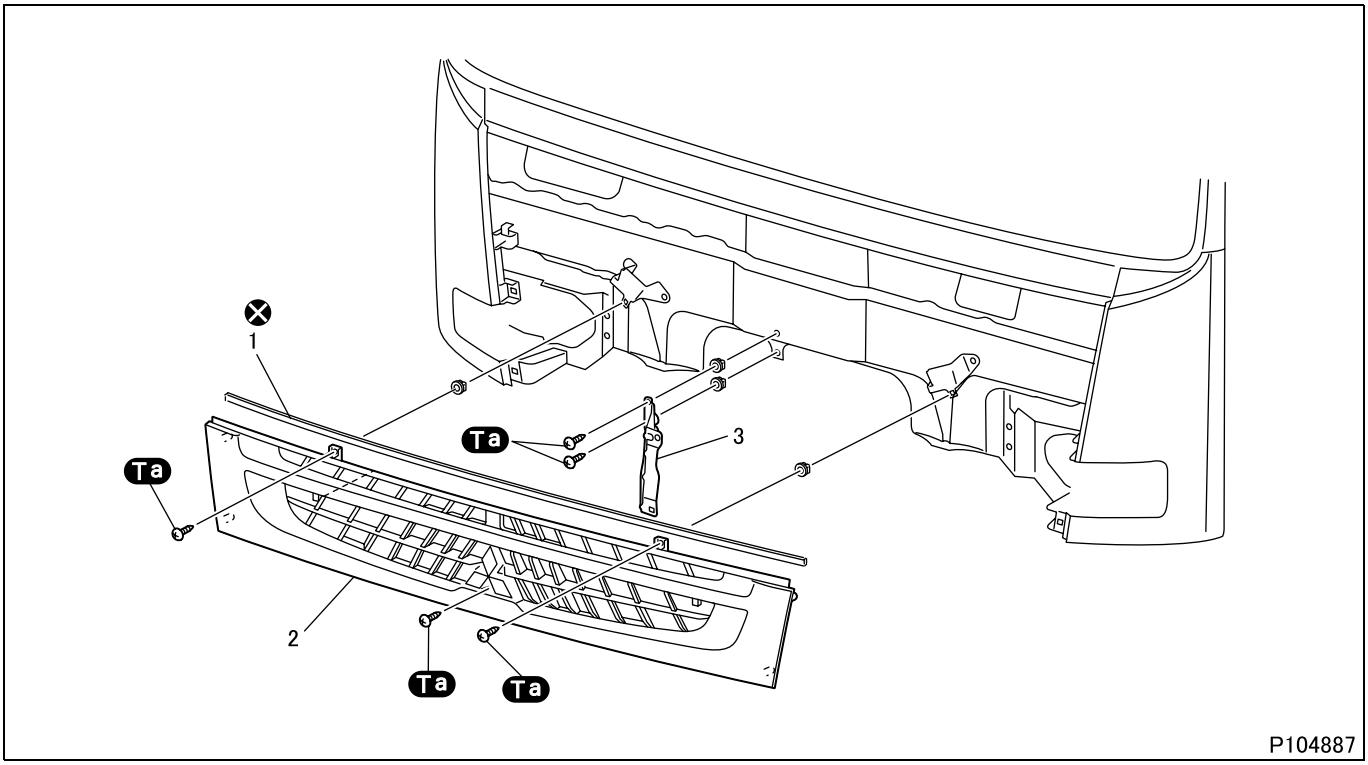

● **Removal sequence**

1 Front grille weatherstrip
2 Front grille
3 Grille stay center
⊗: Non-reusable parts

● **Installation sequence**

Follow the removal sequence in reverse.

Tightening torque (Unit: N·m {ft.lbs, kgf·m})

Mark	Parts to be tightened	Tightening torque	Remarks
Ta	Screw (front grille installation)	1.57 {1.2, 0.16} or less	–
	Screw (grille stay center installation)		

◆ **Installation procedure** ◆

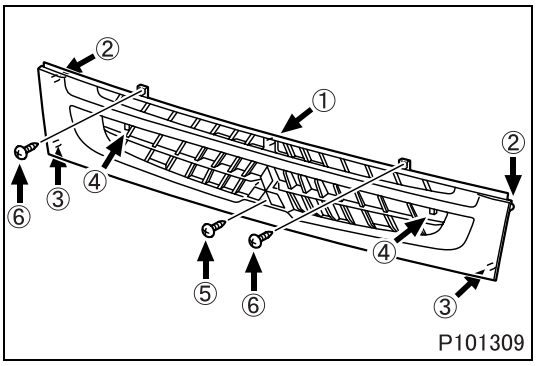

■ **Installation: Front grille**

- Install the front grille by following the sequence shown in the illustration.

M E M O

CORNER PANEL

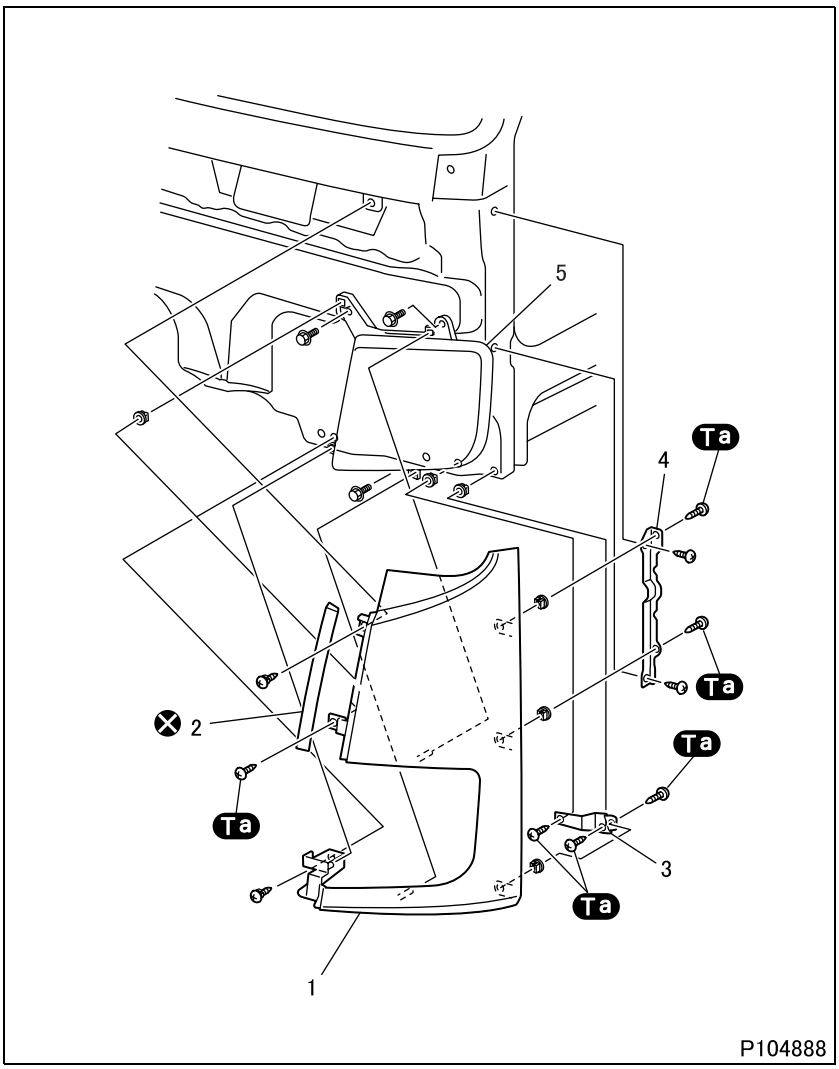

● **Removal sequence**

1 Corner panel
2 Corner panel weatherstrip
3 Corner panel lower bracket
4 Corner panel bracket
5 Headlamp and front turn signal lamp

⊗: Non-reusable parts

● **Installation sequence**

Follow the removal sequence in reverse.

Tightening torque (Unit: N·m {ft.lbs, kgf·m})

Mark	Parts to be tightened	Tightening torque	Remarks
Ta	Screw (corner panel installation)	1.57 {1.2, 0.16} or less	–
	Screw (corner panel lower bracket installation)		

◆Removal procedure◆

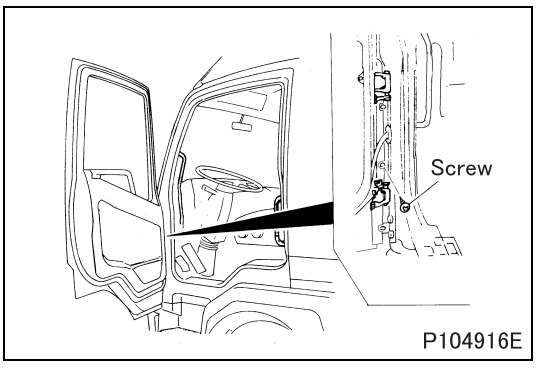

■**Removal: Corner panel**

- Open the door. Remove the three screws through the gap.
- Close the door. Remove the three screws from the front of the cab.
- Remove the corner panel by pulling it away from the vehicle.

CAUTION ⚠

- **If you open the door while the corner panel is protruding from the vehicle, the corner panel and door may make contact, resulting in deformation and other damage.**

◆Installation procedure◆

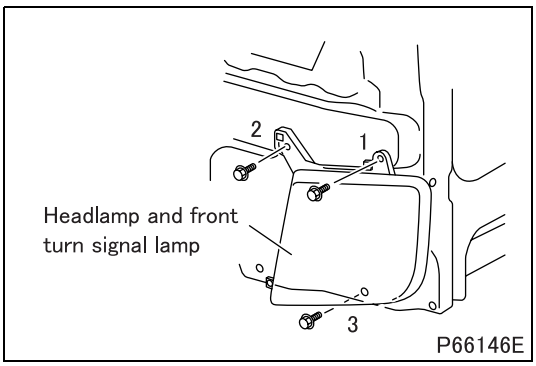

■Installation: Headlamp and front turn signal lamp

- Install the headlamp and front turn signal lamp by following the sequence shown in the illustration.

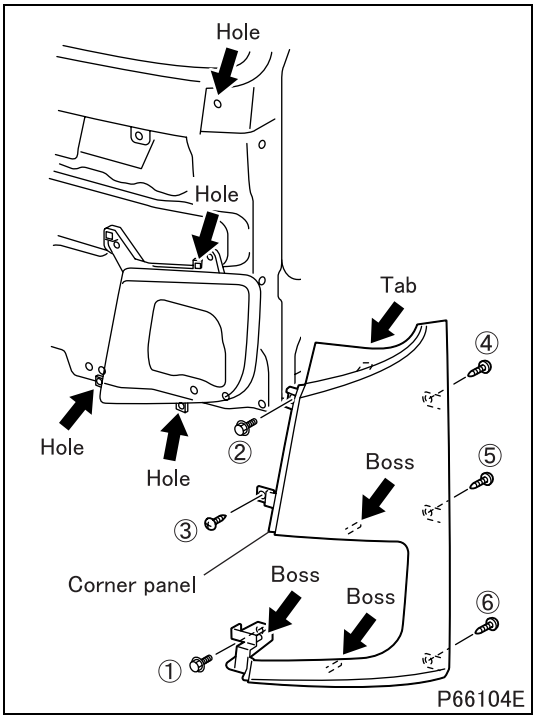

- Hook the tab of the corner panel onto holes on the cab side.
- Insert the bosses of the corner panel to the hole of headlamp.
- Install the corner panel by following the sequence shown in the illustration.

FENDER

<FK61>

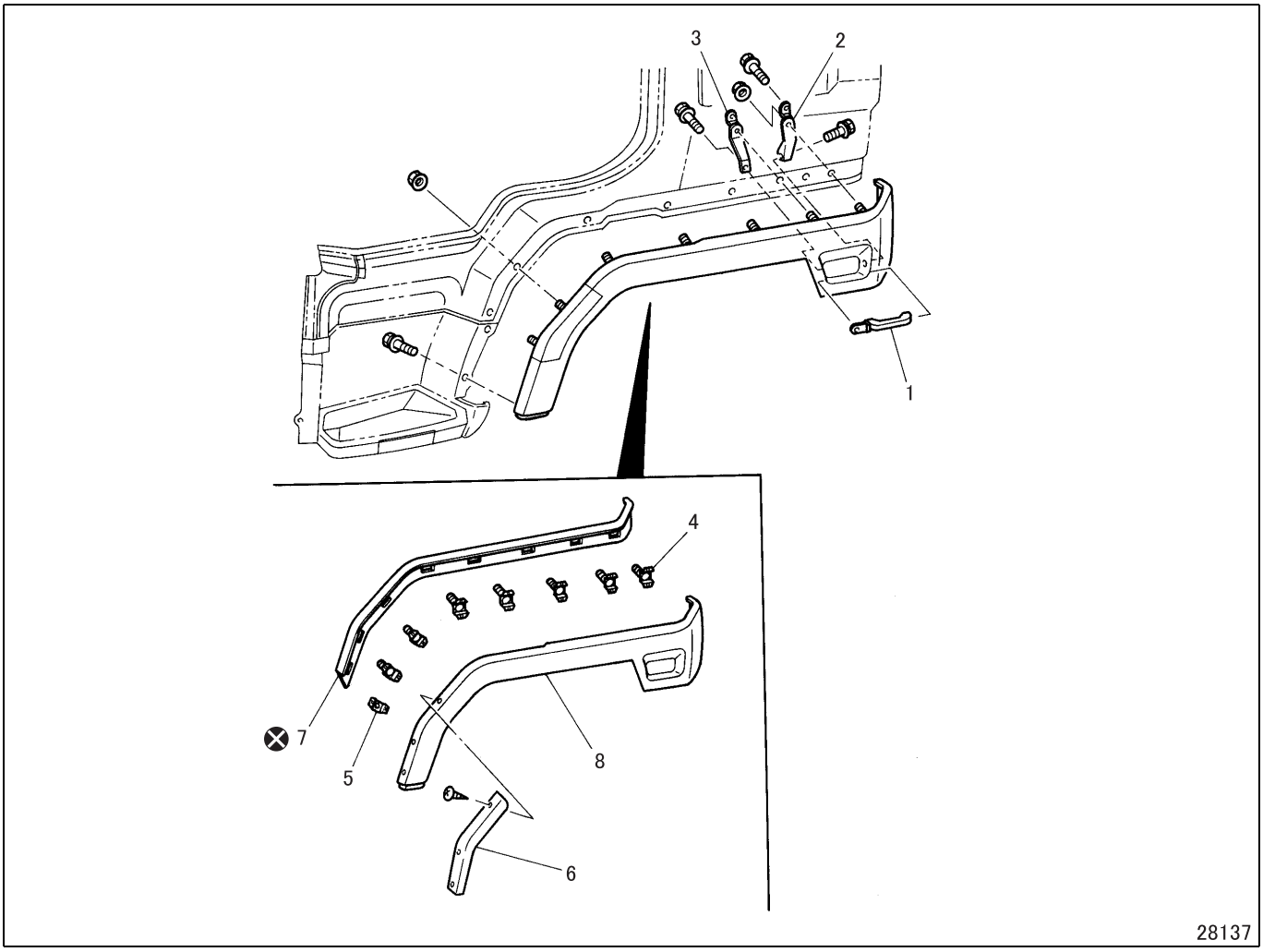

● Disassembly sequence

1 Cab tilt grip
2 Cab tilt grip rear stay
3 Cab tilt grip front stay
4 Bolt plate
5 Nut plate
6 Fender protector
7 Welt
8 Fender

⊗: Non-reusable parts

● Assembly sequence

Follow the disassembly sequence in reverse.

NOTE

- **The illustration shows the left side. The right side is symmetrical to the left side except that the right side does not have cab tilt grip.**

<Except FK61>

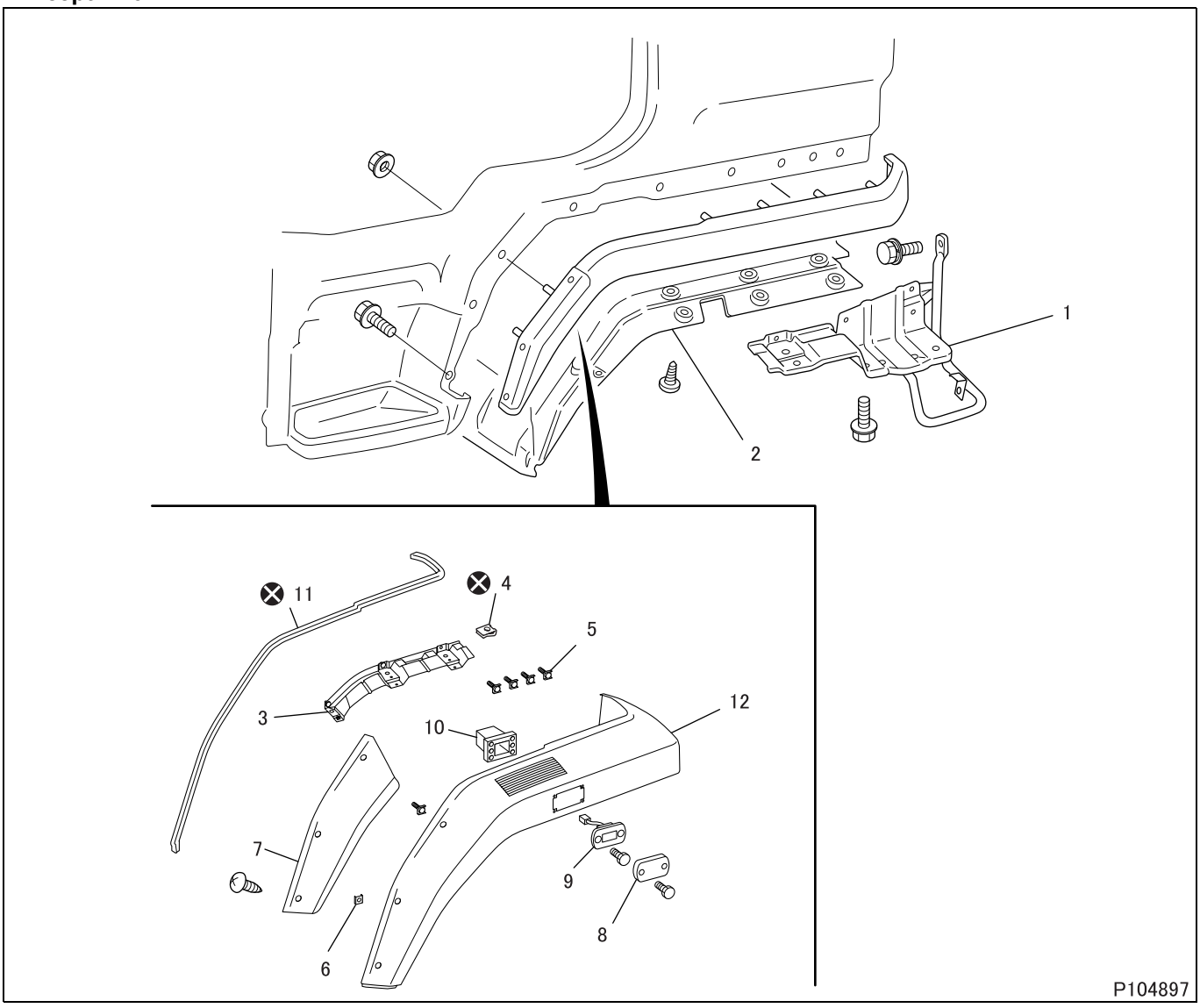

● Disassembly sequence

1 Cab tilt grip
2 Wheel arch cover
3 Fender bracket
4 Spring nut
5 Bolt plate
6 Nut plate
7 Fender protector
8 Lens
9 Side turn signal lamp
10 Side turn signal lamp cover
11 Welt
12 Fender

⊗: Non-reusable parts

● Assembly sequence

Follow the disassembly sequence in reverse.

NOTE

- **The illustration shows the left side. The right side is symmetrical to the left side except that the right side does not have cab tilt grip.**

STEP <No.1 STEP>

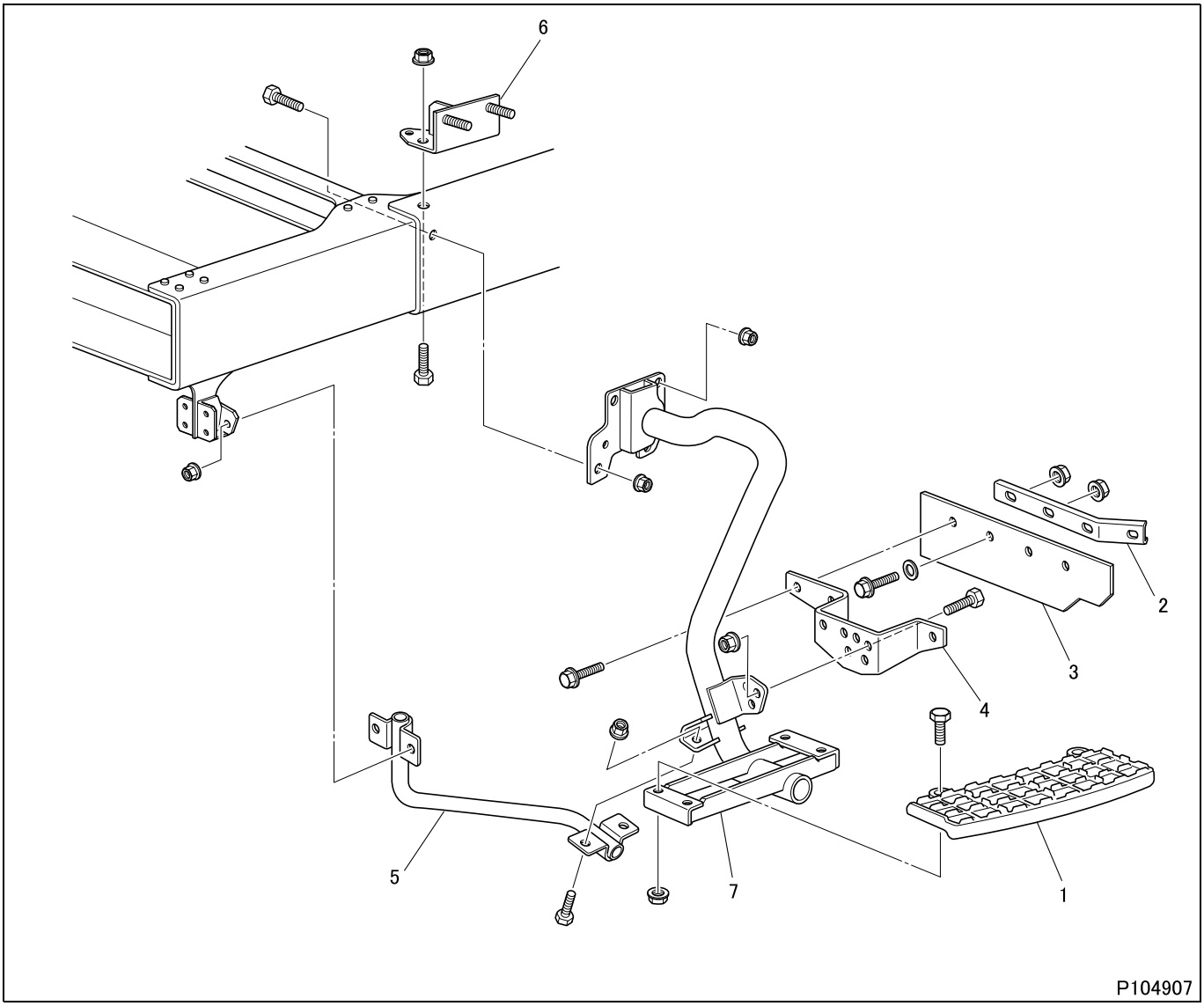

● **Removal sequence**

1 Lower step
2 Apron support
3 Splash apron
4 Apron support
5 Step stay
6 Step bracket
7 Step bracket

● **Installation sequence**

Follow the removal sequence in reverse.

M E M O

STEP <No.2 STEP>

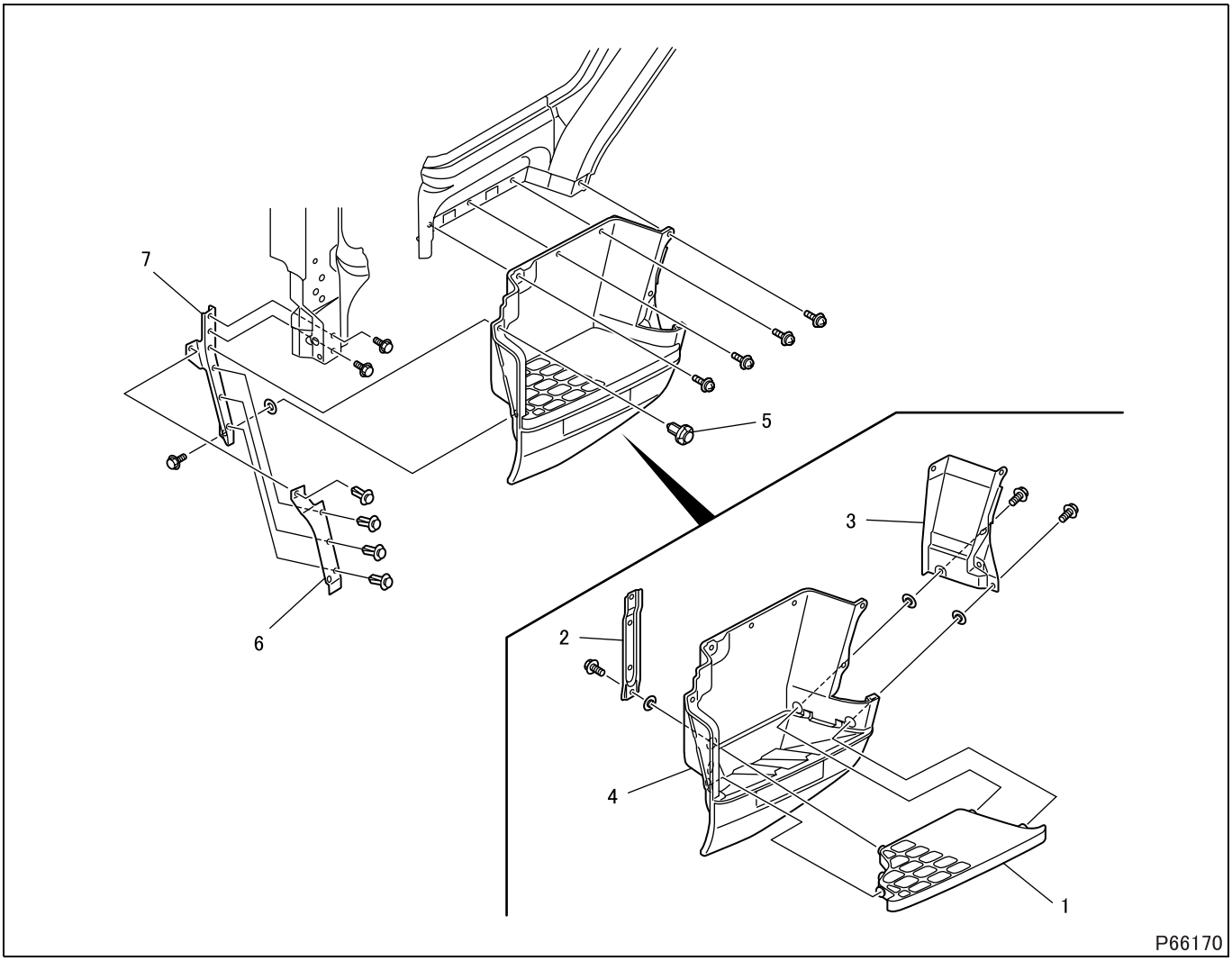

● **Removal sequence**

1 Step plate
2 Step center bracket
3 Step rear bracket
4 Step wall
5 Clip
6 Front step apron
7 Step front bracket

● **Installation sequence**

Follow the removal sequence in reverse.

◆Removal procedure◆

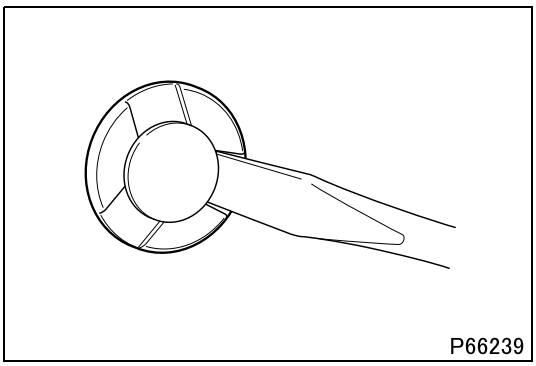

■**Removal: Clip**

- To remove a clip, unlock it by prying up as shown with a screwdriver.

◆Installation procedure◆

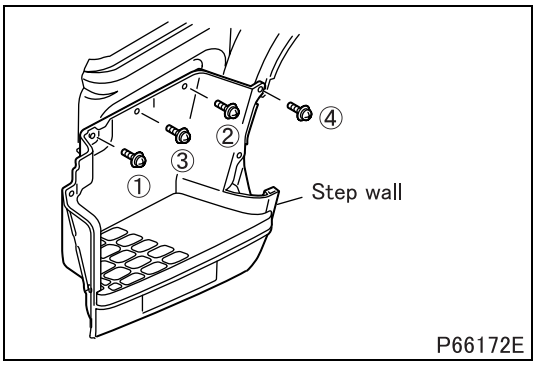

■**Installation: Step wall**

- Install the step wall by following the sequence shown in the illustration.

WHEEL HOUSE

<FK61>

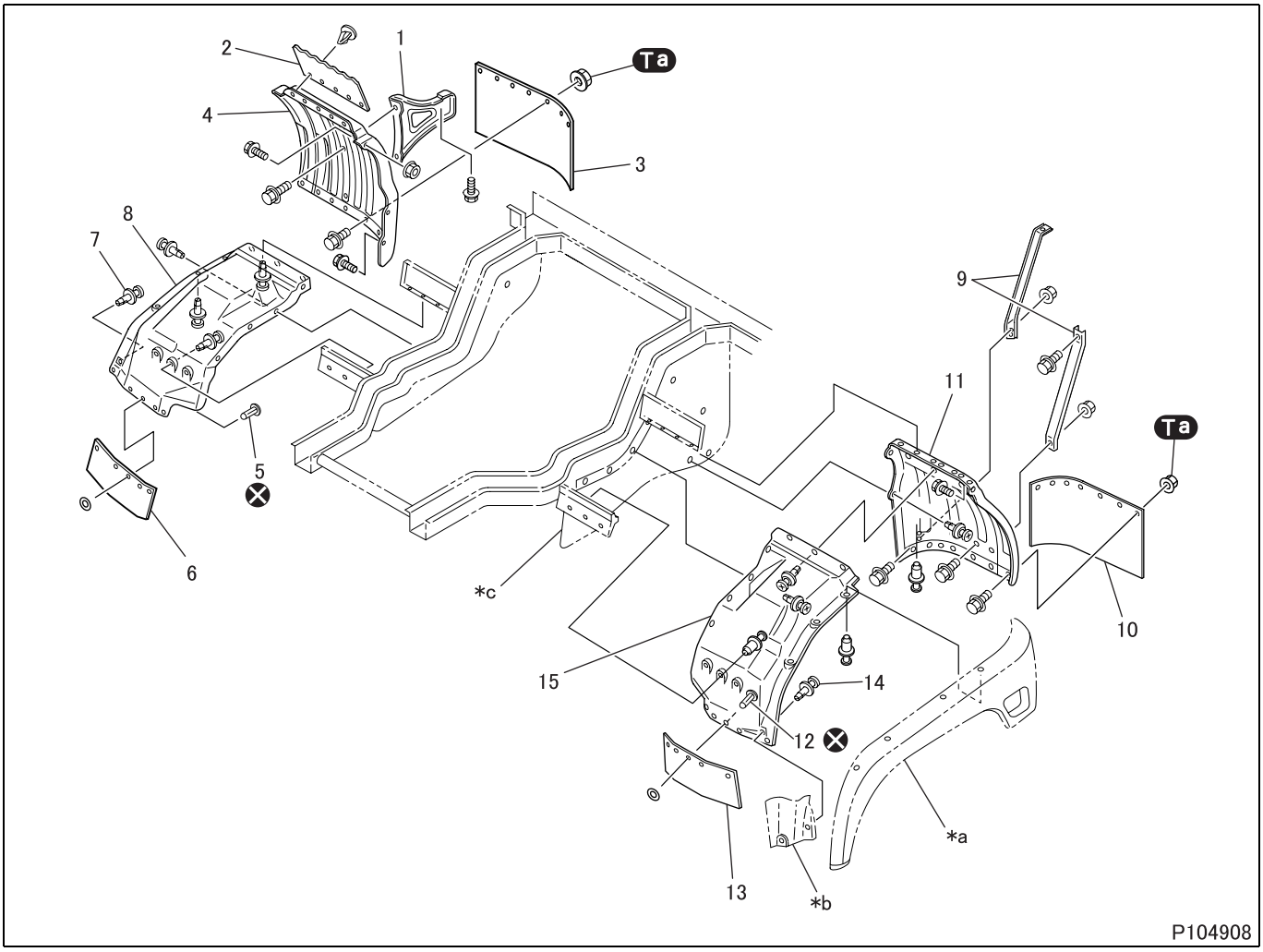

● Disassembly sequence

1 Mud guard bracket
2 Upper apron
3 Lower apron
4 Mud guard, right-hand
5 Rivet
6 Splash apron, right-hand
7 Clip
8 Wheel house cover, right-hand
9 Mud guard stay
10 Lower apron
11 Mud guard, left-hand
12 Rivet
13 Splash apron, left-hand
14 Clip
15 Wheel house cover, left-hand

***a**: Fender (See former section.)
***b**: Step bracket (See former section.)
***c**: Side cover

● Assembly sequence

Follow the disassembly sequence in reverse.

Tightening torque (Unit: N·m {ft.lbs, kgf·m})

Mark	Parts to be tightened	Tightening torque	Remarks
Ta	Nut (lower apron installation)	3.9 {2.9, 0.4}	–

◆Removal procedure◆

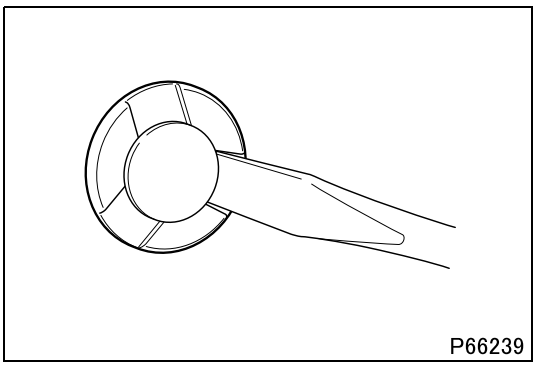

■Removal: Clip

- To remove a clip, unlock it by prying up as shown with a screwdriver.

WHEEL HOUSE

<Except FK61>

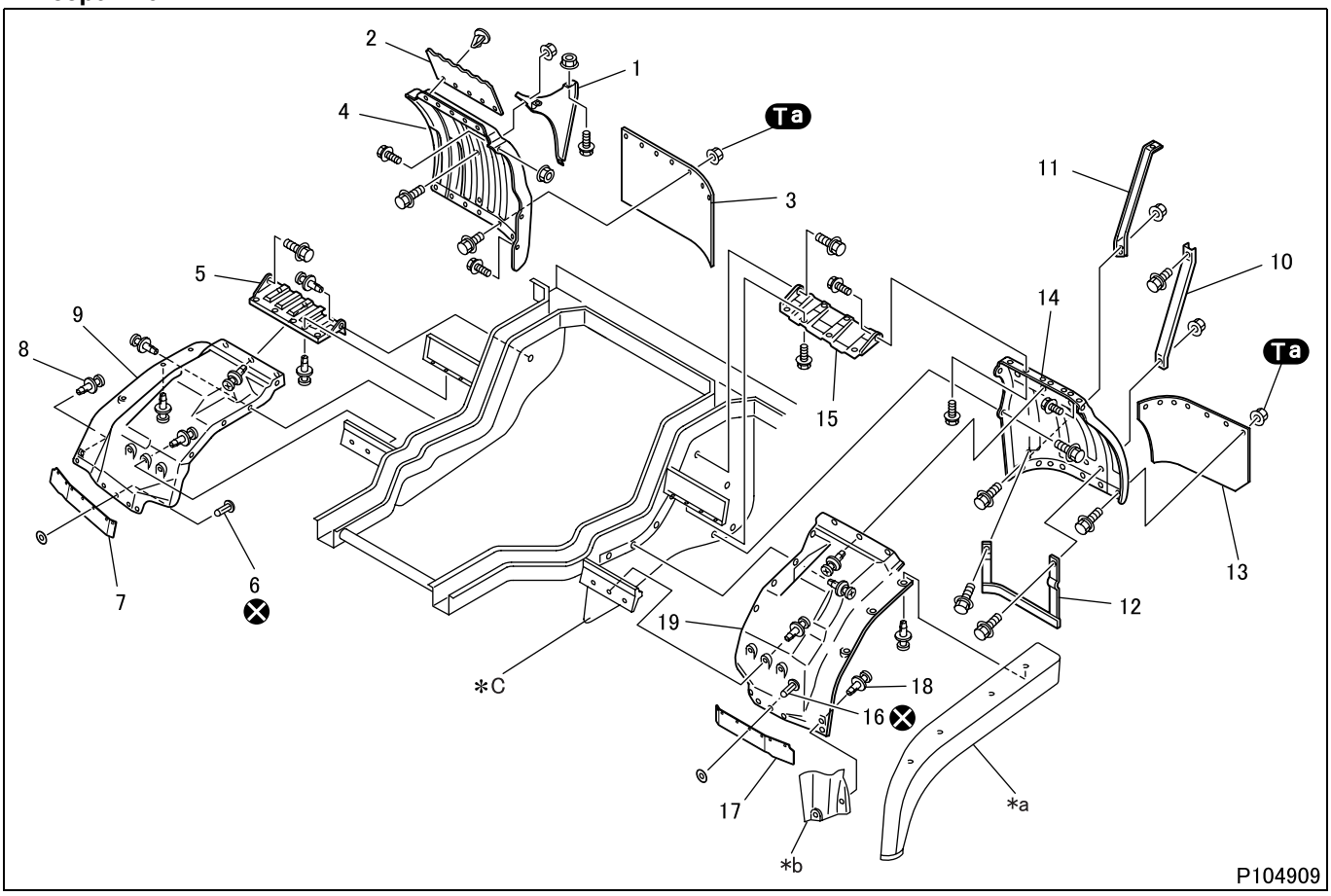

● Disassembly sequence

1 Mud guard bracket
2 Upper apron
3 Lower apron
4 Mud guard, right-hand
5 Mud shield, right-hand
6 Rivet
7 Splash apron, right-hand
8 Clip
9 Wheel house cover, right-hand
10 Mud guard stay
11 Mud guard stay
12 Protector
13 Lower apron
14 Mud guard, left-hand
15 Mud shield, left-hand
16 Rivet
17 Splash apron, left-hand
18 Clip
19 Wheel house cover, left-hand

***a**: Fender
***b**: Step bracket
***c**: Side cover
⊗: Non-reusable parts

● Assembly sequence

Follow the disassembly sequence in reverse.

Tightening torque (Unit: N·m {ft.lbs, kgf·m})

Mark	Parts to be tightened	Tightening torque	Remarks
Ta	Nut (lower apron installation)	3.9 {2.9, 0.4}	–

◆Removal procedure◆

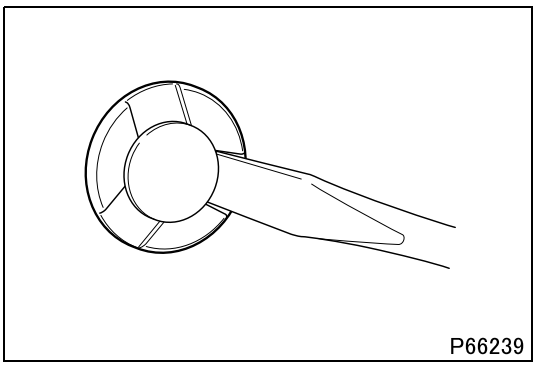

■Removal: Clip

- To remove a clip, unlock it by prying up as shown with a screwdriver.

WINDOW GLASS

Front and rear glass

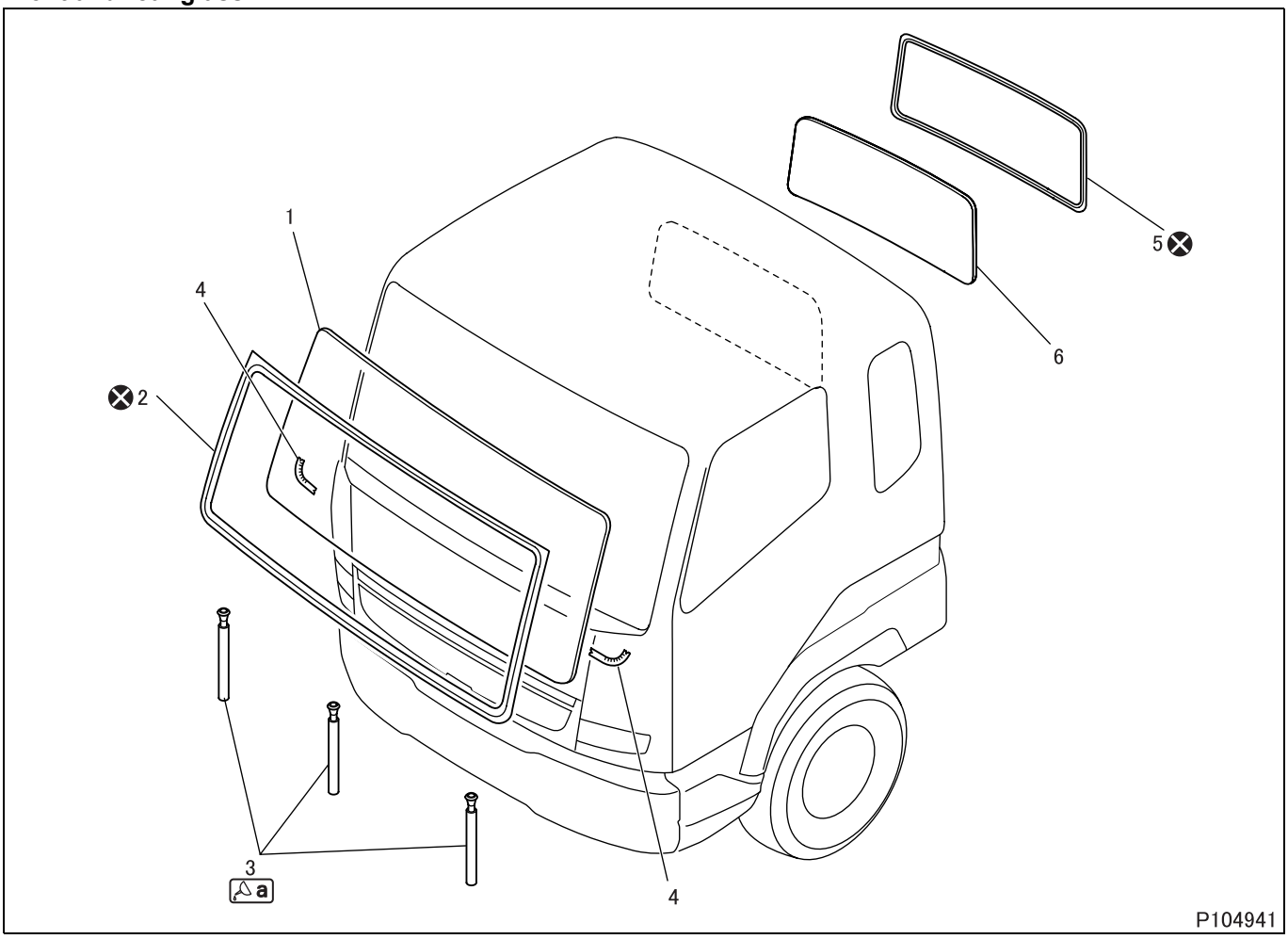

● **Removal sequence**

1 Windshield glass
2 Windshield weatherstrip
3 Drain hose
4 Seal tape
5 Rear window weatherstrip
6 Rear window glass

⊗: Non-reusable parts

● **Installation sequence**

Follow the removal sequence in reverse.

Lubricant and/or sealant

Mark	Points of application	Specified lubricant and/or sealant	Quantity
a	Fill the area around the drain hose mounting flange on cab	CEMEDINE 3061-D	As required

◆Removal procedure◆

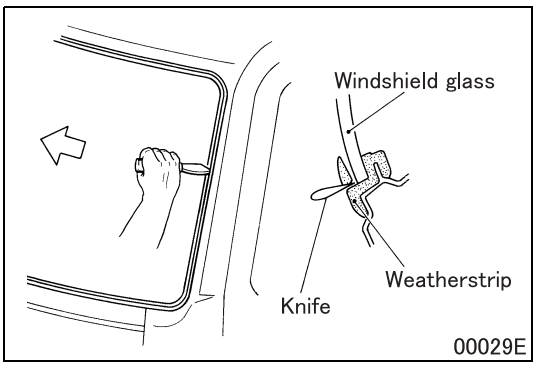

■Removal: Windshield glass

- Cut weatherstrip with knife at the area as illustrated.
- Support windshield glass, and remove by pressing it from inside the cab.

◆Installation procedure◆

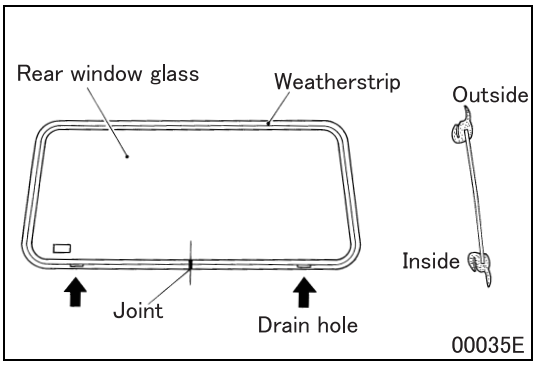

■Installation: Rear window weatherstrip and rear window glass

- Fit the rear of the window weatherstrip round the rear window glass so that the joint of weatherstrip comes at the bottom of the glass.
- Except for the point mentioned above, install the rear window glass in the same manner as the windshield glass.

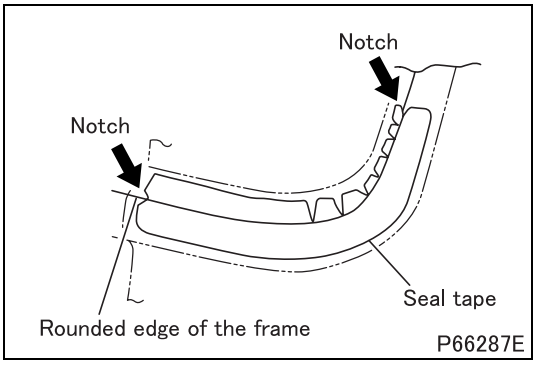

■Installation: Seal tape

- Peel off the liner paper only from the upper half of the seal tape.
- Holding the lower half of the seal tape, align the notches with the rounded edge of the frame and attach the upper half to the frame.
- Peel off the liner paper from the lower half of the seal tape. Attach the lower half to the frame while taking care not to make creases.

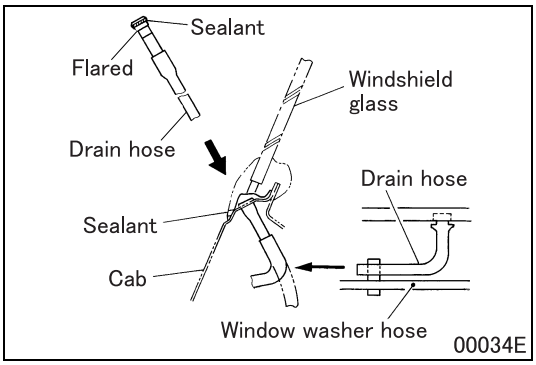

■Installation: Drain hose

- Fill the area around the flange of drain hose with sealant, and press the drain hose in until its flared area fits into cab. Carefully smooth down excess sealant that is squeezed out so that the hose opening is not clogged.
- Secure drain hose at the middle of the vehicle together with windshield washer hose.

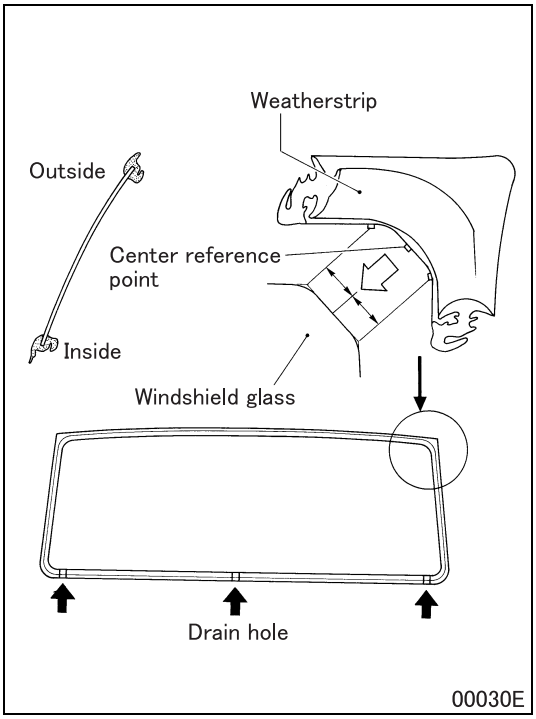

■Installation: Windshield weatherstrip and windshield glass

- Install the weatherstrip with its center reference point aligned with the center of the cut at each corner of the glass.

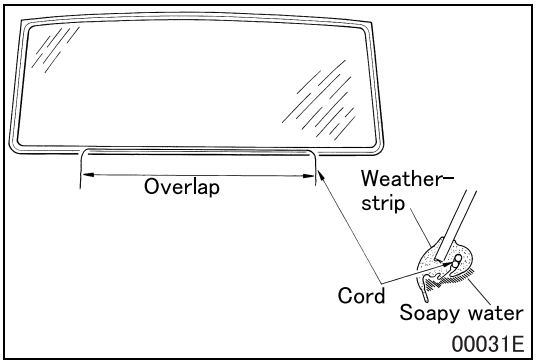

- Put a piece of strong cord in the cab flange fitting groove in the weatherstrip with its end portions overlapped.
- Apply soapy water to weatherstrip.

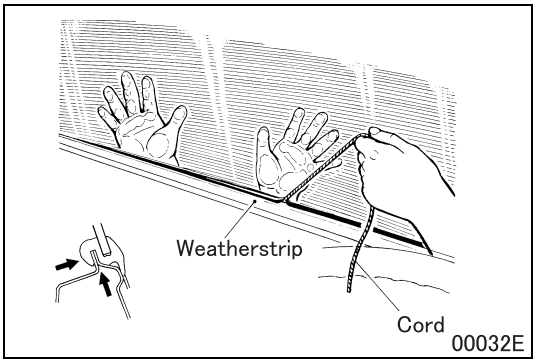

- With the glass strongly pushed from outside, pull out the cord by its ends from inside the cab to gradually fit the flange of the cab in the inner groove of the weatherstrip.

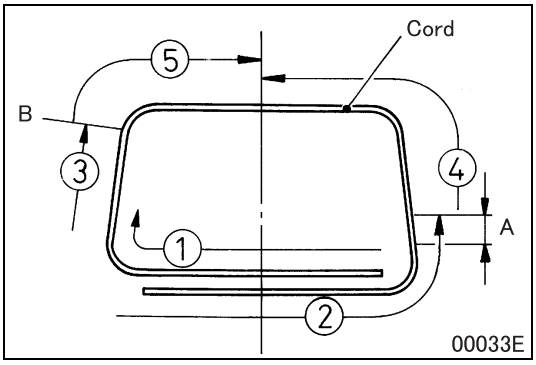

- Pull the cord in the numerical order of steps as shown. At the same time, while tapping with a rubber-headed mallet from outside the cab, settle the windshield glass in place in the weatherstrip.
  A: Approx. 100 mm from the beginning of straight portion
  B: Up to the end of straight portion

Side window glass

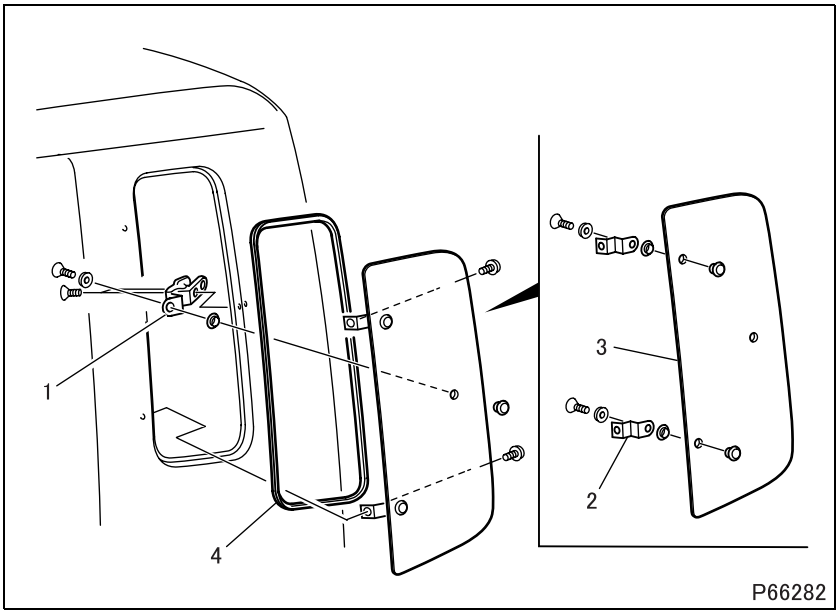

● Removal sequence

1 Side window link
2 Side window hinge
3 Side window glass
4 Side window weatherstrip

● Installation sequence

Follow the removal sequence in reverse.

◆Installation procedure◆

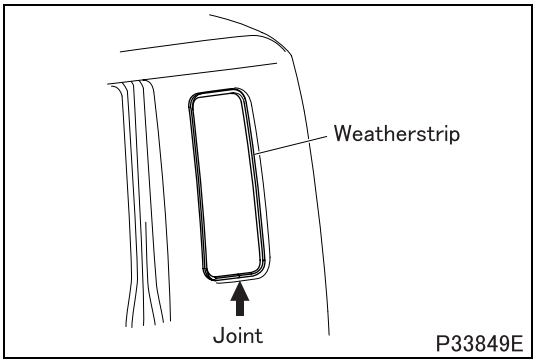

■Installation: Weatherstrip

- Install the weatherstrip such that its joint is positioned at the bottom-center of the glass.

Group 52

Interior

Table of Contents

Back

Home

MITSUBISHI FUSO TRUCK OF AMERICA, Inc.

Pub.No.TWME0709-52

INDEX

SPECIFICATIONS 52-2

STRUCTURE AND OPERATION

1. Air Suspension Seat 52-4

2. Emergency Locking Retractor Type Seat Belt 52-6

TROUBLESHOOTING 52-7

DRIVER SEAT 52-8

SIDE SEAT 52-12

SEAT BELT 52-13

INSTRUMENT PANEL 52-14

FLOOR CONSOLE 52-25

SCUFF PLATE, TRIM 52-26

HEAD LINING 52-30

SPECIFICATIONS

Item			Specifications	
			FK	FM
Seat adjustment method			Manual	
Seat suspension	Type		• Fixed type <Standard> • Air spring type <Option>	Air spring type
Seat belt	Driver seat	Retractor type	Emergency locking retractor type	
		Belt type	3-point support	
	Passenger seat	Retractor type	Emergency locking retractor type	
		Belt type	3-point support	

M E M O

1. Air Suspension Seat

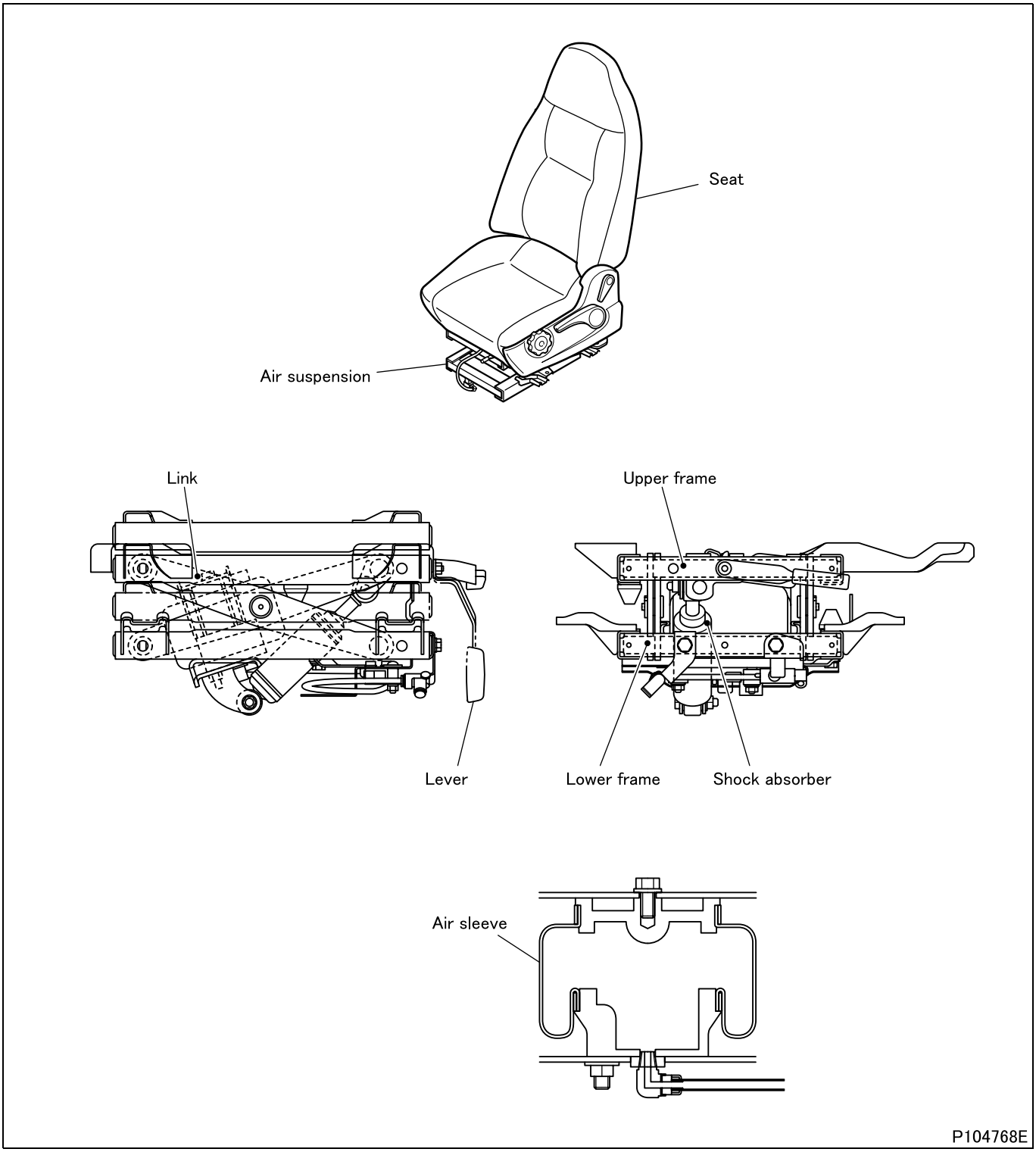

- The air suspension seat maintains the seat cushion height constant irrespective of the weight of occupants. It is provided with a mechanism which consists of cam, mechanical valves, etc. and supplies air pressure to the air sleeve automatically for constant seat cushion height.

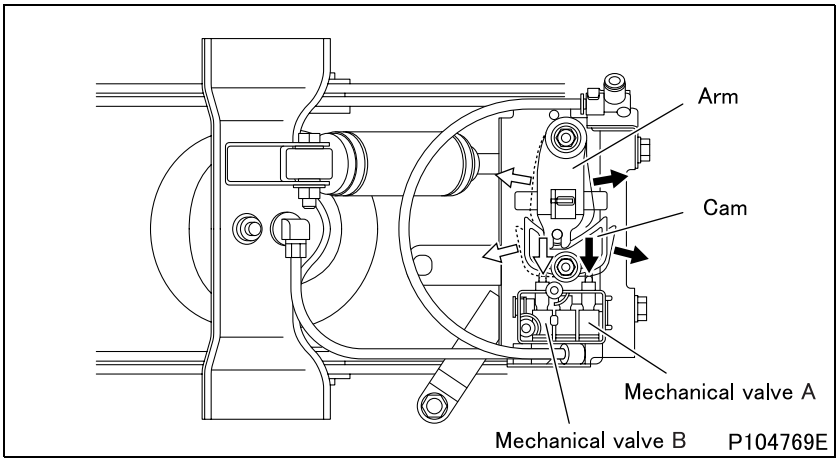

1.1 Operation of mechanical valves

- The air passage of the mechanical valves A and B opens or closes depending on the movement of the arm and the cam.

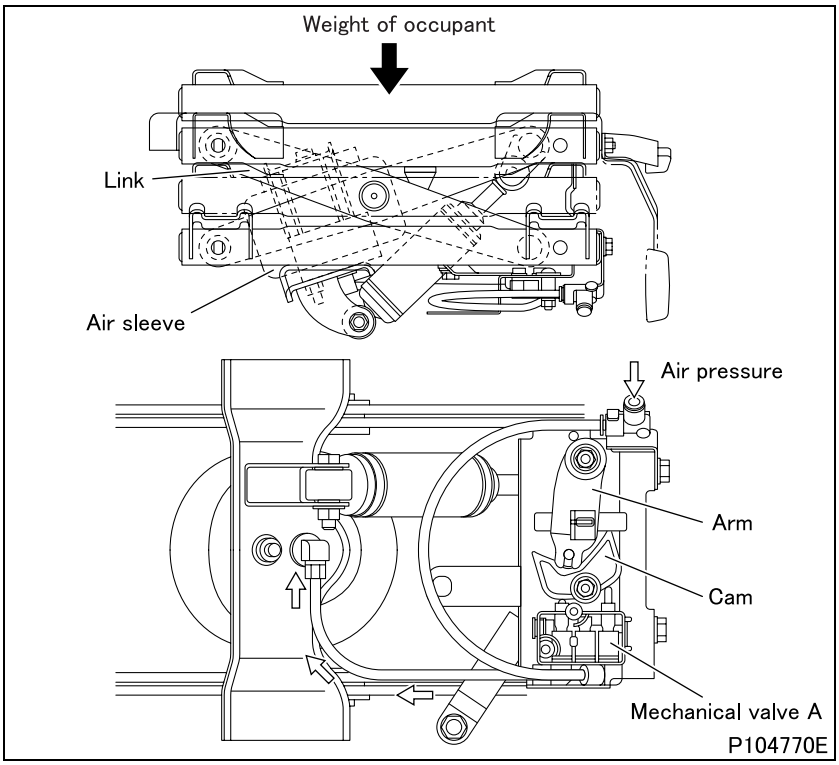

1.2 Operation of air suspension when seat is occupied

- When the weight of an occupant is applied on the seat, the link is pressed down. This allows the arm to rotate the cam slightly, opening the air passage through the valve.
- Then, air pressure is supplied and the link is raised.

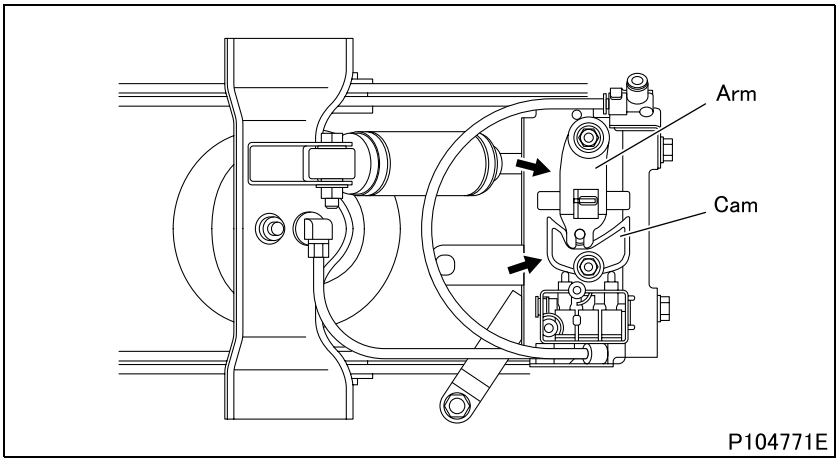

- When the link is raised, the cam is pushed back. Thus, the seat cushion returns to the original position.

2. Emergency Locking Retractor Type Seat Belt

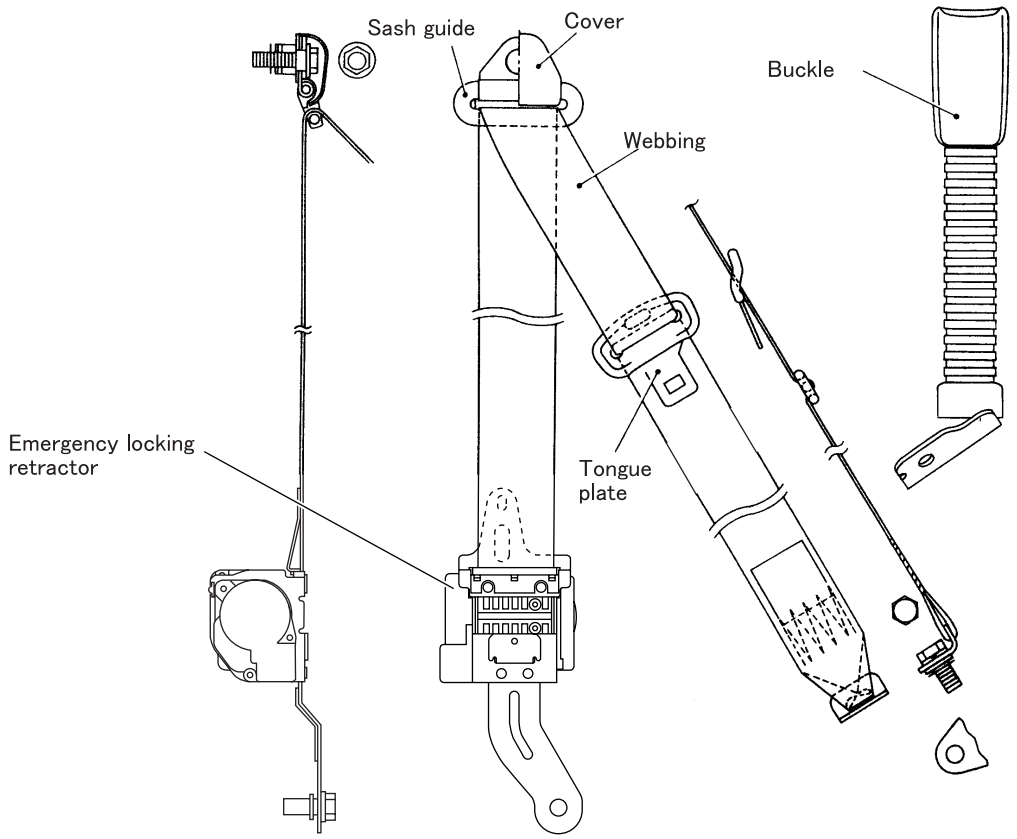

Seat Belt

Symptoms / Possible causes	Seat belt cannot be pulled out.	Seat belt fails to be retracted.	Seat belt often locks.	Tongue fails to fasten to buckle.	Shoulder anchor angle cannot be adjusted.	Reference Gr
Foreign matters in buckle insertion slot				O		
Internal defect of buckle				O		
Internal defect of emergency locking retractor	O	O	O			
Sash guide contaminated with dust and dirt		O				
Belt guide at side trim out of position	O	O				
Seat belt twisted and pinched	O	O				
Sash guide faulty					O	

DRIVER SEAT

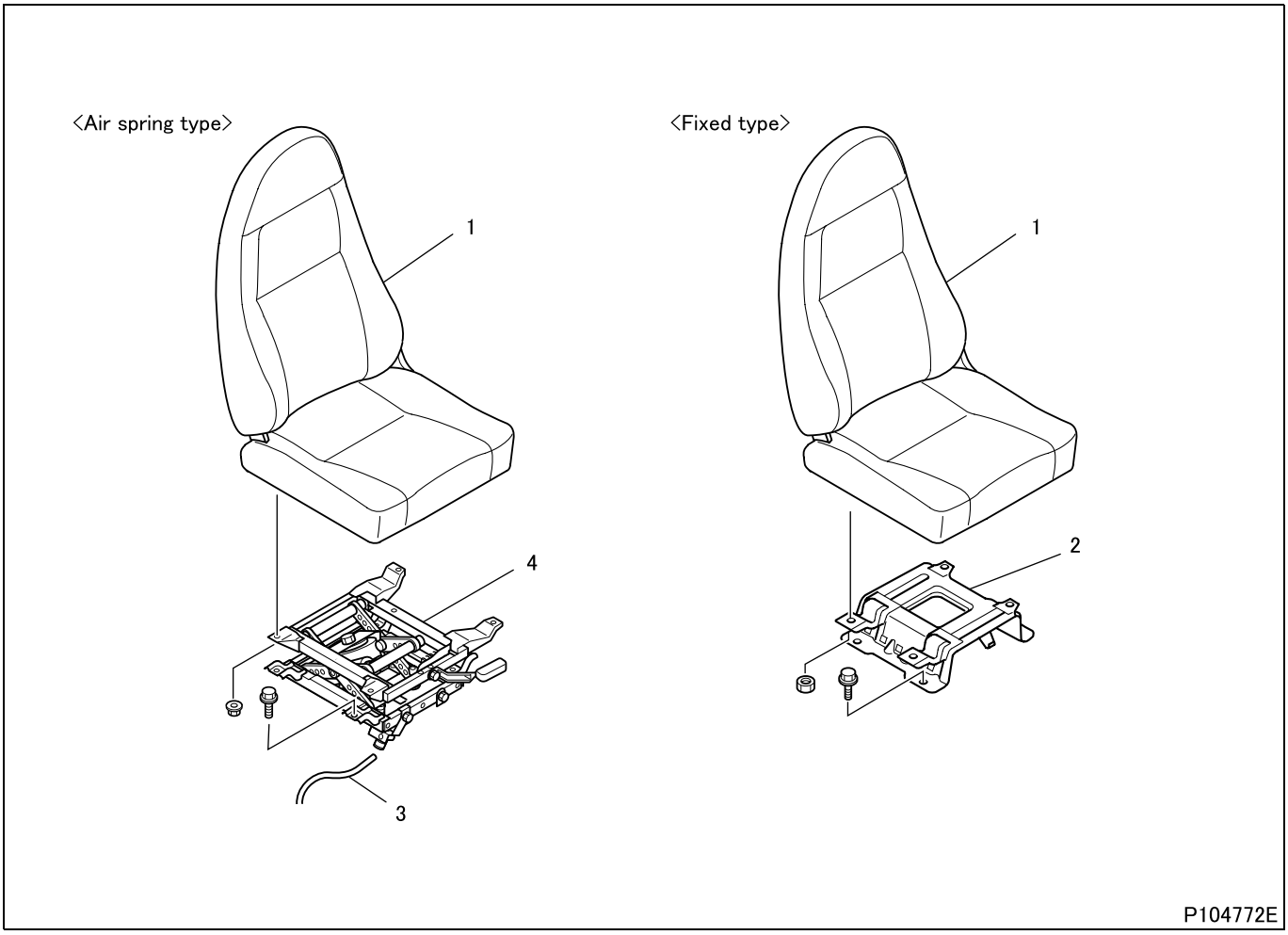

● **Removal sequence**

1 Seat (See later section.)
2 Driver seat support <Fixed type>
3 Tube <Air spring type>
4 Air suspension <Air spring type> (See later section.)

● **Installation sequence**

Follow the removal sequence in reverse.

Seat

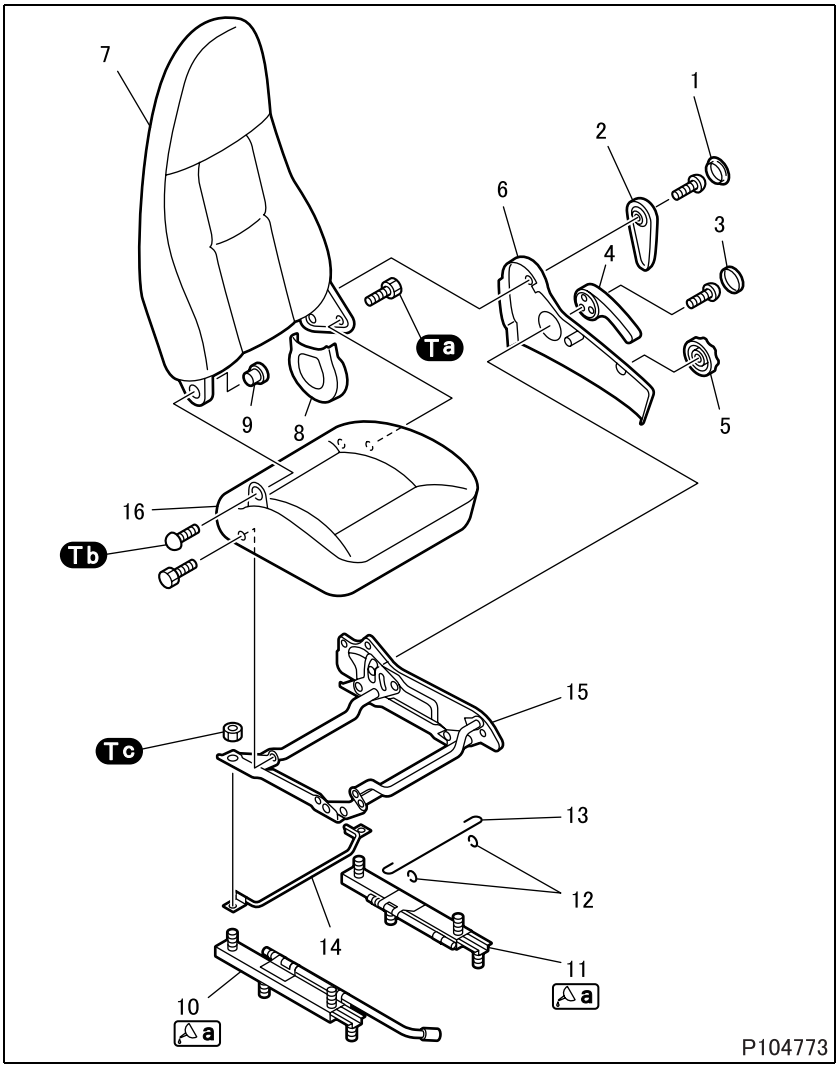

● Disassembly sequence

1 Cap
2 Reclining adjustment lever
3 Height cap
4 Height adjustment lever
5 Tilt adjustment knob
6 Shield cover
7 Seat back
8 Inner cover
9 Bushing
10 Slide adjuster, right-hand
11 Slide adjuster, left-hand
12 Clip
13 Wire
14 Bracket
15 Tilt/height adjuster
16 Seat cushion

● Assembly sequence

Follow the disassembly sequence in reverse.

Tightening torque (Unit: N·m {ft.lbs, kgf·m})

Mark	Parts to be tightened	Tightening torque	Remarks
Ta	Bolt (seatback mounting)	34.3 to 53.9 {25 to 40, 3.5 to 5.5}	–
Tb	Screw (seatback mounting)	9.8 to 14.7 {7.2 to 11, 1.0 to 1.5}	–
Tc	Nut (tilt/height adjuster mounting)	8.8 to 13.7 {25 to 40, 0.9 to 1.4}	–

Lubricant and/or sealant

Mark	Points of application	Specified lubricant and/or sealant	Quantity
a	Springs and sliding surfaces of slide adjuster	Chassis grease [NLGI No. 1 (Li soap)]	As required
	Meshing parts of gears of slide adjuster; sliding surfaces of gears of slide adjuster		
	Rivets of slide adjuster; rotating part of shaft of slide adjuster		

Air Suspension

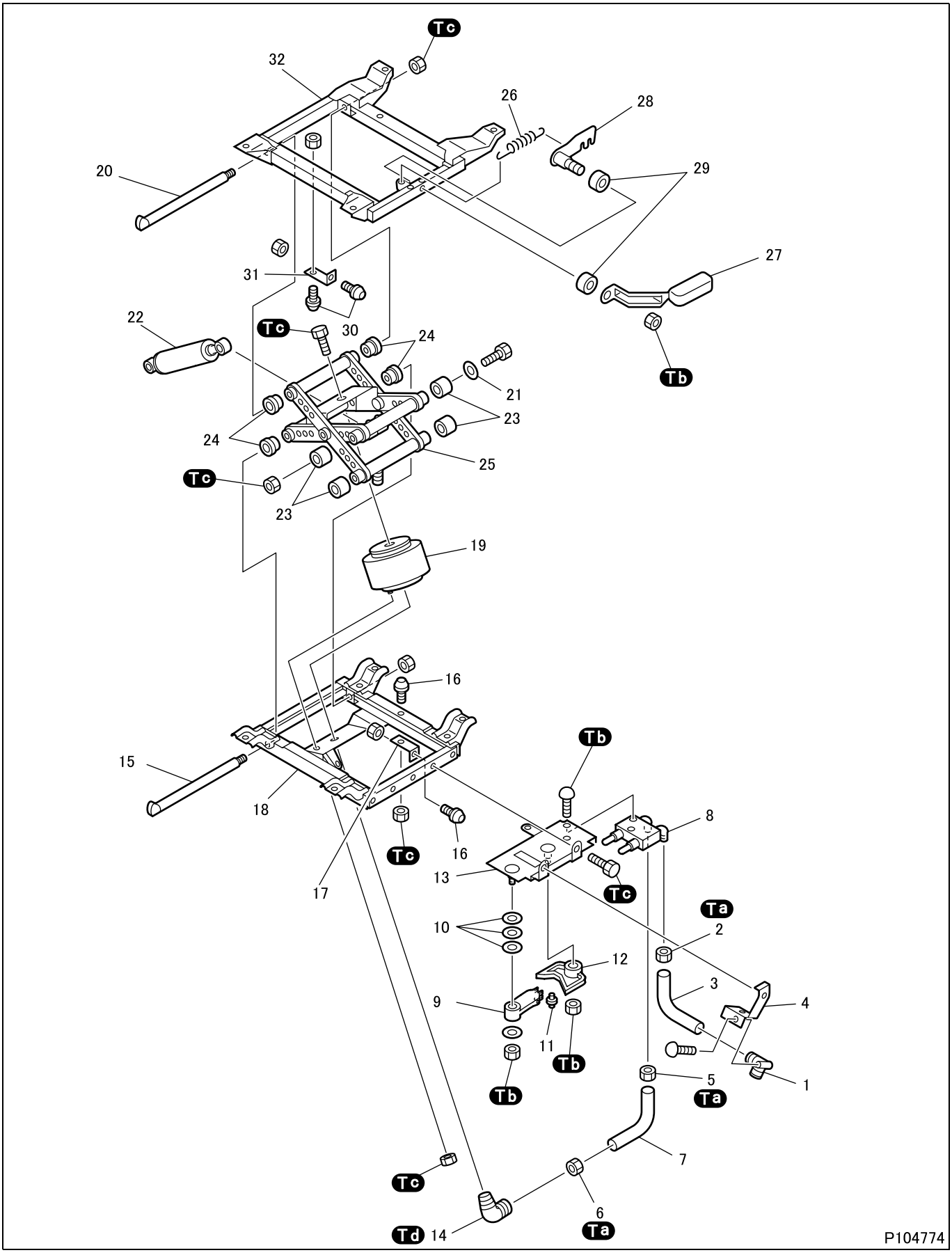

● **Disassembly sequence**

1 Connector
2 Cap
3 Nylon tube
4 Bracket
5 Cap
6 Cap
7 Nylon tube
8 Mechanical valve
9 Arm
10 Wave washer
11 Roller
12 Cam
13 Base bracket
14 Connector
15 Shaft
16 Stopper
17 Stopper bracket
18 Lower frame
19 Air sleeve
20 Shaft
21 Wave washer
22 Shock absorber
23 Cap
24 Bushing
25 Link
26 Spring
27 Lever
28 Lock
29 Bushing
30 Stopper
31 Stopper bracket
32 Upper frame

● **Assembly sequence**

Follow the disassembly sequence in reverse.

Tightening torque (Unit: N·m {ft.lbs, kgf·m})

Mark	Parts to be tightened	Tightening torque	Remarks
Ta	Cap (nylon tube mounting)	1.0 to 1.2 {0.7 to 0.9, 0.11 to 0.13}	–
Tb	Nut (arm mounting)	3.9 to 5.9 {2.9 to 4.4, 0.4 to 0.6}	–
	Nut (lever mounting)		
	Screw (valve mounting)		
	Nut (cam mounting)		
Tc	Bolt (base bracket mounting)	8.8 to 13.7 {6.5 to 10, 0.9 to 1.4}	–
	Nut (link and shaft mounting)		
	Nut (stopper mounting)		
	Bolt (air sleeve mounting)		
	Nut (air sleeve mounting)		
	Nut (shock absorber mounting)		
Td	Connector	2.4 to 2.6 {1.8 to 1.9, 0.25 to 0.27}	–

Lubricant and/or sealant

Mark	Points of application	Specified lubricant and/or sealant	Quantity
–	Sliding surfaces	Molybdenum disulfide grease [NLGI No.2 (Li soap)]	As required

SIDE SEAT

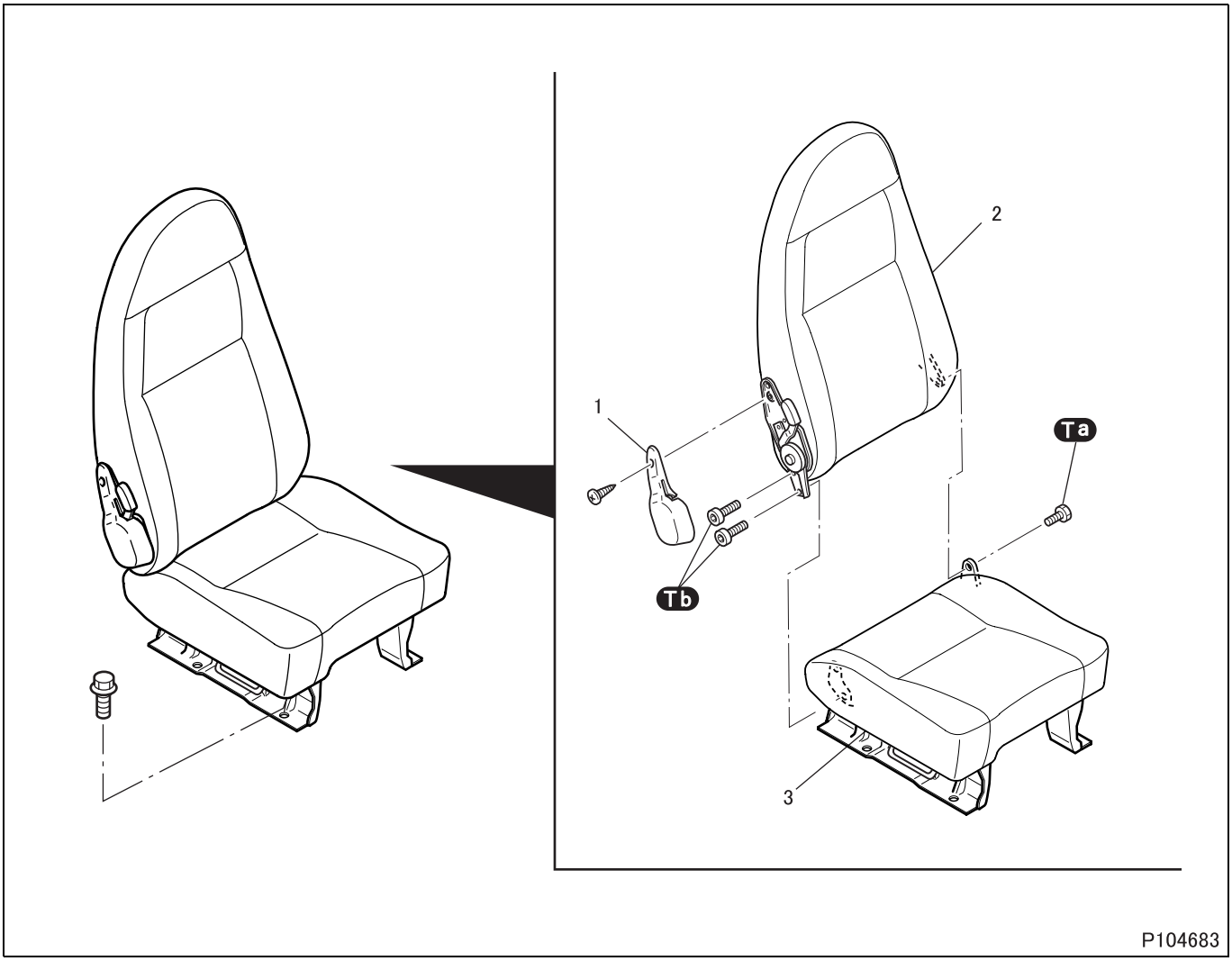

● **Disassembly sequence**

1 Reclining adjuster cover
2 Seat back
3 Seat cushion

● **Assembly sequence**

Follow the disassembly sequence in reverse.

Tightening torque (Unit: N·m {ft.lbs, kgf·m})

Mark	Parts to be tightened	Tightening torque	Remarks
Ta	Screw (seat back and seat cushion mounting)	9.8 to 14.7 {7.2 to 11, 1.0 to 1.5}	–
Tb	Bolt (seat back and seat cushion mounting)	34.3 to 53.9 {25 to 40, 3.5 to 5.5}	–

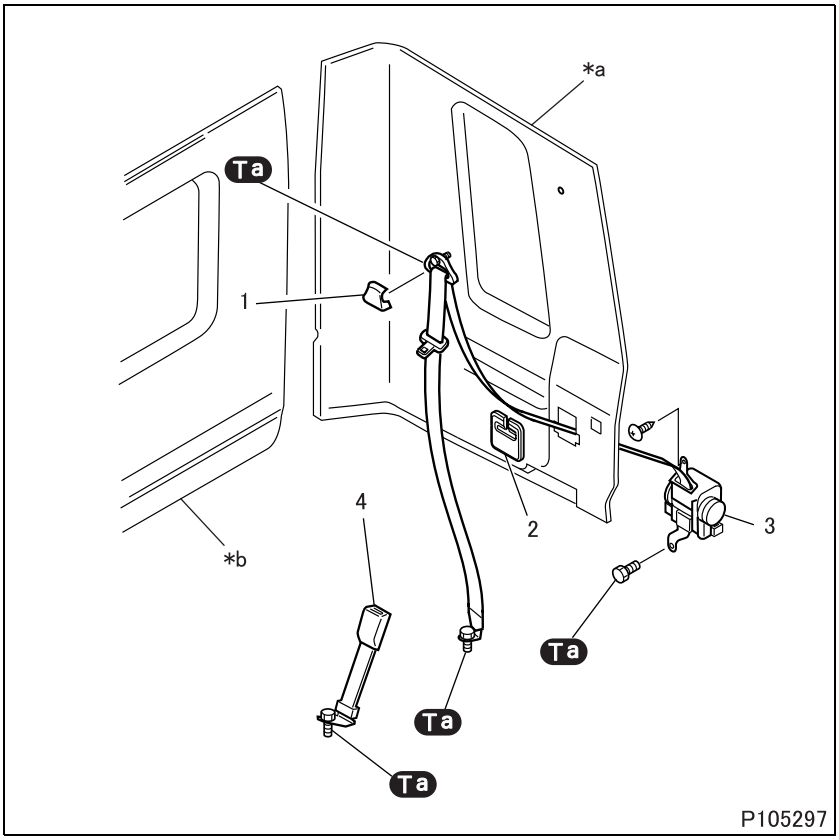

● **Removal sequence**

1 Shoulder anchor cover
2 Seat belt guide
3 Emergency locking retractor
4 Buckle

***a**: Rear trim (See later section.)
***b**: Side trim (See later section.)

● **Installation sequence**

Follow the removal sequence in reverse.

CAUTION ⚠

- **Do not disassemble the emergency locking retractor as its function is reduced.**

Tightening torque (Unit: N·m {ft.lbs, kgf·m})

Mark	Parts to be tightened	Tightening torque	Remarks
Ta	Bolt (floor anchor mounting)	34.3 to 53.9 {25 to 40, 3.5 to 5.5}	–
	Bolt (shoulder anchor mounting)		
	Bolt (emergency locking retractor mounting)		
	Bolt (buckle mounting)		

◆Removal procedure◆

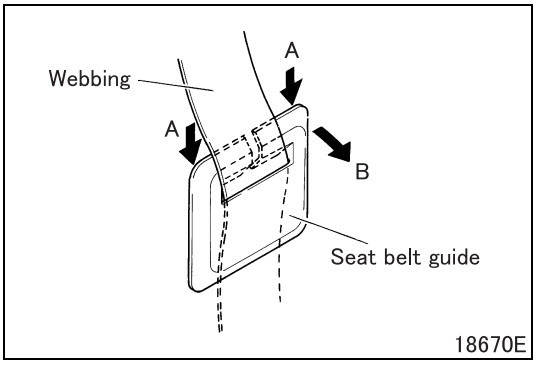

■ **Removal: Seat belt guide**

- To detach the seat belt guide, pull the top of the guide toward you in direction B while holding it down in direction A.

Area 1 (Passenger-side Panel)

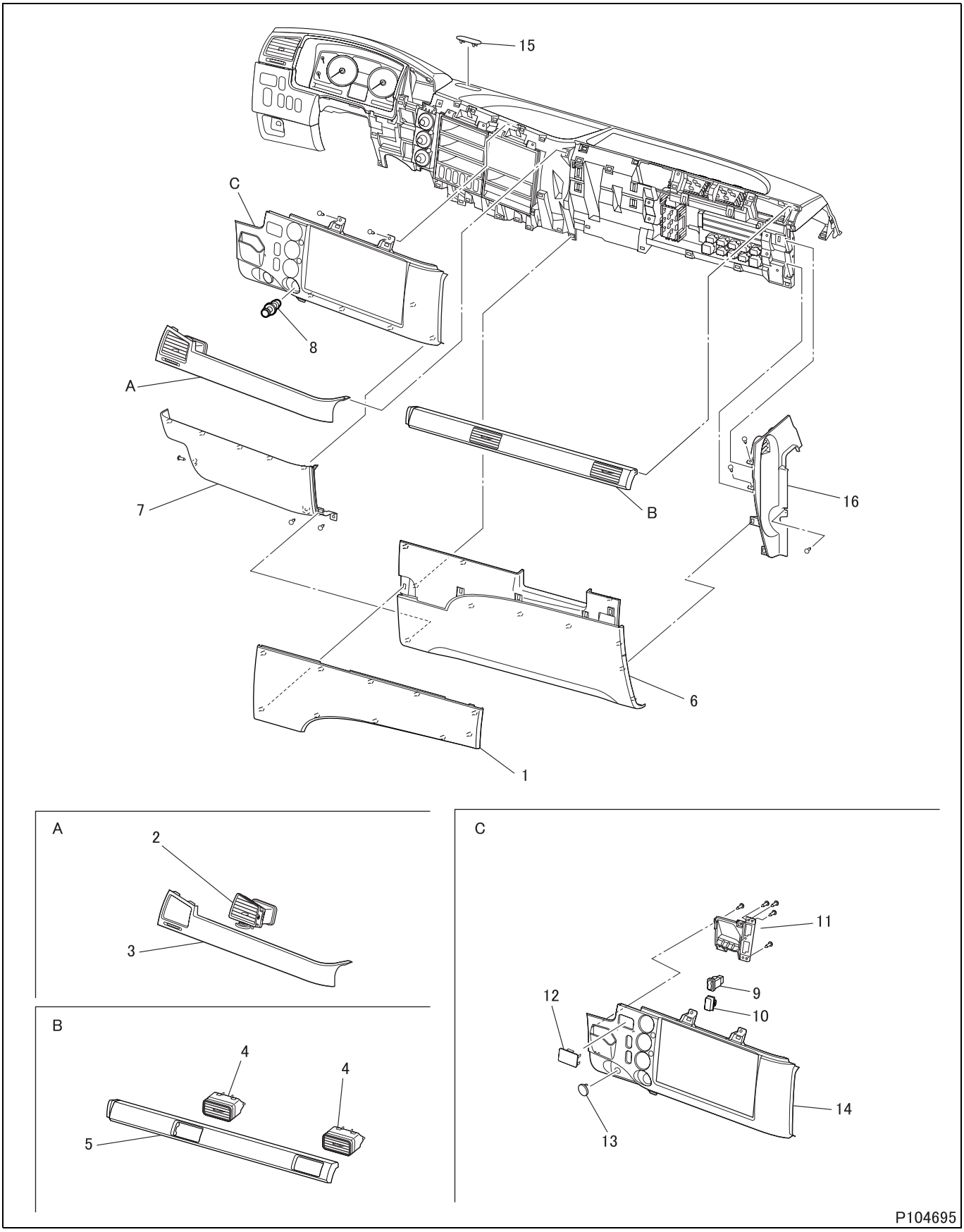

● Removal sequence

1 Upper passenger panel
2 Center air outlet
3 Center garnish
4 Passenger air outlet
5 Passenger garnish
6 Lower passenger panel
7 Lower center panel
8 Cigarette lighter
9 Auto cruise main switch
10 Plug
11 Switch plate
12 Plug A
13 Plug
14 Upper center panel
15 Instrument panel cover
16 Side passenger panel

● Installation sequence

Follow the removal sequence in reverse.

◆Removal procedure◆

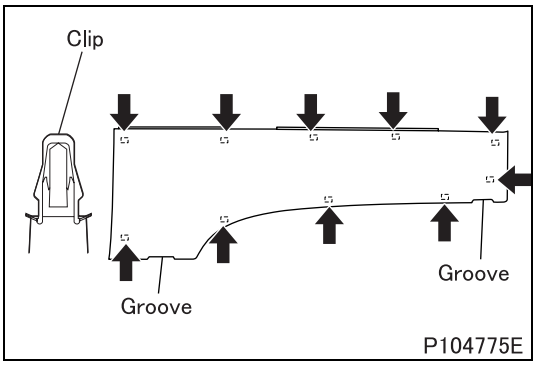

■ Removal: Upper passenger panel

- To remove the upper passenger panel, pull the panel toward you by making use of its grooves.

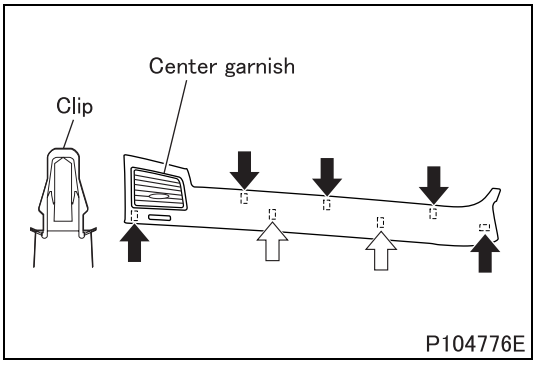

■ Removal: Center garnish

- Remove the clips around the center air outlet.
- Pull the center garnish straight toward you, using care that it will not damage the clips in ⇦ marked parts.

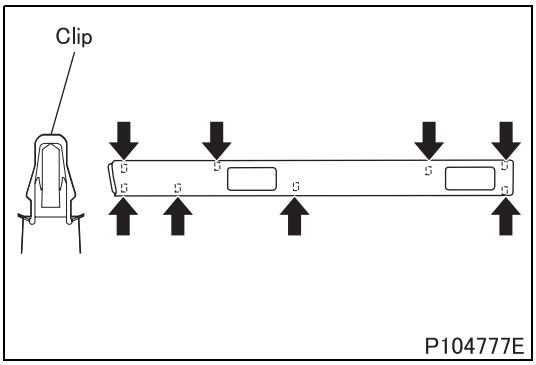

■ Removal: Passenger garnish

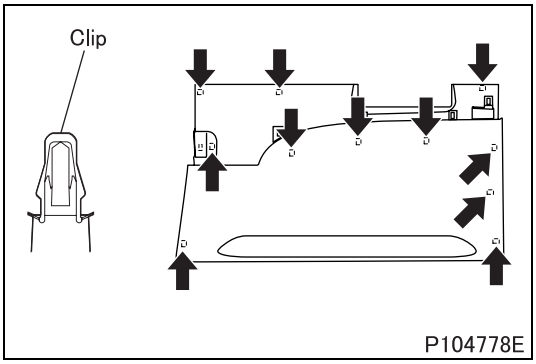

■ **Removal: Lower passenger panel**

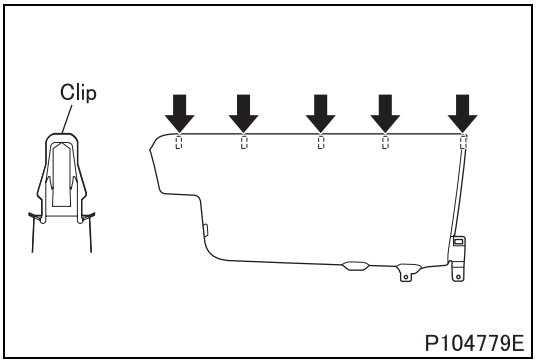

■ **Removal: Lower center panel**

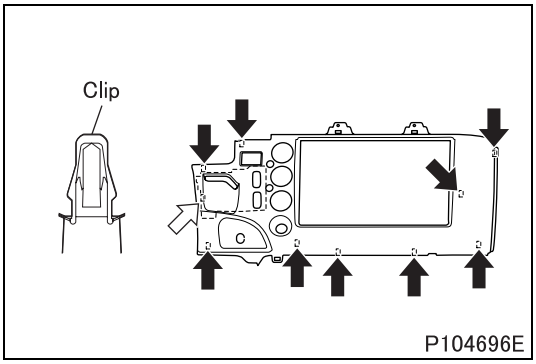

■ **Removal: Upper center panel and switch plate**

⬅ : Clip on upper center panel side (9 places)

⇦ : Clip on switch plate side (1 place)

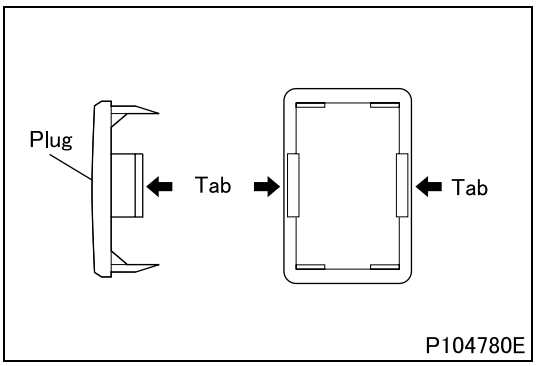

■ **Removal: Plug**

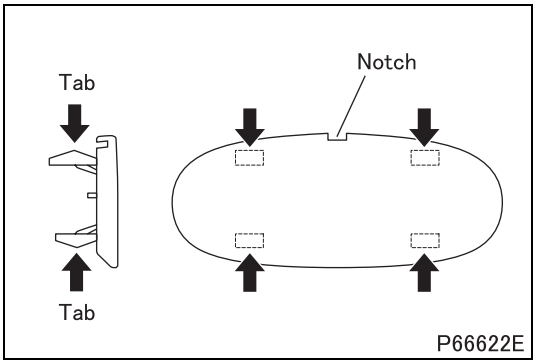

■ **Removal: Instrument panel cover**

Area 2 (Driver-side Panel)

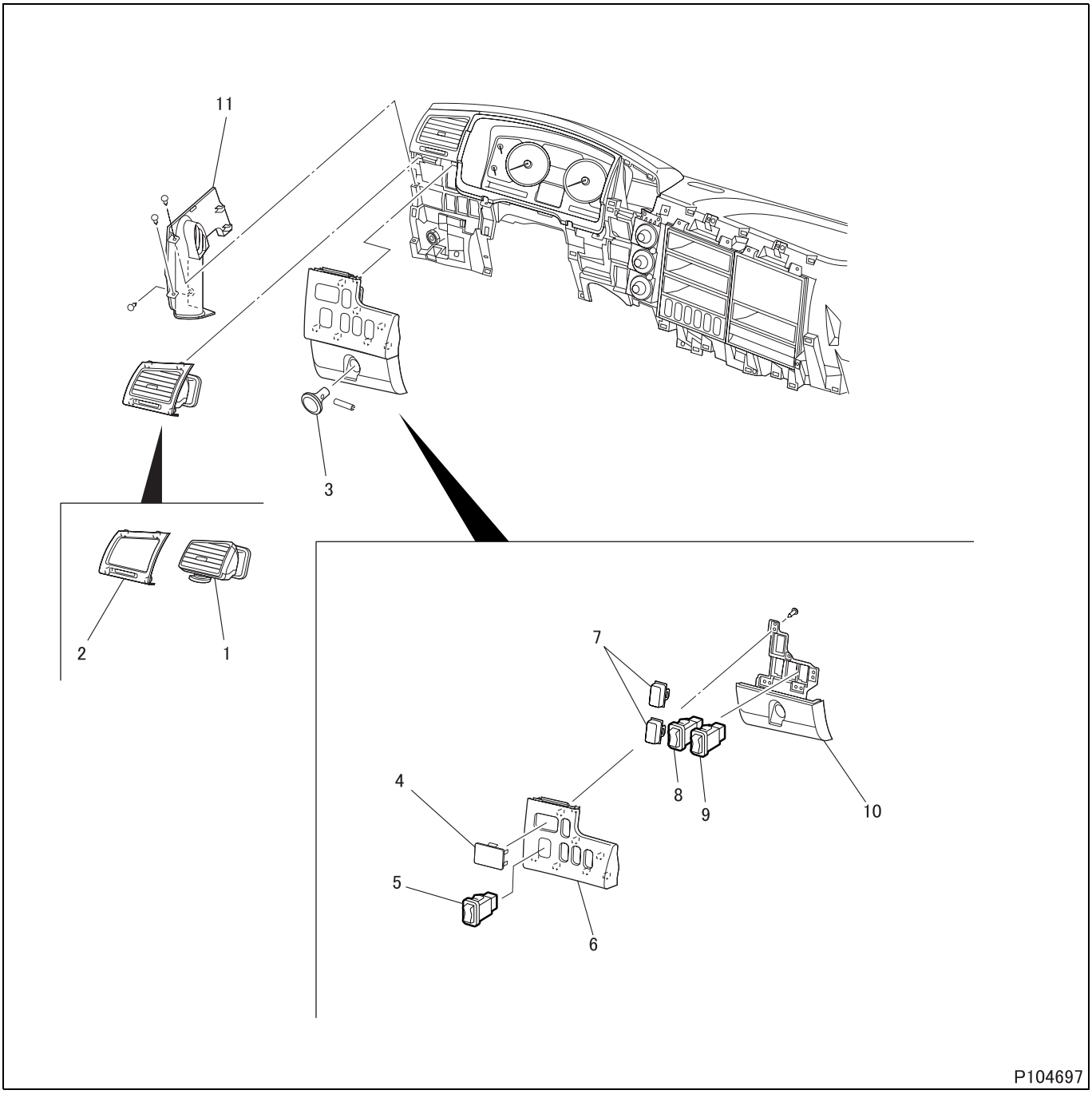

● Removal sequence

1 Driver air outlet
2 Driver garnish
3 Knob
4 Plug A
5 Rheostat switch
6 Upper driver panel
7 Plug
8 Oil level check switch
9 Door lock switch
10 Lower driver panel
11 Side driver panel

● Installation sequence

Follow the removal sequence in reverse.

◆Removal procedure◆

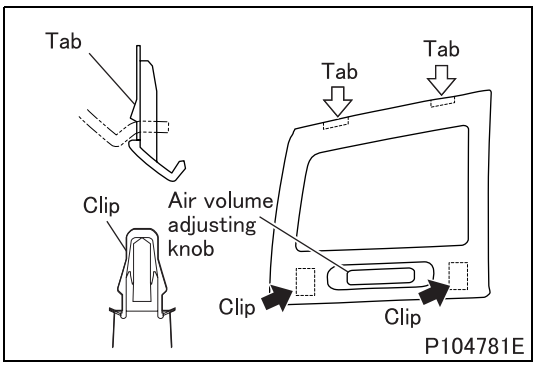

■ Removal: Driver air outlet garnish

- Be sure to set air volume adjusting knob to neutral position before removing the garnish.

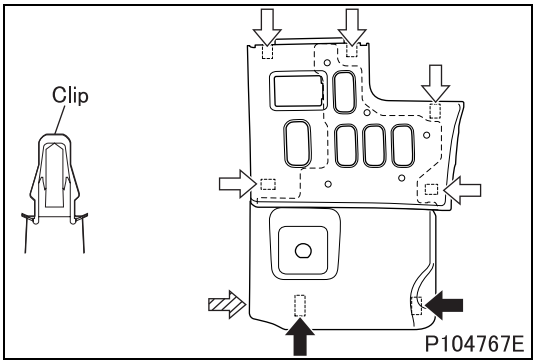

■ Removal: Lower driver panel and upper driver panel

⇦ : Clip on upper driver panel side (5 places)
⬅ : Clip on lower driver panel side (2 places)

- Remove the panels while pushing the ⇦ part of lower driver panel towards steering. Be careful not to damage the tabs of side driver panel.

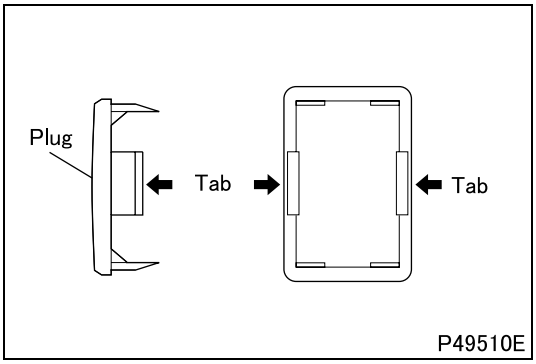

■ Removal: Plug A

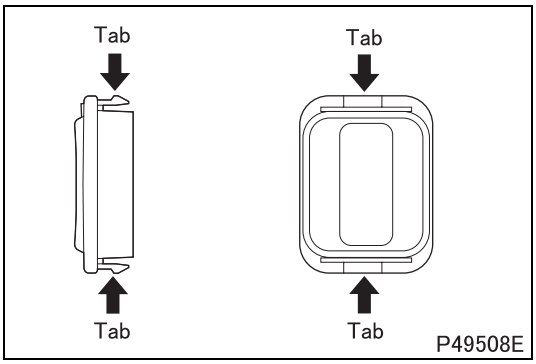

■ Removal: Plug D

Area 3 (Electrical Components)

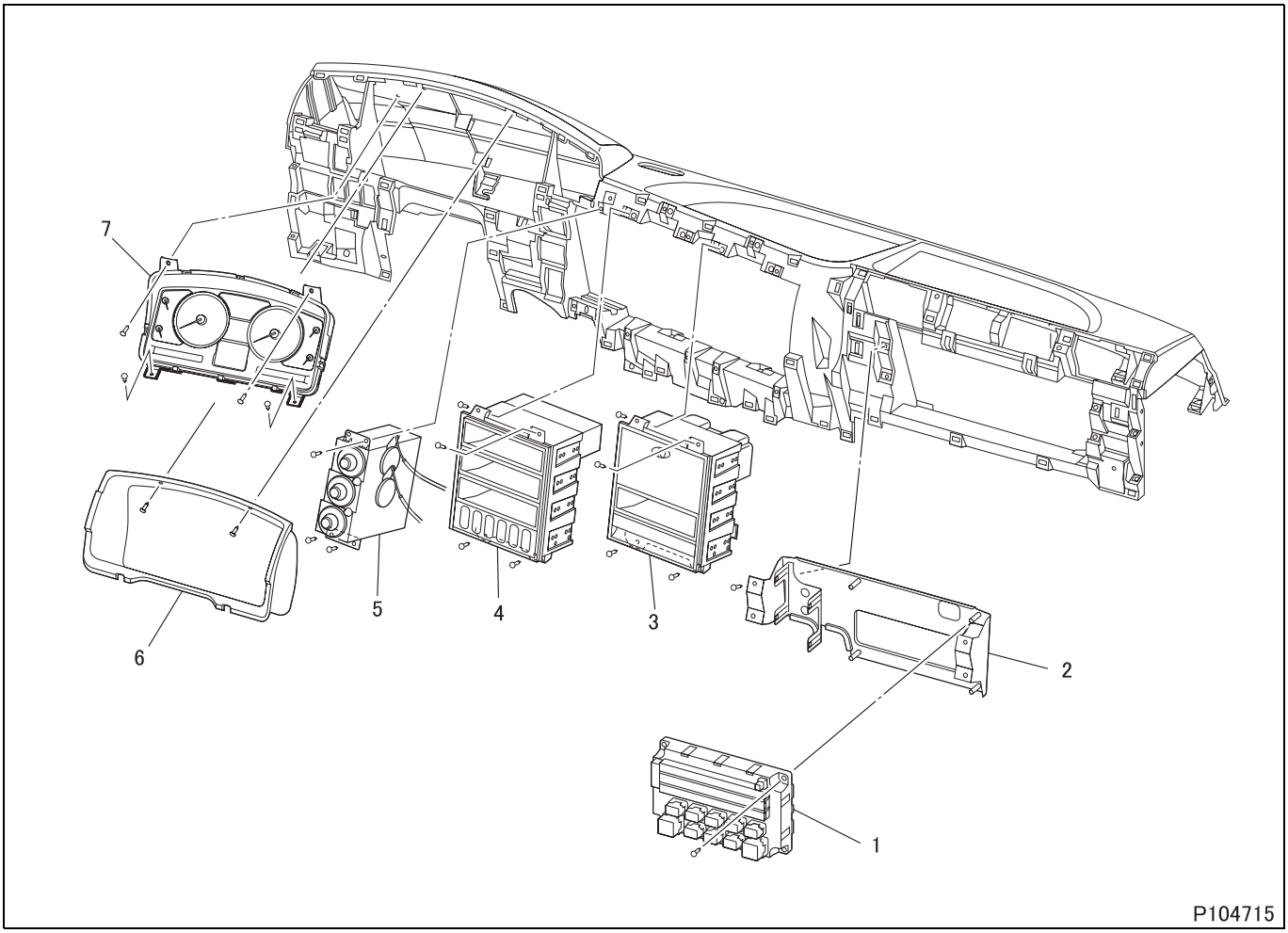

● **Removal sequence**

1 Relay and fuse box
2 Relay and fuse plate
3 Box and cup holder (See later section.)
4 Audio and switch (See later section.)
5 Heater control (See Gr55.)
6 Meter bezel
7 Meter cluster

● **Installation sequence**

Follow the removal sequence in reverse.

◆**Removal procedure**◆

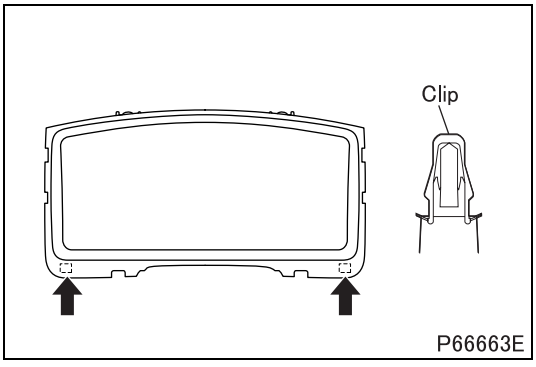

■ **Removal: Meter bezel**

Area 4 (Box and Cup Holder, Box and Switch)

<Box and cup holder>

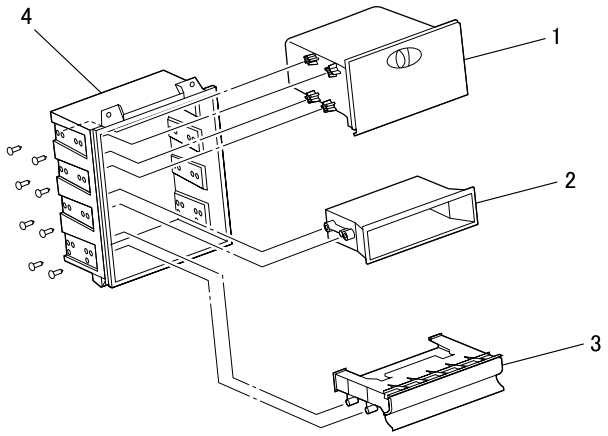

<Box and switch>

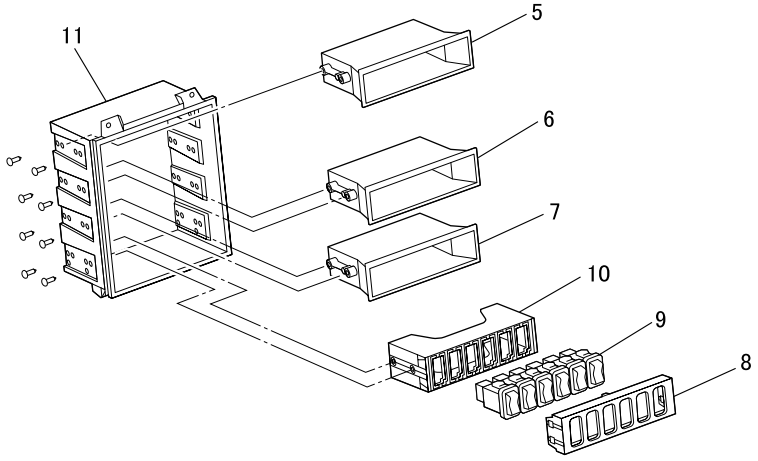

P104686E

● Disassembly sequence

1 Glove box
2 Box
3 Cup holder
4 Case
5 Box
6 Box
7 Box
8 Switch bezel
9 Switch or plug
10 Switch plate
11 Case

● Assembly sequence

Follow the disassembly sequence in reverse.

Area 5 (Instrument Panel)

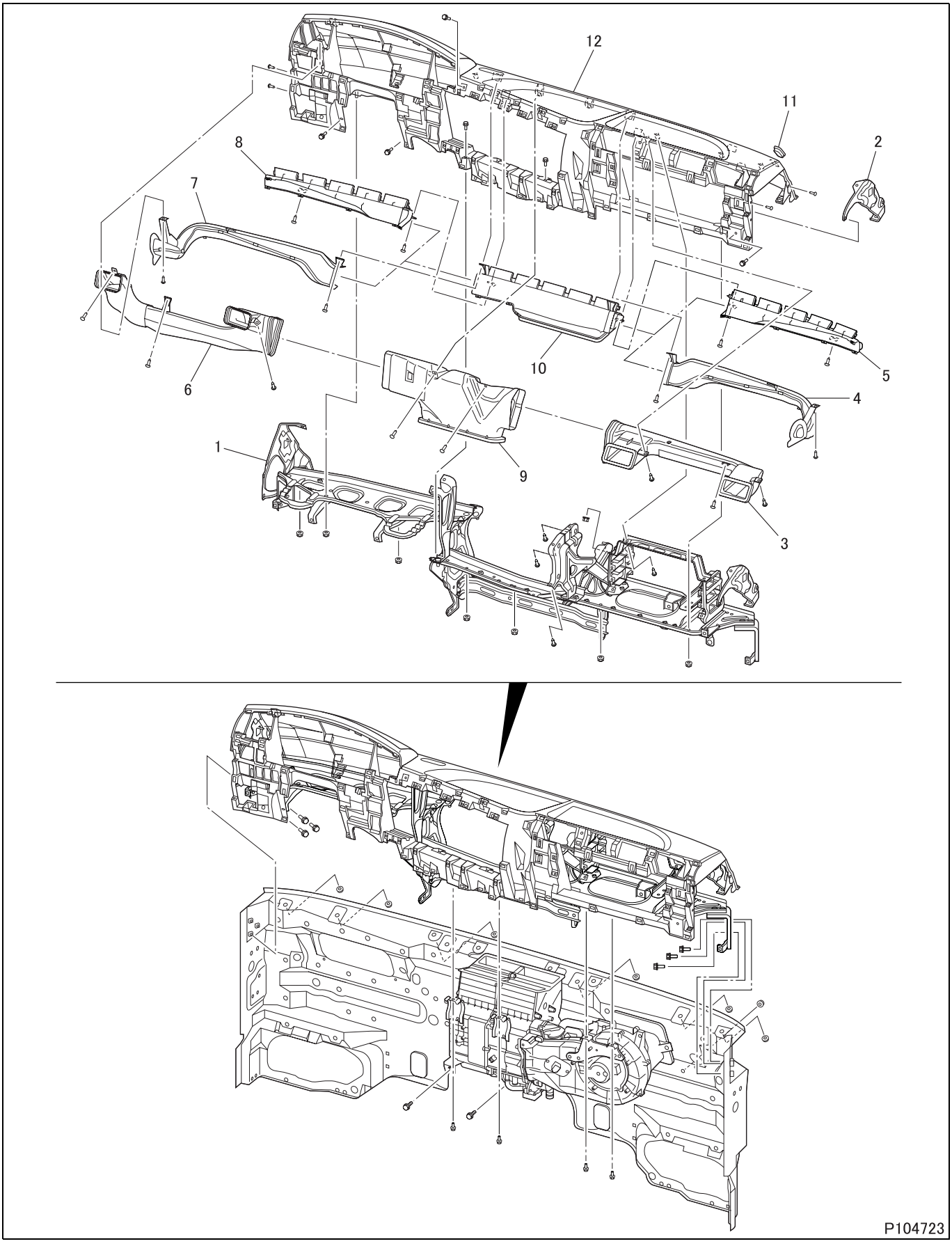

● Removal sequence

1 Instrument panel frame (See later section.)
2 Reinforcement
3 Face duct, right-hand
4 Side defroster duct, right-hand
5 Defroster duct, right-hand
6 Face duct, left-hand
7 Side defroster duct, left-hand
8 Defroster duct, left-hand
9 Center face duct
10 Center defroster duct
11 Plug
12 Instrument panel

● Installation sequence

Follow the removal sequence in reverse.

◆Removal procedure◆

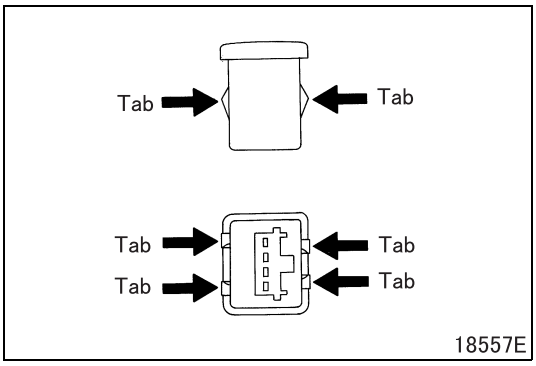

■ **Removal: Plug**

Area 6 (Instrument Panel Frame)

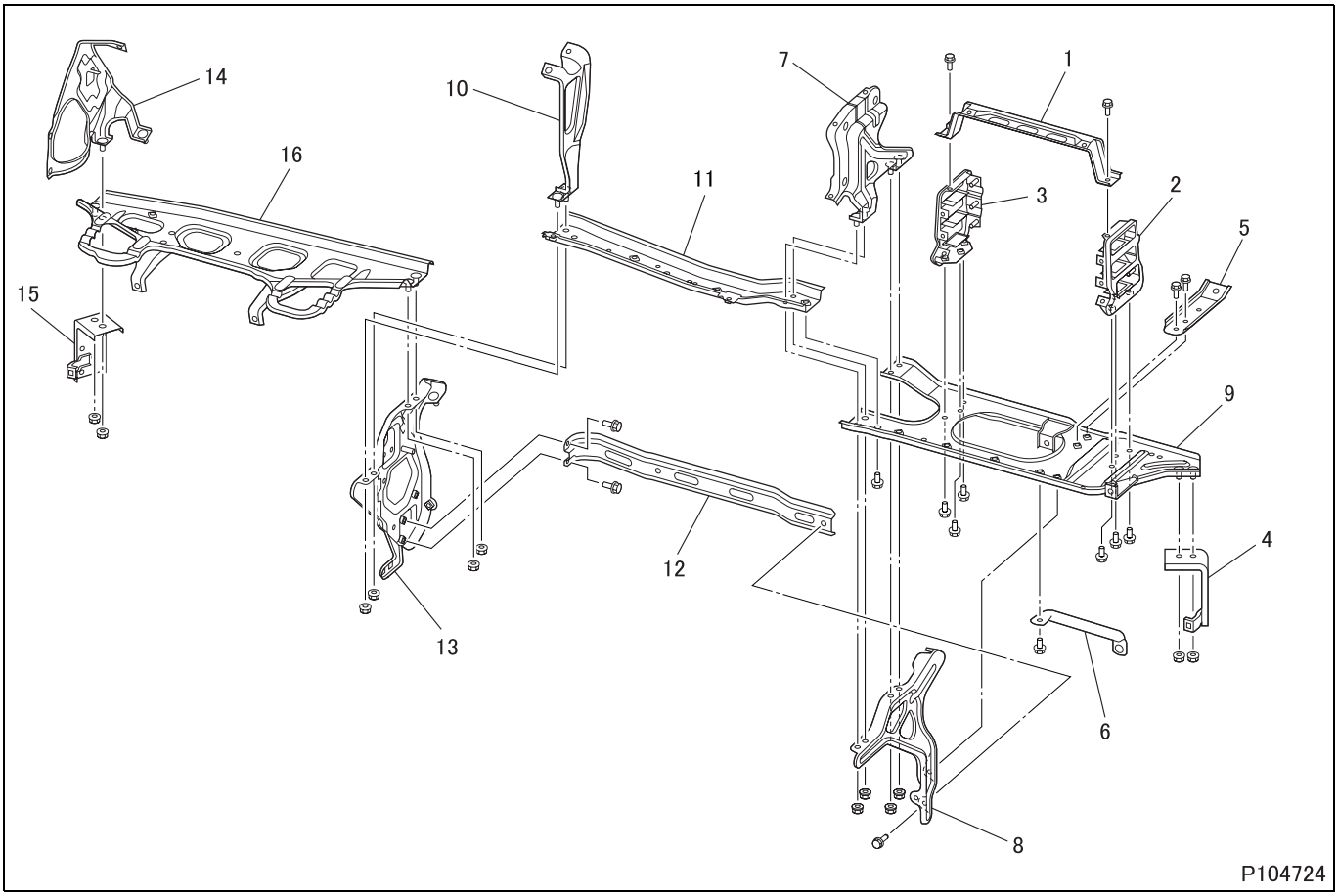

● Disassembly sequence

1 Electronic control unit frame
2 Electronic control unit frame support, right-hand
3 Electronic control unit frame support, left-hand
4 Side bracket, right-hand
5 Upper stay
6 Lower stay
7 Upper passenger instrument panel support
8 Lower passenger instrument panel support
9 Passenger instrument panel frame
10 Upper driver instrument panel support
11 Upper center instrument panel frame
12 Lower center instrument panel frame
13 Lower driver instrument panel support
14 Reinforcement
15 Side bracket, left-hand
16 Driver instrument panel frame

● Assembly sequence

Follow the disassembly sequence in reverse.

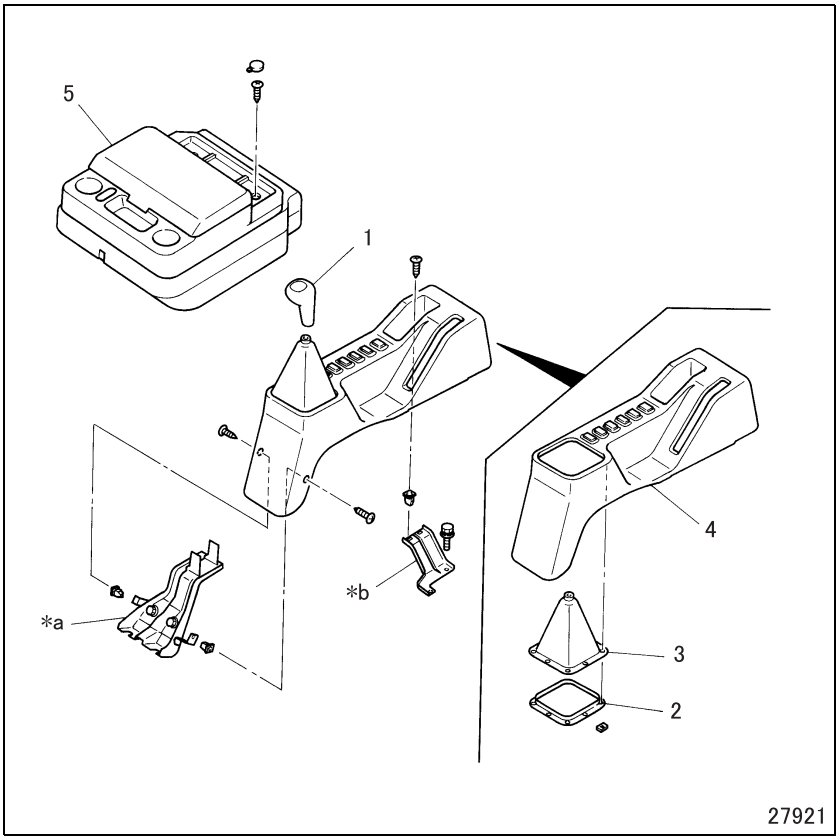

● Incidental work on removal and installation

Removal and installation of parking brake cable

● Removal sequence

1 Shift lever knob
2 Boots holder
3 Shift lever boots
4 Shift lever console
5 Center seat console

***a**: Set board (See Gr22.)
***b**: Bracket B

● Installation sequence

Follow the removal sequence in reverse.

SCUFF PLATES, TRIM

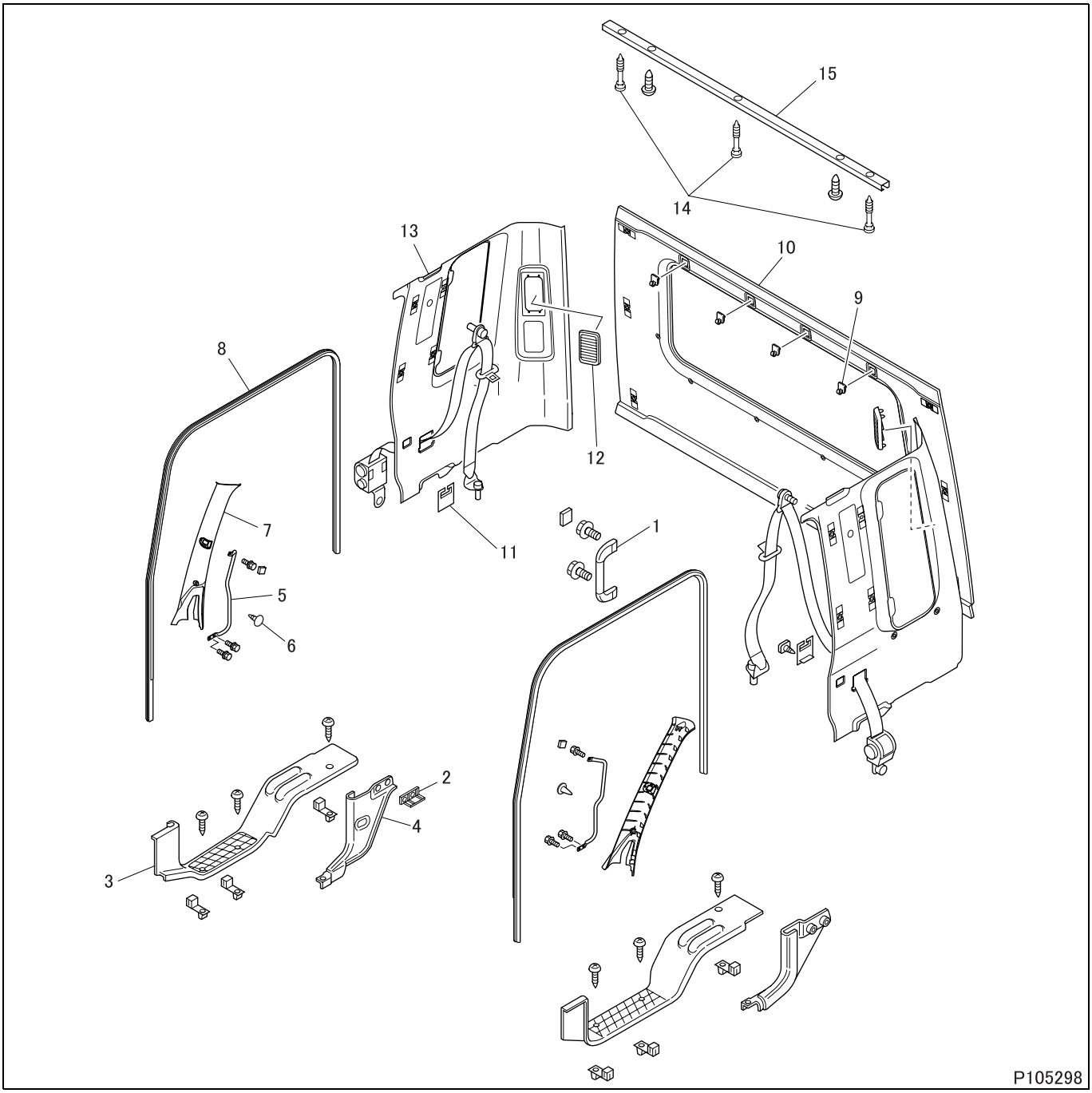

● **Removal sequence**

1 Rear pillar grip, left-hand
2 Bed side support
3 Front scuff plate
4 Rear scuff plate
5 Front pillar grip
6 Clip
7 Front pillar trim
8 Weatherstrip
9 Coat hanger
10 Rear trim
11 Seatbelt guide
12 Inside air outlet garnish
13 Rear side trim
14 Rail pin
15 Rear curtain rail

● **Installation sequence**

Follow the removal sequence in reverse.

◆Removal procedure◆

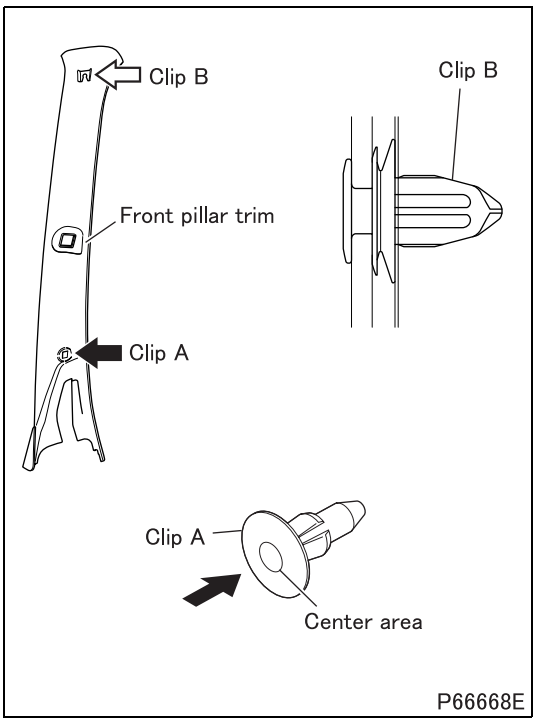

■ **Removal: Front pillar trim**

- Push at center area of clip A to remove clips A from front pillar trim.
- To unclip the front pillar trim, put your hands under the trim near at the clips B and pull it carefully toward you so as not to damage it.

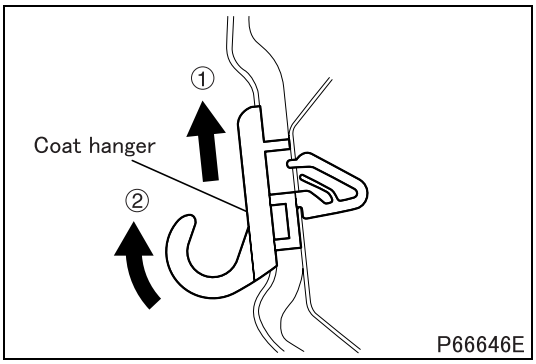

■ **Removal: Coat hanger**

- To detach the coat hanger from the rear trim, pull it in direction 2 while pushing it up in direction 1.

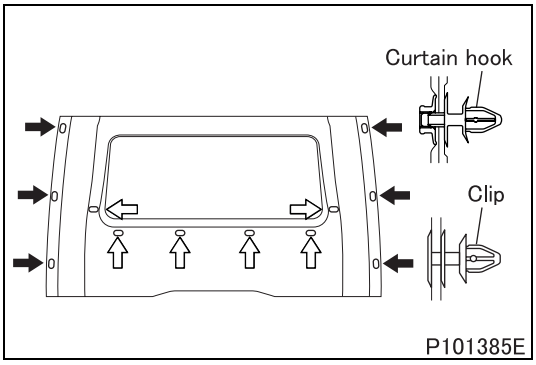

■ **Removal: Rear trim**

⬅ : Clip
⇦ : Curtain hook

- When removing clips and curtain hooks, put your hands under the rear trim near at the clips and pull it carefully toward you so as not to damage it.

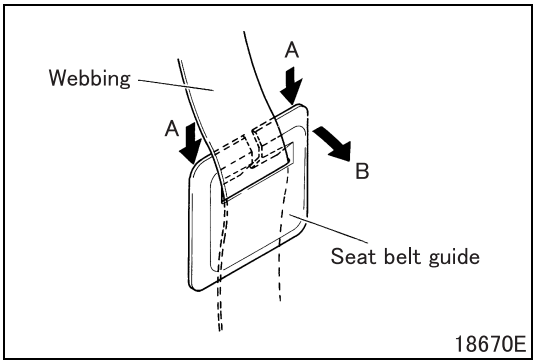

■ **Removal: Seat belt guide**

- To detach the seat belt guide, pull the top of the guide toward you in direction B while holding it down in direction A.

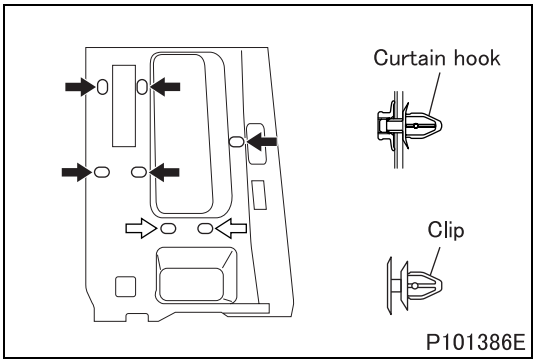

■ **Removal: Rear side trim**

◀ : Clip
⇦ : Curtain hook

- When removing clips and curtain hooks, put your hands under the rear side trim near at the clips and pull it carefully toward you so as not to damage it.

◆Installation procedure◆

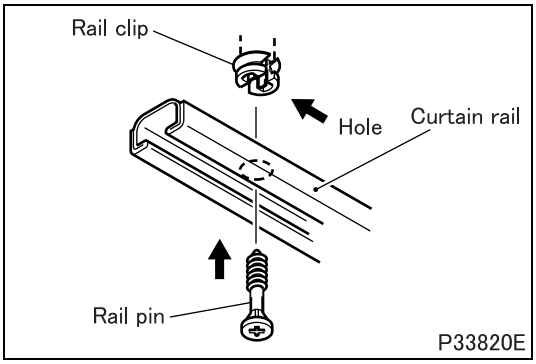

■ **Installation: Curtain rail**

- Fit the rail pin by pushing it into the hole of the rail clip to install the curtain rail.

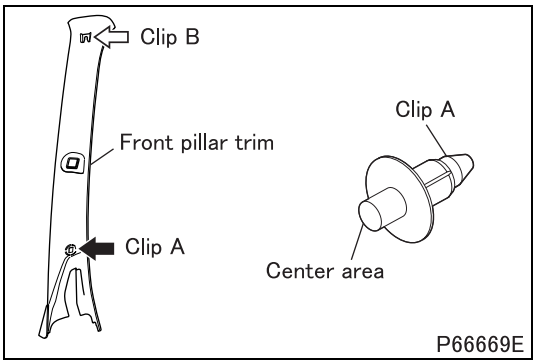

■ **Installation: Front pillar trim**

- Install the front pillar trim by pushing the center area of clip A as shown in the drawing.

M E M O

HEAD LINING

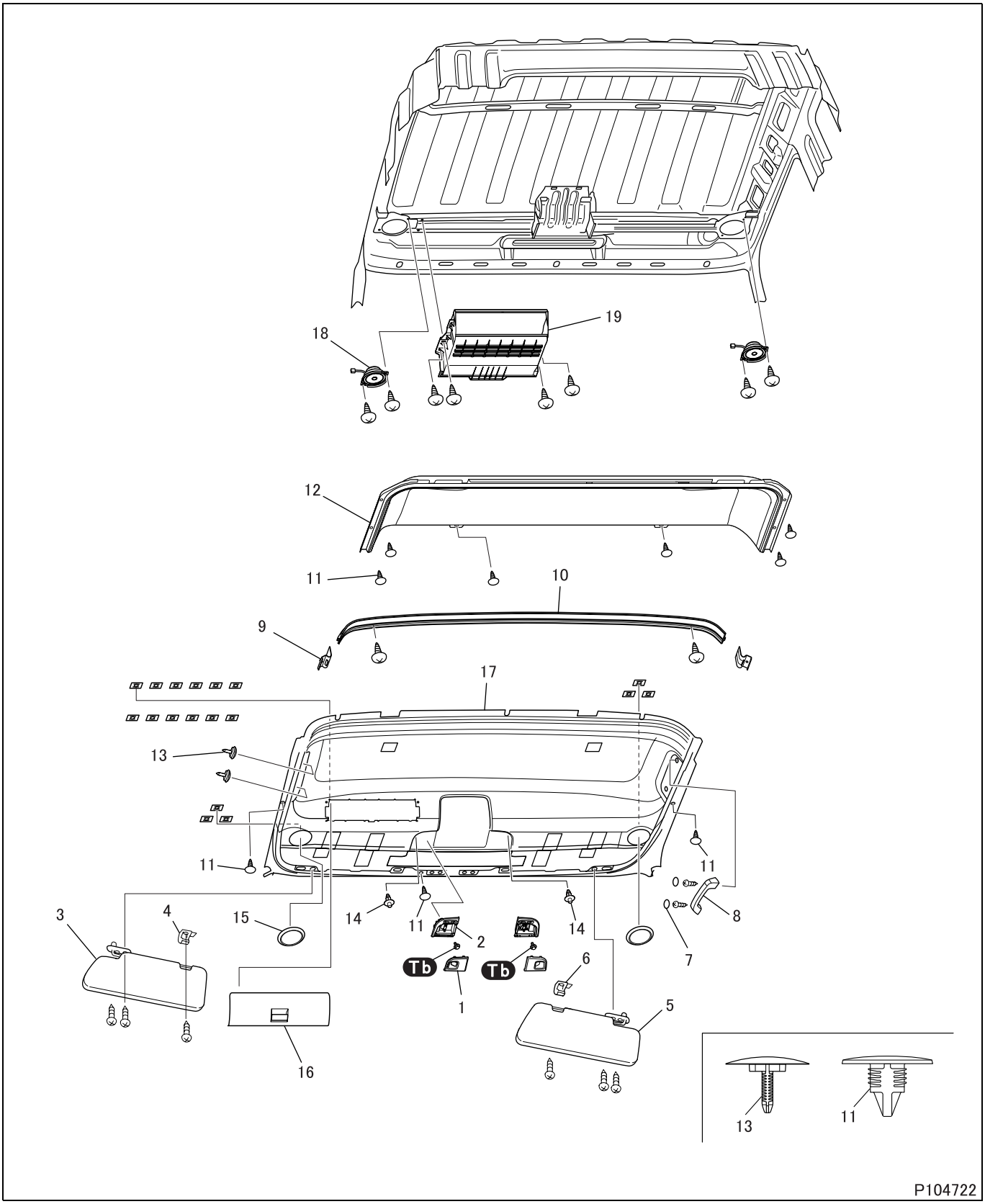
19
18
12
11
10
9
17
13
11
11
3
4
15
14
11
2
14
8
7
Tb
Tb
6
1
5
16
13
11
P104722

● **Removal sequence**

1 Lens
2 Personal lamp
3 Sun visor, left-hand
4 Sun visor hook, left-hand
5 Sun visor, right-hand
6 Sun visor hook, right-hand
7 Cap
8 Grip
9 End cover
10 Center curtain rail
11 Clip
12 Rear head lining
13 Plug
14 Clip
15 Front speaker garnish
16 Overhead console lid
17 Front head lining
18 Front speaker
19 Overhead console box

● **Installation sequence**

Follow the removal sequence in reverse.

Tightening torque (Unit: N·m {ft.lbs, kgf·m})

Mark	Parts to be tightened	Tightening torque	Remarks
Ta	Screw (lens installation)	2.0 to 3.0 {1.5 to 2.2, 0.2 to 0.3}	–
Tb	Bolt (personal lamp installation)	4.0 to 6.0 {3.0 to 4.4, 0.4 to 0.6}	–
	Bolt (fluorescent light installation)		

◆**Removal procedure**◆

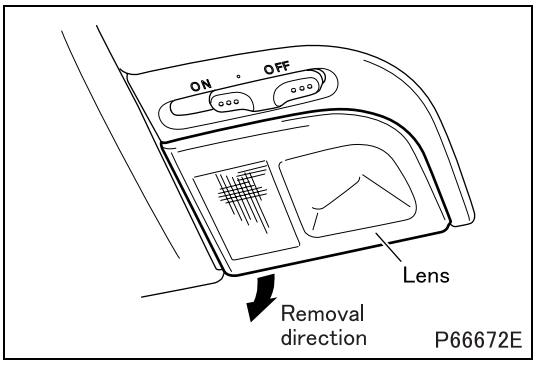

■ **Removal: Lens**

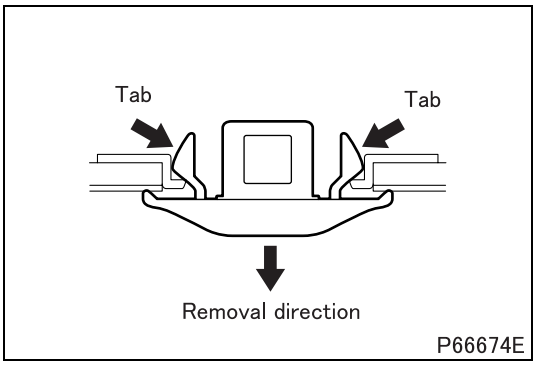

■ **Removal: Inside air temperature sensor**

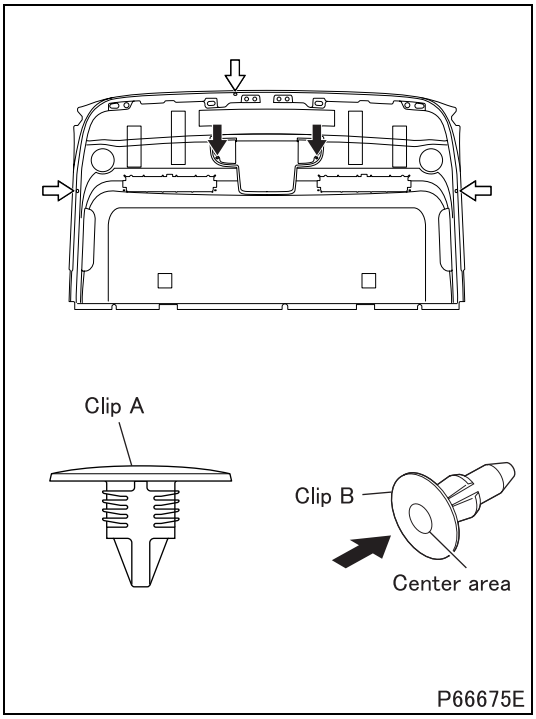

■ **Removal: Front head lining**

- Remove clips A (3 places marked with ⇦) to remove the front head lining.
- Remove clips B (2 places marked with ⬅) from the front head lining by pushing the center area.

◆Installation procedure◆

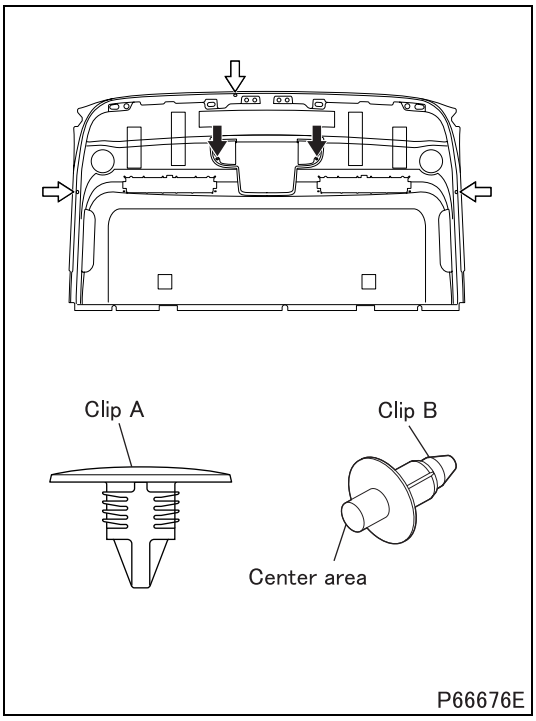

■ **Installation: Front head lining**

- Install clips B (2 places marked with ⬅) to the front head lining by pushing the center area as shown in the drawing.
- Install clips A (3 places marked with ⇦) to install the front head lining.

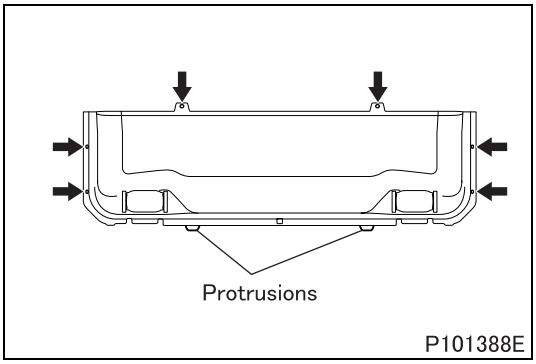

■ **Installation: Rear head lining**

- Insert protrusions of rear head lining into the grooves of the panel on the cab side and install the rear head lining with clips (6 places).

Group 54

Electrical

Table of Contents

Back

Home

MITSUBISHI FUSO TRUCK OF AMERICA, Inc.

Pub.No.TWME0806-54

INDEX

HOW TO READ THIS GROUP 2

54-00A GENERAL

PRECAUTIONS FOR MAINTENANCE OPERATION 54-00A-2

54-00B SPECIFICATIONS

SPECIFICATIONS..... 54-00B-2

54-00C STRUCTURE AND OPERATION

1. Starter 54-00C-2
2. Alternator..... 54-00C-3
3. Headlamps..... 54-00C-6
4. Meter Cluster..... 54-00C-7
5. Daytime Running Light (DRL) System... 54-00C-18
6. MUTIC (Multipurpose Timing Control Unit)..... 54-00C-20
7. Starter Continuous Energizing Preventing Function and Preheating Function 54-00C-23

54-00D TROUBLESHOOTING

TROUBLESHOOTING 54-00D-2

54-01 POWER, CHARGE AND GROUND CIRCUIT

HIGH-CURRENT FUSE BOX..... 54-01-2

RELAY AND FUSE BOX 54-01-4

(104) RELAY AND FUSE BOX CIRCUIT..... 54-01-6

(110) POWER CIRCUIT 54-01-7

(115) RESERVE POWER CIRCUIT 54-01-19

(125) BATTERY CHARGING CIRCUIT..... 54-01-20

(130) GROUND 54-01-22

54-02 STARTING AND PRE-HEATING CIRCUIT

(210) ENGINE STARTING CIRCUIT..... 54-02-2

(215) ENGINE STOPPING CIRCUIT ..... (See Gr13EA.)

(220) ENGINE PREHEATING CIRCUIT..... 54-02-8

54-03 LIGHTING CIRCUIT

(310) HEADLAMP CIRCUIT 54-03-2

(313) DAYTIME RUNNING LIGHT CIRCUIT..... 54-03-4

(320) TAIL, CLEARANCE AND LICENSE PLATE LAMPS CIRCUIT 54-03-6

(325) STOP LAMP CIRCUIT..... 54-03-7

(330) TURN SIGNAL AND HAZARD LAMP CIRCUIT..... 54-03-8

(340) BACKUP LAMP CIRCUIT 54-03-10

(345) CAB LAMP CIRCUIT..... 54-03-13

(348) ILLUMINATION LAMP CIRCUIT..... 54-03-14

(349) IDENTIFICATION AND SIDE MARKER LAMP CIRCUIT..... 54-03-15

(352) VAN BODY DOME LIGHT CIRCUIT..... 54-03-16

54-04 METER CIRCUIT

(401) METER CLUSTER INTERNAL CIRCUIT 54-04-2
(410) TACHOMETER CIRCUIT..... 54-04-4
(412) SPEEDOMETER CIRCUIT 54-04-5
(420) FUEL GAUGE CIRCUIT 54-04-8
(425) WATER TEMPERATURE GAUGE CIRCUIT 54-04-9
(436) AIR GAUGE CIRCUIT.....54-04-10

54-05 INDICATOR AND WARNING LAMP CIRCUIT

(510) PARKING BRAKE INDICATOR CIRCUIT 54-05-2
(515) BRAKE WARNING CIRCUIT..... 54-05-4
(530) WATER LEVEL AND OVERHEATING WARNING CIRCUIT 54-05-6
(535) ENGINE OIL LEVEL WARNING CIRCUIT 54-05-7
(536) ENGINE OIL PRESSURE WARNING CIRCUIT 54-05-8
(538) ENGINE OIL FILTER WARNING CIRCUIT 54-05-9
(550) CAB TILT WARNING CIRCUIT ... 54-05-10
(566) FUEL FILTER WARNING CIRCUIT 54-05-11

54-06 CAB SIDE ELECTRICAL CIRCUIT

(610) CIGARETTE LIGHTER CIRCUIT .. 54-06-2
(612) AUDIO CIRCUIT 54-06-3
(614) WIPER AND WASHER CIRCUIT 54-06-4
(616) HORN CIRCUIT 54-06-5
(620) AIR-CONDITIONER CIRCUIT 54-06-6
(622) POWER WINDOW AND CENTRAL DOOR LOCK CIRCUIT 54-06-8
(629) MIRROR HEATER CIRCUIT 54-06-9

54-07 CHASSIS SIDE ELECTRICAL CIRCUIT

(710) EXHAUST BRAKE CIRCUIT..... 54-07-2
(718) AIR DRYER CIRCUIT 54-07-5
(722) AIR SUSPENSION CIRCUIT 54-07-6

54-08 ENGINE AND TRANSMISSION SIDE ELECTRICAL CIRCUIT

(850) TRANSMISSION POWER TAKE-OFF CIRCUIT..... 54-08-2

54-09 OTHER CIRCUIT

(905) JOINT CONNECTOR (J/C).....54-09-2
COMMON RAIL SYSTEM ELECTRIC CIRCUIT DIAGRAM ..... (See Gr13EA.)
CRUISE CONTROL SYSTEM ELECTRIC CIRCUIT DIAGRAM..... (See Gr13EB.)
AUTOMATIC TRANSMISSION SYSTEM ELECTRIC CIRCUIT DIAGRAM
<(Allison 1000RDS, 2200RDS)>
..... (See Gr23A.)
<(Allison 3000RDS)>
..... (See Gr23B.)
ANTI-LOCK BRAKE SYSTEM ELECTRIC CIRCUIT DIAGRAM..... (See Gr35E.)

54-10 ELECTRICAL EQUIPMENT INSTALLATION POSITIONS

Cab side

A SWITCH 54-10-2

B RELAY AND ELECTRONIC CONTROL UNIT 54-10-4

C METER, SENSOR, BUZZER AND MOTOR 54-10-8

D AIR-CONDITIONER 54-10-10

E DOOR AND MIRROR 54-10-11

F ROOF 54-10-12

G CAB 54-10-13

H CAB TILT 54-10-14

J JOINTS OF MAIN HARNESS CONNECTORS 54-10-16

Engine and transmission

R ENGINE 54-10-19

S TRANSMISSION 54-10-20

Chassis side

T SWITCH AND SENSOR 54-10-22

U FUSE AND CONNECTORS 54-10-26

V MAGNETIC VALVE 54-10-28

W BUZZER 54-10-28

X OTHER 54-10-30

54-11 INSPECTION OF ELECTRICAL EQUIPMENT

#001 to #179 SWITCH 54-11-2

#180 to #249 RELAY 54-11-9

#250 to #349 SENSOR 54-11-10

#350 to #409 CONTROL UNIT 54-11-13

#410 to #509 MOTOR 54-11-14

#510 to #539 ACTUATOR 54-11-15

#560 to #609 MAGNETIC VALVE 54-11-16

#610 to #649 BUZZER, HORN 54-11-17

#650 to #699 LAMP 54-11-17

#750 to #859 OTHER 54-11-18

#860 BATTERY 54-11-21

#890 METER 54-11-24

54-12 STARTER AND ALTERNATOR

#930 STARTER 54-12-2

#940 ALTERNATOR 54-12-16

54-13 ON-VEHICLE INSPECTION AND ADJUSTMENT

#950 INSPECTION OF ALTERNATOR .. 54-13-2

#951 INSPECTION OF REGULATOR 54-13-3

#955 INSPECTION OF PREHEATING SYSTEM 54-13-4

#960 HEADLAMP AIMING 54-13-6

#965 INSPECTION OF BRAKE FLUID LEVEL SWITCH 54-13-8

54-14 CONNECTOR CONFIGURATION CHART

CONNECTOR CONFIGURATION CHART 54-14-2

HOW TO READ THIS GROUP

HOW TO READ CIRCUITS (ELECTRICAL)

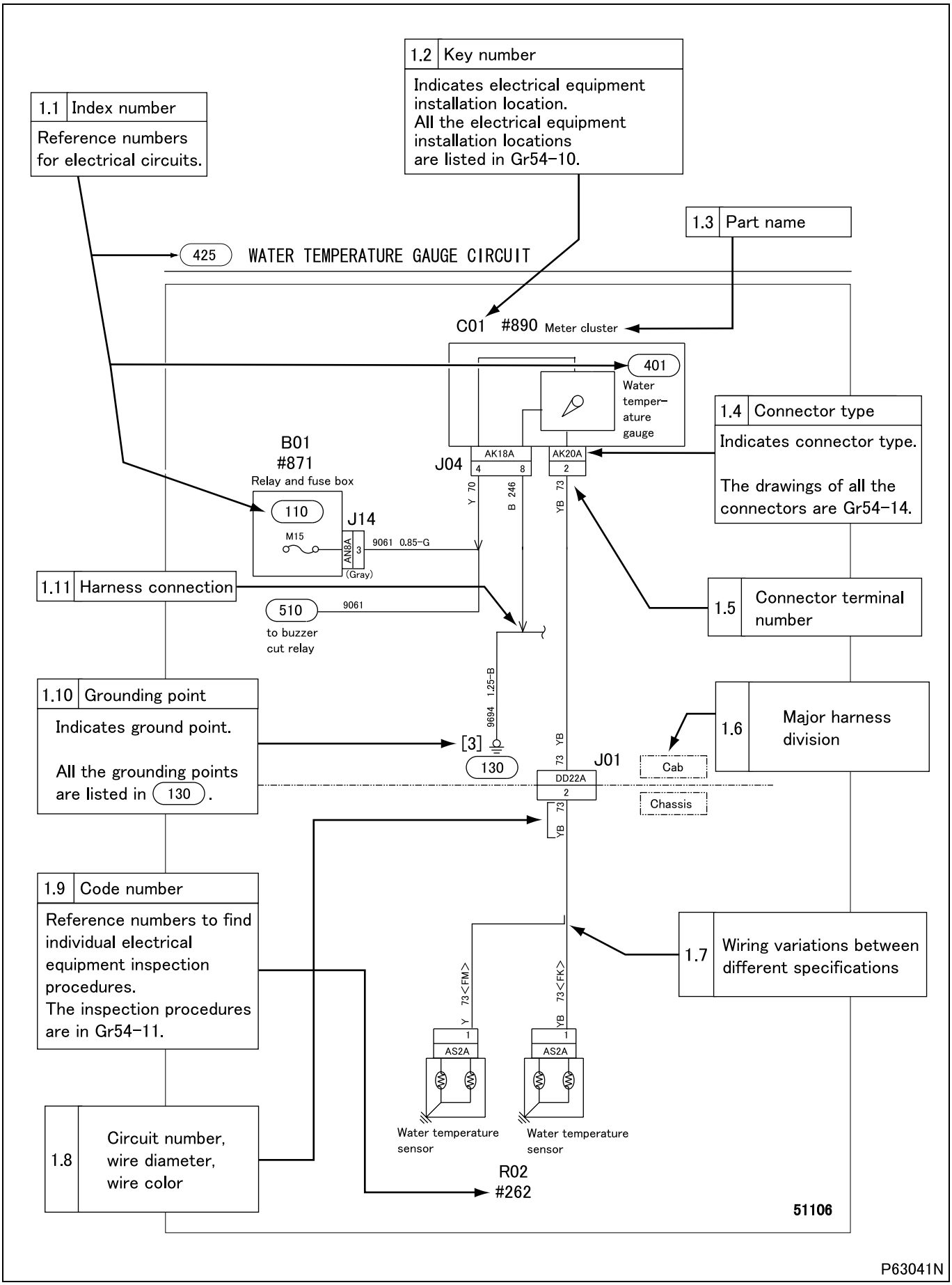

1.1 Index number: (100) to (999)

- Index numbers are used as reference numbers for electrical circuits. Each electrical circuit has been assigned its own index number.

1.2 Key number: A01 to Z99

- Key numbers indicate parts installation locations. The installation location of a part can be easily found using its key number shown in a circuit diagram.
  All of the electrical equipment installation locations are listed in Gr54-10.

1.3 Part name

1.4 Connector type (type indication)

- A list of the connectors used is included in Gr54-14.

1.5 Connector terminal number

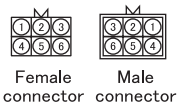

Connector terminal numbering starts with the upper left corner for female connectors and with the upper right corner for male connectors.

P50678E

1.6 Major harness division

- Major harness divisions are shown.

1.7 Wiring variations between different specifications

- Variations in wiring/circuit between different vehicle specifications are clearly indicated as shown.

1.8 Circuit number, wire diameter, wire color

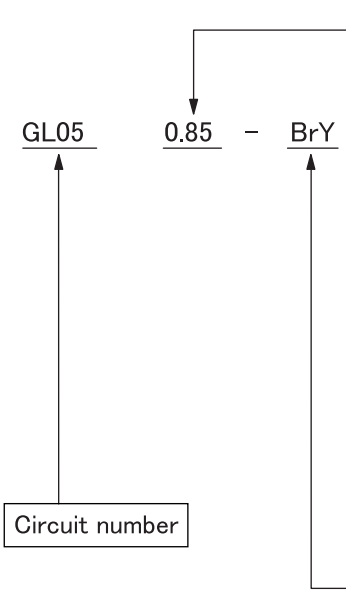

"Wire diameter" represents the cross section of the wire's conductive material. For example, "0.85" corresponds to 0.85 mm^2. On the circuit diagrams, the unit "mm^2" is omitted. Wires with a conductive cross section of 0.5 mm^2 are shown without the wire diameter or unit. As indicated below, shielding wires are marked with "SHIELD," and shielded wires are circled by a dotted line.

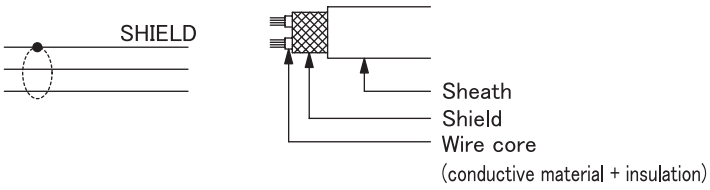

On the circuit drawings, twisted wires are indicated as shown below.

Wire colors are represented by the first letter of the color.
Colors that all start with the letter "B" are indicated as follows.

- BLACK → B
- BLUE → L
- BROWN → Br

Wires that have both base and tracer colors are indicated by two letters.

RY (Yellow tracer on Red base)

GL (Blue tracer on Green base)

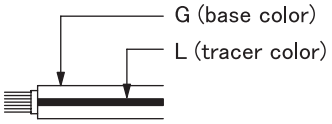

P50680E

1.9 Code number: #001 to #999

- Code numbers are reference numbers to find individual electrical equipment inspection procedures. The inspection procedure for an electrical equipment can be found using its code number shown in a circuit diagram.

HOW TO READ THIS GROUP

1.10 Grounding point: [1] to [99]

- Locations where wires are grounded to the vehicle. All of the grounding points are listed in (130).

1.11 Harness connection

- The arrow in the wiring diagram indicates where harnesses are connected, and NOT the flow of electricity.

Wire color

Wire color		Base color + tracer											
B	Black	BW	Black/ white	BY	Black/ yellow	BR	Black/red	BG	Black/ green	BL	Black/ blue		
Br	Brown	BrW	Brown/ white	BrB	Brown/ black	BrY	Brown/ yellow	BrR	Brown/ red	BrG	Brown/ green		
G	Green	GW	Green/ white	GR	Green/ red	GY	Green/ yellow	GB	Green/ black	GL	Green/ blue	GO	Green/ orange
Gr Gy	Gray	GrL GyL	Gray/ blue	GrR GyR	Gray/ red								
L	Blue	LW	Blue/ white	LR	Blue/red	LY	Blue/ yellow	LB	Blue/ black	LO	Blue/ orange	LG	Blue/ green
Lg	Light green	LgR	Light green/ red	LgY	Light green/ yellow	LgB	Light green/ black	LgW	Light green/ white				
O	Orange	OL	Orange/ blue	OB	Orange/ black	OG	Orange/ green						
P	Pink	PB	Pink/ black	PG	Pink/ green	PL	Pink/ blue	PN	Pink/ white				
Pu	Purple												
R	Red	RW	Red/ white	RB	Red/ black	RY	Red/ yellow	RG	Red/ green	RL	Red/blue	RO	Red/ orange
Sb	Sky blue												
V	Violet	VY	Violet/ yellow	VW	Violet/ white	VR	Violet/red	VG	Violet/ green				
W	White	WR	White/ red	WB	White/ black	WL	White/ blue	WG	White/ green	WO	White/ orange		
Y	Yellow	YR	Yellow/ red	YB	Yellow/ black	YG	Yellow/ green	YL	Yellow/ blue	YW	Yellow/ white	YO	Yellow/ orange
		YP	Yellow/ pink	YV	Yellow/ violet								

54-00A GENERAL

PRECAUTIONS FOR MAINTENANCE OPERATION

- Before performing service operations, inquire into the customer's complaints and ascertain the condition by checking the total distance travelled, the conditions under which the vehicle is operated, and other relevant factors about the vehicle. And note the necessary information. This information will help you to service the vehicle efficiently.
- Check the location of the fault, and identify its cause. Based on your findings, determine whether parts must be removed or disassembled. Then, follow the service procedure given in this manual.

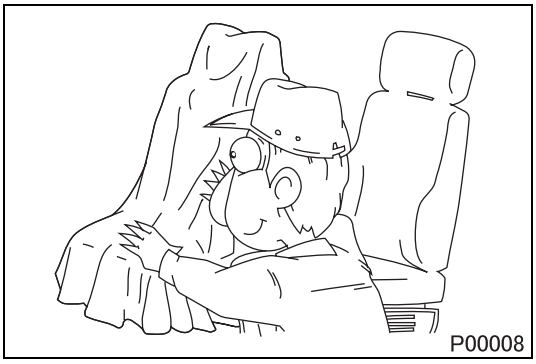
P00008

- Perform service operations on a level surface. Before starting, take the following preparatory steps:
  - To prevent soiling and damage, place covers over the seats, trim and floor in the cab and over the paintwork of the body.

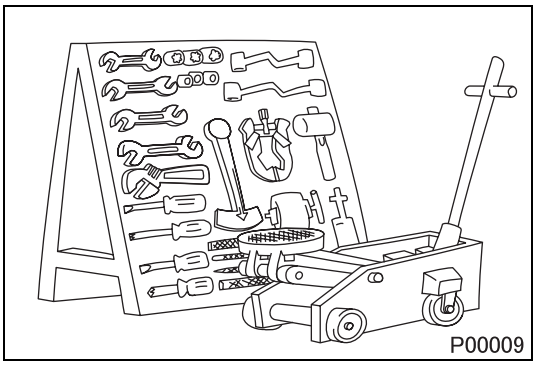
P00009

- Prepare all the general and special tools necessary for the job.

WARNING ⚠

- **Special tools must be used wherever specified in this manual. Do not attempt to use other tools since they could cause injuries and/or vehicle damage.**

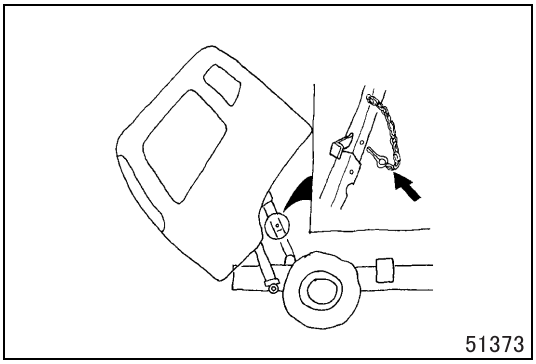
51373

- After tilting the manual tilt type cab, be sure to engage the stopper with the lock lever to lock the cab stay securely.

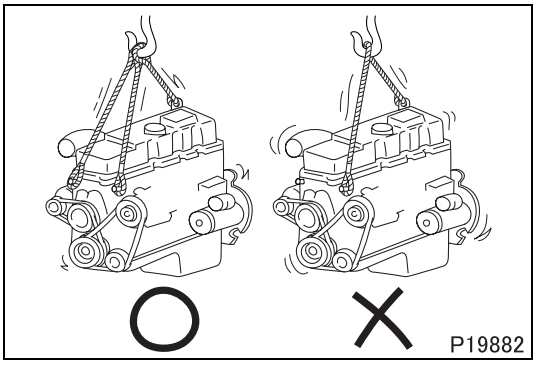
P19882

- Take extreme care when removing/installing heavy items such as engine, transmission and axle. When lifting heavy items using a cable etc., observe the following precautions.
  - Identify the mass of the item being lifted. Use the cable that is strong enough to support the mass.

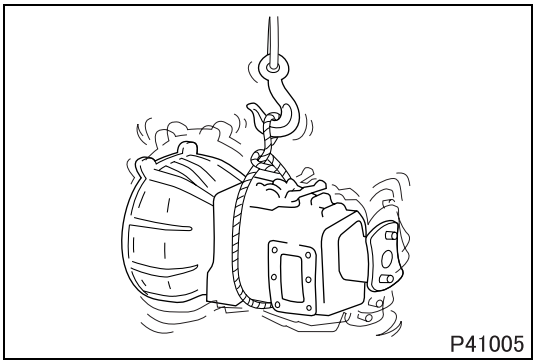

- If lifting eyes are not provided on the item being lifted, tie a cable around the item taking into account the item's center of gravity.

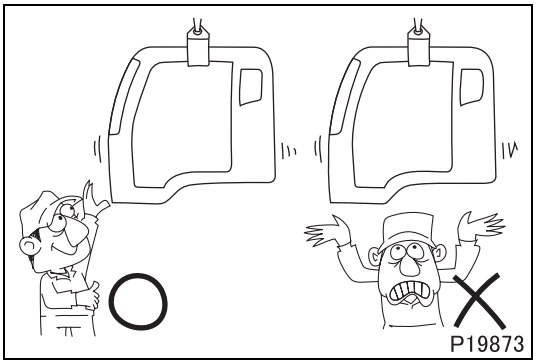

- Do not allow anyone to pass or stay under a lifted item which may possibly fall.

- Never work in shoes that have oily soles.
  When working with a partner or in a group, use pre-arranged signals and pay constant attention to safety. Be careful not to touch switches and levers unintentionally.

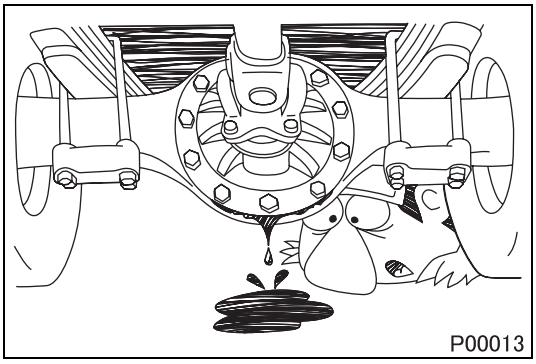

- Inspect for oil leakage etc. before washing the vehicle. If the order is reversed, any oil leakage or fault that may exist could go unnoticed during inspection.

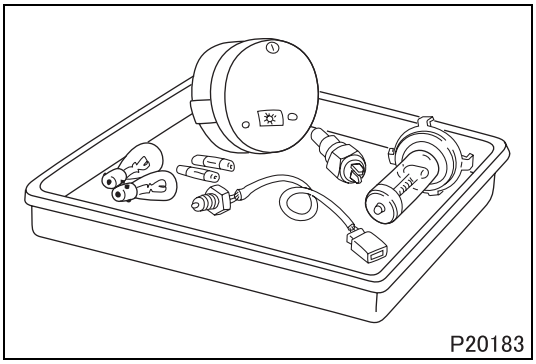
P20183

- Prepare replacement parts ready for installation.

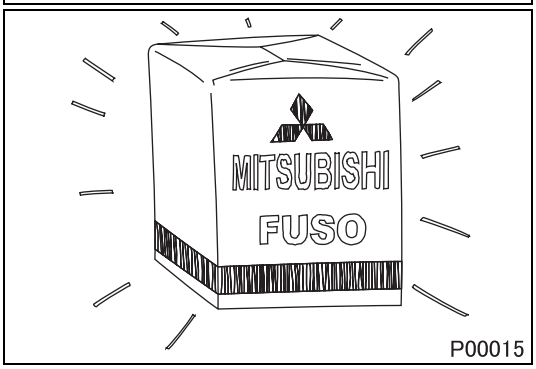

P00015

- Oil seals, packings, O-rings and other rubber parts, gaskets, and split pins must be replaced with new ones after removal. Use only genuine MITSUBISHI replacement parts.

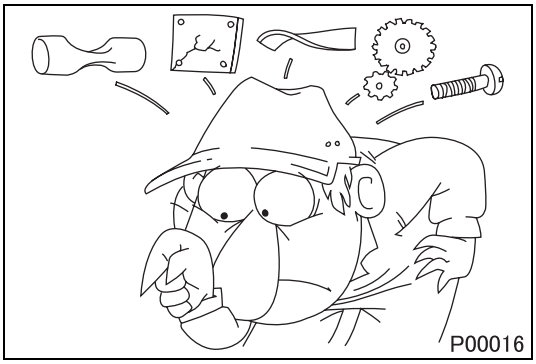
P00016

- When disassembling parts, visually check them for wear, cracks, damage, deformation, deterioration, rust, corrosion, defective rotation, fatigue, clogging and any other possible defect.

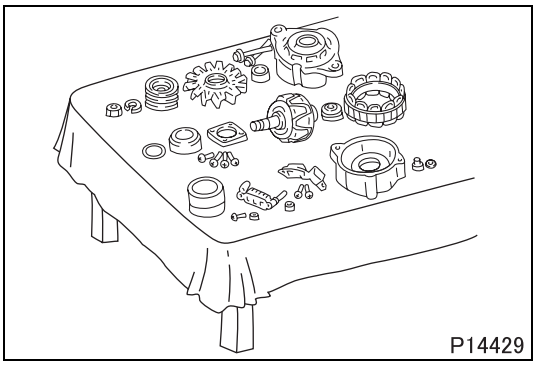
P14429

- To facilitate correct reassembly of parts, make alignment marks on them before disassembly and arrange disassembled parts neatly. Make punch marks and other alignment marks where they will not detract from parts' functionality and appearance.
- After removing parts from the vehicle, cover the area to keep it free of dust.

CAUTION ⚠

- **Be careful not to mix up identical parts, similar parts and parts that have left/right alignments.**
- **Keep new replacement parts and original (removed) parts separately.**

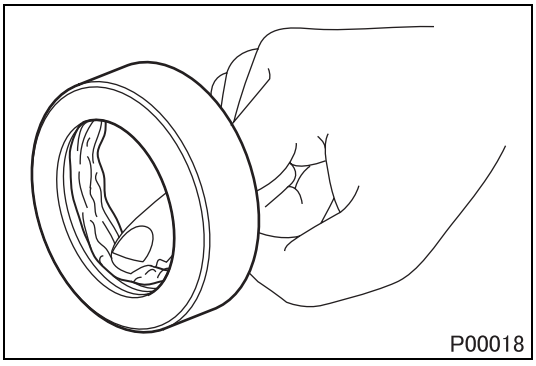
P00018

- Apply the specified oil or grease to U-seals, oil seals, dust seals and bearings before reassembly.
- Always use the specified oils and greases when performing inspection or replacement. Immediately wipe away any excess oil or grease with a rag.

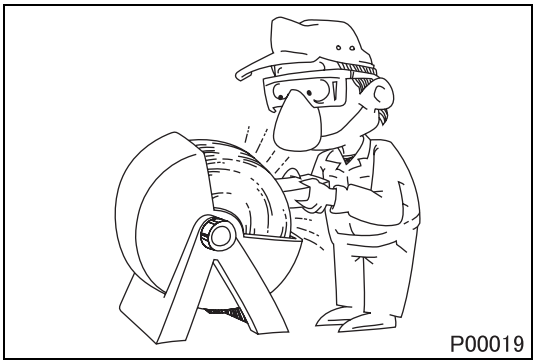
P00019

- Wear safety goggles when using a grinder or welder. Wear gloves when necessary, and watch out for sharp edges and other items that might wound your hands.

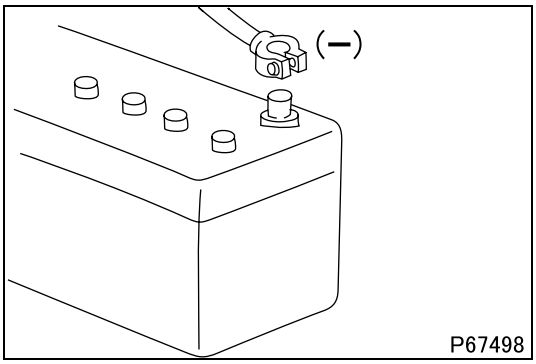

P67498

- Before working on the electrical system, disconnect the (–) battery cable to prevent short circuits.

CAUTION ⚠

- **Make sure the starter switch and lighting switches are OFF before disconnecting or connecting battery cable. Semiconductor components may otherwise be damaged.**

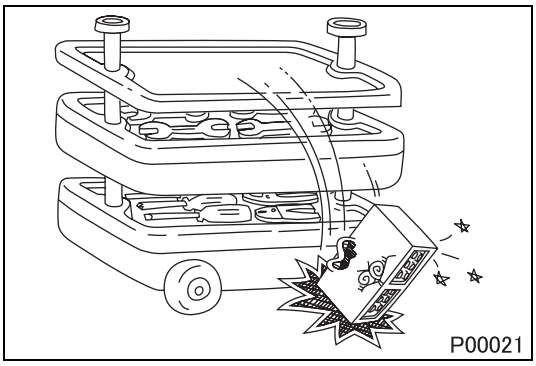
P00021

- Carefully handle sensors relays, and other items that are sensitive to shock and heat. Do not remove or paint the cover of any control unit.

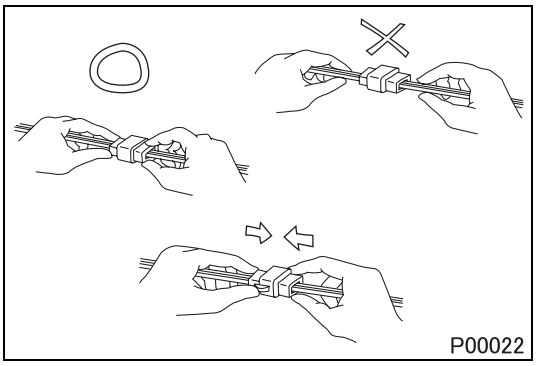
P00022

- When separating connectors, grasp the connectors themselves rather than the harnesses.
- To separate locking connectors, first push them in the direction of the arrows. To reconnect locking connectors, push them together until they click.

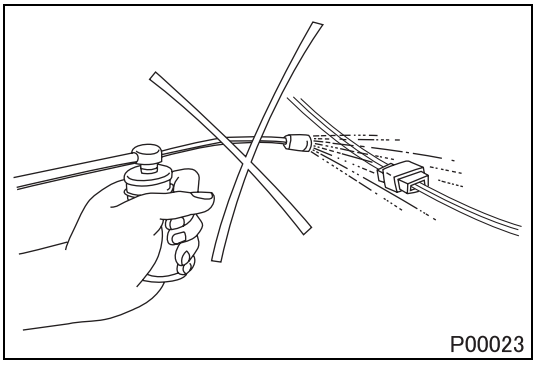
P00023

- Before washing the vehicle, cover electrical parts to keep them dry. (Use plastic sheets or the like.) Keep water away from harness connectors and sensors and immediately wipe off any water that gets on them.

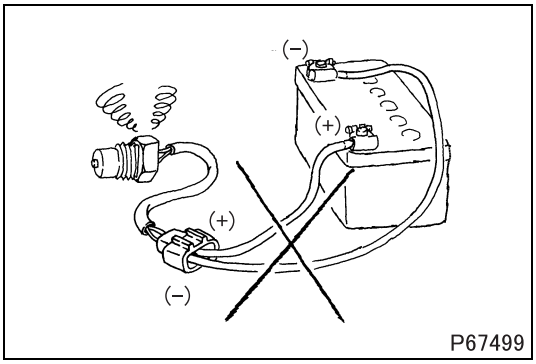

- When applying a voltage to a part for inspection purposes, check that the (+) and (–) cables are connected properly then gradually increase the voltage from zero. Do not exceed the specified voltage.
  Remember that control units and sensors do not necessarily operate on the battery voltage.

1. Handling Precautions for Electric Circuits

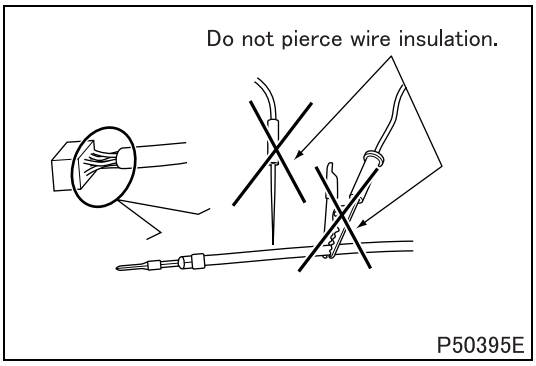

CAUTION ⚠

- **Do not pierce wire insulation with test probes or alligator clips when performing electrical inspections. Doing so can, particularly with the chassis harness, hasten corrosion.**

1.1 Inspection of harnesses

(1) Inspections with connectors fitted together

(1.1) Waterproof connectors

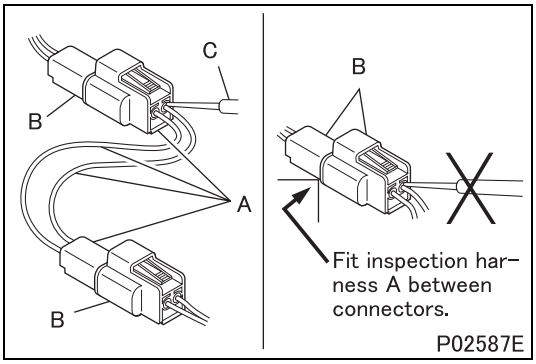

- Connect an inspection harness and connector A between the connectors B of the circuit to be inspected. Perform the inspection by applying a test probe C to the connectors of the inspection harness. Do not insert the test probe C into the wire-entry sides of the waterproof connectors since this would damage their waterproof seals and lead to rust.

(1.2) Non-waterproof connectors

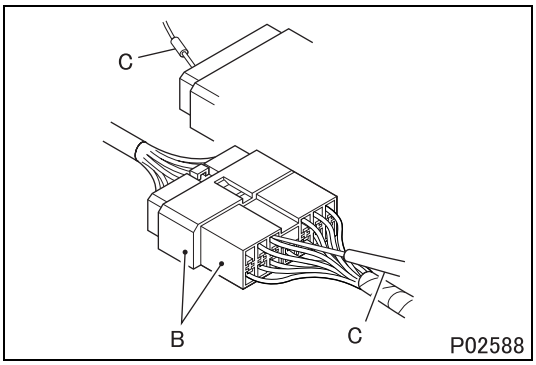

- Perform the inspection by inserting a test probe C into the wire-entry sides of the connectors. An extra-narrow probe is required for control unit connectors, which are smaller than other types of connector. Do not force a regular-size probe into control unit connectors since this would cause damage.

(2) Inspections with connectors separated

(2.1) Inspections on female terminals

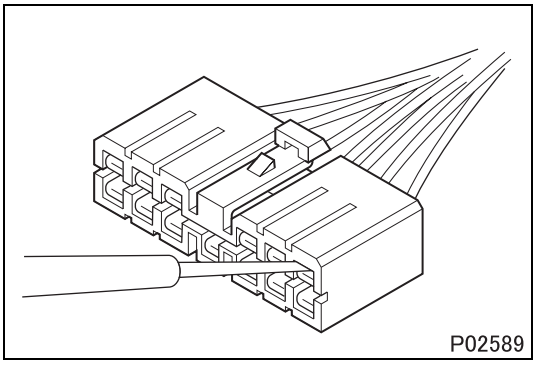

- Perform the inspection by carefully inserting a test probe into the terminals. Do not force the test probe into the terminals since this could deform them and cause poor connections.

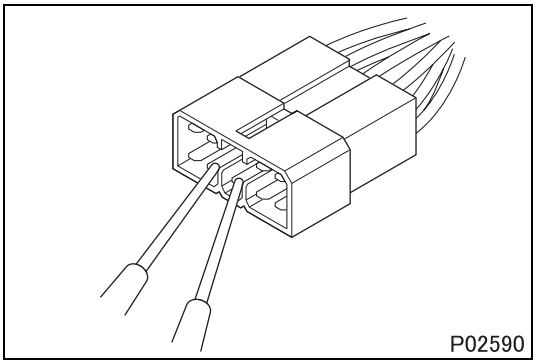
P02590

(2.2) Inspections on male terminals

- Perform the inspection by applying test probes directly to the pins.

CAUTION ⚠

- **Be careful not to short-circuit pins together with the test probes. With control unit connectors, short-circuiting of pins can cause damage to the control unit's internal circuitry.**

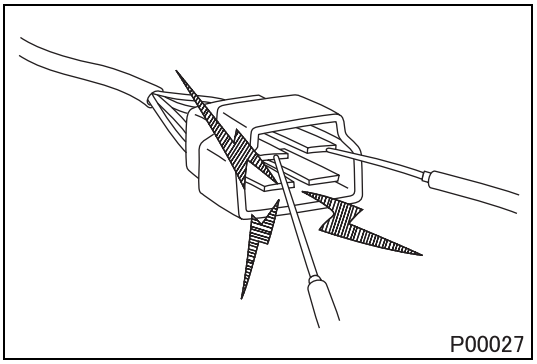
P00027

- When using a multimeter to check continuity, do not allow the test probes to touch the wrong terminals.

1.2 Inspection of connectors

(1) Visual inspection

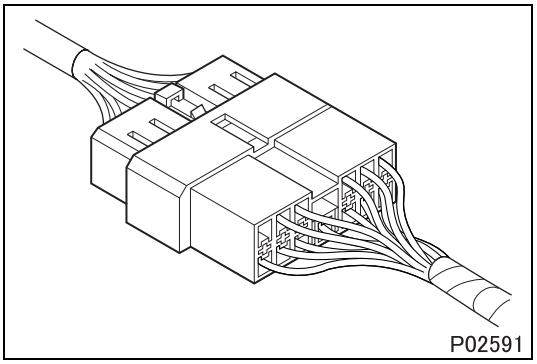
P02591

- Check that the connectors are fitted together securely.

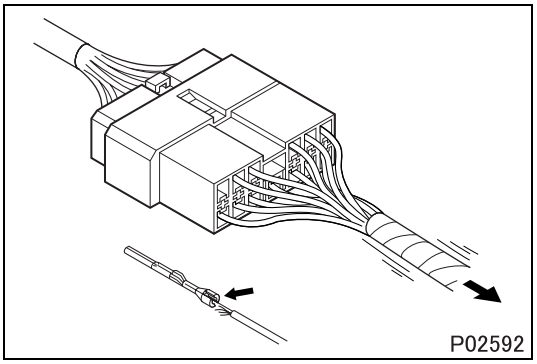
P02592

- Check whether wires have been separated from their terminals due to pulling of the harness.

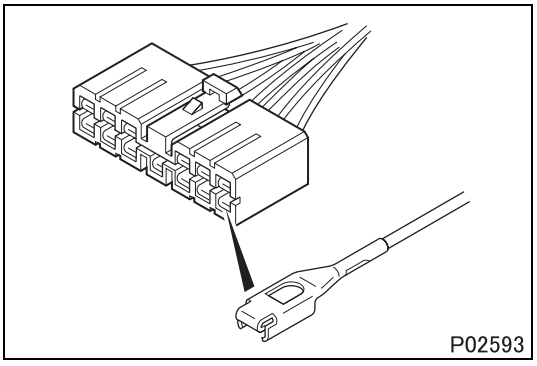
P02593

- Check that male and female terminals fit together tightly.

- Check for defective connections caused by loose terminals, by rust on terminals, or by contamination of terminals by foreign substances.

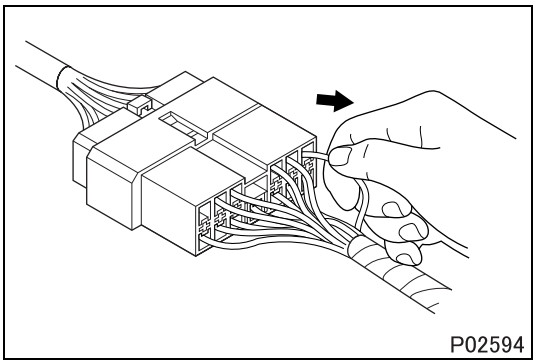
P02594

(2) Checking for loose terminals

- If connector terminal retainers become damaged, male and female terminals may not mate with each other when the connector bodies are fitted together. To check for such terminals, gently pull each wire and see whether any terminals slip out of their connector housings.

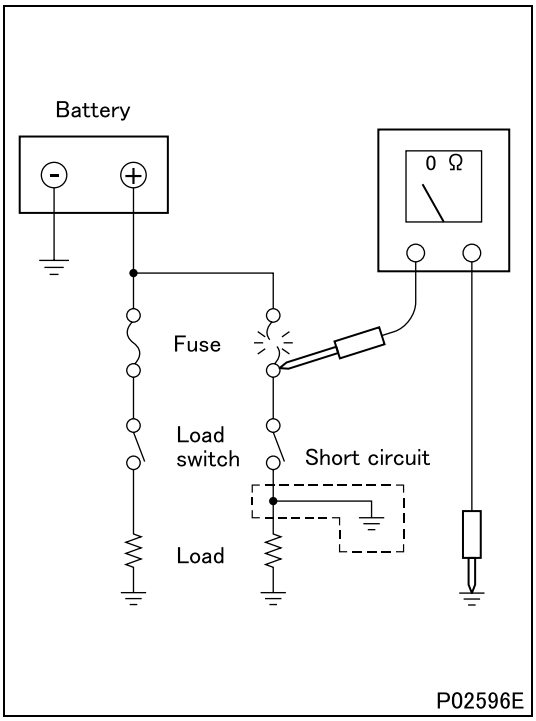

P02596E

1.3 Inspections when a fuse blows

- Remove the fuse, then measure the resistance between ground and the fuse's load side.
  Next, close the switch of each circuit connected to the fuse. If the resistance measurement between any switch and ground is zero, there is a short circuit between the switch and the load. If the resistance measurement is not zero, the circuit is not currently short-circuited; the fuse probably blew due to a momentary short circuit.

- The main causes of short circuits are as follows:
  - Harnesses trapped between chassis parts
  - Harness insulation damage due to friction or heat
  - Moisture in connectors or circuitry
  - Human error (accidental short-circuiting of components)

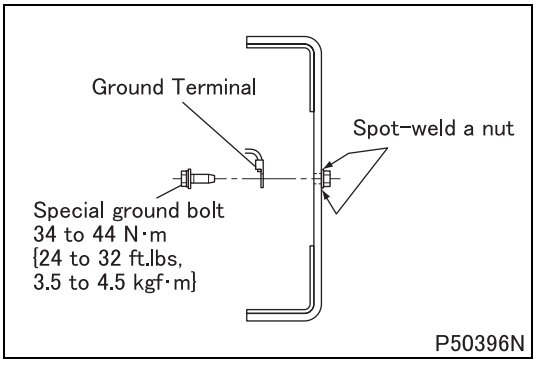

P50396N

1.4 Inspection of chassis ground

- A special ground bolt is used to tighten a ground terminal. When servicing the ground point, be sure to follow the procedures described below:
  - When reinstalling the ground bolt
    Tighten the ground bolt to the specified torque.
  - When relocating the ground point
    A special ground bolt must be used. Spot-weld a nut to a frame and tighten the ground bolt to the specified torque. Be sure to apply touch-up paint to the welded point.

2. Service Precautions for Alternators

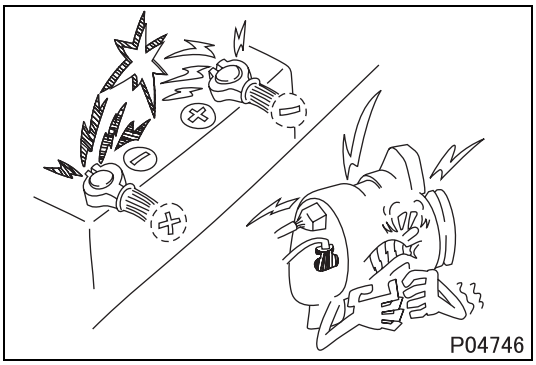

- When servicing alternators, observe the following precautions:
  - Never reverse the polarity of battery connections.
    If the polarity of the battery connections were to be reversed, a large current would flow from the battery to the alternator, damaging the diodes and regulator.

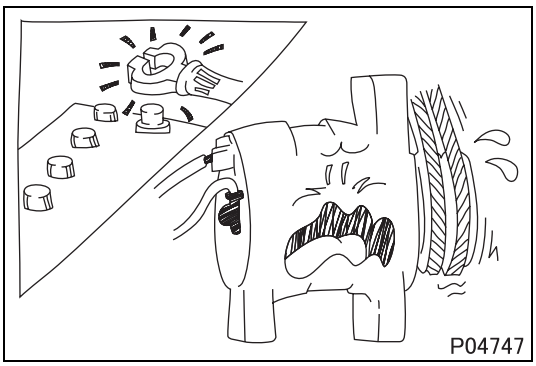

- Never disconnect the battery cables with the engine running.
  Disconnection of the battery cables during engine operation would cause a surge voltage, leading to deterioration of the diodes and regulator.

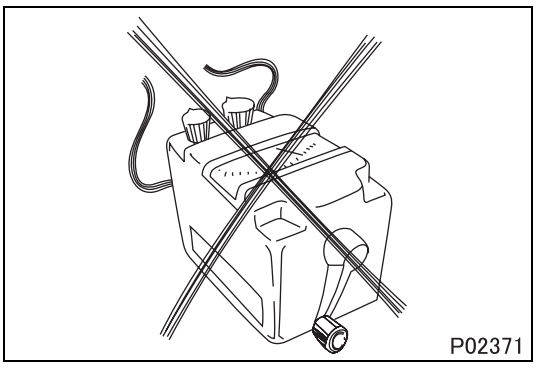

- Never perform inspections using a high-voltage multimeter.
  The use of a high-voltage multimeter could damage the diodes and regulator.

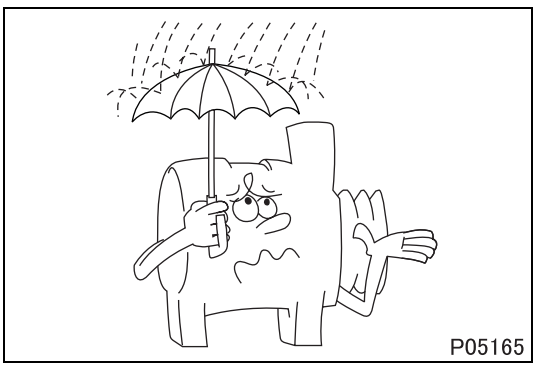

- Keep alternators dry.
  Water on alternators can cause internal short circuits and damage.

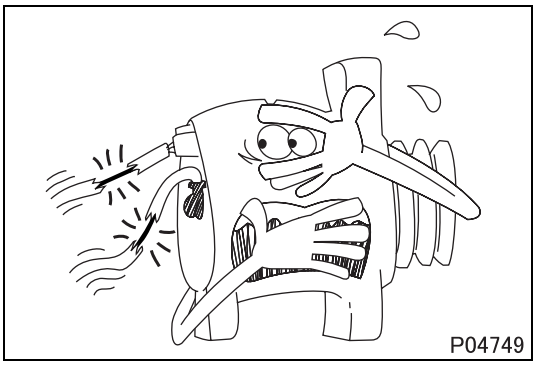

- Never operate an alternator with the B and L terminals short-circuited. Operation with the B and L terminals connected together would damage the diode trio.

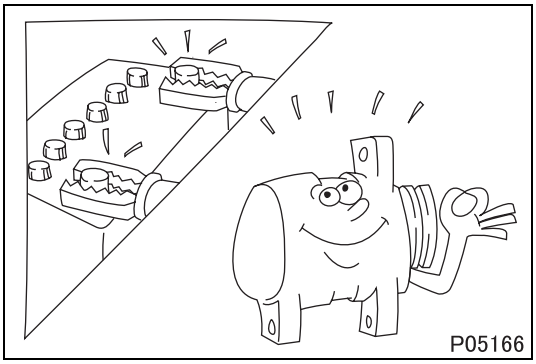

- Disconnect the battery cables (+) and (–) before quick-charging the battery with a quick charger.
  Unless the battery cables are disconnected, quick-charging can damage the diodes and regulator.

3. Intermittent Faults

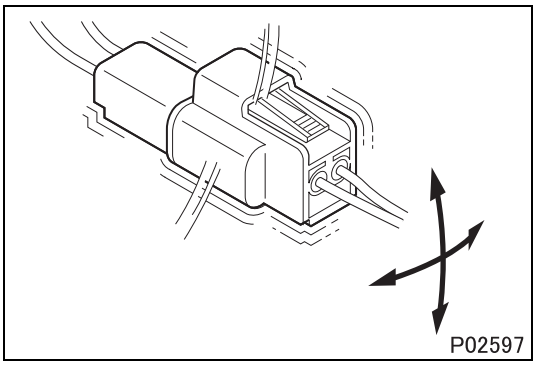

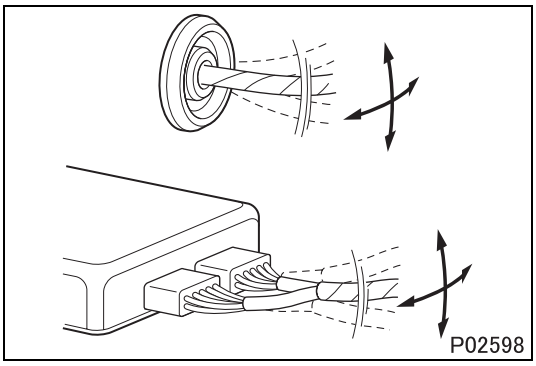

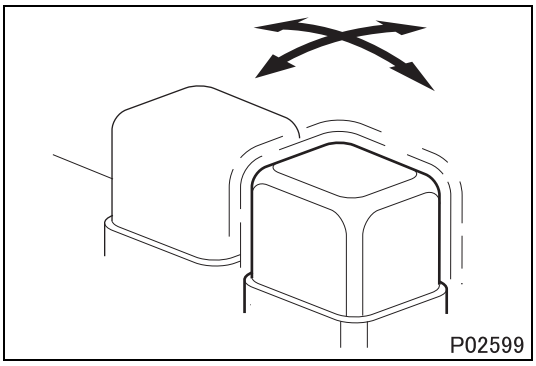

- An intermittent fault typically occurs only under certain operating conditions. Once these conditions have been identified, the cause of the intermittent fault can be ascertained easily. First, ask the customer about the vehicle operating conditions and weather conditions under which the fault occurs. Also ask about the frequency with which the fault occurs and about the fault symptoms. Then, reproduce the fault based on this information.
  In accordance with the conditions under which the fault occurs, determine whether the fault is caused by vibration, heat or other factors. If vibration is a possible factor, see if the fault can be reproduced by performing the following checks on individual connectors and other parts:
  - Gently move connectors up and down and to left and right.
  - Gently move wiring harnesses up and down and to left and right.
  - Gently wiggle sensors and other devices by hand.
  - Gently wiggle wiring harnesses on suspension systems and other moving parts.

- Connectors and other parts to be checked are those included or given as likely fault locations in inspection procedures corresponding to diagnosis codes and/or fault symptoms.

4. Precautions for Arc Welding

- When arc welding is performed, current from the welder flows to ground via the vehicle's metal parts. Unless appropriate steps are taken, this current can damage control units, other electrical devices and wiring harnesses. And any electrical device near the point on the vehicle to which the (–) cable of the welder is connected, might be largely damaged.

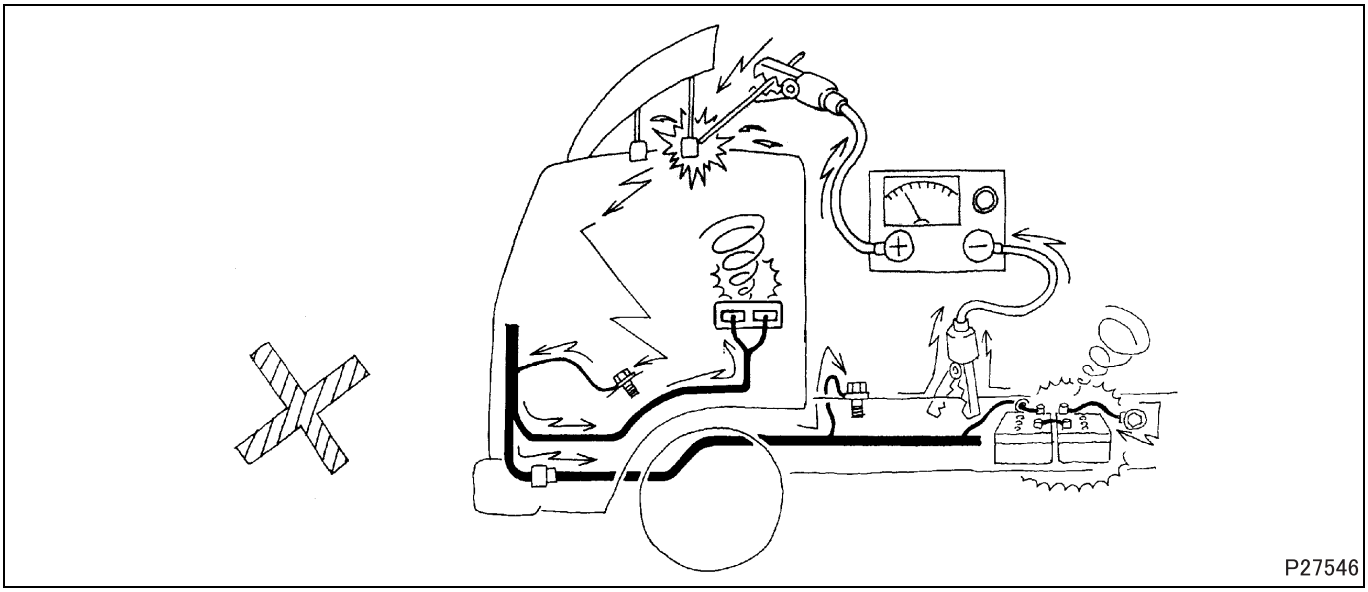

- Current flows backward as shown below.

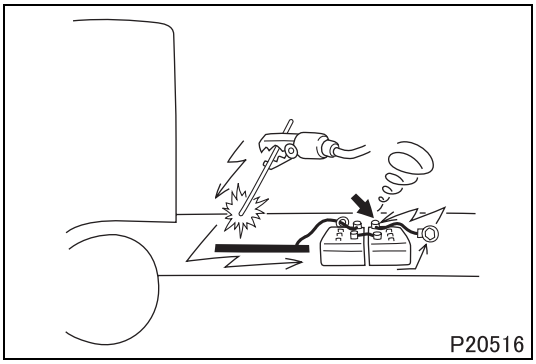

4.1 From battery (–) cable

To prevent damage to the battery and to electrical devices that are connected directly to the battery, it is essential to disconnect the battery's (–) cable.

4.2 Procedure

- Turn the starter switch to the LOCK position.
- Disconnect the battery's (–) cable.
- Cover all parts of the vehicle that may be damaged by welding sparks.
- Connect the welder's (–) cable to the vehicle as close as possible to the area being welded. Do not connect the welder's (–) cable to the cab if the frame is being welded, and vice versa.
- Set the welding current in accordance with the part being welded.

54-00B SPECIFICATIONS

SPECIFICATIONS

Battery

Item		Specifications
Model		115E41R
Voltage × quantity	V	12 × 2 (parallel connection)
Capacity (5-hour rating)	Ah	88

Alternator

Item		Specifications
Manufacturer		DENSO CORPORATION
Type		Alternator with built-in regulator
		Brushless type
		External fan
Model		101210-9550
Output	V-A	12–100

Engine starter, Glow

Item			Specifications
Starter	Manufacturer		MITSUBISHI ELECTRIC
	Reduction gear mechanism		Planetary gears
	Model		M009T50371
	Output	V-kW	12–5
	Magnetic switch operating voltage	V	8 or less
Starter relay	Model		U001X11972
	Excitation current	V-A	12–4
	Closing voltage	V	8 or less
	Opening voltage	V	3.5 or less
	Allowable cutoff current	A	200
Glow plug	Model		Seathed type
	Rated voltage current	V-A	11–3.8
Glow relay	Model		U001T11872
	Excitation current	V-A	12–4
	Closing voltage	V	8 or less
	Opening voltage	V	3.5 or less
	Allowable cutoff current	A	60
	Temperature fuse capacity	A	127

Lighting

Item			Specifications
Headlamp	Model		Rectangular, 2-lamp system, semi-sealed beam
	Type		Reflector type
	Upper beam (HIGH)	W	halogen 60
	Lower beam (LOW)	W	halogen 55
	Parking lamp	W	5
	Front turn	W	21
Front side turn signal lamp (serving also as hazard warning lamp)		W	10
Side turn signal lamp (serving also as hazard warning lamp)		W	10
Clearance and side marker lamp		W	7.5
Rear combination lamp	Stop/tail lamp	W	21/5
	Backup lamp	W	21
	Turn signal lamp (serving also as hazard warning lamp)	W	21
Personal lamp		W	10
Identification lamp		W	7.5
License plate lamp		W	7.5

All bulbs of the lamps shown above voltage rating of 12 V.

Meter

Item			Specifications
Meter cluster	Manufacturer		YAZAKI
	Voltage	V	12
	Speedometer indicating range	MPH {km/h}	0 to 90 ($^{+2.5}_{0}$ at 40) {0 to 140 ($^{+3.5}_{0}$ at 60)}
	Tachometer indicating range	rpm	0 to 3500 (± 75 at 3000)
	Water temperature gauge indicating range		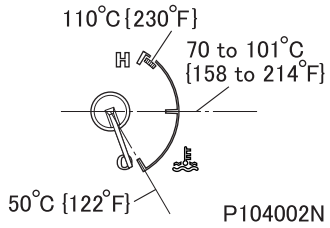 P104002N
	Meter warning buzzer — Rated current	mA	50 or less
	Meter warning buzzer — Sound pressure	dB	65 $^{+6}_{0}$ (at 1 m {3.3 ft.})

SPECIFICATIONS

Relay, Motor, Horn, Buzzer

Item			Specifications
Relay	Rated voltage	V	12
	Minimum operating voltage	V	8 or less
Speaker	Rated input	W	15
	Maximum input	W	25
	Impedance	Ω	4 ± 0.6
Power window motor	Rated voltage	V	13.5
	Rated current	A	9 or less <Up>, 7 or less <Down>
Door lock actuator	Rated voltage	V	12
	Bound current	A	5 or less
Air horn	Rated voltage	V	12
	Current consumption	A	3.2 or less
	Sound pressure	dB	104 (at 2 m {6.6 ft.})
Wiper motor	Rated voltage	V	12
	Non-load current	A	6 or less
	Bound current	A	40 or less
Windshield washer motor	Rated voltage	V	12
	Rated current	A	3.8 or less
Back buzzer (outside)	Rated voltage	V	12
	Rated current	mA	50 or less
	Sound pressure	dB	85 ± 10 (at 1 m {3.3 ft.})
	Intermittent frequency frequency per minute		85 ± 15
Low air pressure buzzer	Rated voltage	V	12
	Rated current	mA	100 or less
	Sound pressure	dB	$75\ ^{+15}_{0}$ (at 1 m {3.3 ft.})

54-00C STRUCTURE AND OPERATION

1. Starter

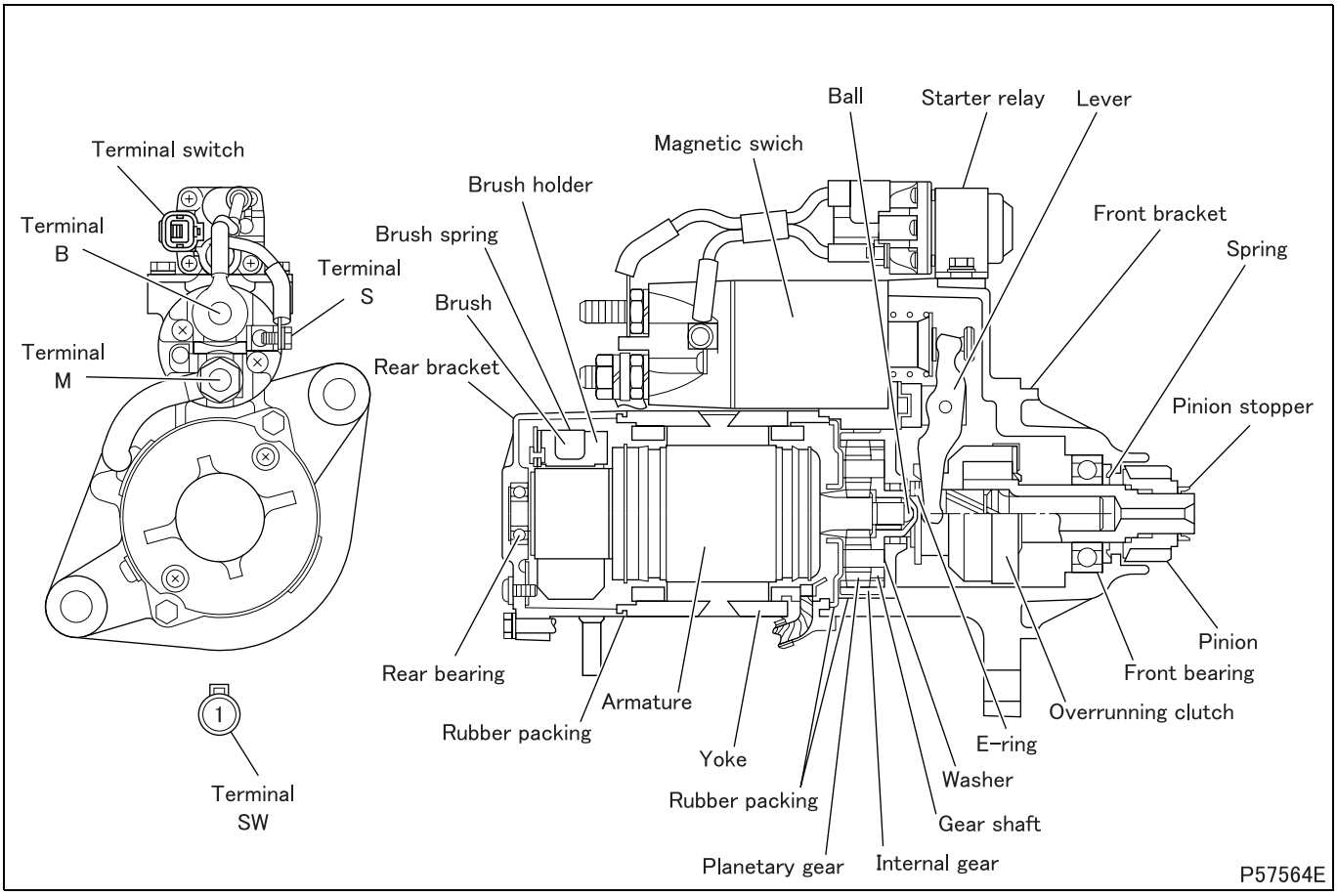

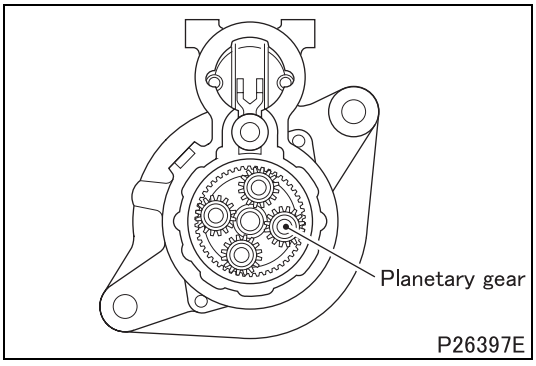

- This starter uses planetary gears as its reduction gearing mechanism.

2. Alternator

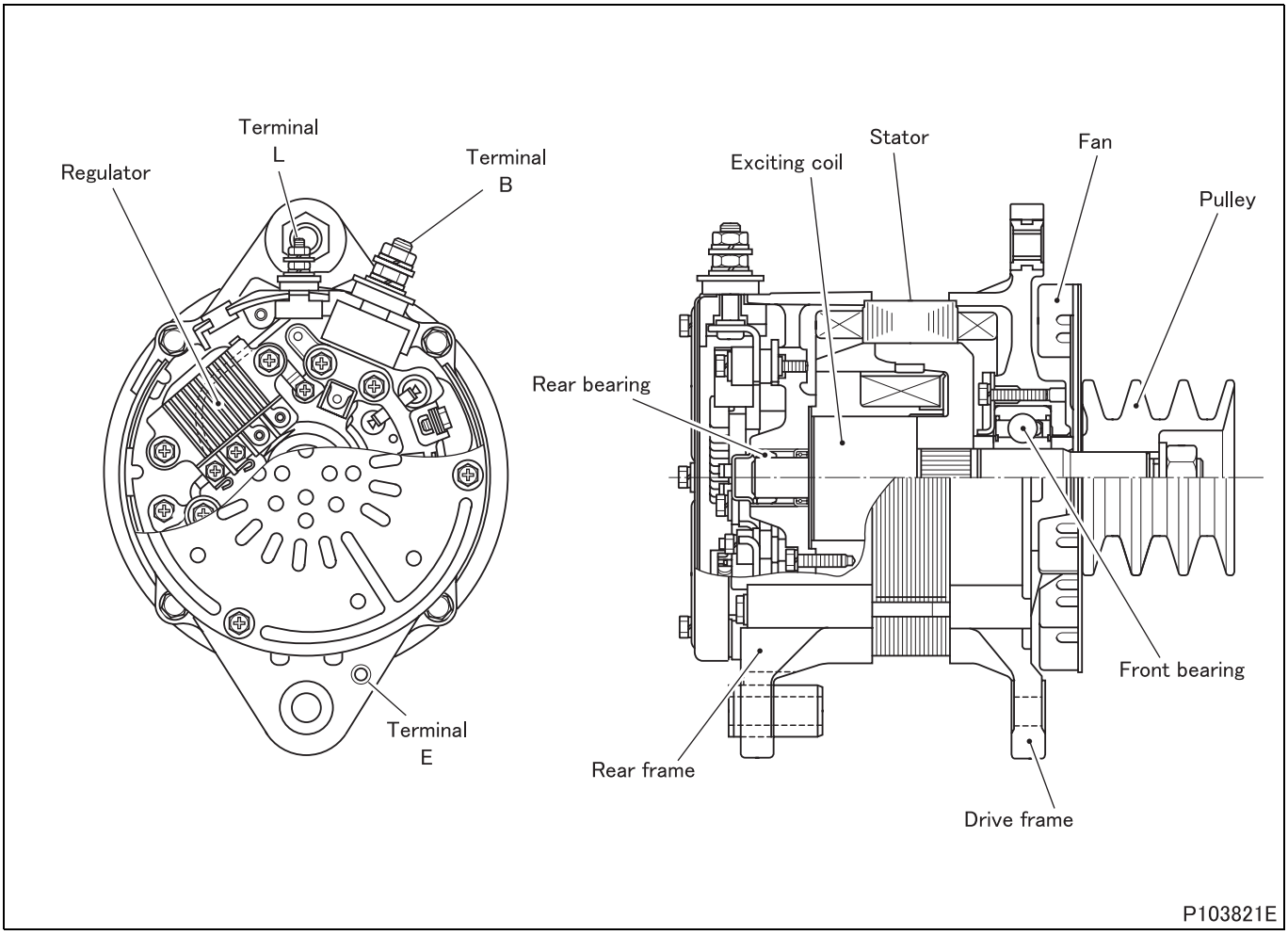

2.1 Alternator with neutral diodes

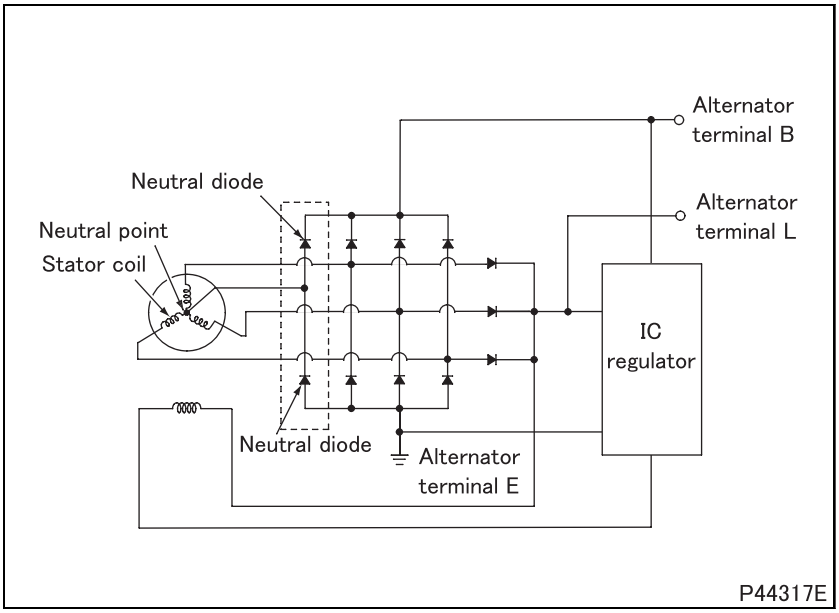

(1) Features

- The alternator is the same as the current alternator except that neutral diodes have been added.
- These neutral diodes enable this alternator to provide higher DC output during operation at high speeds than the alternator without neutral diodes.

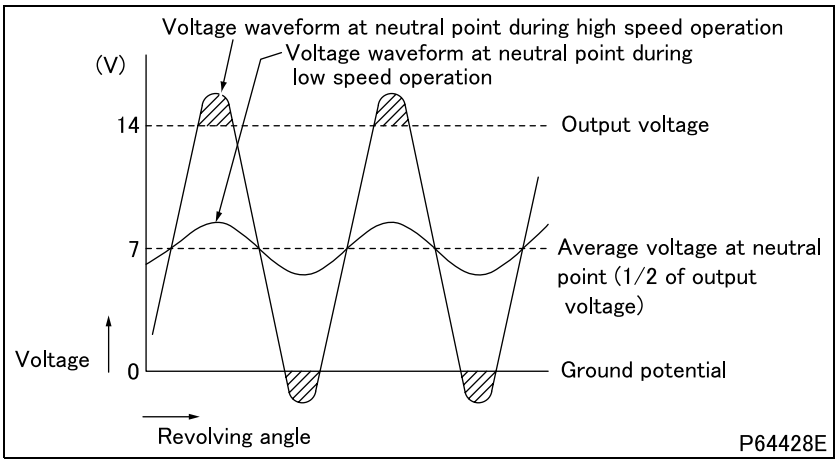

(2) Variations of voltage at neutral point and operation of neutral diodes

- The potential at the neutral point varies up and down with the neutral point DC voltage (1/2 of output voltage) as a center as shown.
- When the alternator is operated at high speeds, the voltage at the neutral point can increase to exceed the output voltage (14 V) and decrease to become lower than the ground voltage (0 V). To adjust these over-voltage and under-voltage (shaded portions of diagram) the current from the excess voltages is taken by neutral diodes and added to the DC output.

The operation of neutral diodes for each voltage and potential is as follows.

- When the voltage at neutral point is in the range from 0 to 14 V, the other six diodes are operated. Neutral diodes are not operated.

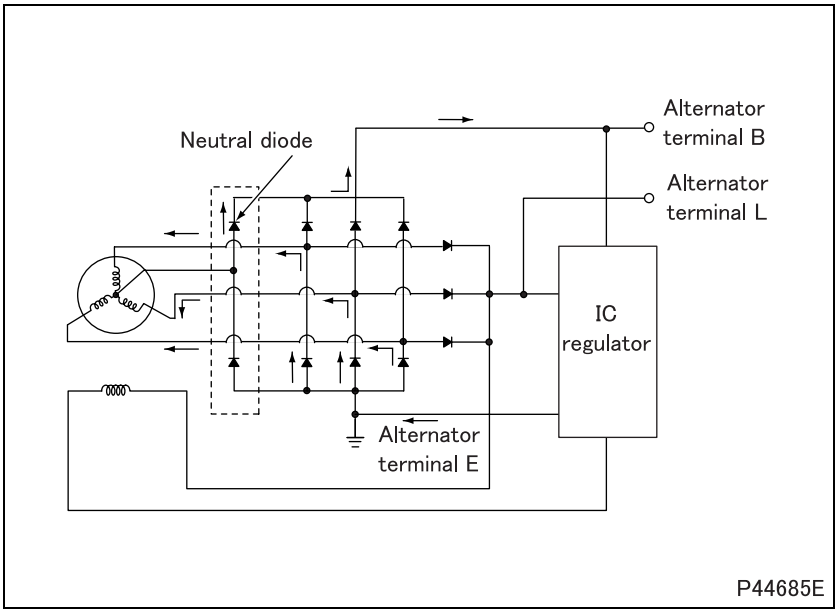

(3) When the voltage at neutral point exceeds 14 V

- The positive neutral diode adds extra output to the DC output for supply to each electric equipment.

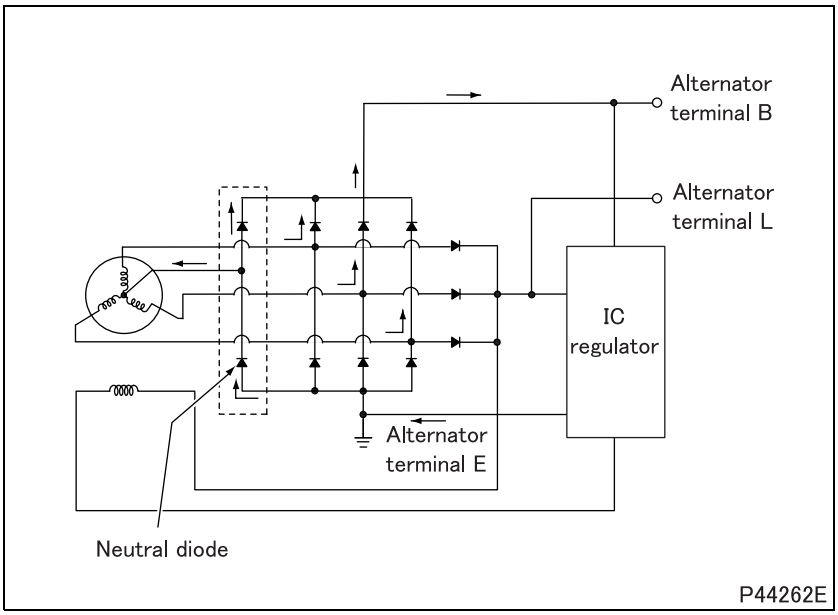

(4) When the voltage at neutral point drops below 0 V

- The negative neutral diode supplies the output from neutral point through other three diodes.

3. Headlamp

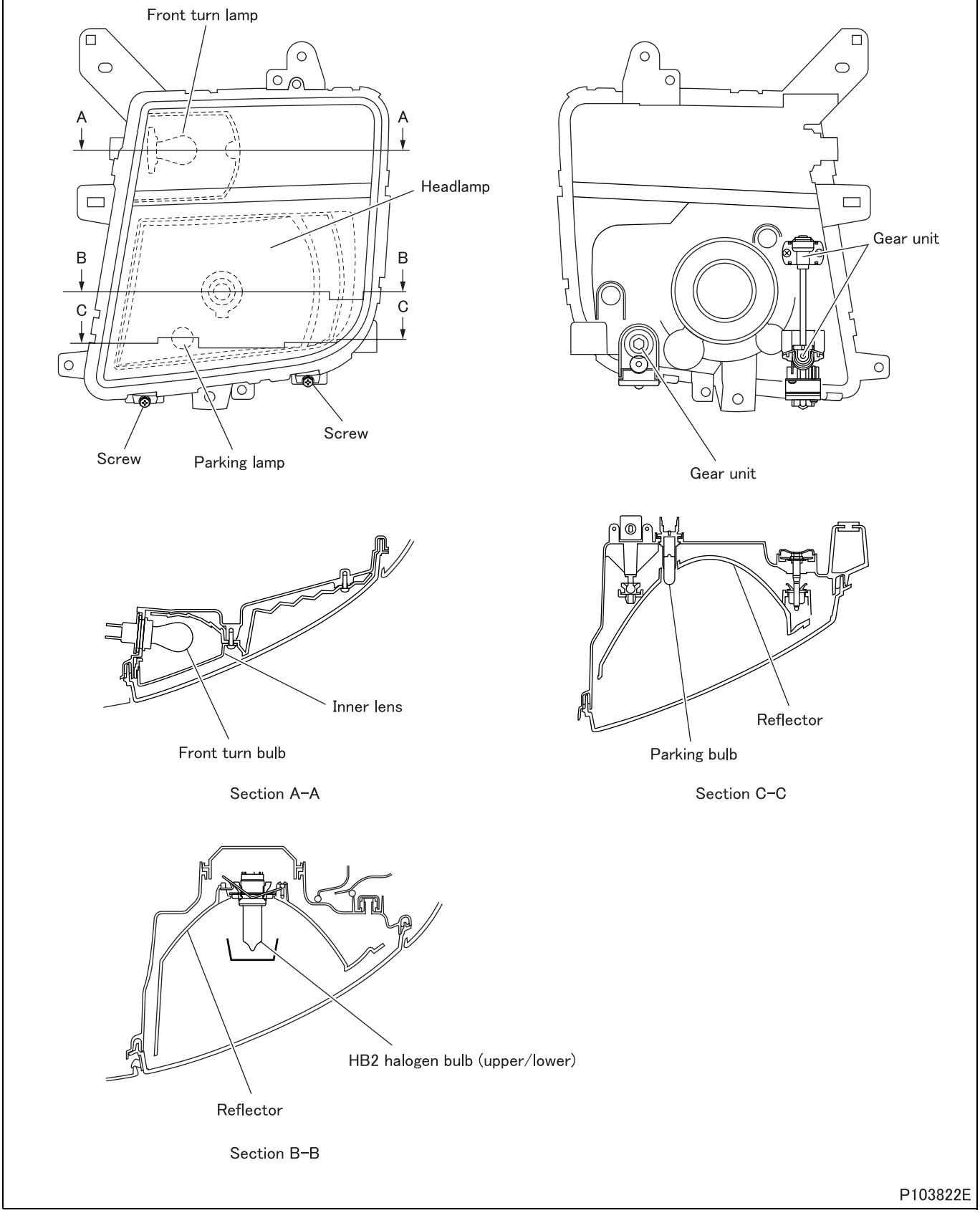

(The drawings show the parts for the left-hand side headlamp.)

4. Meter Cluster

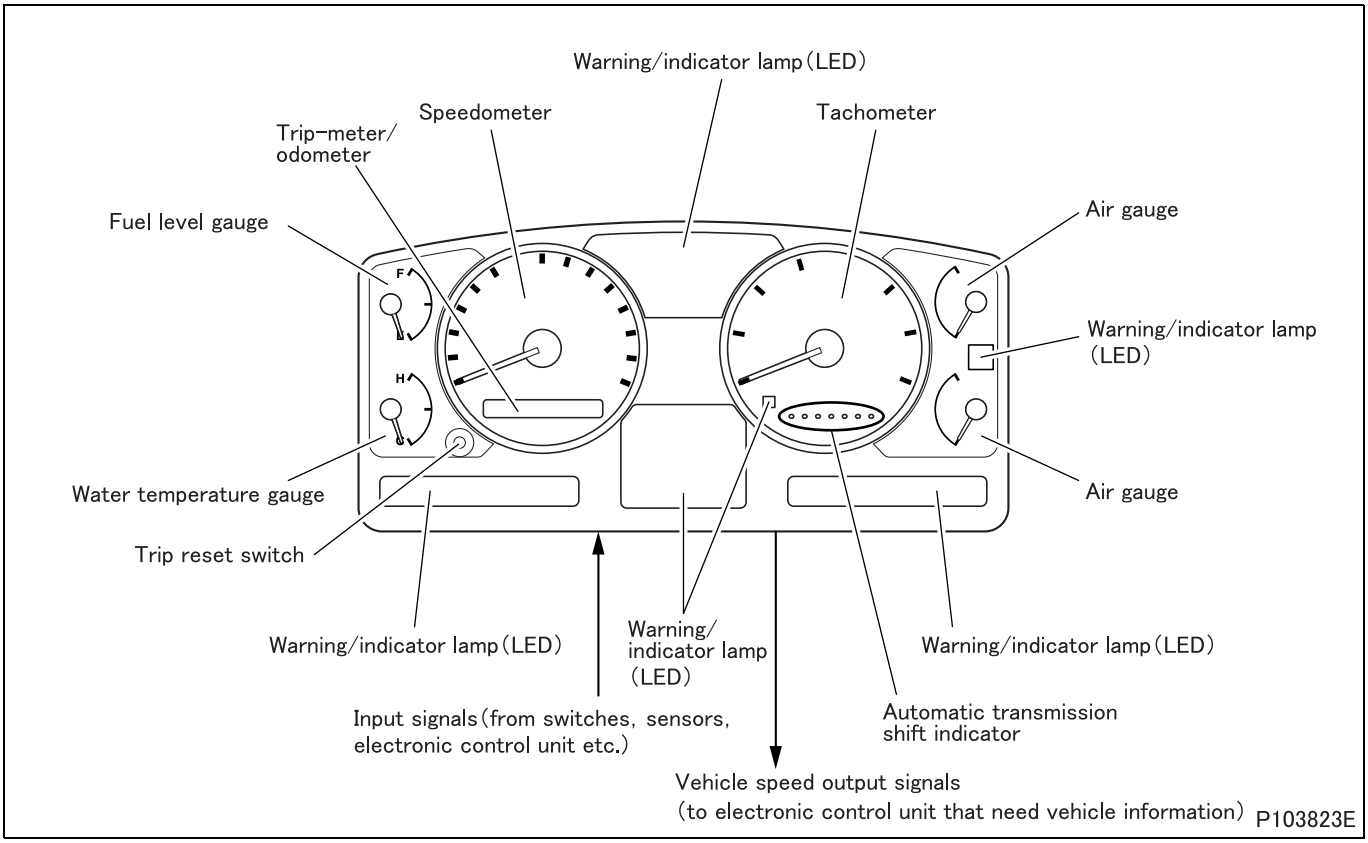

- The meter cluster incorporates a CPU, which contains the following functions.
  - The instrument drive function.
  - The lighting and alarm control (LAC) function.
  - The indicator and warning lamp indication warning function.
  - The buzzer sounding function.
- The meter cluster incorporates a pulse divider, which outputs signals from the speed sensor to each electronic control unit.

4.1 Electronic control unit in the meter cluster system block diagram

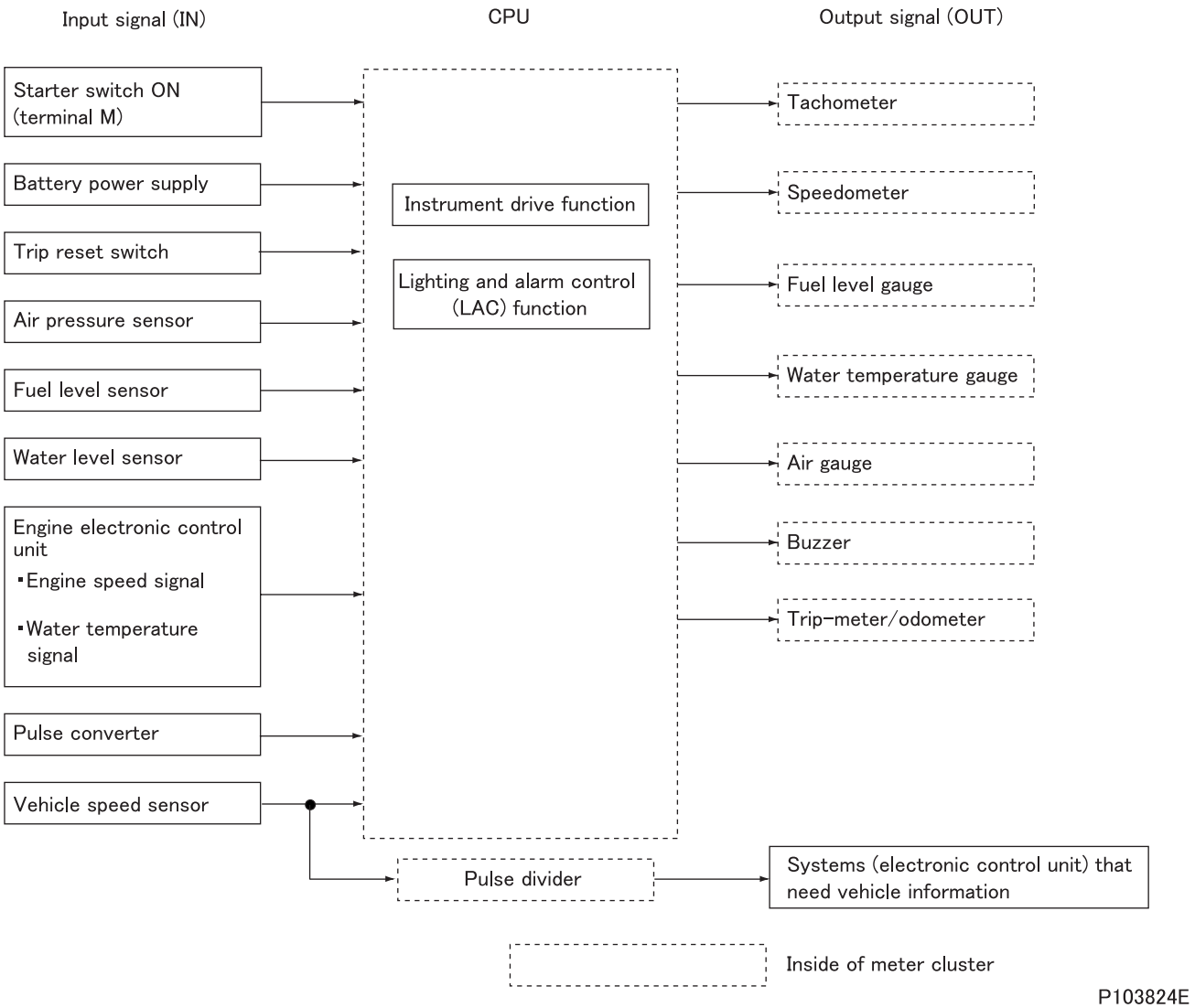

4.2 Instrument drive function

(1) Tachometer

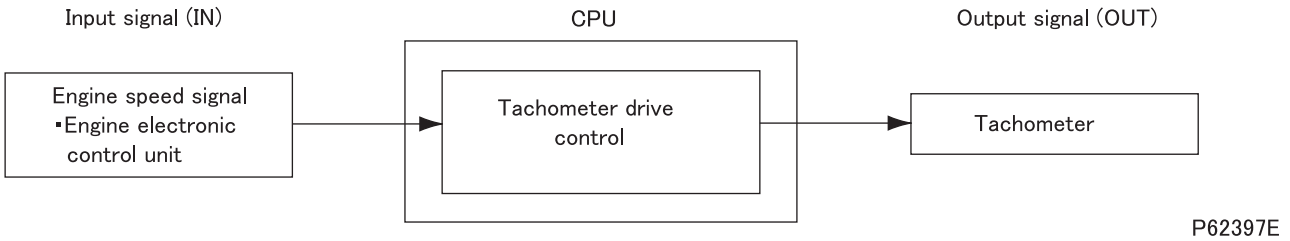

(2) Speedometer

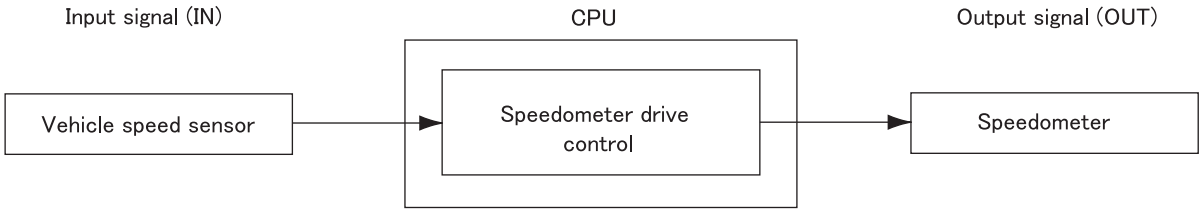

P57491E

(3) Fuel level gauge

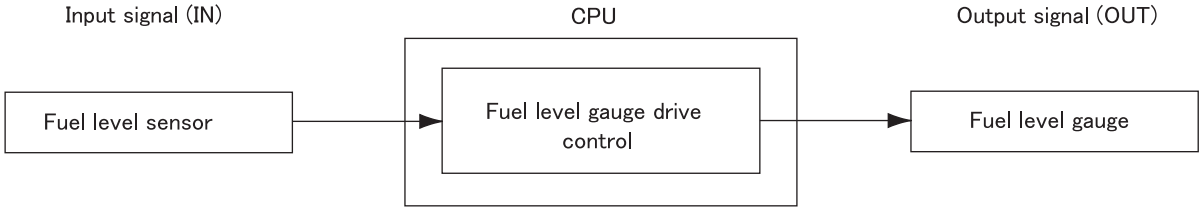

P57492E

(4) Water temperature gauge

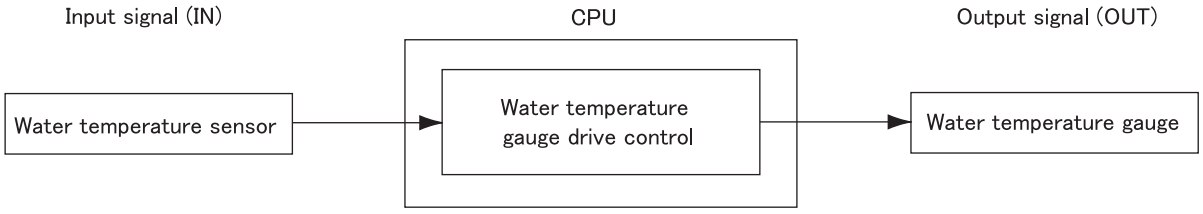

P57493E

(5) Air gauge

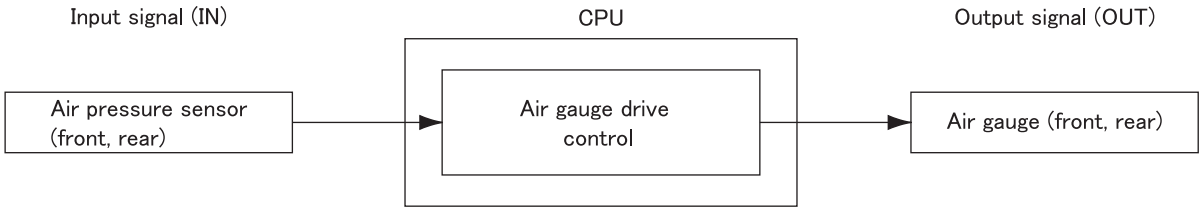

P105411E

(6) Trip-meter/odometer

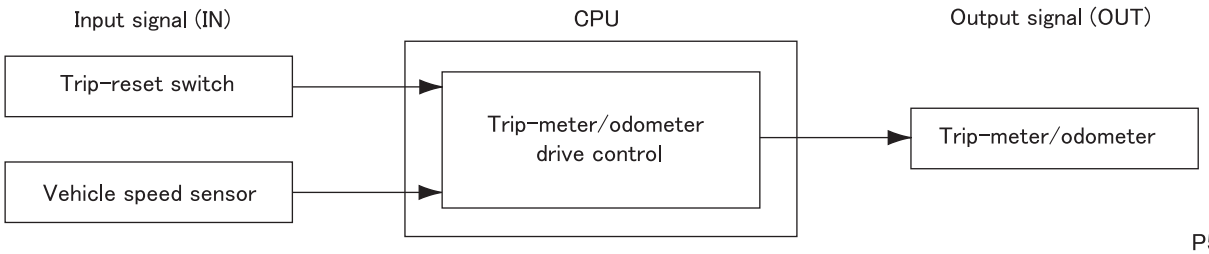

P57489E

4.3 Lighting and alarm control (LAC) function

(1) Internal structure of LAC

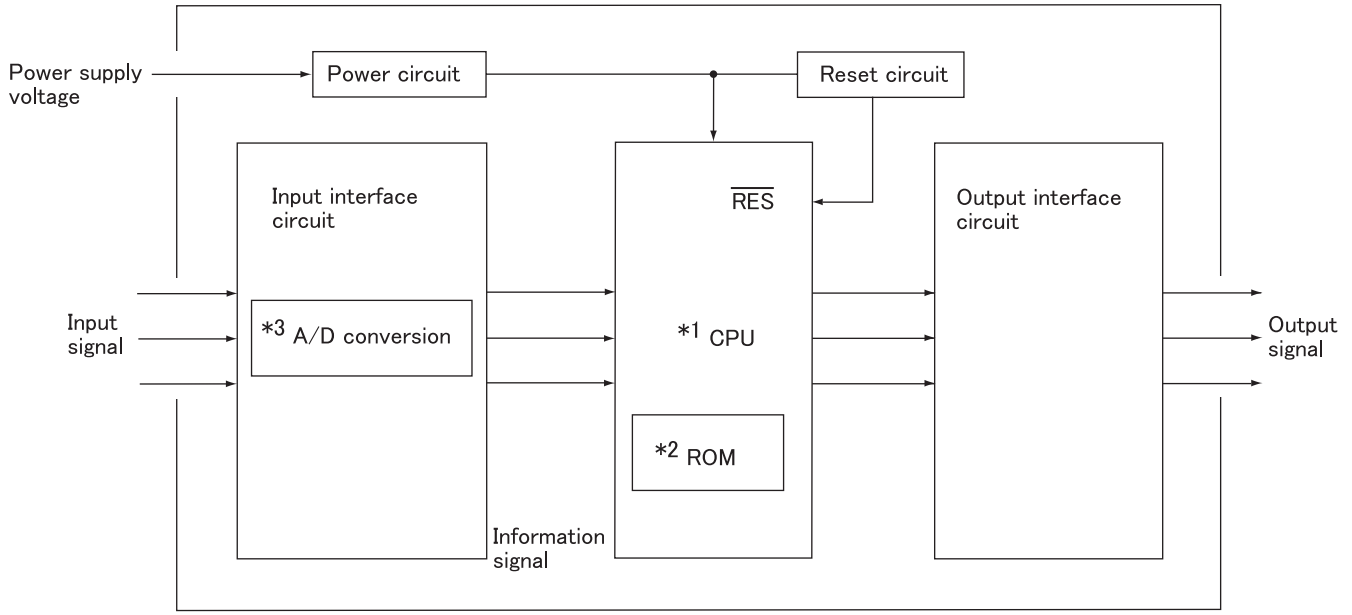

P57494E

- Internally, the LAC is essentially made up of the input interface circuit, *1CPU, *2ROM, and output interface circuit.
  - *1CPU:
    An abbreviation for Central Processing Unit. It compares the input information and the information stored in the ROM, makes a decision and sends commands to the outputs.
  - *2ROM:
    An abbreviation for Read-Only Memory. Its contents are only for reading. It stores fixed data and programs, and such retained information is not deleted even after power is cut off.
- Information sources such as the sensor and switch send input signals to the input interface circuit.
- The input interface circuit performs *3A/D conversion of the input signals, and the converted signals are transmitted to the CPU as information signals.
  - *3A/D conversion:
    An abbreviation for Analog/Digital conversion. It converts analog signals to digital signals. This conversion enables calculation to be made in the CPU.
- The CPU compares the received signals with the data in the ROM, makes a decision, and sends the results to the output interface circuit.
- The output interface circuit transmits these results to each system as output signals to instruct operations.
- Performing these series of operations continuously enables optimum control of each function.

(2) LAC function system block diagram

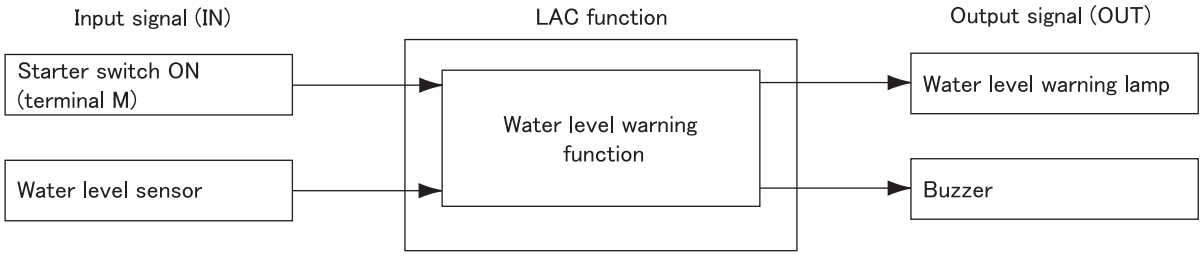

P104464E

(3) Water level warning function

- The LAC function determines ON or OFF state of the water level sensor and causes the water level warning lamp to turn on if necessary.

4.4 Indicator and warning lamp indication warning function

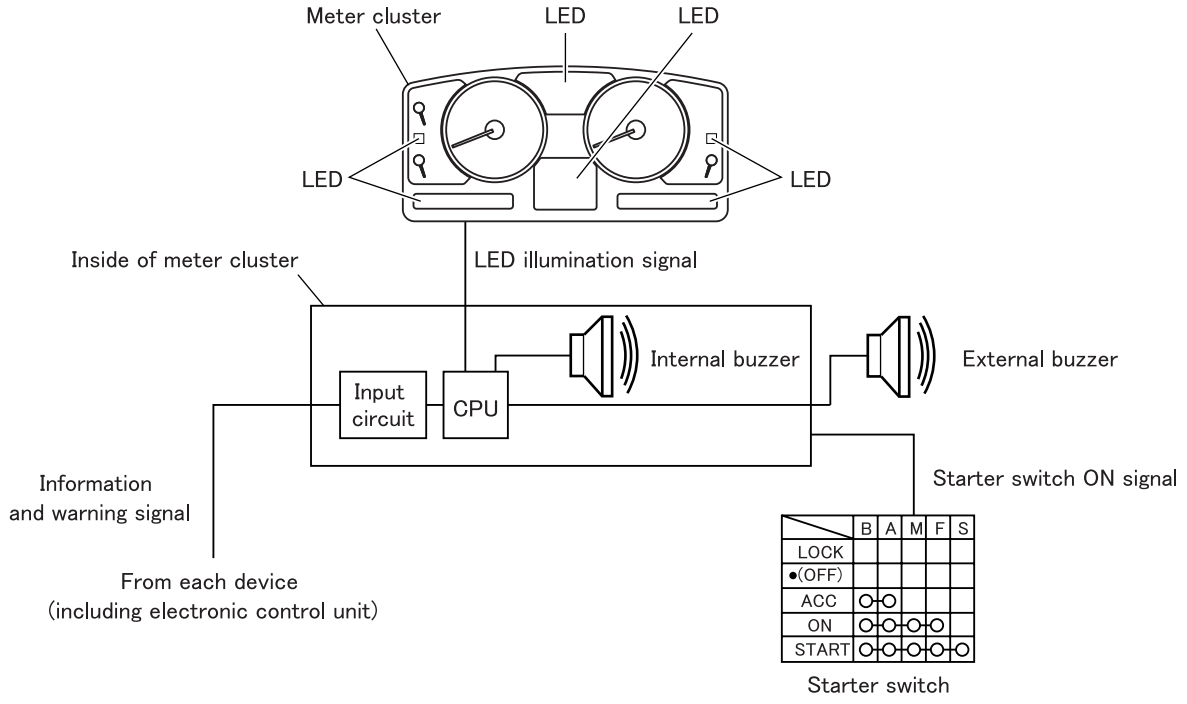

- The indicator and warning lamp indication warning function is intended to advise the driver of necessary vehicle information adequately through symbols and buzzers.
- Information signals from various systems are sent to the central processing unit (CPU) in the meter cluster. The some signals are sent from CPU to appropriate LEDs in the meter cluster for character display and other signals are provided for the internal buzzer in the meter cluster or external buzzer for aural warning.

(1) System block diagram

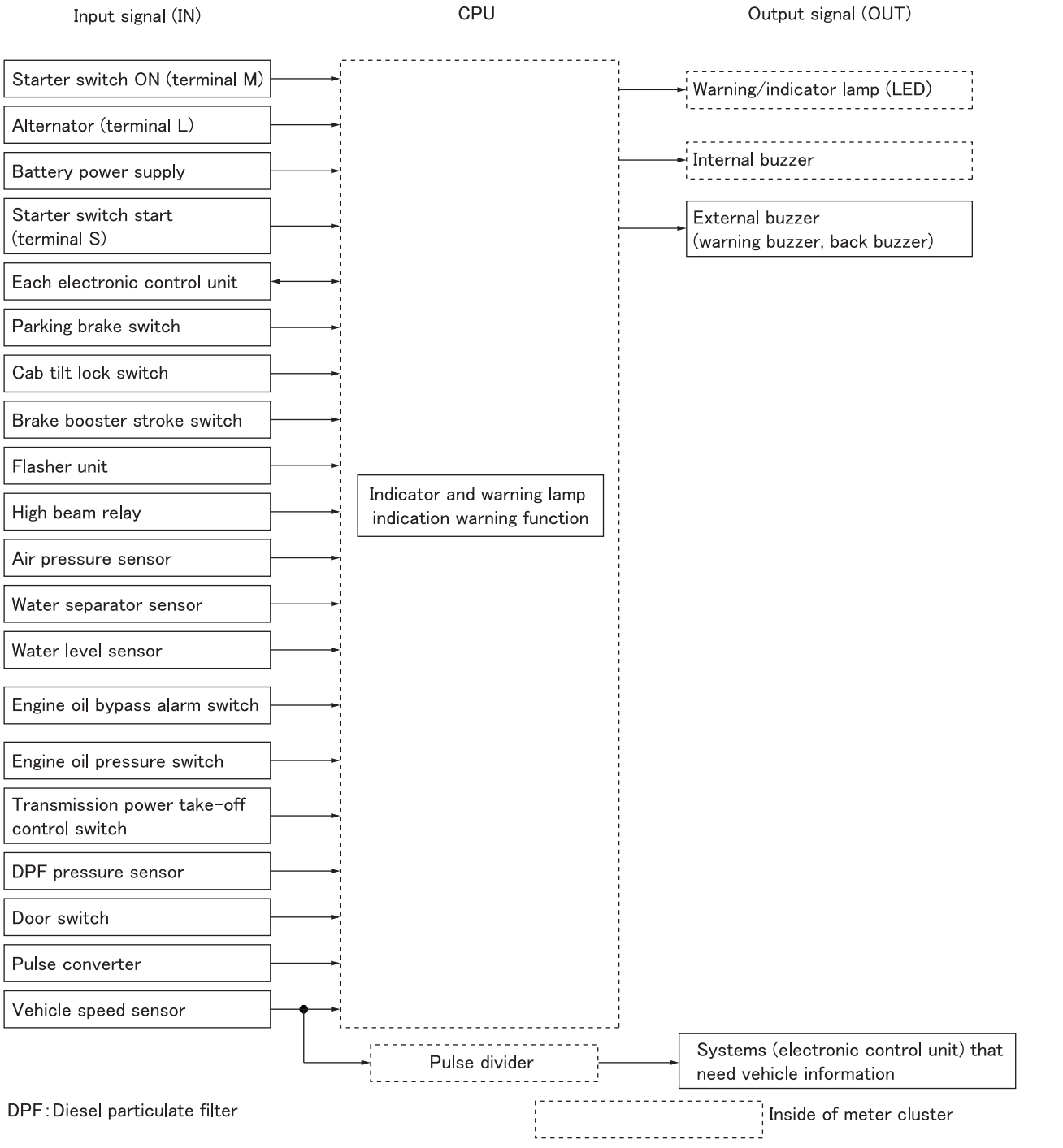

P103825E

(2) When LED turns ON

LED display	Warning buzzer location		Denotation of display and condition for indication	Remarks
	Inside meter cluster	External		
CHECK ENGINE (Red)	–	–	Electronically controlled fuel system faulty (impossible to drive)	See Gr13EA.
CHECK ENGINE (Orange)	–	–	Electronically controlled fuel system faulty (functionality reduced) (possible to drive)	See Gr13EA.
AUTO	–	–	Vehicle driving with the cruise control engaged	See Gr13EB.
MVCU	–	–	MVCU (multifunction vehicle control unit) faulty	See Gr13EB.
	–	–	DPF (diesel particulate filter) cleaning being requested	See Gr13EA.
	–	–	Automatic transmission system faulty	See Gr23A, B.
T/MOIL TEMP	–	–	Extreme high ATF (automatic transmission fluid) temperature	See Gr23A, B.
OD OFF	–	–	Overdrive OFF	See Gr23A, B.
ABS	–	–	Anti-lock brake system electric system faulty	See Gr35E.
	–	–	Charging system faulty	See (125).
	–	–	Engine preheating system in operation	See (220).
	–	–	Headlamp high beam ON	See (310).
	–	–	Daytime running light being lit	See (313).

LED display	Warning buzzer location		Denotation of display and condition for indication	Remarks
	Inside meter cluster	External		
	–	–	Turn signal lamp/hazard warning lamp ON	See (330).
	–	–	Door not completely closed	See (345).
OVER RUN	O	–	Engine speed exceeding 3400 ± 100 rpm	See (410).
PARK BRAKE	–	–	Parking brake engaged	See (510).
BRAKE FLUID	–	O	Low brake fluid • When brake fluid level switch is turned on. (buzzer sounds continuously)	See (515).
BRAKE AIR	–	O	Low air system pressure • When air pressure drops below 500 ± 30 kPa {73 ± 4.4 psi, 5.1 ± 0.3 kgf/cm^2} (buzzer sounds continuously)	See (515).
	–	O	Overheated (even when engine coolant level is normal) Low engine coolant level	See (530).
	–	–	Low engine oil level	See (535).
(Red)	–	O	Low engine oil pressure	See (536).
(Orange)	–	–	Engine oil filter clogged	See (538).
	–	–	• Cab tilt in progress • Cab tilt locked incompletely	See (550).
	–	–	Water level in the fuel filter rises above the specified limit	See (566).
	–	–	Exhaust brake working	See (710).
	–	–	Transmission power take-off working	See (850).

(3) When buzzer only sounds

- These are an internal buzzer in the meter cluster and an external buzzer, either of which is sounded or both, depending on the type of warning.

Buzzer name	Buzzer location		Condition for sounding	Remarks
	Inside meter cluster	External		
Back buzzer	O <Only automatic transmission>	O	When all conditions shown below are met: • Starter switch ON • Shift lever in “R” position	Sounded intermittently 85 ± 25 times a minute.
Inhibitor warning buzzer <Automatic transmission>	O	–	When all conditions shown below are met: • Starter switch ON • Inhibitor indicator activated	Remains continuously sounding.

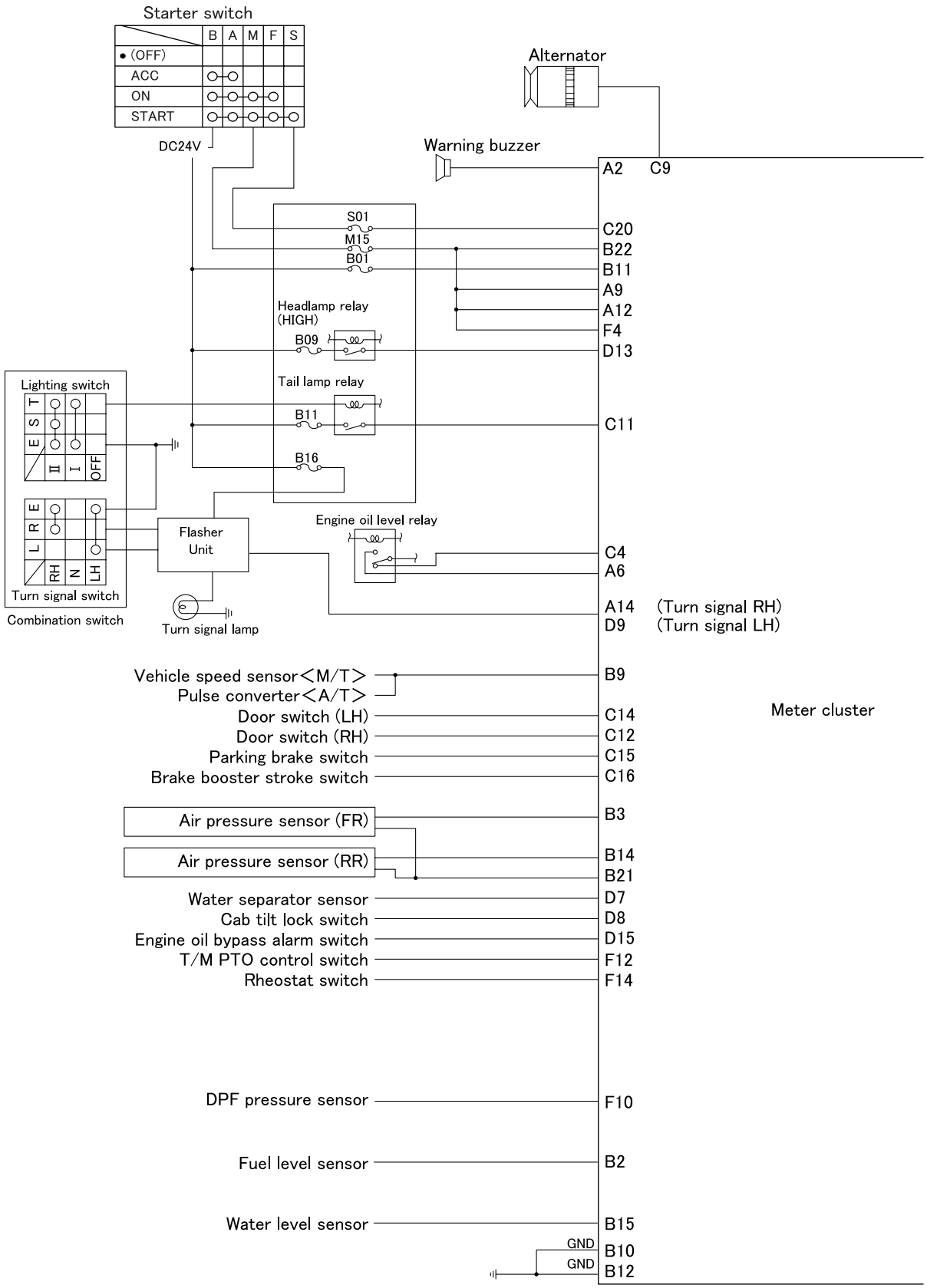
Starter switch
B A M F S
• (OFF)
ACC
ON
START
DC24V
Alternator
Warning buzzer
A2 C9
S01
M15
B01
C20
B22
B11
A9
A12
F4
D13
Headlamp relay (HIGH)
B09
Tail lamp relay
B11
C11
B16
Lighting switch
S T
E
II I OFF
L R E
RH N LH
Turn signal switch
Combination switch
Flasher Unit
Engine oil level relay
C4
A6
A14 (Turn signal RH)
D9 (Turn signal LH)
Turn signal lamp
Vehicle speed sensor<M/T>
Pulse converter<A/T>
B9
Door switch (LH) C14
Door switch (RH) C12
Parking brake switch C15
Brake booster stroke switch C16
Meter cluster
Air pressure sensor (FR) B3
Air pressure sensor (RR) B14
B21
Water separator sensor D7
Cab tilt lock switch D8
Engine oil bypass alarm switch D15
T/M PTO control switch F12
Rheostat switch F14
DPF pressure sensor F10
Fuel level sensor B2
Water level sensor B15
GND B10
GND B12

P103826E

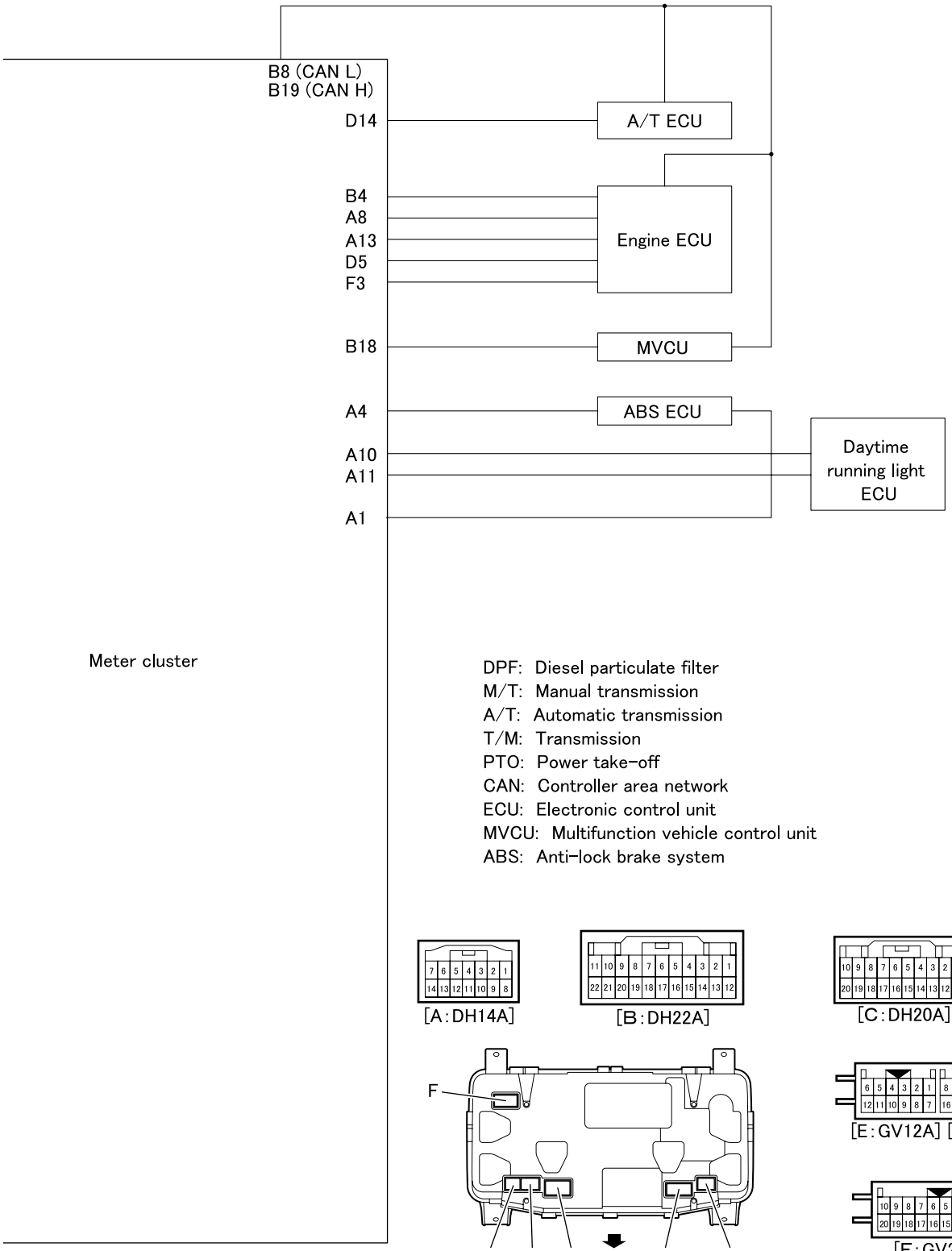

DPF: Diesel particulate filter
M/T: Manual transmission
A/T: Automatic transmission
T/M: Transmission
PTO: Power take-off
CAN: Controller area network
ECU: Electronic control unit
MVCU: Multifunction vehicle control unit
ABS: Anti-lock brake system

[A:DH14A]

[B:DH22A]

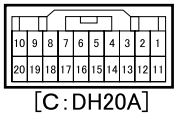
[C:DH20A]

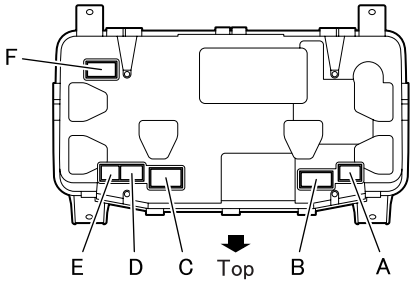

(Meter cluster backward view)

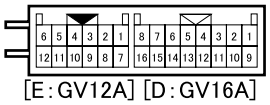
[E:GV12A] [D:GV16A]

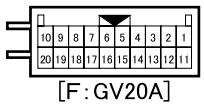
[F:GV20A]

P103827E

5. Daytime Running Light (DRL) System

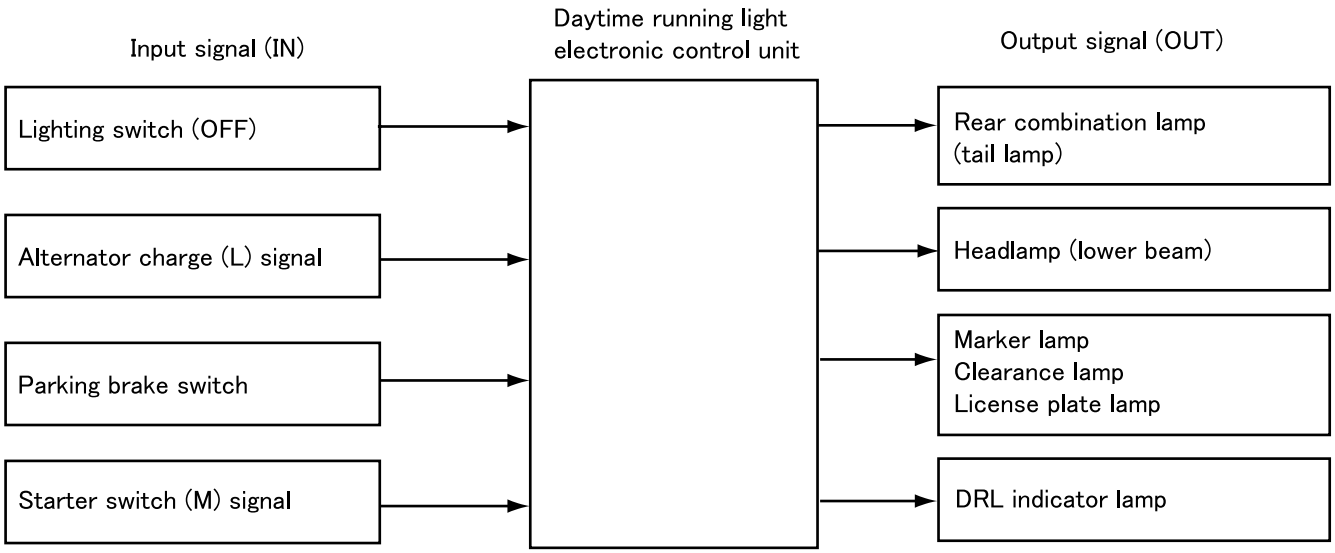

- In a daytime running light (DRL) system, regardless the position of lighting switch while engine is running, the dipped beam of the headlamp and the tail lamp of the rear combinations, position lamp, license plate lamp will light on.
- Except for that the lighting switch is OFF or when the passing switch is ON, the same lamps as usual switch operation will light.

5.1 Timing chart

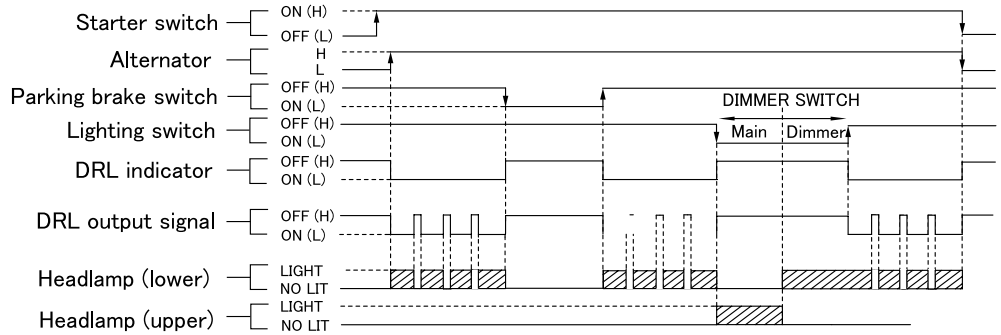

Headlamps repeat ON/OFF operations at 120 Hz according to the above timing chart. Because of the cyclic ON/OFF operations, the headlamps are dimmer than when the headlamp switch is ON.

Explanation of timing chart

- After the engine starts, when alternator begins generating electricity with starter switch in the ON position, headlamps light.
- When parking brake switch is ON, the DRL turns off to switch off the headlamps.

5.2 Daytime running light electronic control unit circuit diagram

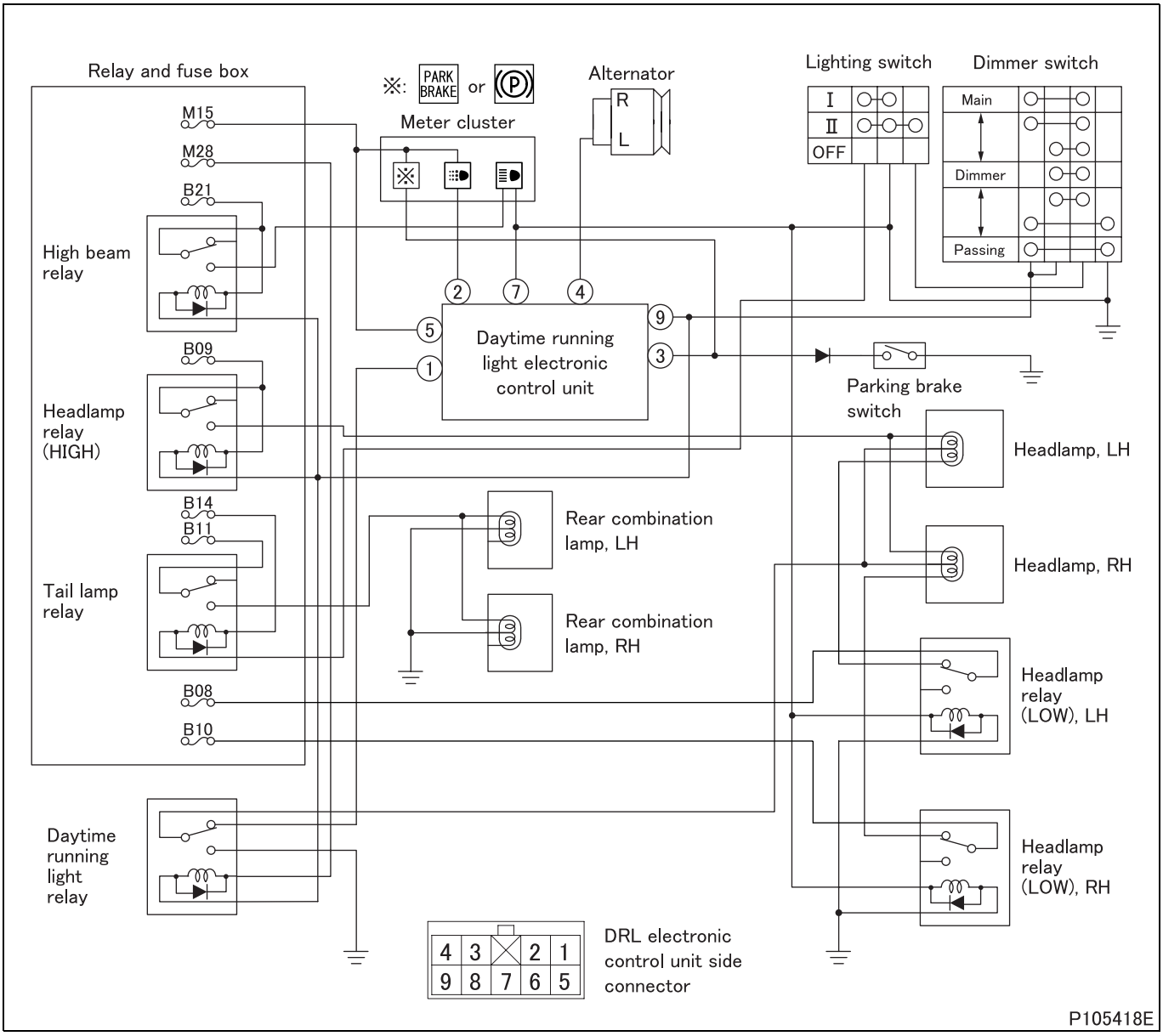

5.3 Daytime running light electronic control unit

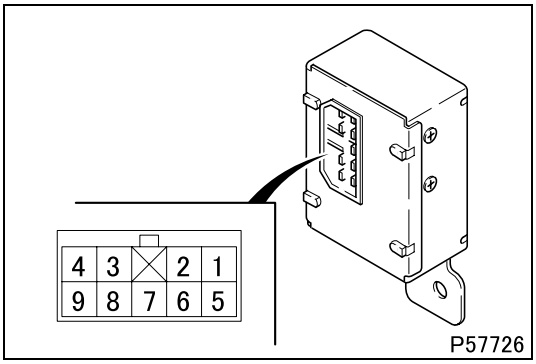

Terminal No.	Connecting destinations	Terminal No.	Connecting destinations
1	DRL relay	6	–
2	DRL indicator lamp	7	Ground
3	Parking brake switch	8	–
4	Alternator L terminal	9	Lighting switch
5	Starter switch M terminal	–	–

6. MUTIC (Multipurpose Timing Control Unit)

6.1 Outline

- This control unit is an integrated control unit for controlling the following functions.
- Windshield washer interlocking wiper-operating function
- Wiper intermitted operation function
- For controlling each function, sensors and switches are needed as sources of information, and they are provided for respective systems.
- Based on the information provided by the sensors and switches, the MUTIC controls above functions by means of the circuits inside itself.

(1) Internal structure of MUTIC

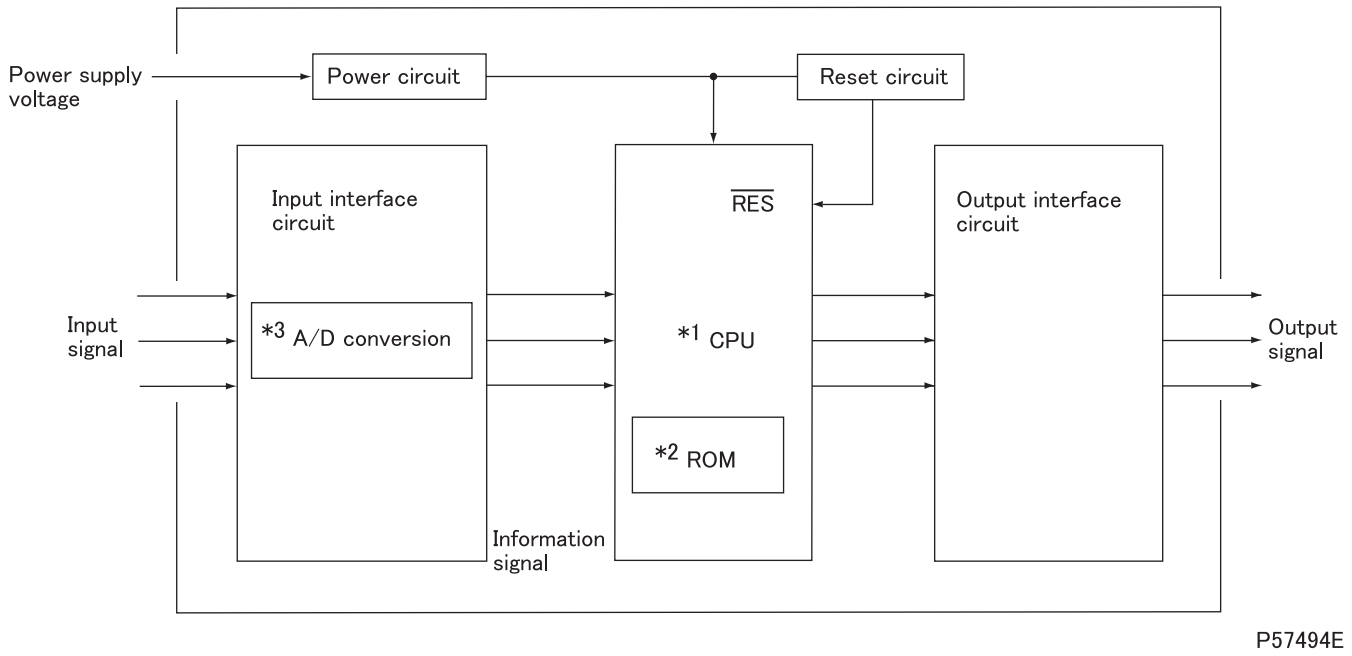

- Internally, the MUTIC is essentially made up of the input interface circuit, *1CPU, *2ROM, and output interface circuit.
  - *1CPU:
    An abbreviation for Central Processing Unit. It compares the input information and the information stored in the ROM, makes a decision and sends commands to the outputs.
  - *2ROM:
    An abbreviation for Read-Only Memory. Its contents are only for reading. It stores fixed data and programs, and such retained information is not deleted even after power is cut off.
- Information sources such as the sensor and switch send input signals to the input interface circuit.
- The input interface circuit performs *3A/D conversion of the input signals, and the converted signals are transmitted to the CPU as information signals.
  - *3A/D conversion:
    An abbreviation for Analog/Digital conversion. It converts analog signals to digital signals. This conversion enables calculation to be made in the CPU.
- The CPU compares the received signals with the data in the ROM, makes a decision, and sends the results to the output interface circuit.
- The output interface circuit transmits these results to each system as output signals to instruct operations.
- Performing these series of operations continuously enables optimum control of each function.

(2) System function schematic

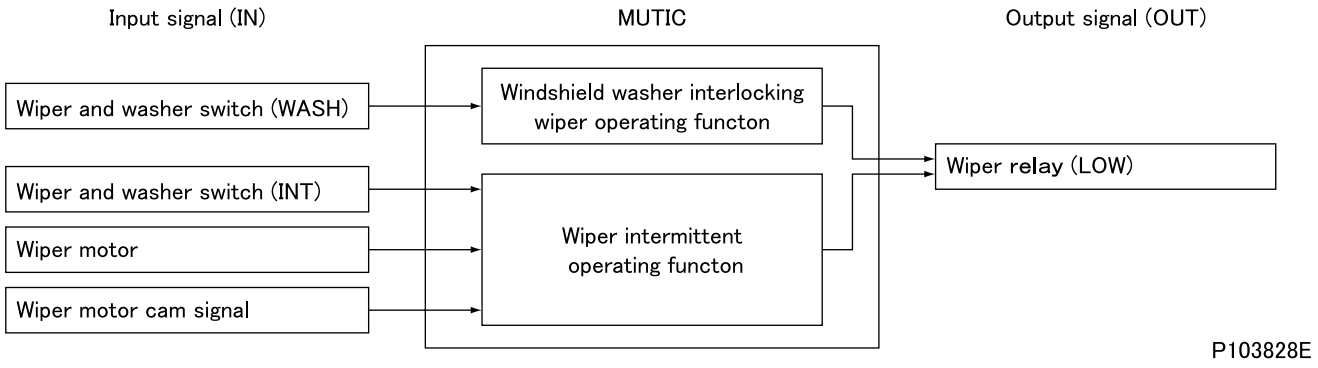

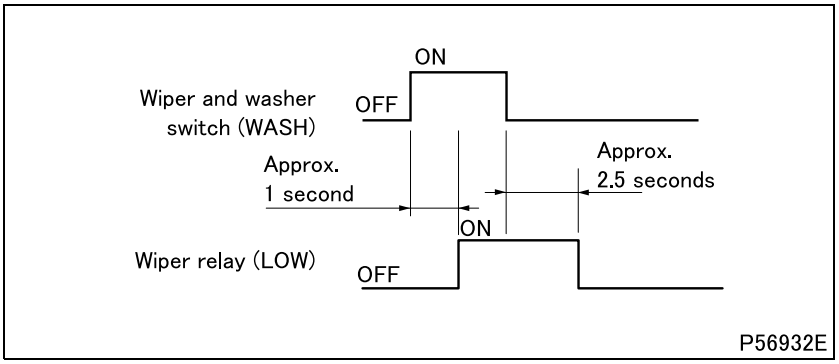

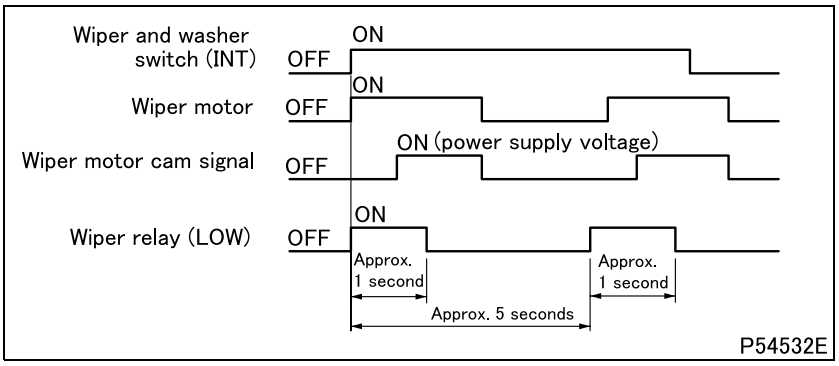

6.2 Windshield washer interlocking wiper operating function

- This function causes the windshield wipers to operate a few times at low speed when the windshield washer switch is turned ON.
- As shown in the drawing, the MUTIC introduces a short delay between detecting the ON condition of the wiper and washer switch (washer switch) and activating the wiper relay.

6.3 Wiper intermittent operating function

- MUTIC control causes intermittent wiper operation to take place as shown in the drawing.

6.4 MUTIC connection diagram

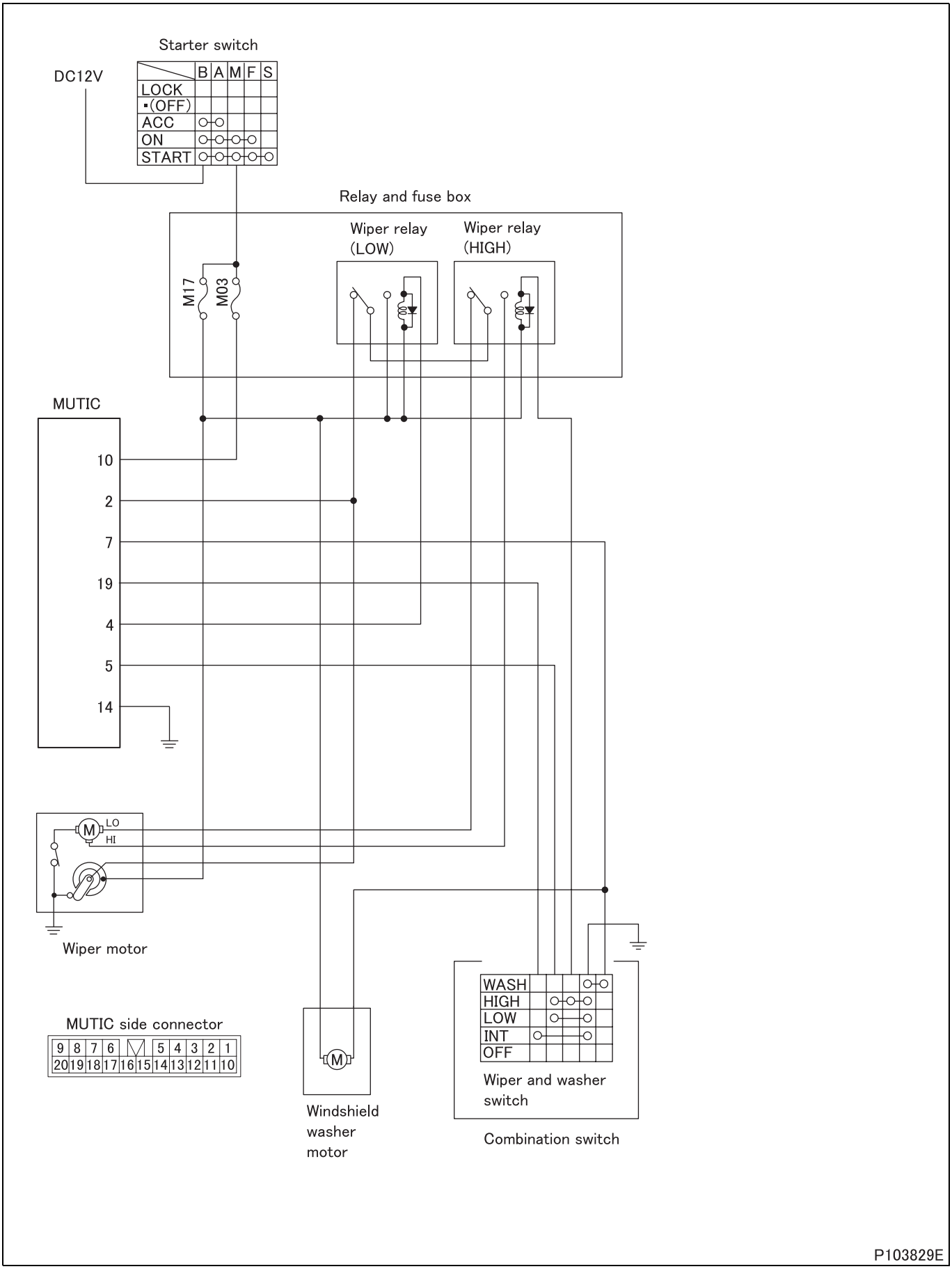

7. Starter Continuous Energizing Preventing Function and Preheating Function

7.1 Outline

- These functions are controlled by the engine electronic control unit.

(1) System function schematic

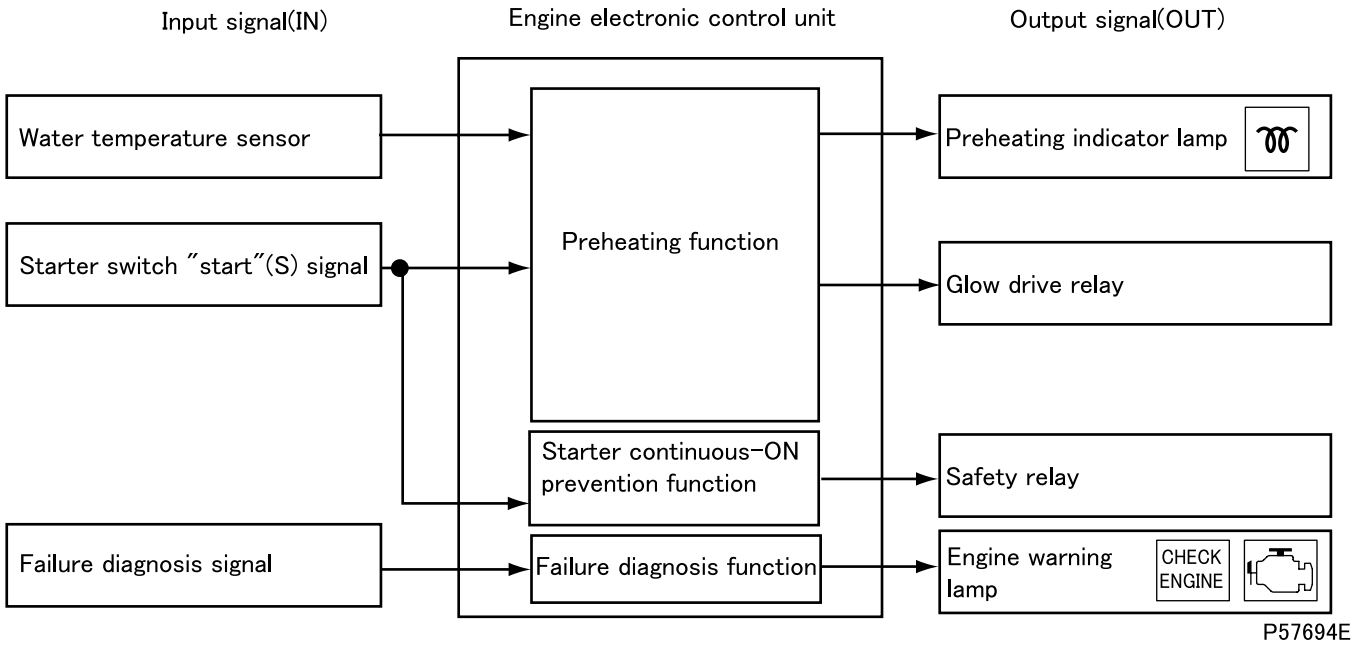

7.2 Starter continuous energizing preventing function

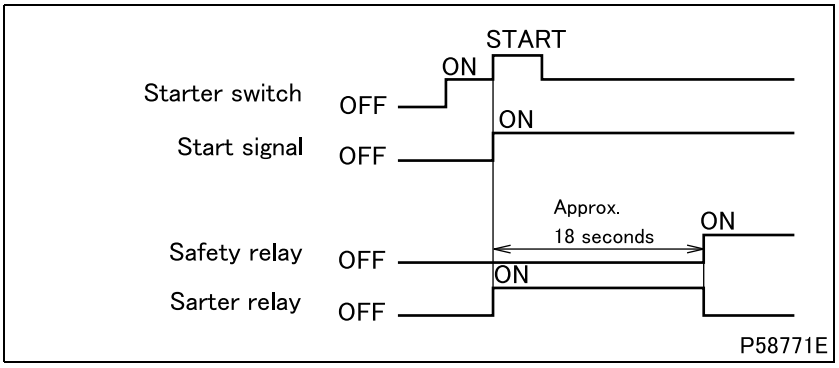

- This function is provided to prevent starter over-run.
- If the starter operates for longer than a predetermined period following engine startup, the engine electronic control unit deems that it has been energized continuously for too long. The engine electronic control unit then stops the flow of current to the starter and starter relay, thereby preventing the starter from seizing.
- If the engine electronic control unit determines, based on the engine speed signal it receives, that the engine has run at or above the specified speed for longer than the specified time period after start-up, the unit trips the safety relay open.

7.3 Preheating function

- This preheating function aims to enhance the engine start up when the engine coolant is low in cold weather or temperature.

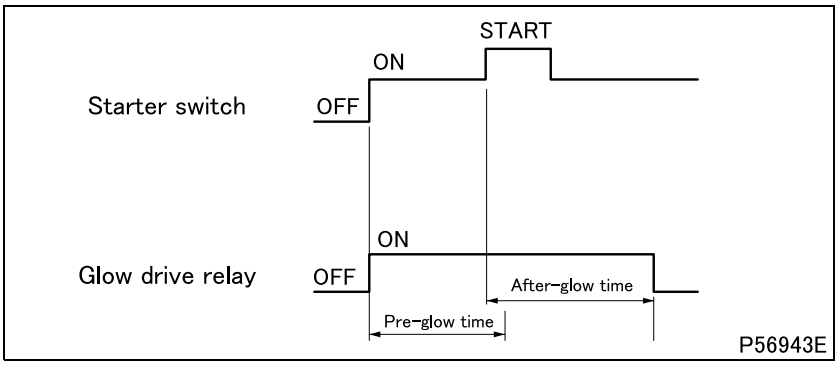

(1) Pre-glow and after-glow

The preheating is operated with a pre-glow before the engine starts and an after-glow after the engine starts. They are controlled by the starter switch (S terminal) signal, engine water temperature signal and the engine rotation signal.

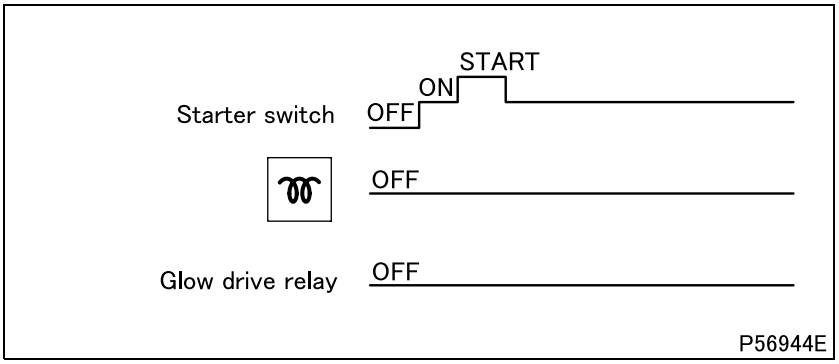

(2) Operation mode

- When the engine coolant temperature is 60°C {140°F} or more.

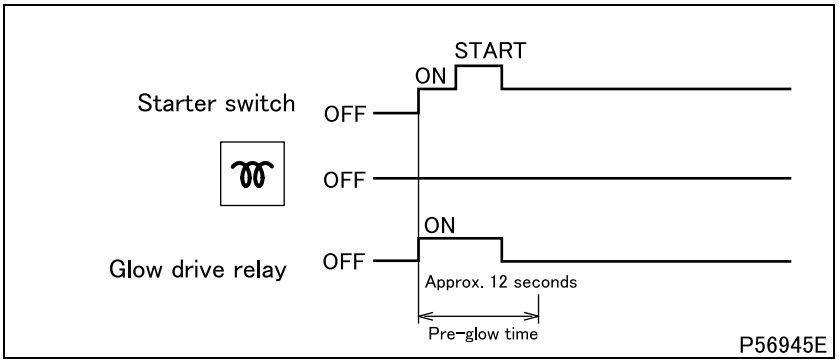

- When the engine coolant temperature is 0 to 60°C {32 to 140°F}.

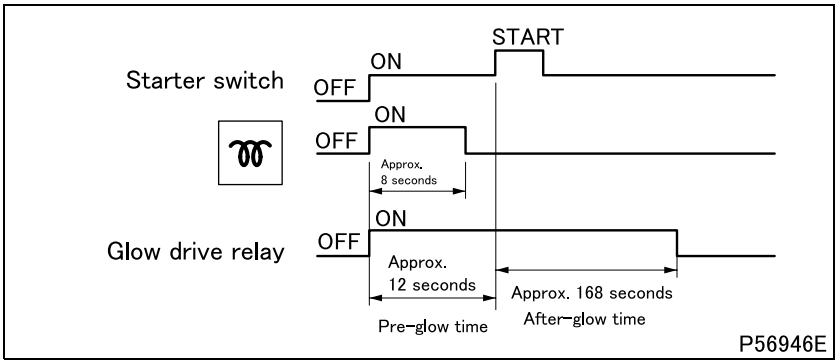

- When the engine coolant temperature is 0°C {32°F} or less.

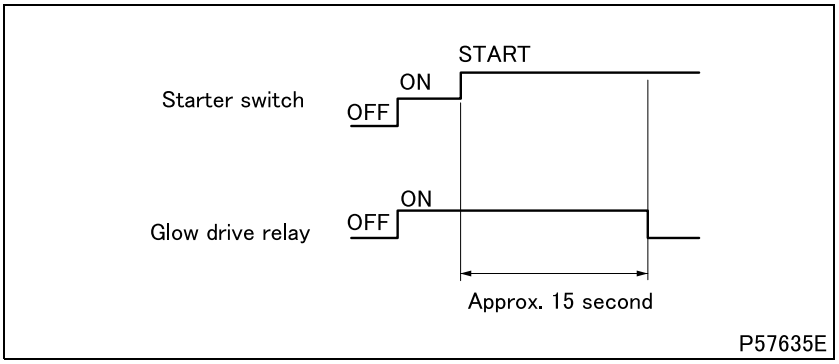

(3) Fail-Safe

- In case the contact point operating the glow relay in engine electronic control unit has melted, the preheating indicator lamp flashes to warn this abnormality.
- Operation mode turns glow relay activation signal to OFF only after all the following conditions are met.
  - Where the engine coolant temperature is 60°C {140°F} or less.
  - Starter switch signal is ON for 15 seconds continuously.
  - Starter switch (S terminal) signal is ON.

7.4 Fault diagnosis function

- While the starter switch is in the ON position, the sensors and other components are continuously monitored for faults. In the event that a component is found faulty, an indication is made in the meter cluster to alert the driver, the fault location is memorized in the form of a diagnosis code, and backup control necessitated by the fault is initiated.
- While the backup control is taking place, the system's functionality is limited to ensure vehicle and driver safety. It is possible to read the memorized diagnosis code using a Multi-Use Tester or from flashing of the warning lamp.

NOTE

- **Diagnosis codes shown by the Multi-Use Tester and those indicated by flashing of the warning lamp are different.**
- **The Multi-Use Tester is capable of showing more detailed diagnosis codes.**

7.5 Engine electronic control unit connection diagram

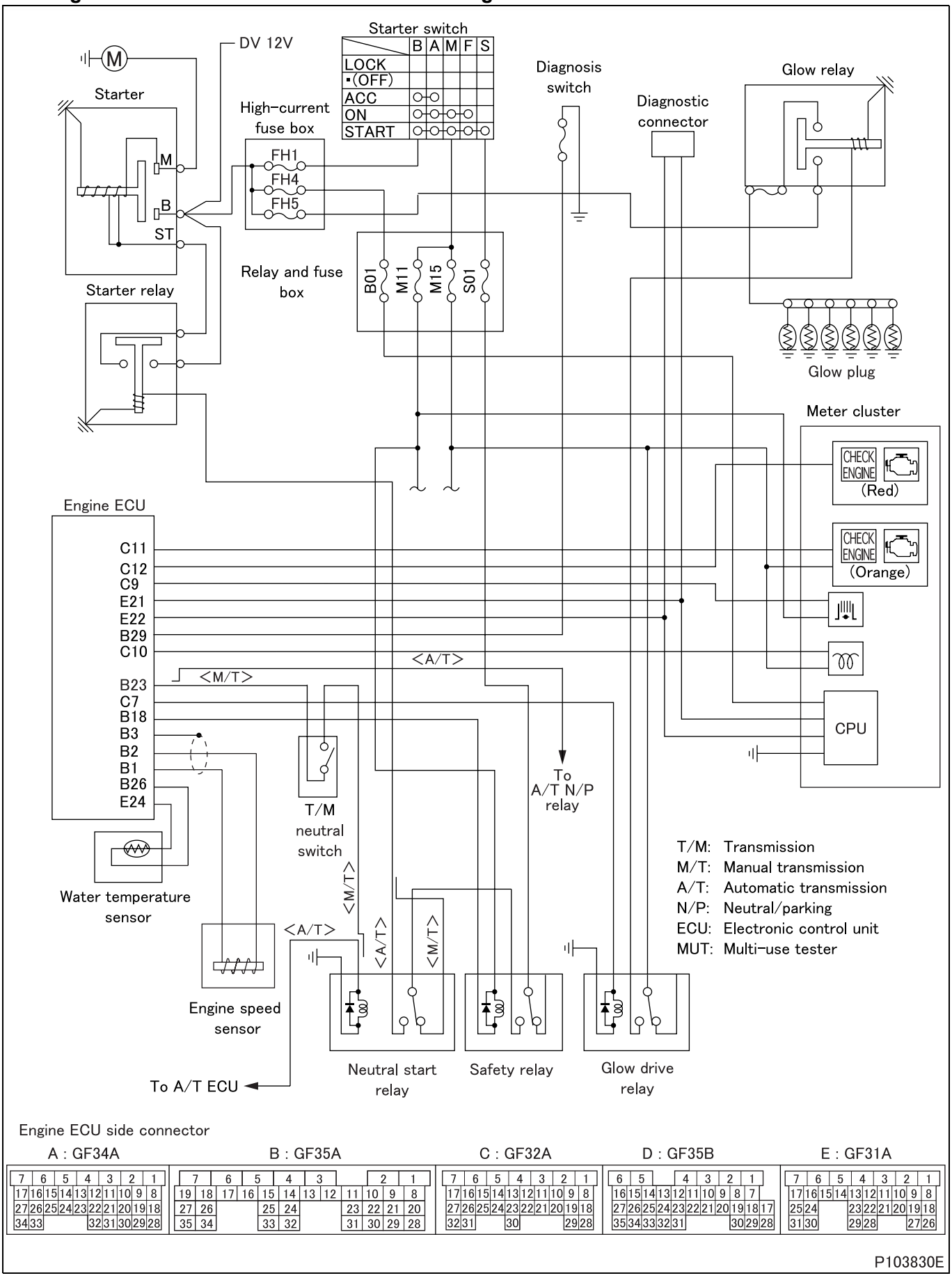

54-00D TROUBLESHOOTING

1. Power and Charging

Symptoms / Possible causes		Battery electrolyte decreases too early.	Battery overheating.	Battery is normal but over-discharged.	Charge warning lamp does not light when starter switch is turned ON, with engine stopped.	Alternator is normal but battery over-discharged.	Reference Gr
Connector connection faulty, harness broken, grounding faulty				O		O	
Fuse blown				O	O	O	
Belts loose				O		O	Gr14
Belts damaged				O		O	Gr14
Battery faulty		O				O	
Alternator	Stator coil broken			O			
	Stator coil short-circuited with core			O			
	Exciting coil broken			O			
	Rectifier faulty			O			
	Regulator faulty		O	O	O		
	Wiring faulty			O			
Meter cluster faulty					O		

2. Engine Starting, Stopping and Preheating

Symptoms / Possible causes		Starter does not operate.	Starter operates but engine does not start			Engine does not stop.	Engine cannot be preheated.	Engine is hard to start.	Engine warm-up function does not operate.	Reference Gr
			Pinion does not engage with ring gear.	Pinion engages with ring gear but does not rotate.	Flywheel rotates but engine does not start.					
Connector connection faulty, harness broken, grounding faulty		O			O	O	O		O	
High-current fuse blown		O								
Fuse blown		O				O	O		O	
Battery voltage insufficient		O		O						
Starter	Magnetic switch contacts stuck or fused together	O								
	Open circuit in magnetic switch coil	O								
	Overrunning clutch malfunctioning			O						
	Pinion worn or damaged		O							
Starter relay faulty		O								
Starter switch faulty		O				O				
Flywheel ring gear worn or damaged			O							Gr11
Glow plugs faulty							O	O		
Glow relay faulty							O	O		
Safety relay faulty		O								
Water temperature sensor faulty							O	O	O	
Engine electronic control unit faulty		O					O	O	O	Gr13EA
Exhaust brake system faulty								O	O	Gr35A, B
Faulty connection of connecting plate							O	O		
Transmission neutral switch faulty									O	
Neutral start relay faulty <A/T>		O								
Inhibitor switch faulty <A/T>		O								
Vehicle interface module faulty <FM (A/T)>		O								Gr23B
Safety relay faulty		O								

A/T: Automatic transmission

3. Lighting

Symptoms / Possible causes		Headlamp				Tail lamp does not light.	Stop lamp does not light.	Identification lamp, side marker lamp	Parking lamp does not light.	License plate lamp does not light.	Backup lamp does not light.	Back buzzer does not sound.	Reference Gr
		Does not light.	Dim.	Does not switch to upper beam.	Does not switch to lower beam.								
Connector connection faulty, harness broken, grounding faulty		O				O	O	O	O	O	O	O	
Fuse blown		O				O	O	O	O	O	O	O	
Battery voltage insufficient			O										
Alternator output insufficient			O										
Bulb burnt-out		O				O	O	O	O	O	O	O	
Power (wattage) of bulb is lower than specified value													
Power (wattage) of bulb is higher than specified value													
Combination switch	Lighting switch faulty	O				O		O	O	O		O	
	Turn signal lamp switch faulty												
	Dimmer switch faulty			O	O								
	Hazard warning lamp switch faulty												
Headlamp relay (HIGH, LOW) faulty		O		O	O								
Tail lamp relay faulty						O		O	O	O		O	
Stop lamp relay faulty							O						
Stop lamp switch faulty							O						
Flasher unit faulty													
Backup lamp switch faulty											O		
Back buzzer faulty												O	
Personal lamp switch faulty													
Personal lamp faulty													
Door switch faulty													
Hazard warning lamp switch faulty													
Rheostat switch faulty													

Symptoms / Possible causes		Turn signal lamp (serving also as hazard warning lamp)					Personal lamp does not light.	Interior illumination lamps for meters, radio system, etc. do not light.	Reference Gr
		Does not blink.	Stay ON.	Blinks too slowly.	Blinks too quickly.	Blinks irregularly.			
Connector connection faulty, harness broken, grounding faulty		O					O	O	
Fuse blown		O					O		
Battery voltage insufficient			O						
Alternator output insufficient			O						
Bulb burnt-out		O			O		O	O	
Power (wattage) of bulb is lower than specified value					O				
Power (wattage) of bulb is higher than specified value				O					
Combination switch	Lighting switch faulty							O	
	Turn signal lamp switch faulty								
	Dimmer switch faulty								
	Hazard warning lamp switch faulty	O	O						
Headlamp relay (HIGH, LOW) faulty									
Tail lamp relay faulty								O	
Stop lamp relay faulty									
Turn signal lamp relay faulty		O							
Stop lamp switch faulty									
Flasher unit faulty		O	O	O	O	O			
Backup lamp switch faulty									
Back buzzer faulty									
Personal lamp switch faulty							O		
Personal lamp faulty							O		
Door switch faulty							O		
Rheostat switch faulty								O	

Symptoms / Possible causes		Van body dome light does not light.	Daytime running light system does not operate after engine starts, and headlamps do not light.	Reference Gr
Connector connection faulty, harness broken, grounding faulty		O	O	
Fuse blown		O		
Battery voltage insufficient				
Alternator output insufficient				
Bulb burnt-out		O		
Power (wattage) of bulb is lower than specified value				
Power (wattage) of bulb is higher than specified value				
Combination switch	Lighting switch faulty	O		
	Turn signal lamp switch faulty			
	Dimmer switch faulty			
	Hazard warning lamp switch faulty			
Headlamp relay (HIGH, LOW) faulty			O	
Tail lamp relay faulty			O	
Stop lamp relay faulty				
Turn signal lamp relay faulty				
Daytime running light relay			O	
Van body dome light relay faulty		O		
Van body dome light switch faulty		O		
Daytime running light electronic control unit faulty			O	

4. Meter

Possible causes \ Symptoms		Pointer does not move.	Pointer movement unstable.	Indication error large.	Abnormal noise from meter.	Buzzer does not sound.	Reference Gr
Connector connection faulty, harness broken, grounding faulty		O	O			O	
Fuse blown		O					
Internal circuits of meter cluster faulty		O	O	O		O	
Printed wiring board of meter cluster faulty		O					
Tachometer	Engine speed sensor coil open-circuited	O					
	Engine speed sensor improperly mounted	O	O				Gr11
	Tachometer faulty	O	O	O	O		
	Engine electronic control unit faulty	O	O	O			Gr13EA
Speedometer	Vehicle speed sensor faulty	O	O	O			
	Vehicle speed sensor improperly mounted	O	O	O			
	Pulse converter faulty	O	O	O			
	Specified tires not used			O			Gr31
	Tires worn or inflation pressure incorrect			O			Gr31
	Specified speedometer gear of transmission not used (difference in gear ratio)			O			Gr22
	Installation angle of speedometer gear bushing on transmission incorrect (not set at correct gear ratio position)			O			Gr22
	Speedometer faulty	O	O	O	O		
Water temperature gauge	Water temperature sensor faulty	O		O			
	Water temperature gauge faulty	O		O			
	Thermostat does not close	O					Gr14
	Engine electronic control unit faulty	O	O	O			Gr13EA
Fuel gauge	Fuel level sensor faulty	O		O			
	Fuel gauge faulty	O		O			
Air gauge	Air pressure sensor faulty	O	O	O			

5. Cigarette Lighter

Symptoms / Possible causes	Cigarette lighter		Audio						Reference Gr
	Does not glow.	Does not return.	Radio does not work.	Specific frequency band does not work.	Spurious noise generated.	Sound quality poor.	Sound from one side only.	Left and right volume different.	
Connector connection faulty, harness broken, grounding faulty	O		O		O		O		
Fuse blown	O		O						
Cigarette lighter faulty	O	O							
Antenna and antenna cable connection faulty			O		O				
Radio amplifier faulty			O						
Radio tuner faulty			O						
Speaker faulty			O	O	O	O	O	O	
Left and right speaker impedance different								O	

6. Accessory Noise Generation Source

Accessory	Noise	Symptoms
Alternator	Whistling	High pitch sound when accelerator pedal suddenly pressed (Stops soon after engine stopped)
Water temperature gauge	Scratching	Occurs when engine running (Continues for a while after engine stops)
Engine oil pressure switch	Rattling	Depends on engine speed (Does not occur during idling)
Fuel level sensor	Scratching	Occurs when engine suddenly revved, while running on rough roads, or starter switch turned ON
Flasher unit	Banging	When turn signal blinks
Horn	Hissing	Occurs when horn button pressed or released
Wiper motor	Whining	Depends on windshield wiper speed
Washer motor	Whining	When windshield washer operates

7. Horn

Symptoms / Possible causes	Horn				Reference Gr
	No sound.	Continuous sound.	Small sound.	Sound quality poor.	
Connector connection faulty, harness broken, grounding faulty	O				
Fuse blown	O				
Horn switch faulty	O	O			
Horn faulty	O		O	O	
Horn stay warped			O	O	
Battery voltage insufficient	O		O		
Air leaking from air system	O		O	O	

54-01 POWER, CHARGE AND GROUND CIRCUIT

HIGH-CURRENT FUSE BOX

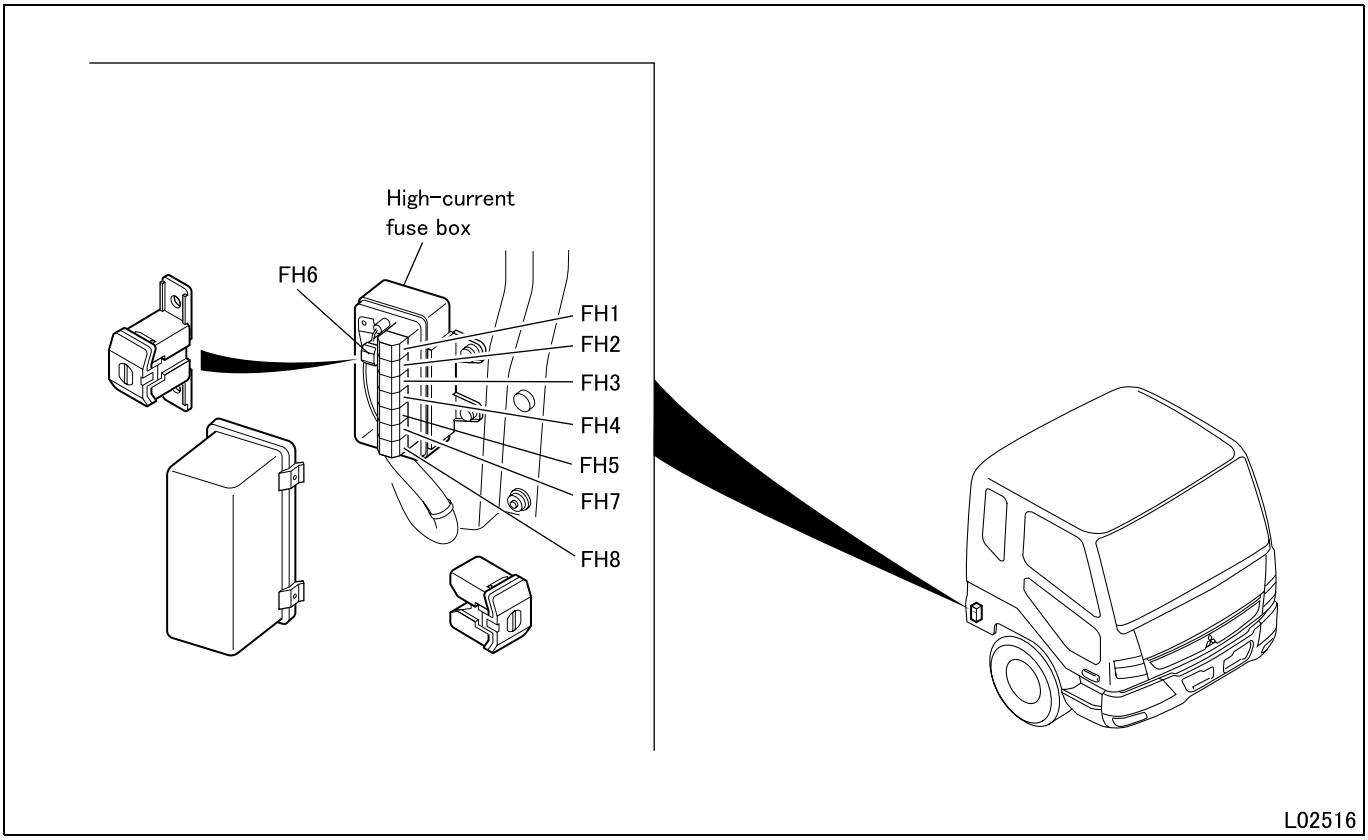

CAUTION ⚠

- **To prevent possible injury, be sure to disconnect the negative (–) cable of the battery and insulate it with tape before removing high-current fuses.**
- **With the negative (–) cable of the battery connected, some high-current fuses are always under battery voltage. An arc will be generated when any of these high-current fuses is replaced without disconnecting the battery negative cable, and this could cause the related electric devices to be damaged.**
- **If a fuse blows out, identify and remedy the cause, then replace the fuse.**
- **Be sure to use the fuse with the specified ampere.**

High-current fuse box

Fuse No.	Main load	Capacity
FH1	Starter switch (terminal B)	60A
FH2	Fuse (B07 to B16)	60A
FH3	Fuse (B17 to B27)	60A
FH4	Fuse (B01 to B06)	60A
FH5	Glow relay (terminal B)	50A
FH6	Alternator (terminal B)	140A
FH7	Fuse (B28 to B37)	60A
FH8	A/T<FM>	60A

A/T: Automatic transmission

RELAY AND FUSE BOX

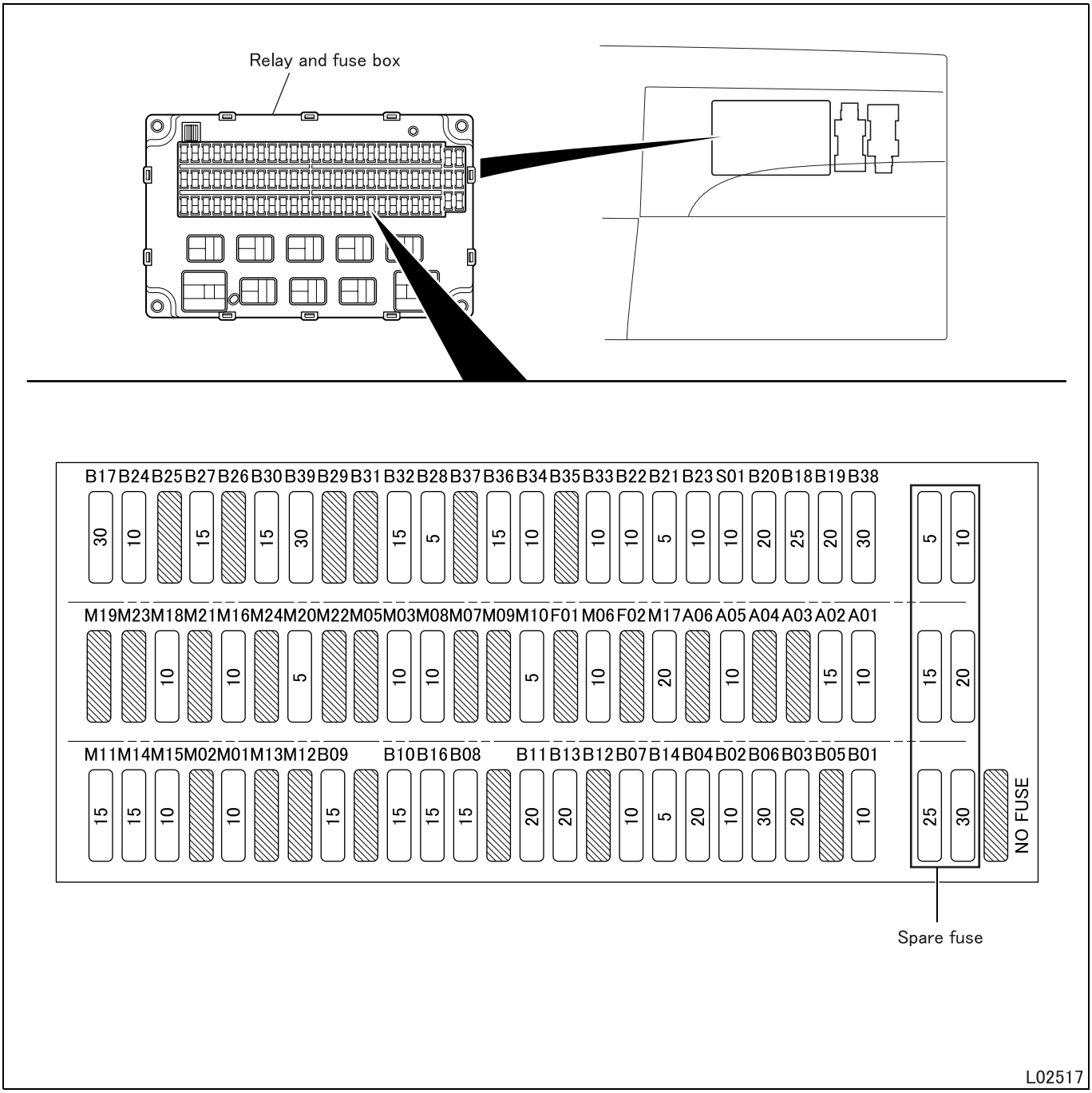

CAUTION ⚠

- **To prevent possible injury, be sure to disconnect the negative (–) cable of the battery and insulate it with tape before removing fuses.**
- **With the negative (–) cable of the battery connected, some fuses are always under battery voltage. An arc will be generated when any of these high-current fuses is replaced without disconnecting the battery negative cable, and this could cause the related electric devices to be damaged.**
- **If a fuse blows out, identify and remedy the cause, then replace the fuse.**
- **Be sure to use a fuse with the specified ampere.**

Relay and fuse box

Fuse No.	Main load	Capacity
A01	Audio	10A
A02	Cigarette lighter	15A
A03	–	–
A04	–	–
A05	Air suspension	10A
A06	–	–
B01	Meter	10A
B02	MVCU	10A
B03	EDU relay	20A
B04	ECU main relay	20A
B05	–	–
B06	ABS	30A
B07	Stop lamp	10A
B08	Headlamp, LH (LO)	15A
B09	Headlamp (HI)	15A
B10	Headlamp, RH (LO)	15A
B11	Tail lamp	20A
B12	–	–
B13	Spare D.C (tail) relay	20A
B14	Tail lamp relay	5A
B15	–	–
B16	Turn/hazard	15A
B17	Blower	30A
B18	Power window (driver)	25A
B19	Power window (assistant)	20A
B20	Air-conditioner	20A
B21	Meter (high beam)	5A
B22	Audio	10A
B23	Cab lamp	10A
B24	Opt (B)	10A
B25	–	–
B26	–	–
B27	Horn	15A
B28	DRL	5A
B29	–	–
B30	A/T	15A

Fuse No.	Main load	Capacity
B31	–	–
B32	Multi-Use Tester	15A
B33	Opt (ACC)	10A
B34	Mirror heater	10A
B35	–	–
B36	Van body dome light	15A
B37	–	–
B38	ATF cooler fan 1	30A
B39	ATF cooler fan 2	30A
F01	–	–
F02	–	–
M01	MVCU	10A
M02	–	–
M03	MUTIC	10A
M04	–	–
M05	–	–
M06	Power window	10A
M07	–	–
M08	Opt (M)	10A
M09	–	–
M10	Engine ECU	5A
M11	Exhaust brake	15A
M12	–	–
M13	–	–
M14	Air dryer	15A
M15	Meter/DRL	10A
M16	Backup lamp	10A
M17	Wiper/Washer	20A
M18	A/T	10A
M19	–	–
M20	ABS	5A
M21	–	–
M22	–	–
M23	–	–
M24	–	–
S01	Starter	10A

ABS: Anti-lock brake system
DRL: Daytime running light
MVCU: Multifunction vehicle control unit
ECU: Electronic control unit
ATF: Automatic transmission fluid
A/T: Automatic transmission
EDU: Electronic drive unit

NOTE

- **The above table shows only main loads and the fuses protecting their circuits. For the fuses associated with any loads not listed here, refer to (110).**

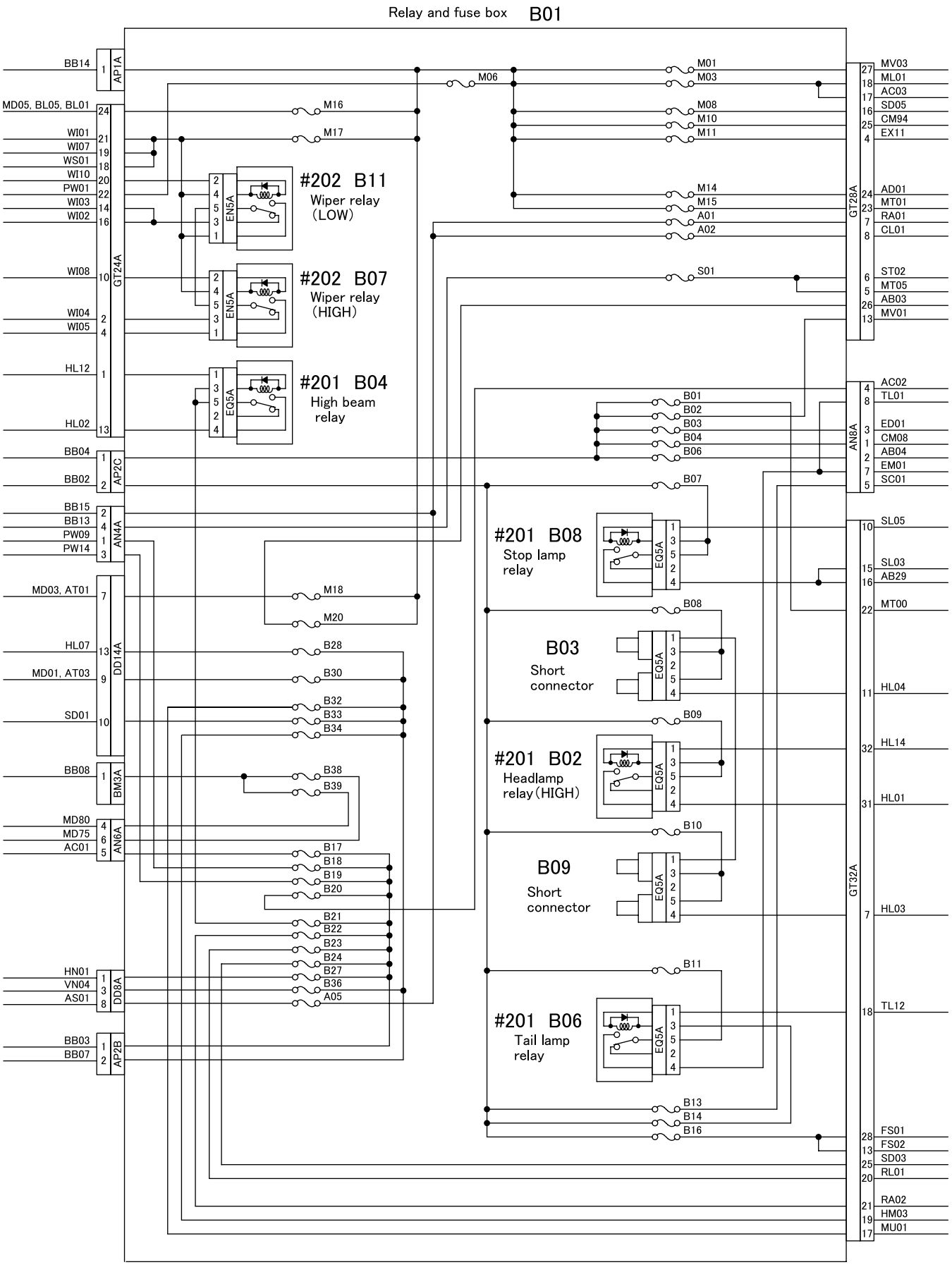
Relay and fuse box B01
#202 B11
Wiper relay (LOW)
#202 B07
Wiper relay (HIGH)
#201 B04
High beam relay
#201 B08
Stop lamp relay
B03
Short connector
#201 B02
Headlamp relay(HIGH)
B09
Short connector
#201 B06
Tail lamp relay
BB14
MD05, BL05, BL01
WI01
WI07
WS01
WI10
PW01
WI03
WI02
WI08
WI04
WI05
HL12
HL02
BB04
BB02
BB15
BB13
PW09
PW14
MD03, AT01
HL07
MD01, AT03
SD01
BB08
MD80
MD75
AC01
HN01
VN04
AS01
BB03
BB07
AP1A
GT24A
EN5A
EQ5A
AP2C
AN4A
DD14A
BM3A
AN6A
DD8A
AP2B
M06
M16
M17
M18
M20
B28
B30
B32
B33
B34
B38
B39
B17
B18
B19
B20
B21
B22
B23
B24
B27
B36
A05
M01
M03
M08
M10
M11
M14
M15
A01
A02
S01
B01
B02
B03
B04
B06
B07
B08
B09
B10
B11
B13
B14
B16
GT28A
AN8A
GT32A
MV03
ML01
AC03
SD05
CM94
EX11
AD01
MT01
RA01
CL01
ST02
MT05
AB03
MV01
AC02
TL01
ED01
CM08
AB04
EM01
SC01
SL05
SL03
AB29
MT00
HL04
HL14
HL01
HL03
TL12
FS01
FS02
SD03
RL01
RA02
HM03
MU01

104-C04061

Battery to fuse

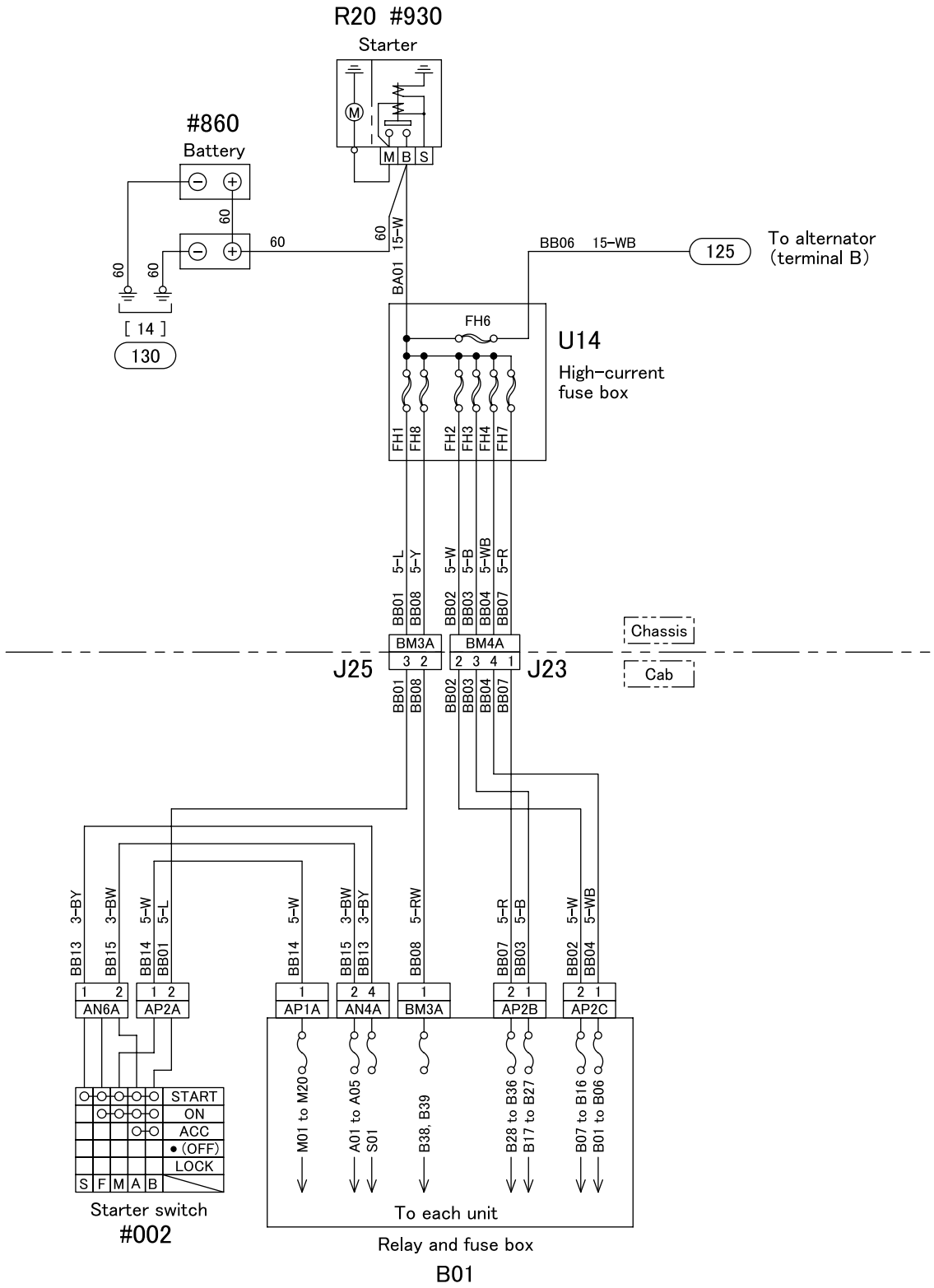

110-C04062

Relay and fuse box
(Fuse A01 to A05)

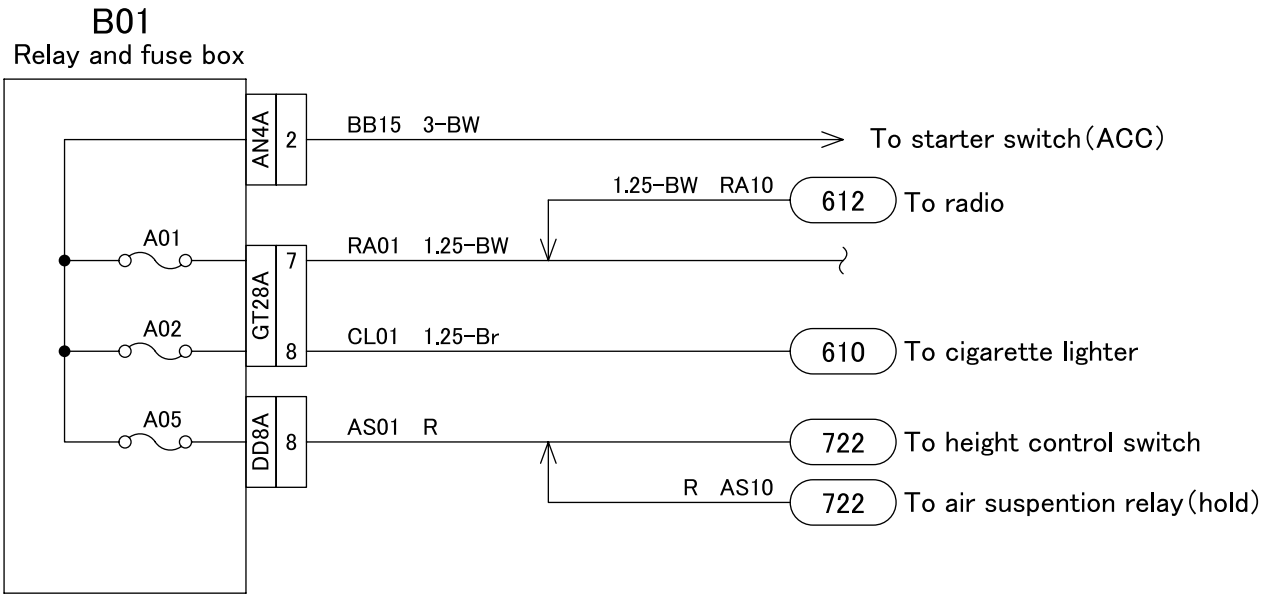

110-C04063

Relay and fuse box
(Fuse B01 to B06)

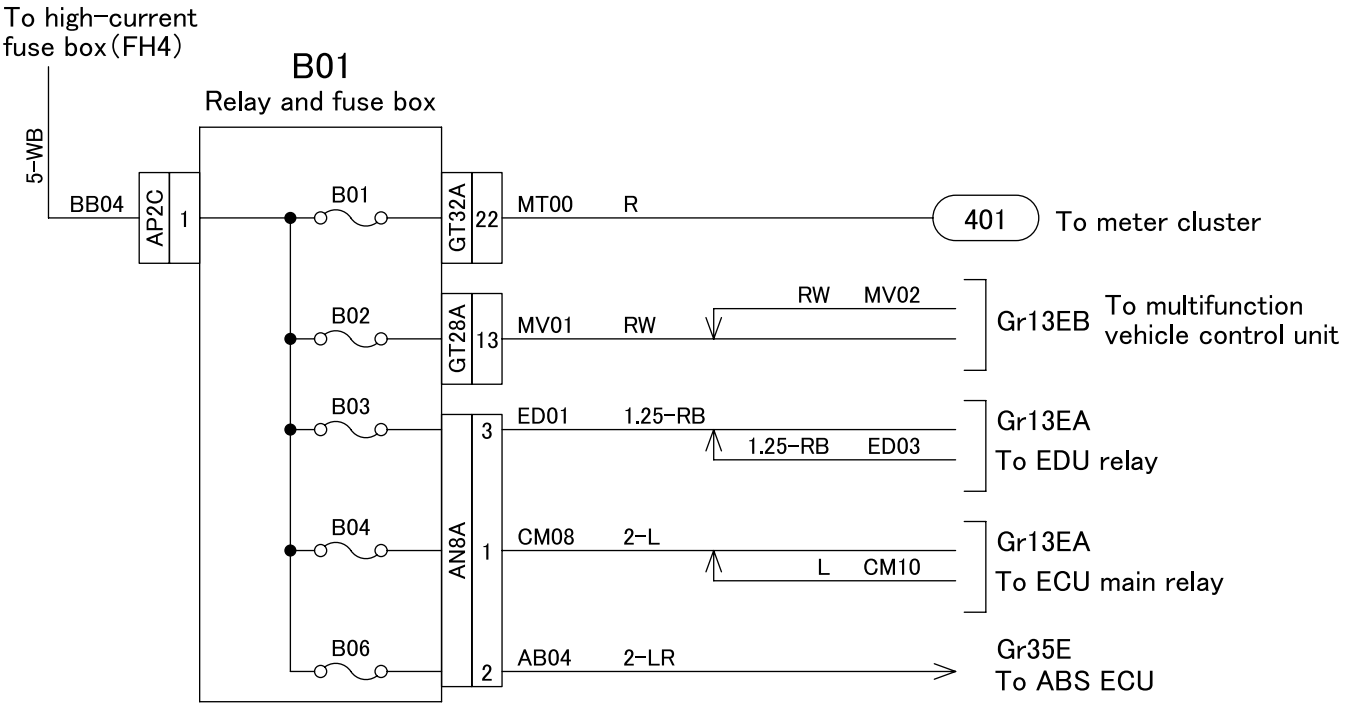

ECU : Electronic control unit
EDU : Electronic drive unit
ABS : Anti-lock brake system

110-C04064

Relay and fuse box
(Fuse B07 to B10)

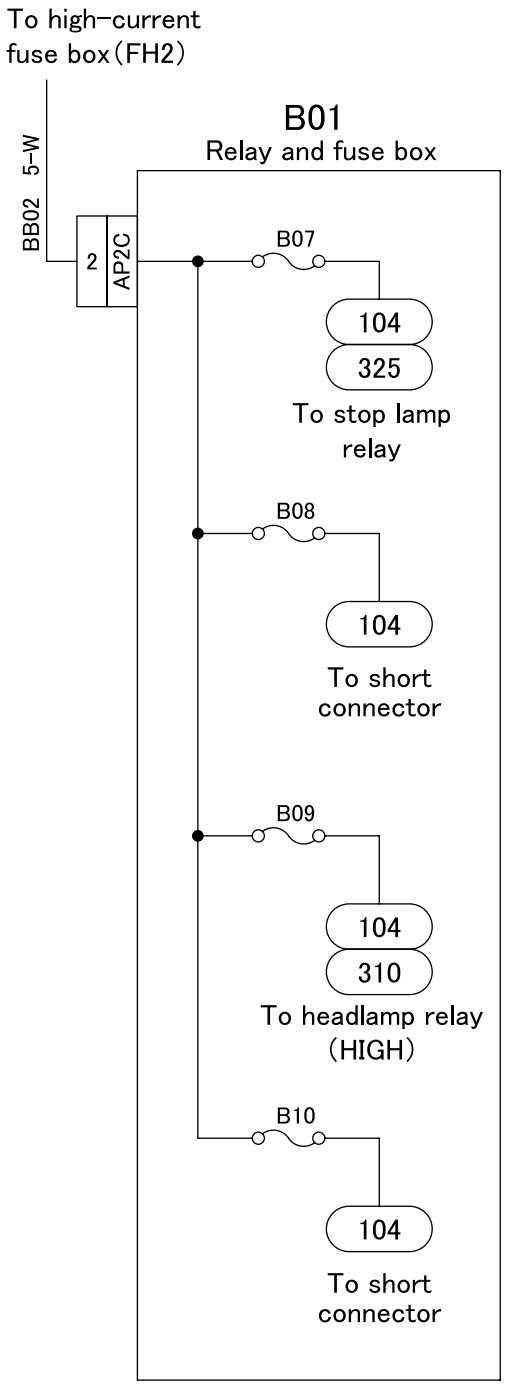

110-C04065

Relay and fuse box
(Fuse B11 to B14)

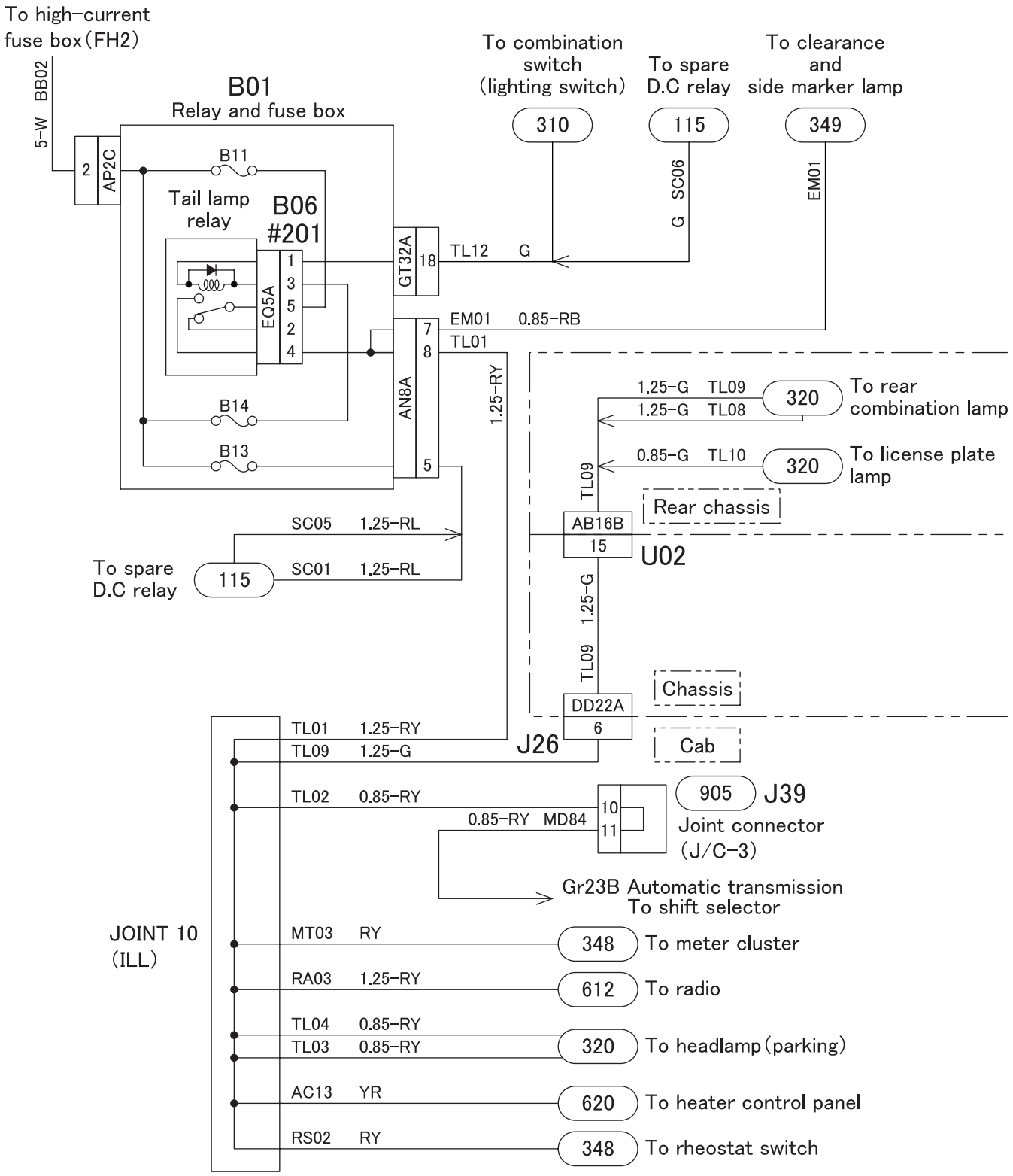

110-C04066

Relay and fuse box
(Fuse B16 to B20)

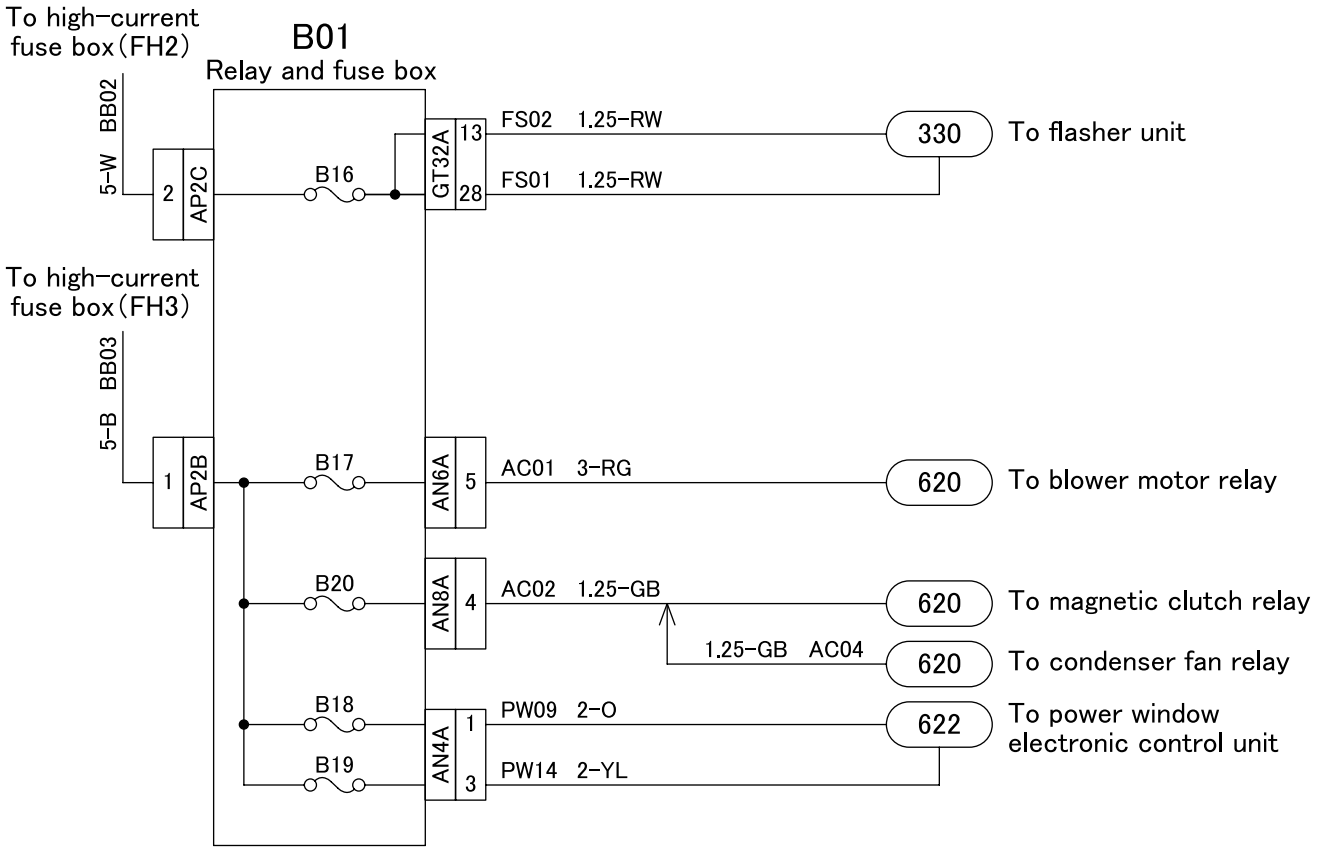

110-C04067

Relay and fuse box
(Fuse B21 to B39)

DRL : Daytime running light
ECU : Electronic control unit
VIM : Vehicle interface module
A/T : Automatic transmission

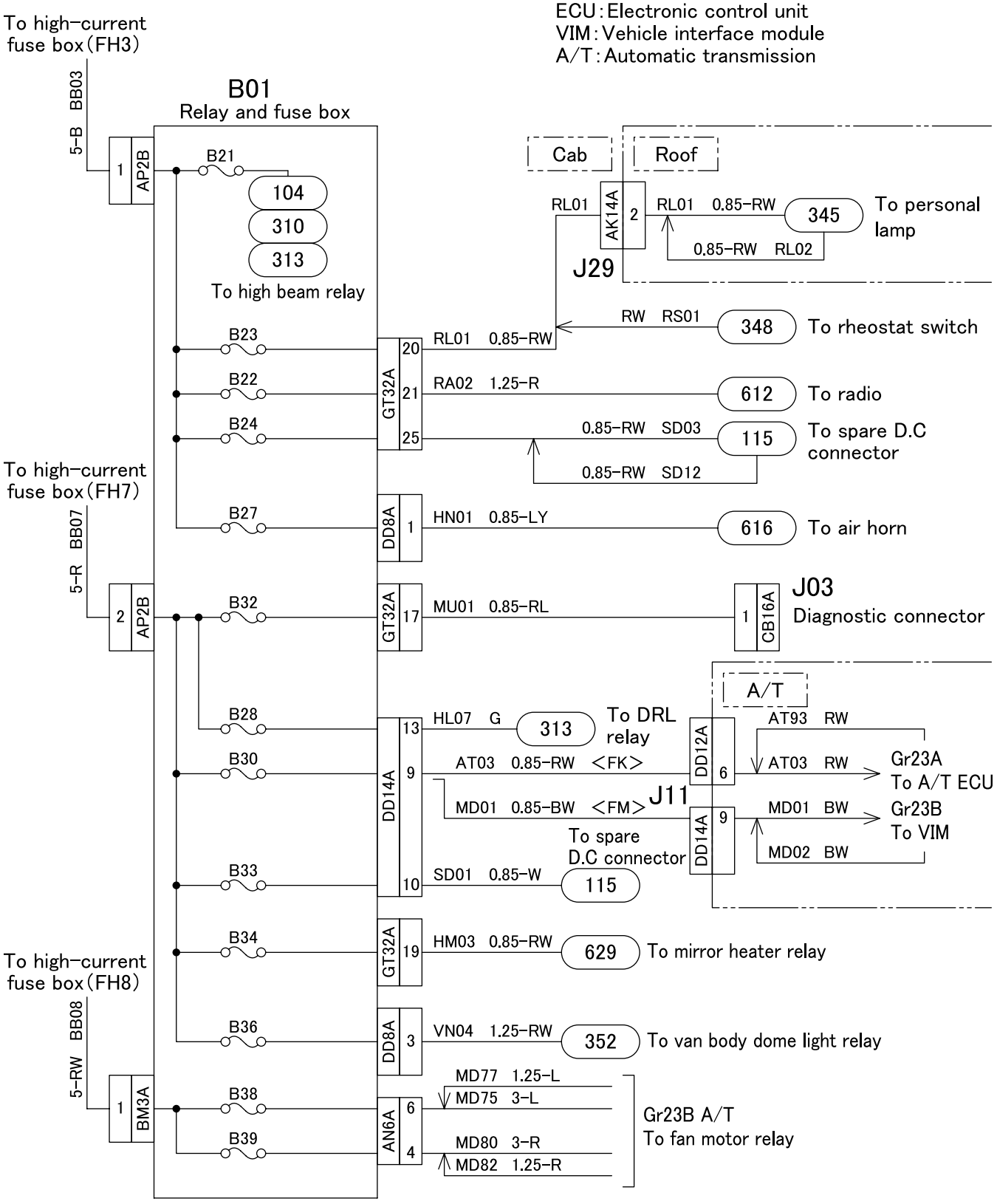

110-C04068

Relay and fuse box
(Fuse M01 to M08)

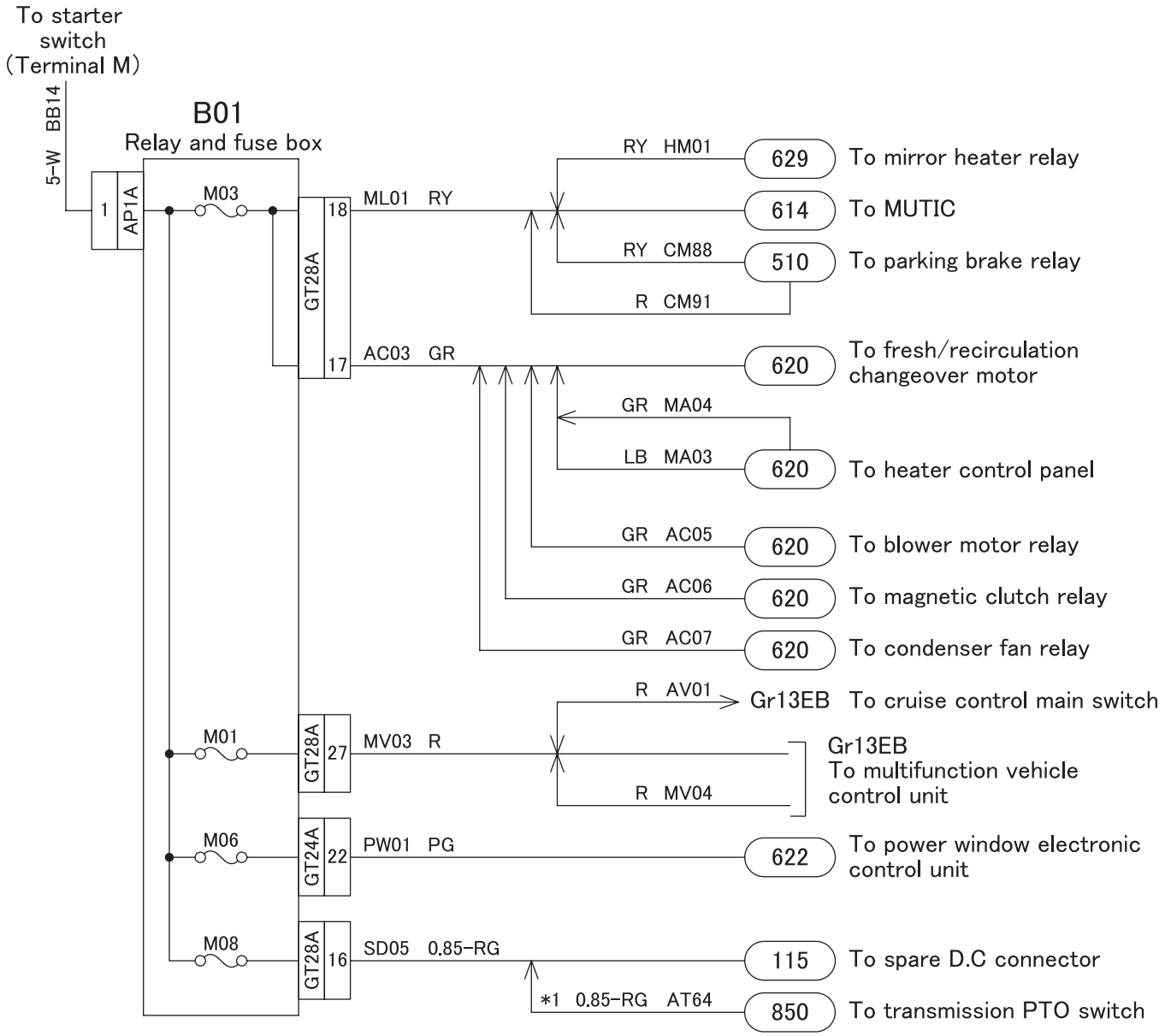

MUTIC : Multipurpose timing control unit
PTO : Power take-off

*1 : Automatic transmission

110-C04931

Relay and fuse box
(Fuse M10 to M14)

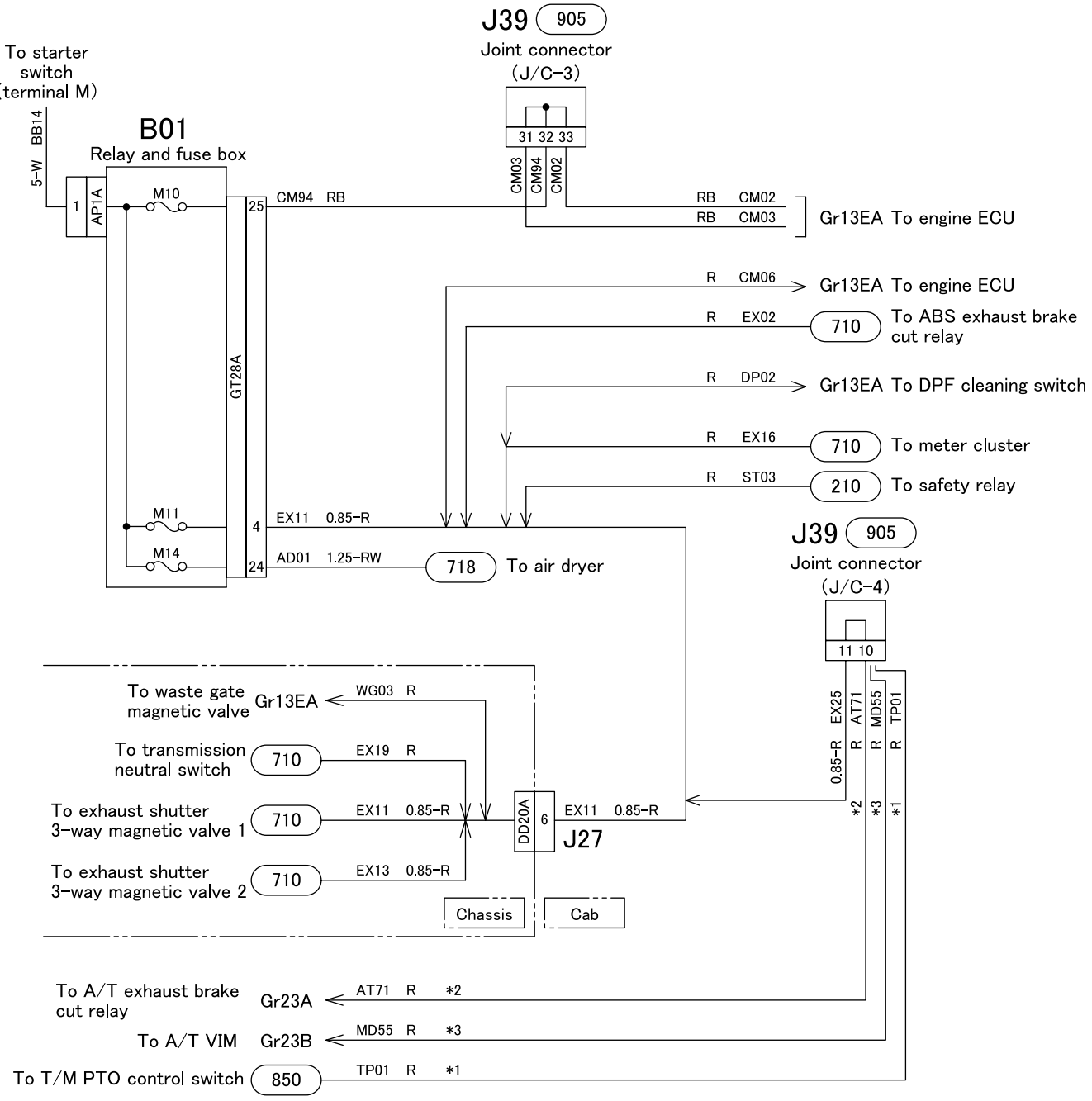

＊1 : Manual transmission
＊2 : Automatic transmission＜FK＞
＊3 : Automatic transmission＜FM＞

ECU : Electronic control unit
VIM : Vehicle interface module
DPF : Diesel particulate filter
ABS : Anti-lock brake system
PTO : Power take-off
T/M : Transmission

Relay and fuse box
(Fuse M15)

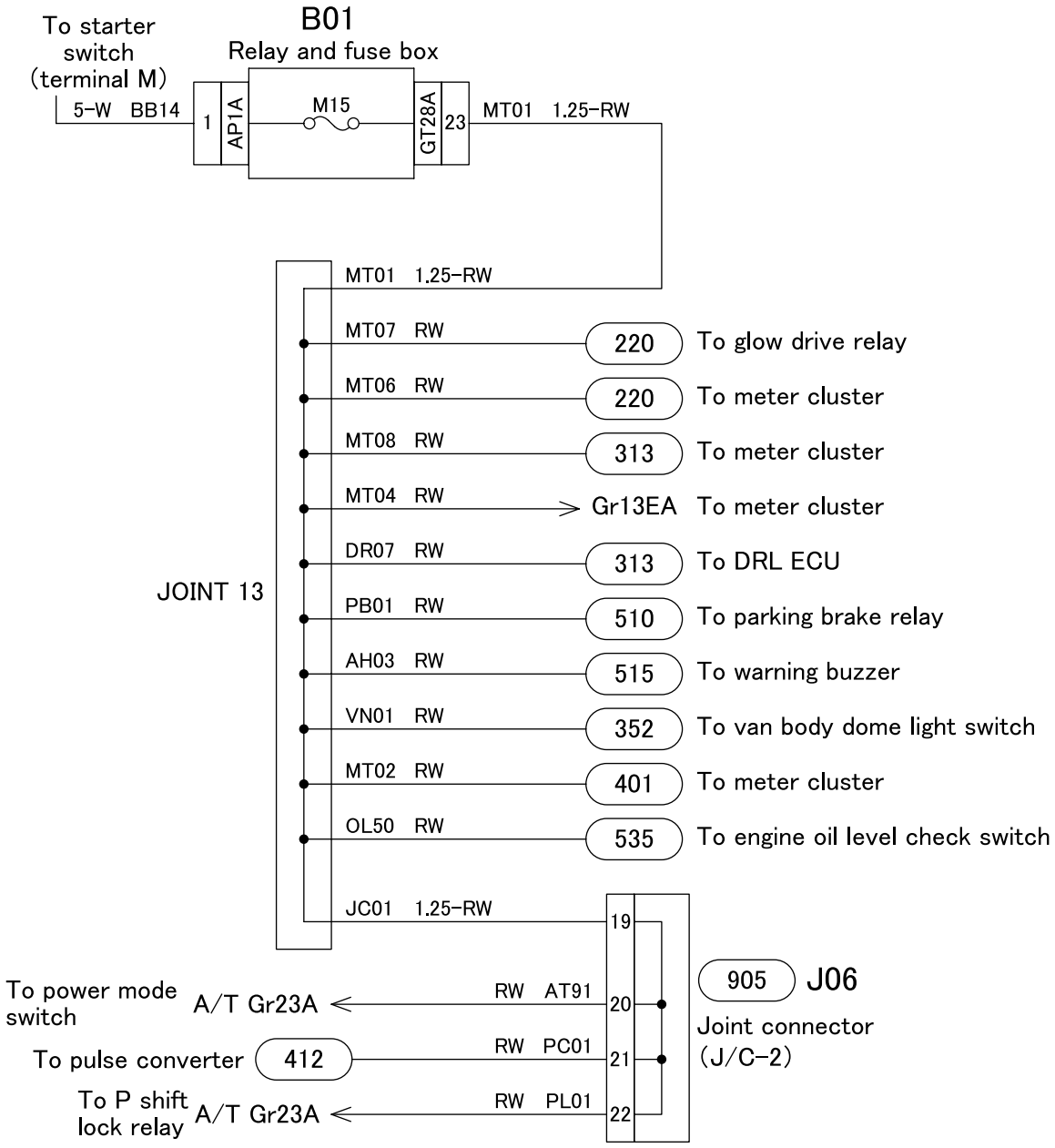

DRL : Daytime running light
ECU : Electronic control unit
A/T : Automatic transmission

110-C04071

Relay and fuse box
(Fuse M16 to M20)

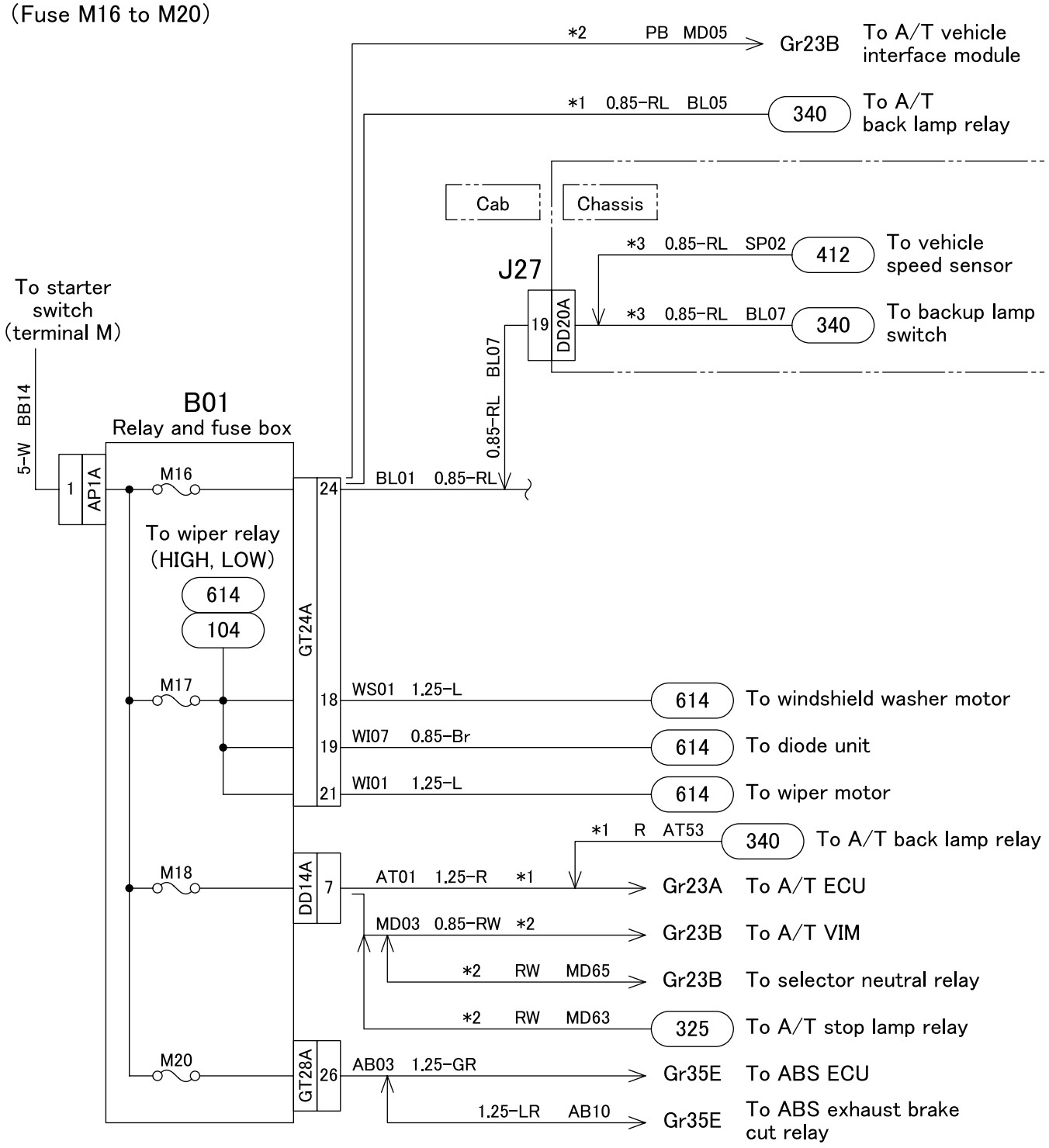

VIM : Vehicle interface module
ABS : Anti-lock brake system
A/T : Automatic transmission
ECU : Electronic control unit

＊1 : A/T＜FK＞
＊2 : A/T＜FM＞
＊3 : Manual transmission

110-C04072

Relay and fuse box
(Fuse S01)

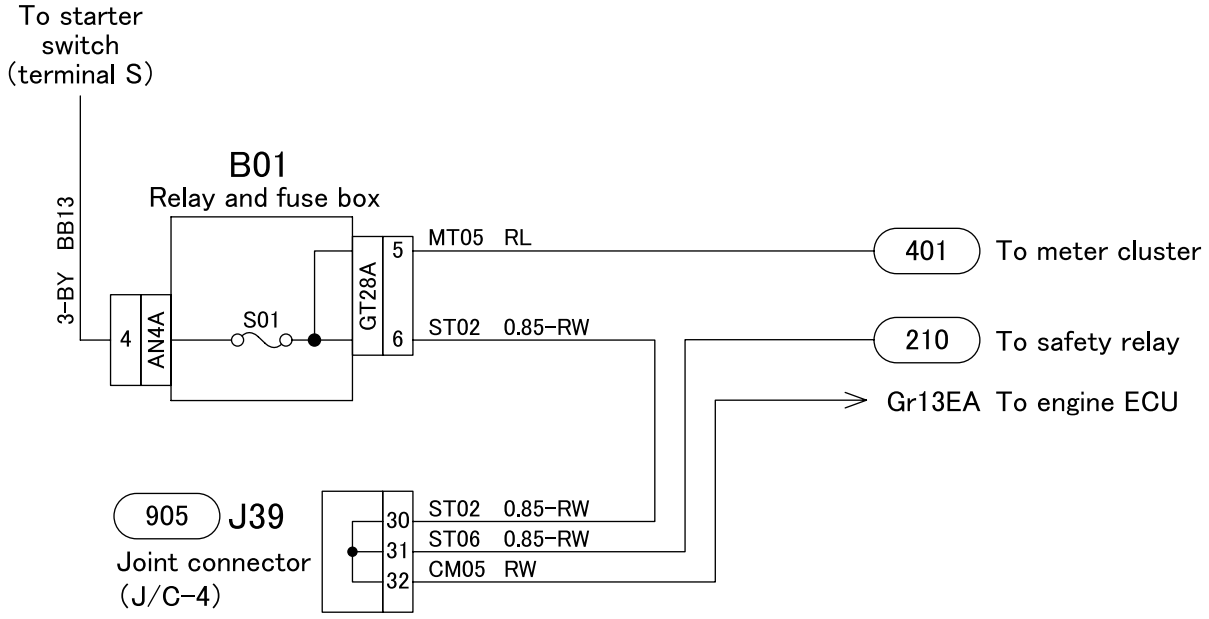

ECU : Electronic control unit

110-C04073

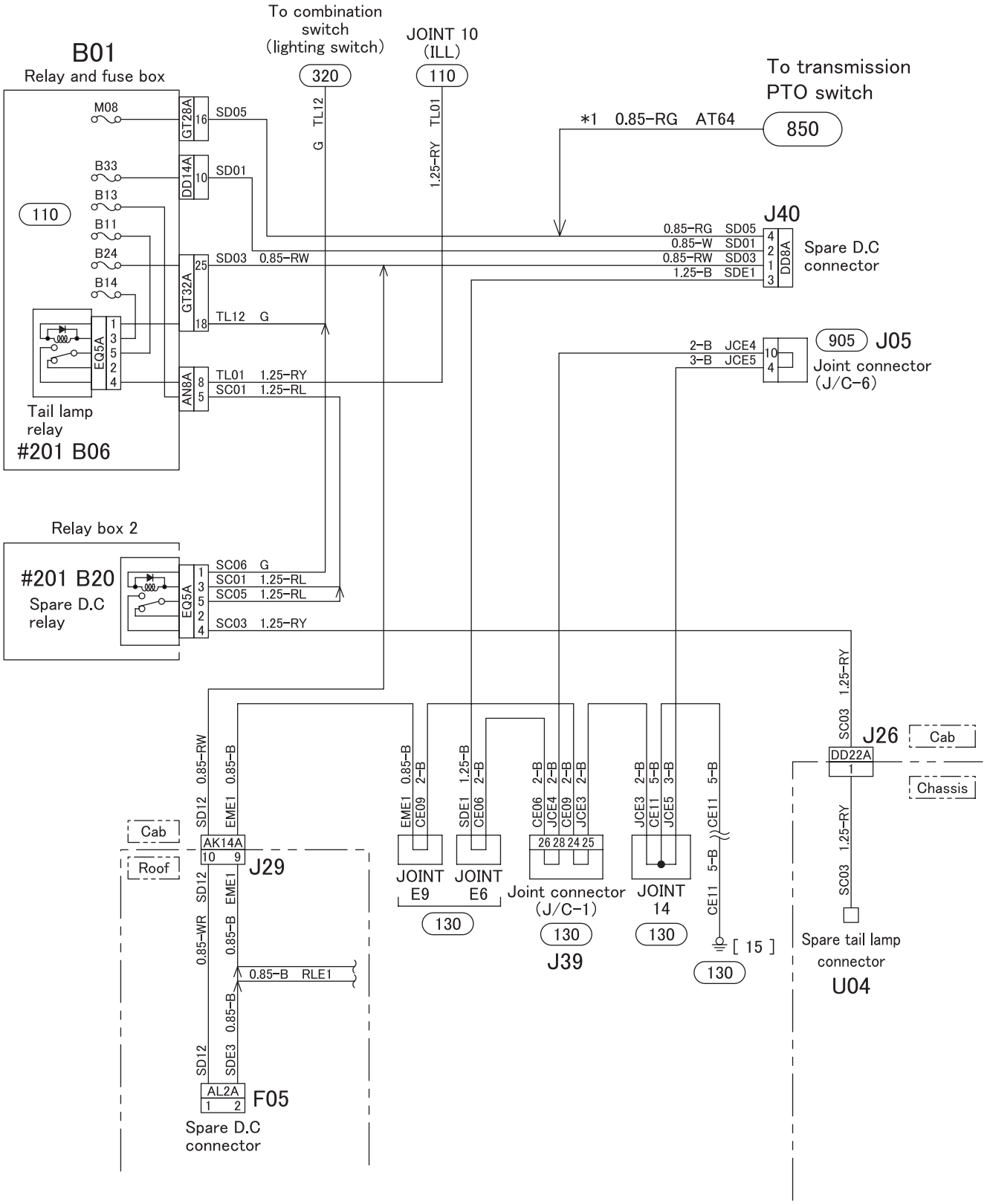

PTO : Power take-off

*1 : Automatic transmission

125 BATTERY CHARGING CIRCUIT

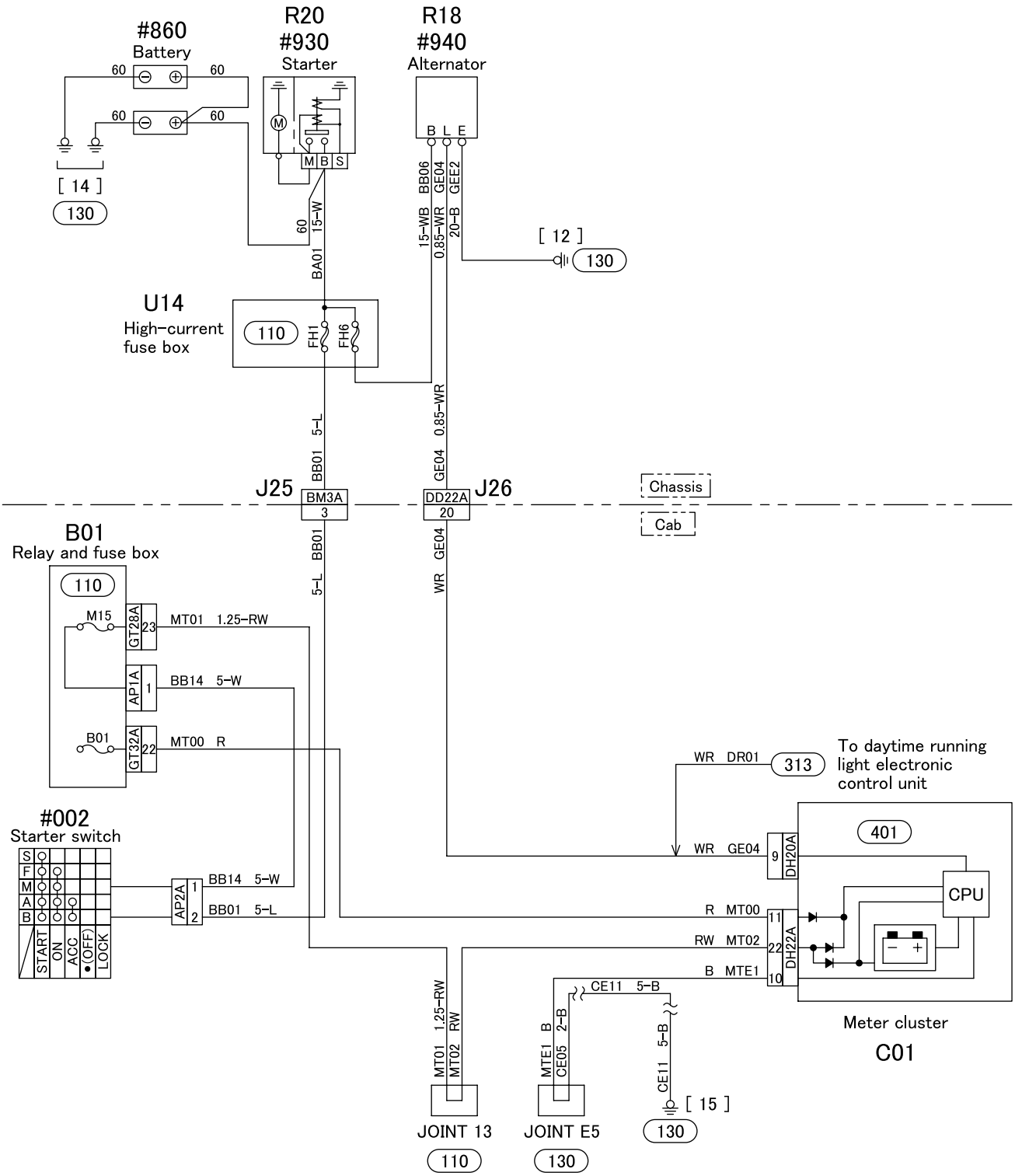

125-C04075

M E M O

[1] to [18] <FK>

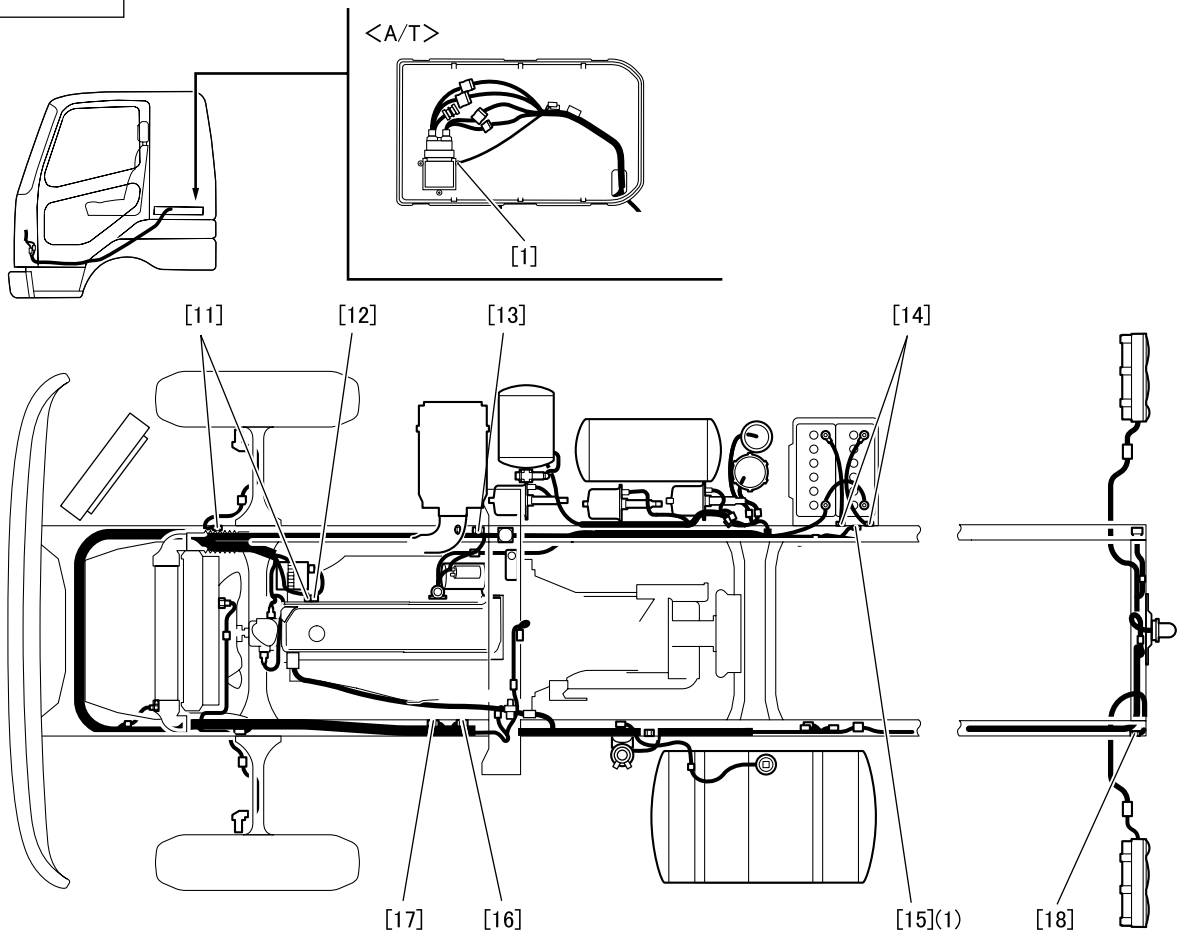

Location	Circuit No.	Wire diameter –wire color	Destination	Remarks
[1]	ATE0	B	A/T ECU	A/T ECU case ground <FK (A/T)>
[11]	GEE2	20–BL	Alternator	Alternator ground
[12]	–	20–B	Alternator	Alternator ground
[13]	–	60	Engine	Engine ground
[14]	–	60	Battery	Battery ground
[15](1)	ABE3	2–B	ABS ECU	
	CE10	2–B	Joint connector (J/C–6)	
	CE11	5–B	JOINT (14)	
[16]	CME3	1.25–B	Engine ECU	
	CME4	1.25–B	Engine ECU	
[17]	CME1	1.25–B	Engine ECU	
	CME2	1.25–B	Engine ECU	
	CME5	1.25–B	Engine ECU	
[18]	ASE3	B	Height control 3–way magnetic valve	FK65
	RWE1	B	Parking brake switch	Except FK61
	TLE5	0.85–B	Rear combination lamp, LH	
	TLE6	0.85–B	Rear combination lamp, RH	

ABS : Anti–lock brake system
ECU : Electronic control unit
A/T : Automatic transmission

L02512

[11] to [19] <FM>

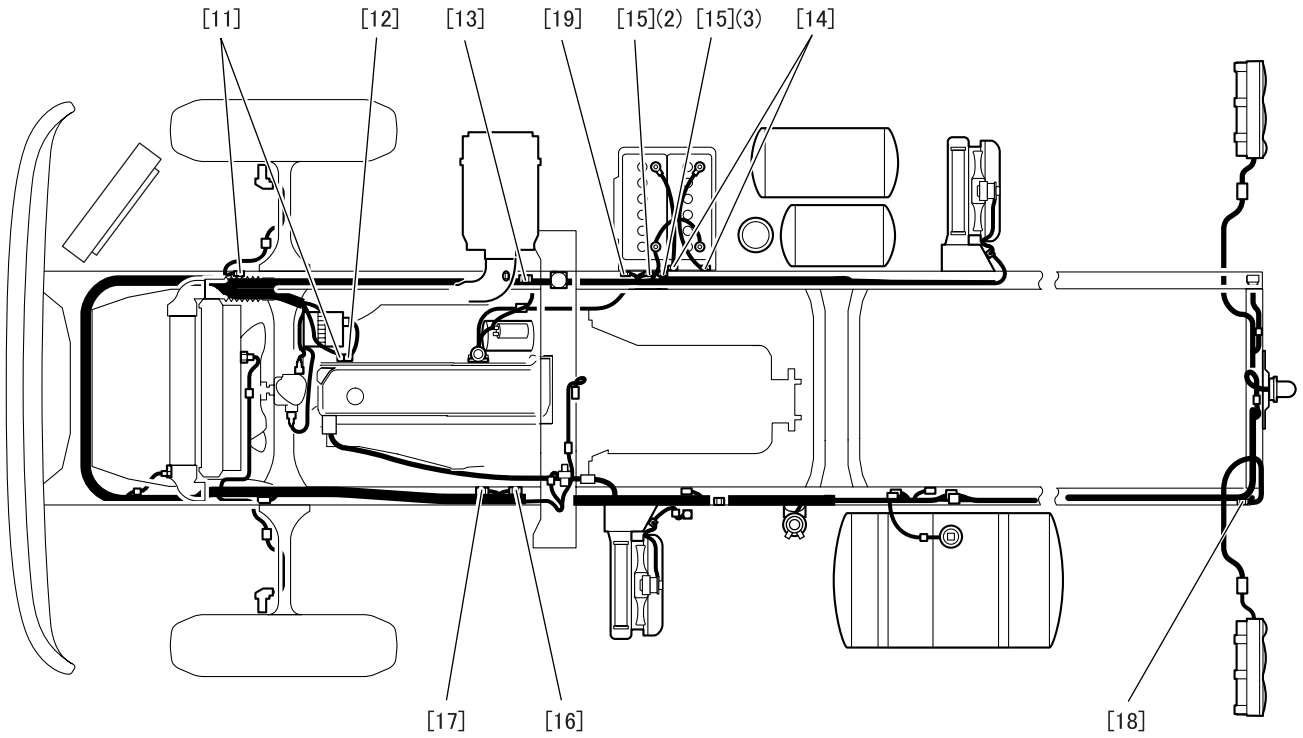

Location	Circuit No.	Wire diameter –wire color	Destination	Remarks
[11]	GEE2	20–BL	Alternator	Alternator ground
[12]	–	20–B	Alternator	Alternator ground
[13]	–	60	Engine	Engine ground
[14]	–	60	Battery	Battery ground
[15](2)	CE11	5–B	JOINT (14)	
[15](3)	ABE3	2–B	ABS ECU	
	CE10	2–B	Joint connector (J/C–6)	
[16]	CME3	1.25–B	Engine ECU	
	CME4	1.25–B	Engine ECU	
	MDE5	3–B	Motor 1	A/T
[17]	CME1	1.25–B	Engine ECU	
	CME2	1.25–B	Engine ECU	
	CME5	1.25–B	Engine ECU	
[18]	RWE1	B	Parking brake switch	
	TLE5	0.85–B	Rear combination lamp, LH	
	TLE6	0.85–B	Rear combination lamp, RH	
[19]	MDE7	3–B	Motor 2	A/T

ABS : Anti–lock brake system
ECU : Electronic control unit
A/T : Automatic transmission

L02513

Entire ground

- This diagram indicates grounding points.
- See the following pages for branching of grounding (wiring for ☆) (in circuit No. order).

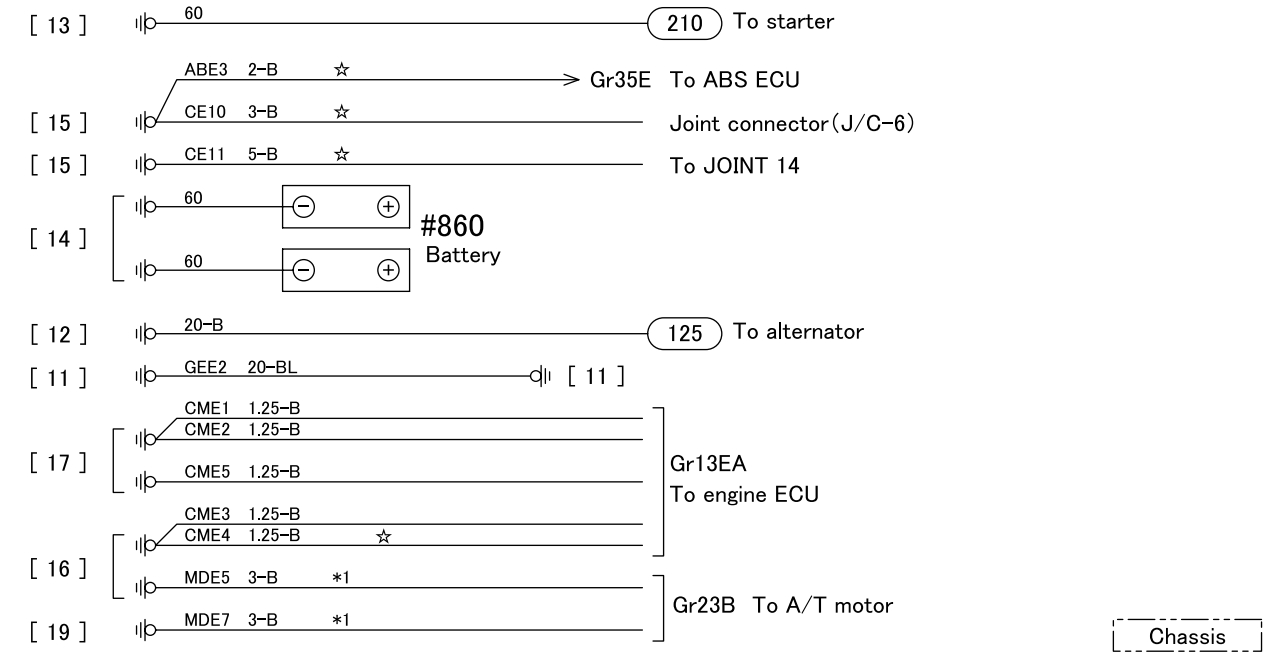

*1: A/T<FM>
*2: Wheel parking brake
*3: Air suspention
*4: A/T<FK>

ABS: Anti-lock brake system
ECU: Electronic control unit
A/T: Automatic transmission

130-C04076

Circuit No. ABE3 chassis ground
＜ABS＞

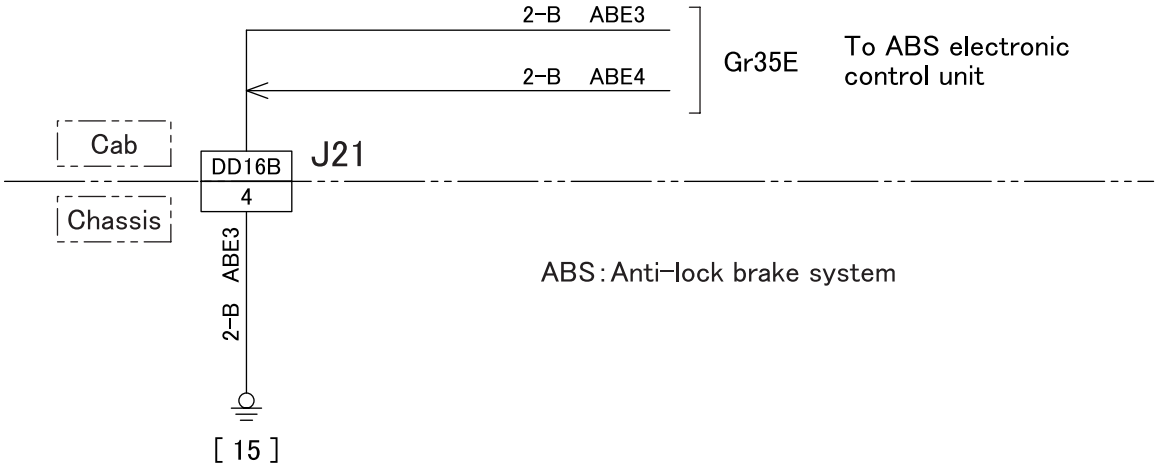

Circuit No. CE10 chassis ground
＜Main ground＞

A/T: Automatic transmission
T/M: Transmission
PTO: Power take-off
ABS: Anti-lock brake system
ECU: Electronic control unit

＊1: A/T＜FK＞
＊2: A/T＜FM＞

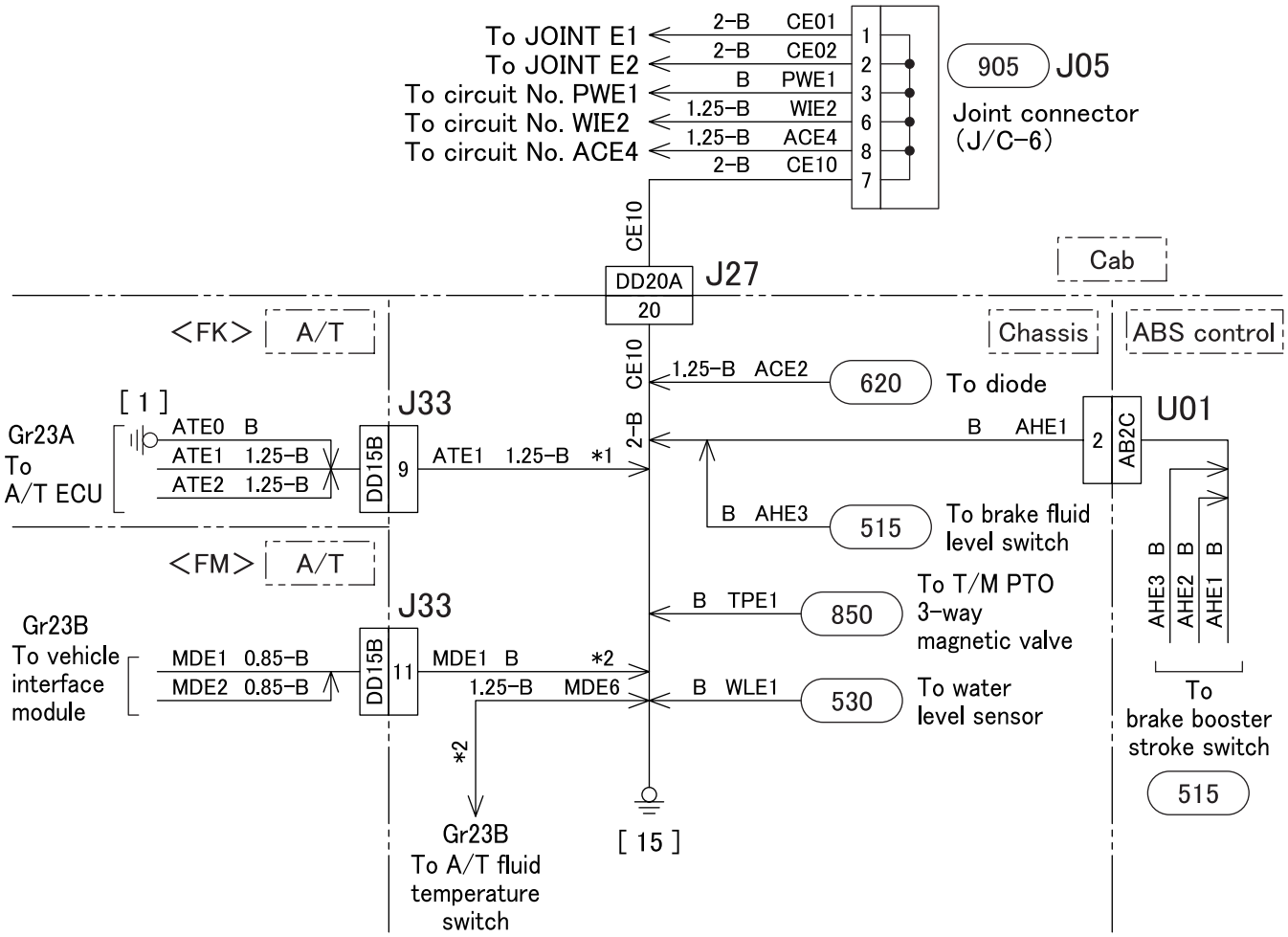

130-C04078

Circuit No. CE10 chassis ground
＜Circuit No. ACE4＞

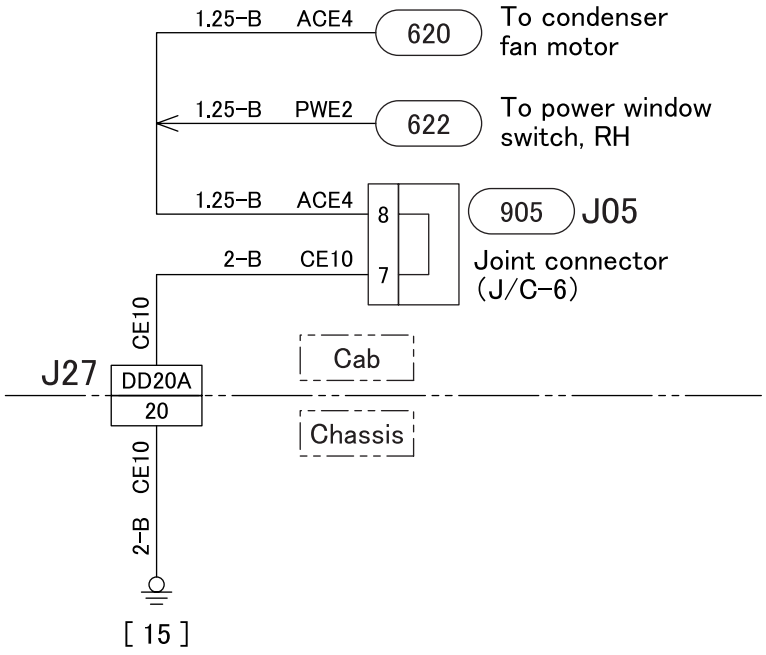

Circuit No. CE10 chassis ground
＜JOINT E1＞

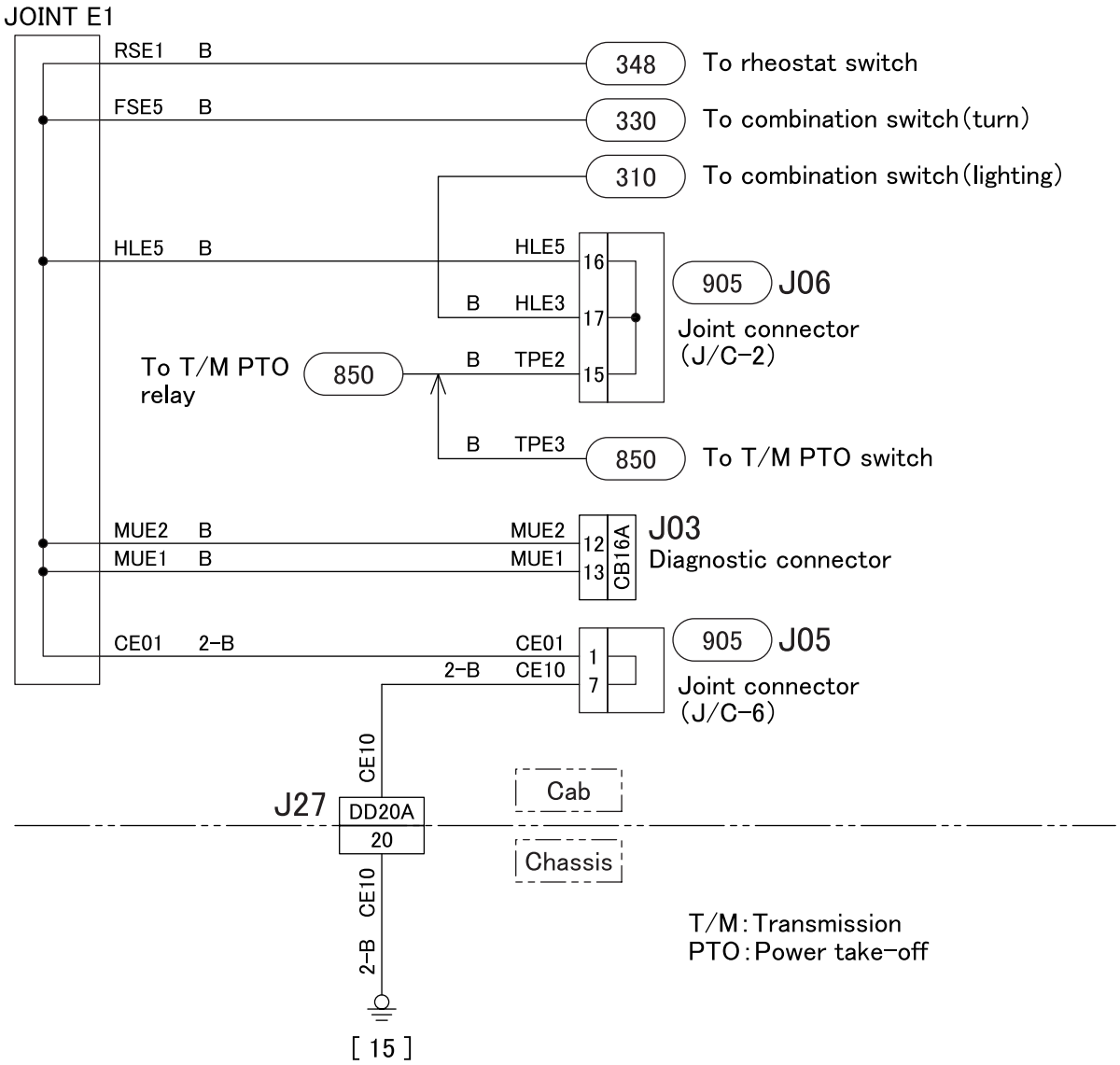

130-C04080

Circuit No. CE10 chassis ground
＜JOINT E2＞

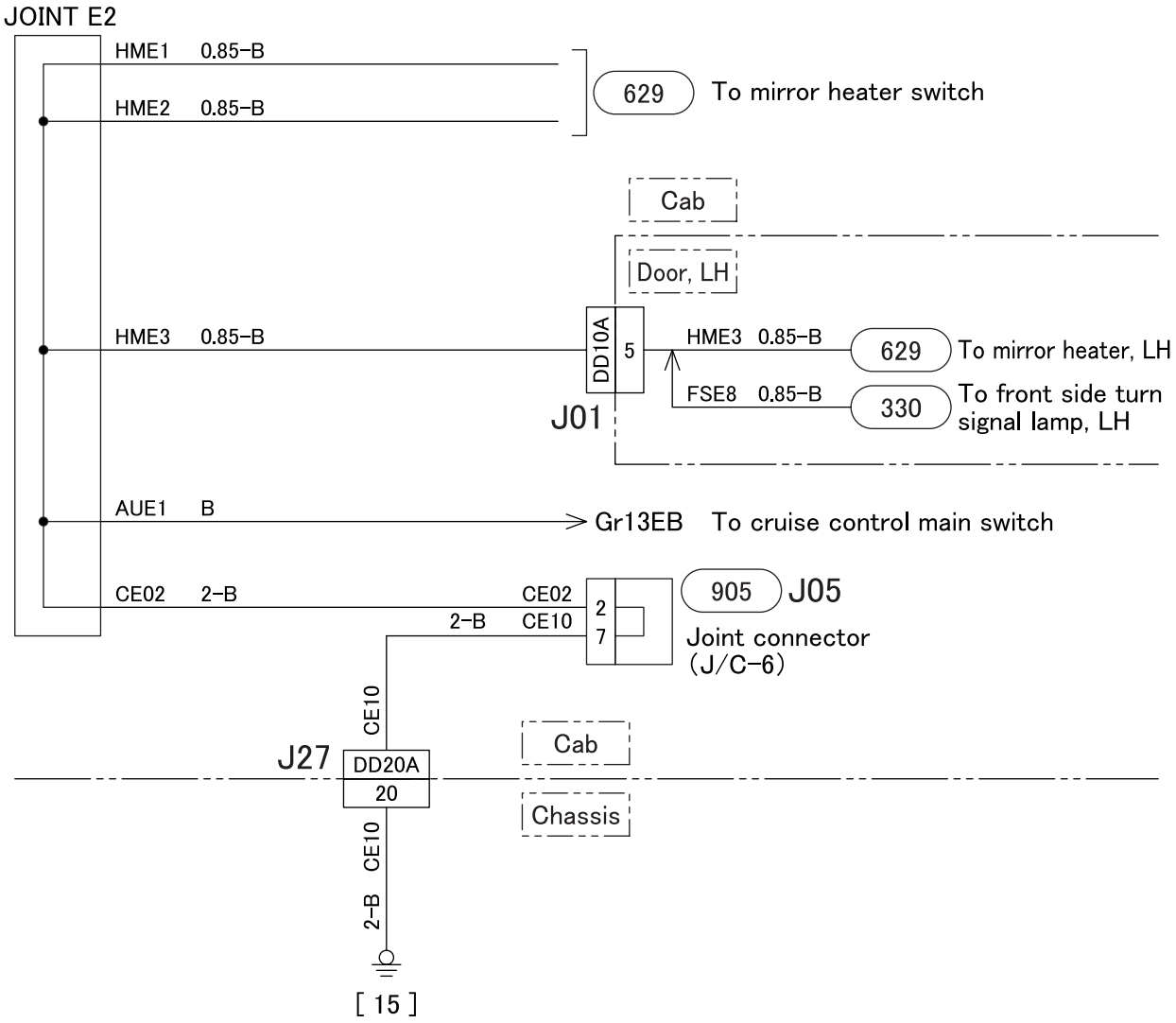

Circuit No. CE10 chassis ground
＜Circuit No. PWE1＞

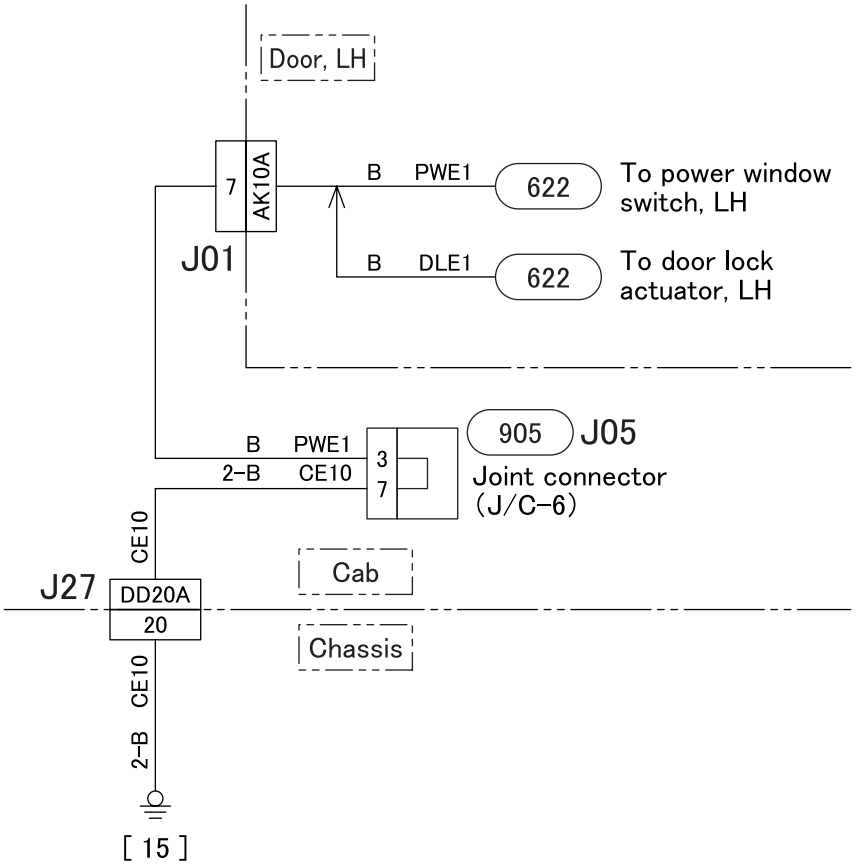

130-C04082

Circuit No. CE10 chassis ground
＜Circuit No. WIE2＞

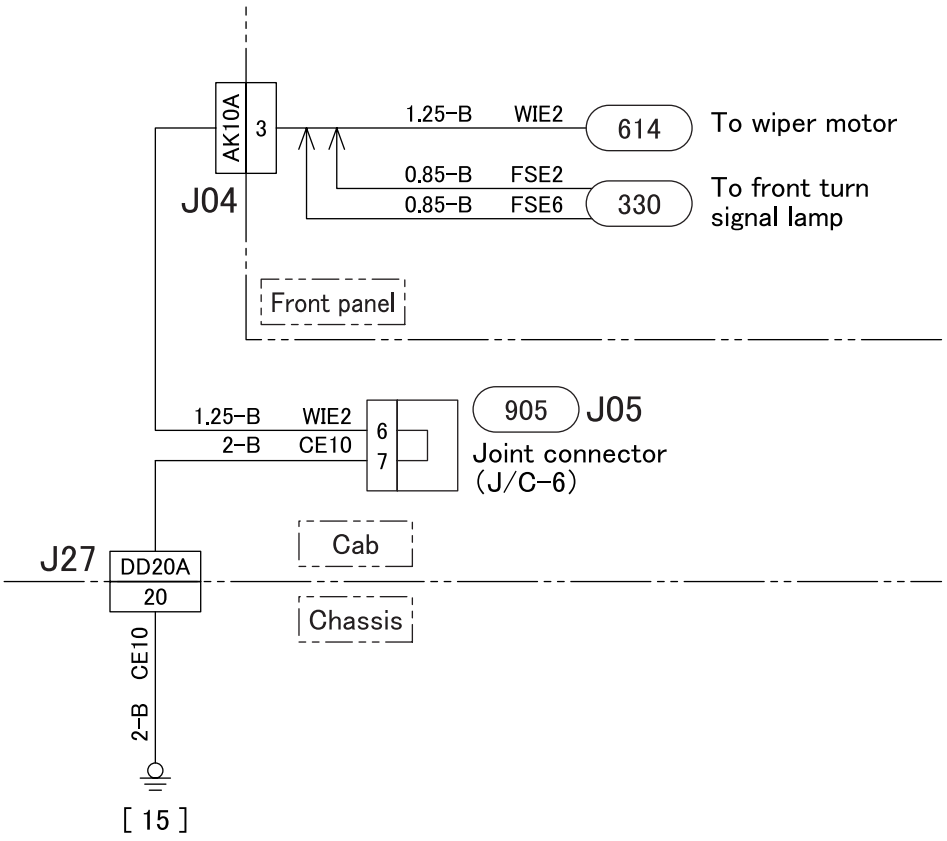

Circuit No. CE11 chassis ground
＜Main ground＞

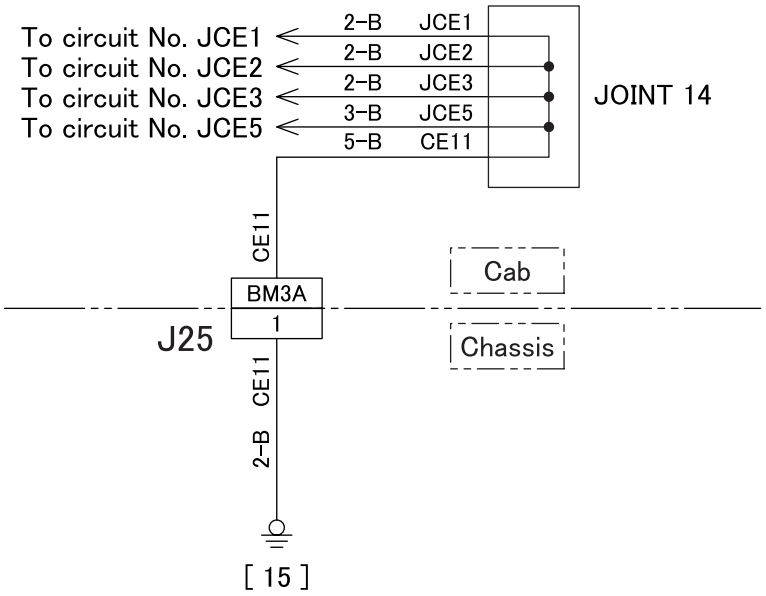

130-C04084

Circuit No. CE11 chassis ground
＜Circuit No. JCE1＞
＜JOINT E5＞

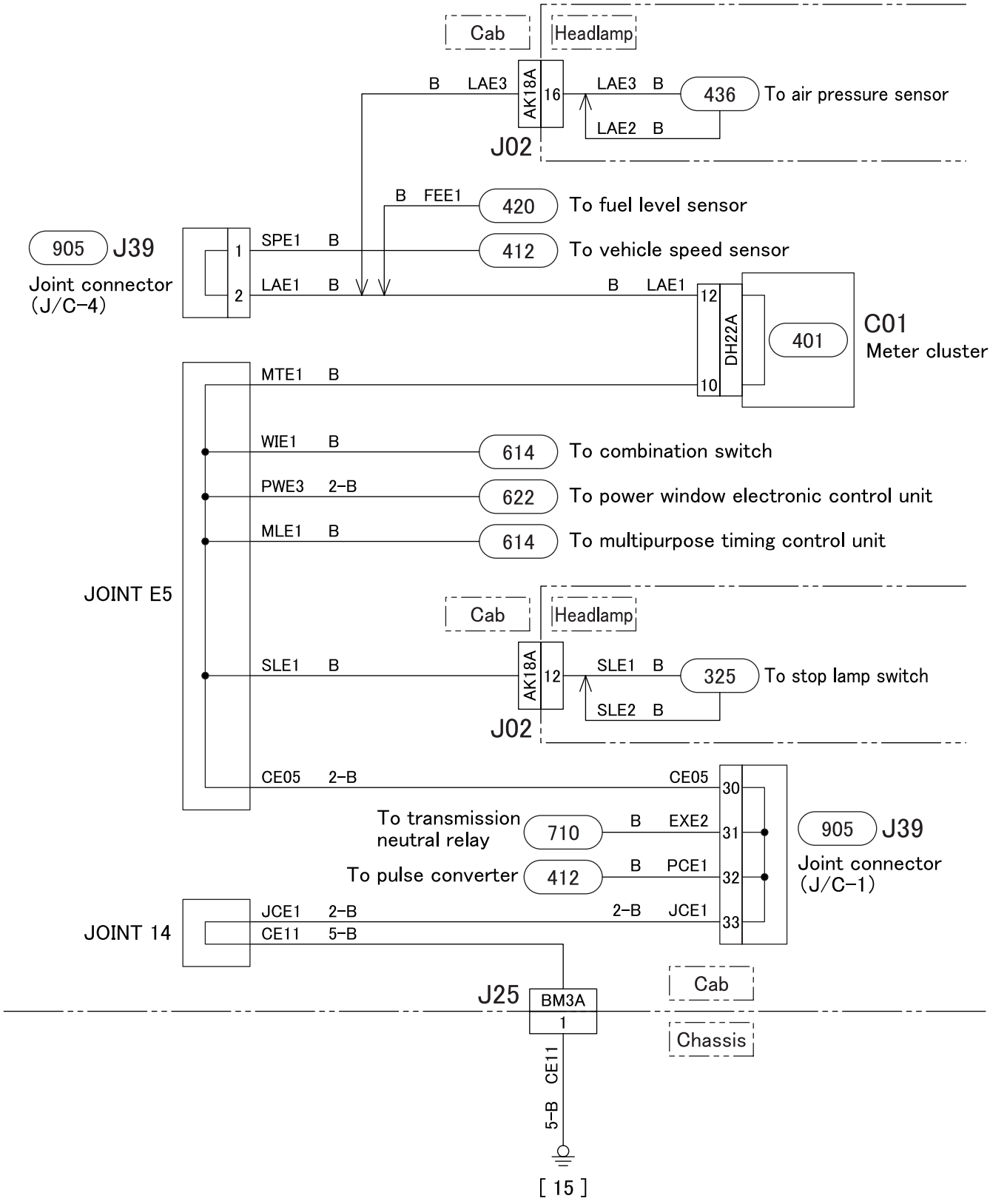

130-C04085

Circuit No. CE11 chassis ground
＜Circuit No. JCE2＞
＜JOINT E6, JOINT E7＞

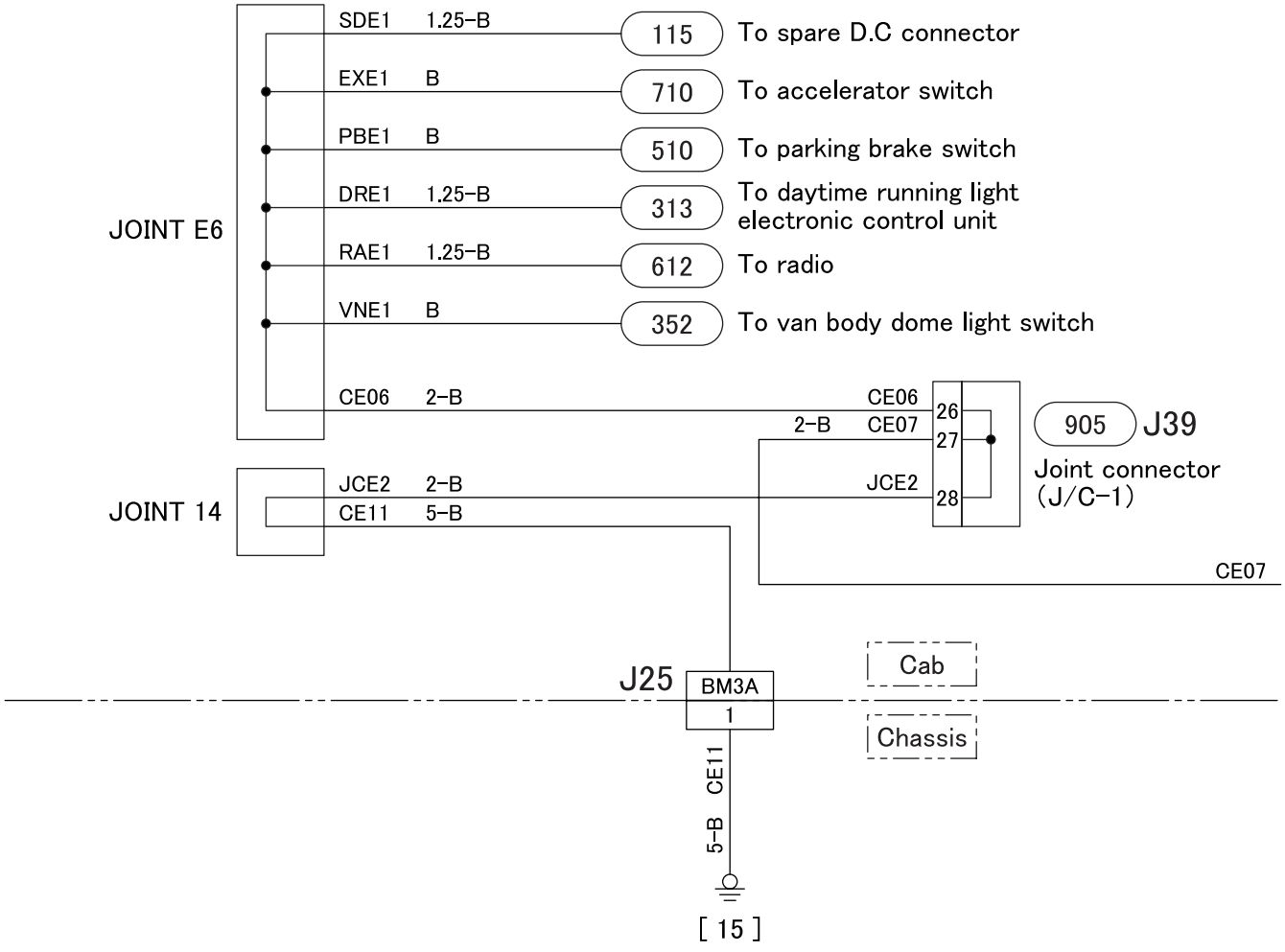

130-C04086-1

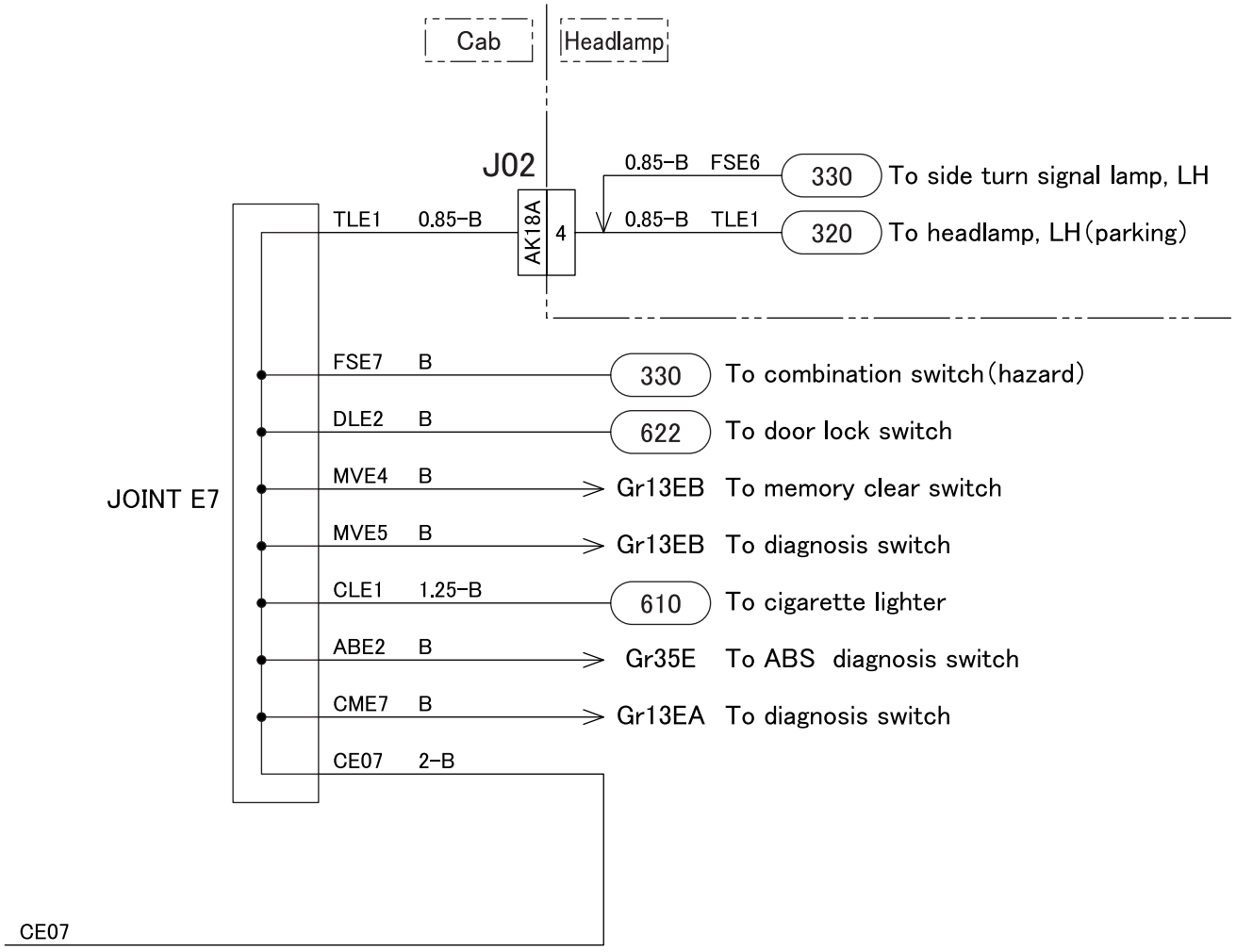

ABS : Anti-lock brake system

130-C04086-2

Circuit No. CE11 chassis ground
＜Circuit No. JCE3＞
＜JOINT E8, JOINT E9＞

＊1 : Manual transmission
＊2 : Automatic transmission

DRL : Daytime running light

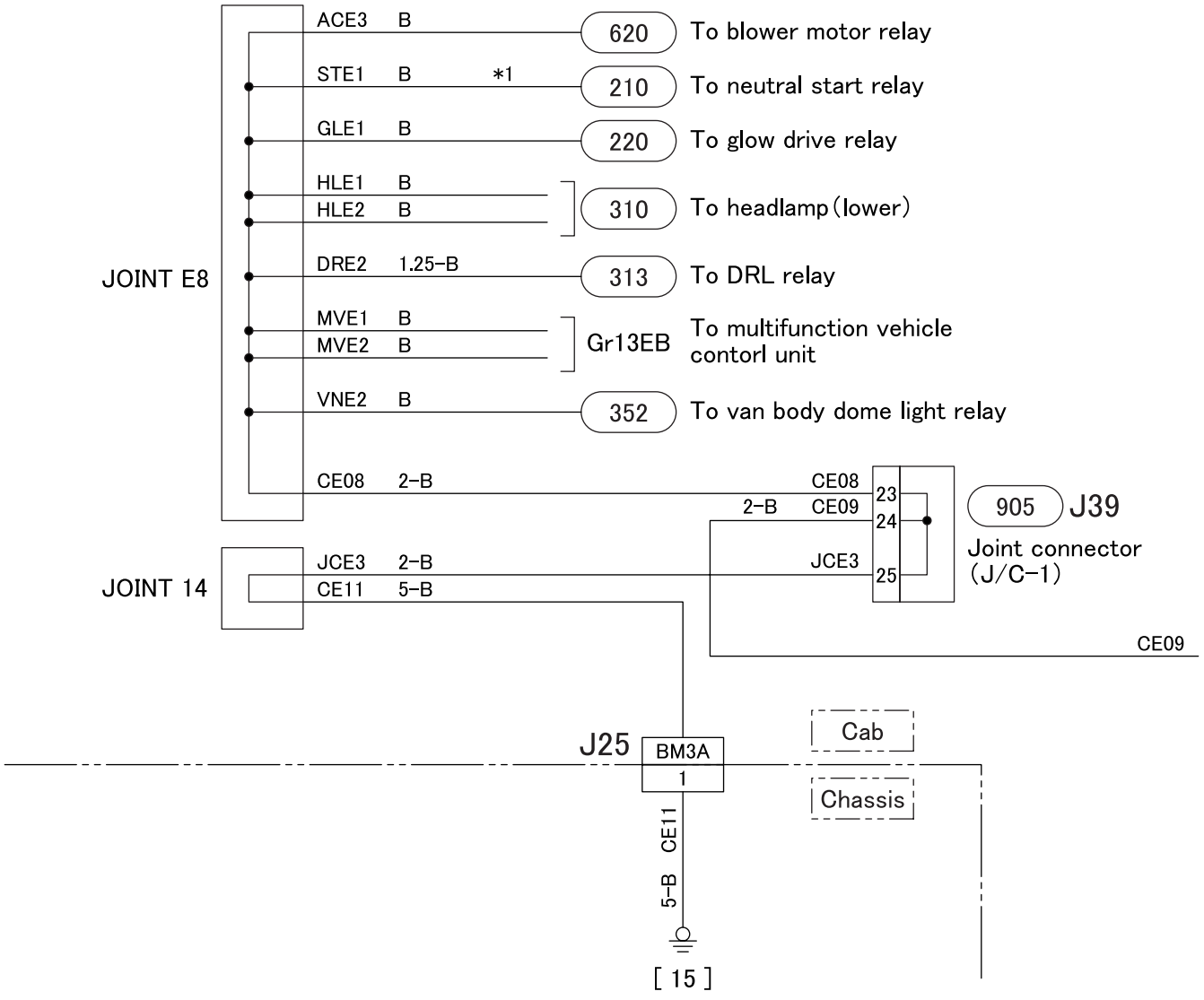

130-C04087-1

EDU: Electronic drive unit
EGR: Exhaust gas recirculation

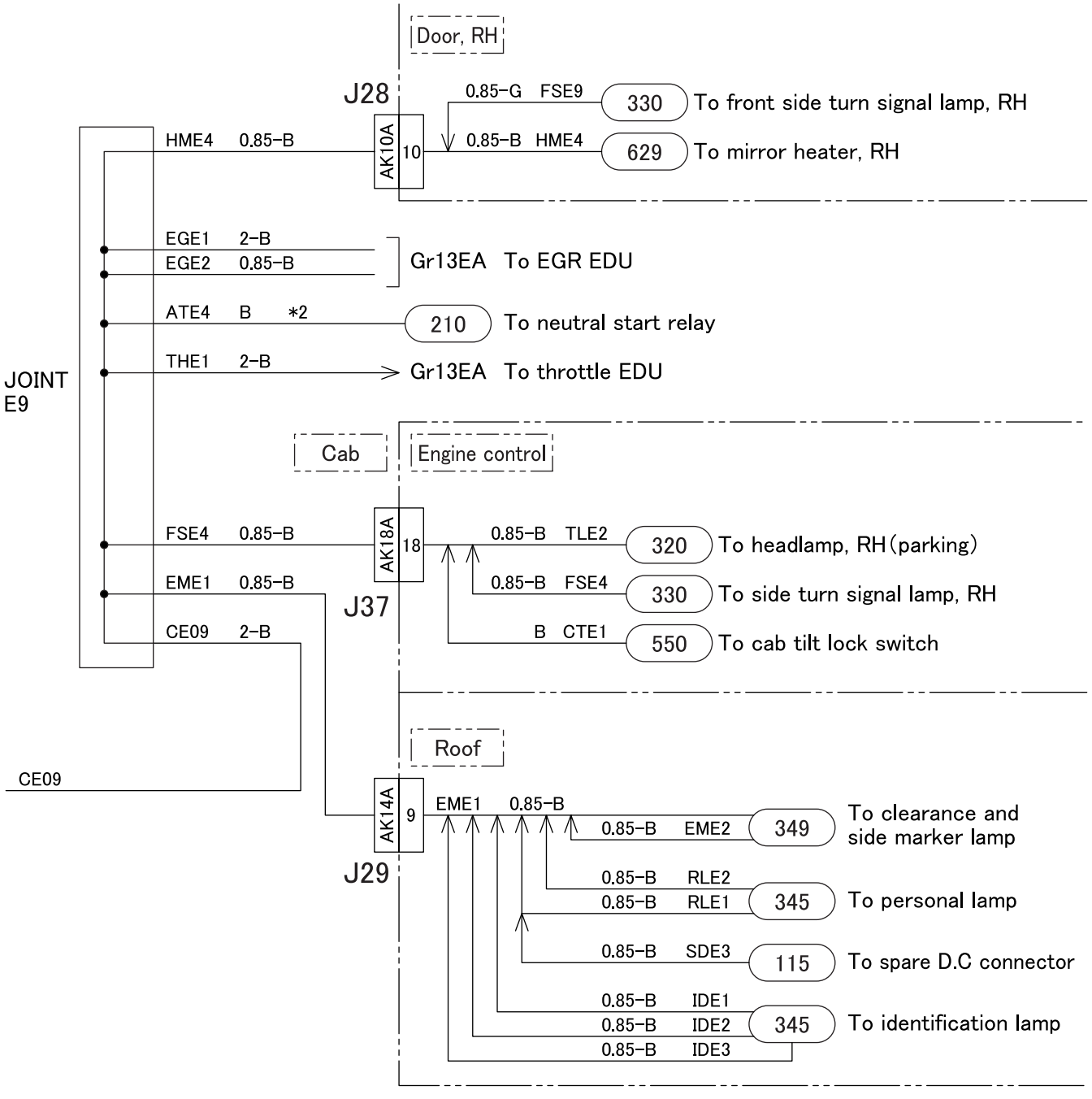

130-C04087-2

Circuit No. CE11 chassis ground
＜Circuit No. JCE5＞
＜JOINT E3＞

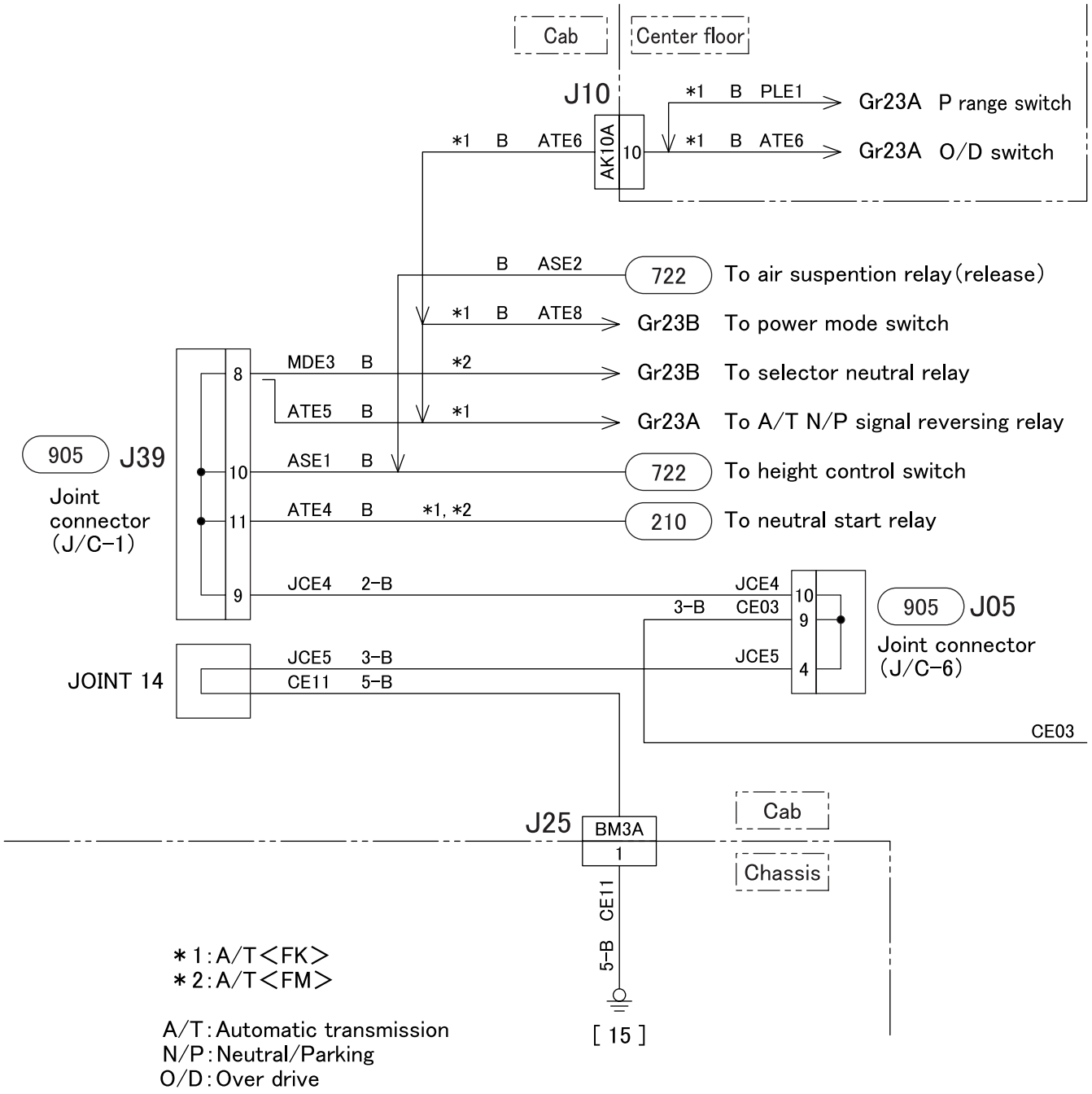

130-C04088-1

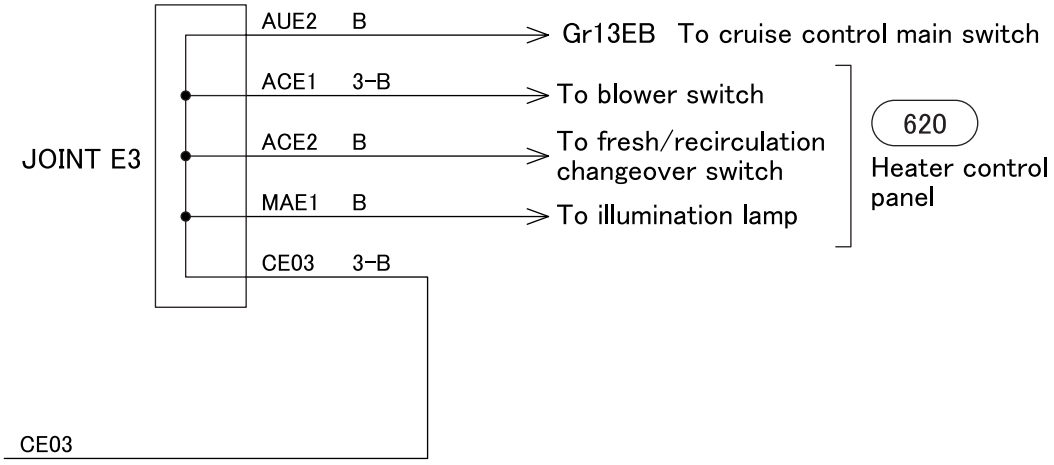
JOINT E3
AUE2 B
Gr13EB To cruise control main switch
ACE1 3-B
To blower switch
ACE2 B
To fresh/recirculation changeover switch
MAE1 B
To illumination lamp
620
Heater control panel
CE03 3-B
CE03

Circuit No. CME4 chassis ground

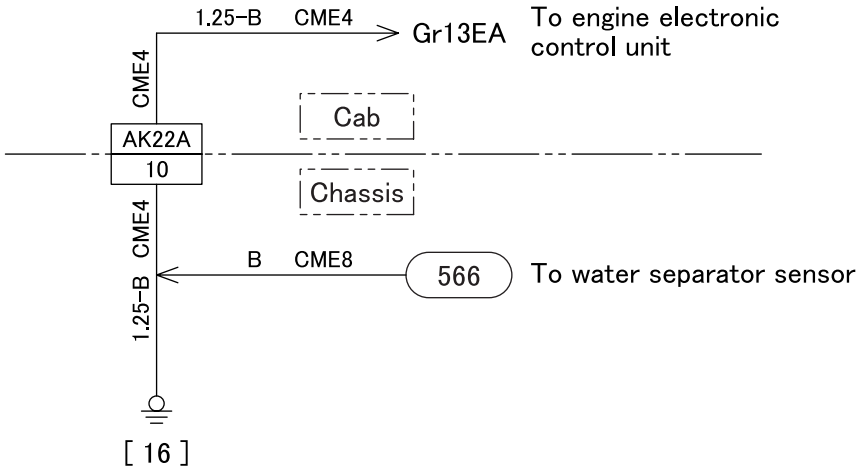

130-C04089

Circuit No. TLE5 rear chassis ground

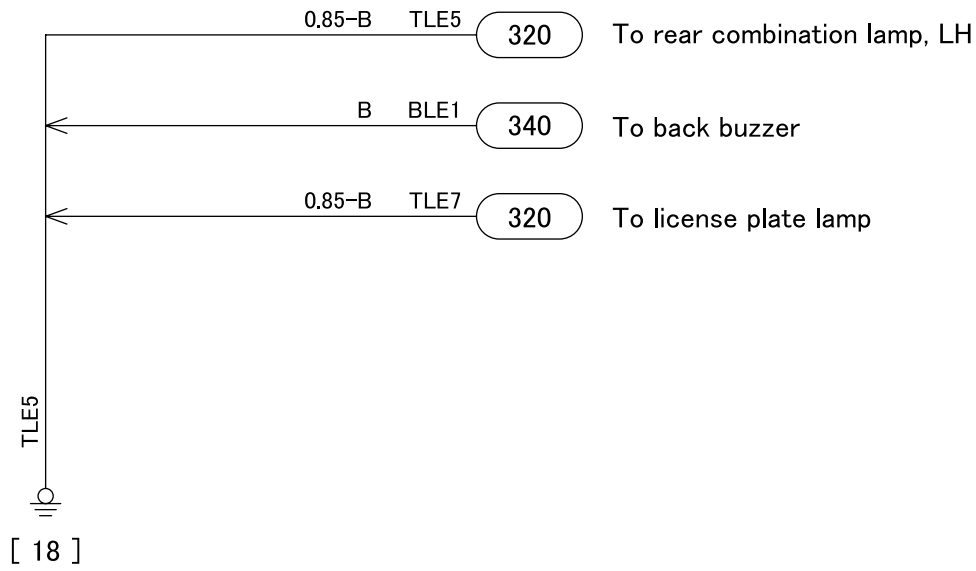

54-02 STARTING AND PREHEATING CIRCUIT

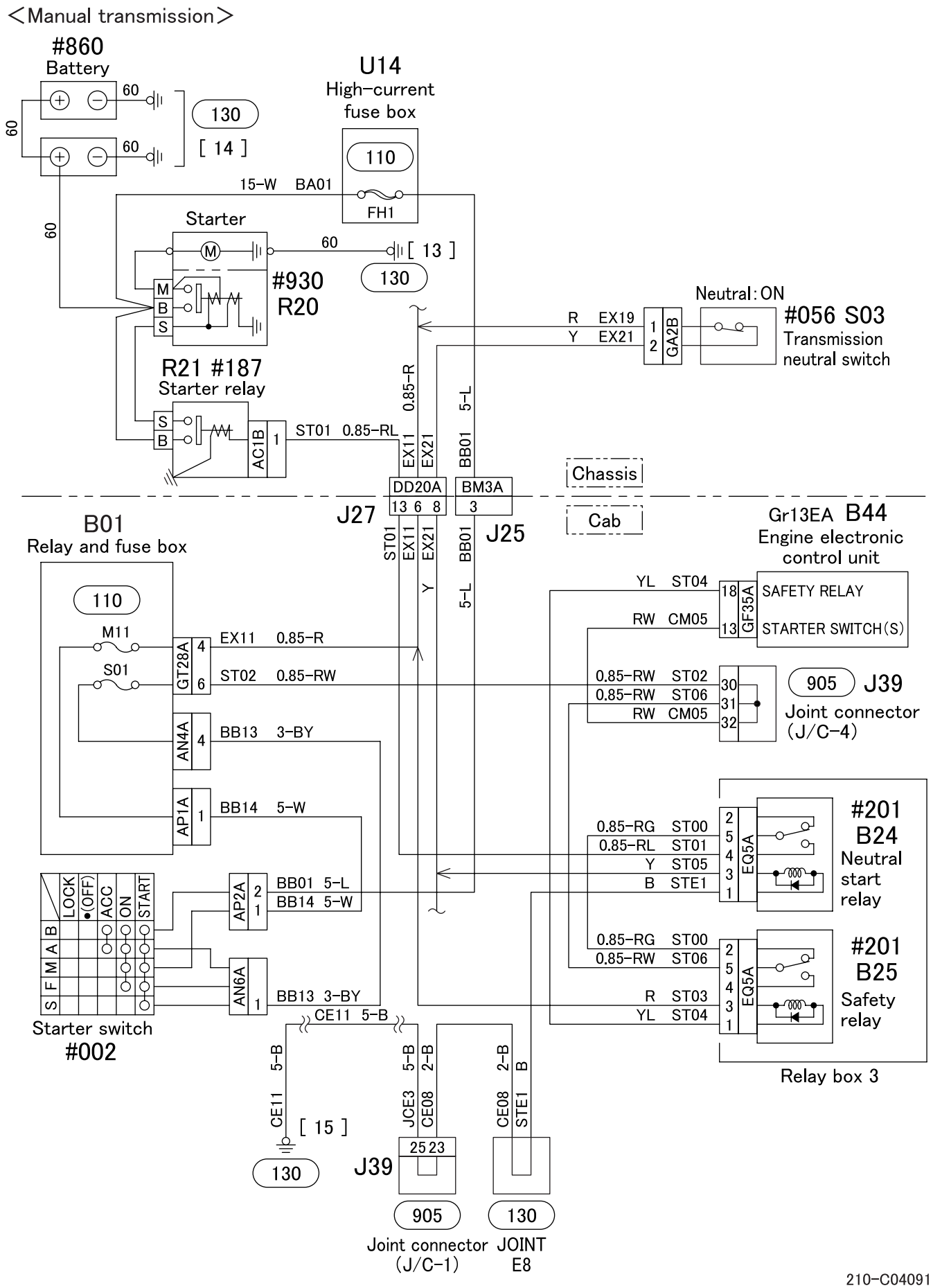
<Manual transmission>
#860
Battery
60
60
60
130
[14]
U14
High-current
fuse box
110
15-W BA01
FH1
Starter
60
[13]
130
#930
R20
M
B
S
R21 #187
Starter relay
S
B
AC1B
1
ST01 0.85-RL
0.85-R
EX11
EX21
BB01 5-L
Neutral: ON
R EX19
Y EX21
1
2
GA2B
#056 S03
Transmission
neutral switch
Chassis
DD20A
13 6 8
BM3A
3
J27
J25
Cab
B01
Relay and fuse box
110
M11
S01
GT28A
4
6
EX11 0.85-R
ST02 0.85-RW
AN4A
4
BB13 3-BY
AP1A
1
BB14 5-W
LOCK
(OFF)
ACC
ON
START
B
A
M
F
S
AP2A
2
1
BB01 5-L
BB14 5-W
AN6A
1
BB13 3-BY
Starter switch
#002
CE11 5-B
CE11 5-B
[15]
130
JCE3 5-B
CE08 2-B
J39
25 23
905
Joint connector
(J/C-1)
CE08 2-B
STE1 B
130
JOINT
E8
Gr13EA B44
Engine electronic
control unit
YL ST04
RW CM05
18
13
GF35A
SAFETY RELAY
STARTER SWITCH(S)
0.85-RW ST02
0.85-RW ST06
RW CM05
30
31
32
905
J39
Joint connector
(J/C-4)
0.85-RG ST00
0.85-RL ST01
Y ST05
B STE1
2
5
4
3
1
EQ5A
#201
B24
Neutral
start
relay
0.85-RG ST00
0.85-RW ST06
R ST03
YL ST04
#201
B25
Safety
relay
Relay box 3

210-C04091

M E M O

＜Automatic transmission (FK)＞

A/T : Automatic transmission
N/P : Neutral/Parking
ECU : Electronic control unit

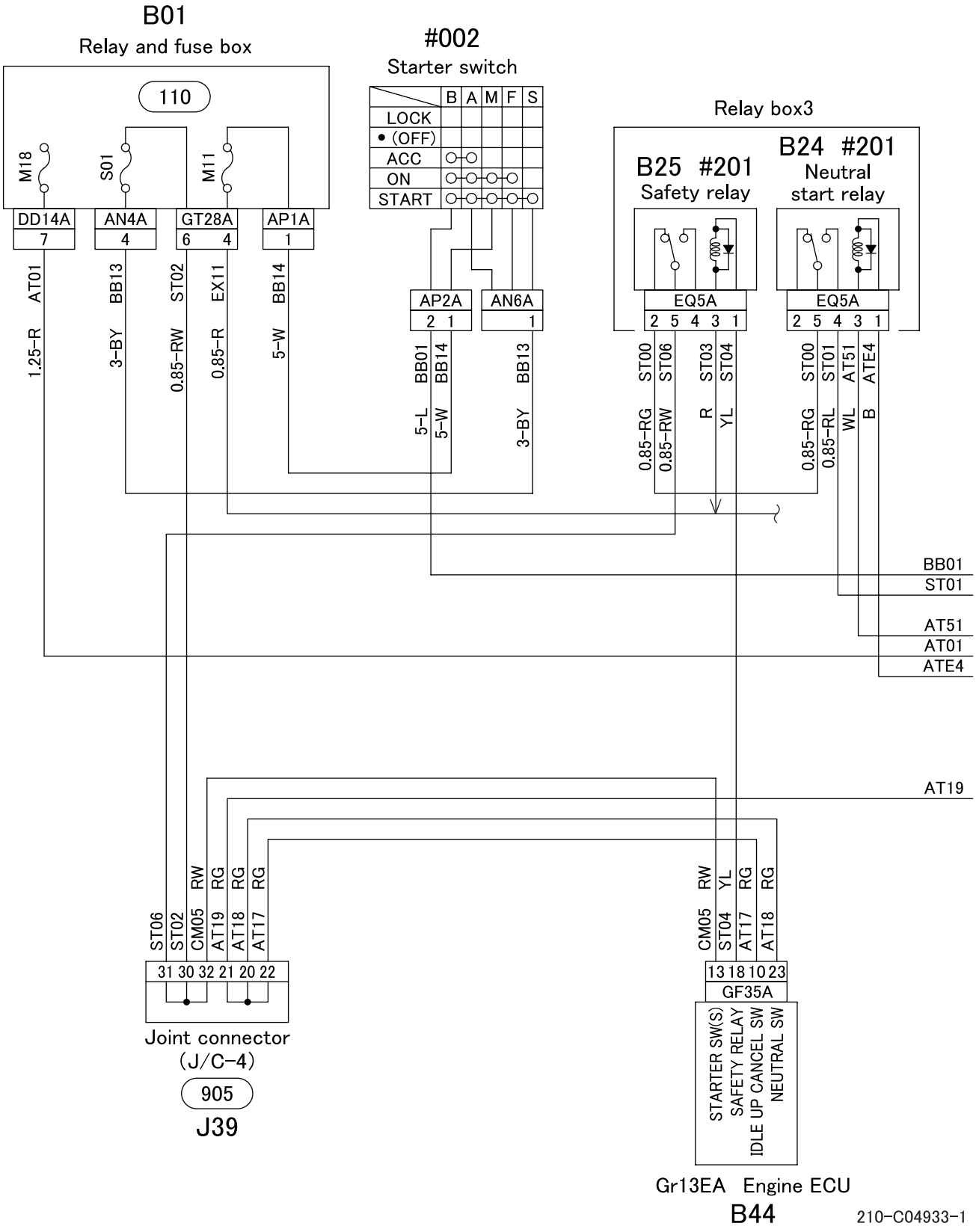

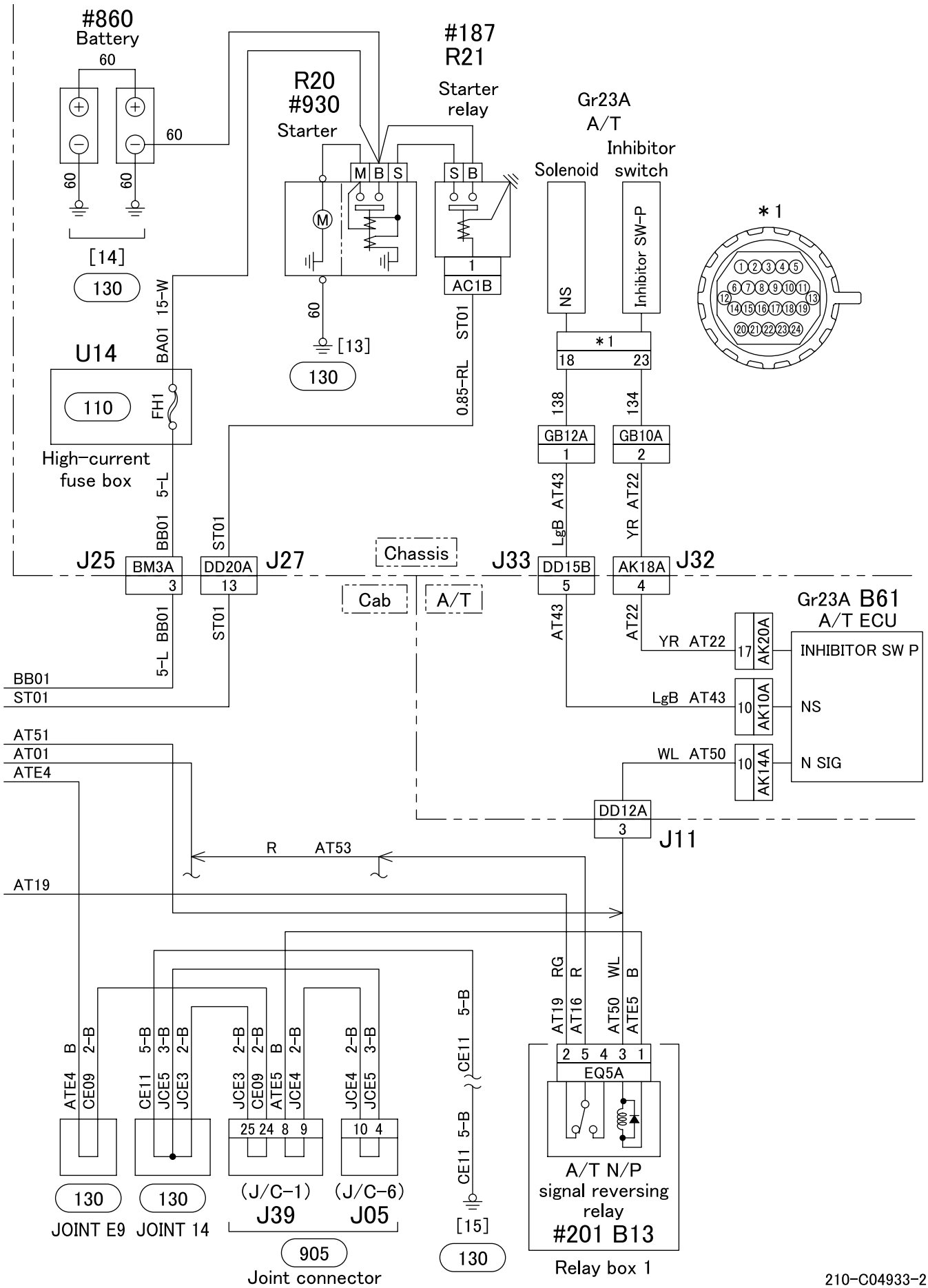
#860
Battery
60
60
60
60
[14]
130
#187
R21
Starter
relay
R20
#930
Starter
M B S
S B
1
AC1B
60
[13]
130
ST01
0.85-RL
Gr23A
A/T
Inhibitor
switch
Solenoid
NS
Inhibitor SW-P
*1
18 23
138
134
GB12A
1
GB10A
2
LgB AT43
YR AT22
*1
1 2 3 4 5
6 7 8 9 10 11
12 13
14 15 16 17 18 19
20 21 22 23 24
U14
110
FH1
BA01 15-W
High-current
fuse box
5-L
BB01
ST01
J25
BM3A
3
DD20A
13
J27
Chassis
Cab
A/T
J33
DD15B
5
AK18A
4
J32
AT43
AT22
Gr23A B61
A/T ECU
YR AT22
17 AK20A
INHIBITOR SW P
LgB AT43
10 AK10A
NS
WL AT50
10 AK14A
N SIG
BB01
ST01
AT51
AT01
ATE4
DD12A
3
J11
R AT53
AT19
ATE4 B
CE09 2-B
CE11 5-B
JCE5 3-B
JCE3 2-B
JCE3 2-B
CE09 2-B
ATE5 B
JCE4 2-B
JCE4 2-B
JCE5 3-B
CE11 5-B
CE11 5-B
AT19 RG
AT16 R
AT50 WL
ATE5 B
2 5 4 3 1
EQ5A
25 24 8 9
10 4
130
130
(J/C-1)
J39
(J/C-6)
J05
JOINT E9
JOINT 14
905
Joint connector
[15]
130
A/T N/P
signal reversing
relay
#201 B13
Relay box 1

210-C04933-2

＜Automatic transmission (FM)＞

A/T : Automatic transmission
N/P : Neutral/Parking
ECU : Electronic control unit

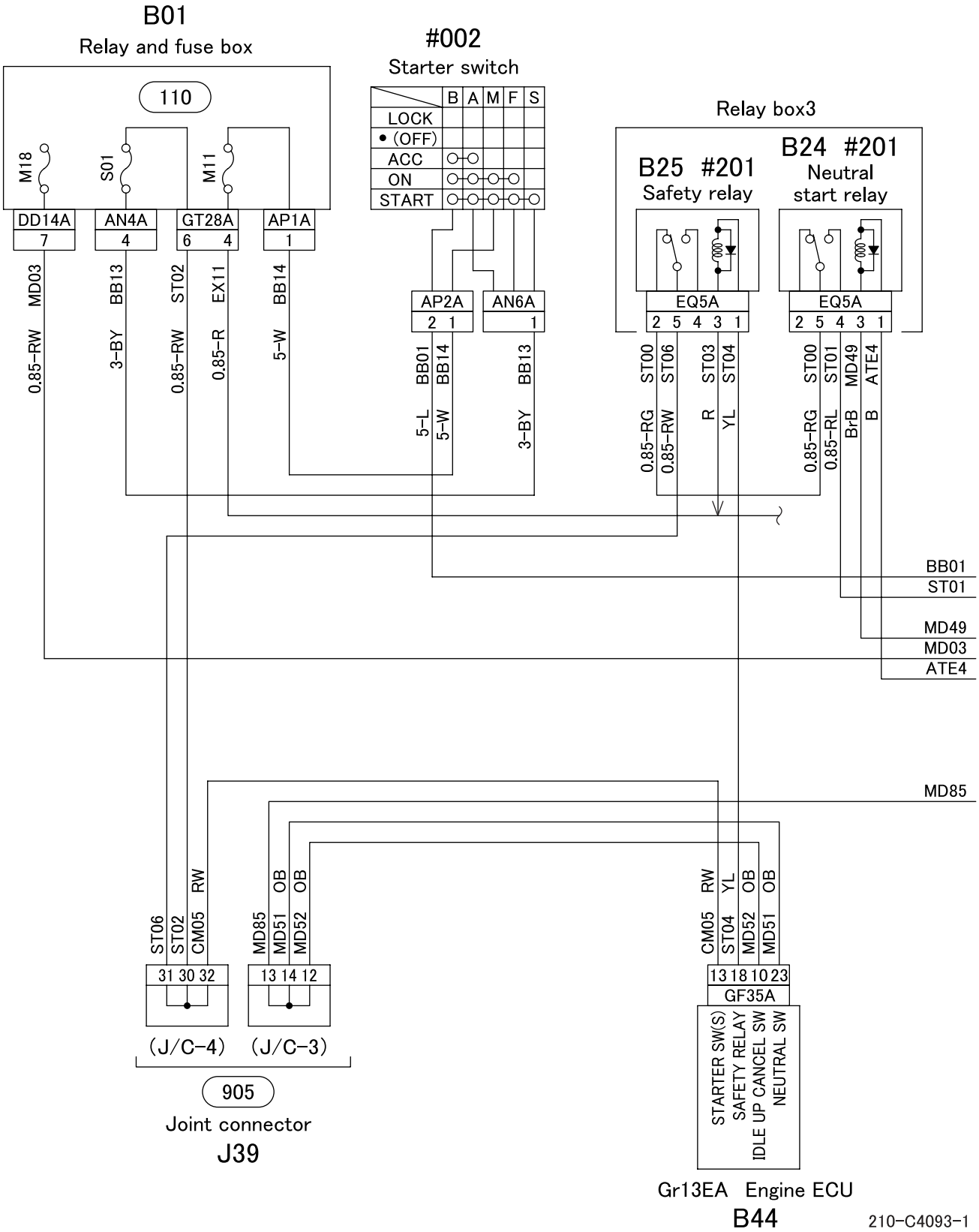

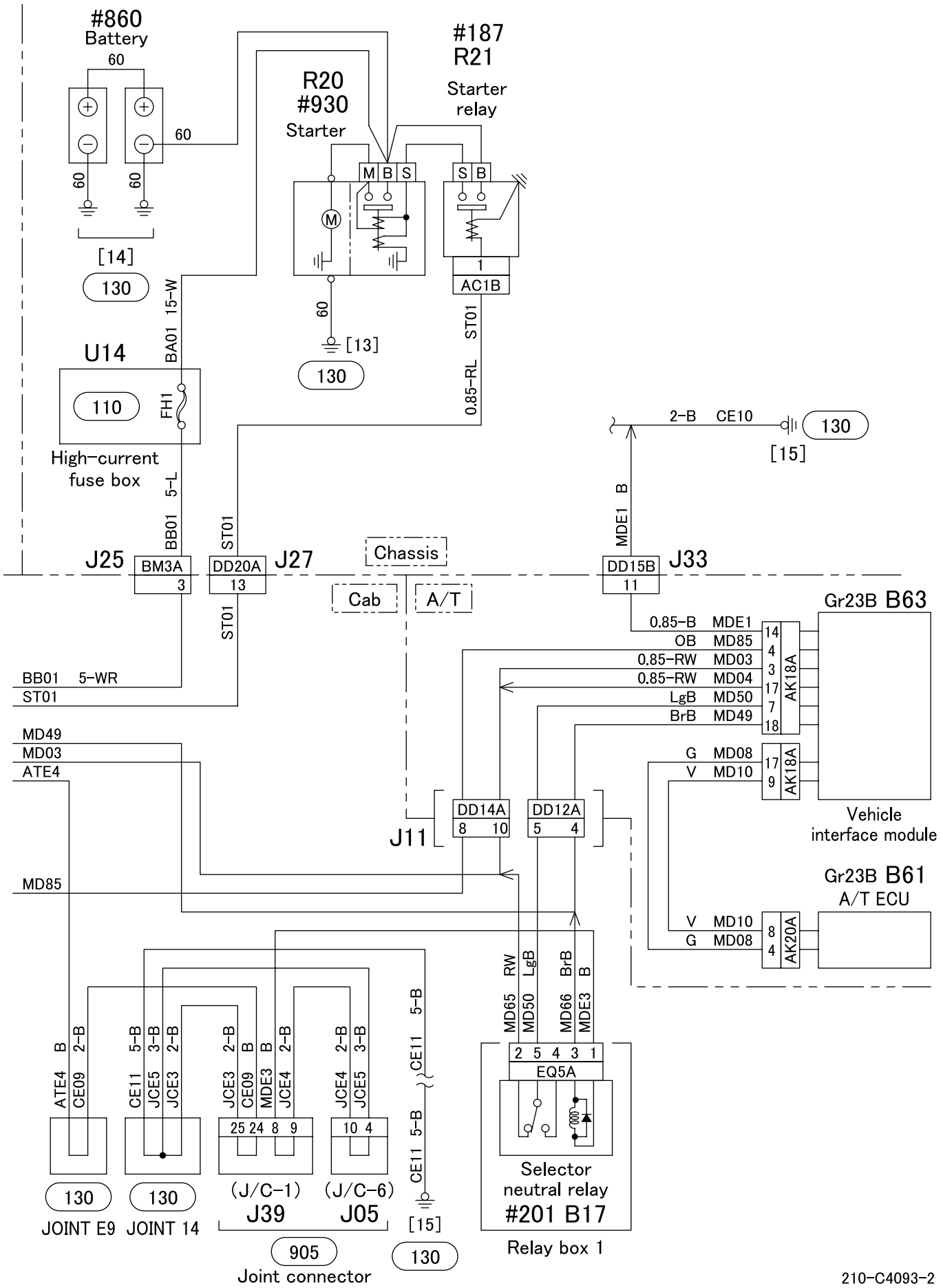
#860
Battery
60
60
60
60
[14]
130
#187
R21
Starter
relay
R20
#930
Starter
M B S
S B
1
AC1B
60
[13]
130
ST01
0.85-RL
15-W
BA01
U14
110
FH1
High-current
fuse box
5-L
BB01
ST01
2-B CE10
130
[15]
MDE1 B
J25
BM3A
3
DD20A
13
J27
Chassis
Cab
A/T
DD15B
11
J33
Gr23B B63
0.85-B MDE1
OB MD85
0.85-RW MD03
0.85-RW MD04
LgB MD50
BrB MD49
14
4
3
17
7
18
AK18A
G MD08
V MD10
17
9
AK18A
Vehicle
interface module
BB01 5-WR
ST01
MD49
MD03
ATE4
MD85
DD14A
8 10
DD12A
5 4
J11
Gr23B B61
A/T ECU
V MD10
G MD08
8
4
AK20A
MD65 RW
MD50 LgB
MD66 BrB
MDE3 B
2 5 4 3 1
EQ5A
Selector
neutral relay
#201 B17
Relay box 1
ATE4 B
CE09 2-B
CE11 5-B
JCE5 3-B
JCE3 2-B
JCE3 2-B
CE09 B
MDE3 B
JCE4 2-B
JCE4 2-B
JCE5 3-B
CE11 5-B
CE11 5-B
25 24 8 9
10 4
130
130
JOINT E9
JOINT 14
(J/C-1)
J39
(J/C-6)
J05
[15]
905
Joint connector
130

210-C4093-2

220 ENGINE PREHEATING CIRCUIT

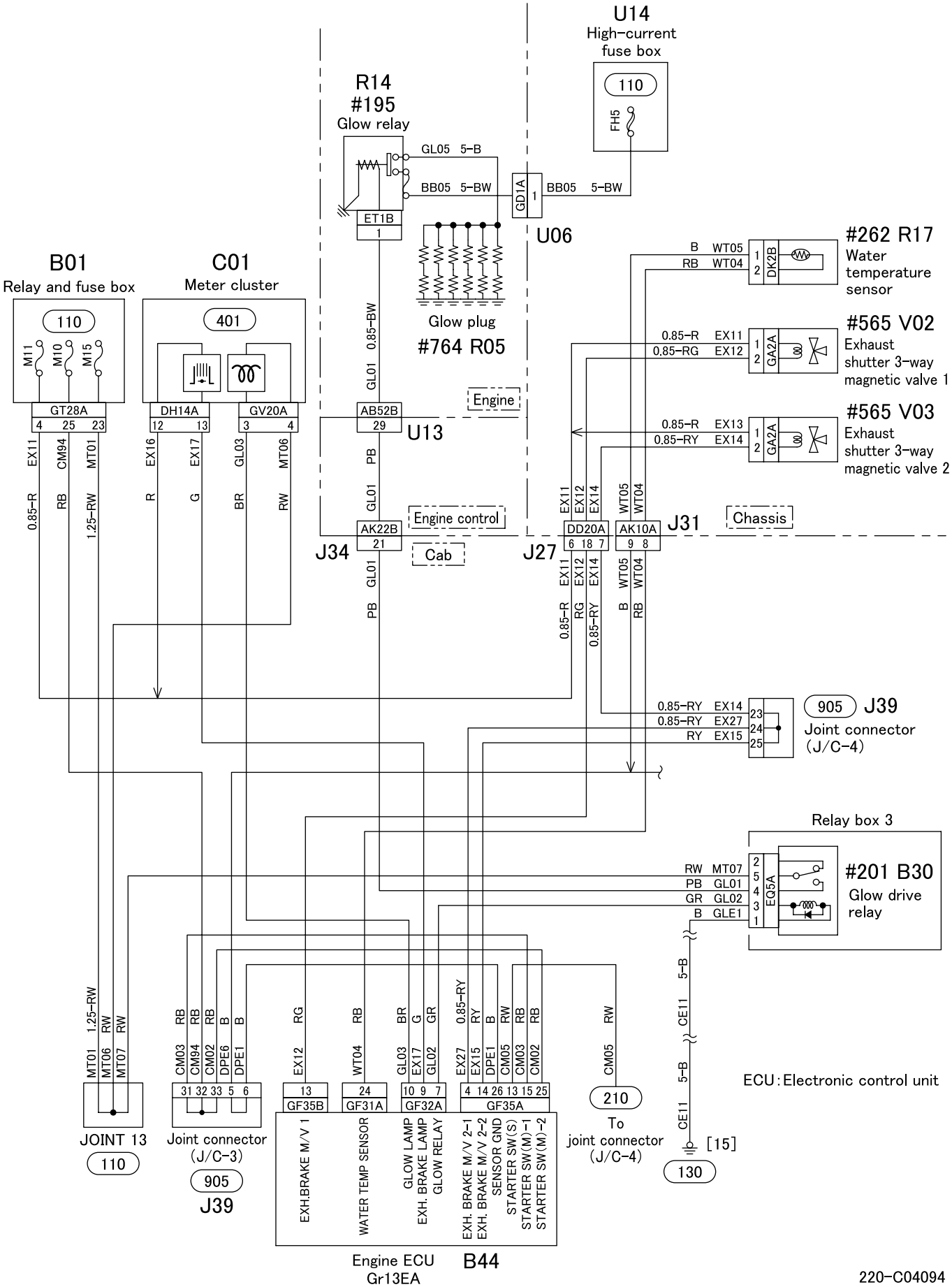

220-C04094

54-03 LIGHTING CIRCUIT

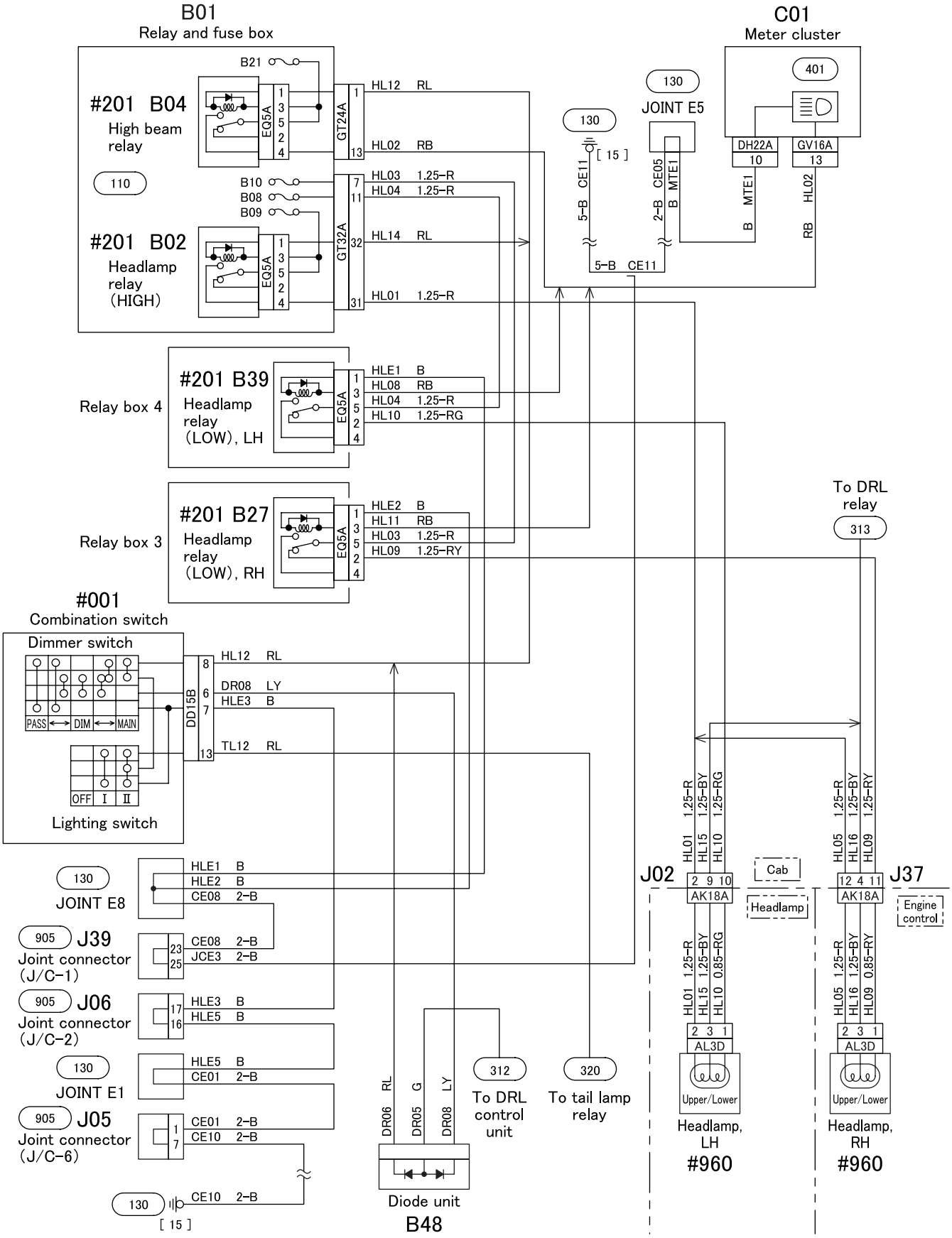

DRL : Daytime running light

310-C04095

M E M O

313 DAYTIME RUNNING LIGHT CIRCUIT

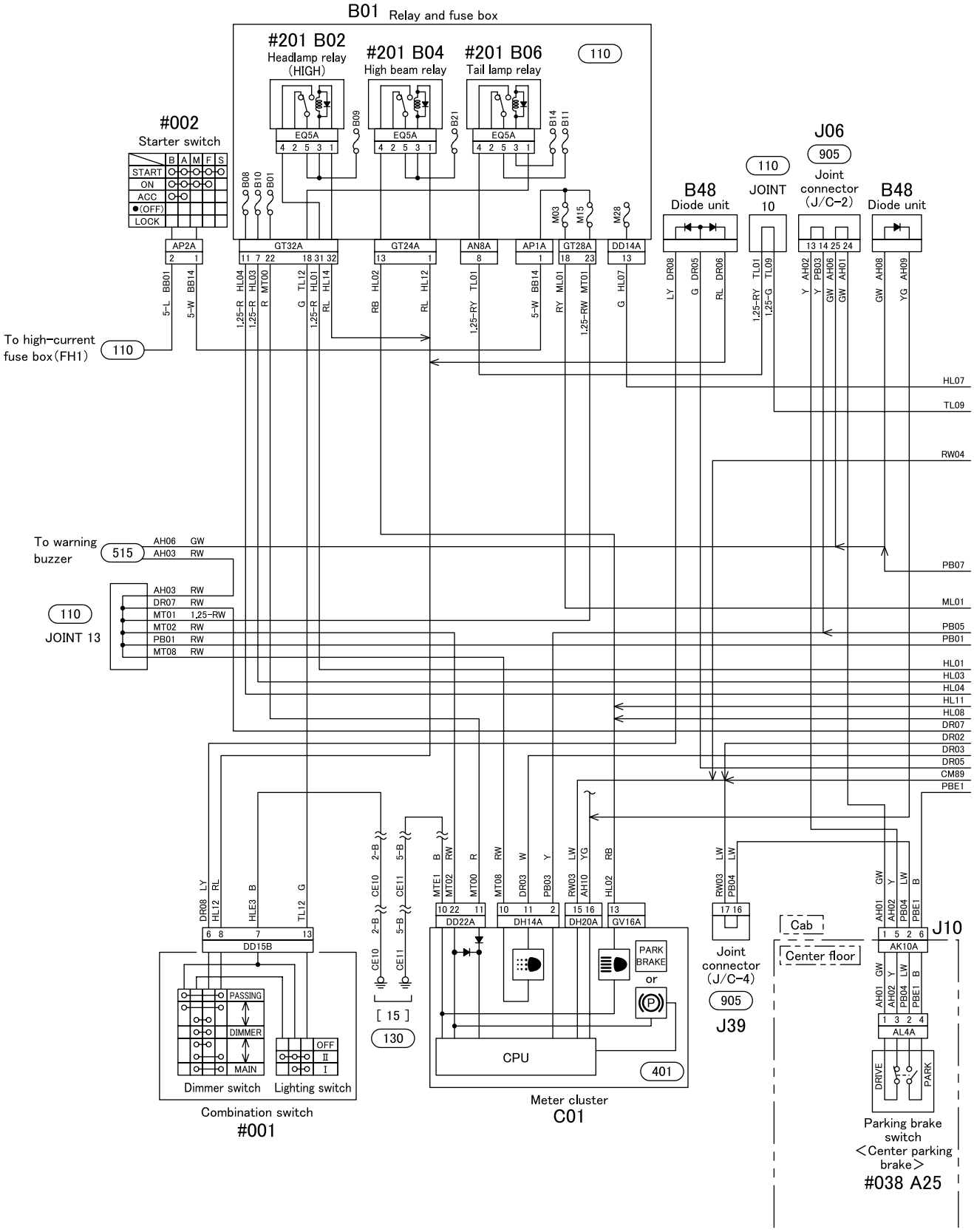

313-C04096-1

ECU : Electronic control unit
DRL : Daytime running light

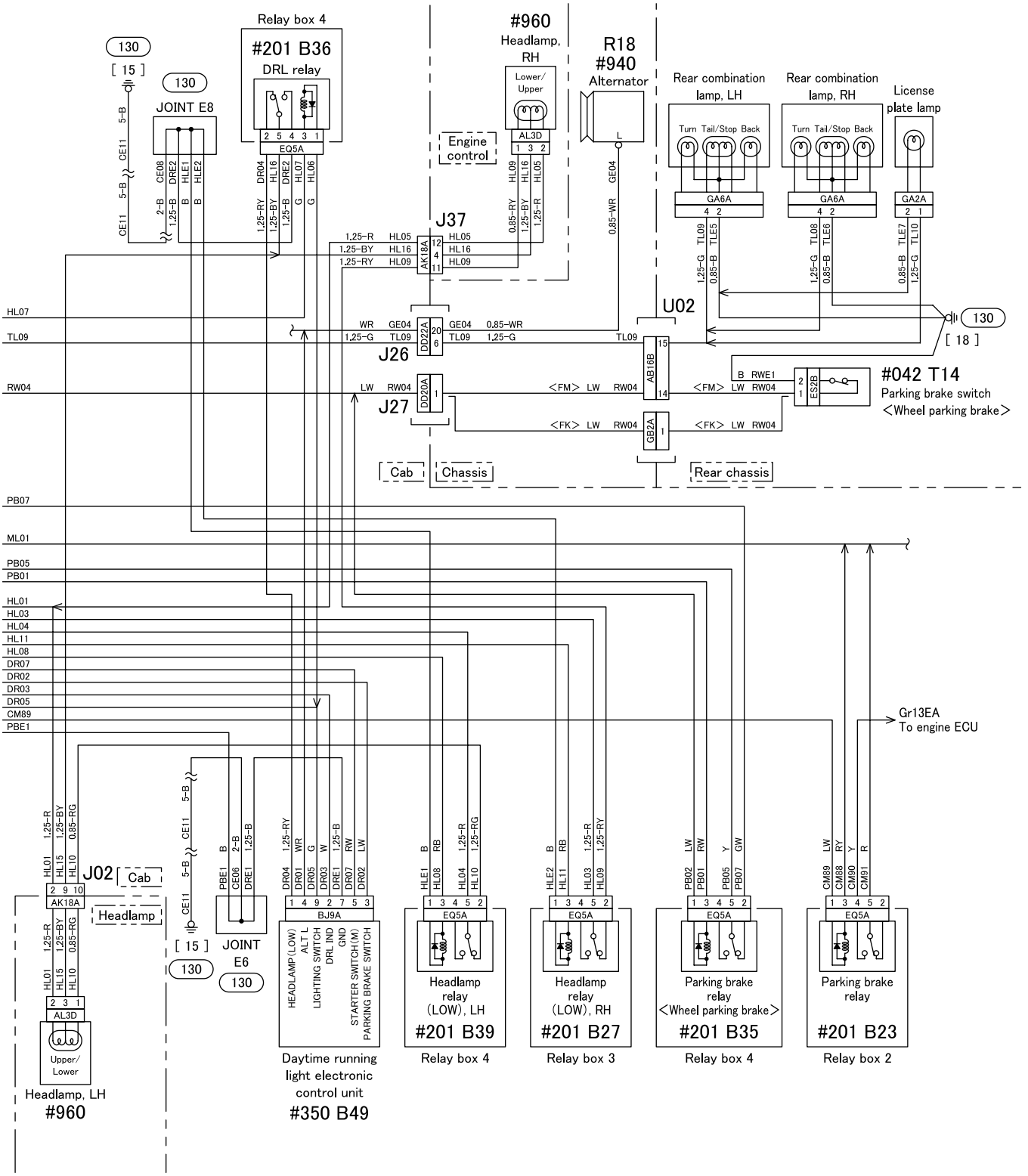

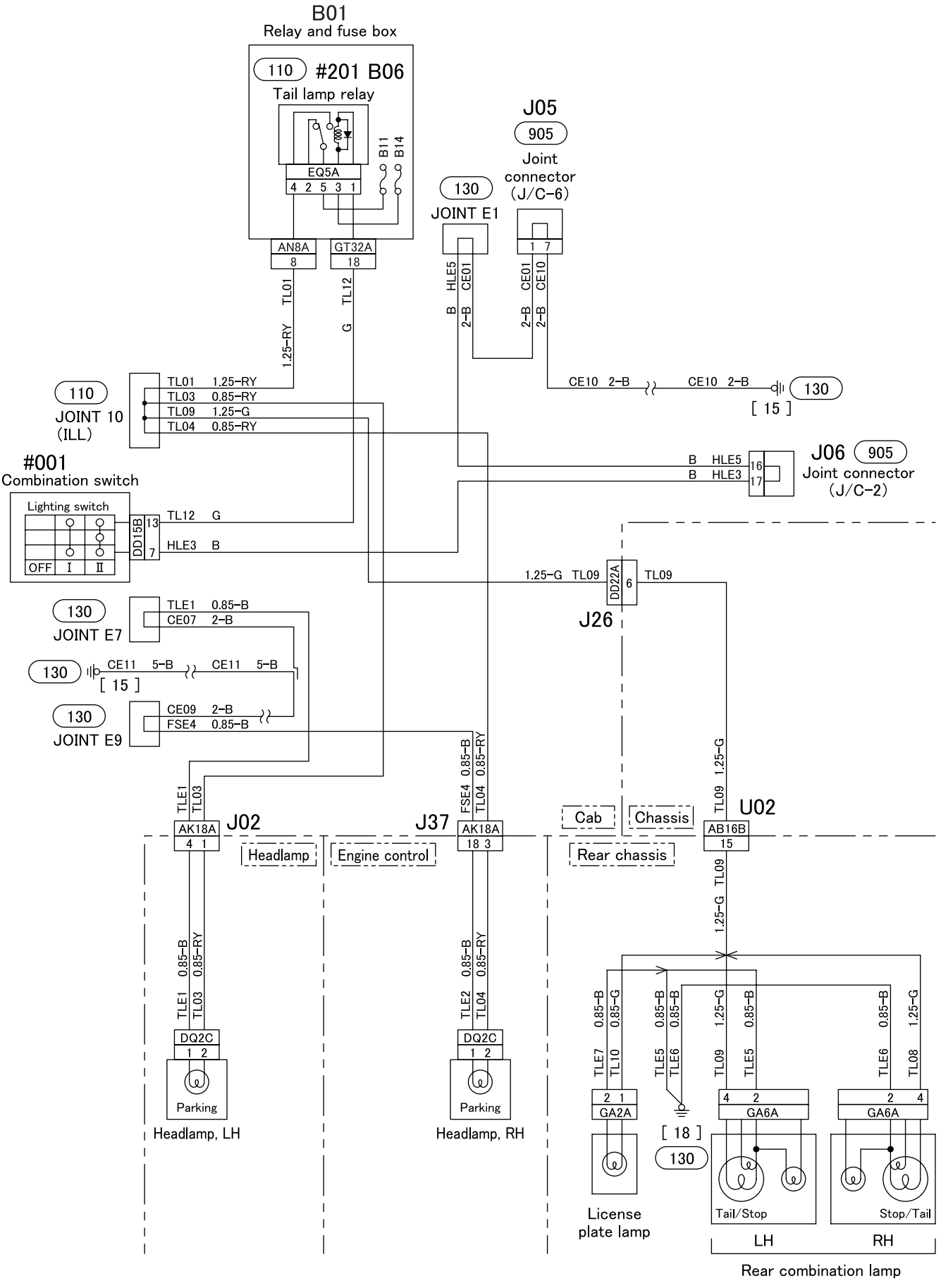
B01
Relay and fuse box
110
#201 B06
Tail lamp relay
EQ5A
4 2 5 3 1
B11
B14
AN8A
8
GT32A
18
TL01
1.25-RY
TL12
G
J05
905
Joint connector (J/C-6)
130
JOINT E1
HLE5
CE01
CE01
CE10
CE10 2-B
CE10 2-B
130
[15]
110
JOINT 10 (ILL)
TL01 1.25-RY
TL03 0.85-RY
TL09 1.25-G
TL04 0.85-RY
#001
Combination switch
Lighting switch
OFF I II
DD15B
13
7
TL12 G
HLE3 B
B HLE5
B HLE3
16
17
J06
905
Joint connector (J/C-2)
1.25-G TL09
DD22A
6
TL09
J26
130
JOINT E7
TLE1 0.85-B
CE07 2-B
130
CE11 5-B
CE11 5-B
[15]
130
JOINT E9
CE09 2-B
FSE4 0.85-B
TLE1
TL03
FSE4 0.85-B
TL04 0.85-RY
TL09 1.25-G
AK18A
4 1
J02
AK18A
18 3
J37
Cab
Chassis
AB16B
15
U02
Headlamp
Engine control
Rear chassis
TL09
1.25-G
TLE1 0.85-B
TL03 0.85-RY
TLE2 0.85-B
TL04 0.85-RY
DQ2C
1 2
Parking
Headlamp, LH
Headlamp, RH
TLE7 0.85-B
TL10 0.85-G
TLE5 0.85-B
TLE6 0.85-B
TL09 1.25-G
TLE5 0.85-B
TLE6 0.85-B
TL08 1.25-G
2 1
GA2A
[18]
130
4 2
GA6A
2 4
GA6A
License plate lamp
Tail/Stop
Stop/Tail
LH
RH
Rear combination lamp

320-C04097

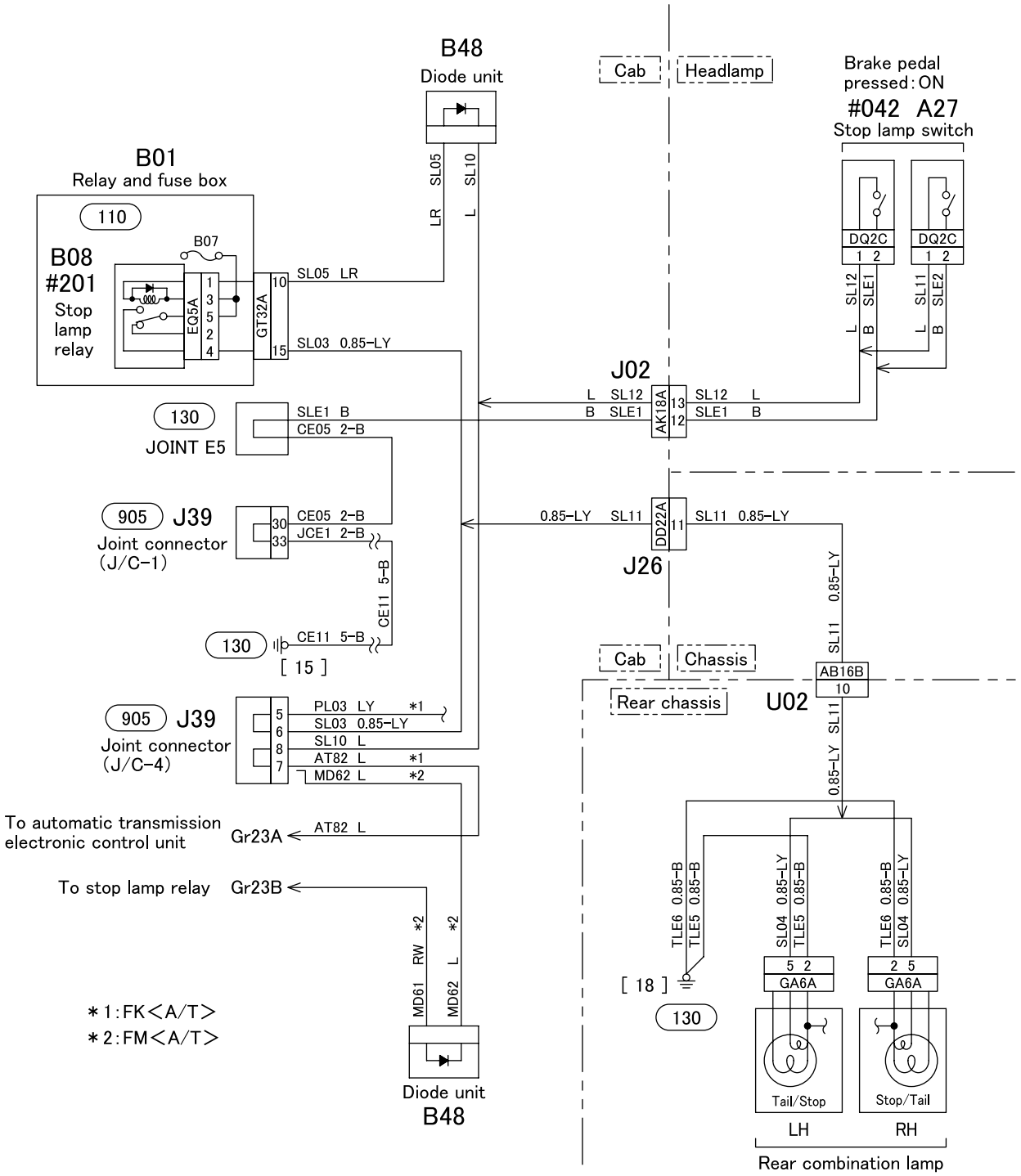
B48
Diode unit
Cab
Headlamp
Brake pedal
pressed : ON
#042 A27
Stop lamp switch
B01
Relay and fuse box
110
B07
B08
#201
Stop
lamp
relay
EQ5A
GT32A
SL05 LR
SL03 0.85-LY
SL05 LR
SL10 L
DQ2C
SL12 L
SL1 B
SL11 L
SL2 B
J02
AK18A
13
12
SL12 L
SLE1 B
130
JOINT E5
SLE1 B
CE05 2-B
905 J39
Joint connector
(J/C-1)
CE05 2-B
JCE1 2-B
CE11 5-B
130
CE11 5-B
[15]
0.85-LY SL11
DD22A
11
SL11 0.85-LY
J26
SL11 0.85-LY
Cab
Chassis
AB16B
10
Rear chassis
U02
905 J39
Joint connector
(J/C-4)
PL03 LY *1
SL03 0.85-LY
SL10 L
AT82 L *1
MD62 L *2
SL11 0.85-LY
To automatic transmission
electronic control unit
Gr23A
AT82 L
To stop lamp relay
Gr23B
MD61 RW *2
MD62 L *2
TLE6 0.85-B
TLE5 0.85-B
SL04 0.85-LY
TLE5 0.85-B
TLE6 0.85-B
SL04 0.85-LY
[18]
130
GA6A
GA6A
Tail/Stop
Stop/Tail
LH
RH
Rear combination lamp
Diode unit
B48
*1 : FK<A/T>
*2 : FM<A/T>

330 TURN SIGNAL AND HAZARD LAMP CIRCUIT

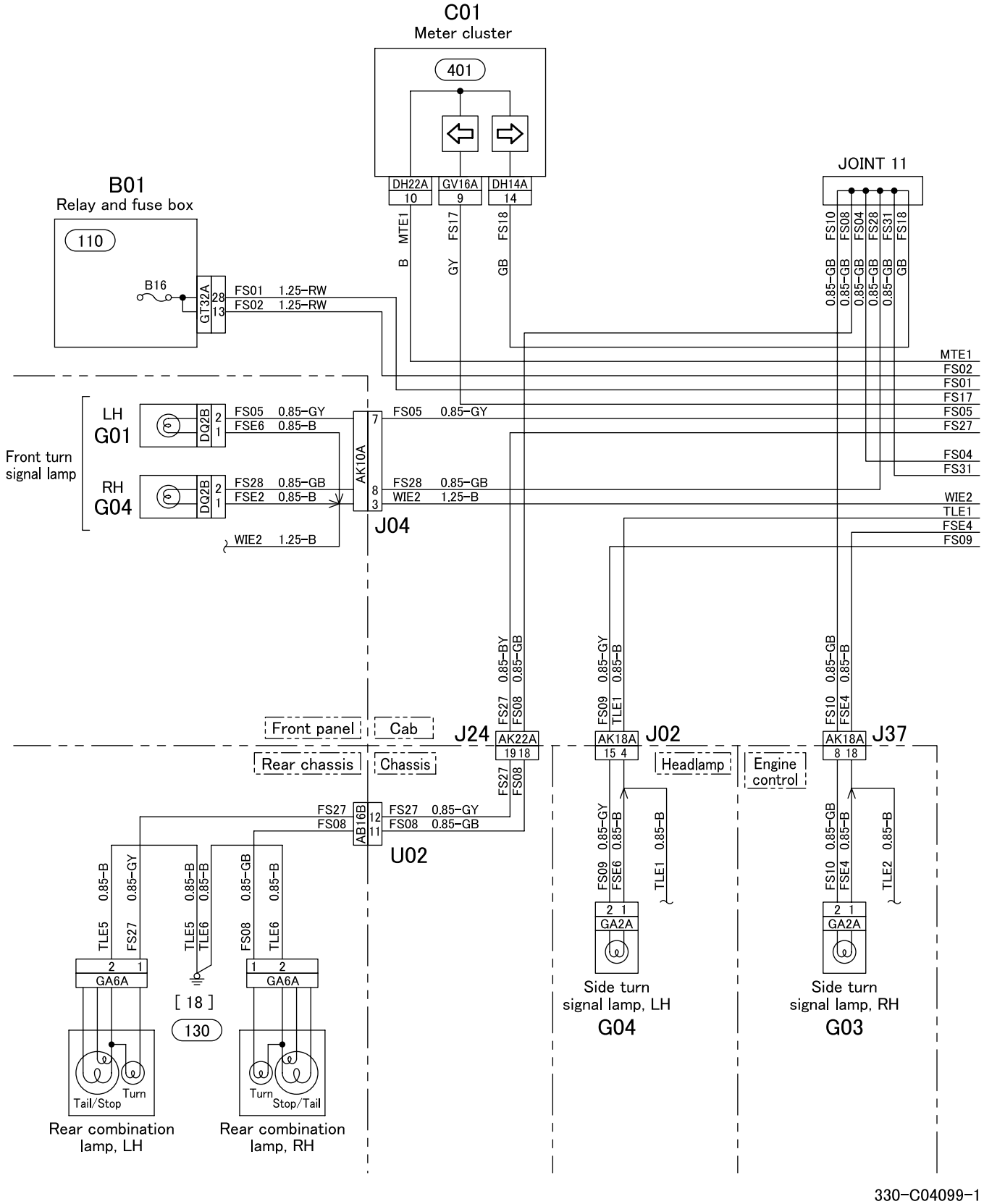

330-C04099-1

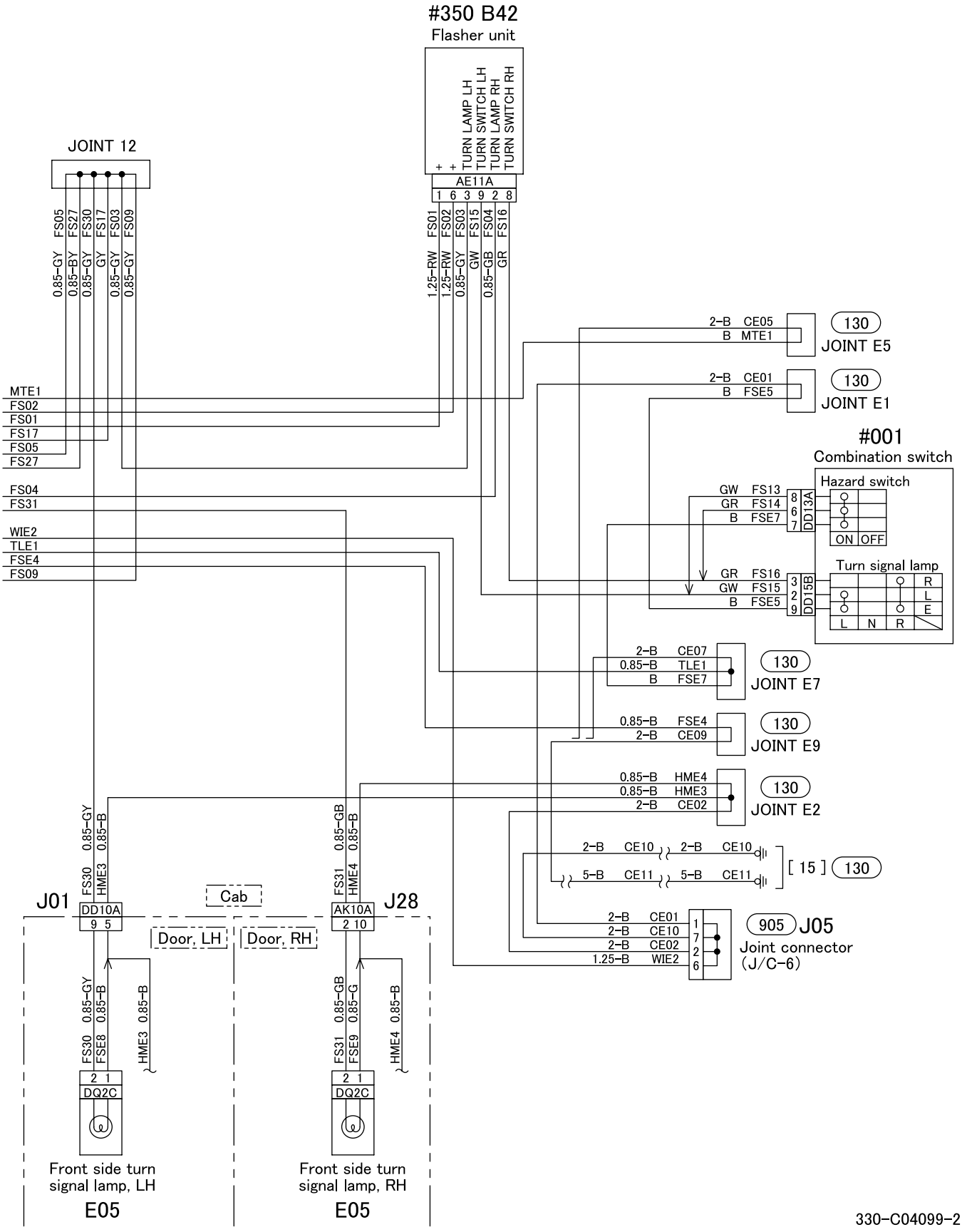
#350 B42
Flasher unit
TURN LAMP LH
TURN SWITCH LH
TURN LAMP RH
TURN SWITCH RH
AE11A
1 6 3 9 2 8
JOINT 12
FS05 FS27 FS30 FS17 FS03 FS09
0.85-GY 0.85-BY 0.85-GY GY 0.85-GY 0.85-GY
FS01 FS02 FS03 FS15 FS04 FS16
1.25-RW 1.25-RW 0.85-GY GW 0.85-GB GR
MTE1
FS02
FS01
FS17
FS05
FS27
FS04
FS31
WIE2
TLE1
FSE4
FS09
2-B CE05
B MTE1
130
JOINT E5
2-B CE01
B FSE5
130
JOINT E1
#001
Combination switch
Hazard switch
GW FS13
GR FS14
B FSE7
8
6
7
DD13A
ON OFF
Turn signal lamp
GR FS16
GW FS15
B FSE5
3
2
9
DD15B
R
L
E
L N R
2-B CE07
0.85-B TLE1
B FSE7
130
JOINT E7
0.85-B FSE4
2-B CE09
130
JOINT E9
0.85-B HME4
0.85-B HME3
2-B CE02
130
JOINT E2
2-B CE10
2-B CE10
5-B CE11
5-B CE11
[15]
130
2-B CE01
2-B CE10
2-B CE02
1.25-B WIE2
1
7
2
6
905
J05
Joint connector
(J/C-6)
J01
DD10A
9 5
FS30 0.85-GY
HME3 0.85-B
Cab
Door, LH
Door, RH
J28
AK10A
2 10
FS31 0.85-GB
HME4 0.85-B
FS30 0.85-GY
FSE8 0.85-B
HME3 0.85-B
FS31 0.85-GB
FSE9 0.85-G
HME4 0.85-B
2 1
DQ2C
Front side turn
signal lamp, LH
E05
Front side turn
signal lamp, RH
E05

330-C04099-2

340 BACKUP LAMP CIRCUIT

<Manual transmission>

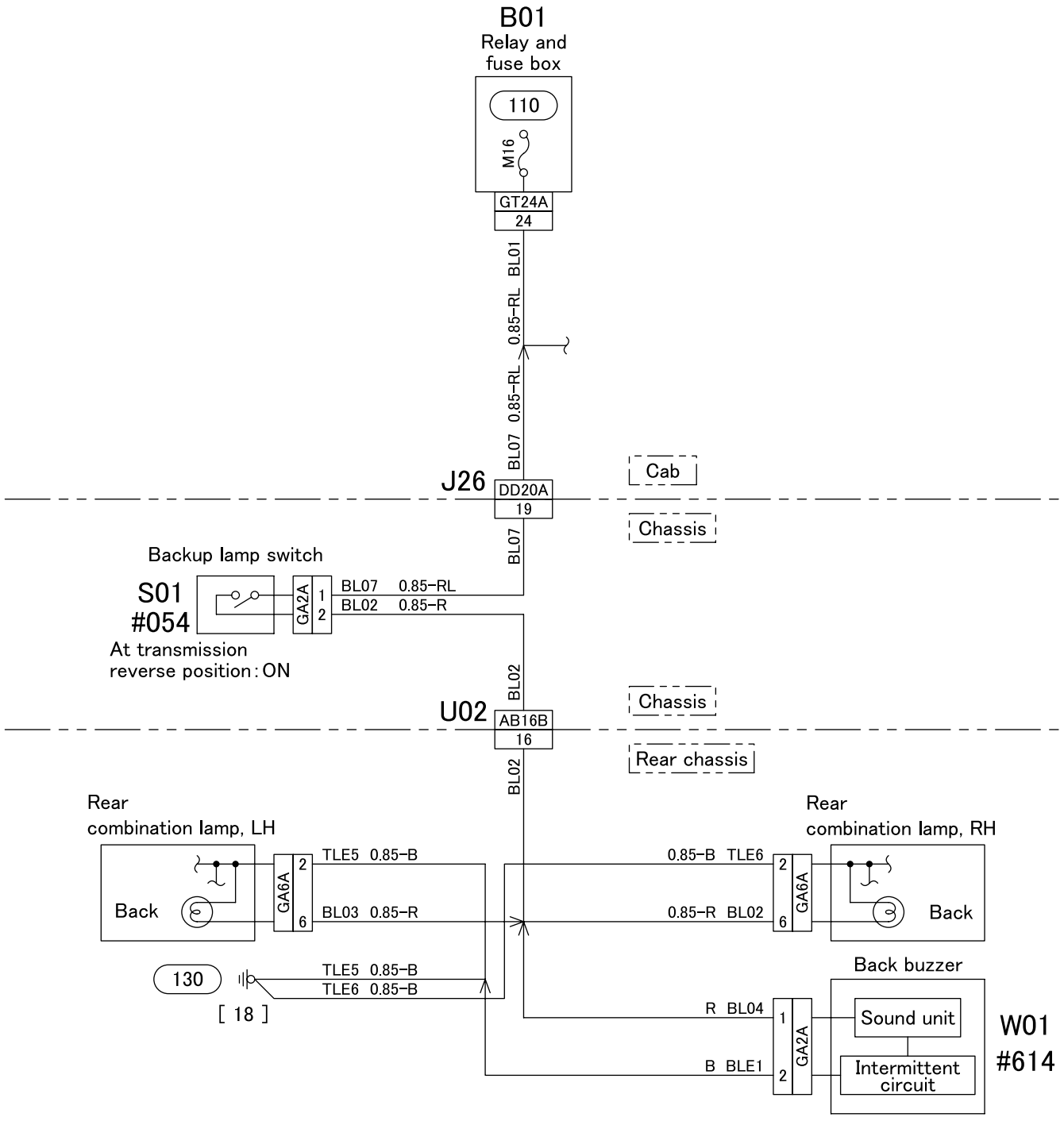

340-C04100

<Automatic transmission (FK)>

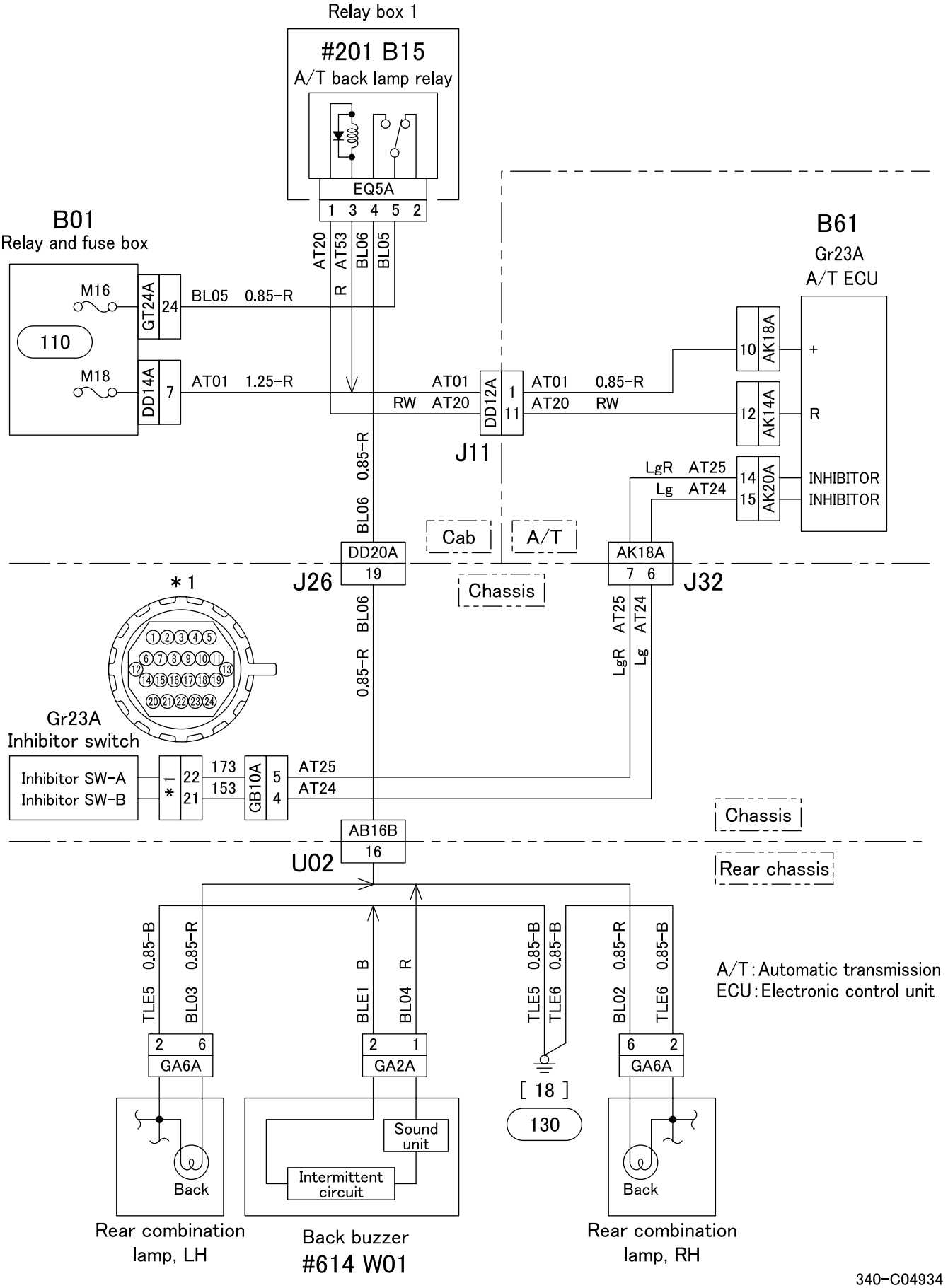

340-C04934

<Automatic transmission (FM)>

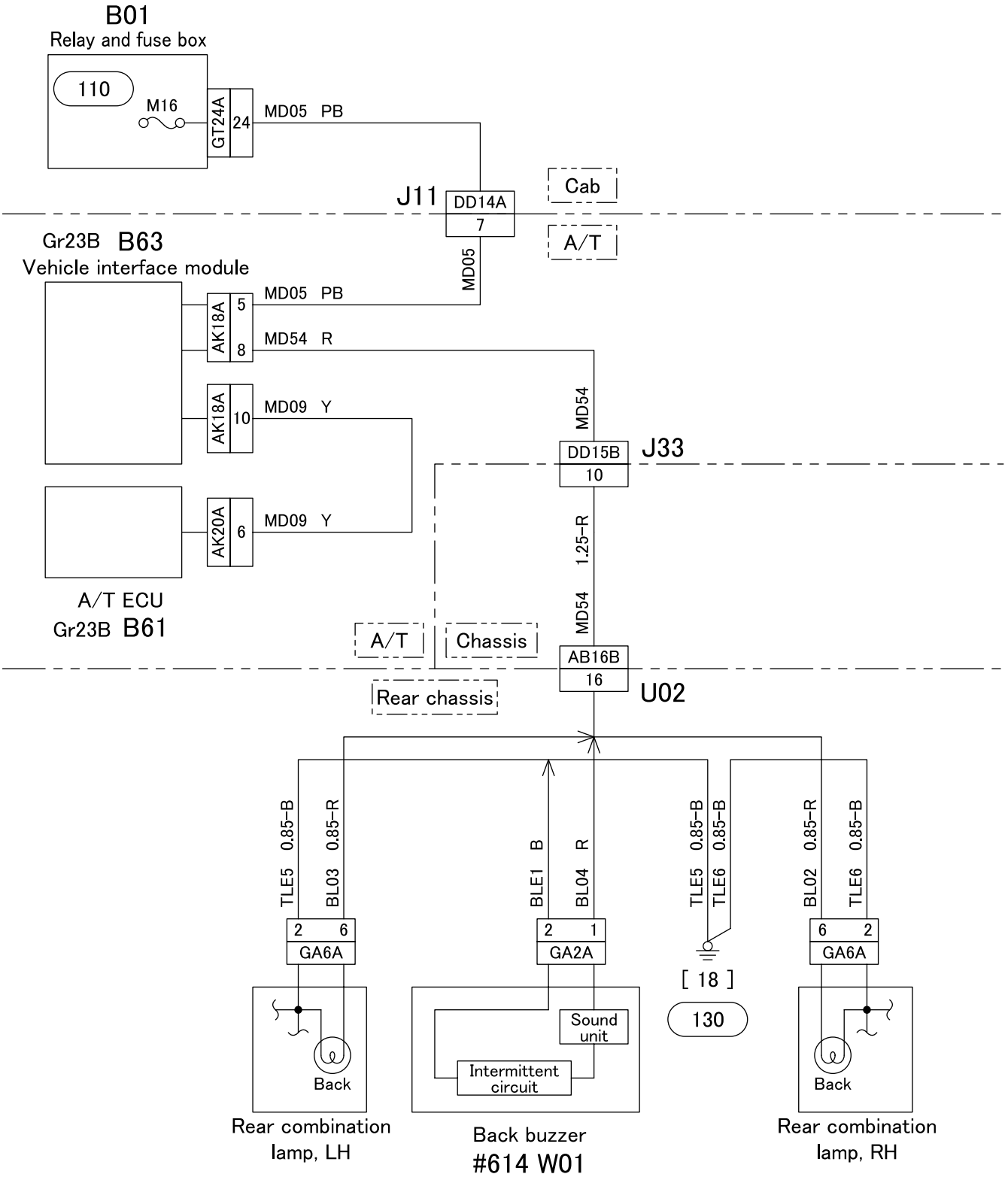

A/T : Automatic transmission
ECU : Electronic control unit

340-C04102

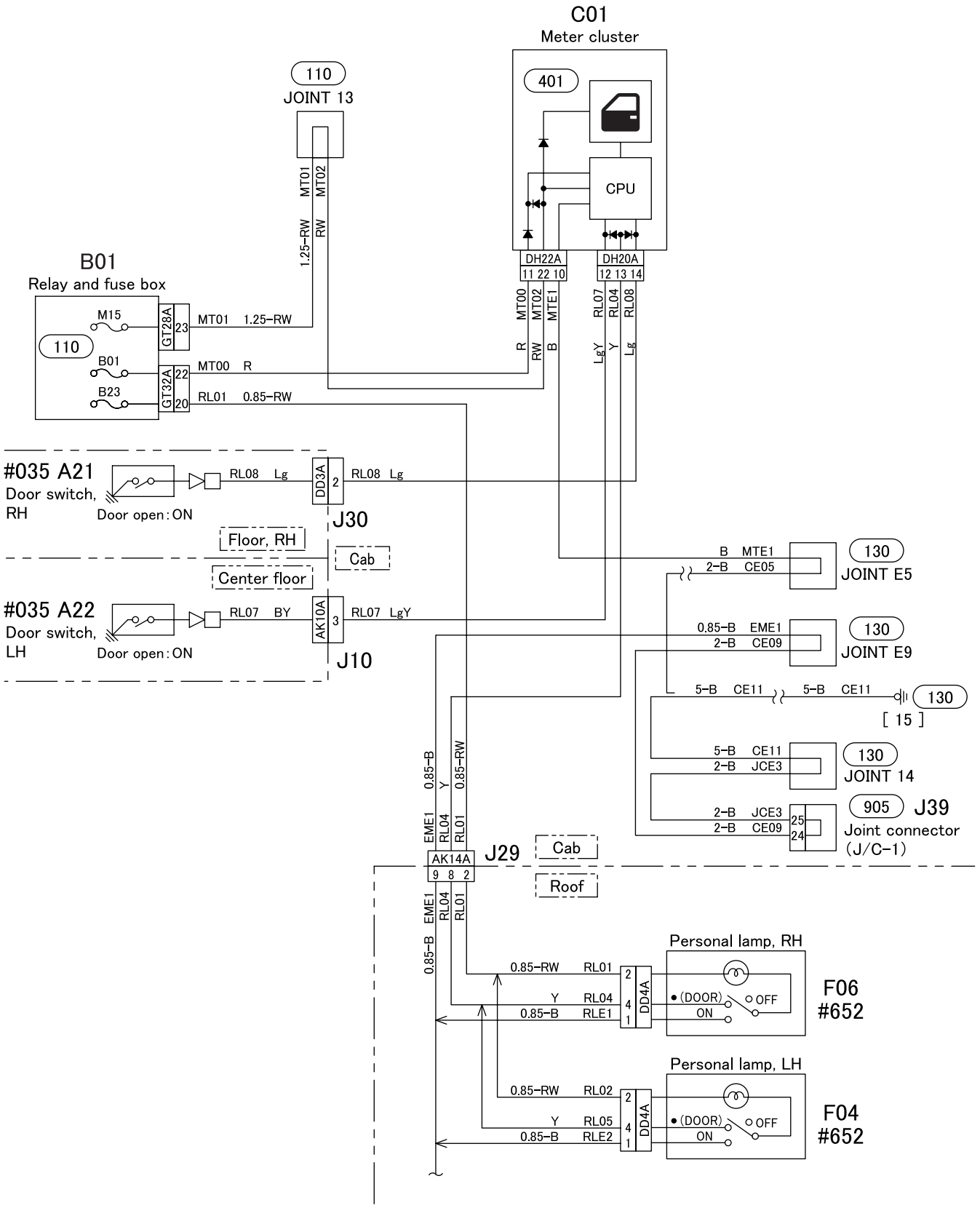
C01
Meter cluster
401
CPU
DH22A
11 22 10
DH20A
12 13 14
110
JOINT 13
MT01
MT02
1.25-RW
RW
B01
Relay and fuse box
M15
GT28A
23
MT01 1.25-RW
110
B01
GT32A
22
MT00 R
B23
20
RL01 0.85-RW
MT00
MT02
MTE1
R
RW
B
RL07
RL04
RL08
LgY
Y
Lg
#035 A21
Door switch,
RH
Door open : ON
RL08 Lg
DD3A
2
RL08 Lg
J30
Floor, RH
Cab
Center floor
#035 A22
Door switch,
LH
Door open : ON
RL07 BY
AK10A
3
RL07 LgY
J10
B MTE1
2-B CE05
130
JOINT E5
0.85-B EME1
2-B CE09
130
JOINT E9
5-B CE11
5-B CE11
130
[15]
5-B CE11
2-B JCE3
130
JOINT 14
2-B JCE3
2-B CE09
25
24
905 J39
Joint connector
(J/C-1)
0.85-B
Y
0.85-RW
EME1
RL04
RL01
AK14A
9 8 2
J29
Cab
Roof
Personal lamp, RH
0.85-RW RL01
Y RL04
0.85-B RLE1
2
4
1
DD4A
• (DOOR)
ON
OFF
F06
#652
Personal lamp, LH
0.85-RW RL02
Y RL05
0.85-B RLE2
F04
#652

345-C04103

348 ILLUMINATION LAMP CIRCUIT

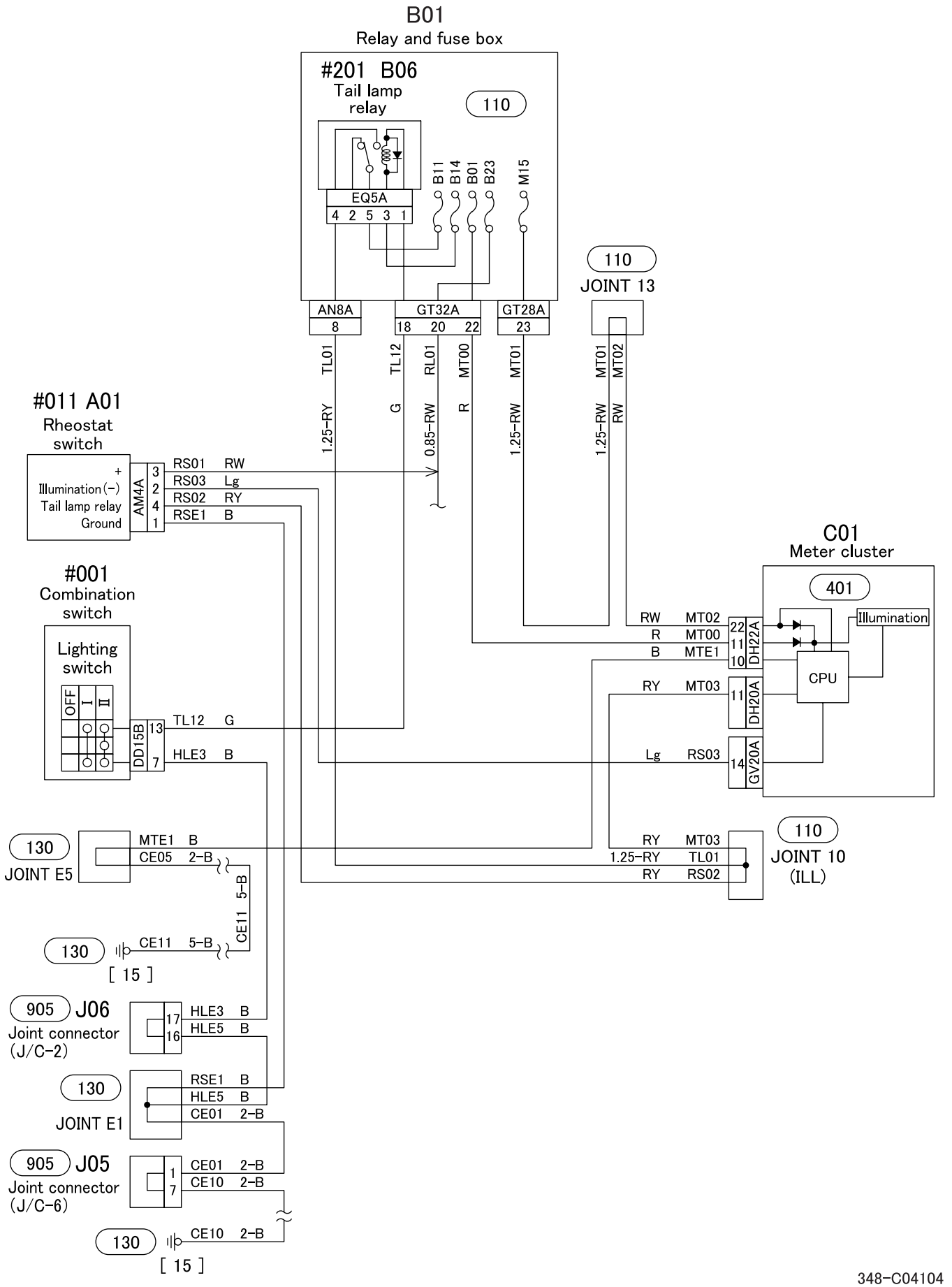

348-C04104

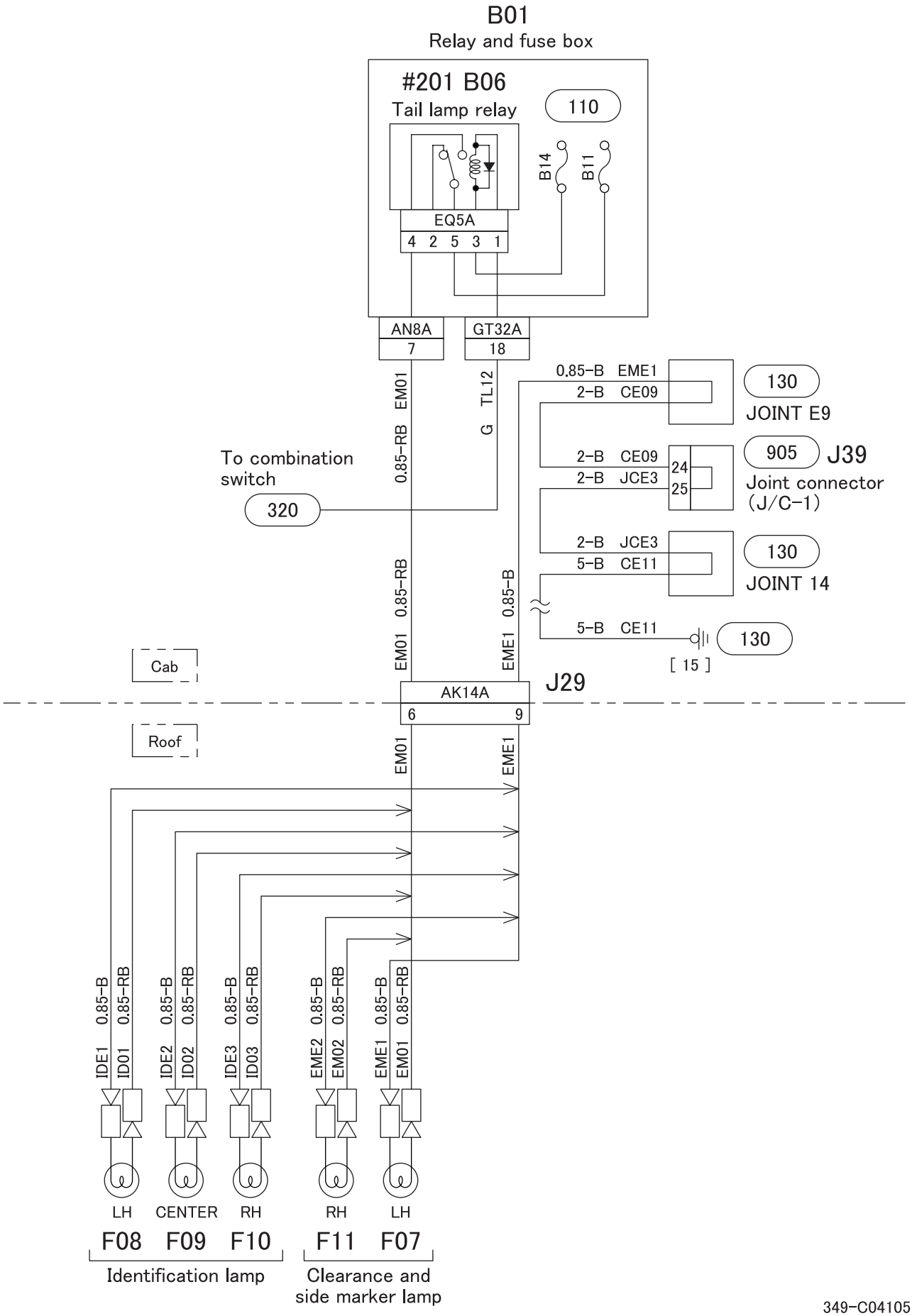
B01
Relay and fuse box
#201 B06
Tail lamp relay
110
B14
B11
EQ5A
4 2 5 3 1
AN8A
7
GT32A
18
0.85-B EME1
2-B CE09
130
JOINT E9
905
J39
2-B CE09
2-B JCE3
24
25
Joint connector
(J/C-1)
2-B JCE3
5-B CE11
130
JOINT 14
5-B CE11
130
[15]
To combination
switch
320
0.85-RB EM01
G TL12
EM01 0.85-RB
EME1 0.85-B
Cab
J29
AK14A
6
9
Roof
EM01
EME1
IDE1 0.85-B
ID01 0.85-RB
IDE2 0.85-B
ID02 0.85-RB
IDE3 0.85-B
ID03 0.85-RB
EME2 0.85-B
EM02 0.85-RB
EME1 0.85-B
EM01 0.85-RB
LH
CENTER
RH
RH
LH
F08 F09 F10
F11 F07
Identification lamp
Clearance and
side marker lamp

349-C04105

352 VAN BODY DOME LIGHT CIRCUIT

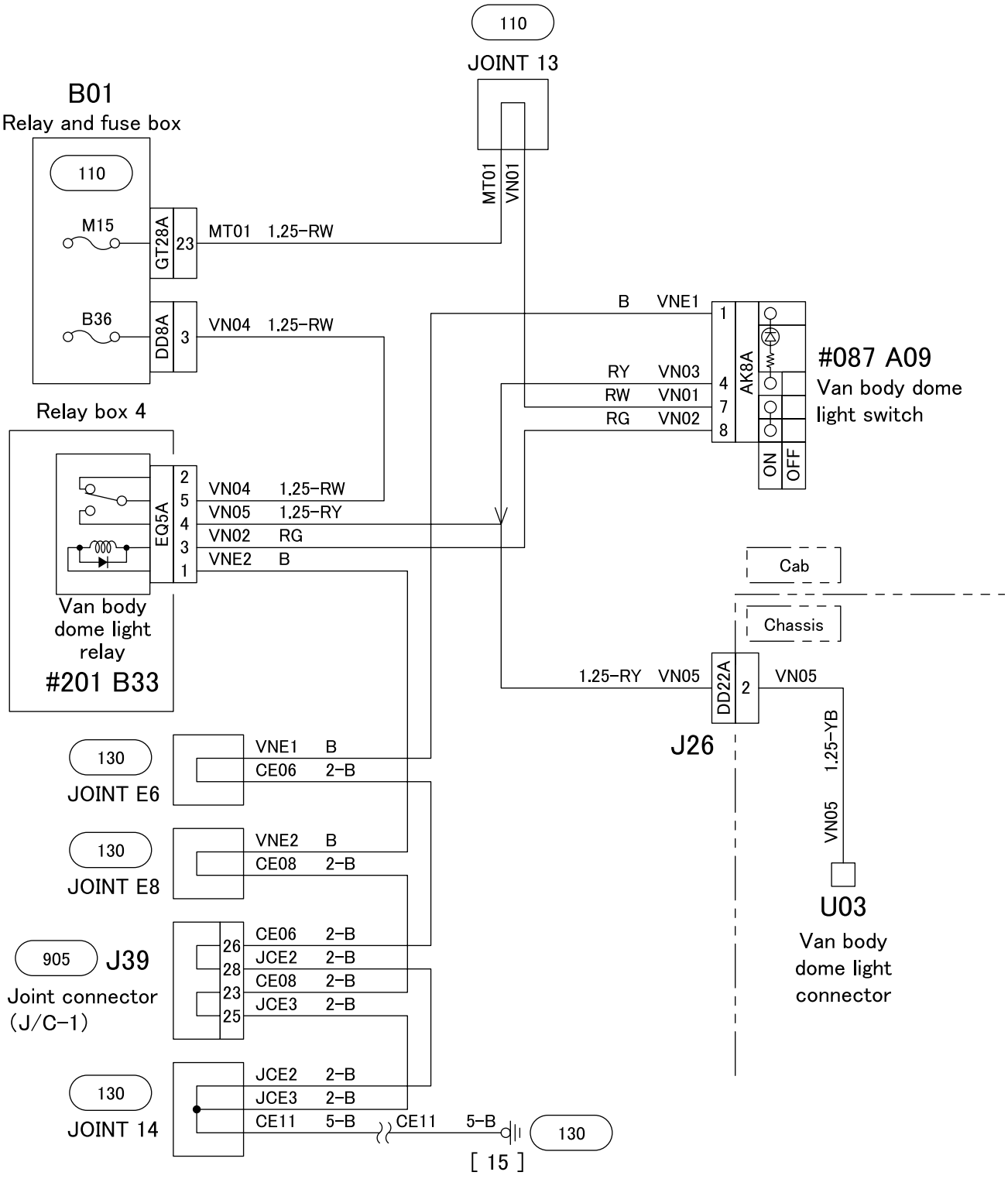

352-C04106

54-04 METER CIRCUIT

401 METER CLUSTER INTERNAL CIRCUIT

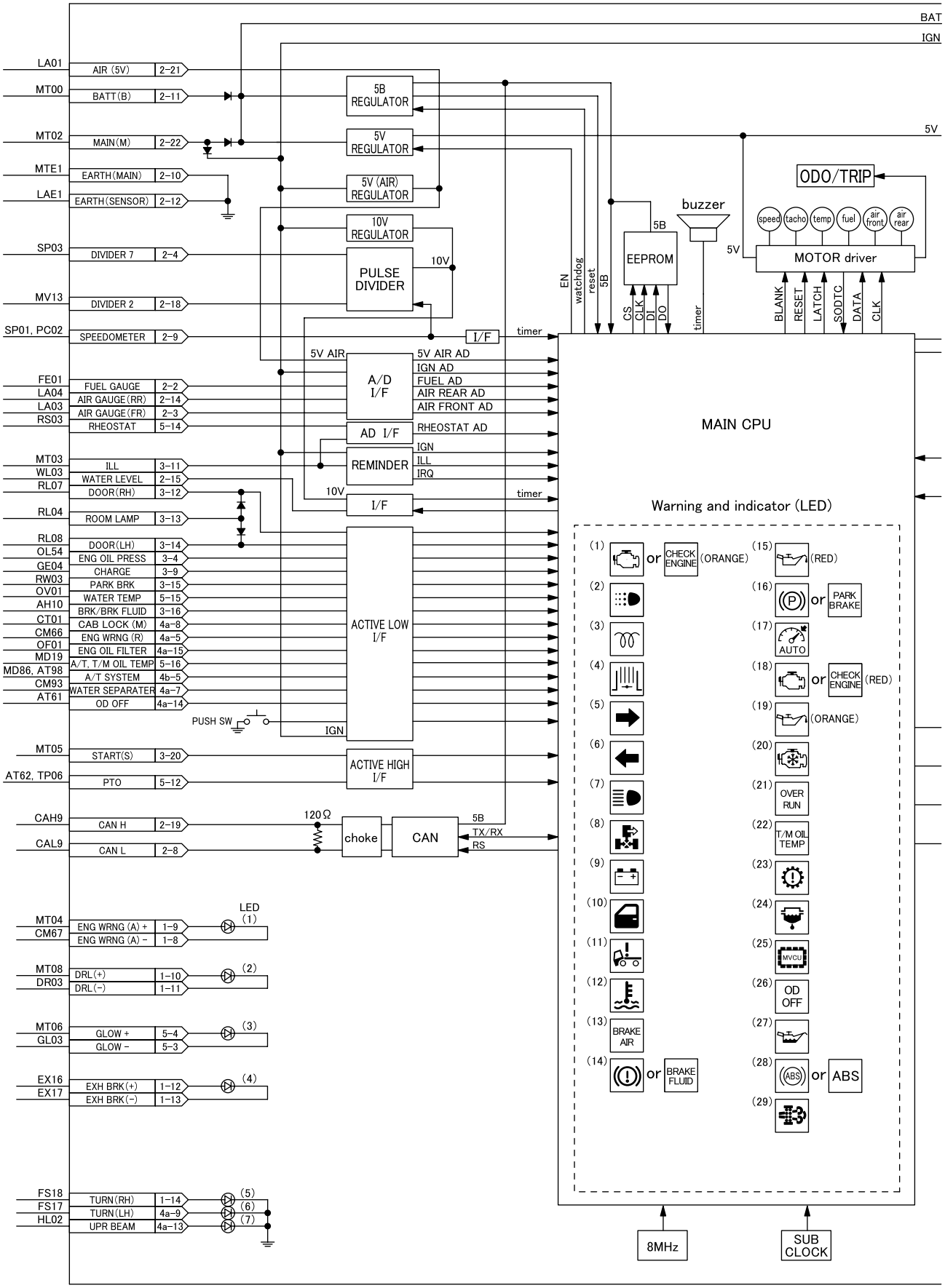

401-C04935-1

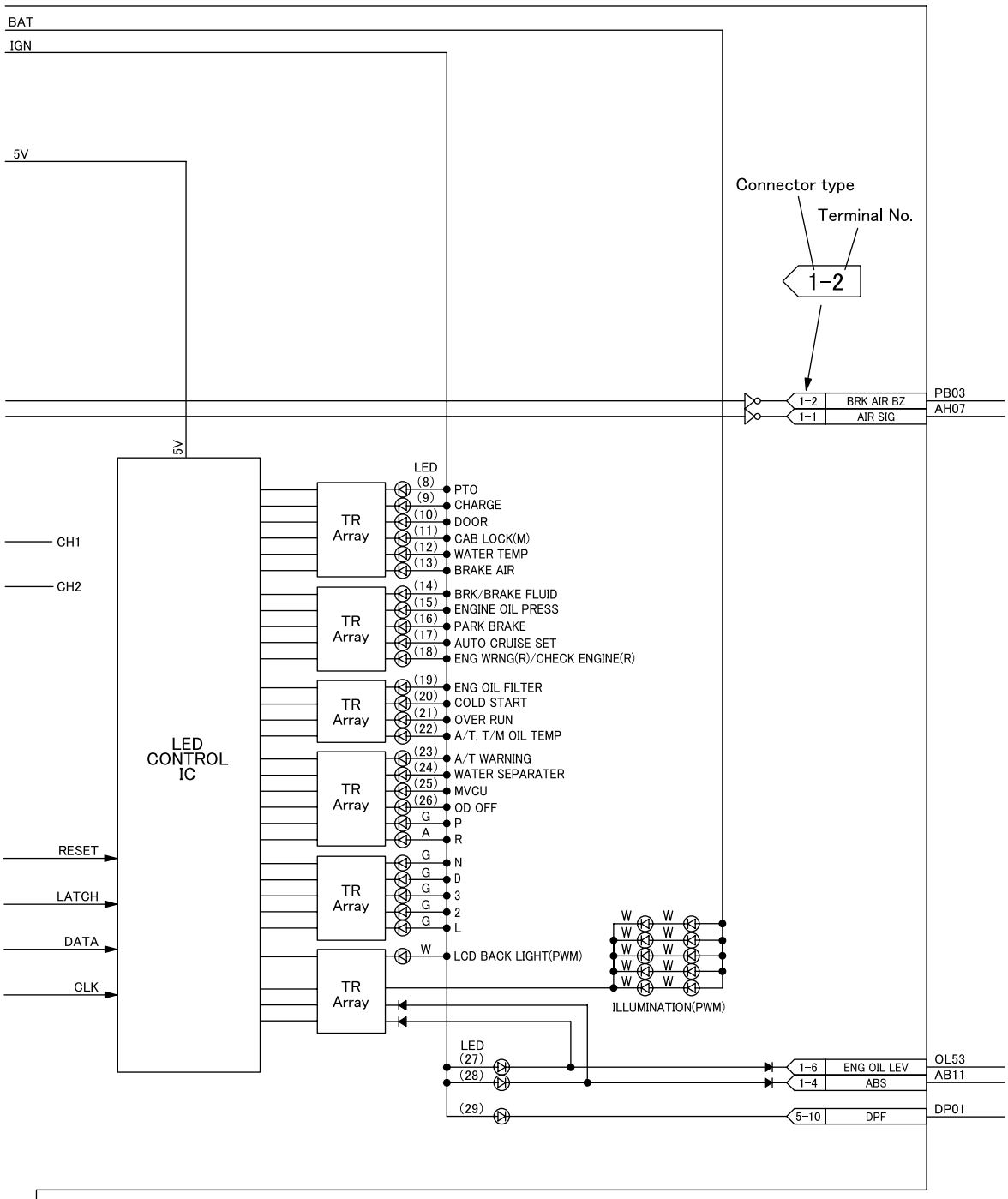

Meter cluster side connector

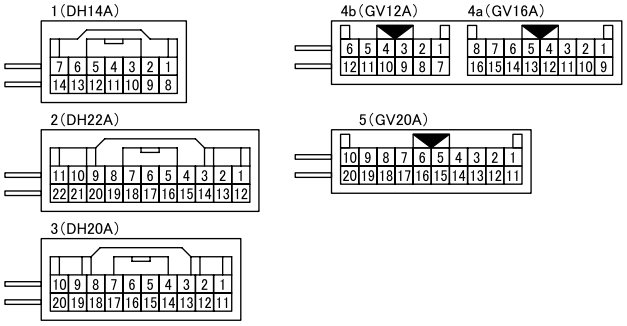

401-C04935-2

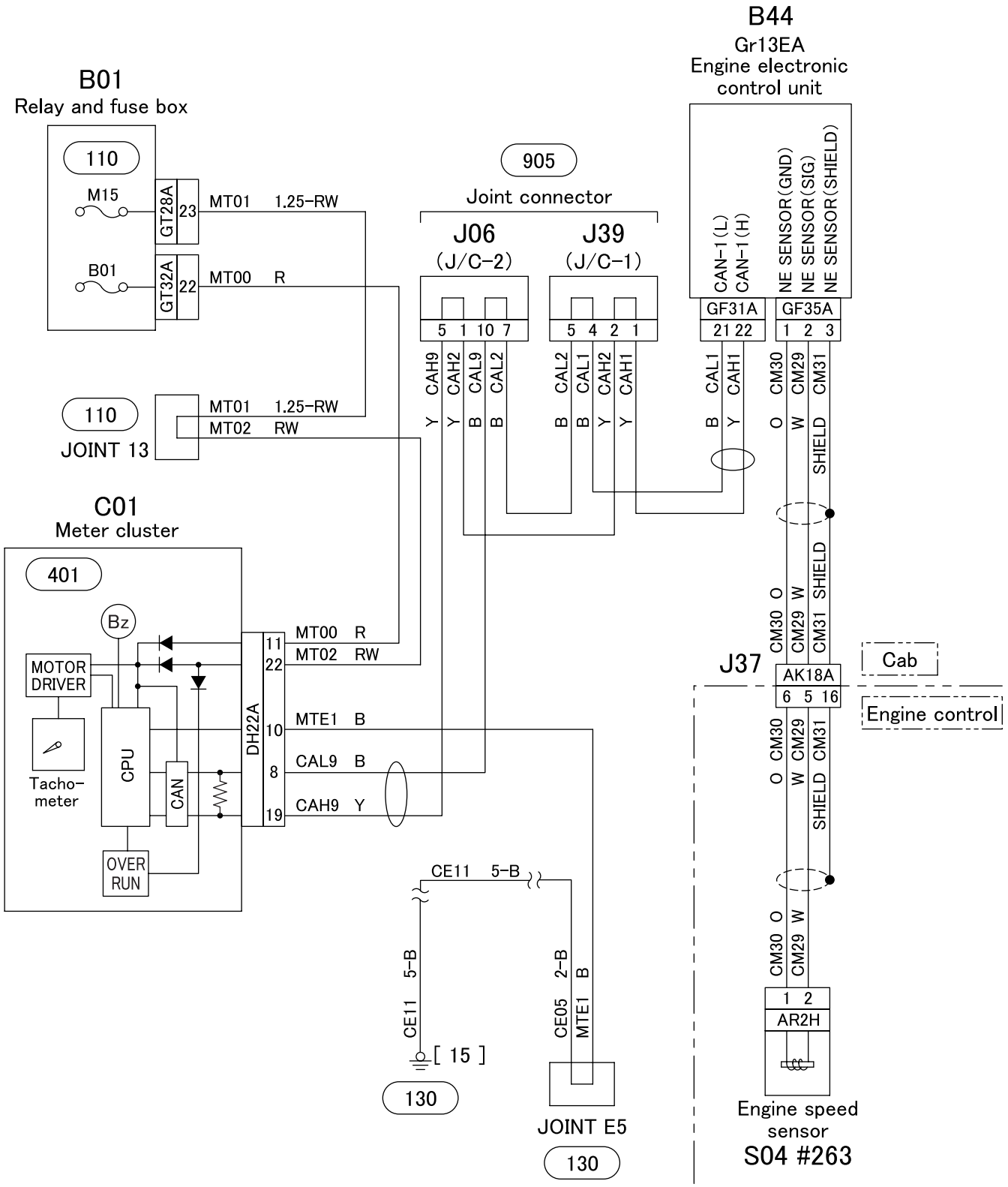
B44
Gr13EA
Engine electronic control unit
B01
Relay and fuse box
110
M15
GT28A
23
MT01 1.25-RW
B01
GT32A
22
MT00 R
110
JOINT 13
MT01 1.25-RW
MT02 RW
905
Joint connector
J06
(J/C-2)
J39
(J/C-1)
5 1 10 7
5 4 2 1
CAH9 CAH2 CAL9 CAL2
CAL2 CAL1 CAH2 CAH1
Y Y B B
B B Y Y
CAN-1(L)
CAN-1(H)
NE SENSOR(GND)
NE SENSOR(SIG)
NE SENSOR(SHIELD)
GF31A
21 22
GF35A
1 2 3
CAL1 CAH1
CM30 CM29 CM31
B Y
O W SHIELD
C01
Meter cluster
401
Bz
MOTOR DRIVER
Tacho-meter
CPU
CAN
OVER RUN
DH22A
11
22
10
8
19
MT00 R
MT02 RW
MTE1 B
CAL9 B
CAH9 Y
CM30 O
CM29 W
CM31 SHIELD
J37
AK18A
6 5 16
Cab
Engine control
CE11 5-B
CE11 5-B
[15]
130
CE05 2-B
MTE1 B
JOINT E5
130
1 2
AR2H
Engine speed sensor
S04 #263

410-C04108

<Manual transmission>

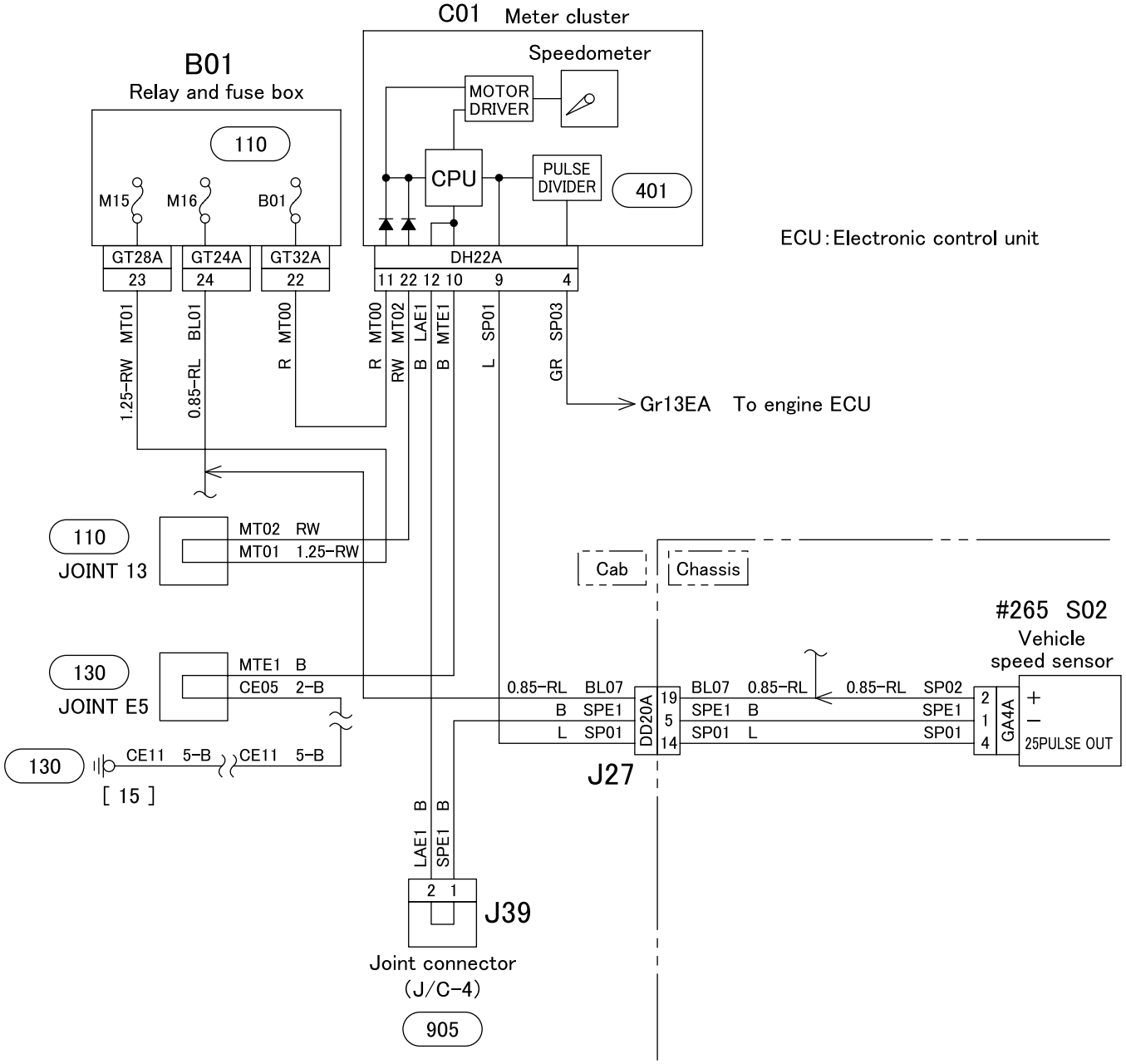

<Automatic transmission (FK)>

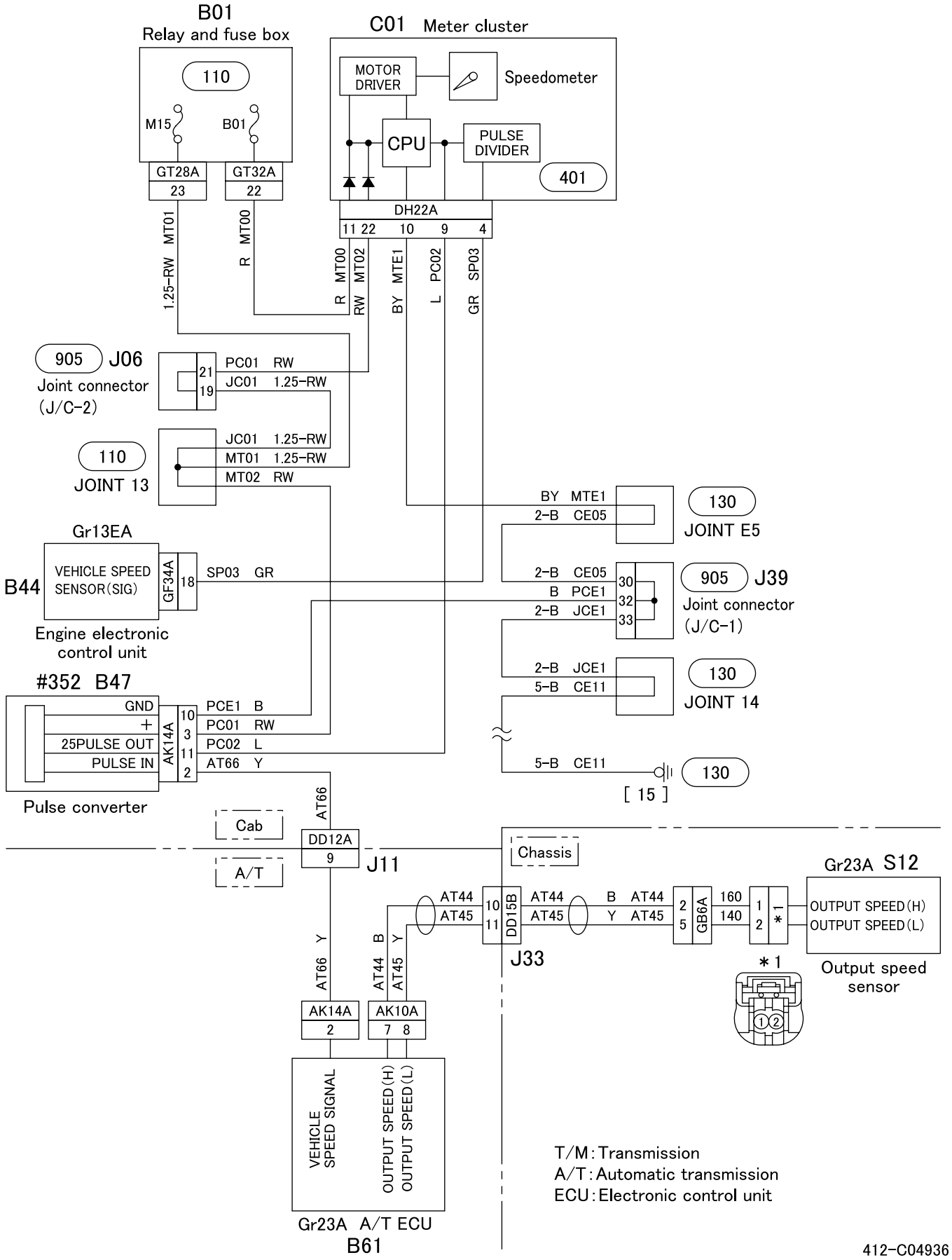

412-C04936

＜Automatic transmission (FM)＞

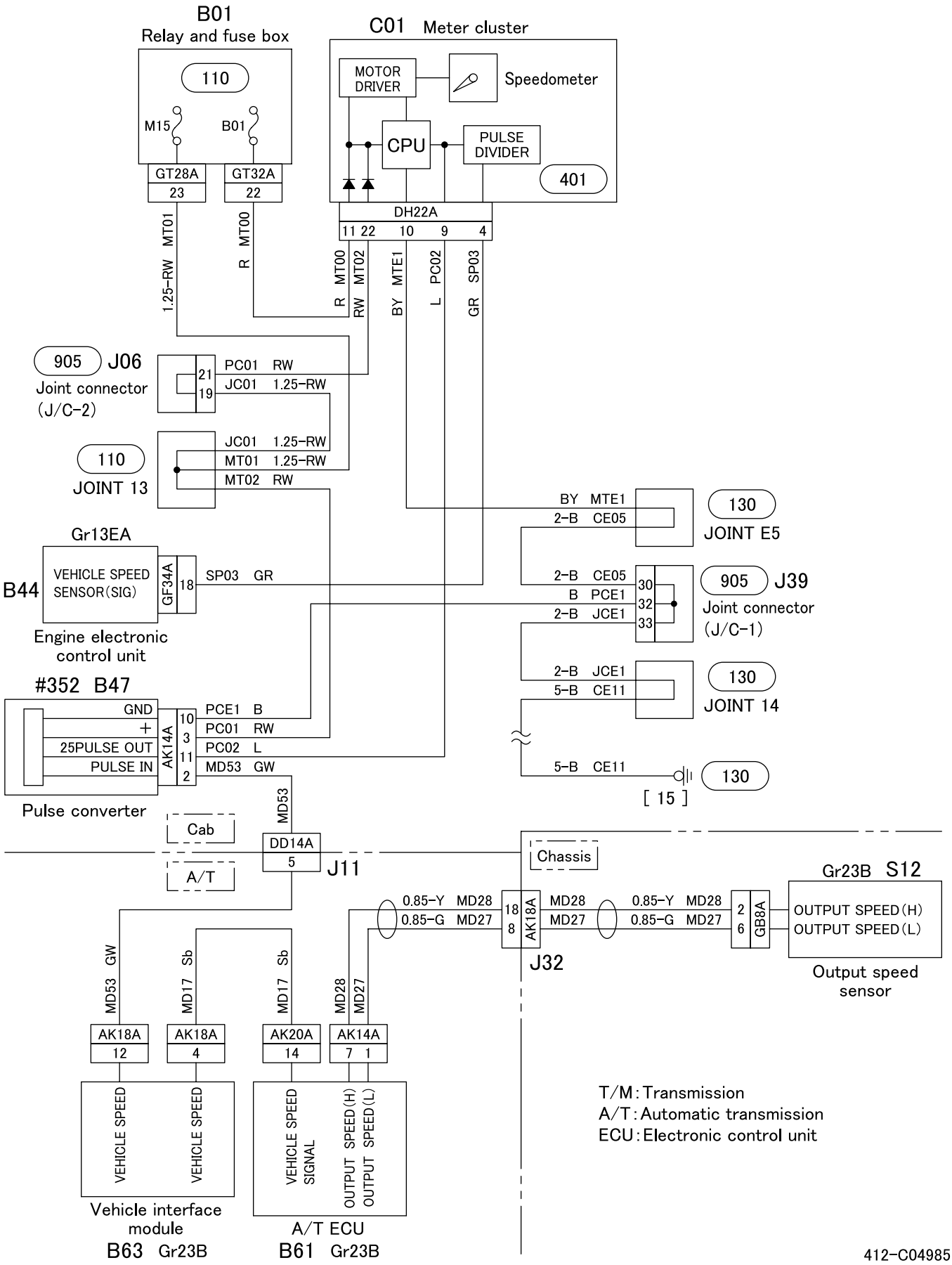

412-C04985

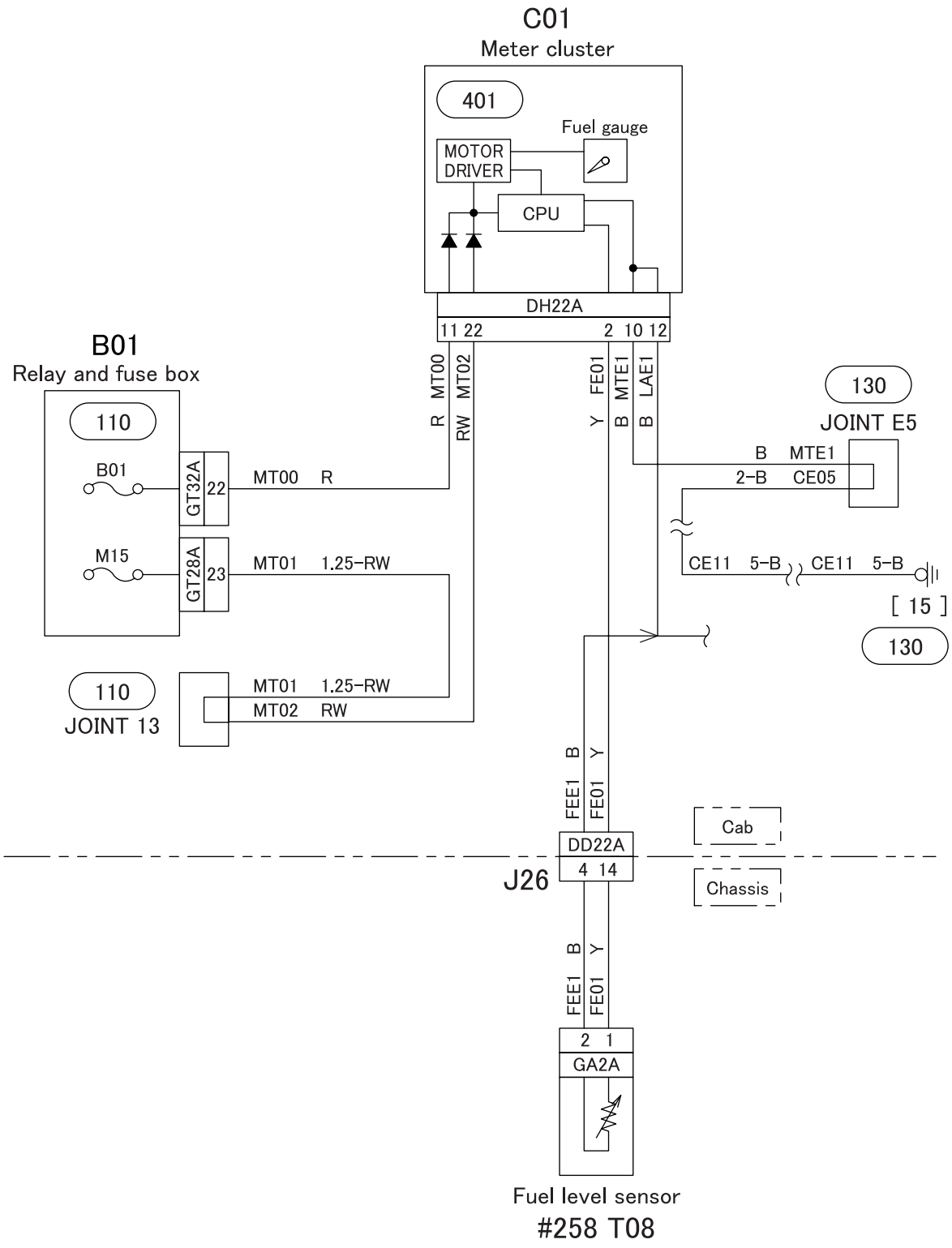
C01
Meter cluster
401
Fuel gauge
MOTOR DRIVER
CPU
DH22A
11 22
2 10 12
B01
Relay and fuse box
110
B01
GT32A
22
MT00 R
M15
GT28A
23
MT01 1.25-RW
110
JOINT 13
MT01 1.25-RW
MT02 RW
R MT00
RW MT02
Y FE01
B MTE1
B LAE1
130
JOINT E5
B MTE1
2-B CE05
CE11 5-B
CE11 5-B
[15]
130
B FEE1
Y FE01
Cab
DD22A
4 14
J26
Chassis
B FEE1
Y FE01
2 1
GA2A
Fuel level sensor
#258 T08

420-C04112

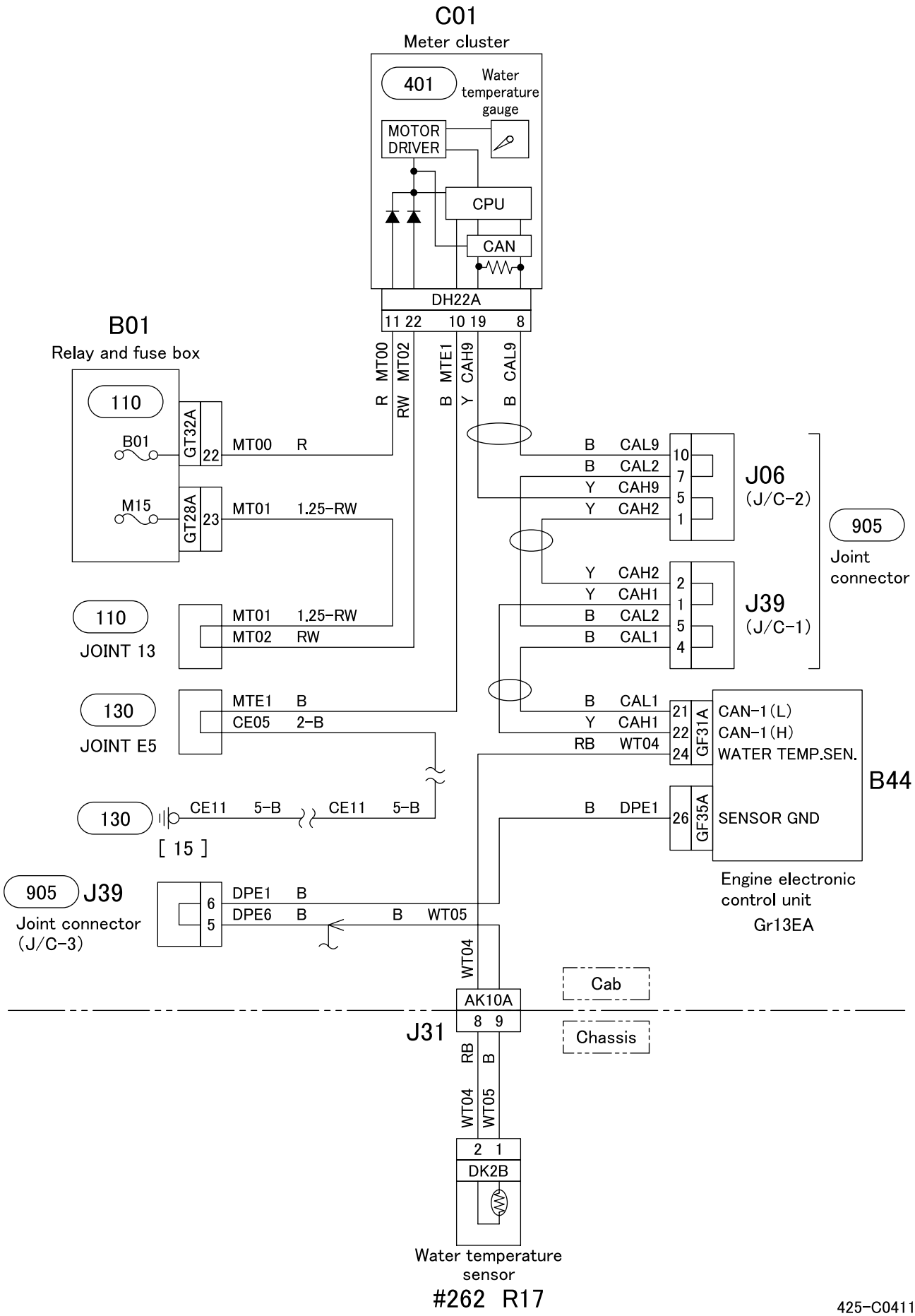
C01
Meter cluster
401
Water temperature gauge
MOTOR DRIVER
CPU
CAN
DH22A
11 22 10 19 8
B01
Relay and fuse box
110
B01
GT32A
22
MT00 R
M15
GT28A
23
MT01 1.25-RW
110
JOINT 13
MT01 1.25-RW
MT02 RW
130
JOINT E5
MTE1 B
CE05 2-B
130
CE11 5-B CE11 5-B
[15]
905
J39
Joint connector (J/C-3)
6
5
DPE1 B
DPE6 B
R MT00
RW MT02
B MTE1
Y CAH9
B CAL9
B CAL9
B CAL2
Y CAH9
Y CAH2
10
7
5
1
J06
(J/C-2)
905
Joint connector
Y CAH2
Y CAH1
B CAL2
B CAL1
2
1
5
4
J39
(J/C-1)
B CAL1
Y CAH1
RB WT04
21
22
24
GF31A
CAN-1(L)
CAN-1(H)
WATER TEMP.SEN.
B44
B DPE1
26
GF35A
SENSOR GND
Engine electronic control unit
Gr13EA
B WT05
WT04
Cab
AK10A
8 9
J31
Chassis
RB
B
WT04
WT05
2 1
DK2B
Water temperature sensor
#262 R17

425-C04113

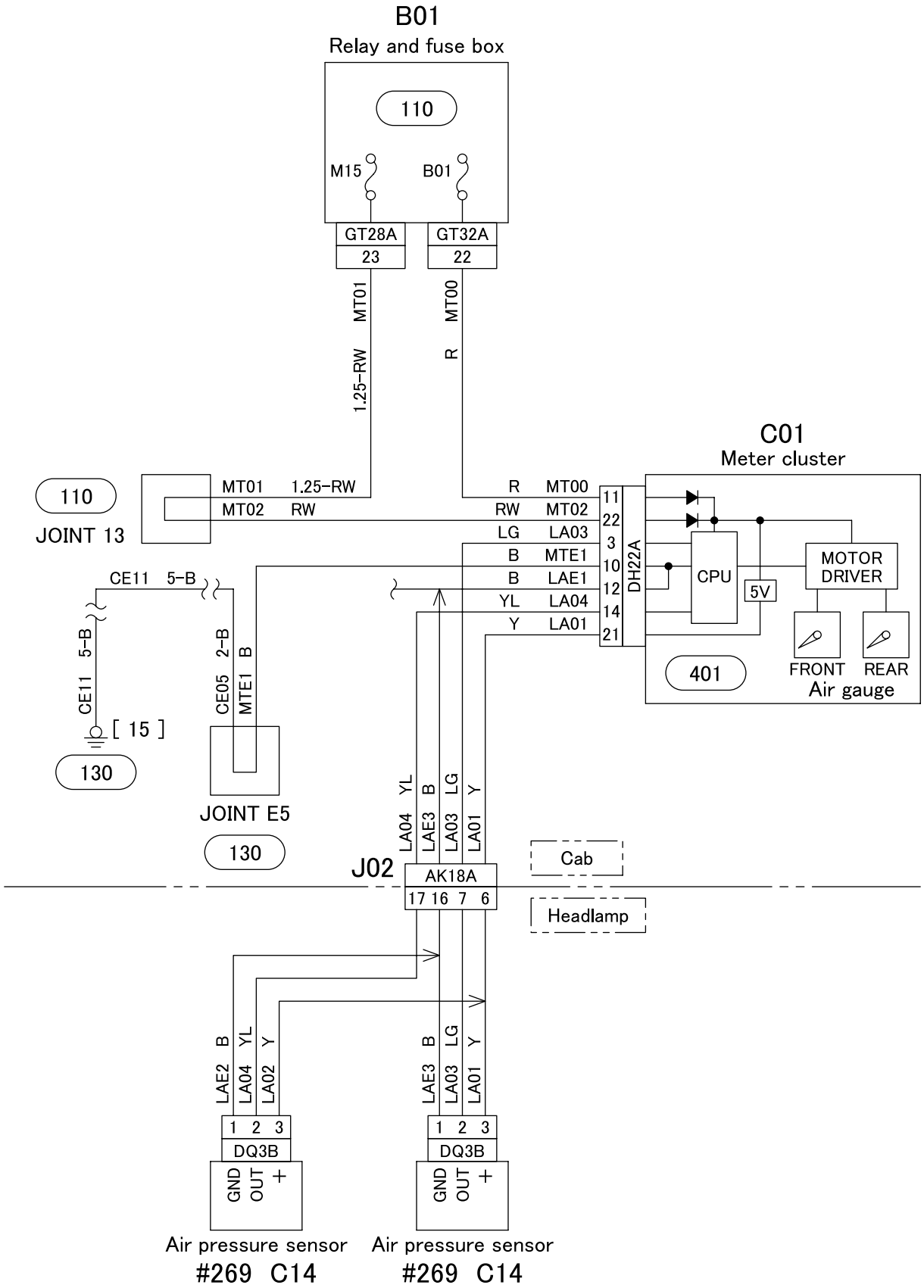
B01
Relay and fuse box
110
M15
B01
GT28A
23
GT32A
22
MT01
1.25-RW
MT00
R
C01
Meter cluster
110
JOINT 13
MT01 1.25-RW
MT02 RW
R MT00
RW MT02
LG LA03
B MTE1
B LAE1
YL LA04
Y LA01
11
22
3
10
12
14
21
DH22A
CPU
5V
MOTOR DRIVER
FRONT
REAR
Air gauge
401
CE11 5-B
CE11 5-B
[15]
130
CE05 2-B
MTE1 B
JOINT E5
130
YL B LG Y
LA04 LAE3 LA03 LA01
J02
AK18A
17 16 7 6
Cab
Headlamp
B YL Y
LAE2 LA04 LA02
B LG Y
LAE3 LA03 LA01
1 2 3
DQ3B
GND OUT +
Air pressure sensor
#269 C14
Air pressure sensor
#269 C14

436-C04114

54-05 INDICATOR AND WARNING LAMP CIRCUIT

510 PARKING BRAKE INDICATOR CIRCUIT

＜Center parking brake＞

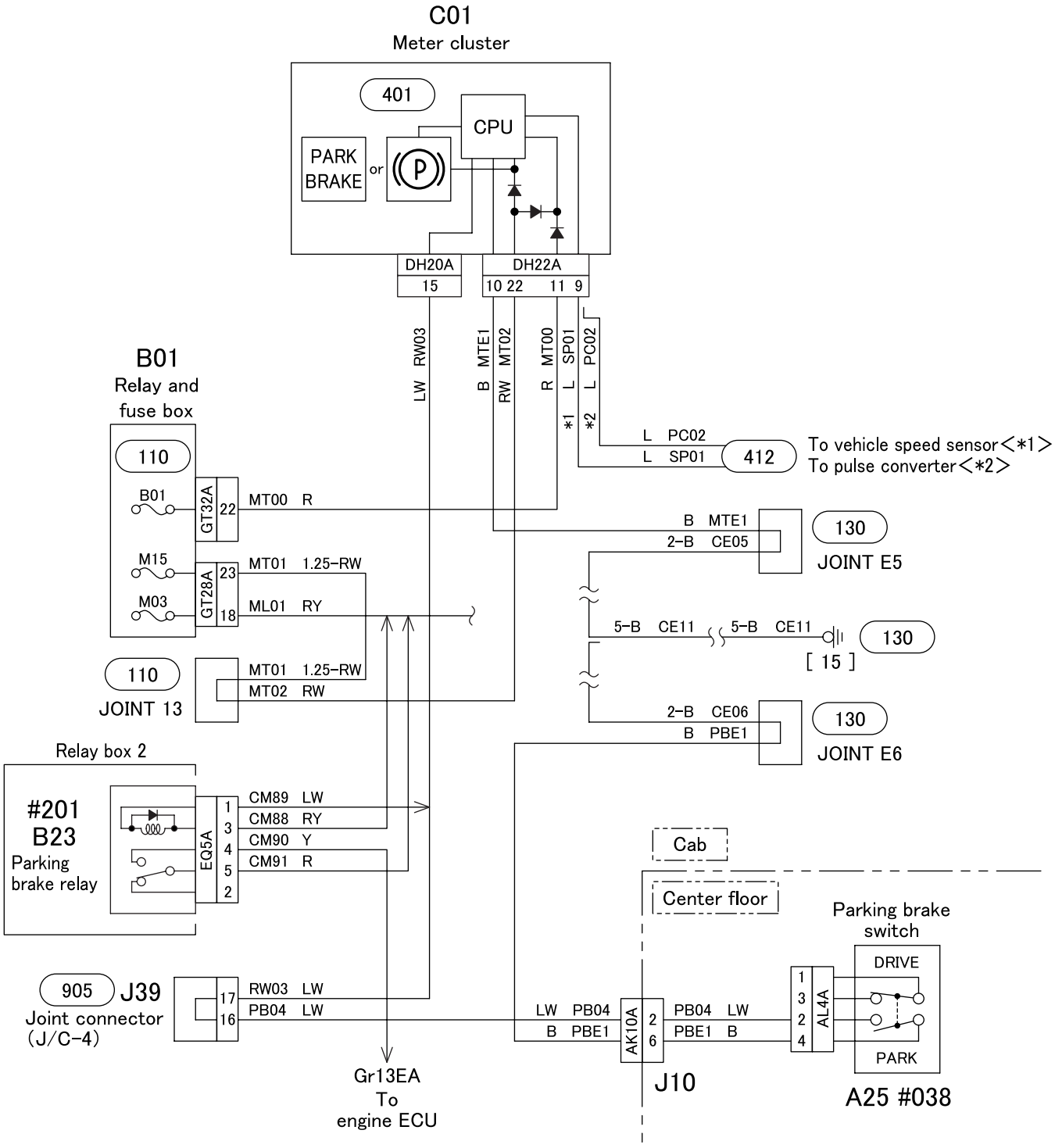

＊1：Manual transmission
＊2：Automatic transmission

ECU：Electronic control unit

510-C04115

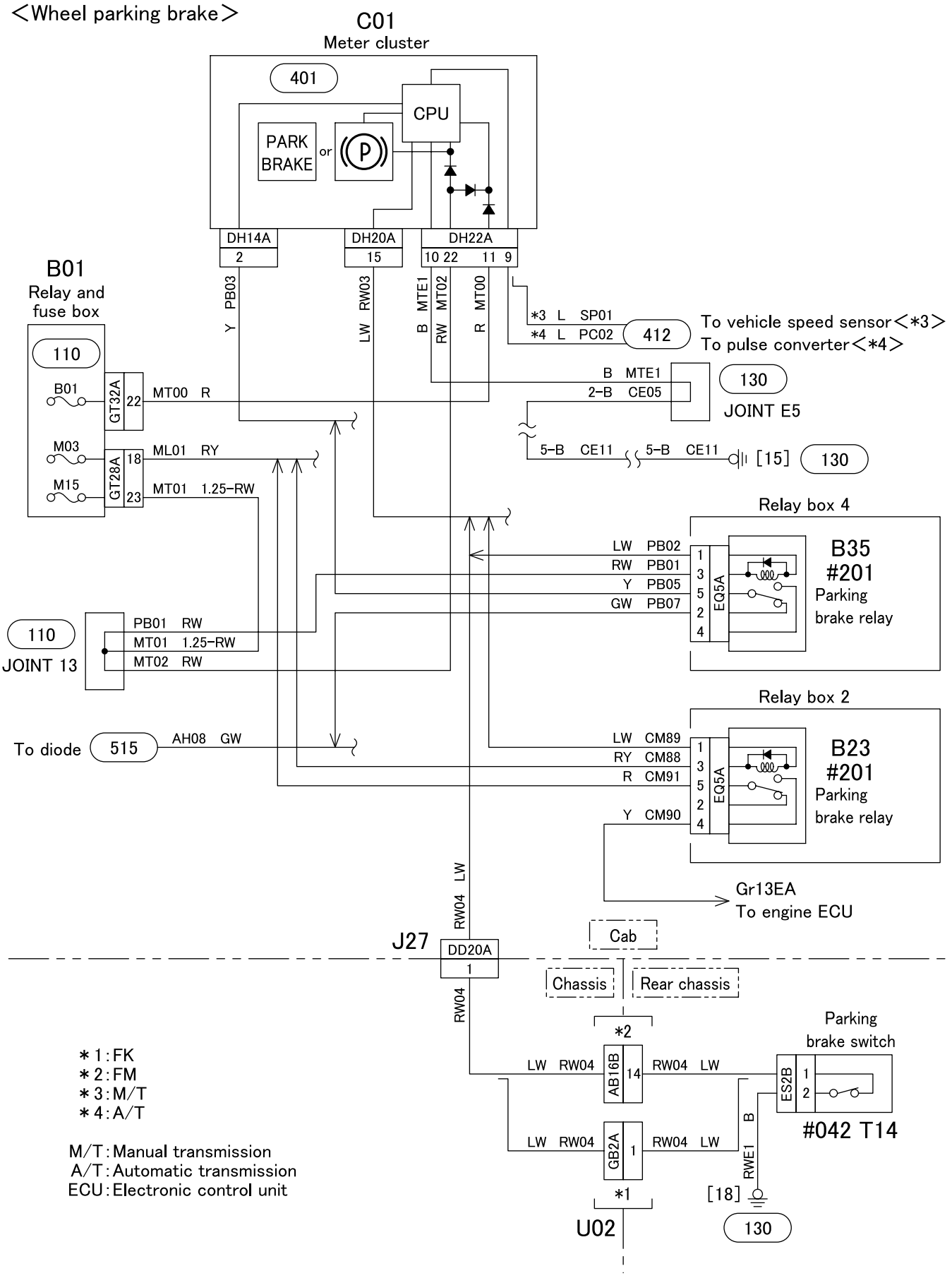
<Wheel parking brake>
C01
Meter cluster
401
CPU
PARK BRAKE
or
P
DH14A
2
DH20A
15
DH22A
10 22 11 9
B01
Relay and fuse box
110
B01
GT32A
22
MT00 R
M03
M15
GT28A
18
23
ML01 RY
MT01 1.25-RW
Y PB03
LW RW03
B MTE1
RW MT02
R MT00
*3 L SP01
*4 L PC02
412
To vehicle speed sensor<*3>
To pulse converter<*4>
B MTE1
2-B CE05
130
JOINT E5
5-B CE11
5-B CE11
[15]
130
Relay box 4
LW PB02
RW PB01
Y PB05
GW PB07
EQ5A
B35
#201
Parking brake relay
110
JOINT 13
PB01 RW
MT01 1.25-RW
MT02 RW
To diode
515
AH08 GW
Relay box 2
LW CM89
RY CM88
R CM91
Y CM90
EQ5A
B23
#201
Parking brake relay
Gr13EA
To engine ECU
RW04 LW
J27
DD20A
1
Cab
Chassis
Rear chassis
RW04
*2
LW RW04
AB16B
14
RW04 LW
Parking brake switch
ES2B
1
2
#042 T14
LW RW04
GB2A
1
RW04 LW
B
RWE1
[18]
*1
U02
130
*1:FK
*2:FM
*3:M/T
*4:A/T
M/T:Manual transmission
A/T:Automatic transmission
ECU:Electronic control unit

510-C04116

515 BRAKE WARNING CIRCUIT

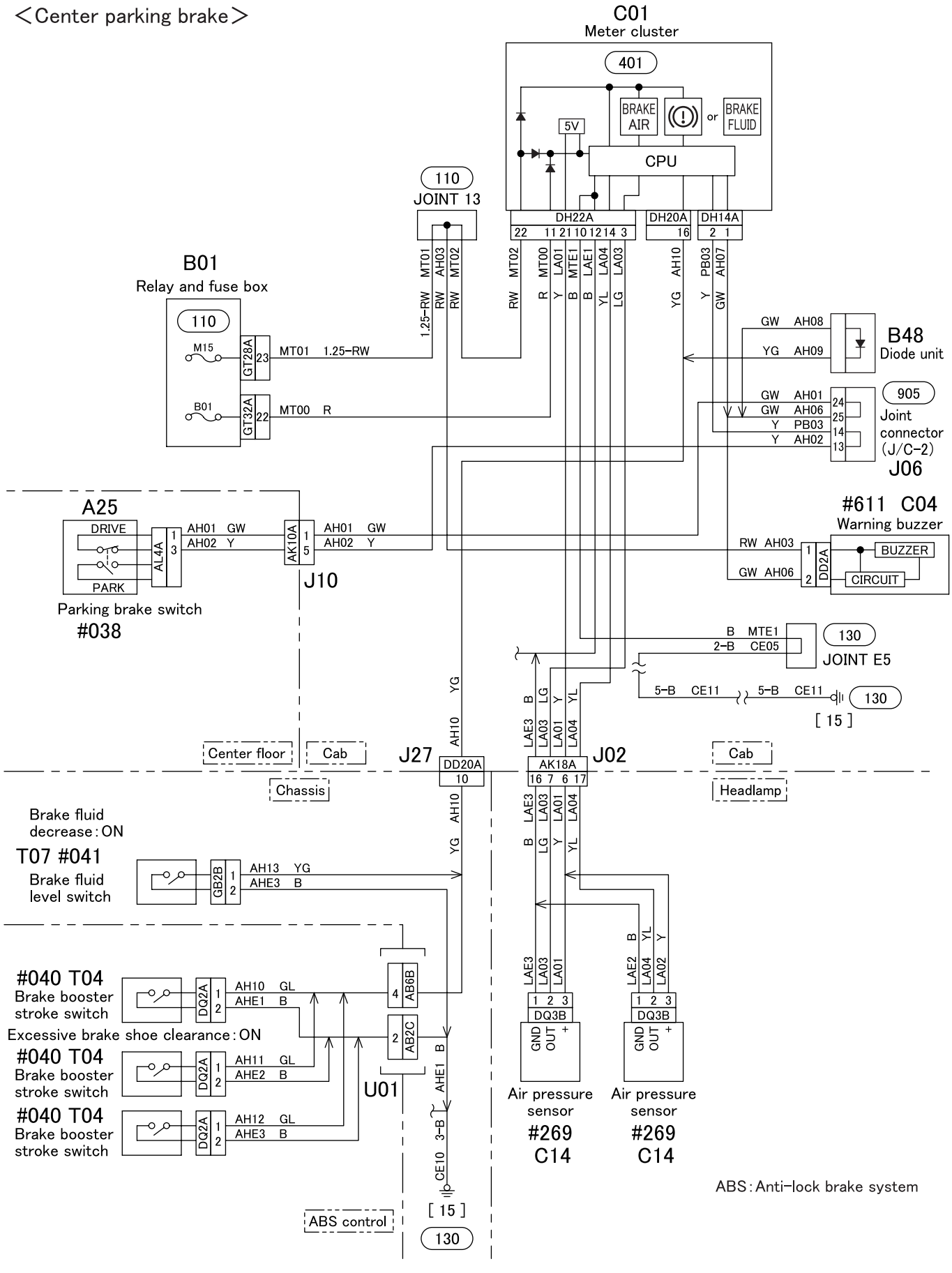

515-C04117

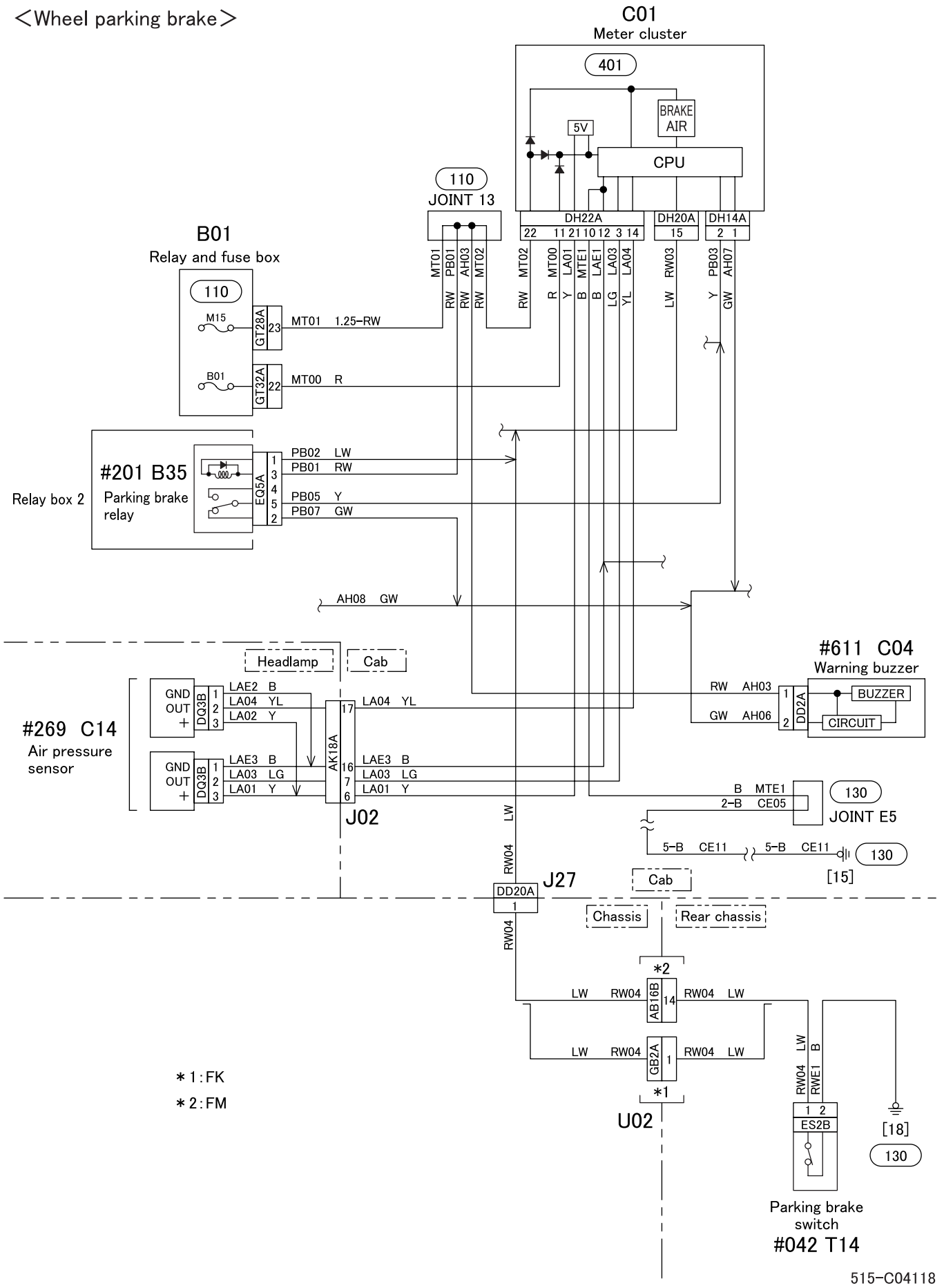
＜Wheel parking brake＞
C01
Meter cluster
401
BRAKE AIR
5V
CPU
DH22A
22 11 21 10 12 3 14
DH20A
15
DH14A
2 1
110
JOINT 13
B01
Relay and fuse box
110
M15
GT28A
23
MT01 1.25-RW
B01
GT32A
22
MT00 R
#201 B35
Parking brake relay
Relay box 2
EQ5A
PB02 LW
PB01 RW
PB05 Y
PB07 GW
AH08 GW
MT01 RW
PB01 RW
AH03 RW
MT02 RW
MT02 RW
MT00 R
LA01 Y
MTE1 B
LAE1 B
LA03 LG
LA04 YL
RW03 LW
PB03 Y
AH07 GW
Headlamp
Cab
#269 C14
Air pressure sensor
GND
OUT
+
DQ3B
LAE2 B
LA04 YL
LA02 Y
LAE3 B
LA03 LG
LA01 Y
AK18A
17
16
7
6
LA04 YL
LAE3 B
LA03 LG
LA01 Y
J02
#611 C04
Warning buzzer
RW AH03
GW AH06
DD2A
BUZZER
CIRCUIT
B MTE1
2-B CE05
130
JOINT E5
5-B CE11
5-B CE11
130
[15]
LW
RW04
J27
Cab
DD20A
1
Chassis
Rear chassis
RW04
*2
LW RW04
AB16B
14
RW04 LW
LW RW04
GB2A
1
RW04 LW
*1
U02
RW04 LW
RWE1 B
1 2
ES2B
[18]
130
Parking brake switch
#042 T14
*1 : FK
*2 : FM

515-C04118

530 WATER LEVEL AND OVERHEATING WARNING CIRCUIT

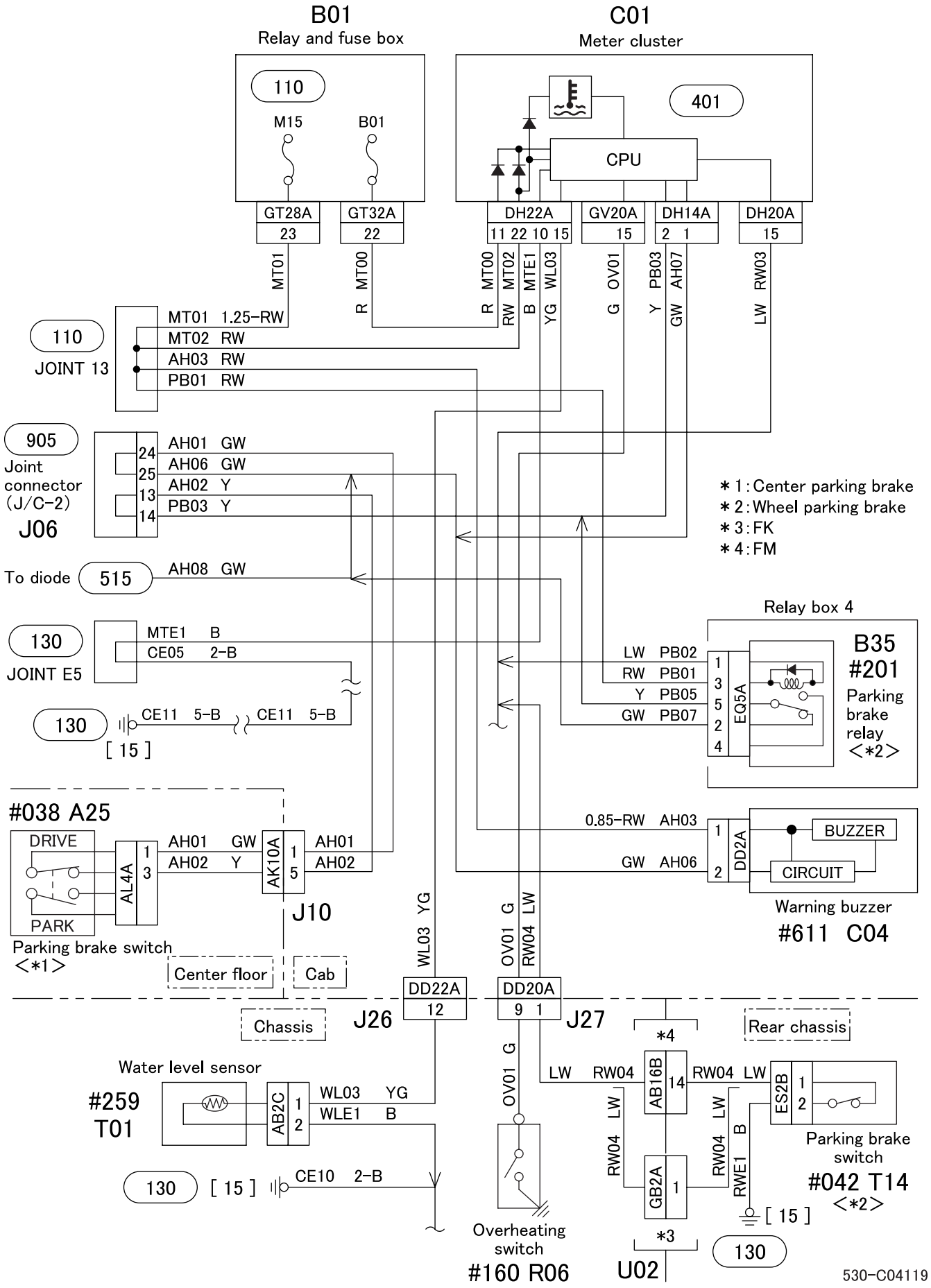

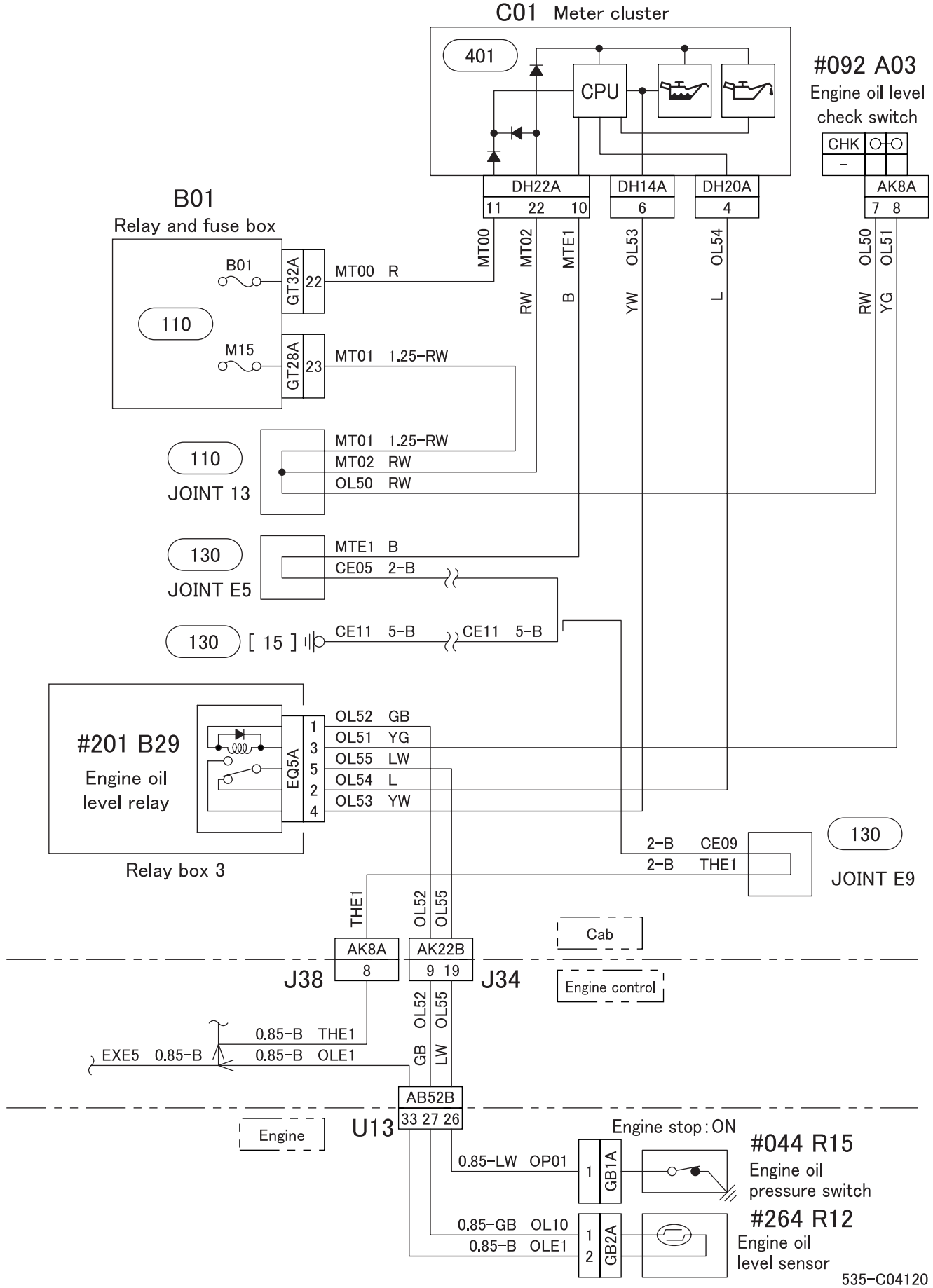
C01 Meter cluster
401
CPU
DH22A
11 22 10
DH14A
6
DH20A
4
#092 A03
Engine oil level check switch
CHK
–
AK8A
7 8
B01
Relay and fuse box
B01
GT32A
22
MT00 R
110
M15
GT28A
23
MT01 1.25-RW
MT00
MT02
MTE1
OL53
OL54
OL50
OL51
RW
B
YW
L
RW
YG
110
JOINT 13
MT01 1.25-RW
MT02 RW
OL50 RW
130
JOINT E5
MTE1 B
CE05 2-B
130
[15]
CE11 5-B
CE11 5-B
#201 B29
Engine oil level relay
EQ5A
1
3
5
2
4
OL52 GB
OL51 YG
OL55 LW
OL54 L
OL53 YW
Relay box 3
2-B CE09
2-B THE1
130
JOINT E9
THE1
OL52
OL55
AK8A
8
AK22B
9 19
Cab
J38
J34
Engine control
0.85-B THE1
EXE5 0.85-B
0.85-B OLE1
GB
OL52
LW
OL55
AB52B
33 27 26
Engine
U13
Engine stop : ON
0.85-LW OP01
1
GB1A
#044 R15
Engine oil pressure switch
0.85-GB OL10
0.85-B OLE1
1
2
GB2A
#264 R12
Engine oil level sensor

535-C04120

536 ENGINE OIL PRESSURE WARNING CIRCUIT

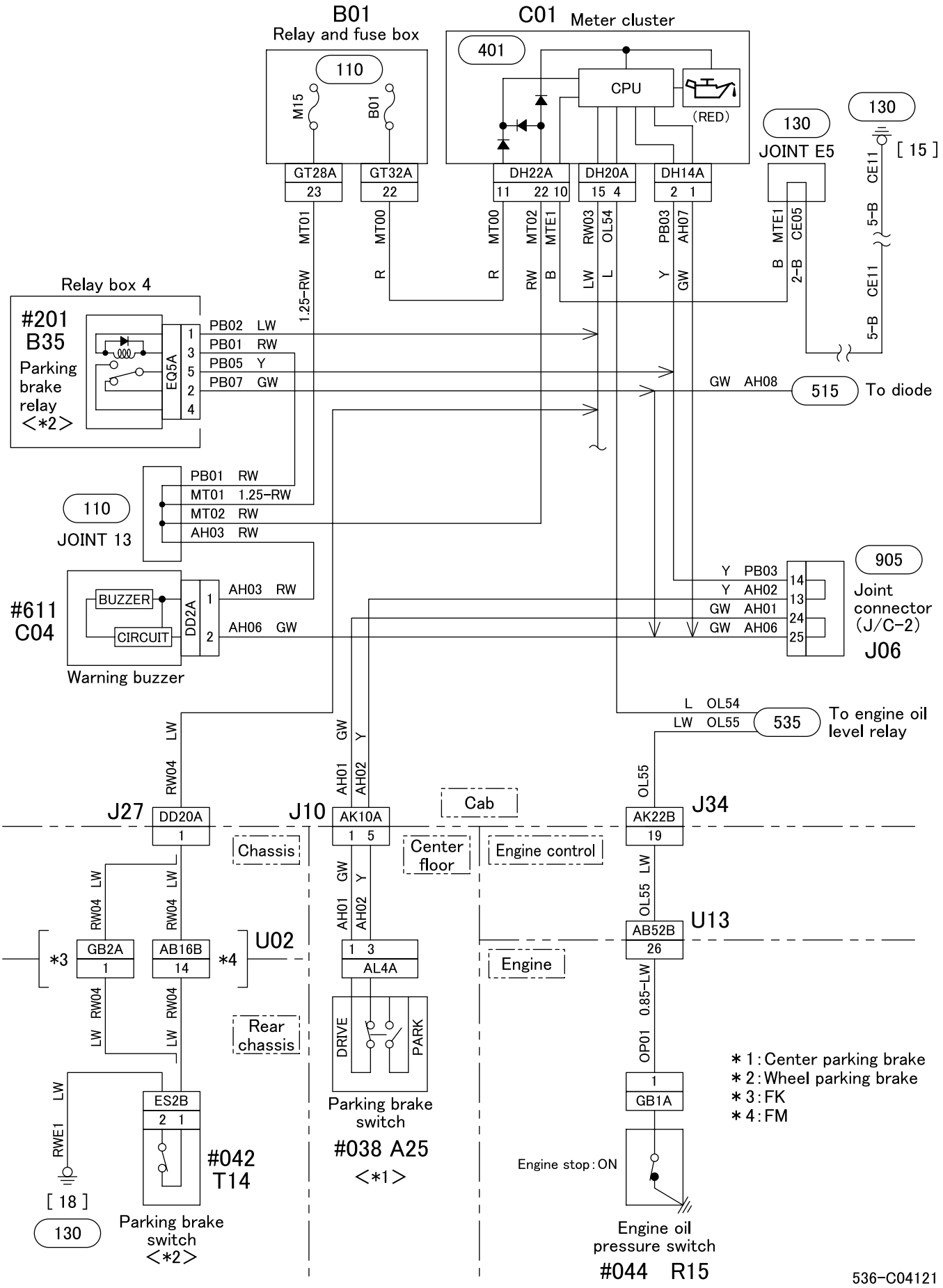

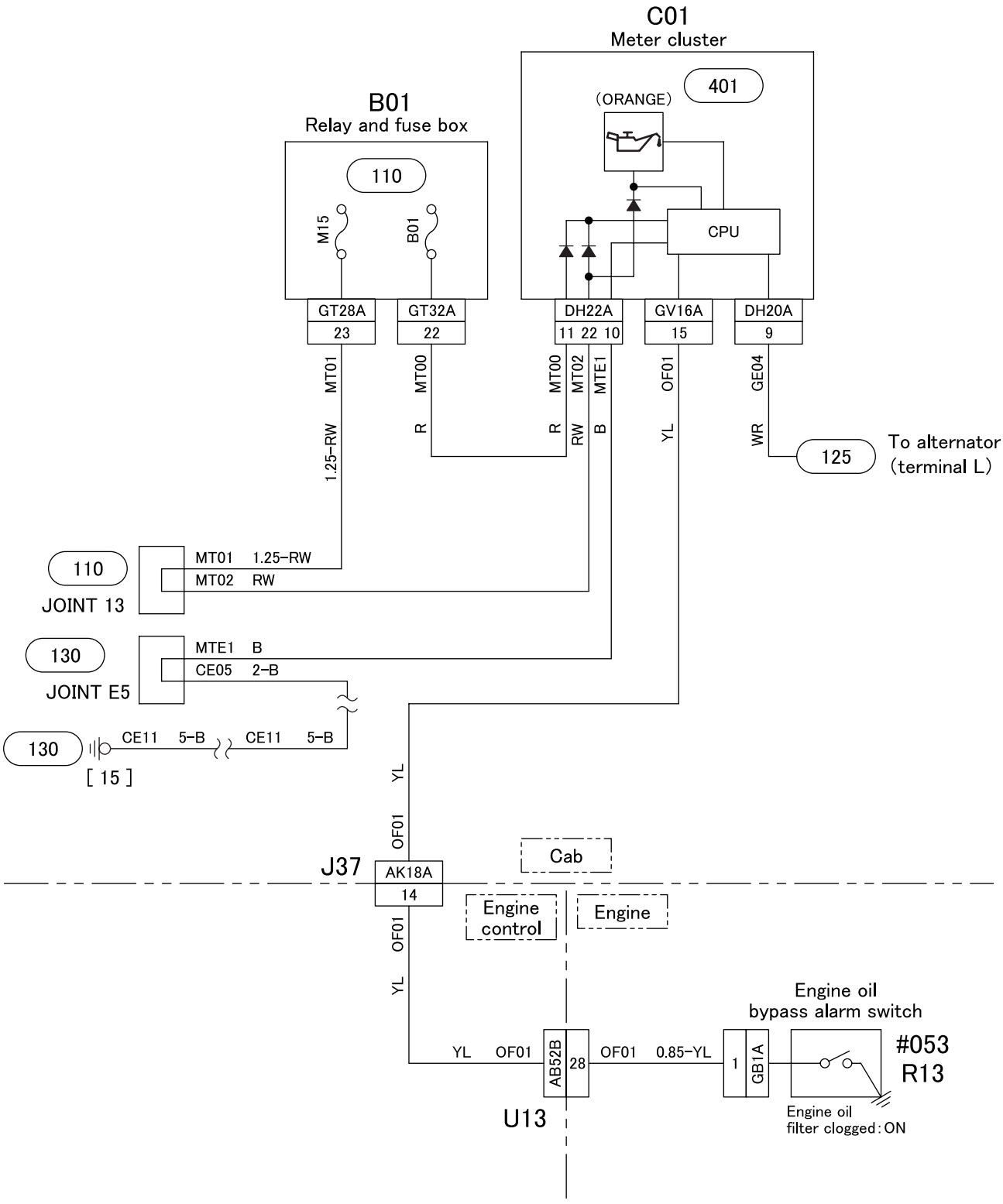
C01
Meter cluster
401
(ORANGE)
CPU
B01
Relay and fuse box
110
M15
B01
GT28A
23
GT32A
22
DH22A
11 22 10
GV16A
15
DH20A
9
MT01
1.25-RW
MT00
R
MT00
R
MT02
RW
MTE1
B
OF01
YL
GE04
WR
125
To alternator
(terminal L)
110
JOINT 13
MT01 1.25-RW
MT02 RW
130
JOINT E5
MTE1 B
CE05 2-B
130
[15]
CE11 5-B
CE11 5-B
YL
OF01
J37
AK18A
14
Cab
Engine control
Engine
OF01
YL
Engine oil
bypass alarm switch
YL OF01
AB52B
28
OF01 0.85-YL
1
GB1A
#053
R13
U13
Engine oil
filter clogged : ON

538-C04122

550 CAB TILT WARNING CIRCUIT

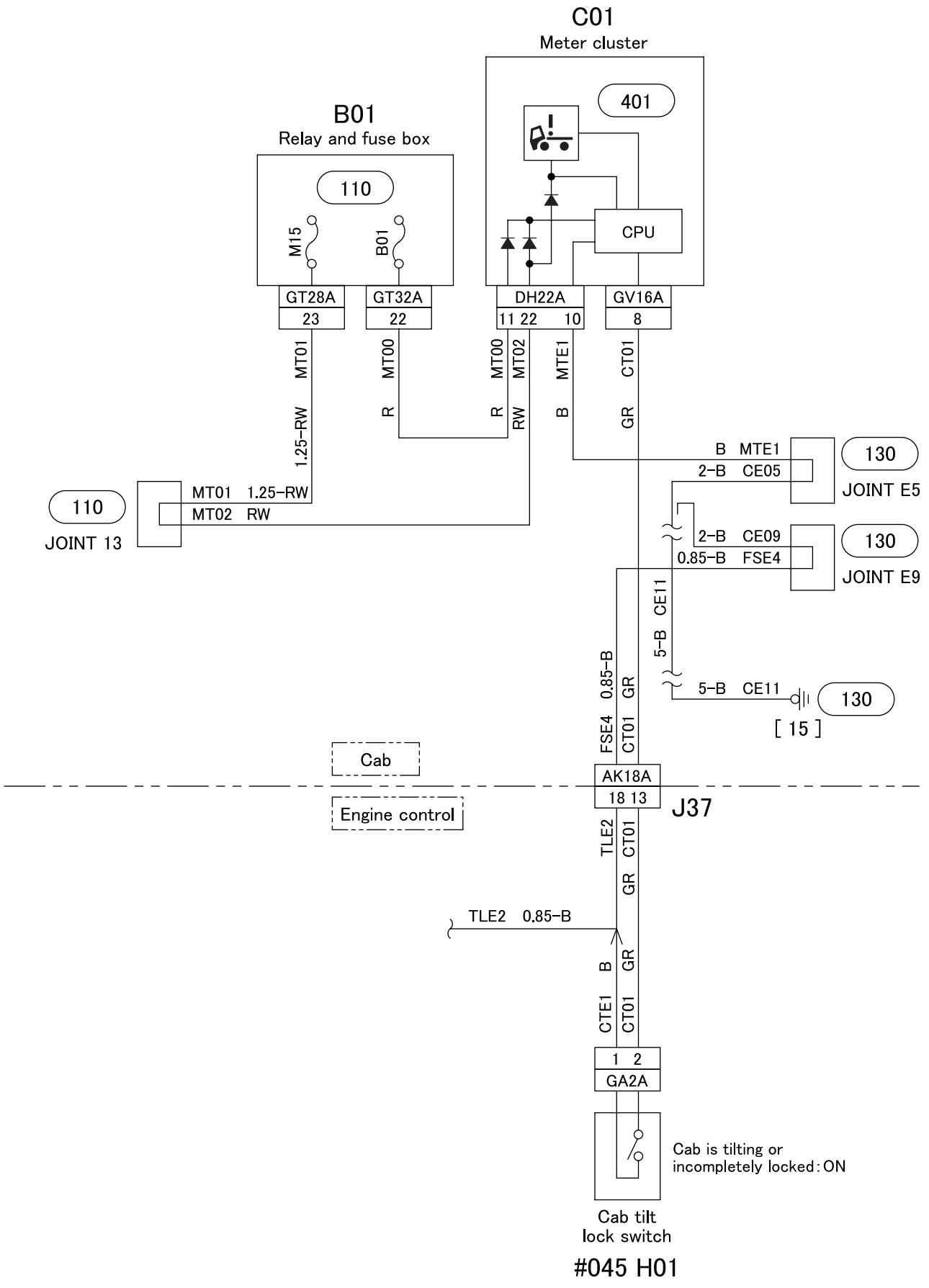

550-C04123

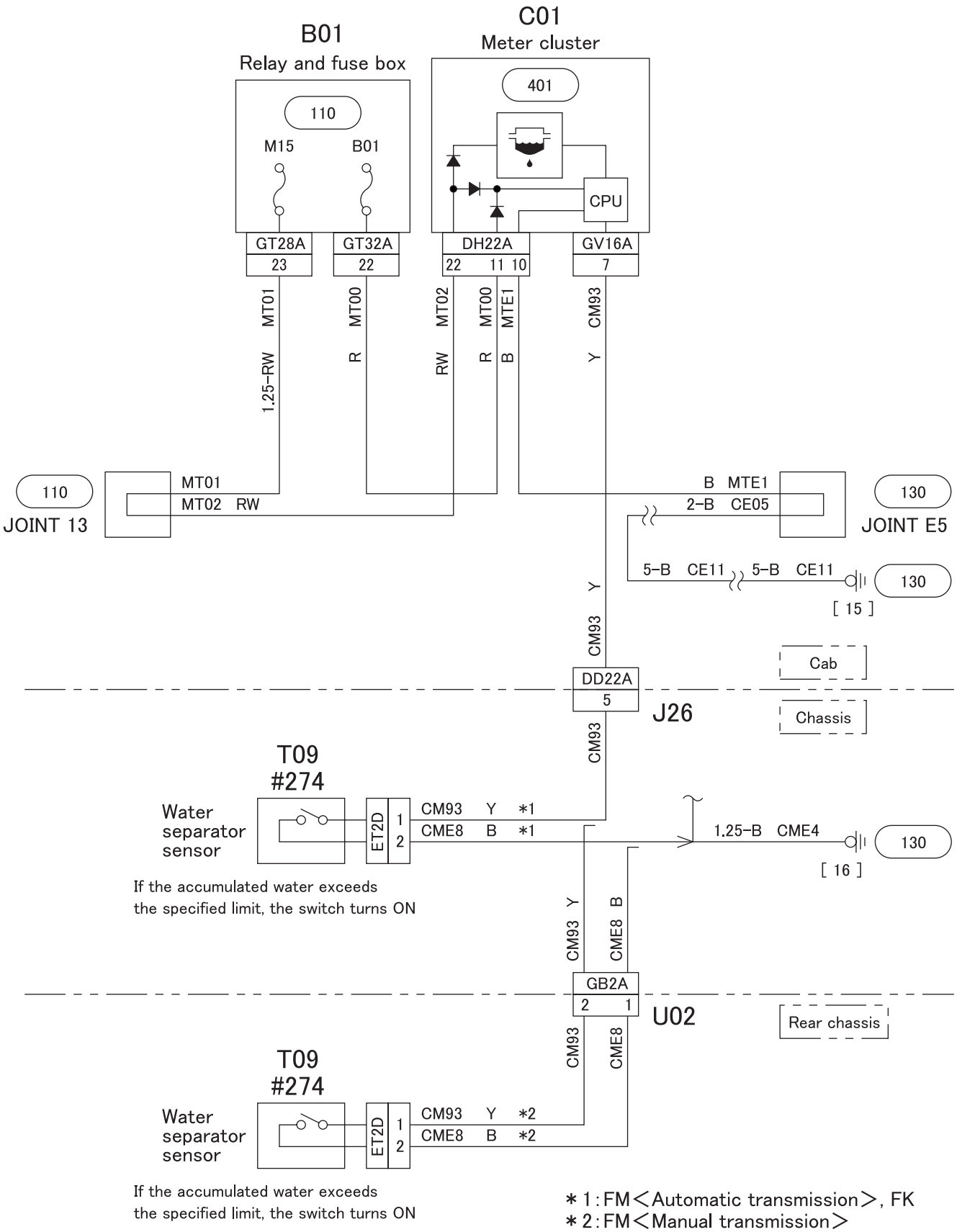
B01
Relay and fuse box
110
M15
B01
GT28A
23
GT32A
22
C01
Meter cluster
401
CPU
DH22A
22 11 10
GV16A
7
MT01
1.25-RW
MT00
R
MT02
RW
MT00
R
MTE1
B
CM93
Y
110
JOINT 13
MT01
MT02 RW
B MTE1
2-B CE05
130
JOINT E5
5-B CE11
5-B CE11
130
[15]
CM93 Y
Cab
DD22A
5
J26
Chassis
CM93
T09
#274
Water
separator
sensor
ET2D
1
2
CM93 Y *1
CME8 B *1
1.25-B CME4
130
[16]
If the accumulated water exceeds
the specified limit, the switch turns ON
CM93 Y
CME8 B
GB2A
2 1
U02
Rear chassis
CM93
CME8
T09
#274
Water
separator
sensor
ET2D
1
2
CM93 Y *2
CME8 B *2
If the accumulated water exceeds
the specified limit, the switch turns ON
*1: FM<Automatic transmission>, FK
*2: FM<Manual transmission>

566-C04124

54-06 CAB SIDE ELECTRICAL CIRCUIT

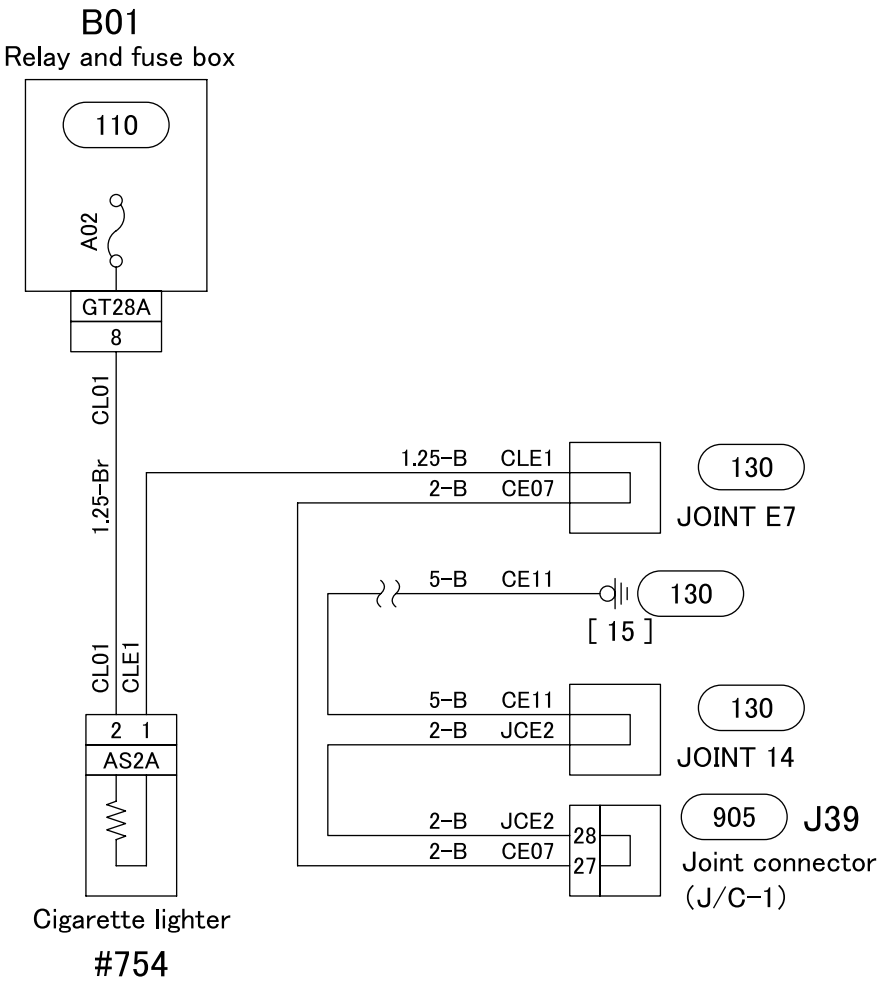
B01
Relay and fuse box
110
A02
GT28A
8
CL01
1.25-Br
CL01
CLE1
2 1
AS2A
Cigarette lighter
#754
1.25-B CLE1
2-B CE07
130
JOINT E7
5-B CE11
130
[15]
5-B CE11
2-B JCE2
130
JOINT 14
2-B JCE2
2-B CE07
28
27
905
J39
Joint connector
(J/C-1)

610-C04125

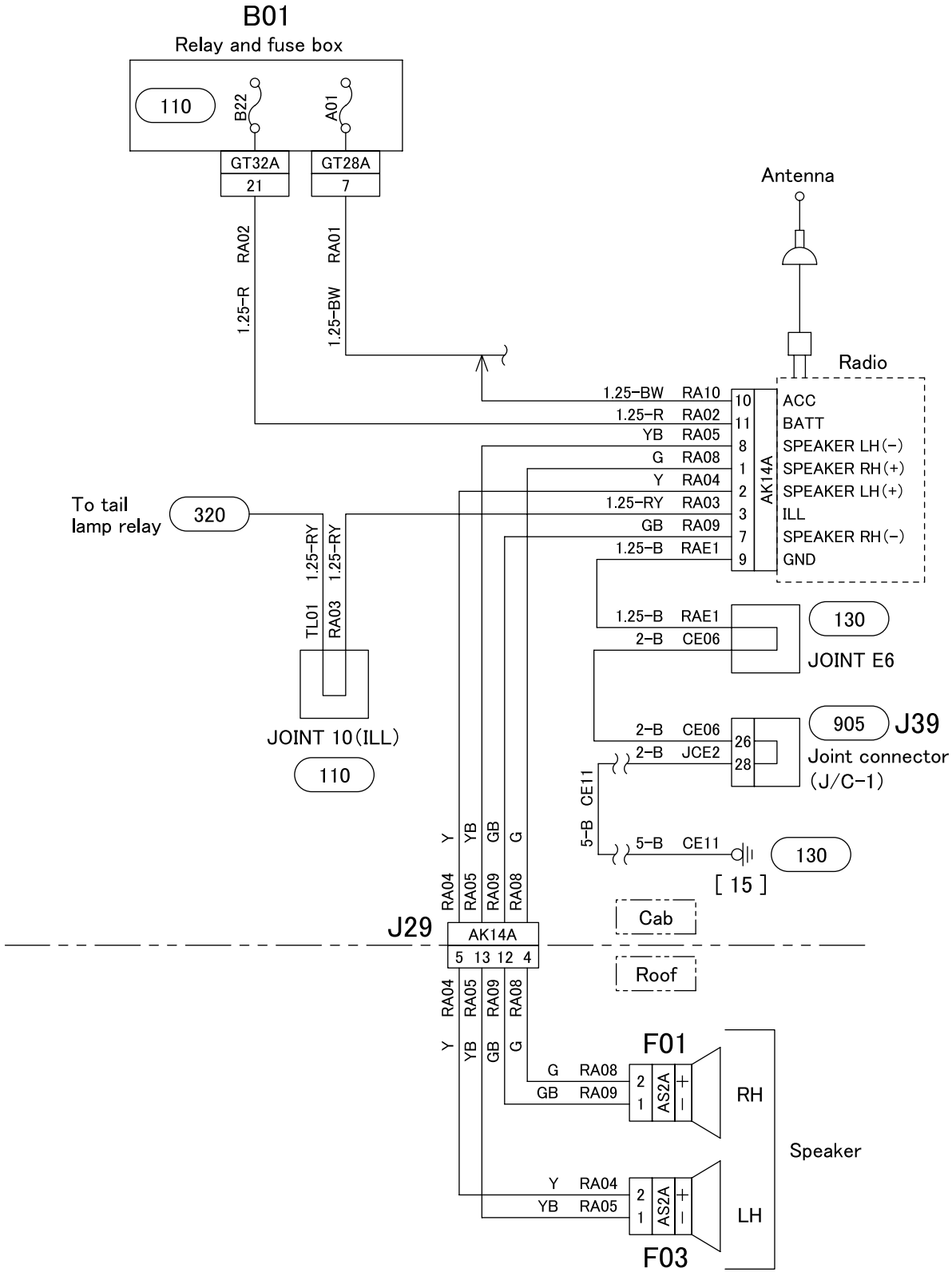
B01
Relay and fuse box
110
B22
A01
GT32A
21
GT28A
7
RA02
1.25-R
RA01
1.25-BW
Antenna
Radio
1.25-BW RA10
1.25-R RA02
YB RA05
G RA08
Y RA04
1.25-RY RA03
GB RA09
1.25-B RAE1
10 ACC
11 BATT
8 SPEAKER LH(-)
1 SPEAKER RH(+)
2 SPEAKER LH(+)
3 ILL
7 SPEAKER RH(-)
9 GND
AK14A
To tail lamp relay
320
1.25-RY
1.25-RY
TL01
RA03
JOINT 10(ILL)
110
1.25-B RAE1
2-B CE06
130
JOINT E6
2-B CE06
2-B JCE2
905
J39
Joint connector (J/C-1)
26
28
5-B CE11
5-B CE11
130
[15]
Y
YB
GB
G
RA04
RA05
RA09
RA08
J29
AK14A
5 13 12 4
Cab
Roof
F01
G RA08
GB RA09
2
1
AS2A
RH
Speaker
Y RA04
YB RA05
LH
F03

612-C04937

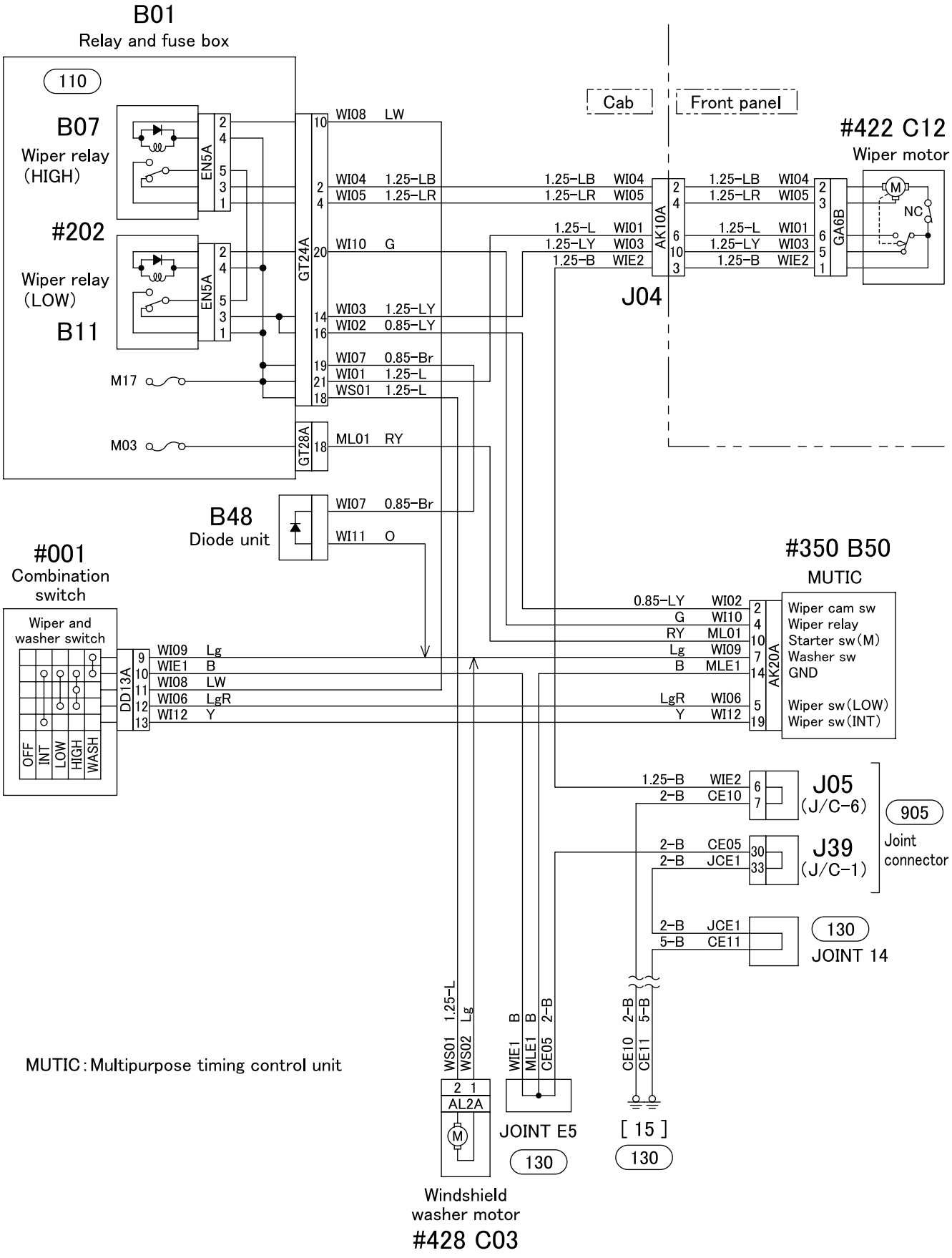
B01
Relay and fuse box
110
B07
Wiper relay
(HIGH)
#202
Wiper relay
(LOW)
B11
EN5A
GT24A
GT28A
M17
M03
WI08 LW
WI04 1.25-LB
WI05 1.25-LR
WI10 G
WI03 1.25-LY
WI02 0.85-LY
WI07 0.85-Br
WI01 1.25-L
WS01 1.25-L
ML01 RY
Cab
Front panel
#422 C12
Wiper motor
NC
AK10A
GA6B
J04
B48
Diode unit
WI11 O
#001
Combination
switch
Wiper and
washer switch
OFF
INT
LOW
HIGH
WASH
DD13A
WI09 Lg
WIE1 B
WI08 LW
WI06 LgR
WI12 Y
#350 B50
MUTIC
Wiper cam sw
Wiper relay
Starter sw(M)
Washer sw
GND
Wiper sw(LOW)
Wiper sw(INT)
AK20A
WI02 0.85-LY
WI10 G
ML01 RY
WI09 Lg
MLE1 B
WI06 LgR
WI12 Y
J05
(J/C-6)
WIE2 1.25-B
CE10 2-B
905
Joint
connector
J39
(J/C-1)
CE05 2-B
JCE1 2-B
130
JOINT 14
CE11 5-B
WS01 1.25-L
WS02 Lg
WIE1 B
MLE1 B
CE05 2-B
CE10 2-B
CE11 5-B
AL2A
JOINT E5
130
[15]
130
Windshield
washer motor
#428 C03
MUTIC : Multipurpose timing control unit

614-C04127

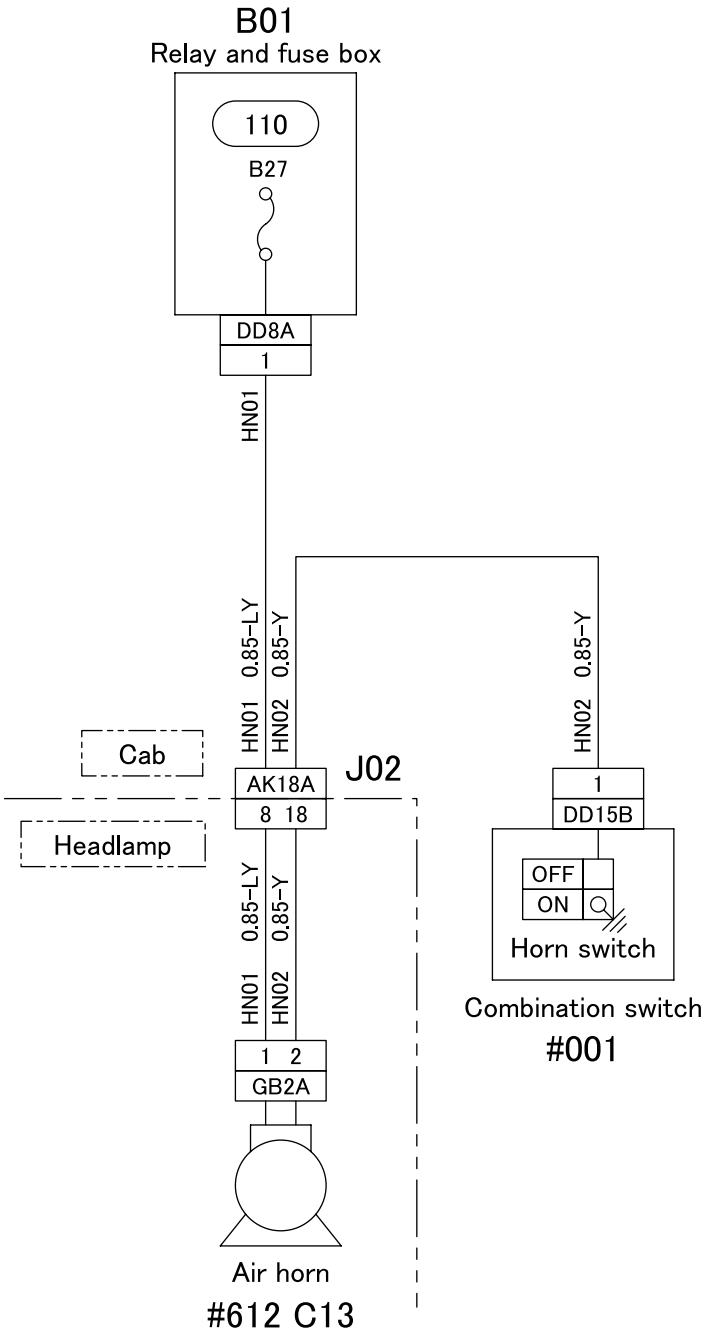
B01
Relay and fuse box
110
B27
DD8A
1
HN01
0.85-LY
HN01
0.85-Y
HN02
HN02
0.85-Y
Cab
J02
AK18A
8 18
Headlamp
1
DD15B
OFF
ON
Horn switch
Combination switch
#001
0.85-LY
HN01
0.85-Y
HN02
1 2
GB2A
Air horn
#612 C13

616-C04128

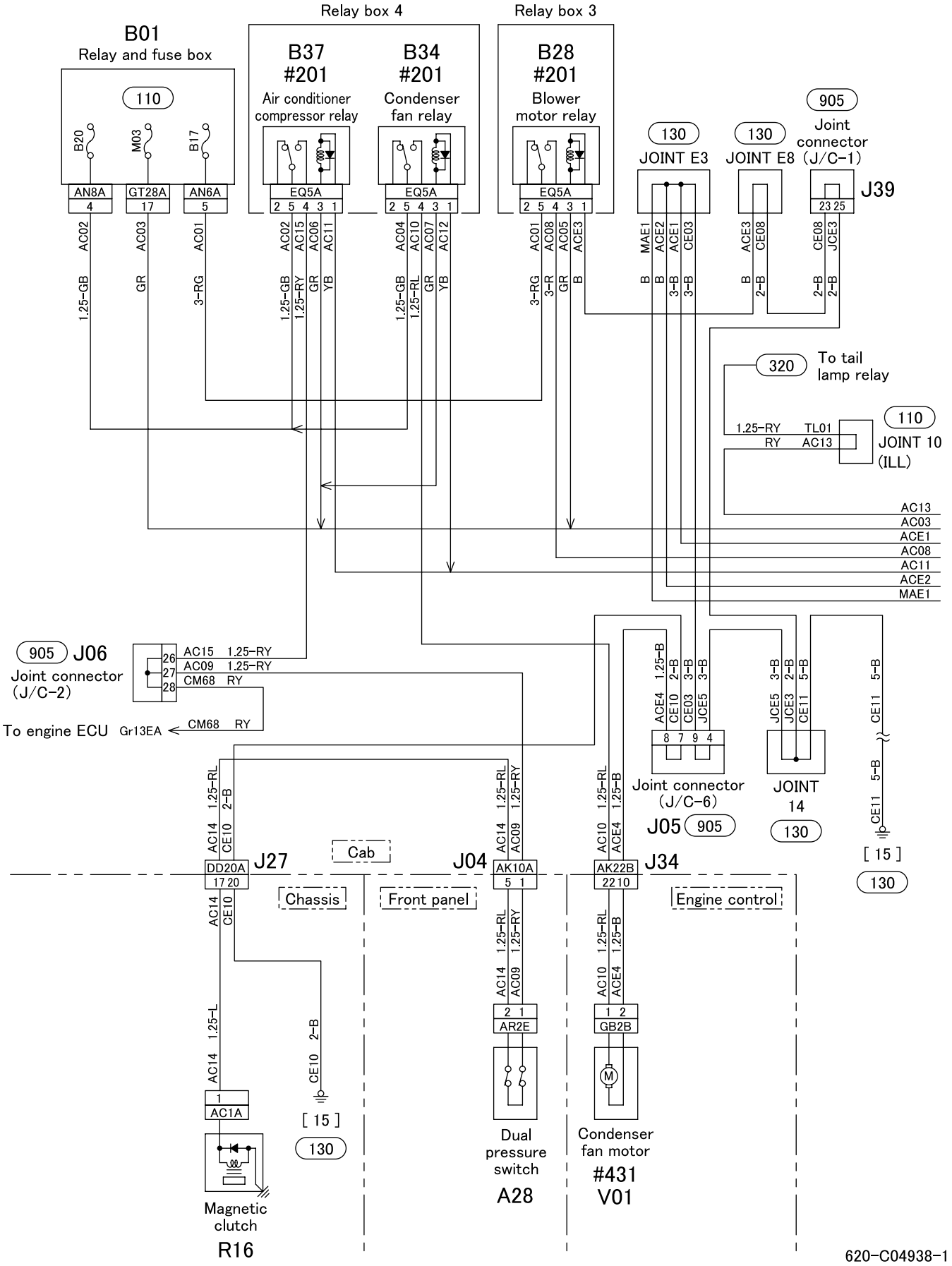
B01
Relay and fuse box
110
B20
M03
B17
AN8A 4
GT28A 17
AN6A 5
Relay box 4
B37
#201
Air conditioner compressor relay
B34
#201
Condenser fan relay
EQ5A
2 5 4 3 1
Relay box 3
B28
#201
Blower motor relay
130
JOINT E3
130
JOINT E8 (J/C-1)
905
Joint connector
J39
23 25
320
To tail lamp relay
110
JOINT 10 (ILL)
1.25-RY TL01
RY AC13
AC13
AC03
ACE1
AC08
AC11
ACE2
MAE1
905 J06
Joint connector (J/C-2)
26 AC15 1.25-RY
27 AC09 1.25-RY
28 CM68 RY
To engine ECU Gr13EA
CM68 RY
Joint connector (J/C-6)
J05 905
8 7 9 4
JOINT 14
130
[15]
130
DD20A 17 20
J27
Cab
J04
AK10A 5 1
AK22B 22 10
J34
Chassis
Front panel
Engine control
AC1A 1
Magnetic clutch
R16
[15]
130
AR2E 2 1
Dual pressure switch
A28
GB2B 1 2
Condenser fan motor
#431
V01
620-C04938-1

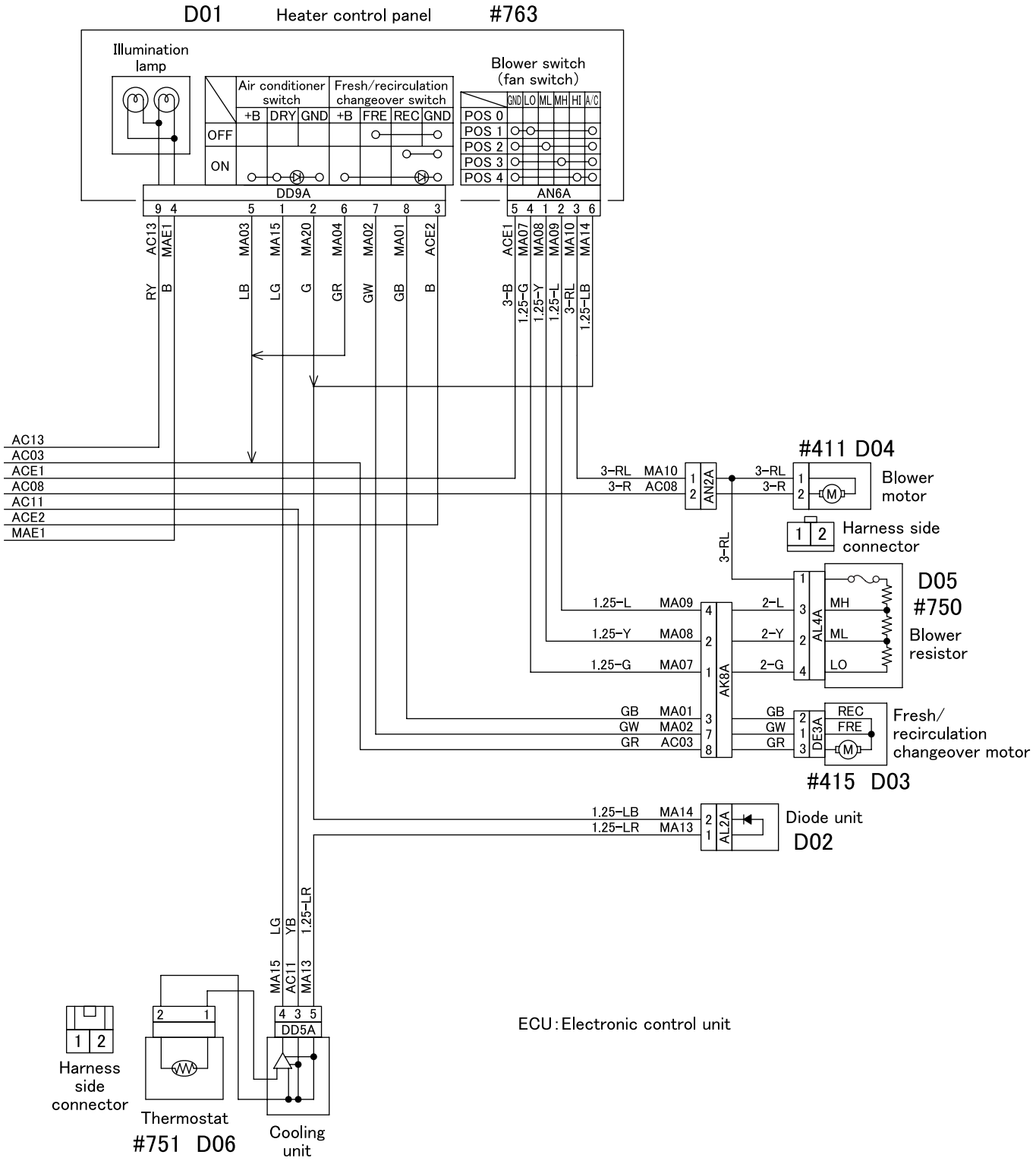
D01 Heater control panel #763
Illumination lamp
Air conditioner switch
+B DRY GND
Fresh/recirculation changeover switch
+B FRE REC GND
OFF
ON
Blower switch (fan switch)
GND LO ML MH HI A/C
POS 0
POS 1
POS 2
POS 3
POS 4
DD9A
AN6A
9 4 5 1 2 6 7 8 3
5 4 1 2 3 6
AC13 MAE1 MA03 MA15 MA20 MA04 MA02 MA01 ACE2 ACE1 MA07 MA08 MA09 MA10 MA14
RY B LB LG G GR GW GB B 3-B 1.25-G 1.25-Y 1.25-L 3-RL 1.25-LB
AC13
AC03
ACE1
AC08
AC11
ACE2
MAE1
#411 D04
3-RL MA10
3-R AC08
AN2A
Blower motor
Harness side connector
D05 #750
Blower resistor
1.25-L MA09
1.25-Y MA08
1.25-G MA07
AK8A
AL4A
MH
ML
LO
GB MA01
GW MA02
GR AC03
DE3A
REC
FRE
Fresh/ recirculation changeover motor
#415 D03
1.25-LB MA14
1.25-LR MA13
AL2A
Diode unit
D02
LG MA15
YB AC11
1.25-LR MA13
DD5A
Harness side connector
Thermostat
#751 D06
Cooling unit
ECU : Electronic control unit

620-C04938-2

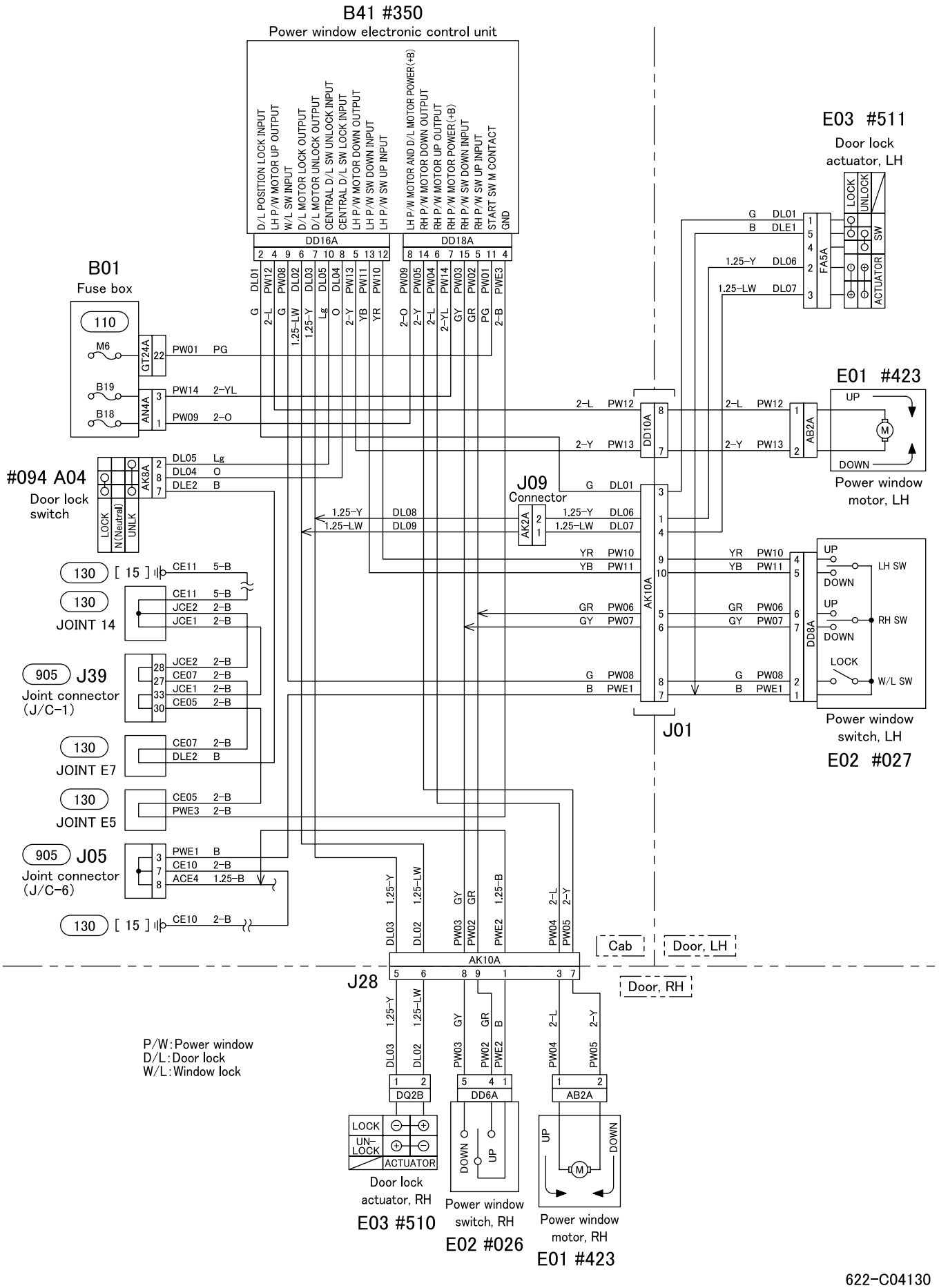
B41 #350
Power window electronic control unit
D/L POSITION LOCK INPUT
LH P/W MOTOR UP OUTPUT
W/L SW INPUT
D/L MOTOR LOCK OUTPUT
D/L MOTOR UNLOCK OUTPUT
CENTRAL D/L SW UNLOCK INPUT
CENTRAL D/L SW LOCK INPUT
LH P/W MOTOR DOWN OUTPUT
LH P/W SW DOWN INPUT
LH P/W SW UP INPUT
LH P/W MOTOR AND D/L MOTOR POWER(+B)
RH P/W MOTOR DOWN OUTPUT
RH P/W MOTOR UP OUTPUT
RH P/W MOTOR POWER(+B)
RH P/W SW DOWN INPUT
RH P/W SW UP INPUT
START SW M CONTACT
GND
DD16A
DD18A
B01
Fuse box
110
M6
B19
B18
GT24A
AN4A
PW01 PG
PW14 2-YL
PW09 2-O
#094 A04
Door lock switch
AK8A
LOCK
N(Neutral)
UNLK
DL05 Lg
DL04 O
DLE2 B
130 [15] CE11 5-B
130 CE11 5-B
JCE2 2-B
JCE1 2-B
JOINT 14
905 J39
Joint connector (J/C-1)
CE07 2-B
CE05 2-B
130 CE07 2-B
DLE2 B
JOINT E7
130 CE05 2-B
PWE3 2-B
JOINT E5
905 J05
Joint connector (J/C-6)
PWE1 B
CE10 2-B
ACE4 1.25-B
130 [15] CE10 2-B
E03 #511
Door lock actuator, LH
FA5A
LOCK
UNLOCK
SW
ACTUATOR
E01 #423
Power window motor, LH
AB2A
UP
DOWN
J09
Connector
AK2A
DD10A
J01
AK10A
E02 #027
Power window switch, LH
DD8A
LH SW
RH SW
W/L SW
Cab
Door, LH
Door, RH
J28
AK10A
DQ2B
DD6A
AB2A
Door lock actuator, RH
E03 #510
Power window switch, RH
E02 #026
Power window motor, RH
E01 #423
P/W:Power window
D/L:Door lock
W/L:Window lock

622-C04130

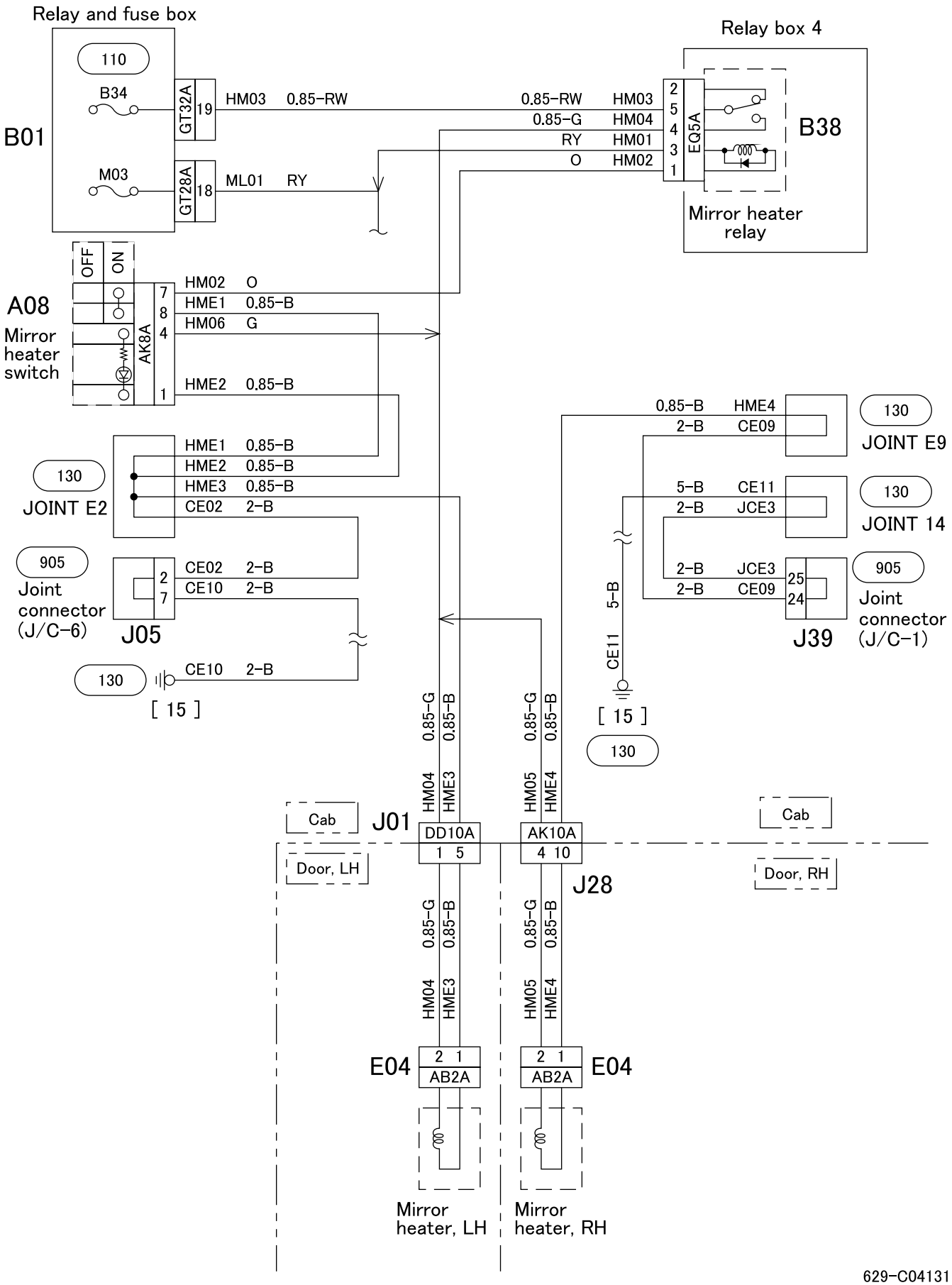
Relay and fuse box
110
B34
M03
B01
GT32A
19
GT28A
18
HM03 0.85-RW
ML01 RY
Relay box 4
0.85-RW HM03
0.85-G HM04
RY HM01
O HM02
EQ5A
B38
Mirror heater relay
OFF
ON
A08
Mirror heater switch
AK8A
HM02 O
HME1 0.85-B
HM06 G
HME2 0.85-B
130
JOINT E2
HME1 0.85-B
HME2 0.85-B
HME3 0.85-B
CE02 2-B
905
Joint connector (J/C-6)
J05
CE02 2-B
CE10 2-B
130
CE10 2-B
[15]
0.85-B HME4
2-B CE09
130
JOINT E9
5-B CE11
2-B JCE3
130
JOINT 14
2-B JCE3
2-B CE09
905
Joint connector (J/C-1)
J39
5-B CE11
[15]
130
HM04 HME3 0.85-G 0.85-B
HM05 HME4 0.85-G 0.85-B
Cab
J01
DD10A
AK10A
Door, LH
Door, RH
J28
E04
AB2A
Mirror heater, LH
Mirror heater, RH

629-C04131

54-07 CHASSIS SIDE ELECTRICAL CIRCUIT

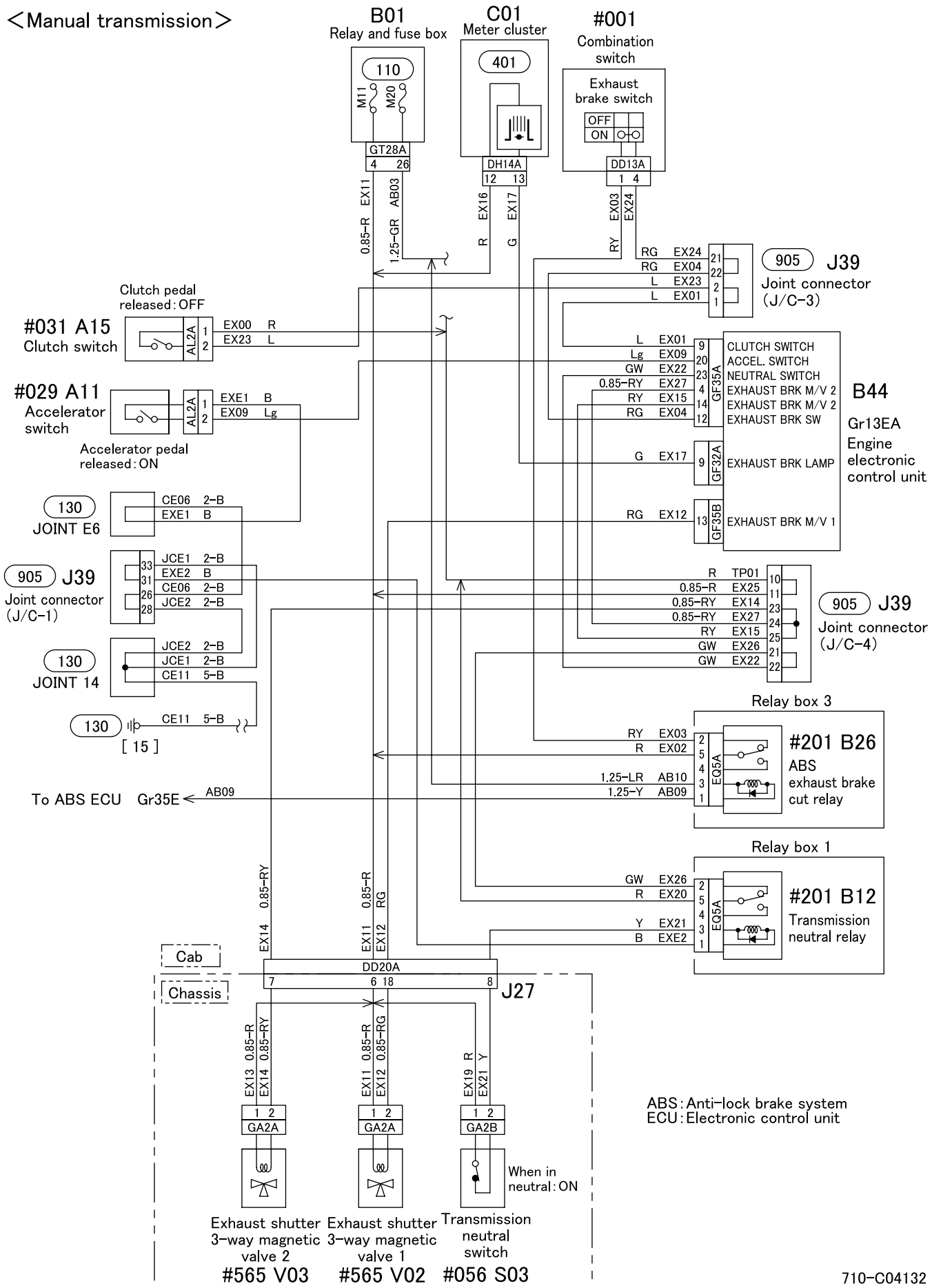
<Manual transmission>
B01
Relay and fuse box
110
M11
M20
GT28A
4 26
0.85-R EX11
1.25-GR AB03
C01
Meter cluster
401
DH14A
12 13
R EX16
G EX17
#001
Combination switch
Exhaust brake switch
OFF
ON
DD13A
1 4
RY EX03
EX24
905 J39
Joint connector (J/C-3)
RG EX24
RG EX04
L EX23
L EX01
Clutch pedal released: OFF
#031 A15
Clutch switch
AL2A
EX00 R
EX23 L
#029 A11
Accelerator switch
EXE1 B
EX09 Lg
Accelerator pedal released: ON
B44
Gr13EA
Engine electronic control unit
L EX01
Lg EX09
GW EX22
0.85-RY EX27
RY EX15
RG EX04
GF35A
CLUTCH SWITCH
ACCEL. SWITCH
NEUTRAL SWITCH
EXHAUST BRK M/V 2
EXHAUST BRK M/V 2
EXHAUST BRK SW
G EX17
GF32A
EXHAUST BRK LAMP
RG EX12
GF35B
EXHAUST BRK M/V 1
130
JOINT E6
CE06 2-B
EXE1 B
905 J39
Joint connector (J/C-1)
JCE1 2-B
EXE2 B
CE06 2-B
JCE2 2-B
130
JOINT 14
JCE2 2-B
JCE1 2-B
CE11 5-B
130
[15]
CE11 5-B
R TP01
0.85-R EX25
0.85-RY EX14
0.85-RY EX27
RY EX15
GW EX26
GW EX22
905 J39
Joint connector (J/C-4)
Relay box 3
RY EX03
R EX02
1.25-LR AB10
1.25-Y AB09
EQ5A
#201 B26
ABS exhaust brake cut relay
To ABS ECU Gr35E
AB09
Relay box 1
GW EX26
R EX20
Y EX21
B EXE2
#201 B12
Transmission neutral relay
Cab
Chassis
DD20A
7 6 18 8
J27
EX14 0.85-RY
EX11 0.85-R
EX12 RG
EX13 0.85-R
EX14 0.85-RY
EX11 0.85-R
EX12 0.85-RG
EX19 R
EX21 Y
1 2
GA2A
GA2A
GA2B
When in neutral: ON
Exhaust shutter 3-way magnetic valve 2
#565 V03
Exhaust shutter 3-way magnetic valve 1
#565 V02
Transmission neutral switch
#056 S03
ABS: Anti-lock brake system
ECU: Electronic control unit
710-C04132

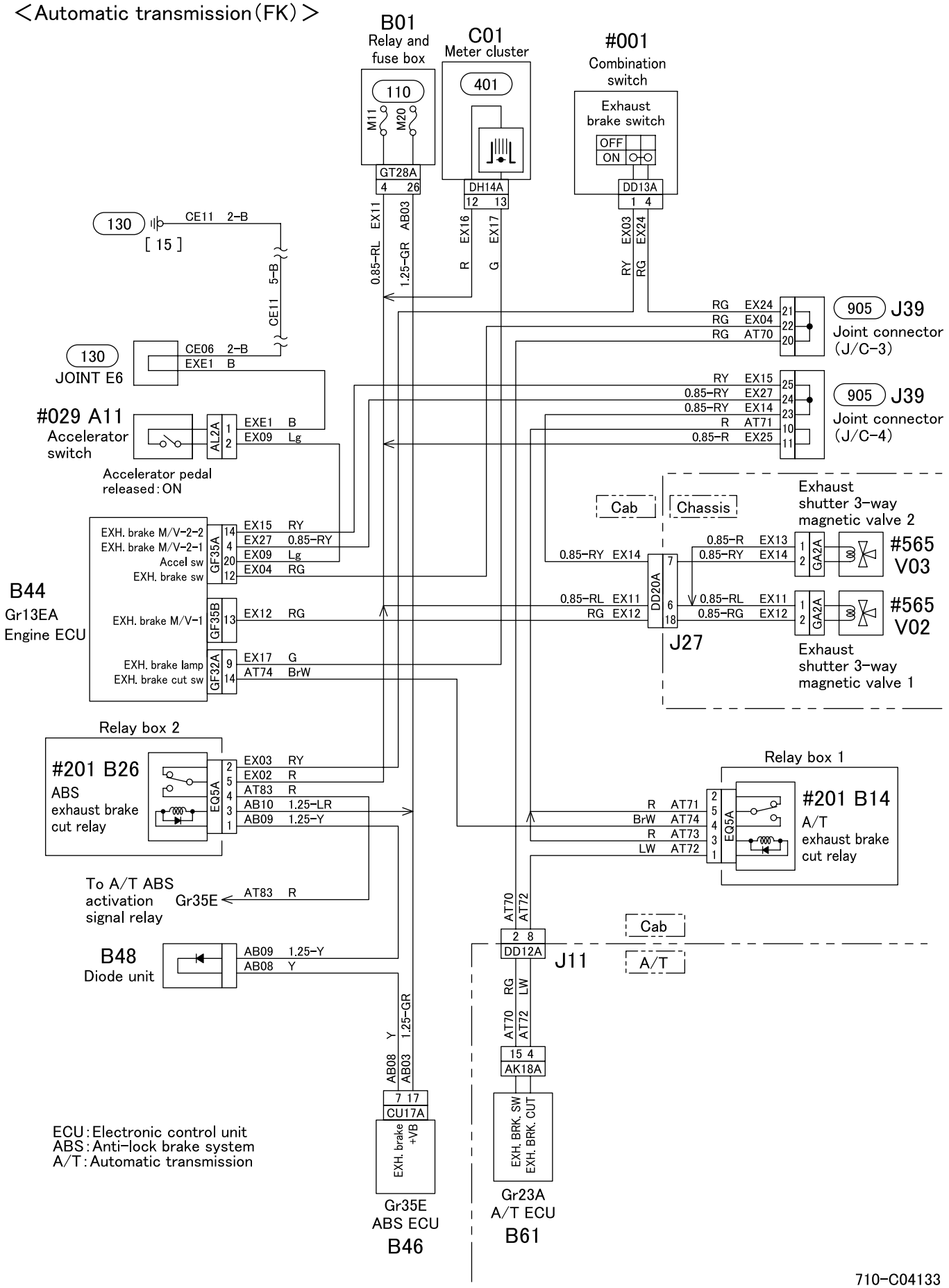
<Automatic transmission (FK)>
B01
Relay and fuse box
110
M11
M20
C01
Meter cluster
401
#001
Combination switch
Exhaust brake switch
OFF
ON
GT28A
4 26
DH14A
12 13
DD13A
1 4
130
[15]
CE11 2-B
CE11 5-B
130
JOINT E6
CE06 2-B
EXE1 B
#029 A11
Accelerator switch
Accelerator pedal released : ON
AL2A
1 EXE1 B
2 EX09 Lg
EX11 0.85-RL
AB03 1.25-GR
EX16 R
EX17 G
EX03 RY
EX24 RG
RG EX24
RG EX04
RG AT70
905 J39
Joint connector (J/C-3)
RY EX15
0.85-RY EX27
0.85-RY EX14
R AT71
0.85-R EX25
905 J39
Joint connector (J/C-4)
Cab
Chassis
Exhaust shutter 3-way magnetic valve 2
0.85-R EX13
0.85-RY EX14
GA2A
#565 V03
0.85-RY EX14
DD20A
7
6
18
0.85-RL EX11
RG EX12
0.85-RL EX11
0.85-RG EX12
#565 V02
J27
Exhaust shutter 3-way magnetic valve 1
B44
Gr13EA
Engine ECU
EXH. brake M/V-2-2
EXH. brake M/V-2-1
Accel sw
EXH. brake sw
GF35A
14 EX15 RY
4 EX27 0.85-RY
20 EX09 Lg
12 EX04 RG
EXH. brake M/V-1
GF35B
13 EX12 RG
EXH. brake lamp
EXH. brake cut sw
GF32A
9 EX17 G
14 AT74 BrW
Relay box 2
#201 B26
ABS exhaust brake cut relay
EQ5A
2 EX03 RY
5 EX02 R
4 AT83 R
3 AB10 1.25-LR
1 AB09 1.25-Y
Relay box 1
#201 B14
A/T exhaust brake cut relay
R AT71
BrW AT74
R AT73
LW AT72
To A/T ABS activation signal relay
Gr35E
AT83 R
B48
Diode unit
AB09 1.25-Y
AB08 Y
AT70
AT72
2 8
DD12A
J11
Cab
A/T
RG
LW
AT70
AT72
15 4
AK18A
AB08 Y
AB03 1.25-GR
7 17
CU17A
EXH. brake +VB
EXH. BRK. SW
EXH. BRK. CUT
Gr35E
ABS ECU
B46
Gr23A
A/T ECU
B61
ECU : Electronic control unit
ABS : Anti-lock brake system
A/T : Automatic transmission

710-C04133

710 EXHAUST BRAKE CIRCUIT

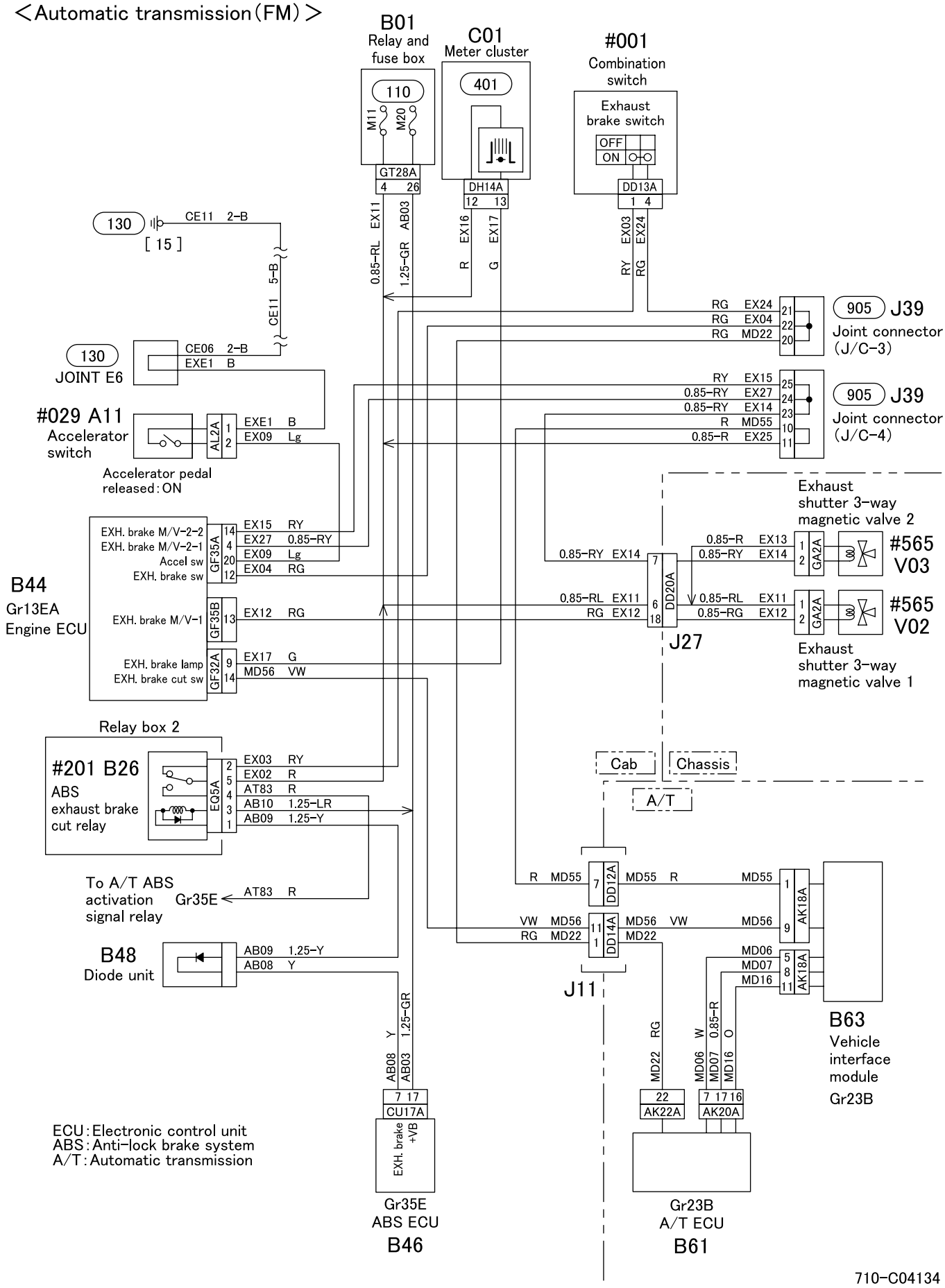

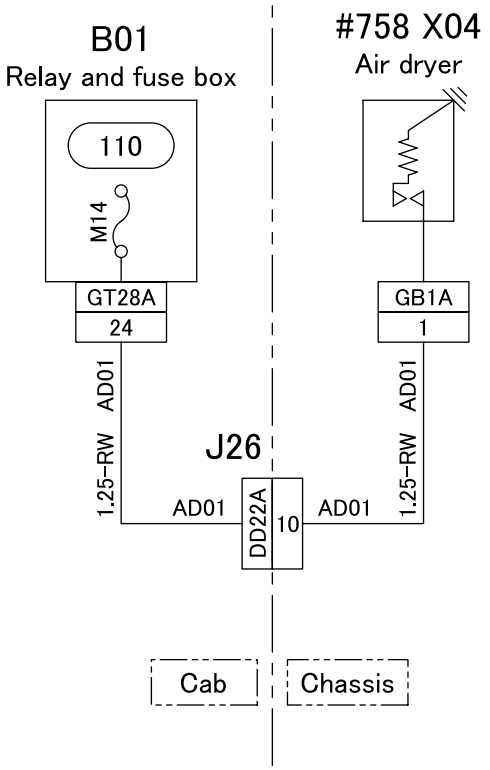
B01
Relay and fuse box
110
M14
GT28A
24
AD01
1.25-RW
#758 X04
Air dryer
GB1A
1
AD01
1.25-RW
J26
AD01
DD22A
10
AD01
Cab
Chassis

718-C04135

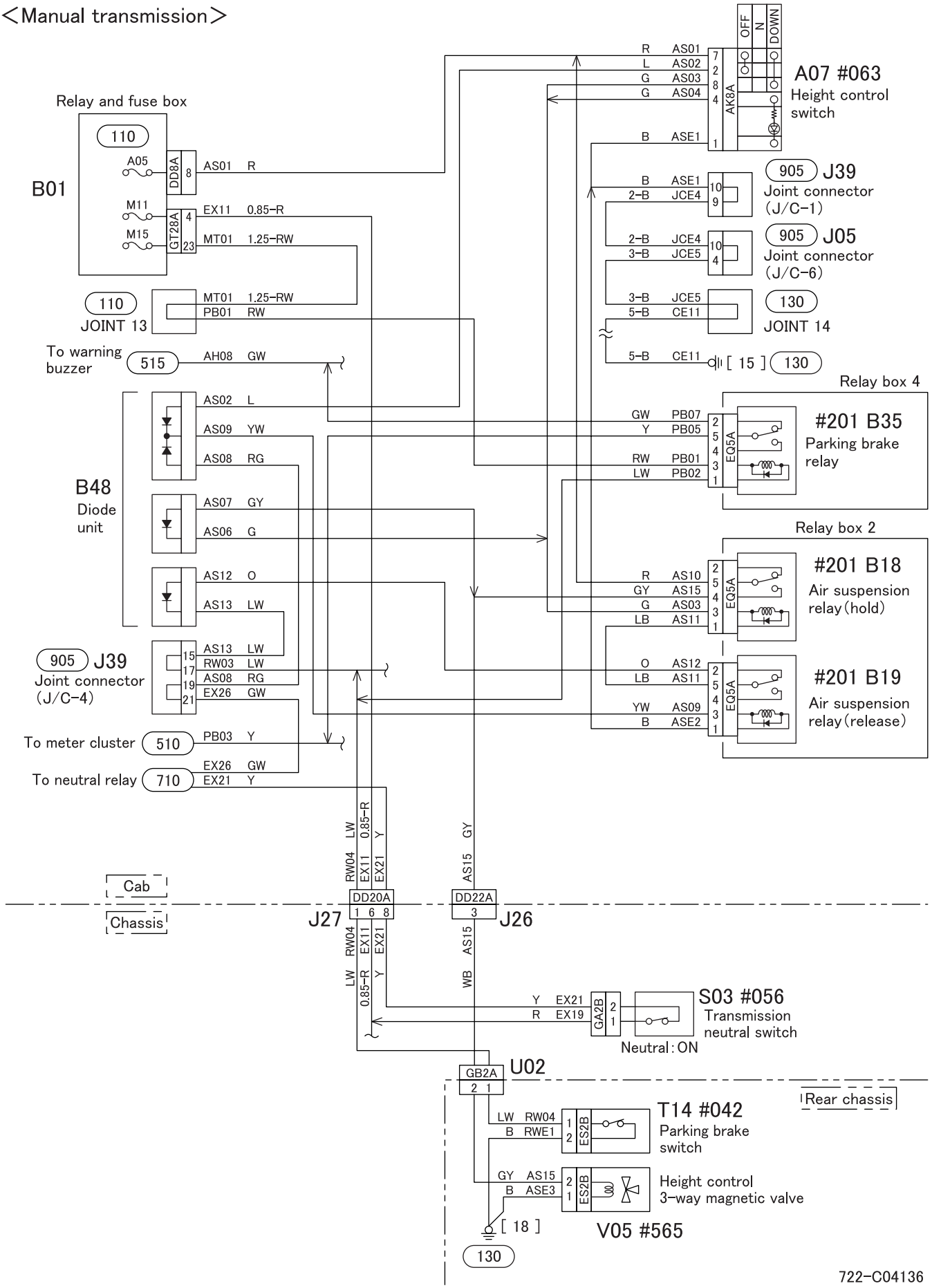
<Manual transmission>
A07 #063
Height control switch
OFF
N
DOWN
AK8A
R AS01
L AS02
G AS03
G AS04
B ASE1
Relay and fuse box
110
B01
A05
M11
M15
DD8A
GT28A
AS01 R
EX11 0.85-R
MT01 1.25-RW
905 J39
Joint connector (J/C-1)
B ASE1
2-B JCE4
905 J05
Joint connector (J/C-6)
2-B JCE4
3-B JCE5
130
JOINT 14
3-B JCE5
5-B CE11
5-B CE11 [15] 130
110
JOINT 13
MT01 1.25-RW
PB01 RW
To warning buzzer
515
AH08 GW
Relay box 4
#201 B35
Parking brake relay
EQ5A
GW PB07
Y PB05
RW PB01
LW PB02
B48
Diode unit
AS02 L
AS09 YW
AS08 RG
AS07 GY
AS06 G
AS12 O
AS13 LW
Relay box 2
#201 B18
Air suspension relay (hold)
R AS10
GY AS15
G AS03
LB AS11
#201 B19
Air suspension relay (release)
O AS12
LB AS11
YW AS09
B ASE2
905 J39
Joint connector (J/C-4)
AS13 LW
RW03 LW
AS08 RG
EX26 GW
To meter cluster
510
PB03 Y
To neutral relay
710
EX26 GW
EX21 Y
Cab
Chassis
J27
J26
DD20A
DD22A
RW04 LW
EX11 0.85-R
EX21 Y
AS15 GY
WB
S03 #056
Transmission neutral switch
GA2B
Y EX21
R EX19
Neutral : ON
U02
GB2A
Rear chassis
T14 #042
Parking brake switch
ES2B
LW RW04
B RWE1
GY AS15
B ASE3
Height control 3-way magnetic valve
V05 #565
[18]
130
722-C04136

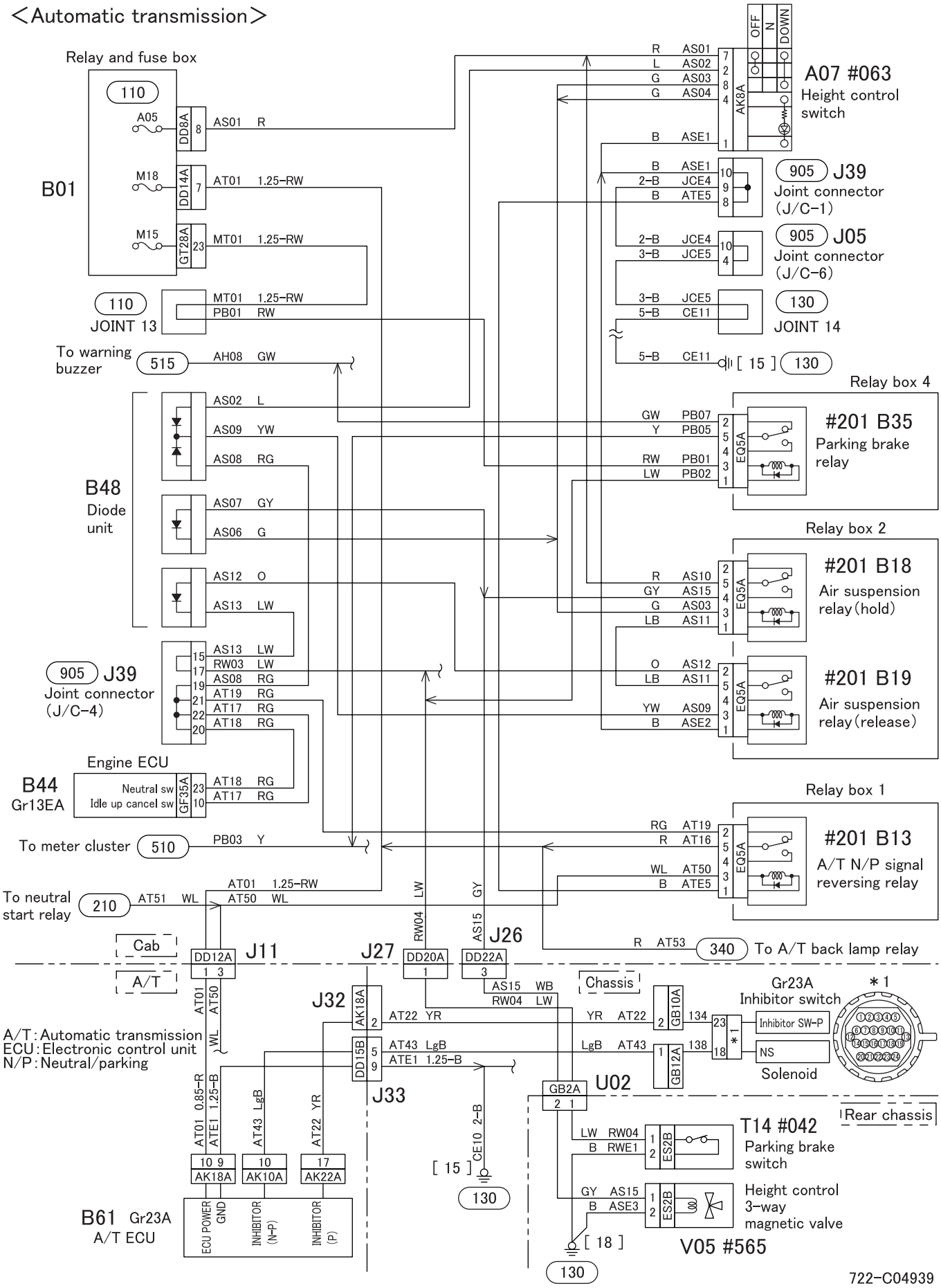
<Automatic transmission>
Relay and fuse box
B01
110
A05
DD8A
8
AS01 R
M18
DD14A
7
AT01 1.25-RW
M15
GT28A
23
MT01 1.25-RW
110
JOINT 13
MT01 1.25-RW
PB01 RW
To warning buzzer
515
AH08 GW
B48
Diode unit
AS02 L
AS09 YW
AS08 RG
AS07 GY
AS06 G
AS12 O
AS13 LW
905 J39
Joint connector (J/C-4)
AS13 LW
RW03 LW
AS08 RG
AT19 RG
AT17 RG
AT18 RG
Engine ECU
B44
Gr13EA
Neutral sw
Idle up cancel sw
GF35A
AT18 RG
AT17 RG
To meter cluster
510
PB03 Y
To neutral start relay
210
AT51 WL
AT01 1.25-RW
AT50 WL
Cab
A/T
DD12A
J11
J27
DD20A
DD22A
J26
LW
GY
RW04
AS15
R AT53
340
To A/T back lamp relay
A/T: Automatic transmission
ECU: Electronic control unit
N/P: Neutral/parking
J32
AK18A
2
AT22 YR
DD15B
5
9
AT43 LgB
ATE1 1.25-B
AS15 WB
RW04 LW
Chassis
YR AT22
LgB AT43
GB10A
GB12A
134
138
23
18
*1
Gr23A
Inhibitor switch
Inhibitor SW-P
NS
Solenoid
*1
J33
U02
GB2A
2 1
Rear chassis
T14 #042
Parking brake switch
LW RW04
B RWE1
ES2B
Height control 3-way magnetic valve
GY AS15
B ASE3
V05 #565
[18]
130
[15]
CE10 2-B
AT01 0.85-R
ATE1 1.25-B
AT43 LgB
AT22 YR
AT01
AT50
WL
10 9
AK18A
10
AK10A
17
AK22A
B61 Gr23A
A/T ECU
ECU POWER
GND
INHIBITOR (N-P)
INHIBITOR (P)
A07 #063
Height control switch
R AS01
L AS02
G AS03
G AS04
B ASE1
AK8A
OFF
N
DOWN
905 J39
Joint connector (J/C-1)
B ASE1
2-B JCE4
B ATE5
905 J05
Joint connector (J/C-6)
2-B JCE4
3-B JCE5
3-B JCE5
5-B CE11
130
JOINT 14
5-B CE11
[15]
130
Relay box 4
#201 B35
Parking brake relay
GW PB07
Y PB05
RW PB01
LW PB02
EQ5A
Relay box 2
#201 B18
Air suspension relay (hold)
R AS10
GY AS15
G AS03
LB AS11
#201 B19
Air suspension relay (release)
O AS12
LB AS11
YW AS09
B ASE2
Relay box 1
#201 B13
A/T N/P signal reversing relay
RG AT19
R AT16
WL AT50
B ATE5
722-C04939

54-08 ENGINE AND TRANSMISSION SIDE ELECTRICAL CIRCUIT

850 TRANSMISSION POWER TAKE-OFF CIRCUIT

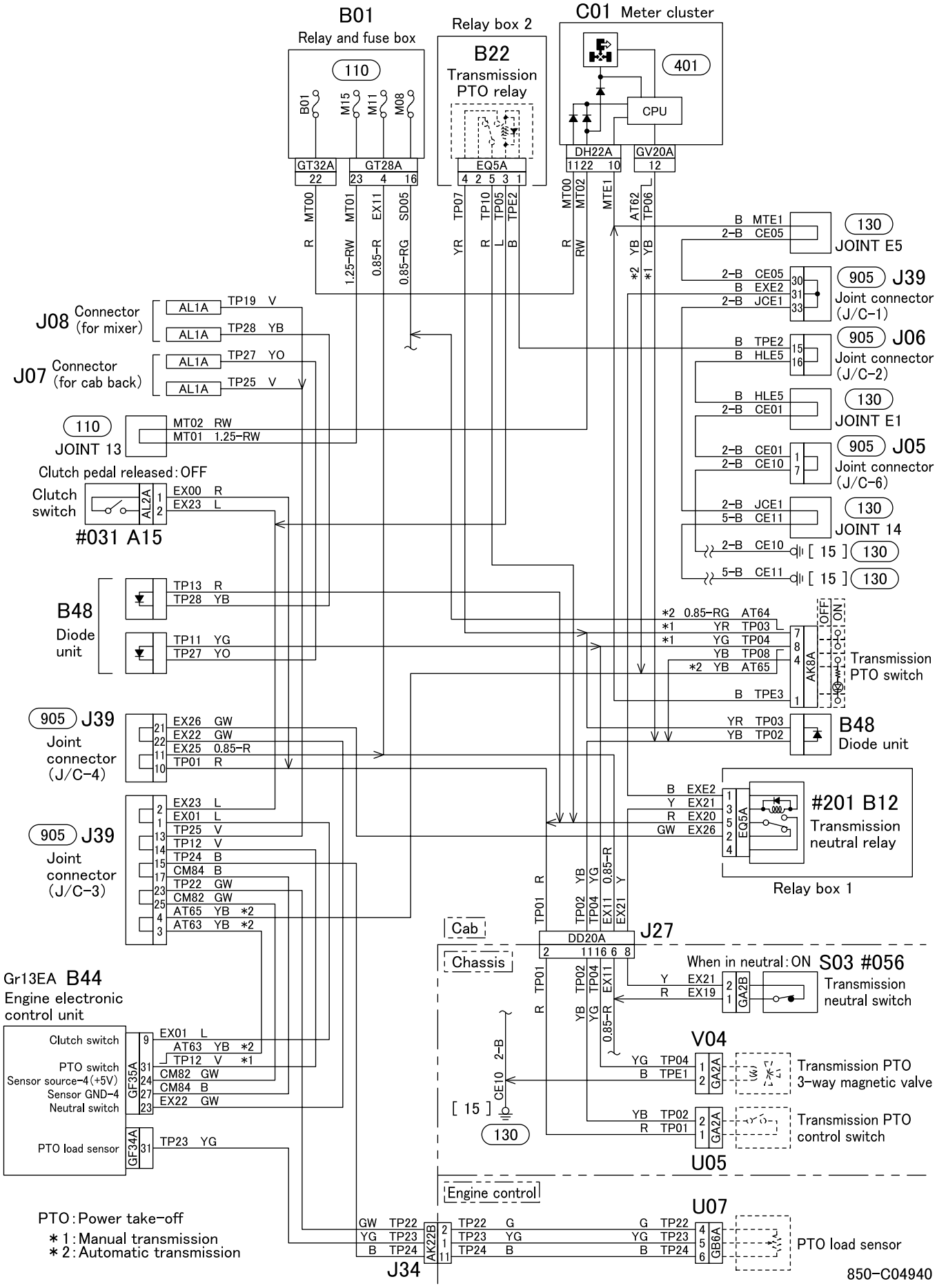

54-09 OTHER CIRCUIT

<J/C-1>

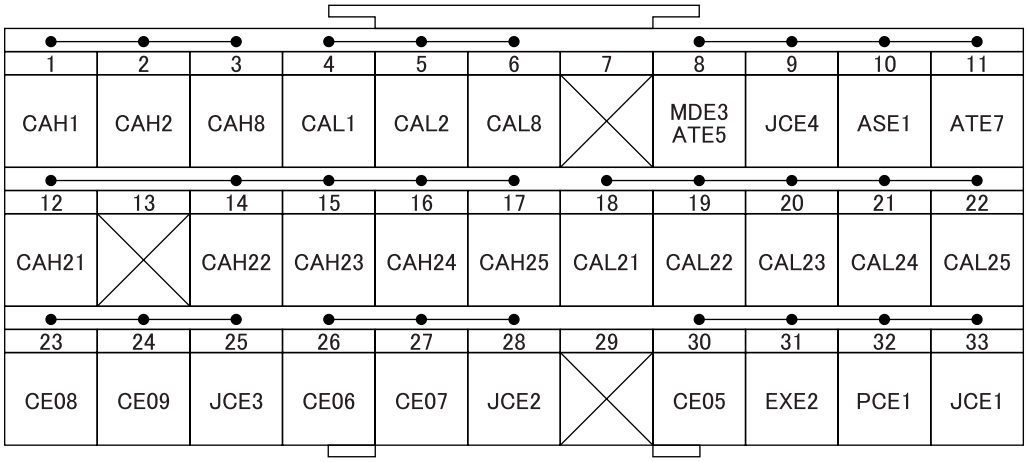

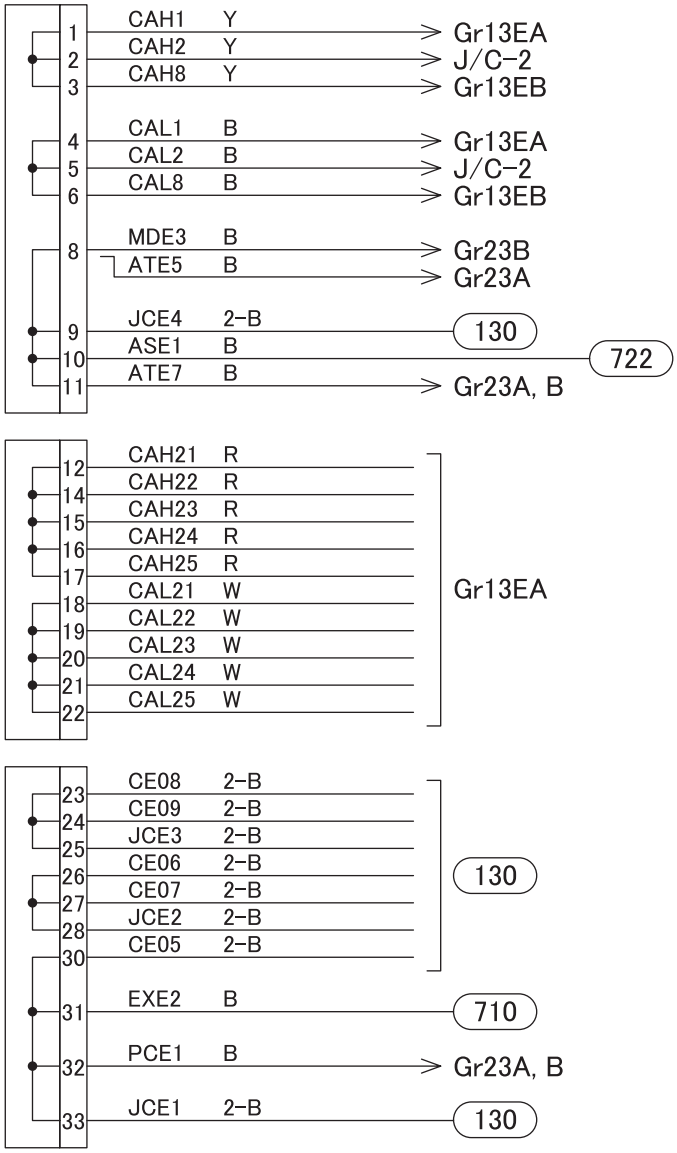

905-C04139

<J/C-2>

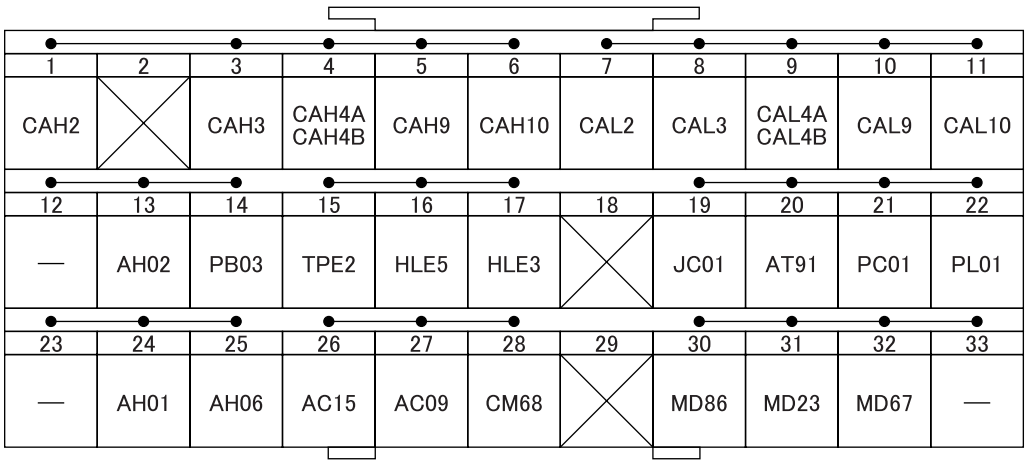
1 2 3 4 5 6 7 8 9 10 11
CAH2
CAH3
CAH4A CAH4B
CAH9
CAH10
CAL2
CAL3
CAL4A CAL4B
CAL9
CAL10
12 13 14 15 16 17 18 19 20 21 22
—
AH02
PB03
TPE2
HLE5
HLE3
JC01
AT91
PC01
PL01
23 24 25 26 27 28 29 30 31 32 33
—
AH01
AH06
AC15
AC09
CM68
MD86
MD23
MD67
—

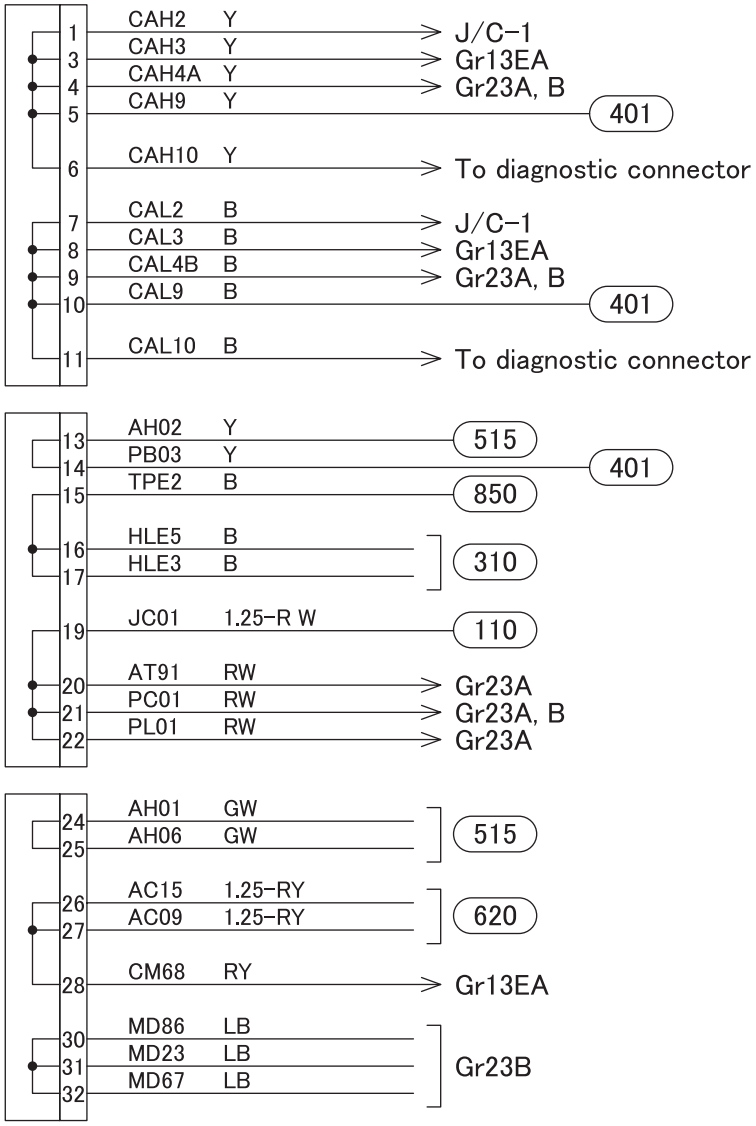
1 CAH2 Y → J/C-1
3 CAH3 Y → Gr13EA
4 CAH4A Y → Gr23A, B
5 CAH9 Y → 401
6 CAH10 Y → To diagnostic connector
7 CAL2 B → J/C-1
8 CAL3 B → Gr13EA
9 CAL4B B → Gr23A, B
10 CAL9 B → 401
11 CAL10 B → To diagnostic connector
13 AH02 Y → 515
14 PB03 Y → 401
15 TPE2 B → 850
16 HLE5 B
17 HLE3 B → 310
19 JC01 1.25-R W → 110
20 AT91 RW → Gr23A
21 PC01 RW → Gr23A, B
22 PL01 RW → Gr23A
24 AH01 GW
25 AH06 GW → 515
26 AC15 1.25-RY
27 AC09 1.25-RY → 620
28 CM68 RY → Gr13EA
30 MD86 LB
31 MD23 LB
32 MD67 LB → Gr23B

<J/C-3>

1	2	3	4	5	6	7	8	9	10	11
EX01	EX23	AT63	AT65	DPE6	DPE1	DP11	DP04		TL02	MD84
12	13	14	15	16	17	18	19	20	21	22
MD52	MD85 TP25	MD51 TP12	TP24	CM97	CM84		—	AT70 MD22	EX24	EX04
23	24	25	26	27	28	29	30	31	32	33
TP22	CM96	CM82	WG01	WG04	WG02		—	CM03	CM94	CM02

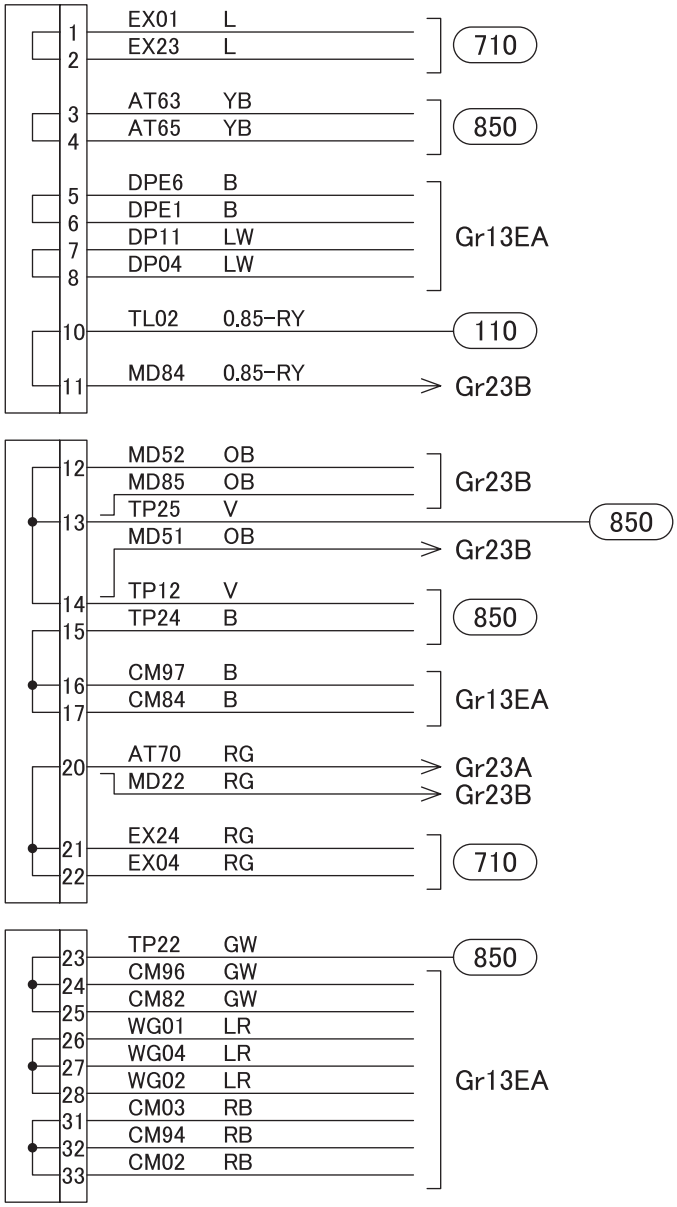

905-C04941

<J/C-4>

1	2	3	4	5	6	7	8	9	10	11
SPE1	LAE1	—	—	PL03	SL03	AT82 MD62	SL10		AT71 MD55 TP01	EX25
12	13	14	15	16	17	18	19	20	21	22
AT97	AT83 BL01	AT84	AS13	PB04	RW03		AS08	AT18	AT19 EX26	AT17 EX22
23	24	25	26	27	28	29	30	31	32	33
EX14	EX27	EX15	AT90	CM09	CM95		ST02	ST06	CM05	—

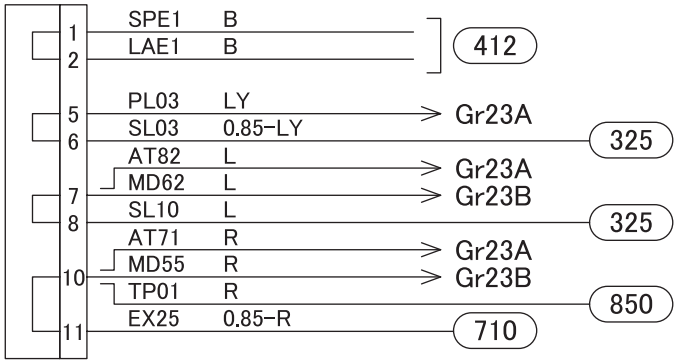

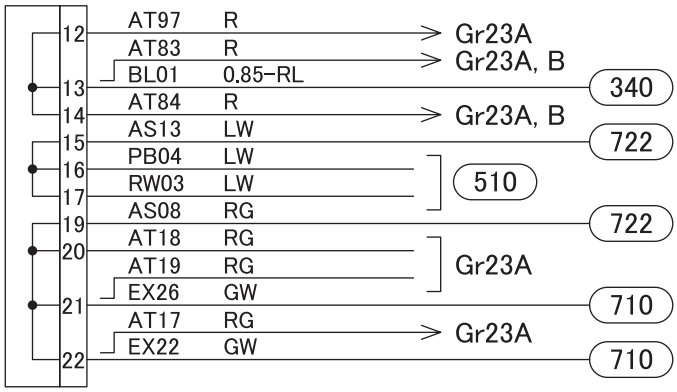

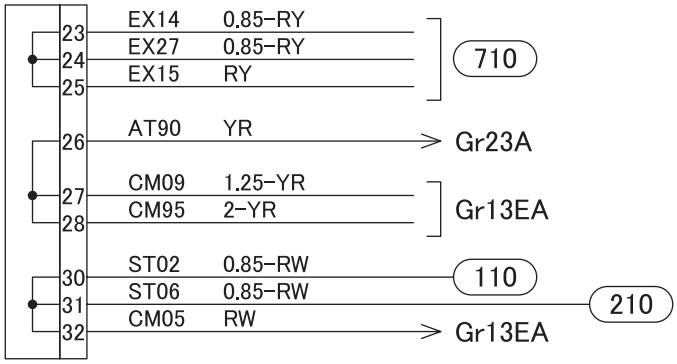

905-C04142

<J/C-6>

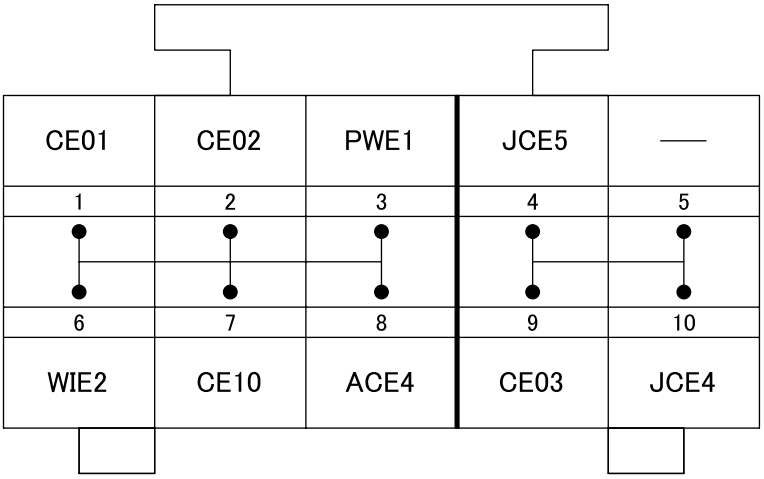

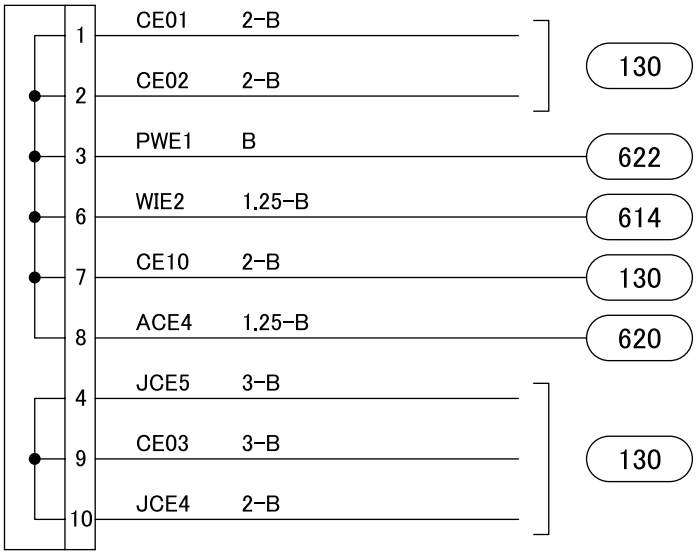

905-C04143

＜J/C(FK)＞

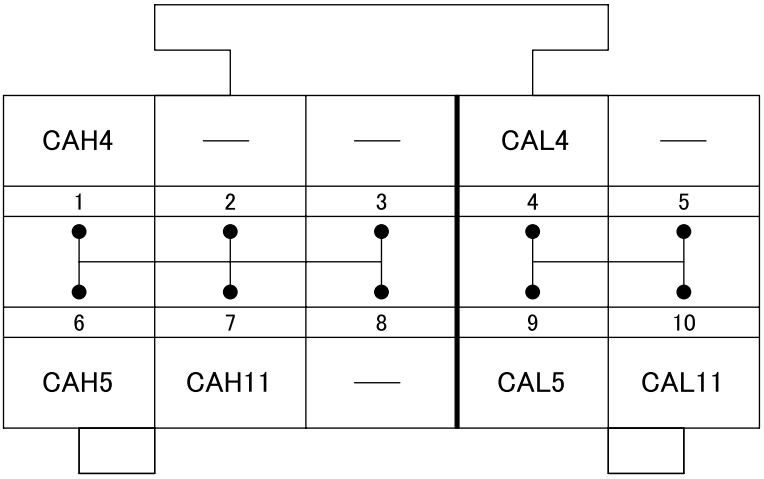
CAH4
—
—
CAL4
—
1
2
3
4
5
6
7
8
9
10
CAH5
CAH11
—
CAL5
CAL11

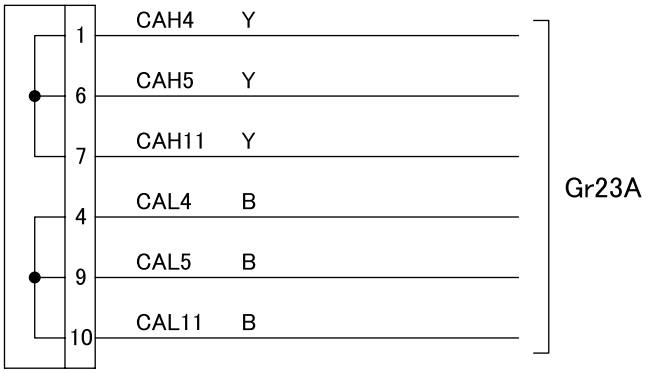
1
6
7
4
9
10
CAH4 Y
CAH5 Y
CAH11 Y
CAL4 B
CAL5 B
CAL11 B
Gr23A

＜J/C(FM)＞

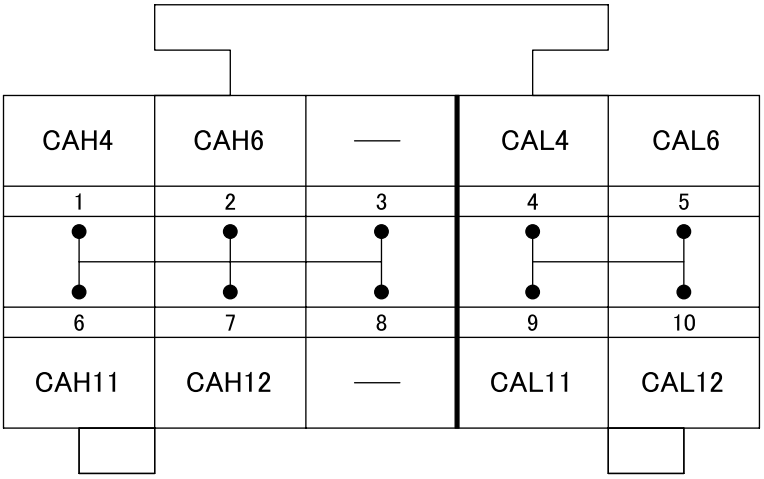

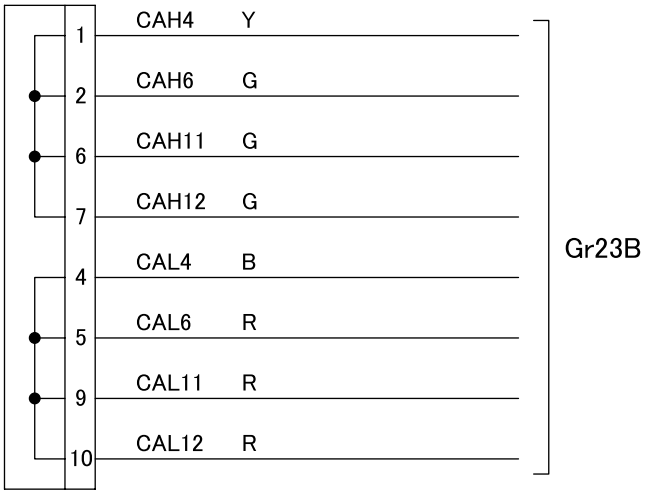

905-C04145

54-10 ELECTRICAL EQUIPMENT INSTALLATION POSITIONS

A01 to 15

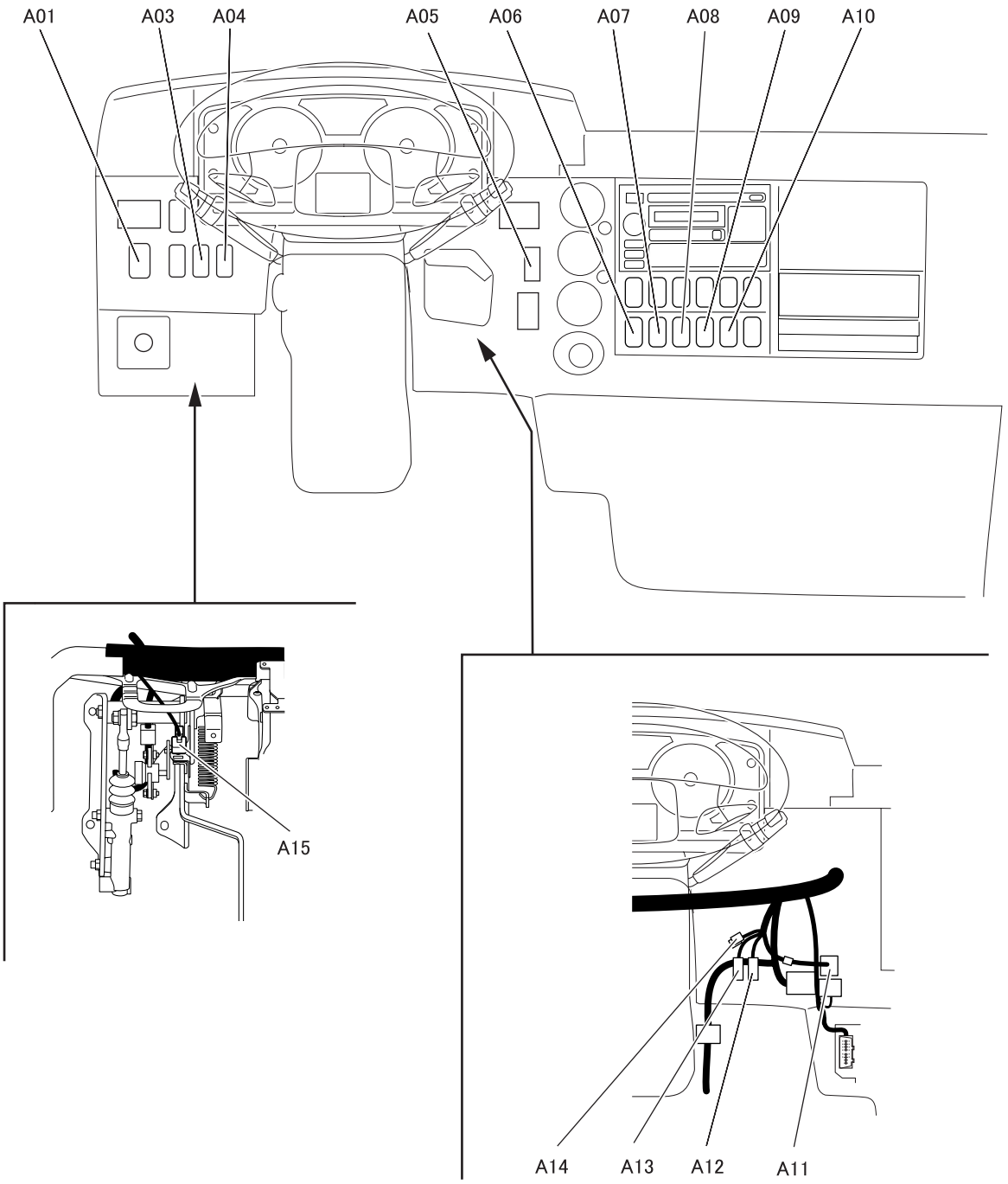

A01 Rheostat switch
A03 Engine oil level check switch
A04 Door lock switch
A05 Cruise control main switch
A06 Power mode switch <FK (A/T)>
A07 Height control switch
A08 Mirror heater switch
A09 Van body dome light switch
A10 DPF cleaning switch
A11 Accelerator switch
A12 Diagnosis switch <MVCU, Engine ECU>
A13 Memory clear switch <MVCU>
A14 Diagnosis switch <ABS ECU>
A15 Clutch switch

A/T : Automatic transmission
ABS : Anti-lock brake system
ECU : Electronic control unit
DPF : Diesel particulate filter
MVCU : Multifunction vehicle control unit

L02478

A21 to 28

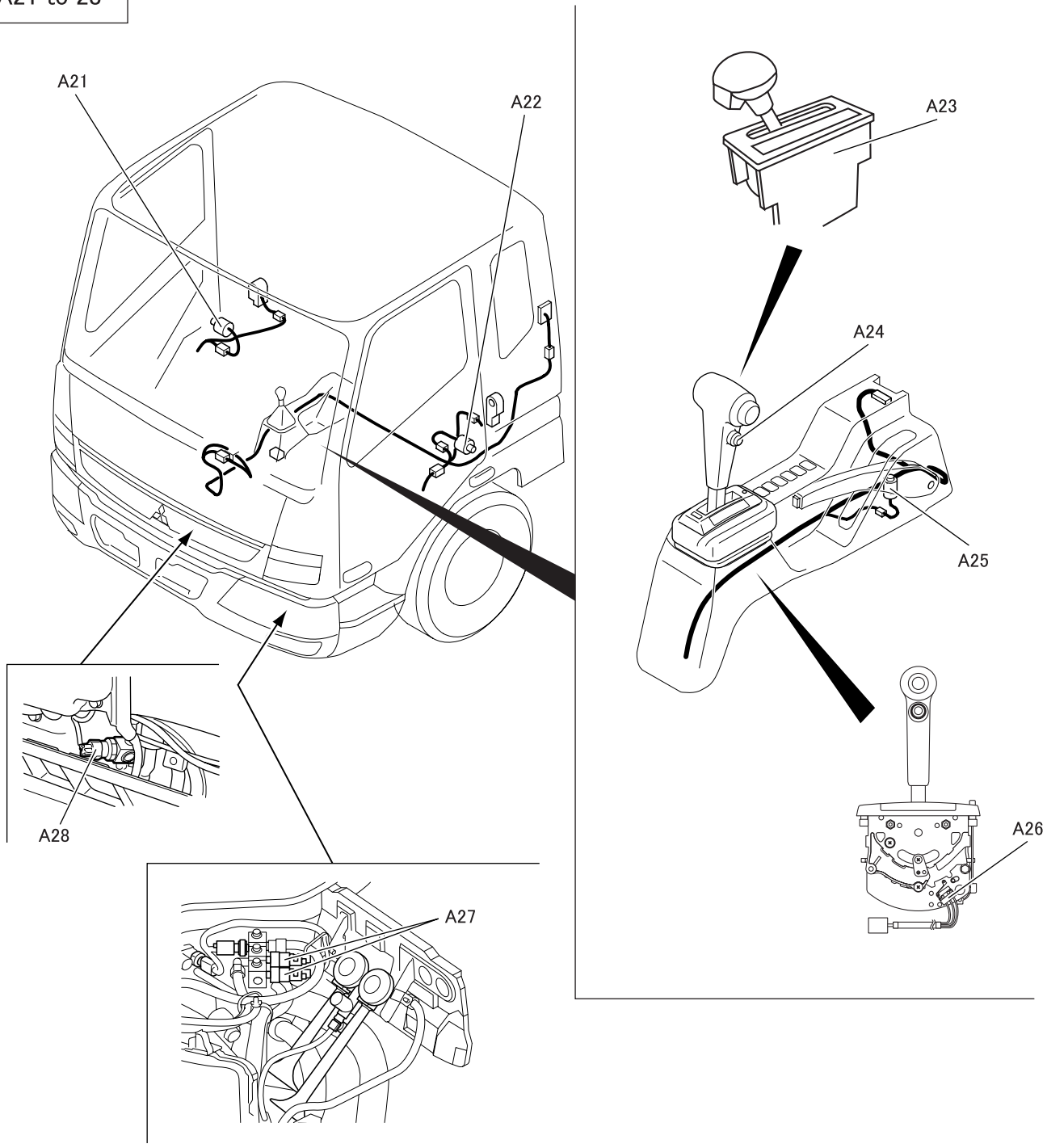

A21 Door switch, RH
A22 Door switch, LH
A23 Range selector <FM (A/T)>
A24 O/D switch <FK (A/T)>
A25 Parking brake switch <Center parking brake>
A26 P range switch <FK (A/T)>
A27 Stop lamp switch
A28 Dual pressure switch <With air-conditioner>

O/D : Over drive
A/T : Automatic transmission

L02479

B RELAY AND ELECTRONIC CONTROL UNIT

B01 to 39

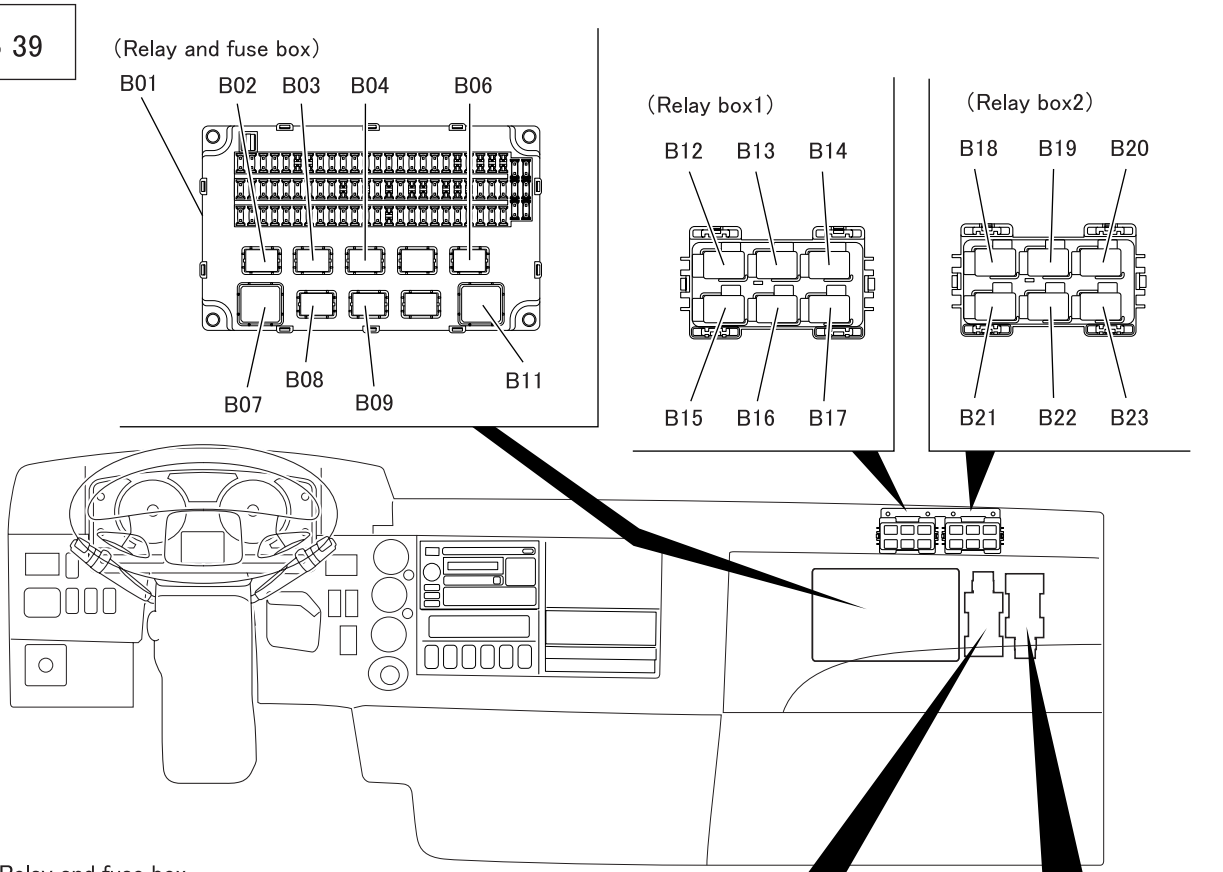

B01 Relay and fuse box
B02 Headlamp relay (HIGH)
B03 Short connector
B04 High beam relay
B06 Tail lamp relay
B07 Wiper relay (HIGH)
B08 Stop lamp relay
B09 Short connector
B11 Wiper relay (LOW)
B12 Transmission neutral relay <M/T>
P shift lock relay <FK (A/T)>
B13 Fan motor relay1 <FM (A/T)>
A/T N/P signal reversing relay <FK (A/T)>
B14 Fan motor relay2 <FM (A/T)>
A/T exhaust brake cut relay <FK (A/T)>
B15 A/T back lamp relay <FK (A/T)>
A/T stop lamp relay <FM (A/T)>
B16 A/T ABS activation signal relay
B17 Selector neutral relay <FM (A/T)>
ABS indicator relay <FK (A/T)>
B18 Air suspension relay (hold) <FK65>
B19 Air suspension relay (release) <FK65>
B20 Spare D.C relay
B21 Cruise control main relay
B22 Transmission power take-off relay
B23 Parking brake relay
B24 Neutral start relay
B25 Safety relay
B26 ABS exhaust brake cut relay
B27 Headlamp relay (LOW), RH
B28 Blower motor relay
B29 Engine oil level relay
B30 Glow drive relay

B31 EDU relay
B32 ECU main relay
B33 Van body dome light relay
B34 Condenser fan relay
B35 Parking brake relay <Wheel park>
B36 DRL relay
B37 Air-conditioner compressor relay
B38 Mirror heater relay
B39 Headlamp relay (LOW), LH

DRL : Daytime running light
A/T : Automatic transmission
M/T : Manual transmission
ECU : Electronic control unit
ABS : Anti-lock brake system
N/P : Neutral/Parking

L02480

B41 to 51

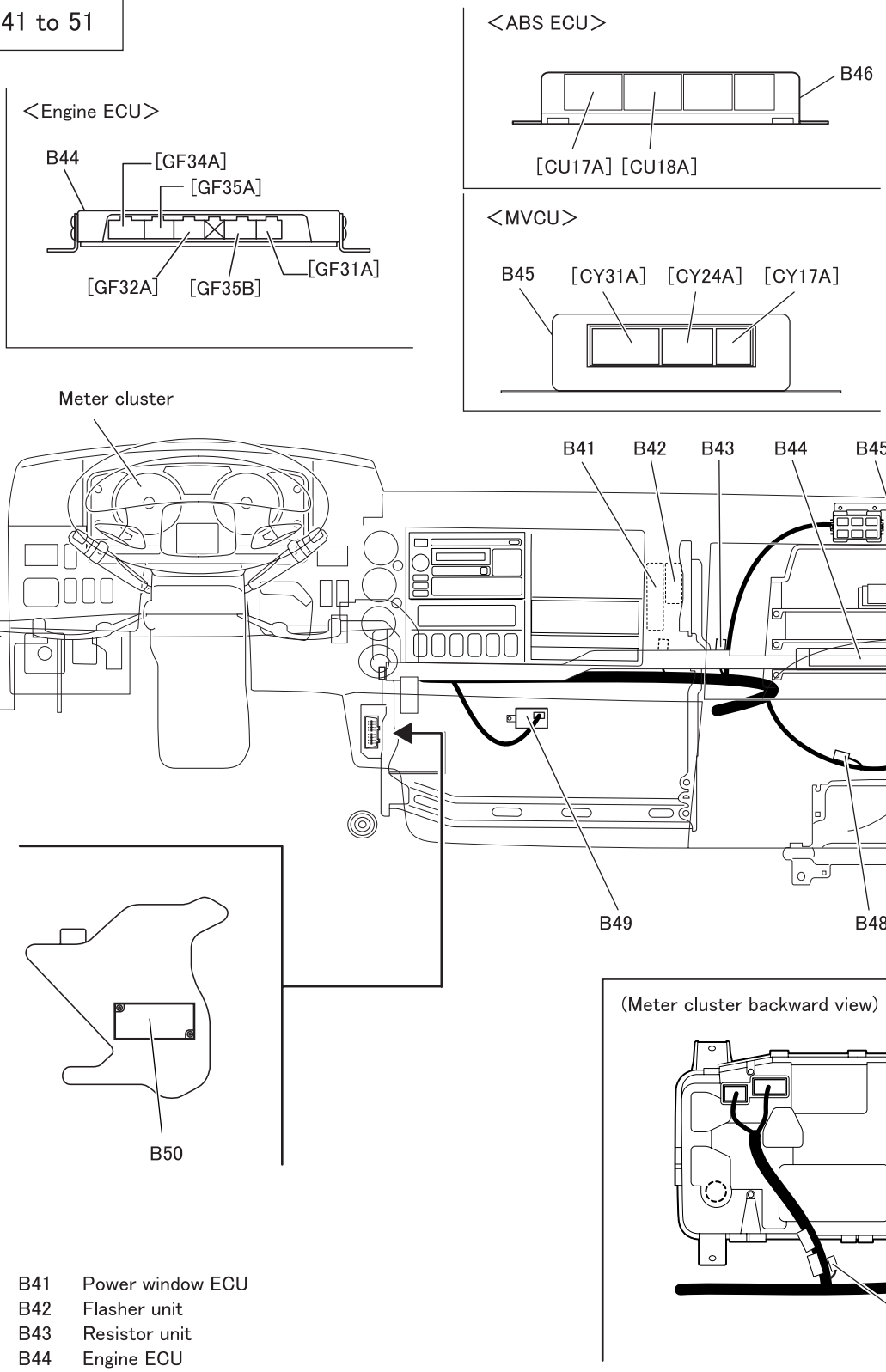

B41 Power window ECU
B42 Flasher unit
B43 Resistor unit
B44 Engine ECU
B45 MVCU
B46 ABS ECU
B47 Pulse converter <A/T>
B48 Diode unit
B49 Daytime running light ECU
B50 Multipurpose timing control unit
B51 Resistor unit

A/T : Automatic transmission
M/T : Manual transmission
ECU : Electronic control unit
ABS : Anti-lock brake system
MVCU : Multifunction vehicle control unit

Indicate by connector type [ ].

L02481

B61 to 64

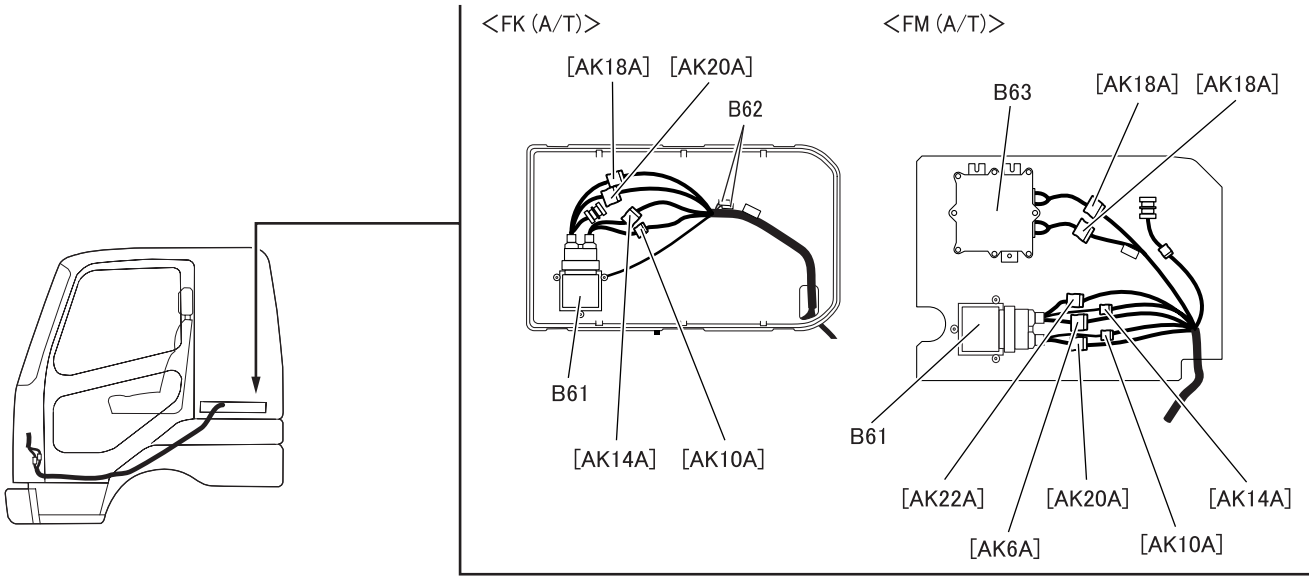

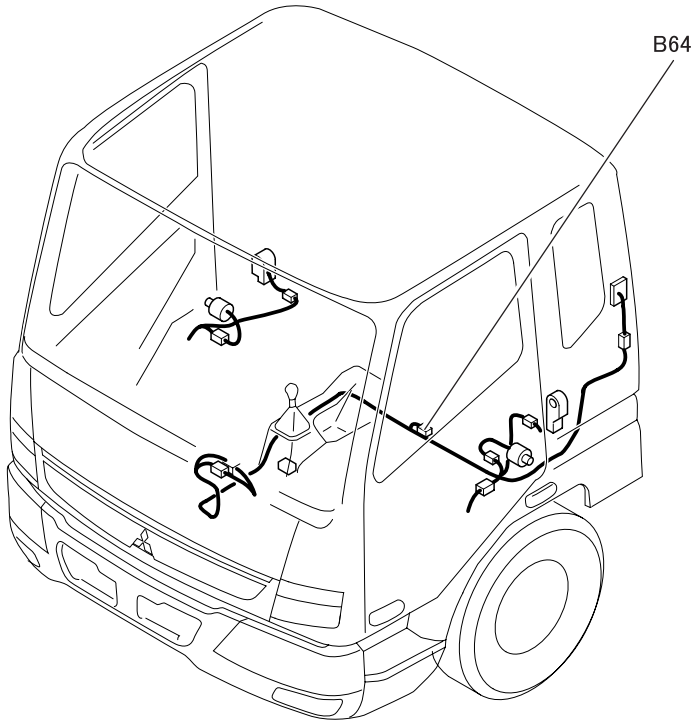

B61 A/T ECU
B62 Diode unit <FK (A/T)>
Resistor unit <FK (A/T)>
B63 Vehicle interface module <FM (A/T)>
B64 Diode unit <FK (A/T)>

A/T : Automatic transmission
ECU : Electronic control unit
ABS : Anti-lock brake system

Indicate by connector type [ ].

L02482

M E M O

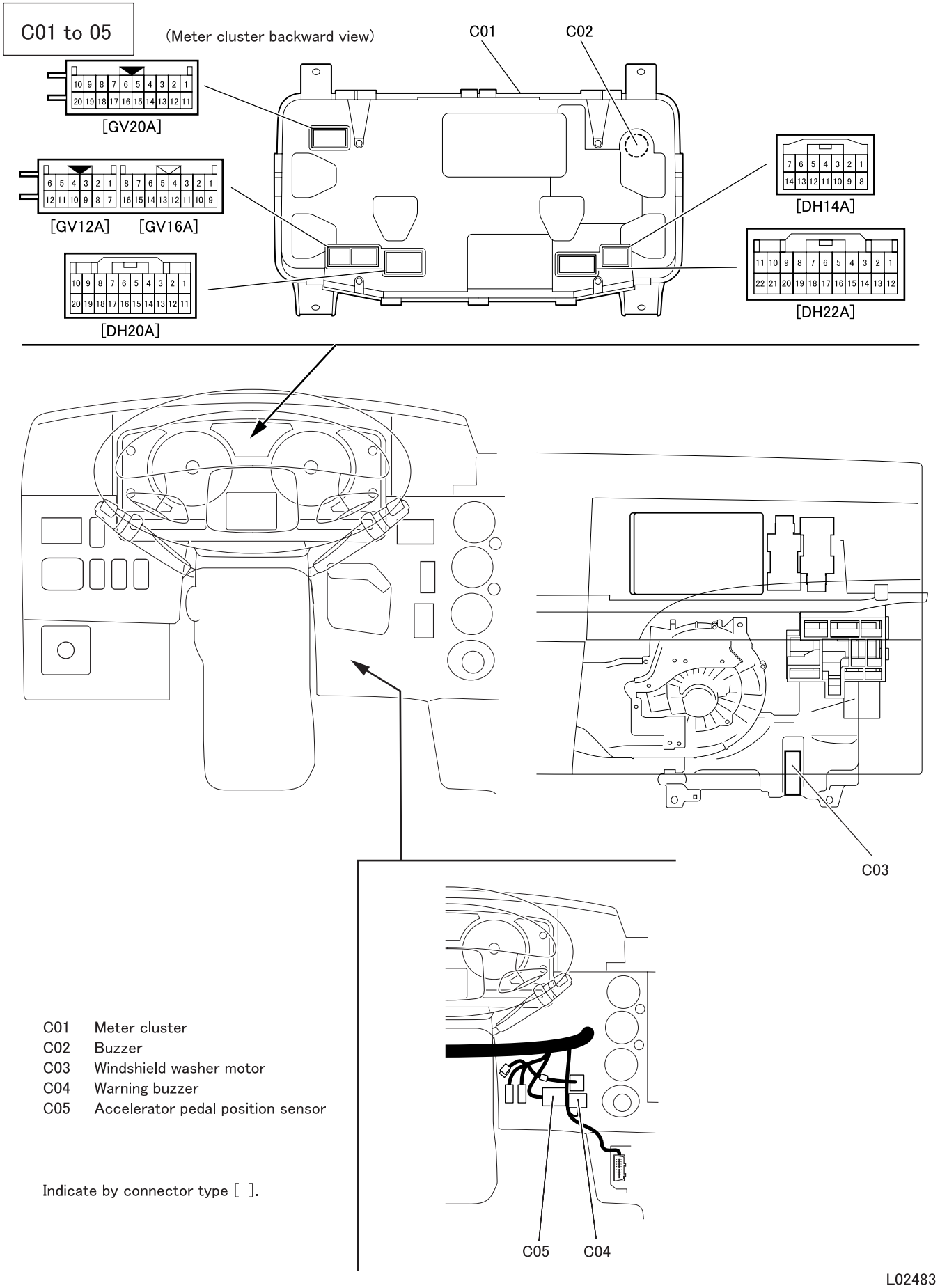

C01 Meter cluster
C02 Buzzer
C03 Windshield washer motor
C04 Warning buzzer
C05 Accelerator pedal position sensor

Indicate by connector type [ ].

L02483

C11 to 14

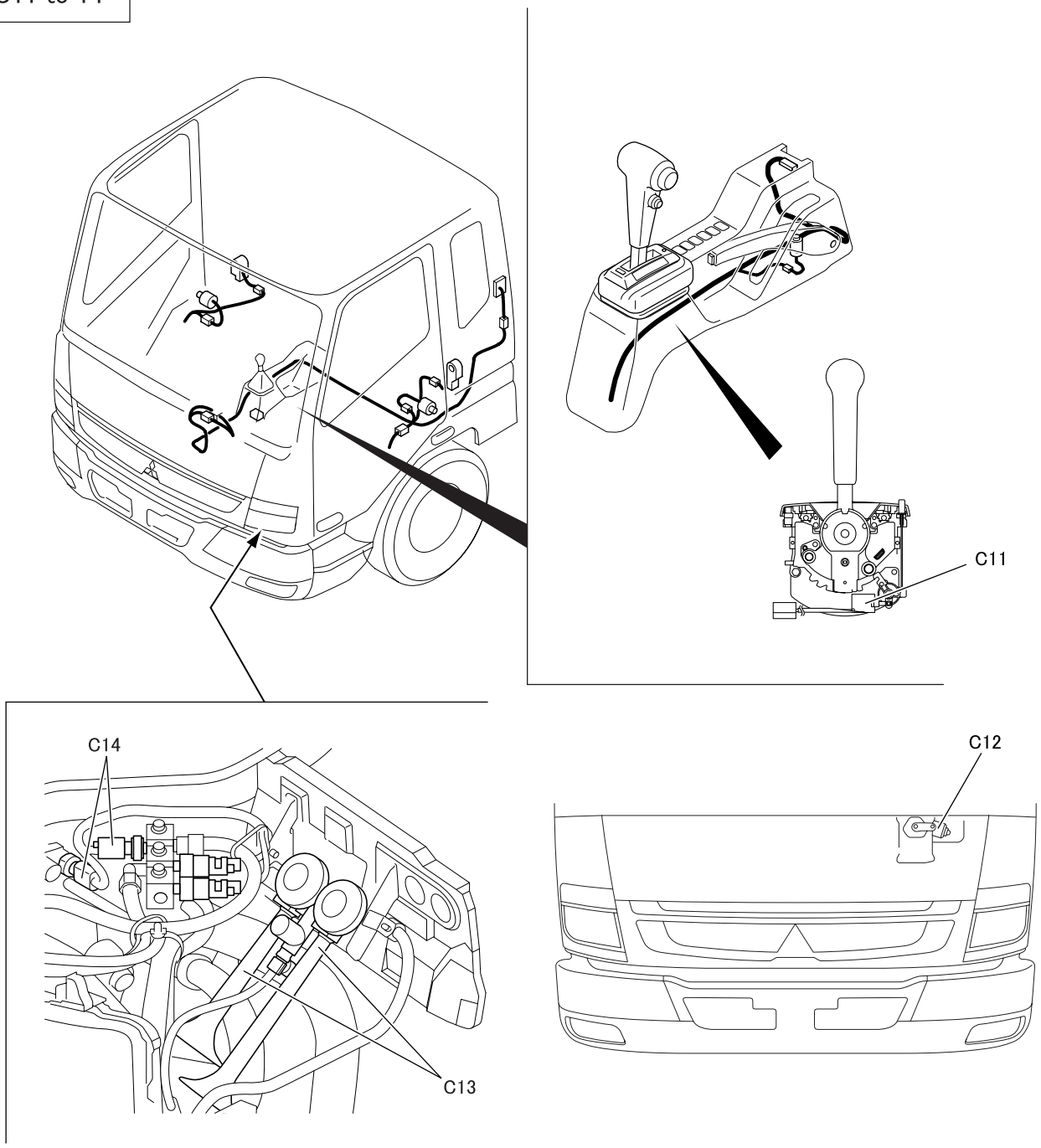

C11 Shift lock actuator <FK (A/T)>
C12 Wiper motor
C13 Air horn
C14 Air pressure sensor

A/T : Automatic transmission

L02484

D01 to 06

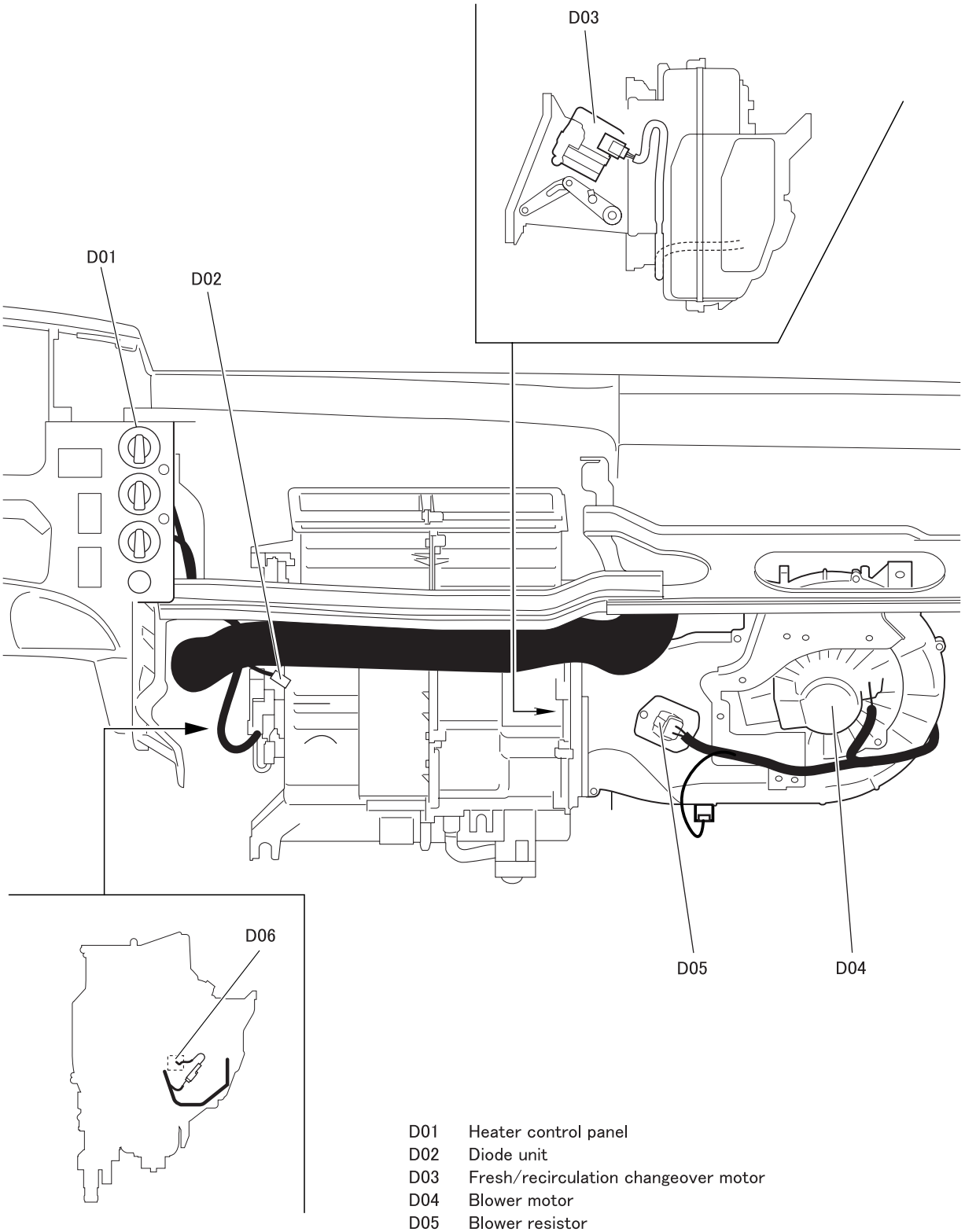

D01 Heater control panel
D02 Diode unit
D03 Fresh/recirculation changeover motor
D04 Blower motor
D05 Blower resistor
D06 Thermostat

L02485

E01 to 05

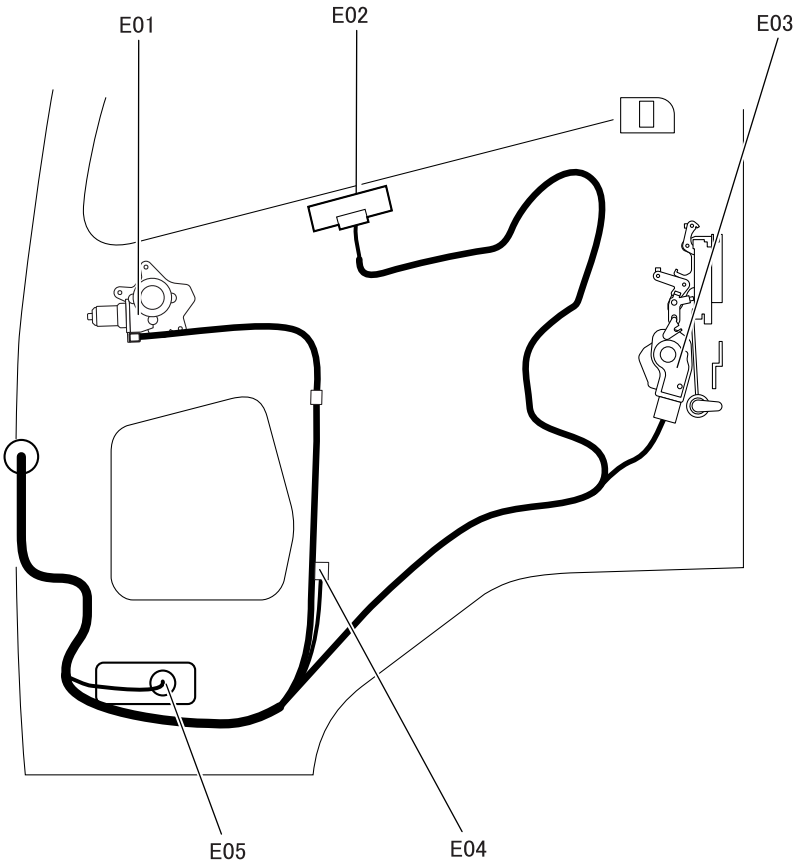

This illustrations show the right side door, the left side door is symmetrical.

E01 Power window motor
E02 Power window switch
E03 Door lock actuator
E04 Mirror heater connector
E05 Front side turn signal lamp ＜FK61＞

L02486

F01 to 11

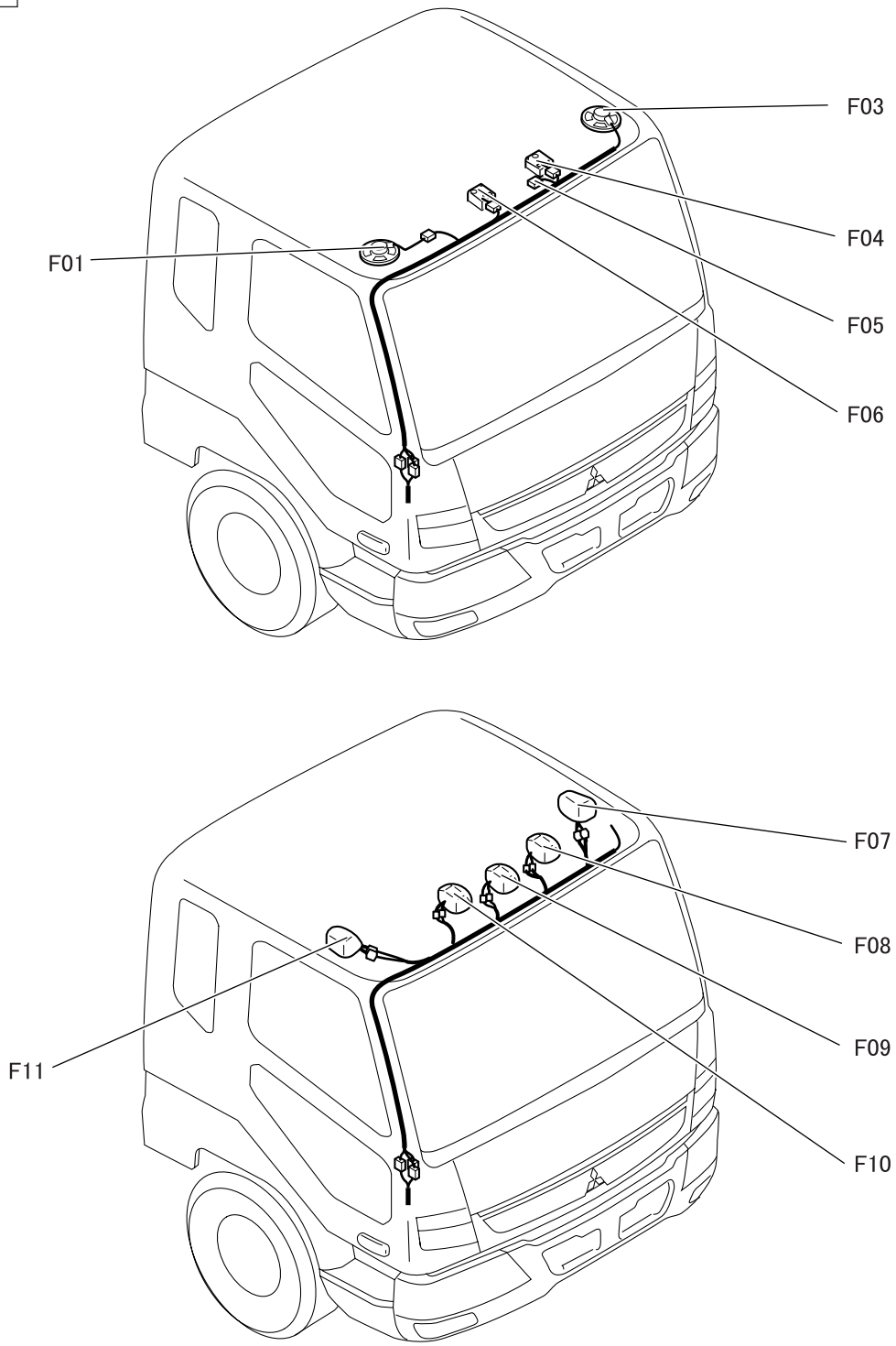

F01 Speaker, RH
F03 Speaker, LH
F04 Personal lamp, LH
F05 Spare D.C connector
F06 Personal lamp, RH
F07 Clearance and side marker lamp, LH
F08 Identification lamp, LH
F09 Identification lamp, CENTER
F10 Identification lamp, RH
F11 Clearance and side marker lamp, RH

L02487

G01 to 04

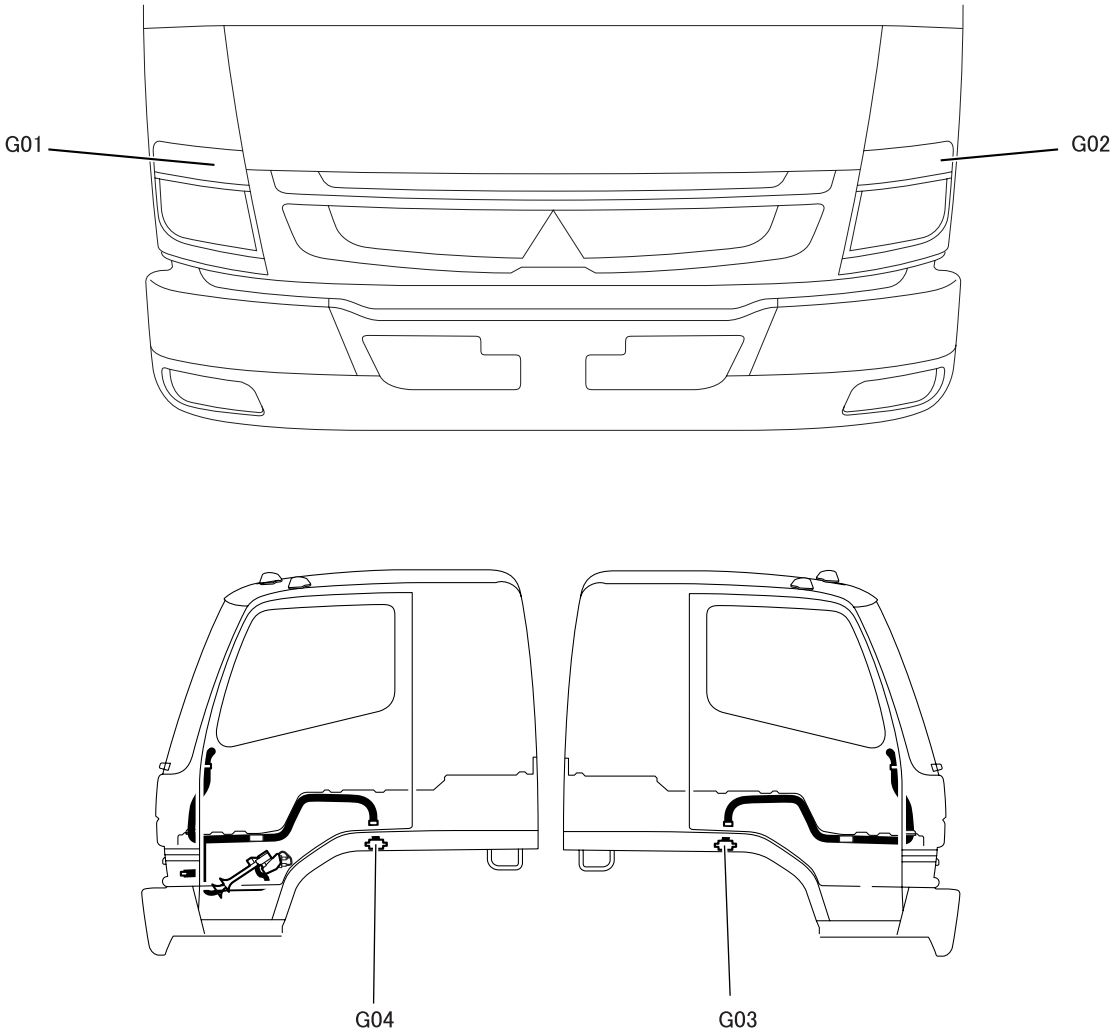

G01 Front turn signal lamp, RH
G02 Front turn signal lamp, LH
G03 Side turn signal lamp, RH <Except FK61>
G04 Side turn signal lamp, LH <Except FK61>

L02488

H01

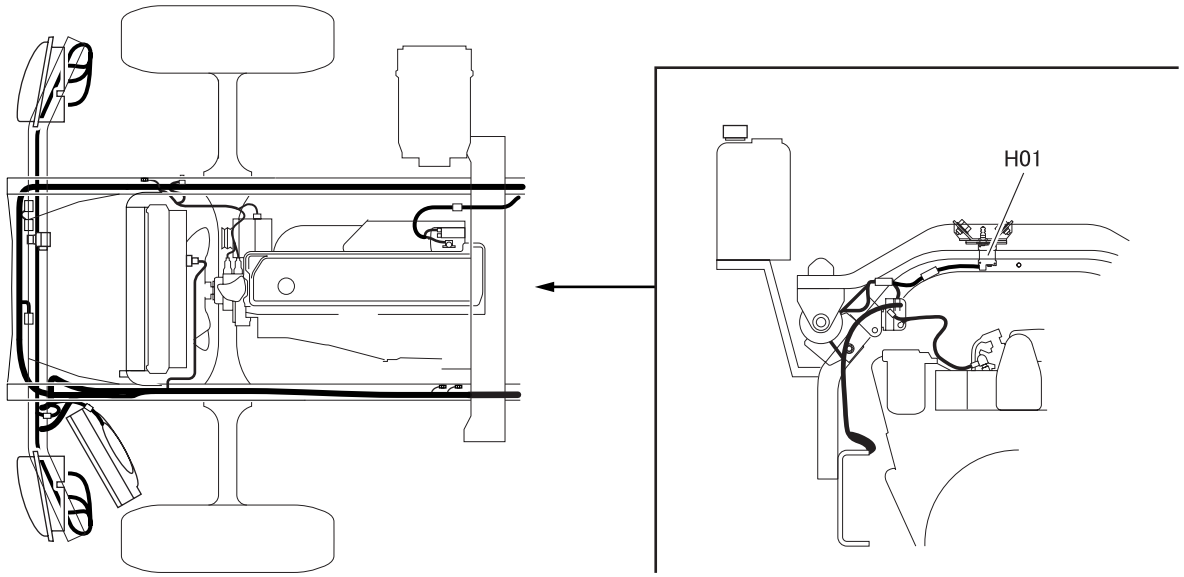

H01 Cab tilt lock switch

L02489

M E M O

J JOINTS OF MAIN HARNESS CONNECTORS

J01 to 11

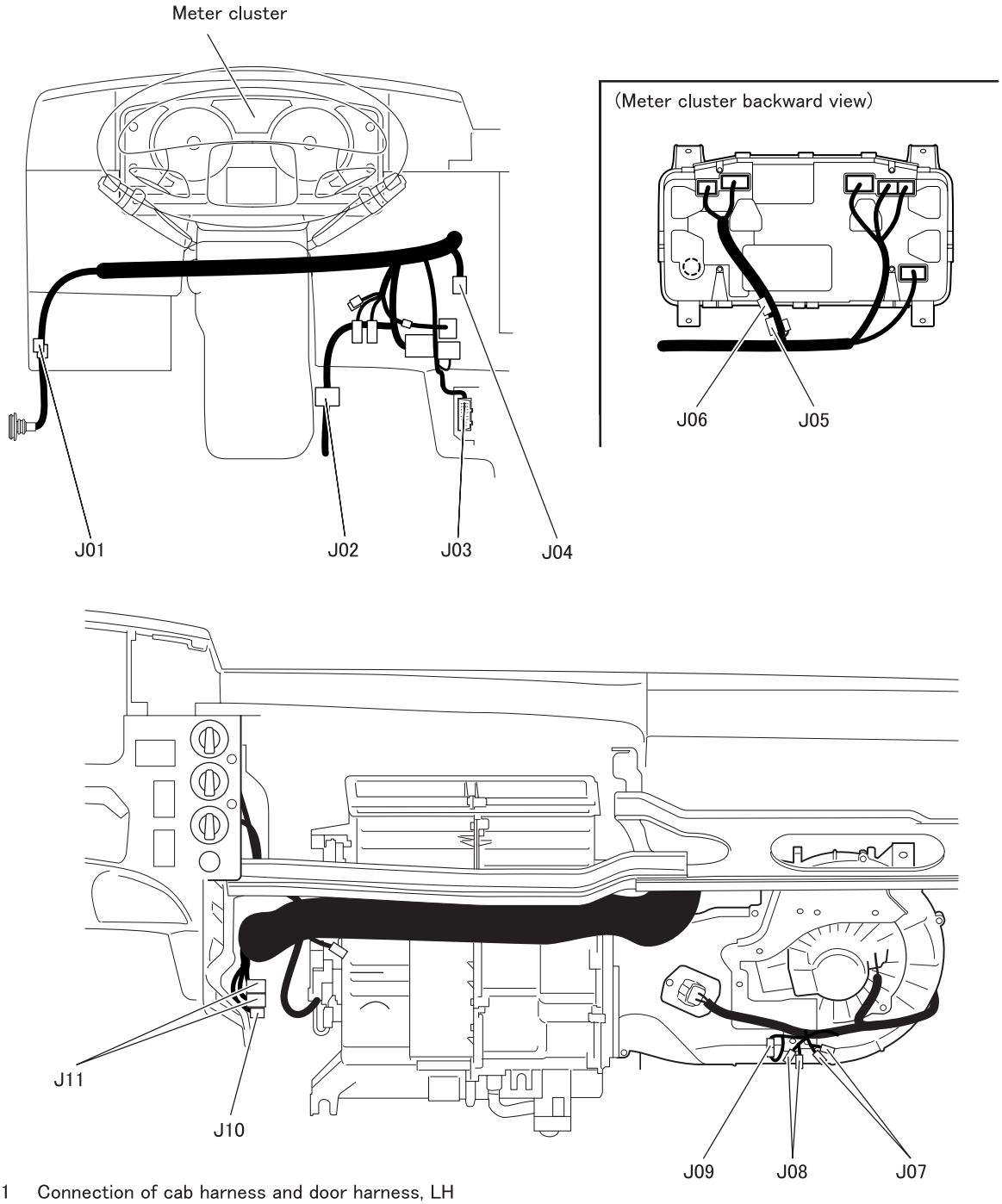

J01 Connection of cab harness and door harness, LH
J02 Connection of cab harness and headlamp harness
J03 Diagnostic connector
J04 Connection of cab harness and front panel harness
J05 Joint connector (J/C–6)
J06 Joint connector (J/C–2)
J07 Connector (for cab back)
J08 Connector (for mixer)
J09 Connector
J10 Connection of cab harness and center floor harness
J11 Connection of cab harness and A/T harness

A/T : Automatic transmission

L02490

J21 to 40

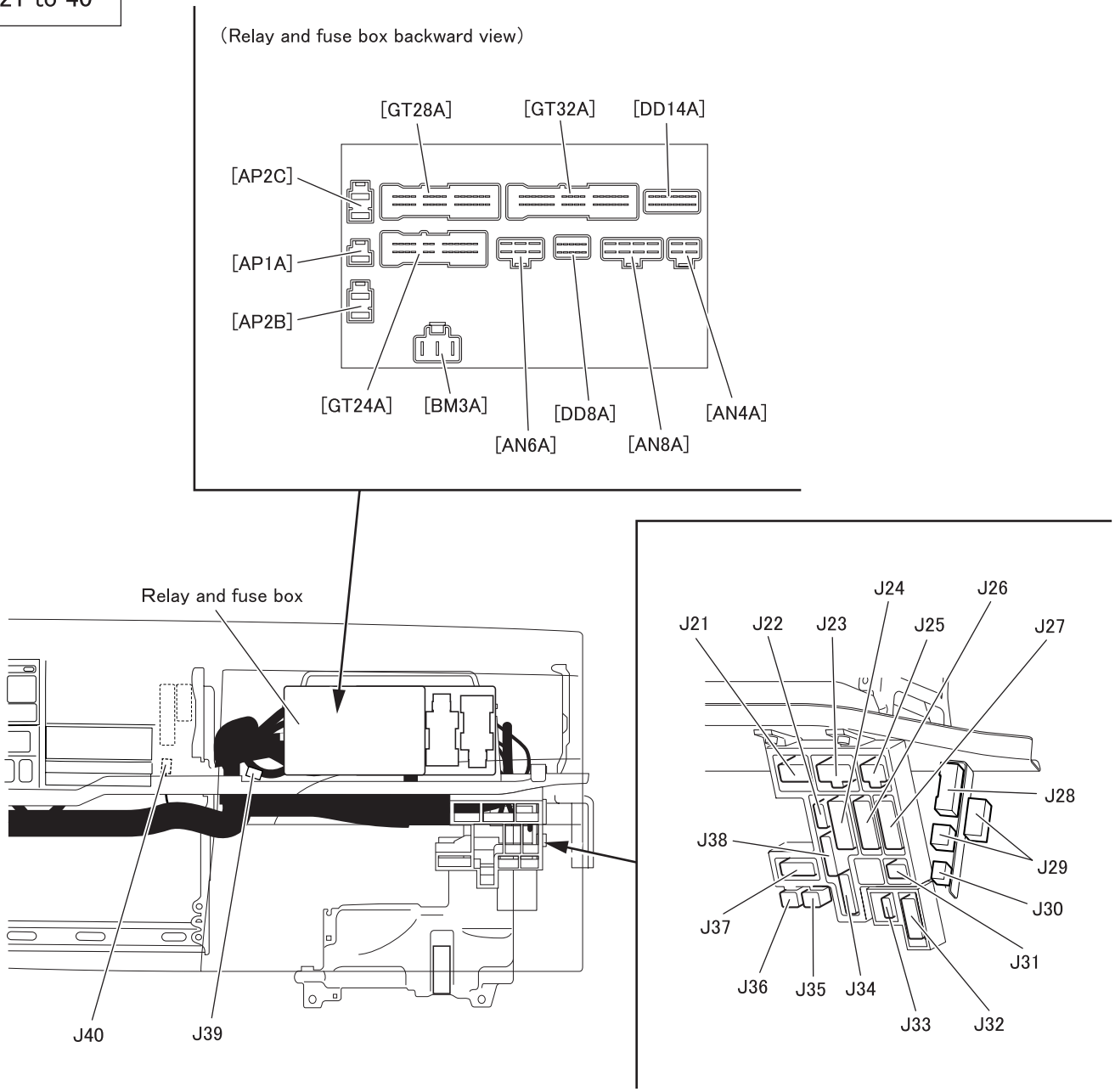

J21–27	Connection of cab harness and chassis harness
J28	Connection of cab harness and door harness, RH
J29	Connection of cab harness and roof harness
J30	Connection of cab harness and floor harness, RH
J31	Connection of cab harness and chassis harness
J32, J33	Connection of chassis harness and A/T harness
J34–38	Connection of cab harness and engine control harness
J39	Joint connector (J/C-1, 3, 4)
J40	Spare D.C connector

A/T : Automatic transmission
Indicate by connector type [ ].

L02491

J JOINTS OF MAIN HARNESS CONNECTORS

J51 to 52

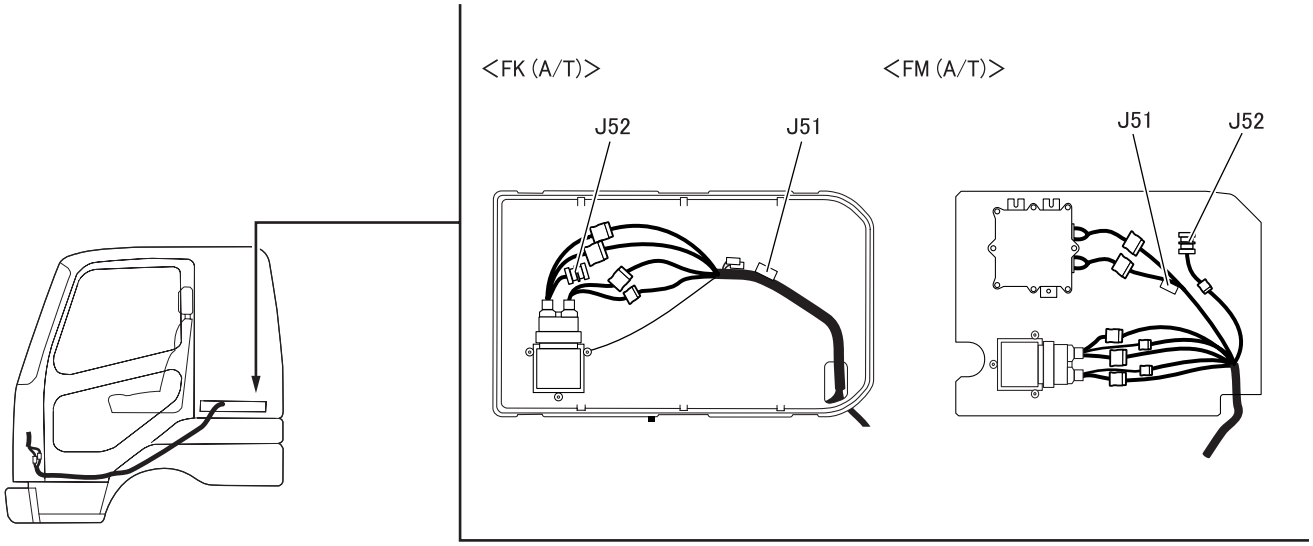

J51 Joint connector (J/C) <A/T>
J52 Diagnostic connector (for allison exclusive diagnosis tool)

L02492

R01 to 22

(Front view)

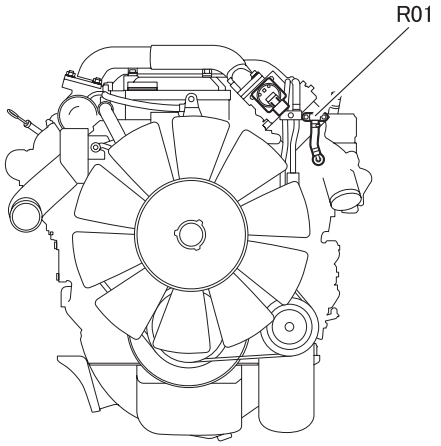

(Upper view)

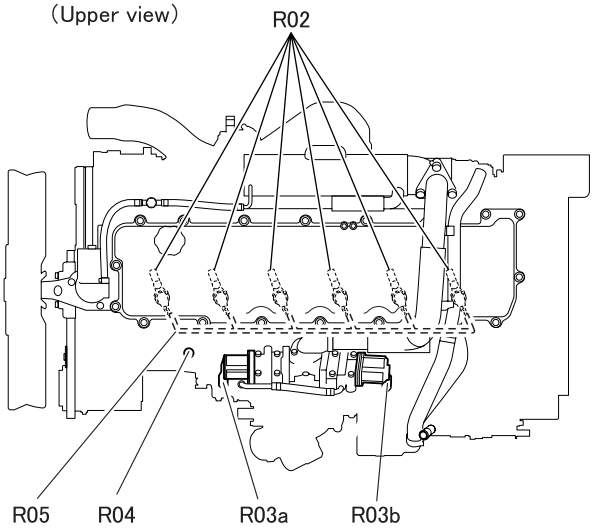

(Right side view)

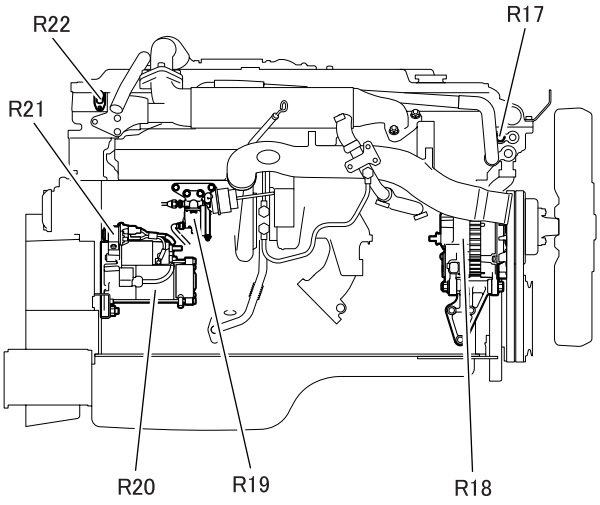

(Left side view)

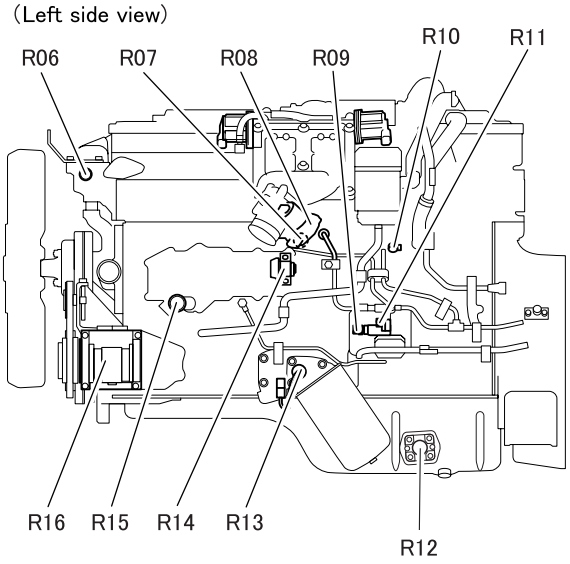

R01 Boost pressure sensor
R02 Injector magnetic valve
R03a EGR valve 1
(building into motor, position sensor)
R03b EGR valve 3
(building into motor, position sensor)
R04 Boost air temperature sensor
R05 Glow plug
R06 Overheating switch
R07 Common rail pressure sensor
R08 Throttle actuator
(building into motor, position sensor)
R09 Fuel temperature sensor (Inlet)
R10 Fuel temperature sensor (Outlet)
R11 Suction control valve
R12 Engine oil level sensor
R13 Engine oil bypass alarm switch
R14 Glow relay
R15 Engine oil pressure switch
R16 Magnetic clutch
R17 Water temperature sensor
(connects to engine electronic control unit)
R18 Alternator
R19 Waste gate magnetic valve
R20 Starter
R21 Starter relay
R22 Cylinder recognition sensor

EGR : Exhaust gas recirculation

L02499

S01 to 04 ＜Manual transmission＞

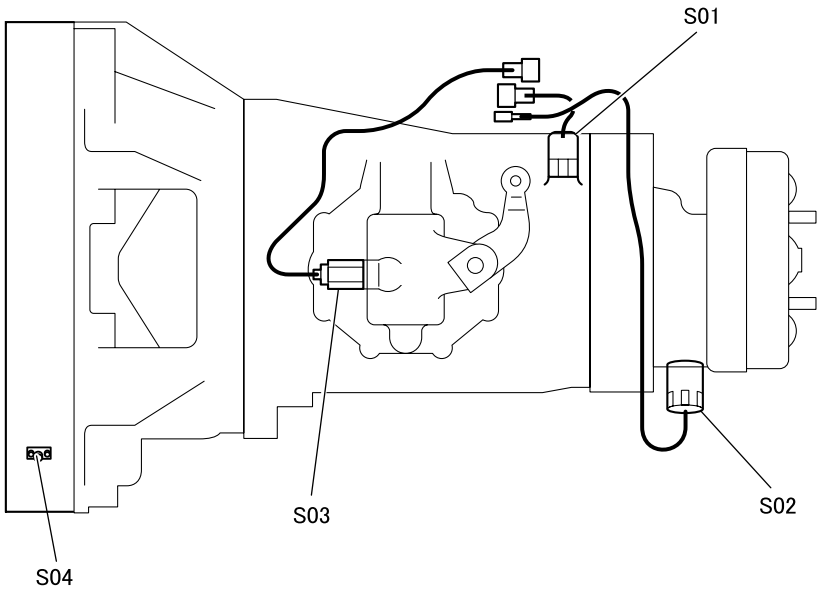

S01 Backup lamp switch
S02 Vehicle speed sensor
S03 Transmission neutral switch
S04 Engine speed sensor

L02500

S04 to 12 <Automatic transmission>

<FK>

(Left side view)

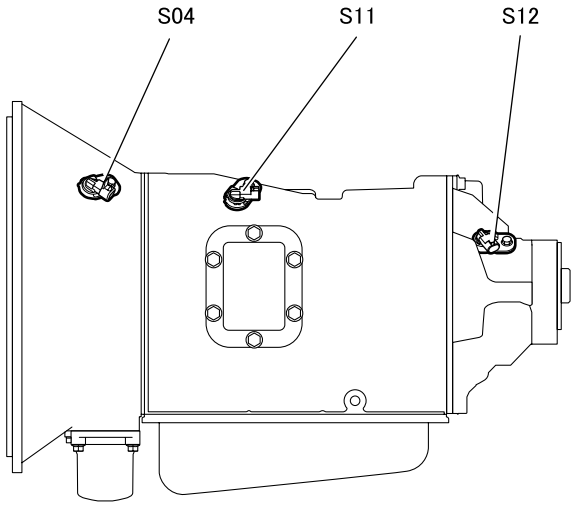

<FM>

(Upper view)

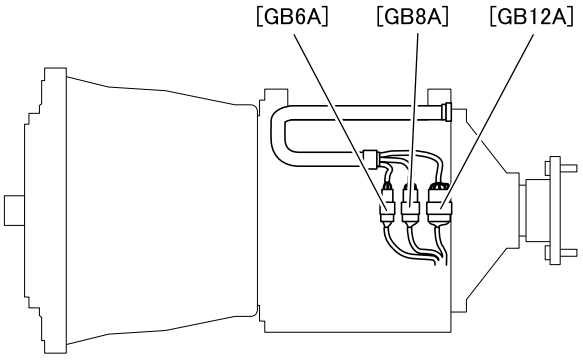

S04 Engine speed sensor
S11 Turbine speed sensor
S12 Output speed sensor

L02501

T01 to 13 <FK (air over hydraulic brake)>

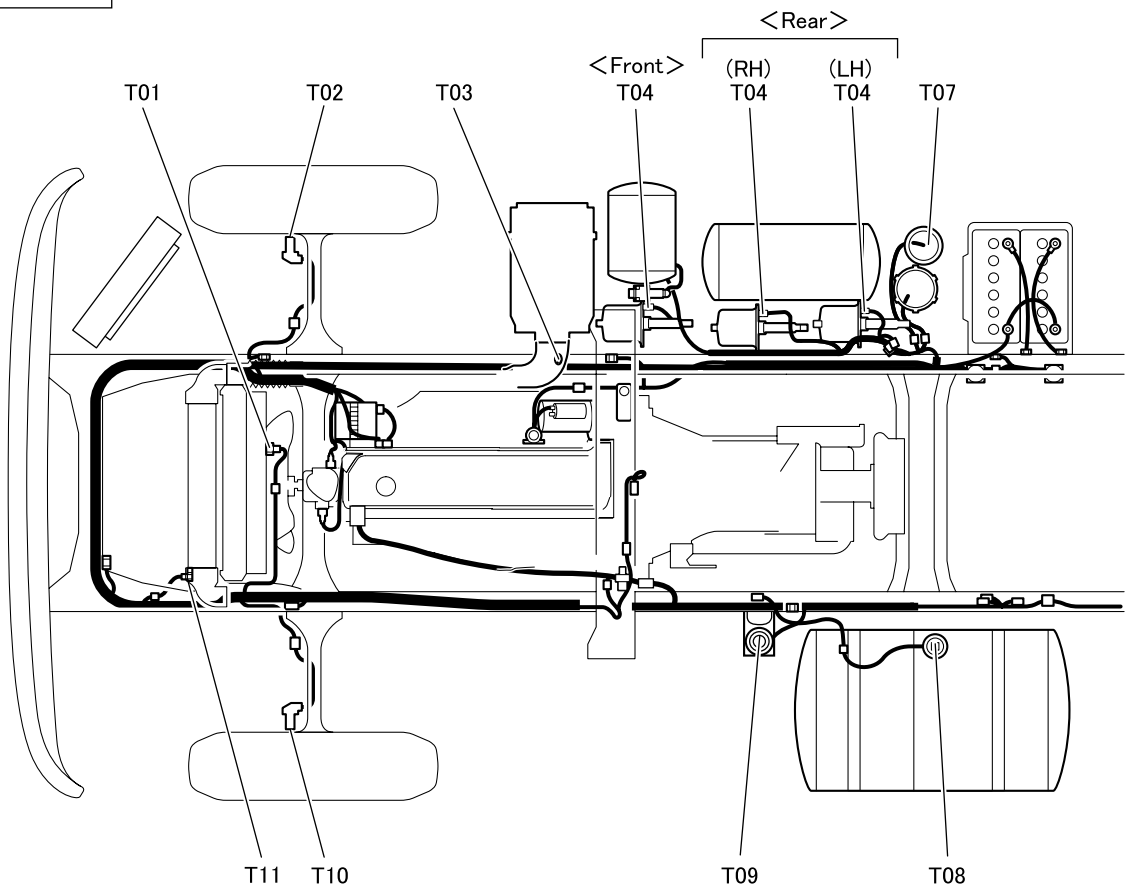

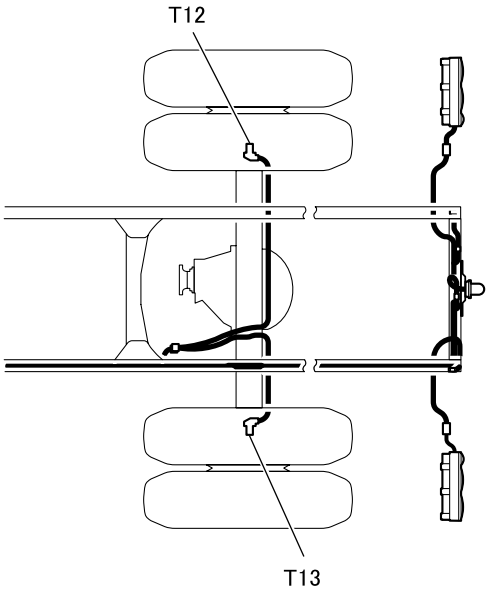

T01 Water level sensor
T02 Front wheel speed sensor, RH
T03 Air flow sensor
T04 Brake booster stroke switch
T07 Brake fluid level switch
T08 Fuel level sensor
T09 Water separator sensor
T10 Front wheel speed sensor, LH
T11 Intake air temperature sensor
T12 Rear wheel speed sensor, RH
T13 Rear wheel speed sensor, LH

L02502

T01 to 14 <FK (full air brake)>

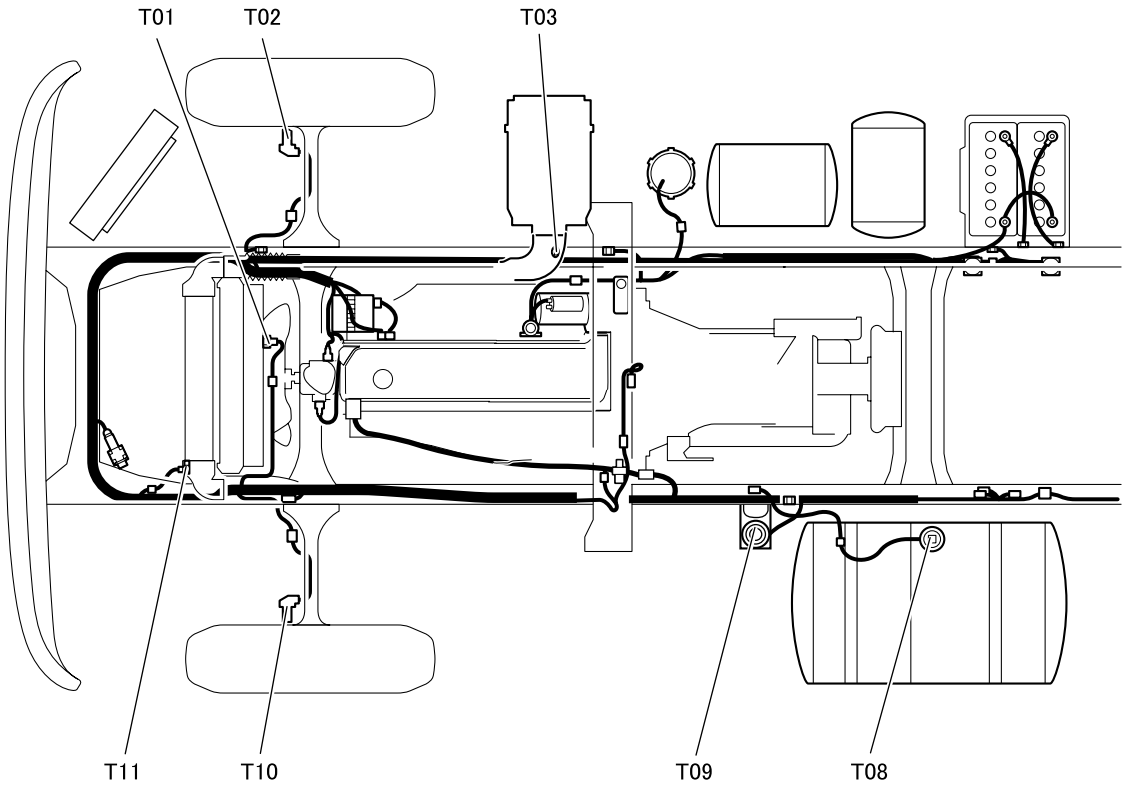

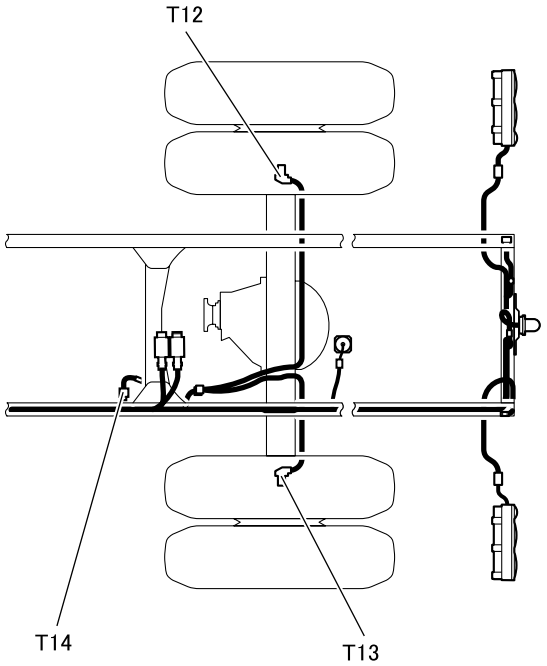

T01 Water level sensor
T02 Front wheel speed sensor, RH
T03 Air flow sensor
T08 Fuel level sensor
T09 Water separator sensor
T10 Front wheel speed sensor, LH
T11 Intake air temperature sensor
T12 Rear wheel speed sensor, RH
T13 Rear wheel speed sensor, LH
T14 Parking brake switch

L02503

T01 to 14 <FM>

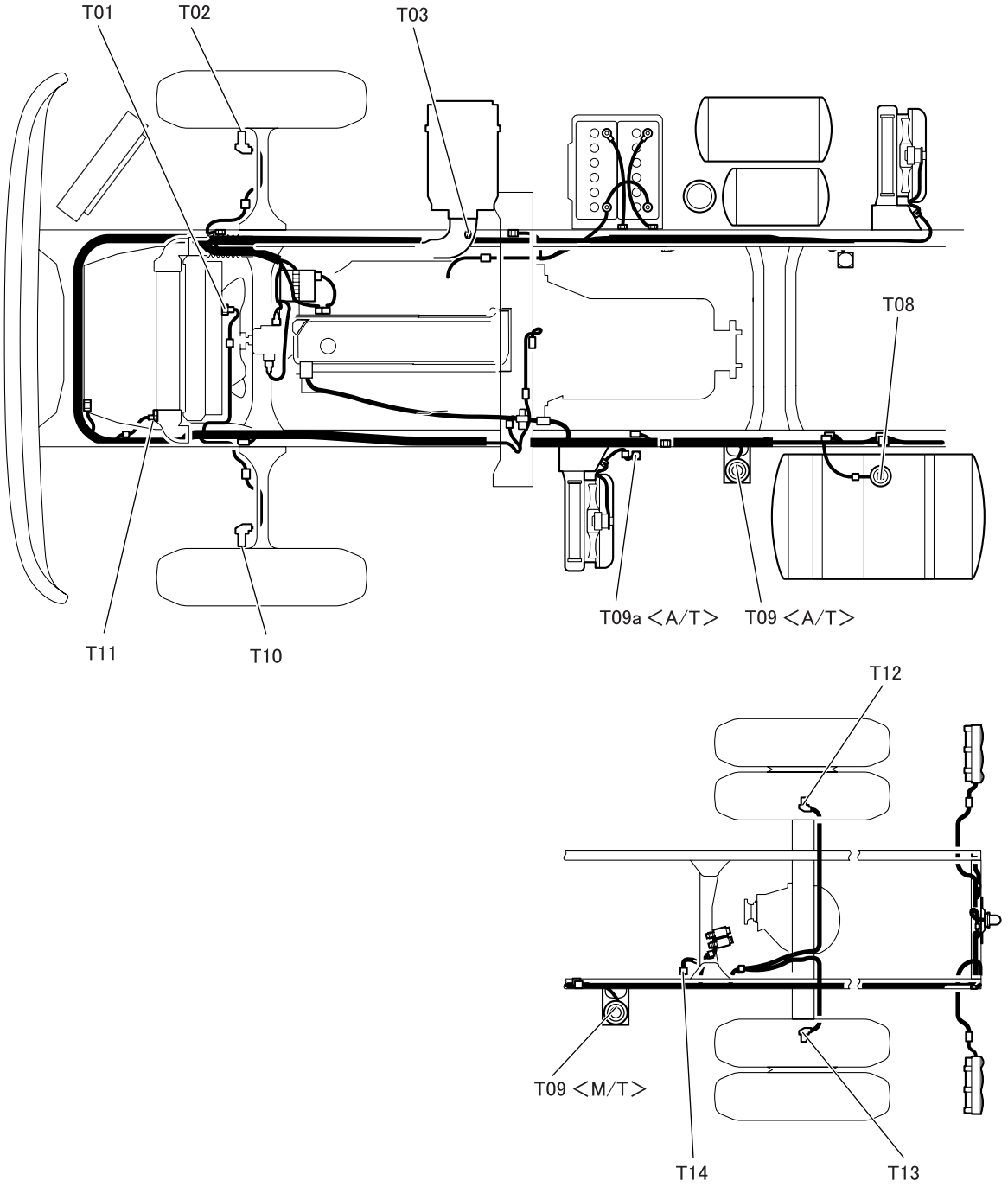

T01 Water level sensor
T02 Front wheel speed sensor, RH
T03 Air flow sensor
T08 Fuel level sensor
T09 Water separator sensor
T09a A/T fluid temperature switch
T10 Front wheel speed sensor, LH
T11 Intake air temperature sensor
T12 Rear wheel speed sensor, RH
T13 Rear wheel speed sensor, LH
T14 Parking brake switch

M/T : Manual transmission
A/T : Automatic transmission

L02504

T21 to 25

<FK>

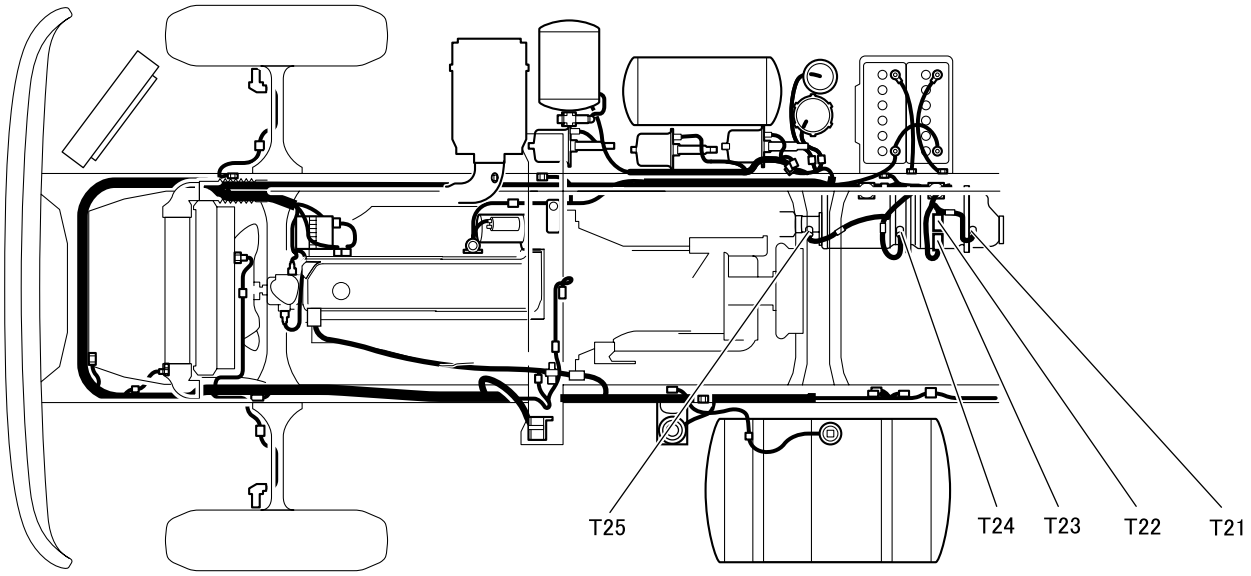

<FM>

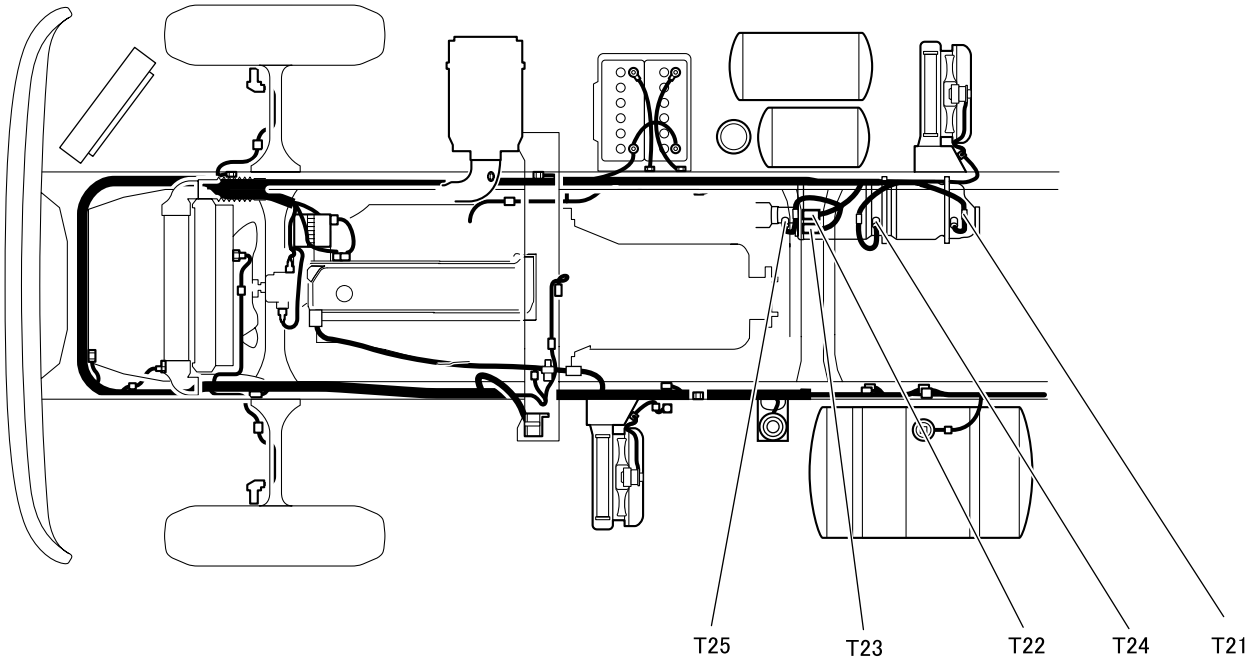

T21 DPF temperature sensor 2
T22 DPF absolute pressure sensor
T23 DPF differential pressure sensor
T24 DPF temperature sensor 1
T25 Catalytic temperature sensor

DPF : Diesel particulate filter

L02505

U01 to 14

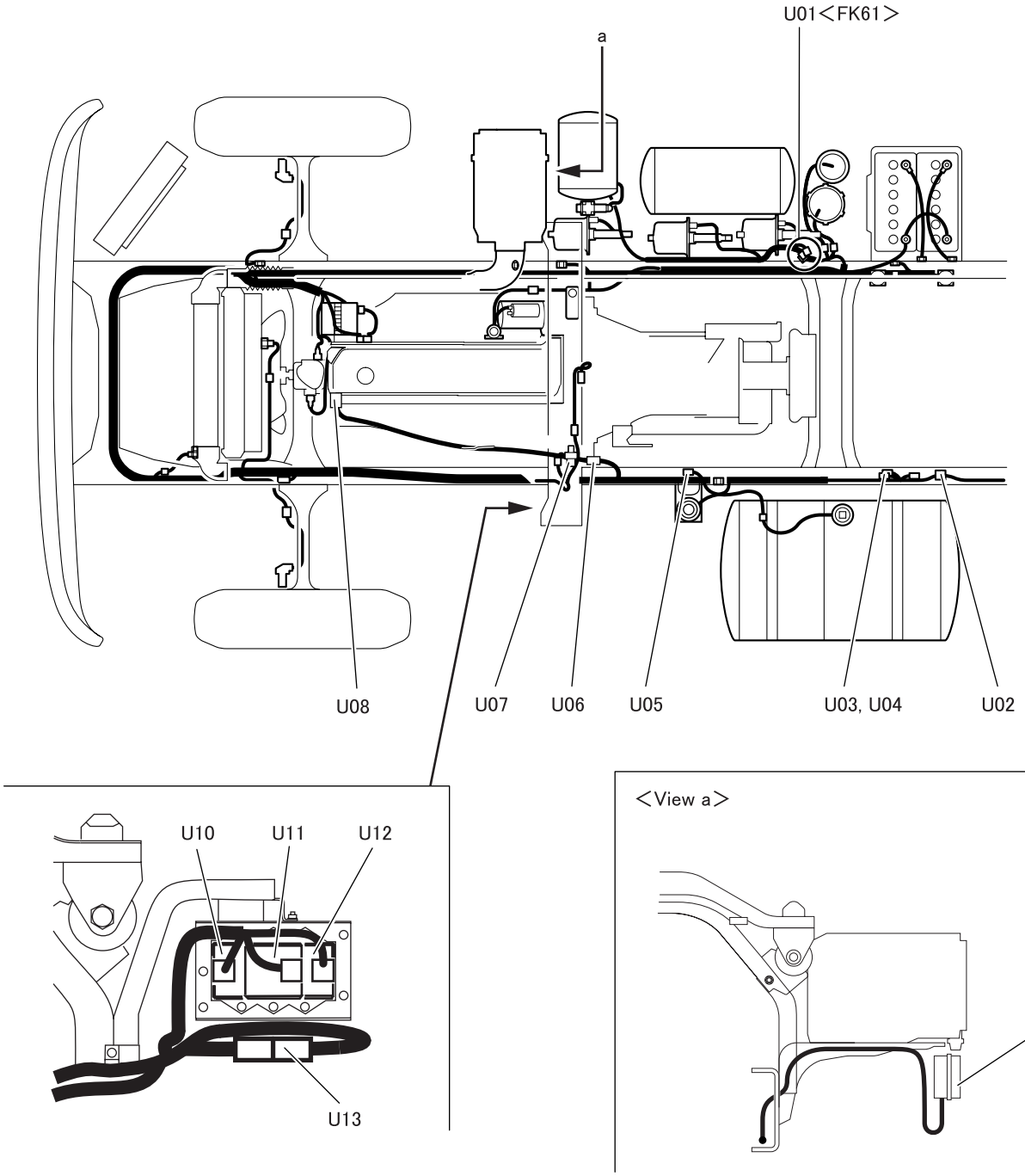

U01 Connection of chassis harness and anti-lock brake system control harness
U02 Connection of chassis harness and rear chassis harness
U03 Van body dome light connector
U04 Spare tail lamp connector
U05 Transmission power take-off control switch connector
U06 Connection of chassis harness and engine harness
U07 Transmission power take-off load sensor connector
U08 Connection of engine harness and injector harness
U10 EGR EDU 3
U11 Throttle EDU
U12 EGR EDU 1
U13 Connection of engine harness and engine control harness
U14 High-current fuse box

EDU : Electronic drive unit
EGR : Exhaust gas recirculation

L03435

M E M O

V MAGNETIC VALVE W BUZZER

V01 to 05, W01 <FK>

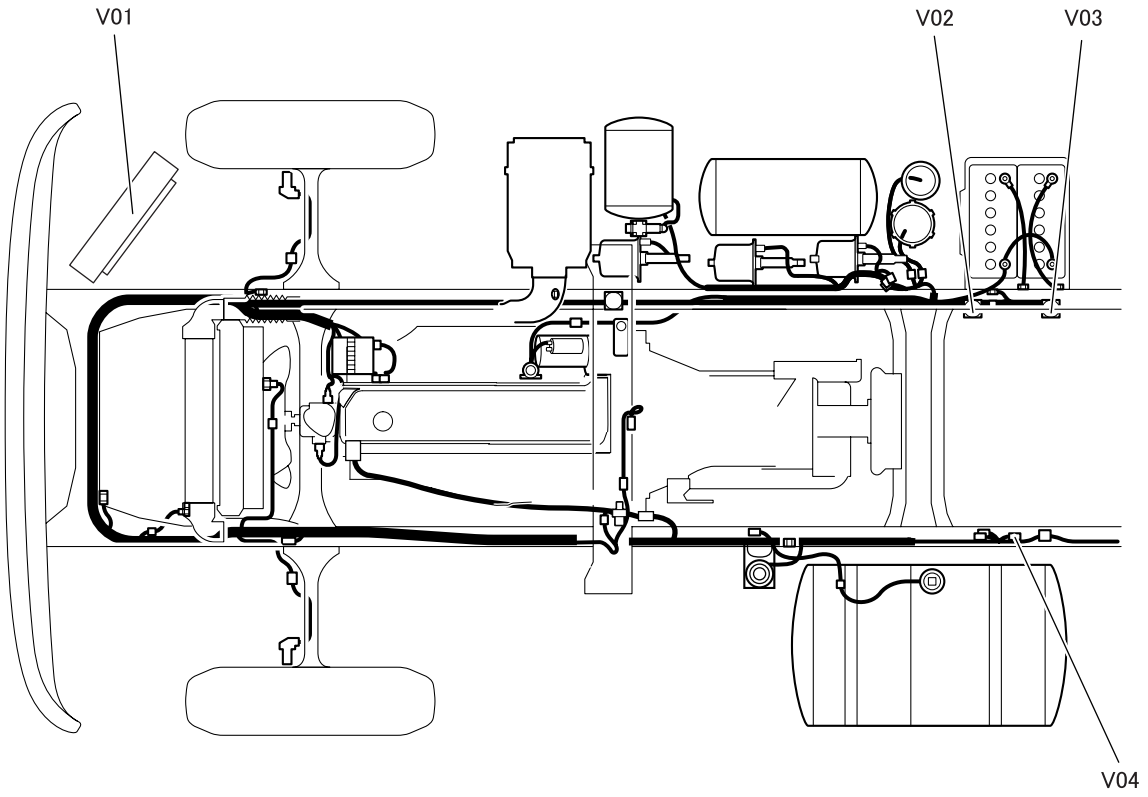

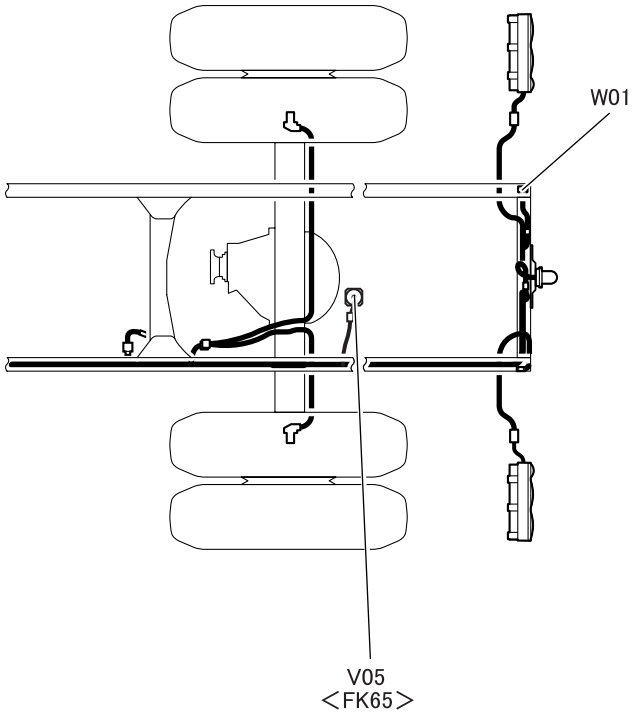

V

V01	Condenser fan motor
V02	Exhaust shutter 3-way magnetic valve 1
V03	Exhaust shutter 3-way magnetic valve 2
V04	Transmission power take-off 3-way magnetic valve connector
V05	Height control 3-way magnetic valve

W

W01	Back buzzer

L02507

V01 to 07, W01 <FM>

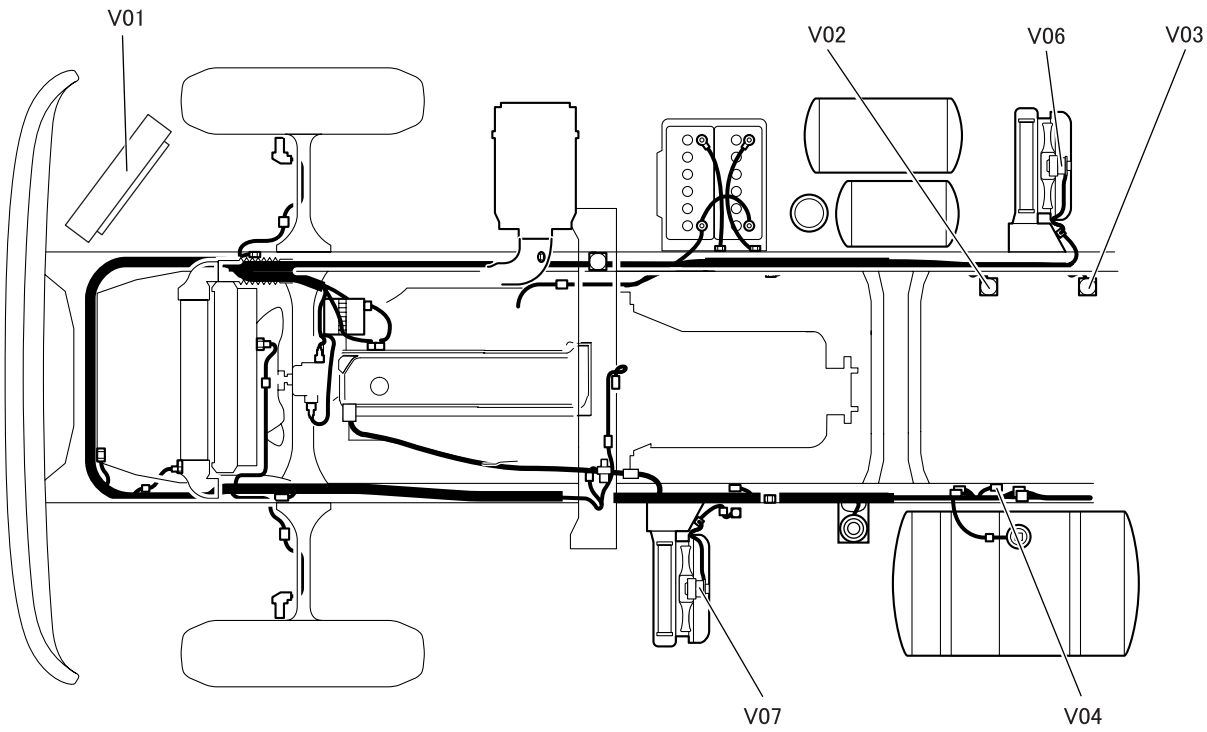

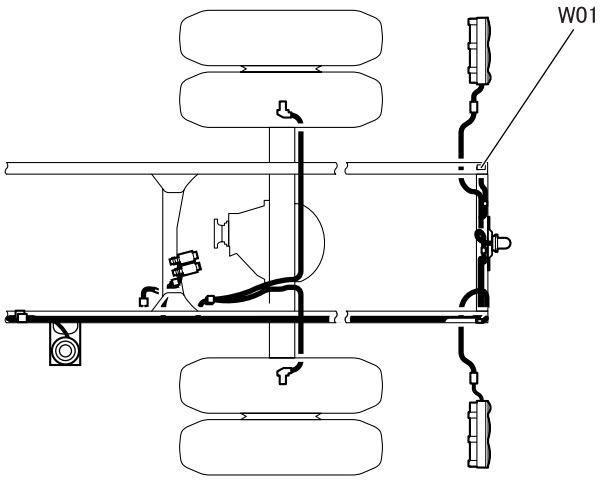

V

V01 Condenser fan motor
V02 Exhaust brake 3-way magnetic valve 1
V03 Exhaust brake 3-way magnetic valve 2
V04 Transmission power take-off 3-way magnetic valve connector
V06 Motor 2 <A/T>
V07 Motor 1 <A/T>

W

W01 Back buzzer

A/T : Automatic transmission

L02508

X01 to 04 <FK (air over hydraulic brake)>

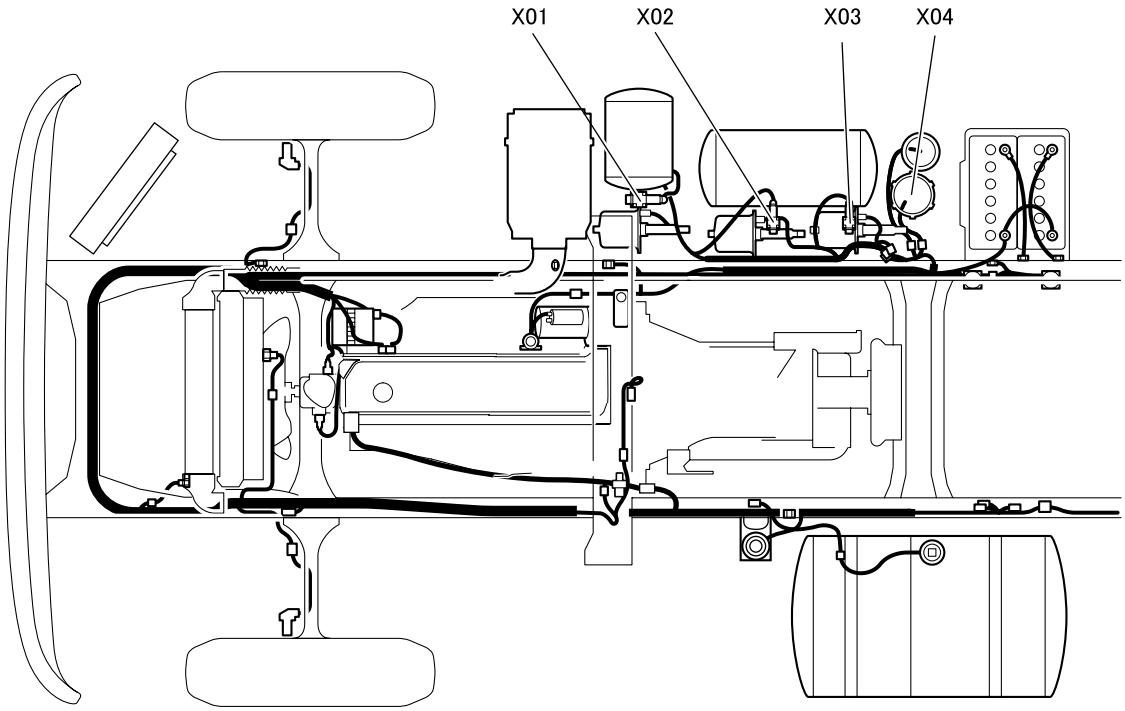

X01 ABS control valve (front)
X02 ABS control valve, LH (rear)
X03 ABS control valve, RH (rear)
X04 Air dryer

ABS : Anti-lock brake system

L02509

X01 to 04 <FK (full air brake)>

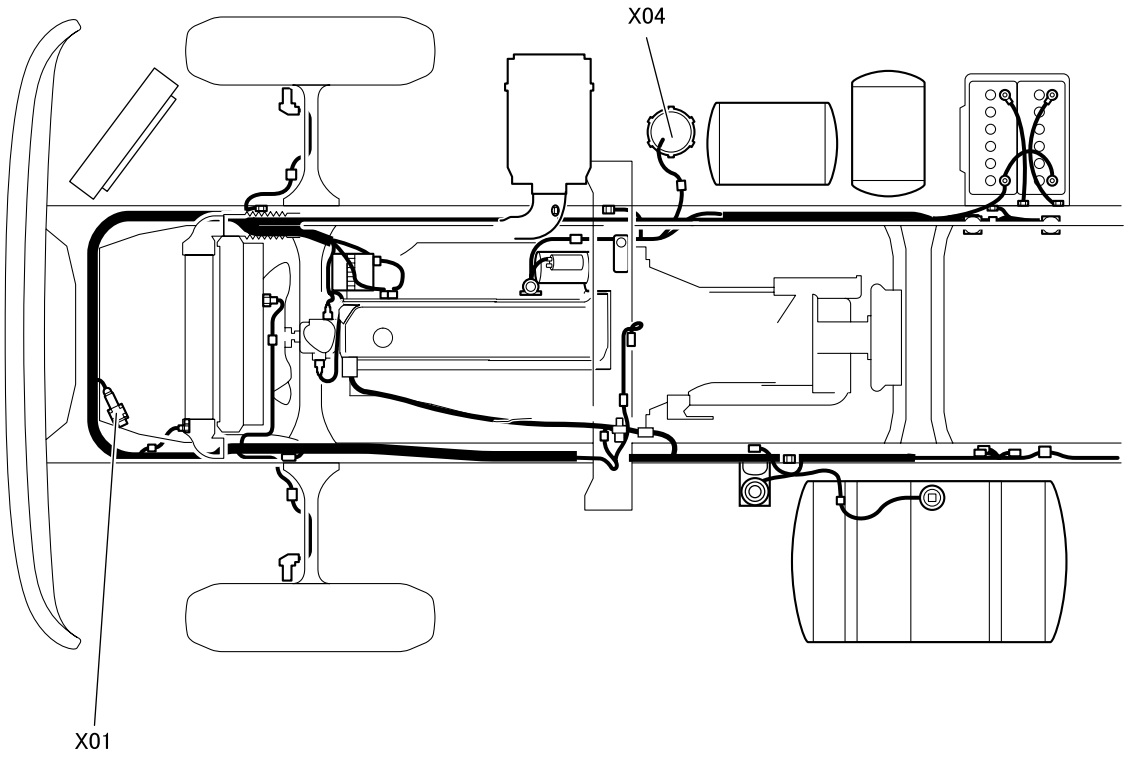

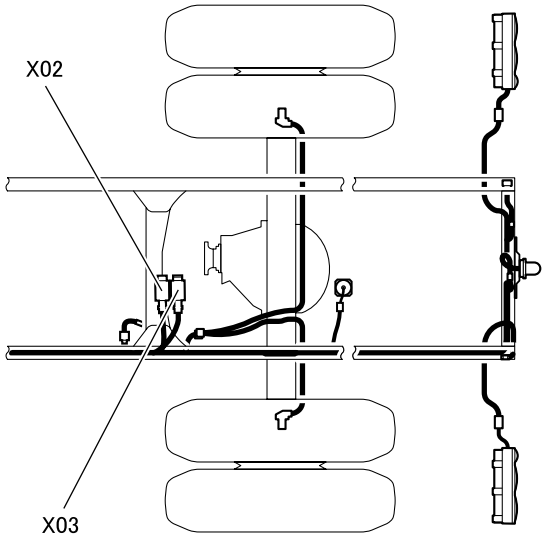

X01 ABS control valve (front)
X02 ABS control valve, LH (rear)
X03 ABS control valve, RH (rear)
X04 Air dryer

ABS : Anti-lock brake system

L02510

X01 to 04 <FM>

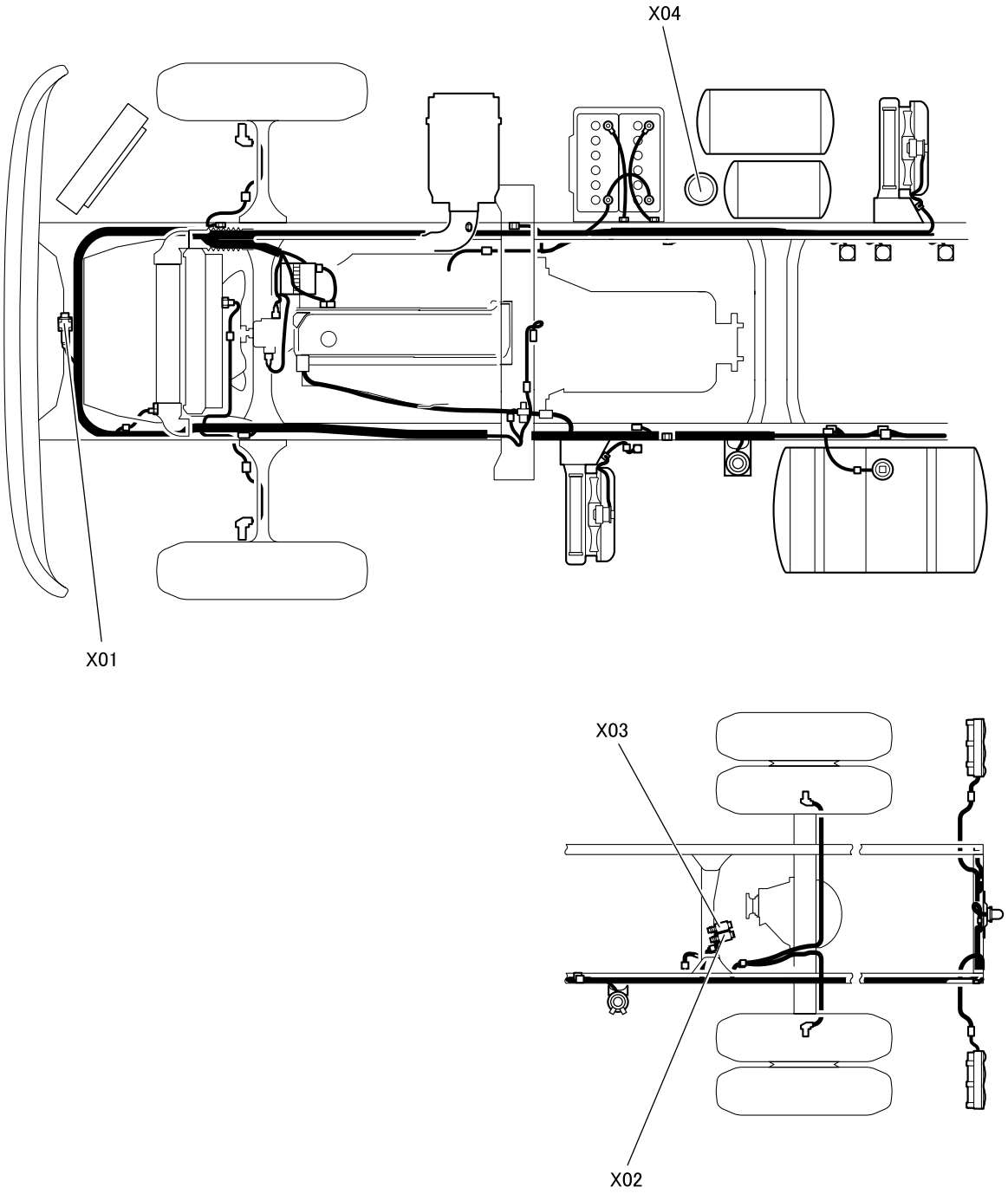

X01 ABS control valve (front)
X02 ABS control valve, LH (rear)
X03 ABS control valve, RH (rear)
X04 Air dryer

ABS : Anti-lock brake system

L02511

54-11 INSPECTION OF ELECTRICAL EQUIPMENT

#001 to #179 SWITCH

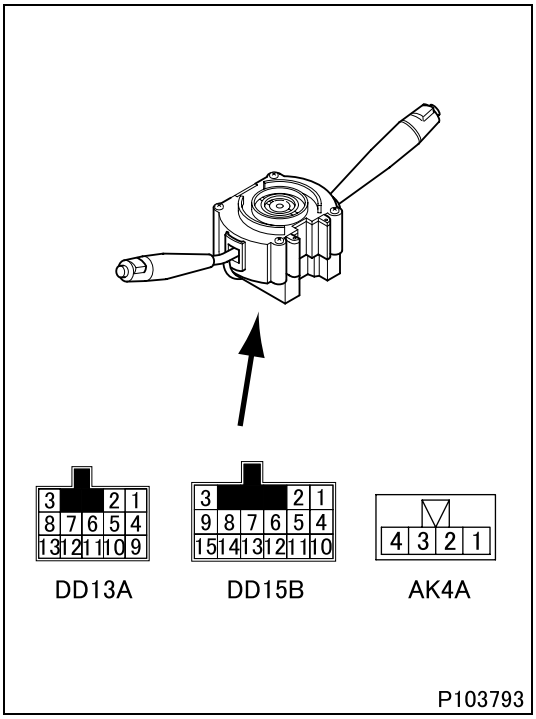

#001 Inspection of combination switch

AK4A connector connection table <Auto cruise>

Switch position		Continuity terminal
Set and resume switch and cancel switch	Set	1–3
	Cancel	3–4
	OFF	–
	Resume	2–3

DD15B connector connection table

Switch position			Continuity terminal
Lighting switch	OFF		–
	I		7–13
	II	Main	5–7–8–13
		Dimmer	5–6–7–13
Dimmer switch	Passing		7–8
Turn signal lamp switch	LH		2–9
	N (neutral)		–
	RH		3–9
Horn switch	OFF		–
	ON		1–Body ground

DD13A connector connection table

Switch position		Continuity terminal
Wiper and washer switch	OFF	–
	INT (interval)	10–13
	LO (low)	10–12
	HI (high)	10–11–12
	WASH (washer)	9–10
Exhaust brake switch	OFF	–
	ON	1–4
Hazard switch	OFF	–
	ON	5–6–7–8

- If any fault is found, replace the switch. (See Gr37.)

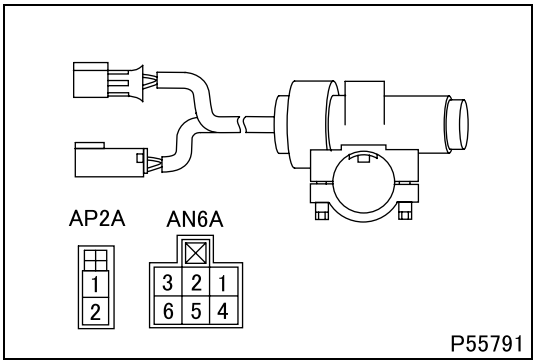

#002 Inspection of starter switch

AP2A, AN6A connector connection table

Switch position		Continuity terminal
LOCK	Without key	–
	With key	4–5
• (OFF)		4–5
ACC		(2)–2, 4–5
ON		(1)–(2)–2–3, 4–5
START		(1)–(2)–1–2–3, 4–5

- Terminal numbers within parentheses ( ) show terminals of AP2A.
- If any fault is found, replace the switch. (See Gr37.)

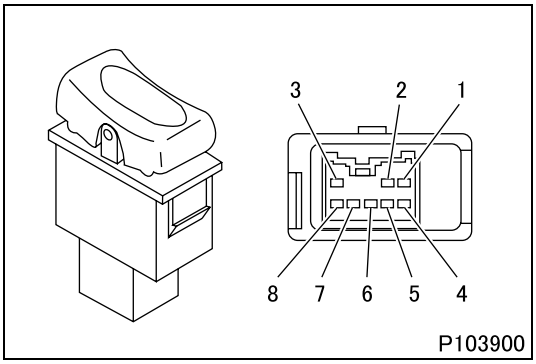

#007 Inspection of cruise control main switch

Switch position	Continuity terminal	Indicator light
OFF	–	–
N (neutral)	3–5	–
ON	3–5, 7–8	(+) 4–1 (–)

- If any fault is found, replace the switch.

#011 Inspection of rheostat switch

- The rheostat switch contains a control circuit, because of this it is difficult to inspect the rheostat switch independently, therefore you should inspect the rheostat switch indirectly by inspecting the system harness and the related parts.
- If no fault is found in the related parts but the system is faulty, replace the switch.

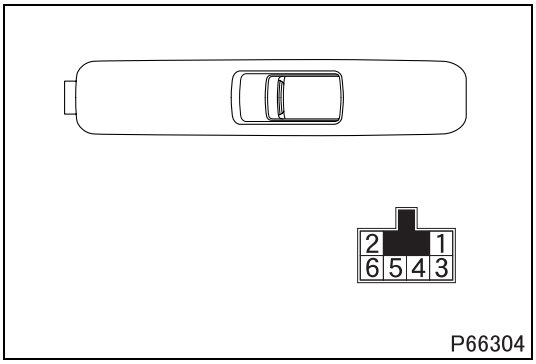

#026 Inspection of power window switch (assistant driver's seat side)

Switch position	Continuity terminal
UP	1–4
OFF	–
DOWN	1–5

- If any fault is found, replace the switch. (See Gr43.)

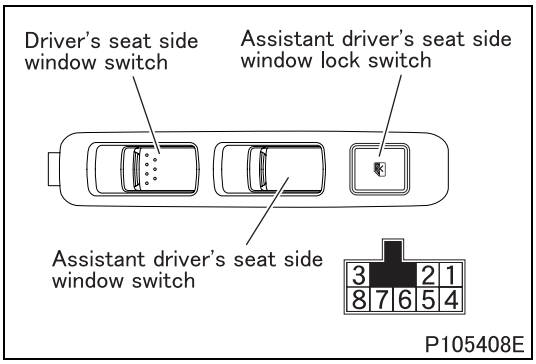

#027 Inspection of power window switch (driver's seat side)

Switch position			Continuity terminal
Driver's seat side window switch		UP	1–4
		OFF	–
		DOWN	1–5
Assistant driver's seat side window switch	UN-LOCK	UP	1–6
		OFF	–
		DOWN	1–7
	LOCK	UP	1–2–6
		OFF	–
		DOWN	1–2–7

- If any fault is found, replace the switch. (See Gr43.)

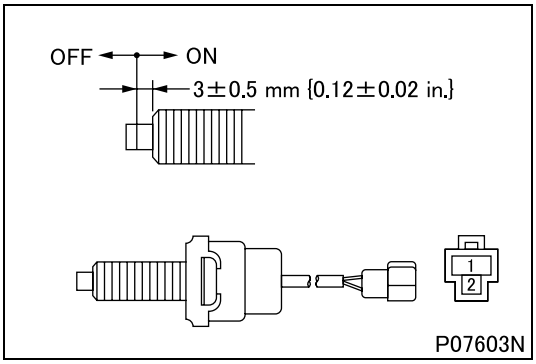

#029 Inspection of accelerator switch

Switch position	Continuity terminal
OFF	–
ON	1–2

- If any fault is found, replace the switch.

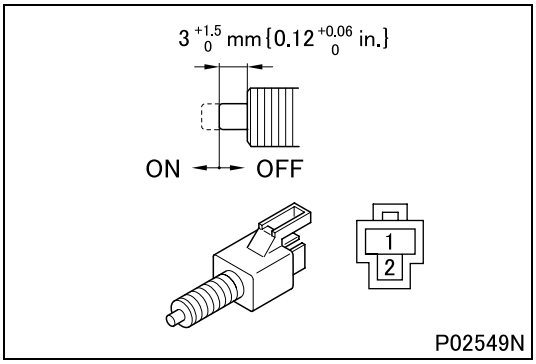

#031 Inspection of clutch switch

Switch position	Continuity terminal
OFF	–
ON	1–2

- If any fault is found, replace the switch. (See Gr21.)

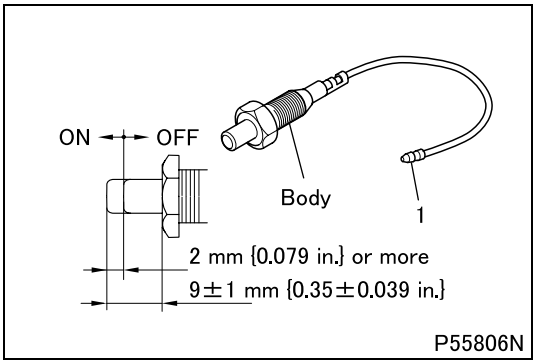

#035 Inspection of door switch

Switch position	Continuity terminal
OFF	–
ON	1–body

- If any fault is found, replace the switch. (See Gr43.)

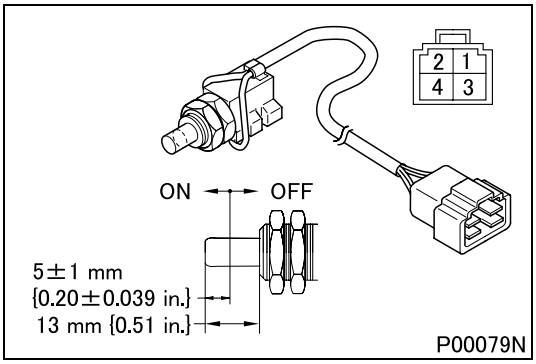

#038 Inspection of parking brake switch

Switch position	Continuity terminal
OFF (DRIVE)	1–3
ON (PARK)	2–4

- If any fault is found, replace the switch. (See Gr36A.)

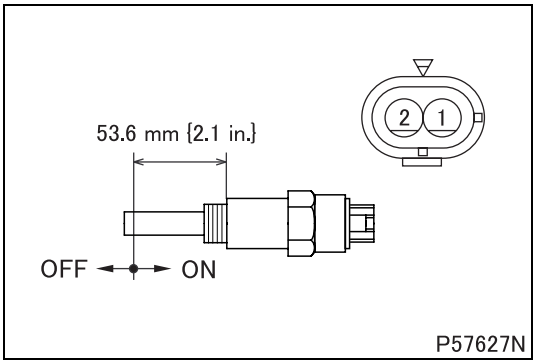

#040 Inspection of brake booster stroke switch

Switch position	Continuity terminal
OFF	–
ON	1–2

- If any fault is found, replace the switch. (See Gr35A.)

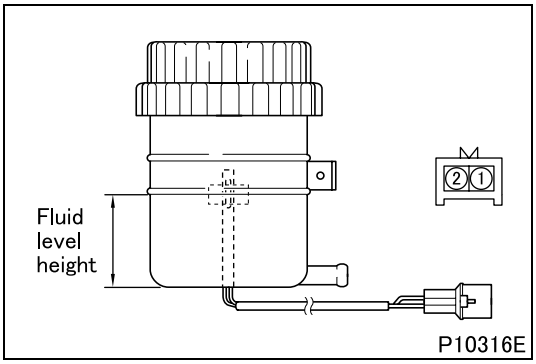

#041 Inspection of brake fluid level switch

- Gradually drain brake fluid from the brake fluid tank.

CAUTION ⚠

- **Brake fluid contains ingredients that dissolve paint on the bodywork of a vehicle. Quickly wipe off brake fluid when it is spilled.**

- Measure the fluid level when continuity is established between terminals 1 and 2.

Standard value	$57\ ^{+3.5}_{-0.5}$ mm {$2.24\ ^{+0.14}_{-0.02}$ in.} (equivalent to 345 cm^2 {21.1 cu.in., 0.345 L})

- If the measured value deviates from the standard value, replace the brake fluid tank. (See Gr35A.)

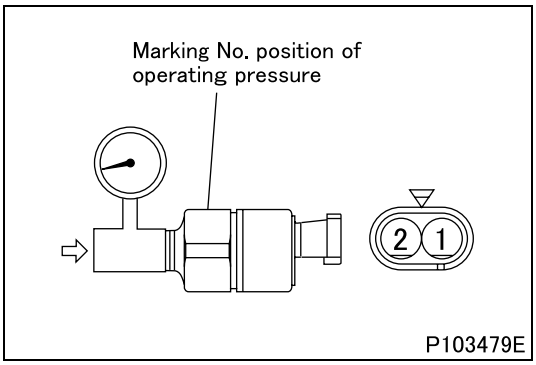

#042 Inspection of stop lamp switch

- Perform the following checks, and if any fault is found, replace the switch.

<In the case of marking No. 0.3 of operating pressure>

(1) Inspection without applying air pressure

- Check that there is no continuity between terminals 1 and 2.

(2) Inspection by applying air pressure

- Gradually apply air pressure to the switch starting from 0 kPa {0 psi, 0 kgf/cm^2}.
- Measure the degree of air pressure at the moment when continuity is detected between terminals 1 and 2, and make sure to confirm if the value meets the standard.

Standard value (operating pressure)	29 ± 9.8 kPa {4.3 ± 1.4 psi, 0.3 ± 0.1 kgf/cm^2}

<In the case of marking No. 5.0 of operating pressure>

(1) Inspection without applying air pressure

- Check that there is continuity between terminals 1 and 2.

(2) Inspection by applying air pressure

- Gradually apply air pressure to the switch starting from 0 kPa {0 psi, 0 kgf/cm^2}.
- Gradually decrease the pressure with air pressure applied.
- Measure the degree of air pressure at the moment when continuity is detected between terminals 1 and 2, and make sure to confirm if the value meets the standard.

Standard value (operating pressure)	490 ± 19.6 kPa {71 ± 2.8 psi, 5.0 ± 0.2 kgf/cm^2}

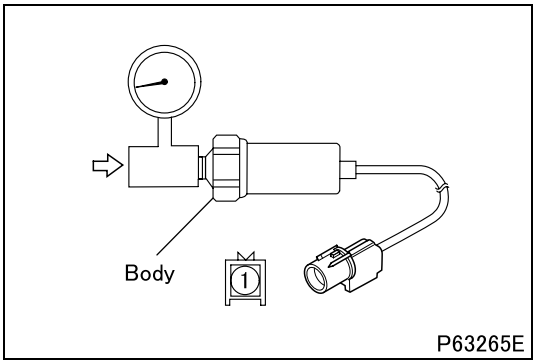

#044 Inspection of engine oil pressure switch

- Perform the following checks, and if any fault is found, replace the switch.

(1) Inspection without applying air pressure

- Check that there is continuity between terminal 1 and body.

(2) Inspection by applying air pressure

- Gradually apply air pressure to the switch starting from 0 kPa {0 psi, 0 kgf/cm^2}.
- Measure the degree of air pressure at the moment when continuity is detected between terminals 1 and body, and make sure to confirm if the value meets the standard.

Standard value (operating pressure)	49 ± 9.8 kPa {7.1 ± 1.4 psi, 0.5 ± 0.1 kgf/cm^2}

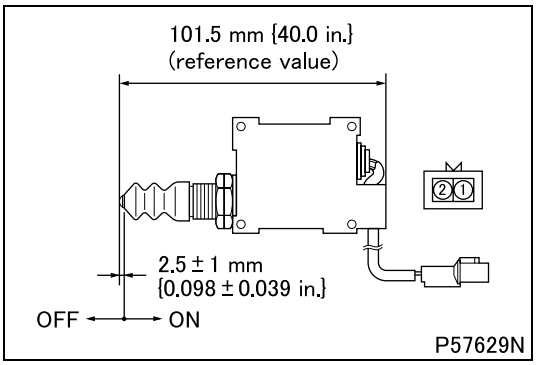

#045 Inspection of cab tilt lock switch

Switch position	Continuity terminal
OFF	–
ON	1–2

- If any fault is found, replace the switch. (See Gr42.)

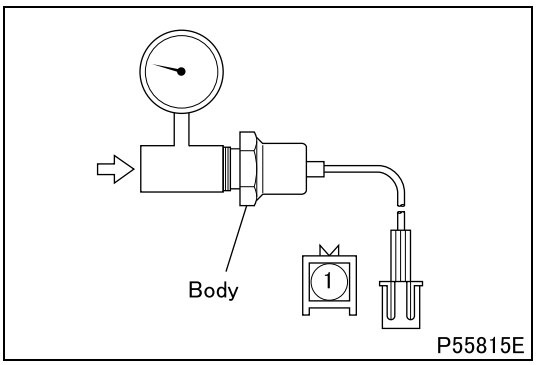

#053 Inspection of engine oil bypass alarm switch

- Perform the following checks, and if any fault is found, replace the switch. (See Gr12.)

(1) Inspection without applying air pressure

- Check that there is no continuity between terminal 1 and body.

(2) Inspection by applying air pressure

- Gradually apply air pressure to the switch starting from 0 kPa {0 kgf/cm^2}.
- Measure the degree of air pressure at the moment when continuity is detected between terminals 1 and body, and make sure to confirm if the value meets the standard.

Standard value (ON pressure)	185 $^{+49}_{0}$ kPa {27 $^{+7.1}_{0}$ psi, 1.9 $^{+0.5}_{0}$ kgf/cm^2}

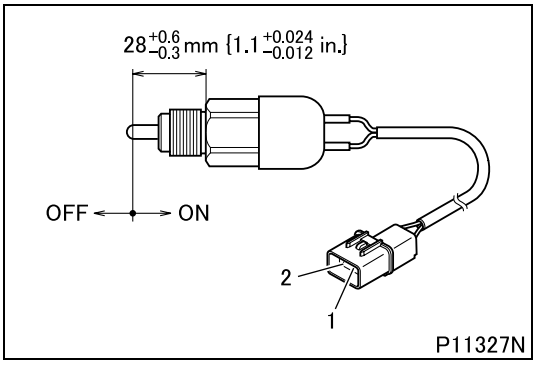

#054 Inspection of backup lamp switch

Switch position	Continuity terminal
OFF	–
ON	1–2

- If any fault is found, replace the switch. (See Gr22A.)

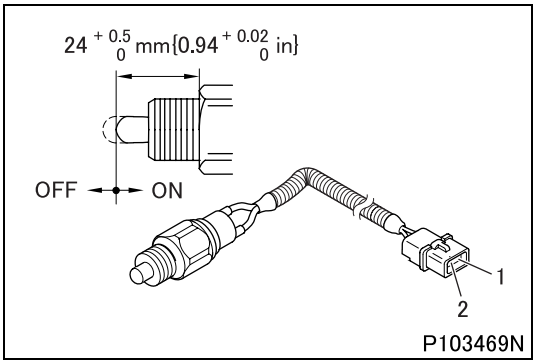

#056 Inspection of transmission neutral switch

Switch position	Continuity terminal
OFF	–
ON	1–2

- If any fault is found, replace the switch. (See Gr22A.)

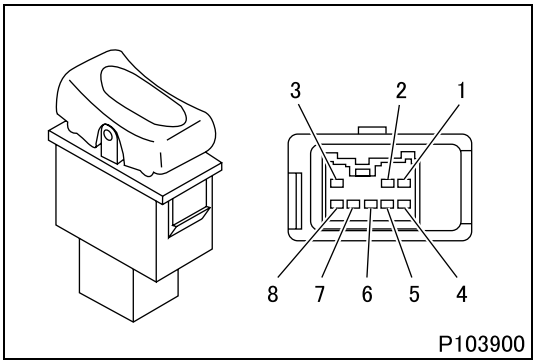

#063 Inspection of height control switch

Switch position	Continuity terminal	Indicator light
OFF	2–7	–
N (Neutral)	–	
DOWN	7–8	(+) 4–1 (–)

- If any fault is found, replace the switch.

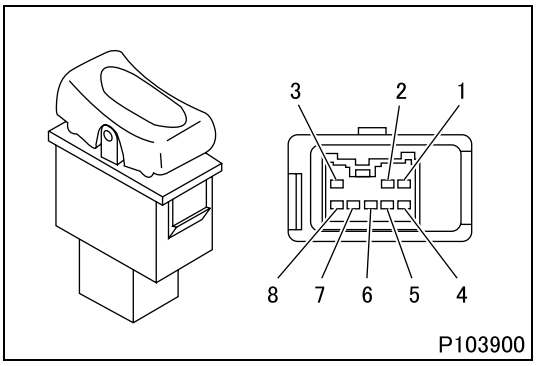

#087 Inspection of switch

- Perform the following checks, and if any fault is found, replace the switch.
- Van body dome light switch
- Power mode switch

Switch position	Continuity terminal	Indicator light
OFF	2–7	(+) 4–1 (–)
ON	7–8	

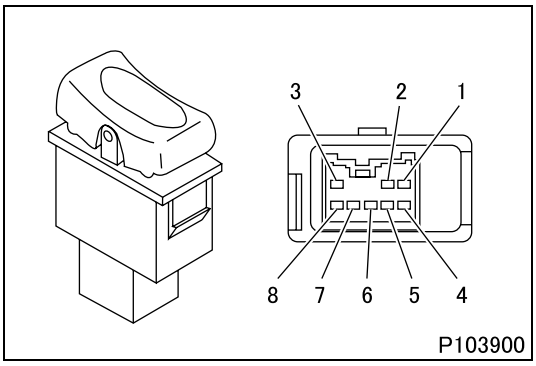

#092 Inspection of engine oil level check switch

Switch position	Continuity terminal
–	2–7
CHK	7–8

- If any fault is found, replace the switch.

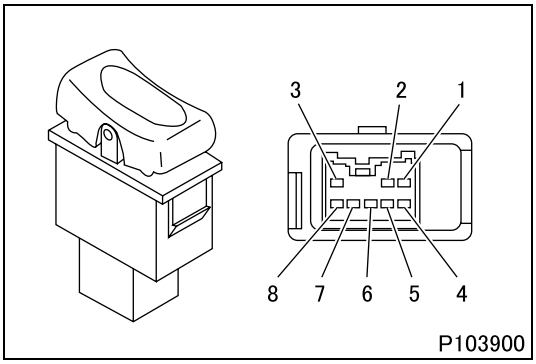

#094 Inspection of door lock switch

Switch position	Continuity terminal
LOCK	7–8
N (neutral)	–
UNLK	2–7

- If any fault is found, replace the switch.

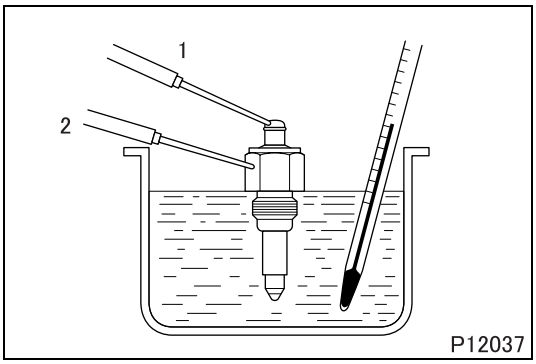

#160 Inspection of overheating switch

- Dip the switch in a container filled with engine oil.
- Raise the oil temperature to the specified values and stir the oil.
- Measure the operating temperature between terminals 1 and 2 (body) respectively.

Standard Value	When temperature increase (OFF→ON)	110 ± 2.5°C {230 ± 4.5°F}
	When temperature decrease (ON→OFF)	99.5 to 112.5°C {211 to 235°F}

- If the measured value deviates from the standard value, replace the switch. (See Gr14.)

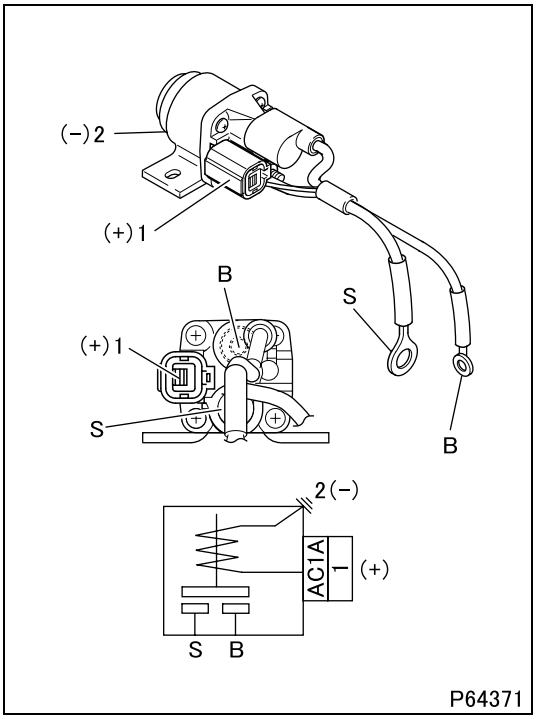

#187 Inspection of starter relay

- Perform continuity check and operation check, and if any fault is found, replace the relay.

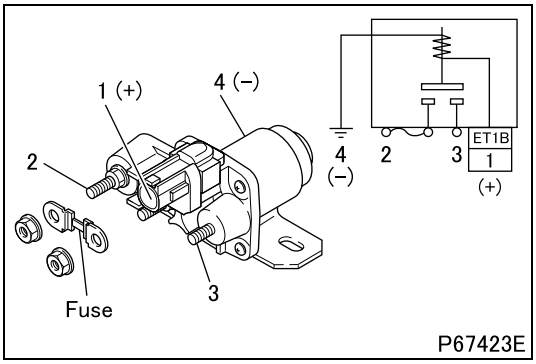

#195 Inspection of glow relay

- Perform continuity check and operation check, and if any fault is found, replace the relay.

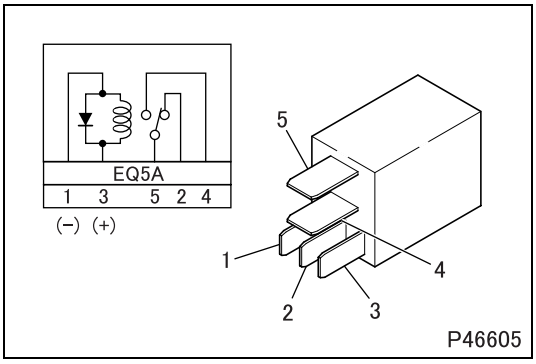

#201 Inspection of relay (normally-open type, 5-pin)

- Perform continuity check and operation check, and if any fault is found, replace the relay.

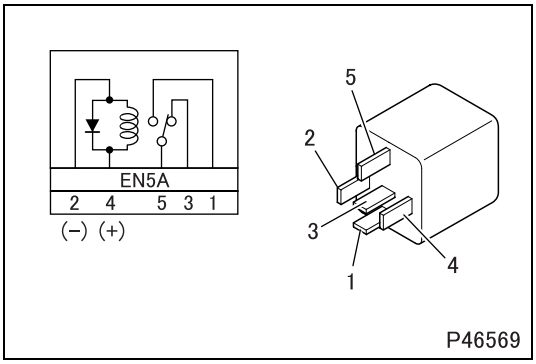

#202 Inspection of relay (normally-open type, 5-pin)

- Perform continuity check and operation check, and if any fault is found, replace the relay.

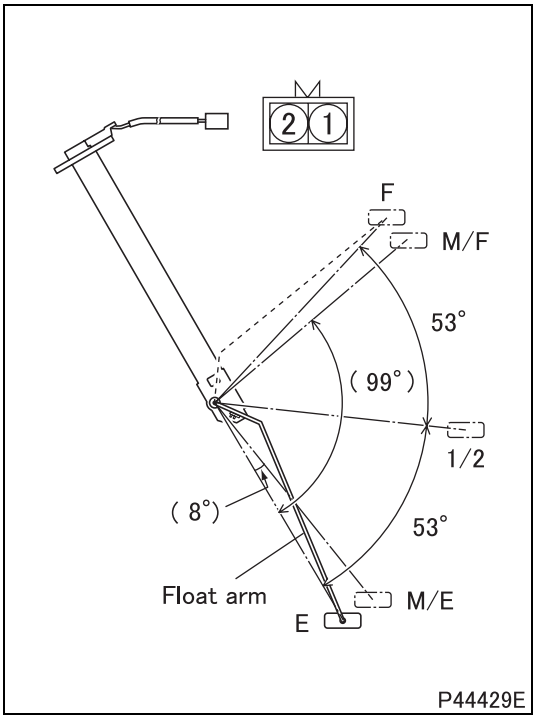

#258 Inspection of fuel level sensor

- Perform the following checks, and if any fault is found, replace the sensor. (See Gr13A.)
- Measure the resistance between terminals 1 and 2 with the float arm at FULL, MIDDLE FULL, 1/2, MIDDLE EMPTY and EMPTY positions.

Standard value	F (FULL)	0 Ω
	M/F (MIDDLE FULL)	4 Ω
	1/2	50 ± 3 Ω
	M/E (MIDDLE EMPTY)	135 Ω
	E (EMPTY)	150 ± 10 Ω

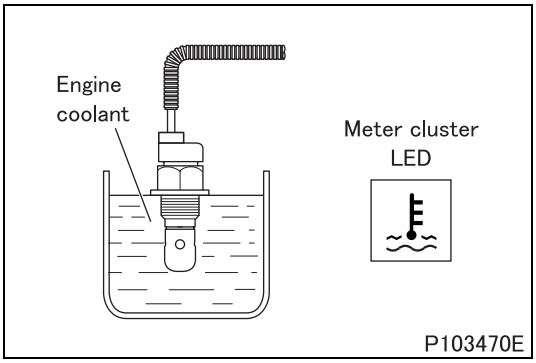

#259 Inspection of water level sensor

- Remove the water level sensor from the radiator.
- Turn the starter switch ON.
- Dip the water level sensor in a container filled with engine coolant, and check that the meter cluster warning lamp goes on and out under the following conditions.

Condition	Meter cluster LED
When water level sensor is out of the water	ON
When water level sensor is in the water	OFF

- If any fault is found, replace the sensor. (See Gr14.)

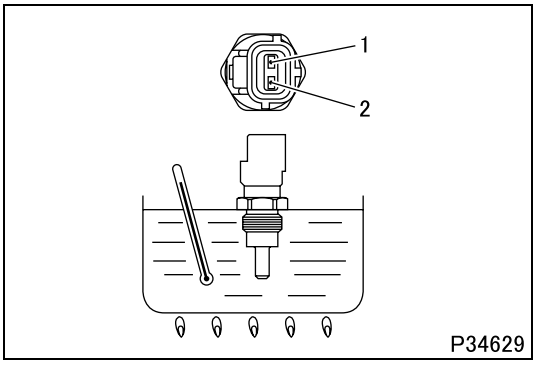

#262 Inspection of water temperature sensor

- Dip the sensor in a container filled with engine oil.
- Raise the oil temperature to the specified one while stirring the oil.
- Measure the resistance between terminals 1 and 2.

Standard value	20°C {68°F}	2.45 ± 0.14 kΩ
	80°C {176°F}	0.32 kΩ (reference)
	110°C {230°F}	147.1 ± 2 Ω

- If the measured value deviates from the standard value, replace the sensor. (See Gr14.)

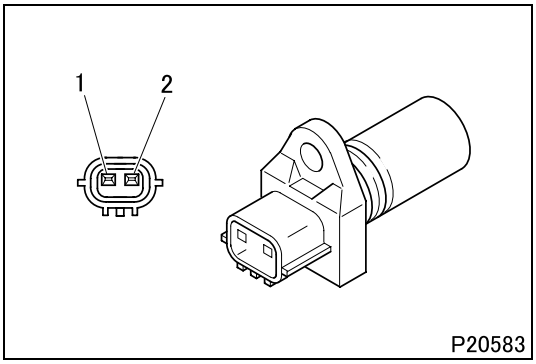

#263 Inspection of engine speed sensor

- Measure the resistance between terminals 1 and 2.

Standard value (at 20°C {68°F})	125.5 ± 17 Ω

- If the measured value deviates from the standard value, replace the sensor. (See Gr11.)

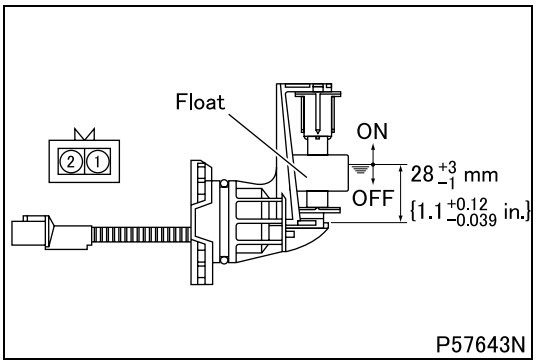

#264 Inspection of engine oil level sensor

Switch position	Continuity terminal
OFF	–
ON	1–2

- If any fault is found, replace the sensor. (See Gr12.)

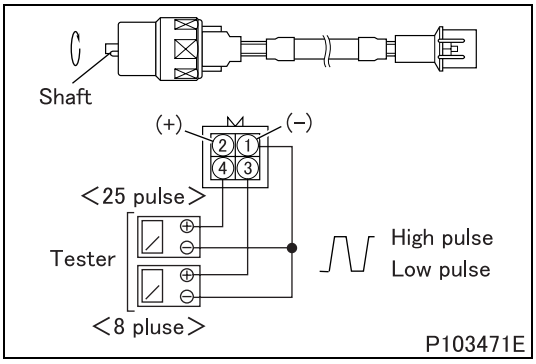

#265 Inspection of vehicle speed sensor

- Rotate the sensor shaft with the 12 Volts DC applied between terminals 1 and 2.
- Measure the maximum value (high pulse voltage) and the minimum value (low pulse voltage) of the voltage generated at each terminals.

Standard value	Between terminals 1 and 3 of 8-pulse output	Low pulse voltage	1.5 V or less
		High pulse voltage	11.5 V or more
	Between terminals 1 and 4 of 25-pulse output	Low pulse voltage	0.5 V or less
		High pulse voltage	8 ± 1 V

- If the measurement is not within the range of the standard value, replace the sensor. (See Gr22A, B and 23A, B.)

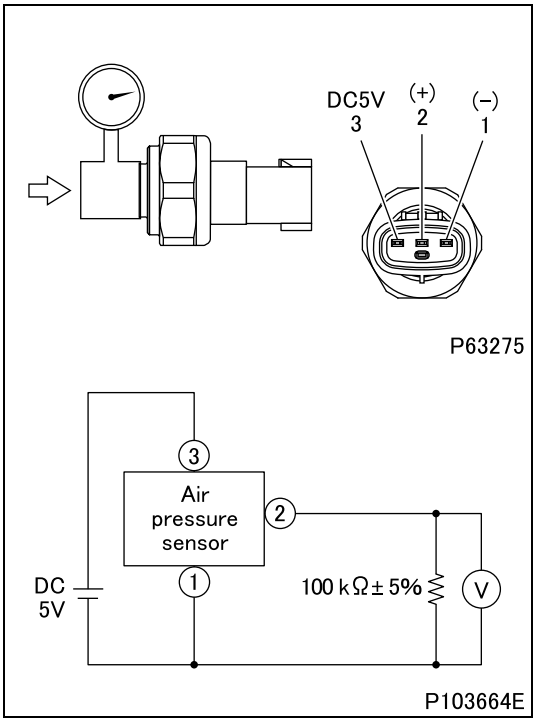

#269 Inspection of air pressure sensor

- Apply air pressure to the air pressure sensor with 5 Volts DC applied between the terminals 1 and 3.
- Measure voltage between the terminals 1 and 2 at each air pressure.

Standard value	0 MPa {0 psi, 0 kgf/cm^2}	0.5 V
	1.47 MPa {215 psi, 15 kgf/cm^2}	4.5 V

- If measured value deviated from the standard value, replace the sensor.

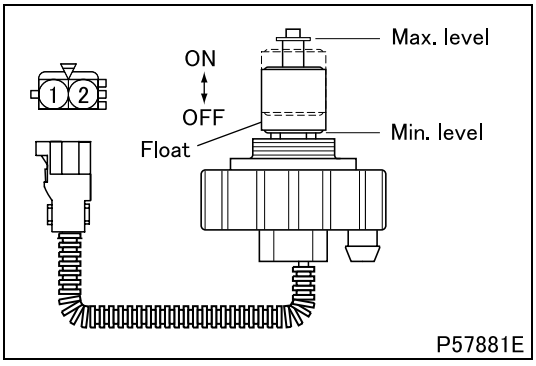

#274 Inspection of water separator sensor

Float position	Continuity terminal
ON (water quantity approx. 100 ml or higher)	1–2
OFF	–

- If any fault is found, replace the sensor. (See Gr13A.)

#350 Inspection of control unit and other units

- Since the units alone cannot be readily checked in the off-vehicle state, check the harness, switch and other related parts in each system.
- If any fault is not found in the related parts, and the problem still remains in the system, replace the control units or other units.

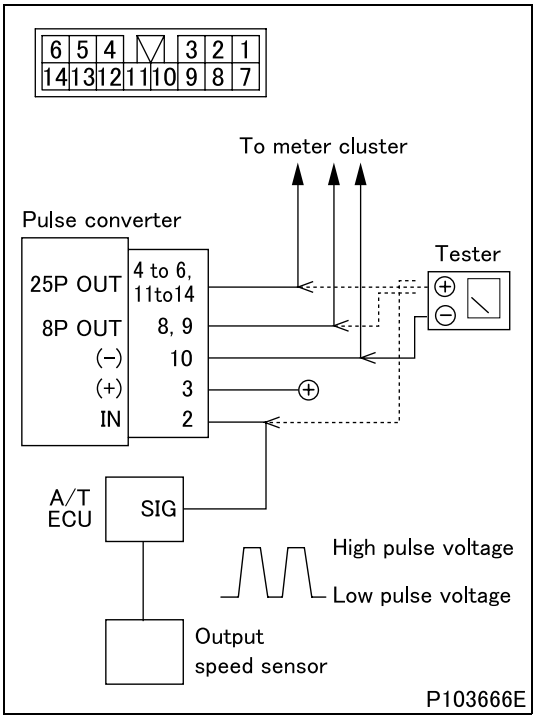

#352 Inspection of pulse converter

- Check the pulse converter and automatic transmission electronic control unit in the on-vehicle state.
- Slowly rotate the wheels using a chassis dynamo, etc. in the state of starter switch ON.
- Measure the maximum voltage (high pulse voltage) and the minimum voltage (low pulse voltage) in each of the output terminals of the pulse converter.

(1) Output measurement

Standard value	Between 8 pulse output terminals (8, 9) and 10	Low pulse voltage	1.5 V or less
		High pulse voltage	12 V or more
	Between 25 pulse output terminals (4 to 6, 11 to 14) and 10	Low pulse voltage	0.5 V or less
		High pulse voltage	$8^{+1.5}_{-1.0}$ V

- If the measurement deviates from the standard value, replace the pulse converter.

(2) Input measurement

Standard value Between 25 pulse input terminal 2 and 10	Low pulse voltage	0.5 V or less
	High pulse voltage	8 ± 1 V

- If the measurement complies with the standard value, replace the pulse converter as the signal from the automatic transmission electronic control unit is judged to be normal.
- If the measurement deviates from the standard value, check the automatic transmission. (See Gr23A, B.)

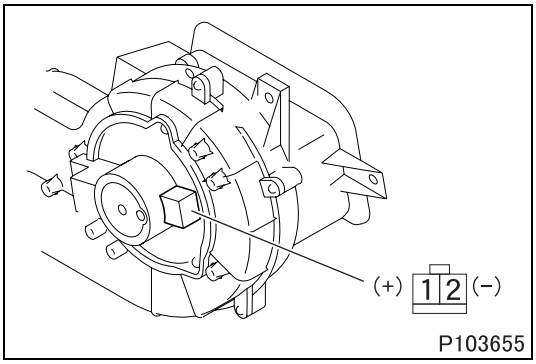

#411 Inspection of blower motor

- Make sure that the motor operates when battery voltage is applied between terminals 1 and 2.
- If any fault is found, replace the motor. (See Gr55.)

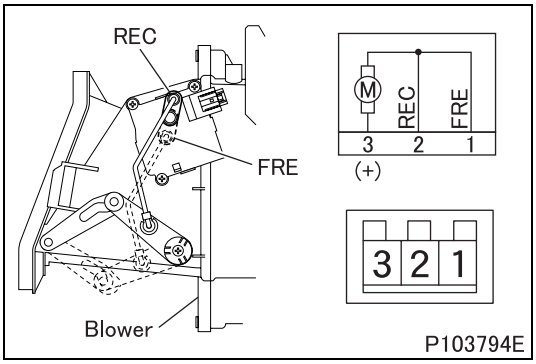

#415 Inspection of fresh/recirculation changeover motor

- Perform the following checks, and if any fault is found, replace the motor. (See Gr55.)
- Make sure that the motor operates when DC12V is applied between each terminal.

Lever position	Terminal
REC (inside air)	(+) 3–2 (–)
FRE (outside air)	(+) 3–1 (–)

CAUTION ⚠

- **Stop applying DC12V if the lever stops spontaneously at the REC or FRE position.**

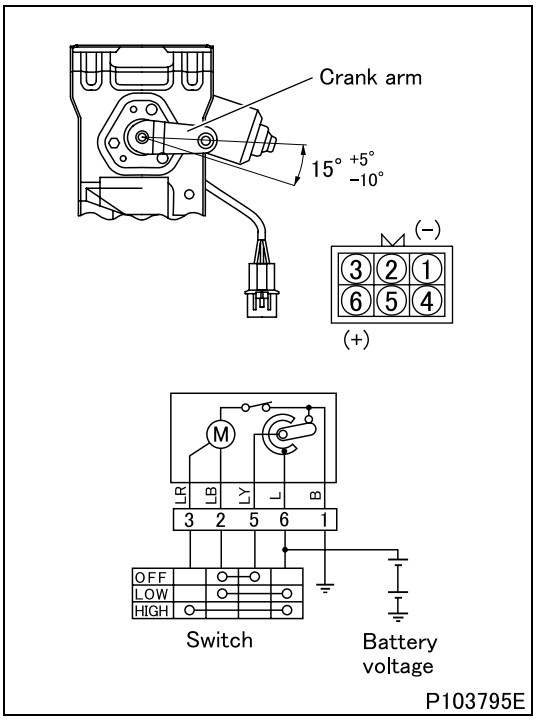

#422 Inspection of wiper motor

- Connect a switch to wiper motor as shown.
- Check the motor for correct operation as follows. If any fault is found, replace the motor. (See Gr51.)

(1) Inspection of motor operation

- Set switch to HIGH position to check that the motor rotates at high speed.
- Set switch to LOW position to check that the motor rotates at low speed.

(2) Inspection of automatic stop position

- Set switch to LOW position to let the motor rotate at low speed.
- When the crank arm is in a position other than automatic stop position (outside the angles shown), set switch to OFF position.
- Check to see that the crank arm stops at the automatic stop position (within the angles range shown).

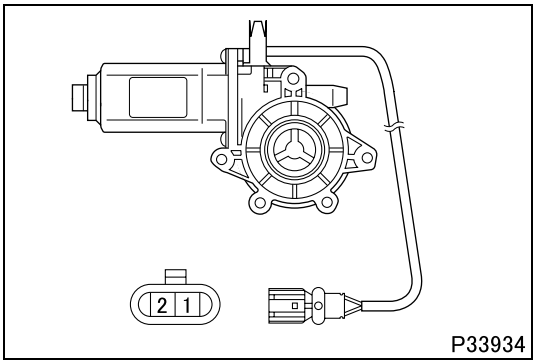

#423 Inspection of power window motor

- Make sure that the motor operates when battery voltage is applied between terminals 1 and 2.

Turning direction	Terminal
Left	(+) 1–2 (–)
Right	(+) 2–1 (–)

- If any fault is found, replace the motor. (See Gr43.)

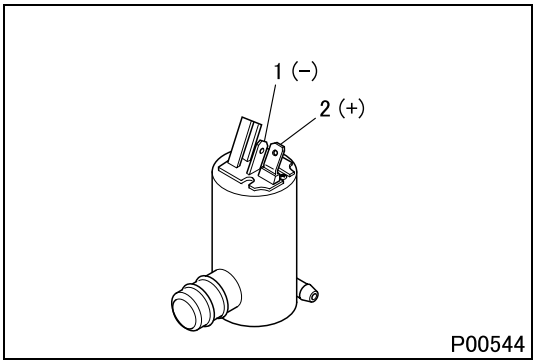

#428 Inspection of windshield washer motor

- Make sure that the motor operates when battery voltage is applied between each terminals.
- If any fault is found, replace the motor. (See Gr51.)

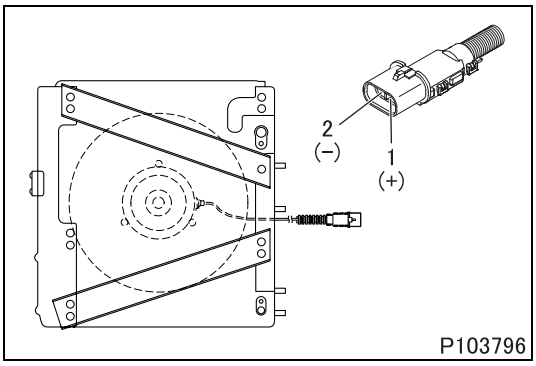

#431 Inspection of condenser fan motor

- Make sure that the motor operates when battery voltage is applied between terminals 1 and 2.
- If any fault is found, replace the condenser. (See Gr55.)

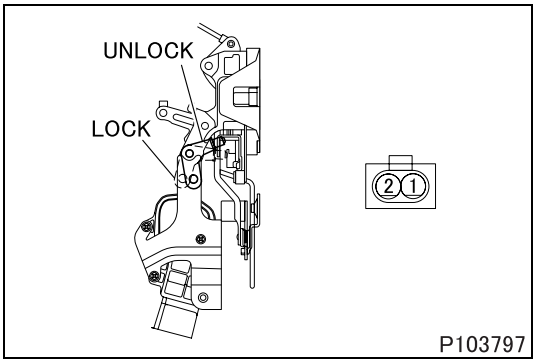

#510 Inspection of door lock actuator (on assistant driver's seat side)

- Apply battery voltage between terminals 1 and 2 and confirm that the actuator operates.

Switch position	Terminal
LOCK	(+) 2–1 (–)
UNLOCK	(+) 1–2 (–)

- If any fault is found, replace the actuator. (See Gr43.)

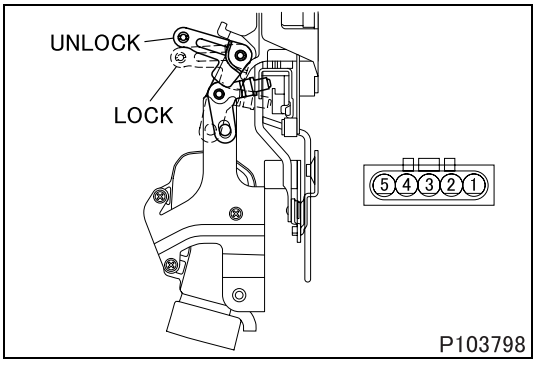

#511 Inspection of door lock actuator (on driver's seat side)

- Apply battery voltage between terminals 4 and 5 and confirm that the actuator operates.

Switch position	Terminal	Continuity terminal
LOCK	(+) 3–2 (–)	1–5
UNLOCK	(+) 2–3 (–)	4–5

- If any fault is found, replace the actuator. (See Gr43.)

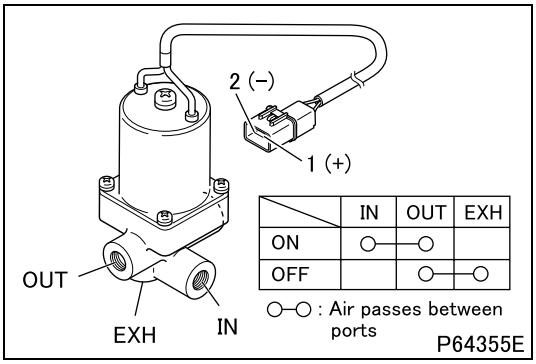

#565 Inspection of 3-way magnetic valve

<Type-1>

- Perform the following checks, and if any fault is found, replace the 3-way magnetic valve.

(1) Operation check

- Gradually apply DC current between terminals 1 and 2 starting from 0 V.

Measure the voltage at which the 3-way magnetic valve operates. (Determine ON/OFF of the magnetic valve by operating noises.)

Standard value (minimum operating voltage)	10 V or lower

(2) Inspection of continuity and air tightness

- Air pressure when inspected: 981 kPa {140 psi, 10 kgf/cm^2}

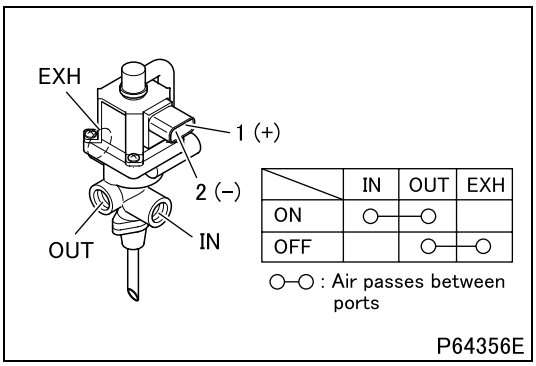

<Type-2>

- Perform the following checks, and if any fault is found, replace the 3-way magnetic valve.

(1) Operation check

- Gradually apply DC current between terminals 1 and 2 starting from 0 V.

Measure the voltage at which the 3-way magnetic valve operates. (Determine ON/OFF of the magnetic valve by operating noises.)

Standard value (minimum operating voltage)	10 V or lower

(2) Inspection of continuity and air tightness

- Air pressure when inspected: 981 kPa {140 psi, 10 kgf/cm^2}

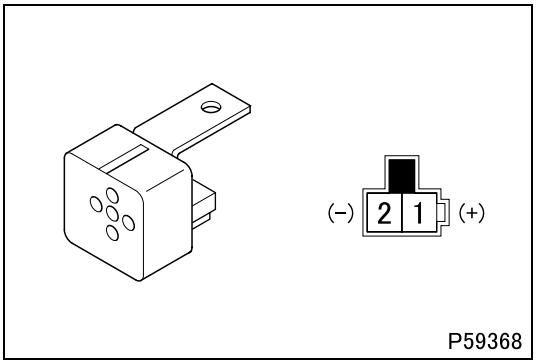

#611 Inspection of warning buzzer

- Make sure that the buzzer sounds when battery voltage is applied between terminals 1 and 2.
- If any fault is found, replace the buzzer.

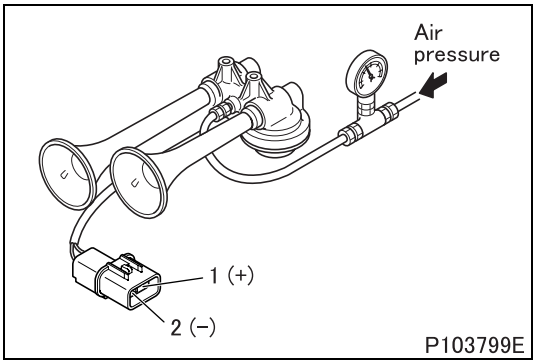

#612 Inspection of air horn

- Perform the following check. If any fault is found, replace the horn.

(1) Minimum operating voltage of air horn valve

- Apply air pressure of 785 kPa {115 psi, 8 kgf/cm^2} to the horn.
- Gradually apply DC voltage between terminals 1 and 2 starting from 0 V.
- Measure the voltage when the horn sounds.

Standard value	20 V or lower

(2) Operating air pressure of horn

- Apply DC voltage between terminals 1 and 2.
- Gradually apply air pressure to the horn starting from 0 kPa {0 psi, 0 kgf/cm^2}.
- Measure the air pressure when the horn sounds.

Standard value	195 to 980 kPa {28 to 142 psi, 2 to 10 kgf/cm^2}

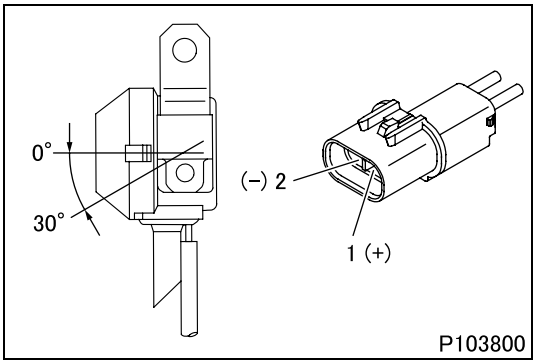

#614 Inspection of back buzzer

[Inspection]

- Make sure to confirm if the buzzer intermittently sounds by applying the battery voltage between terminals 1 and 2.
- If any fault is found, replace the buzzer.

[Installation]

- Install the back buzzer to the frame in the range of angles as illustrated.

CAUTION ⚠

- **Beware that if the installed angle of the buzzer is out of the range as illustrated, water in the buzzer will not be drained normally.**

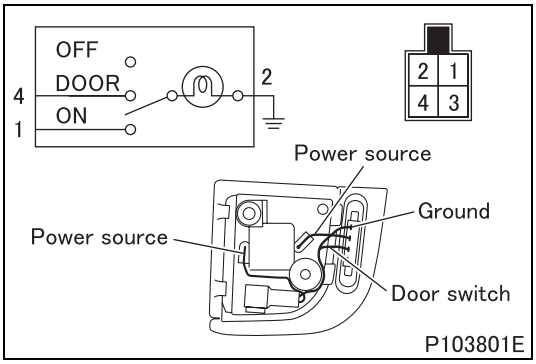

#652 Inspection of personal lamp

- If any fault is found, replace the lamp.
- Shown in the illustration is the back side of the driver's seat side lamp.
  The assistant driver's seat side lamp is symmetrical to driver's seat side lamp.

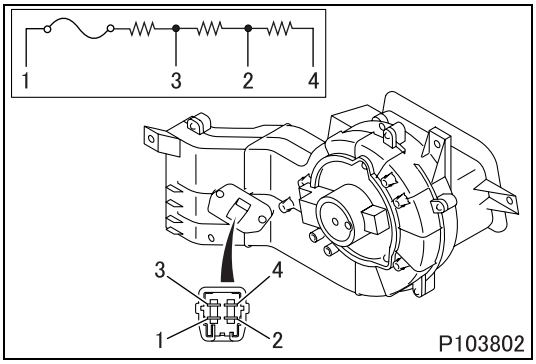

#750 Inspection of blower resistor

- Measure resistance values between each terminals.

Fan speed	Terminal	Standard value
LOW	1–4	Approx. 1.89 Ω
MEDIUM LOW	1–2	Approx. 0.89 Ω
MEDIUM HIGH	1–3	Approx. 0.33 Ω

- If the measured value deviates from the standard value, replace the blower resistor. (See Gr55.)

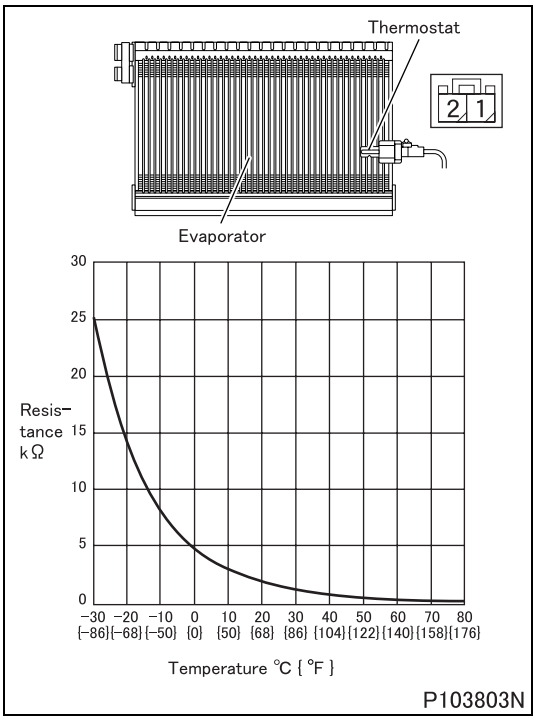

#751 Inspection of thermostat

- Change surrounding temperatures of the thermostat and measure resistance between the terminals 1 and 2.
- If measured value deviates from the temperature characteristic curve shown at the left, replace the thermostat.
  (Standard resistance: 4.852 kΩ at 0°C) (See Gr55.)

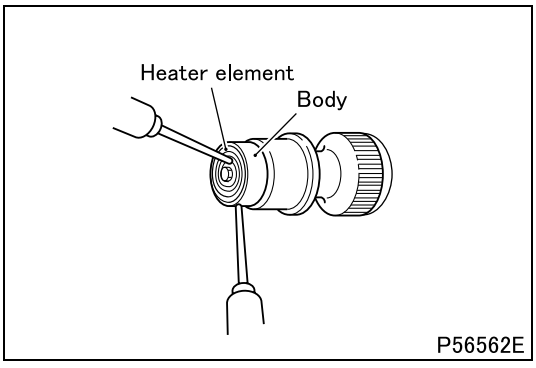

#754 Inspection of cigarette lighter

- Perform the following checks, and if any fault is found, replace the cigarette lighter.
- Make sure that there is continuity between heater element and body.

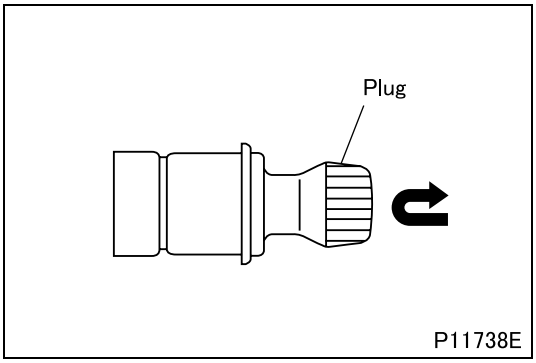

- Make sure that when plug is pushed in by hand, it immediately returns to its original position.
- Place the starter switch at ACC or ON position.
- Push plug into the socket in the cab.
- Measure the time required for plug to automatically return.

Standard value	15 ± 5 seconds

- Check to see that heater element is red-hot.

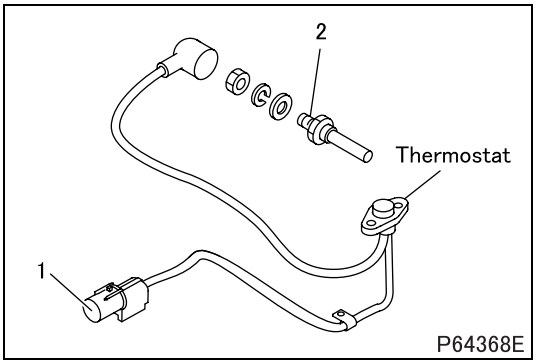

#758 Inspection of air dryer

(1) Inspection of thermostat

- Perform the following check. If any fault is found, replace the thermostat. (See Gr35A, B.)
- While varying the temperature around the thermostat, measure the temperatures when the continuity is established and is lost between terminals 1 and 2.

Standard value	Lowering the temperature	Temperature when continuity is established (ON temperature)	4 ± 4°C {39 ± 39°F}
	Raising the temperature	Temperature when continuity is lost (OFF temperature)	20°C {68°F} or lower

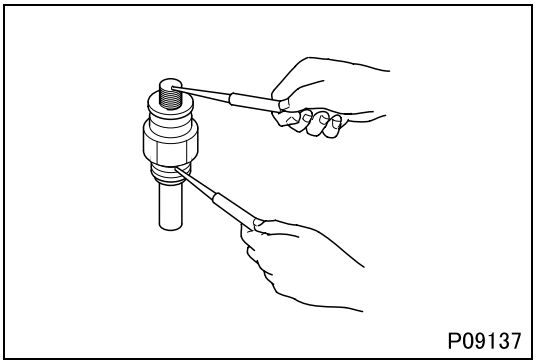

(2) Inspection of heater

- Measure the resistance of heater as shown.

Standard value	8.2 Ω or less

- If the measured value is out of the standard value, replace the heater. (See Gr35A, B.)

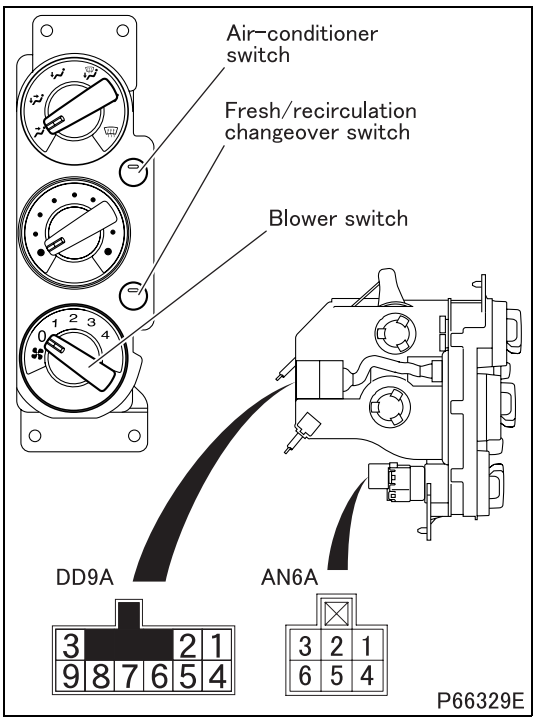

#763 Inspection of heater control panel

- Perform the following checks, and if any fault is found, replace the heater control panel. (See Gr55.)

(1) Blower switch <AN6A connector>

Switch position	Continuity terminal
0: OFF	–
1: LO (LOW)	4–5–6
2: ML (MEDIUM LOW)	1–5–6
3: MH (MEDIUM HIGH)	2–5–6
4: HI (HIGH)	3–5–6

(2) Fresh/recirculation changeover switch <DD9A connector>

Switch position	Continuity terminal	Operation illumination	Night illumination
OFF: Fresh air	3–7	–	(+) 9–4 (–)
ON: Recirculation air	3–8	(+) 6–3 (–)	

(3) Air-conditioner switch <DD9A connector>

Switch position	Continuity terminal	Operation illumination	Night illumination
OFF	–	–	(+) 9–4 (–)
ON	1–2–5	(+) 5–2 (–)	

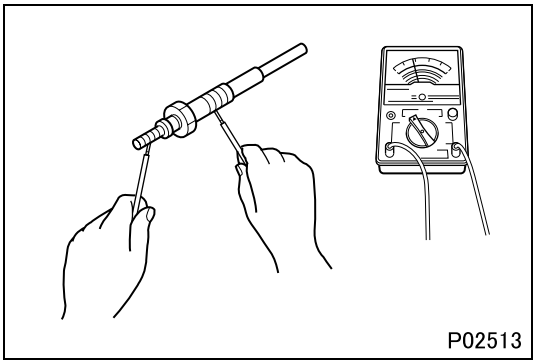

#764 Inspection of glow plug

- Measure resistance value of glow plug as shown.

Standard value (cold resistance of glow plug)	Approx. 1.1 Ω

- If the measured value deviates from the standard value, replace the glow plug. (See Gr11.)

DANGER ⚠

- **Since flammable hydrogen gas is generated by the battery be sure to obey the following warnings:**
  - **Do not short-circuit the (+) and (–) terminals on the battery.**
  - **Keep sparks and lit cigarettes away from the battery.**
  - **Do not wear metal objects on your arms and lean over battery.**
- **Because the battery electrolyte is made of diluted sulfuric acid and is corrosive, when handling battery wear safety glasses and rubber gloves to protect the eyes and hands.**

WARNING ⚠

- **Make sure that you disconnect battery cable (–) first when you disconnect battery cables.**

CAUTION ⚠

- **Make sure that all electrical switches of the vehicle are OFF before connecting battery cables.**
- **Make sure that you connect battery cable (+) before you connect battery cable (–).**
- **To prevent a short-circuit be sure that disconnected battery cables do not accidentally touch the battery terminals.**

Service standards

Location	Maintenance item	Standard value	Limit	Remedy
–	Specific gravity of battery electrolyte (20°C {68°F})	1.280	1.220	Charge or replace

◆Service procedure◆

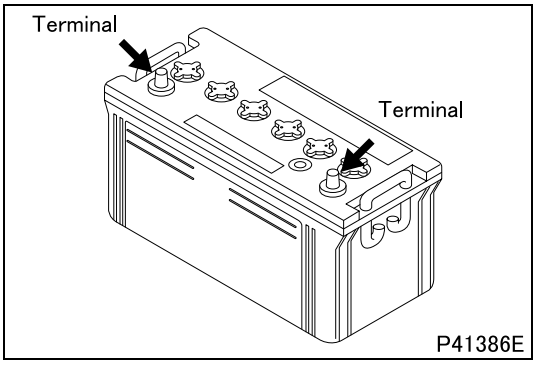

Inspection of battery

(1) Visual inspection

- If terminal is corroded, scrub off the corrosion from it using a wire brush.
- If cracks or defects are found on battery, replace it since the cracks or defects can cause liquid spills.

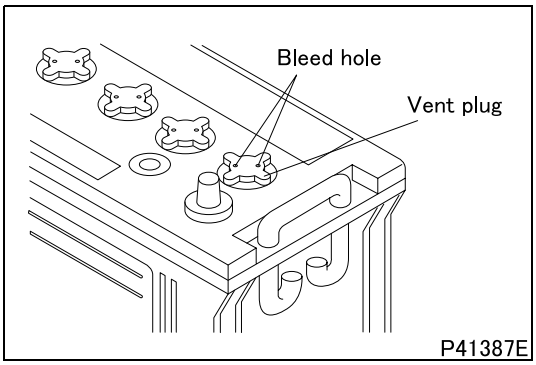

- If bleed hole of vent plug is clogged, clean the hole.

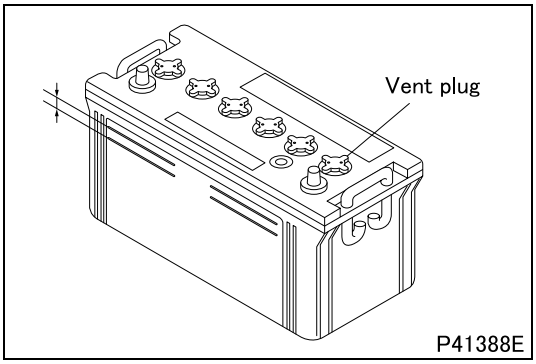

(2) Inspection of fluid level

- Make sure that the battery electrolyte level is between UPPER and LOWER.
- If the level is below LOWER, remove vent plug and fill the battery with distilled water or battery replenisher to UPPER.

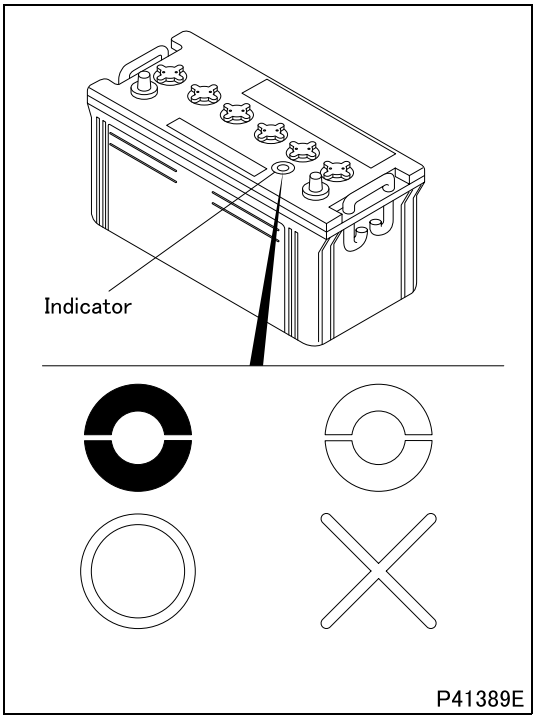

(3) Measurement of specific gravity

You can tell the specific gravity of the battery electrolyte by the color shown in indicator.

Blue : Good
White : Charge or replace

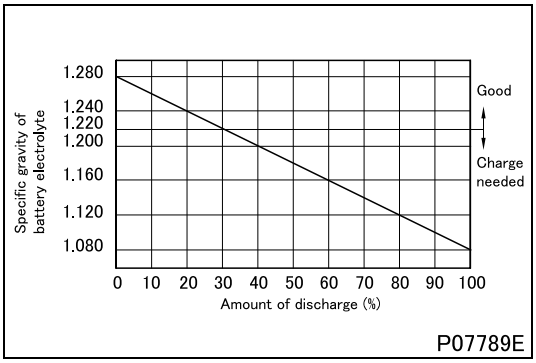

(4) Charging

- Although, as a rule, battery charging should be done with the battery removed from the vehicle, if you have to charge the battery while it is on the vehicle, make sure that you stop the engine and disconnect battery cable (–).
- Remove vent plug before charging the battery.
- For the recommended charge time and current, see the following table to avoid overcharging.

	Charge current (A)	Charge time (H)	Upper limit of fluid temperature (°C {°F})
Normal charge	Value of 5-hour rating capacity / 10	*Amount of discharge (Ah) / Charge current (A) × 1.2 (to 1.5)	45 {113}
Quick charge	Value of 5-hour rating capacity / 1.5	0.5	55 {131}

* Amount of discharge (Ah) =

$$\text{5-hour rating capacity (Ah)} \times \frac{\text{Amount of discharge (\%)}}{100}$$

- Use the graph shown on the left to calculate the amount of discharge (%).
- Use diluted sulfuric acid, made up of sulfuric acid and refined or distilled water, as the battery electrolyte.

DANGER ⚠

- **Keep naked light away from the battery while charging to prevent explosion.**
- **It is dangerous to generate sparks while charging the battery.**
- **Do not charge battery if the electrolyte level is below LOWER LEVEL, since it can cause early deterioration, heating, or explosion. Make sure to add the fluid to the specified level before charging.**

WARNING ⚠

- **Do not let the battery electrolyte level rise and overflow while charging the battery.**
- **After charging the battery, tighten vent plug, wash away sulfuric acid from the battery using water, and dry the surface.**

#890 METER

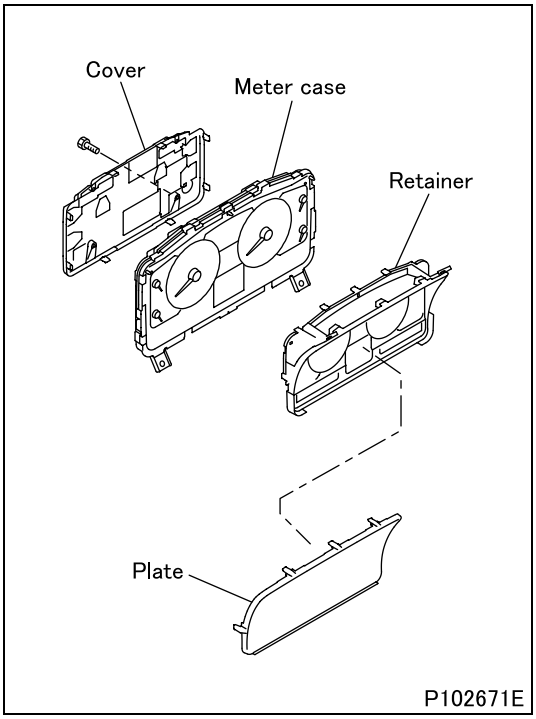

#890 Meter cluster

- Each sensor signal is converted into digital signal in the meter cluster and then the value is indicated by the corresponding meter on the cluster. Therefore, a signal meter inspection cannot be performed.
  Each meter should be checked indirectly by checking its related harnesses and parts.
- If the related harnesses and parts are normal but the meter indication is faulty, replace the meter cluster.

54-12 STARTER AND ALTERNATOR

#930 STARTER

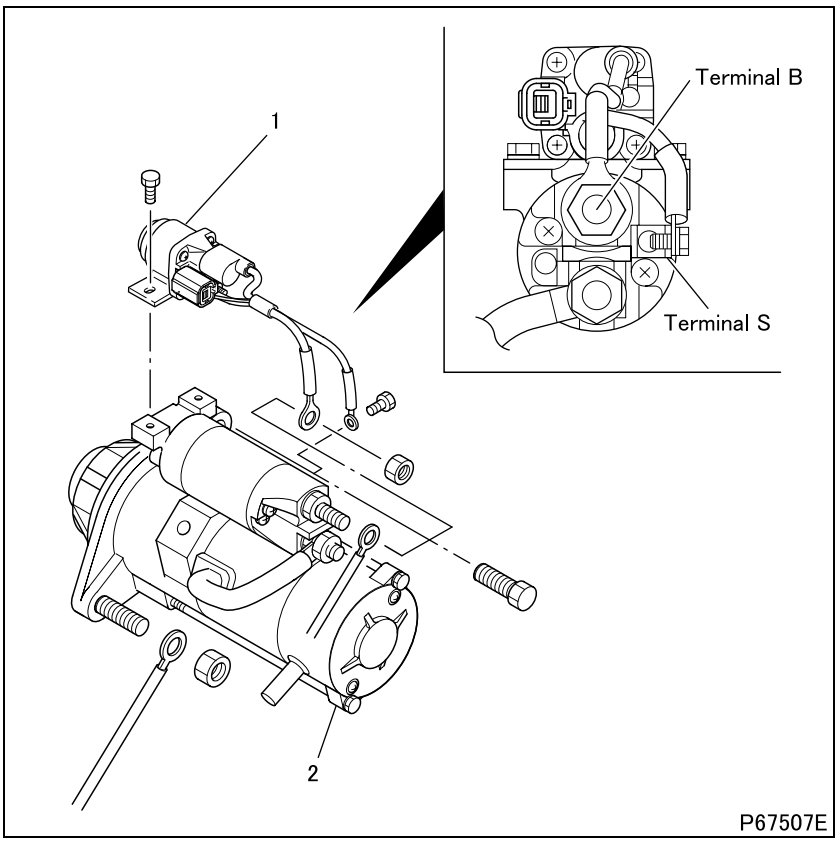

● **Removal sequence**

1 Starter relay
2 Starter

WARNING ⚠

- **Before removing the starter, disconnect the (–) battery cable and insulate the cable and the (–) battery terminal with tape.**
- **It is dangerous to leave the (–) battery cable connected since the battery voltage is always present at terminal B.**

● **Installation sequence**

Follow the removal sequence in reverse.

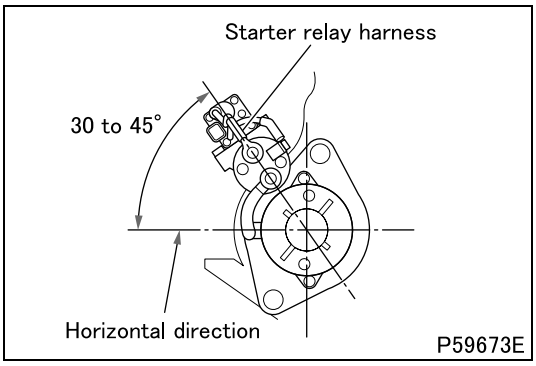

- To prevent the interference with the air intake hose, route the starter relay harness within the range shown in the drawing.

M E M O

#930 STARTER

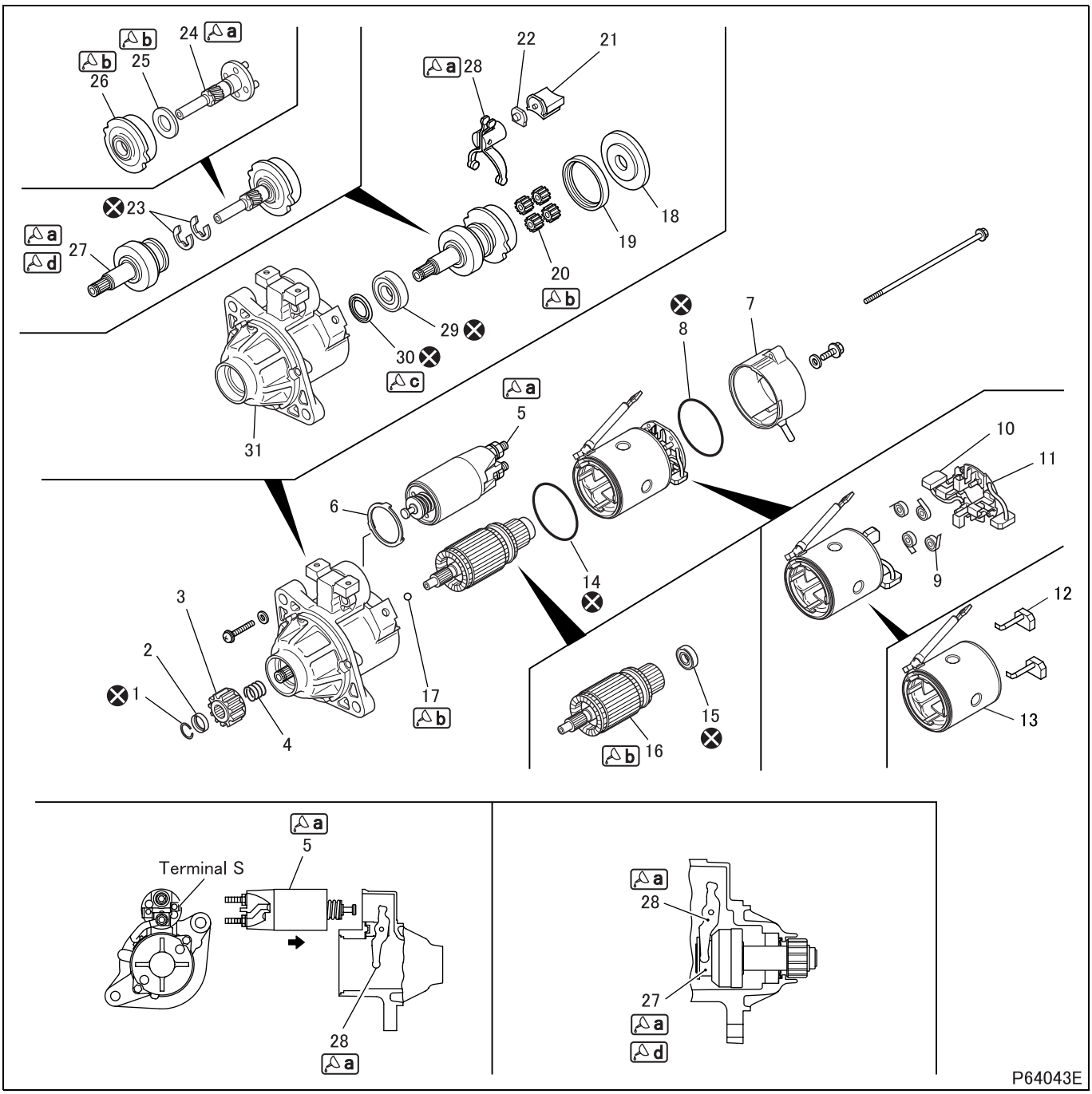

● **Disassembly sequence**

1 Stopper ring
2 Pinion stopper
3 Pinion
4 Spring
5 Magnetic switch
6 Shim
7 Rear bracket
8 Packing
9 Brush spring
10 Brush (–)
11 Brush holder
12 Brush (+)
13 Yoke
14 Packing
15 Rear bearing
16 Armature
17 Ball
18 Cover
19 Rubber packing
20 Planetary gear
21 Rubber packing
22 Plate
23 E-ring
24 Gear shaft
25 Washer
26 Internal gear
27 Overrunning clutch
28 Lever
29 Front bearing
30 Oil seal
31 Front bracket

⊗: Non-reusable parts

CAUTION ⚠

- **When the armature is removed, the ball may come out with it. Take care not to lose the ball.**

- Do not remove the rear bearing unless defects are evident.
- It is not necessary to remove the pinion when only the motor section needs to be disassembled for inspection, like when inspecting brushes and related parts.
- Be sure to remove the pinion before disassembling any other parts.

● Assembly sequence

Follow the disassembly sequence in reverse.

- Whenever the magnetic switch is replaced, the pinion gap must be adjusted.
- The rubber packing is serviceable if any defect is not found.

Service standards (Unit: mm {in.})

Location	Maintenance item			Standard value	Limit	Remedy
–	Pinion gap			0.5 to 2.0 {0.02 to 0.079}	–	Adjust
–	No-load characteristics	With 11 V applied	Current	230 A or less	–	Correct or replace
			Rotation speed	3400 rpm or higher	–	
9	Brush spring pressure			33 to 45 N {7.5 to 10 lbs, 3.4 to 4.6 kgf}	17.7 N {4 lbs, 1.8 kgf}	Replace
10, 12	Brush length			18 {0.71}	11 {0.43}	Replace
17	Commutator outside diameter			38.7 {1.52}	38.1 {1.50}	Replace
	Runout of commutator periphery			–	0.1 {0.0039} or higher	
	Mold depth between segments			0.5 to 0.8	0.2 {0.0079} or less	Correct or replace

Lubricant and/or sealant

Mark	Points of application	Specified lubricant and/or sealant	Quantity
a	Lever contact surface of magnetic switch	Multipurpose grease [NLGI No. 2 (Li soap)]	As required
	Sliding surfaces of gear shaft and overrunning clutch		
	Sliding surfaces of lever and overrunning clutch		
b	Sliding surfaces of armature and gear shaft	Molykote AG650	As required
	Ball		
	Teeth of planetary gear and internal gear		
	Washer		
c	Oil seal	Multipurpose grease [NLGI No.2 (Li soap)] or grease attached to oil seal	As required
d	Splines of overrunning clutch	Multemp OA-171 (Kyodo Yushi Co., Ltd.)	As required

Special tools

Mark	Tool name and shape	Part No.	Application
ⓒa	Bearing remover and installer A: Bearing remover and installer B: Bearing installer 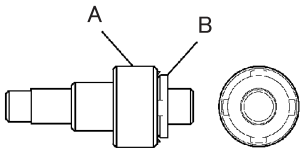 P50804	MH063597 A: MH063615 B: MH063619	Removal and installation of front bearing

◆Work before disassembly◆

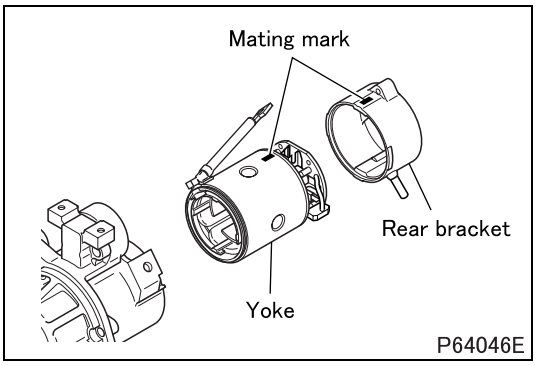

P64046E

■ **Mating mark: Rear bracket and yoke**

◆Disassembly procedure◆

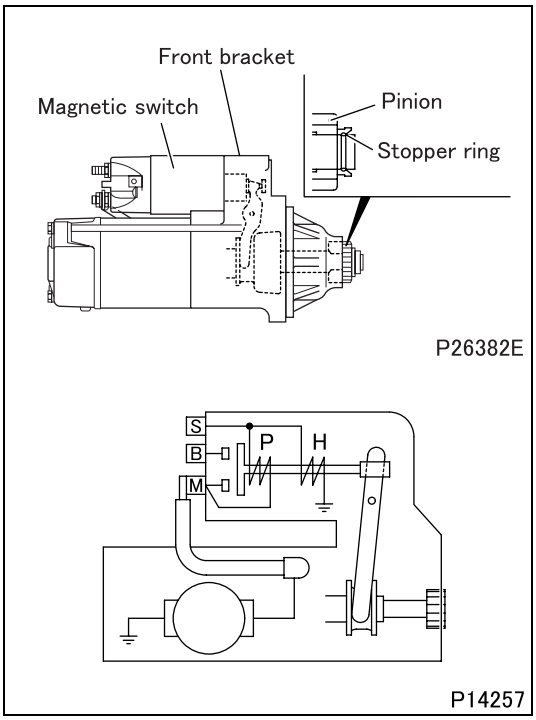

P26382E

P14257

■ **Disassembly: Pinion**

- For removal of the pinion, current must be supplied to the starter such that the pinion springs out.

WARNING ⚠

- **When the starter is energized, the pinion will spring out and rotate. Be careful not to touch it with your hands.**
- **The magnetic switch may become very hot during inspections. Be careful when touching it.**

CAUTION ⚠

- **Do not energize the pull-in coil P for longer than 10 seconds, and do not energize the holding coil H for longer than 30 seconds. If these periods are exceeded, the coils may overheat and burn out.**
- **To make the pinion spring out, be sure to energize the starter such that its parts are positioned correctly. If the starter is not energized and the lever is pulled to make the pinion come out, the front bracket and/or lever may be damaged by the shock inflicted upon them when the stopper ring is removed.**
- **When current is supplied to the starter, a large current (100 A or higher) will flow. For inspection purposes, use booster cables or similarly thick cables. It is also important to ensure that all connections are secure.**

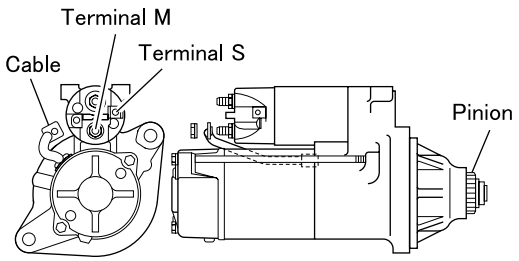

P26380E

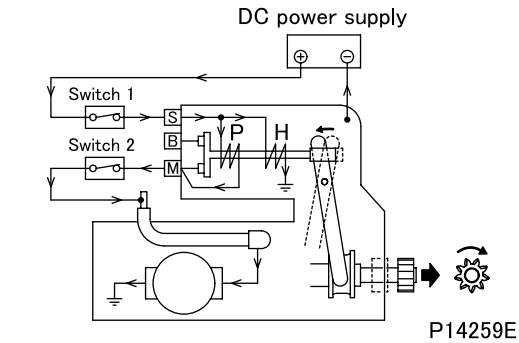

P14259E

- Connect the starter as illustrated.
- The following operations are performed with current supplied to the starter. Thus, the entire procedure for removal of the pinion must be completed within 30 seconds.
  - Turn ON switches 1 and 2 to supply current to the starter. The pinion will spring out and rotate.

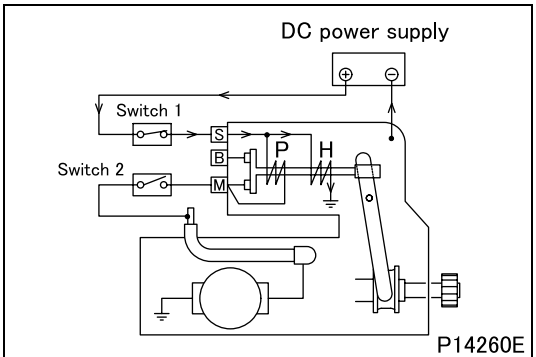

P14260E

- After the pinion starts to rotate, quickly (within five seconds) turn OFF switch 2 to stop the pinion's rotation.

CAUTION ⚠

- **When switches 1 and 2 are turned ON, the pull-in coil P and holding coil H are both energized. The circuit is connected such that no voltage is applied to starter terminal B, so current flows to the pull-in coil while the pinion rotates. To prevent the pull-in coil from burning out, it is essential to turn OFF switch 2 quickly (within five seconds) after the pinion starts to rotate.**

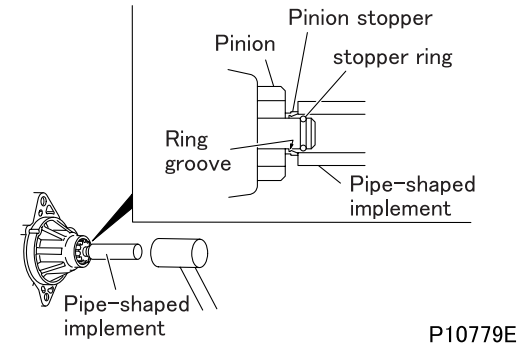

P10779E

- Apply a pipe-shaped implement to the pinion stopper.
- Using a hammer, lightly tap the pipe-shaped implement to remove the stopper ring from the ring groove of the pinion stopper.
- Remove the stopper ring and pinion.
- Turn OFF switch 1 to de-energize the starter.

CAUTION ⚠

- **When the starter is de-energized, the mechanism will attempt to pull in the pinion. Thus, the stopper ring may slip back into the ring groove of the pinion stopper. If this happens, energize the starter and go through the pinion removal procedure again.**

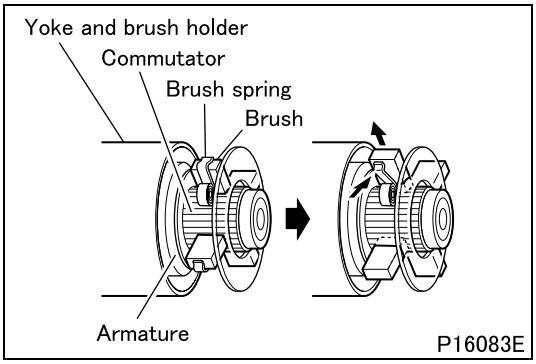

■ **Disassembly: Yoke and brush holder**

- Use the following method to remove the yoke and brush holder in order to prevent the commutator of the armature from being damaged by the brushes.
  - Lift the brushes away from the commutator and hold them lifted by applying the brush springs against the sides of the brush springs.

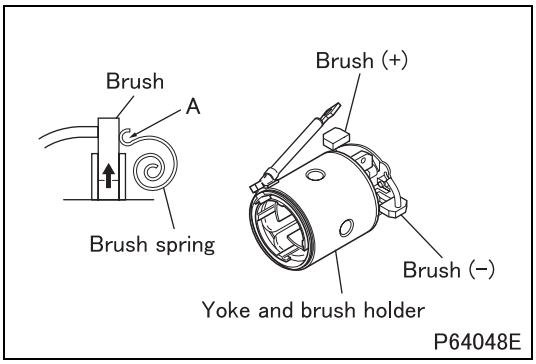

  - Pull part A of each brush spring and pull up the brushes.
  - Hold the brushes in position with the brush springs as illustrated.
  - Remove the yoke and brush holder.

■ **Disassembly: Gear shaft and internal gear**

- Remove the E-rings and then the gear shaft and internal gear from the overrunning clutch.
  Proceed as follows if the gear shaft cannot be removed due to interference of the splined section of gear shaft with internal parts of the overrunning clutch.
  - Press the gear shaft against the overrunning clutch.
  - Turn the gear shaft approx. 1/8 of a turn to change the position of splined section.

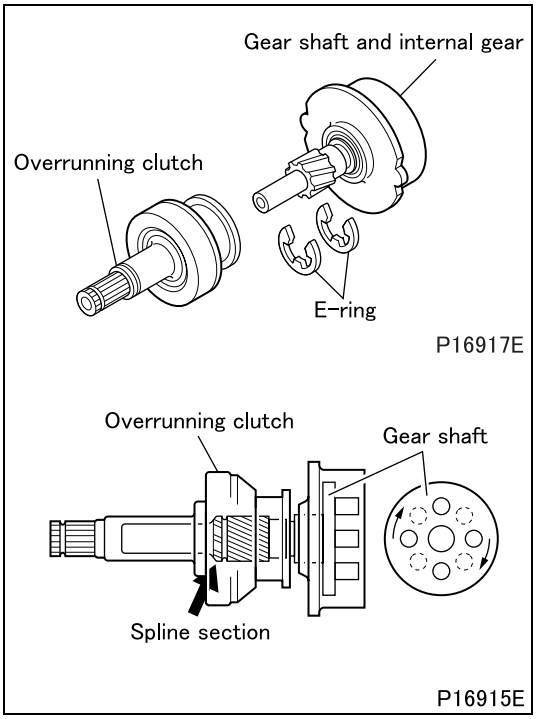

■ **Disassembly: Front bearing**

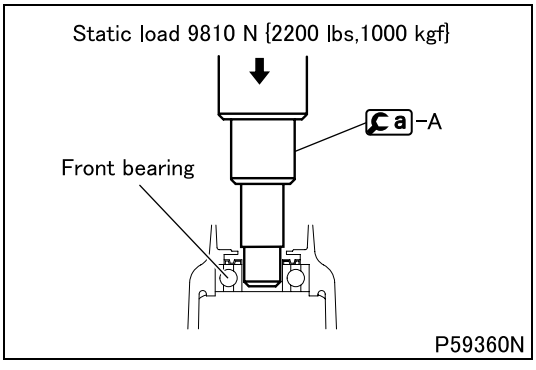

◆Inspection procedure◆

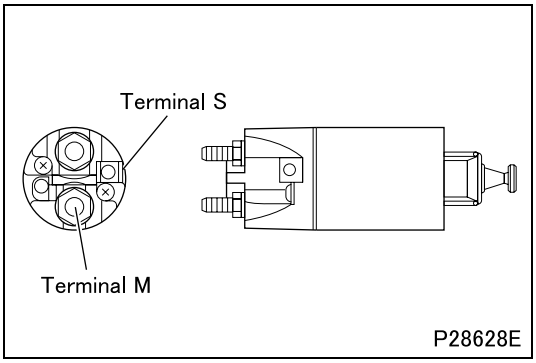

■ **Inspection: Magnetic switch**

- Perform the following checks, and if any fault is found, replace the switch.

(1) Test for coil open circuit

- Check that continuity exists between terminals S and M.

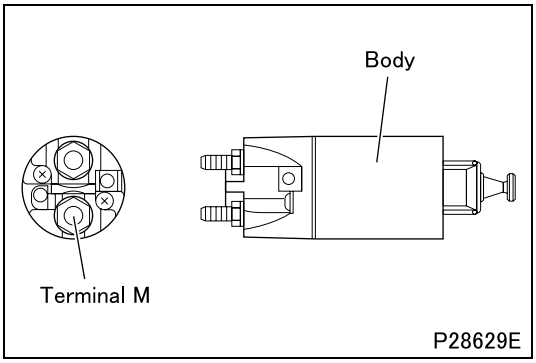

- Check that continuity exists between terminal M and the body.

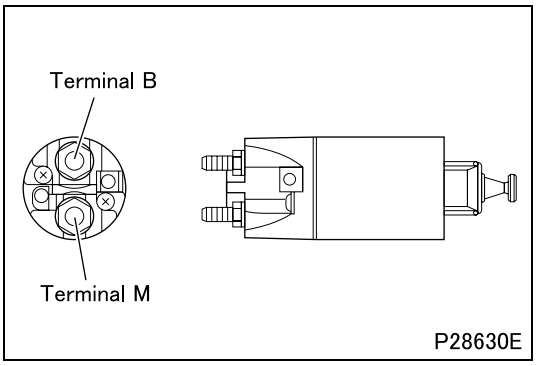

(2) Test for fused-together contacts

- Check that continuity does not exist between terminals B and M.

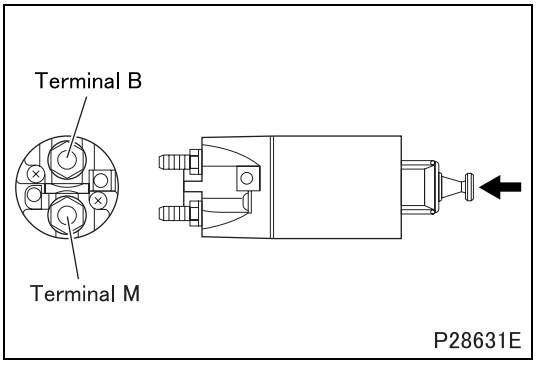

(3) Test for contact-to-contact continuity

- Push in the end of the magnetic switch to close the internal contacts. Then, check that continuity exists between terminals B and M.

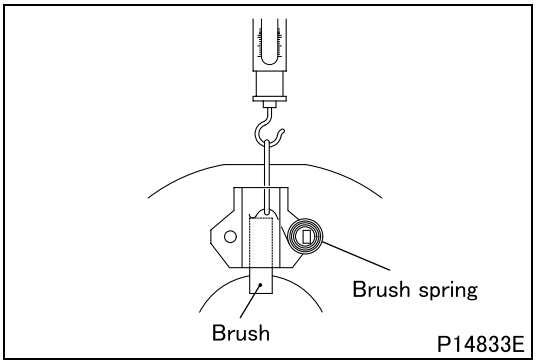

■ **Inspection: Brush spring pressure**

- Using new brushes, measure the load required to separate each brush spring from its brush.
- If either measurement is lower than the specified limit, replace the brush springs.

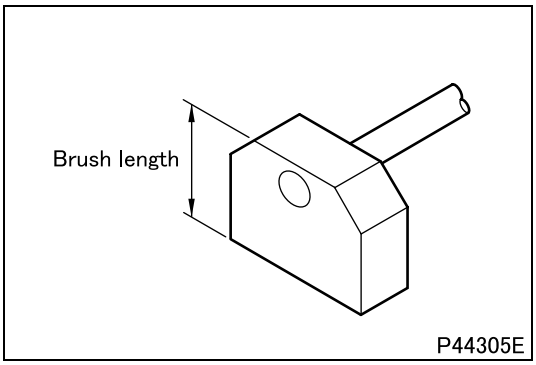

■ **Inspection: Brush (–)**

(1) Brush length

- If either brush (–) is shorter than the limit, it must be replaced.

CAUTION ⚠

- **Brush (–) must be replaced together with the brush holder.**

(2) Armature commutator contact surface of brush

- If the commutator contact surface of either brush is rough or unevenly worn, rectify it with emery paper (#300 to 500).

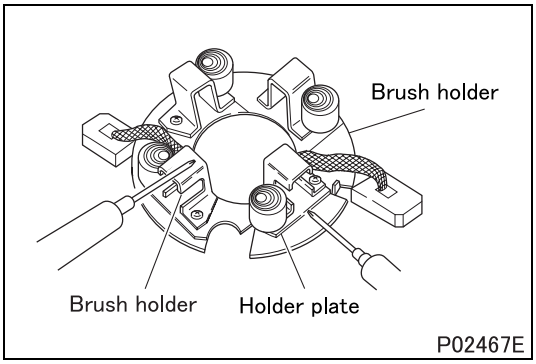

■ **Inspection: Brush holder**

- Thoroughly clean the (+) brush holder and the (–) holder plate, then, check that continuity does not exist between them.
- If continuity exists, there is a short circuit and the brush holder must be replaced.

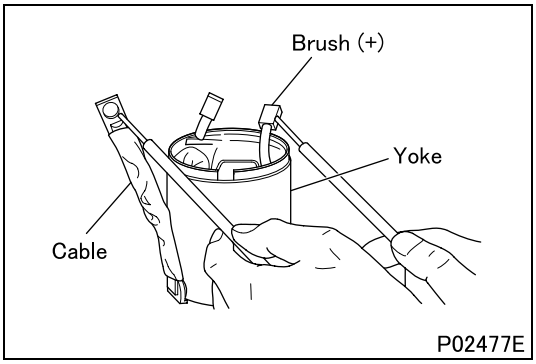

■ **Inspection: Yoke**

(1) Test for coil open circuit

- Check that continuity exists between the cable and the (+) brush.
- If there is no continuity, there is an open circuit and the yoke or (+) brush must be replaced.

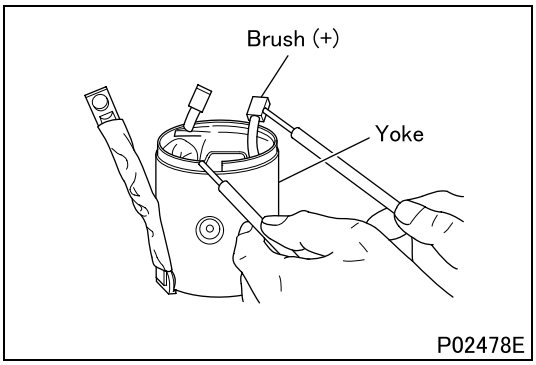

(2) Test for coil grounding

- Check that continuity does not exist between the yoke and the (+) brush.
- If continuity exists, the coil is grounded. Inspect the insulation, and replace the yoke and the (+) brush if the insulation cannot be rectified.

CAUTION ⚠

- **The coil may be grounded to the yoke due to the accumulation of worn-off metal particles from the brushes and/or armature.**

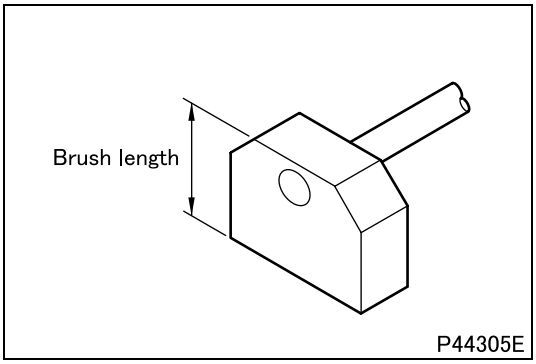

■ **Inspection: Brush (+)**

(1) Brush length

- If either brush (+) is shorter than the limit, it must be replaced.

(2) Armature commutator contact surface of brush

- If the commutator contact surface of either brush is rough or unevenly worn, rectify it with emery paper (#300 to 500).

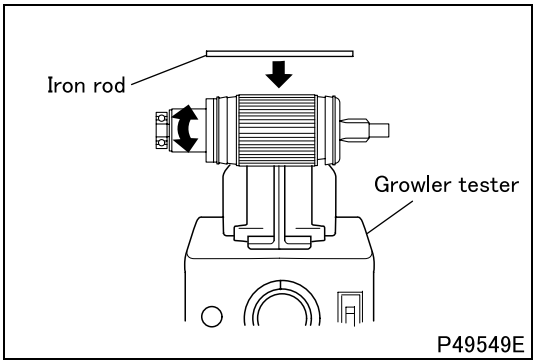

■ **Inspection: Armature**

(1) Test for coil short circuit

- Hold an iron rod parallel with the armature.
- Slowly rotate the armature by hand.
- If the iron rod vibrates or is pulled toward the armature, the coil is short-circuited and the armature must be replaced.

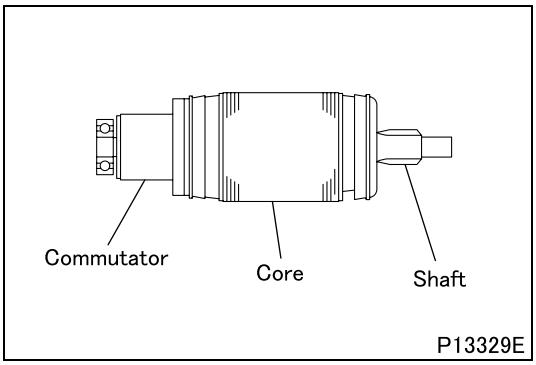

(2) Test for coil grounding

- Check that continuity does not exist between the commutator and the core (or shaft).
- If continuity exists, the coil is grounded and the armature must be replaced.

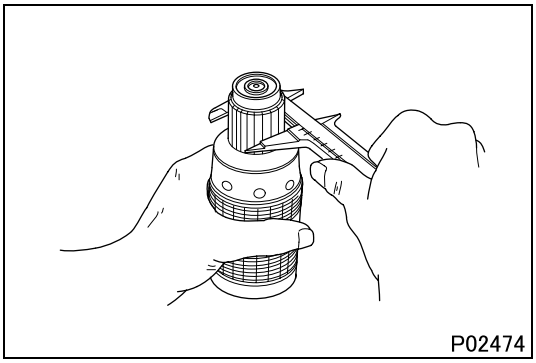

(3) Commutator outside diameter

- If the measurement is out of specification, replace the armature.

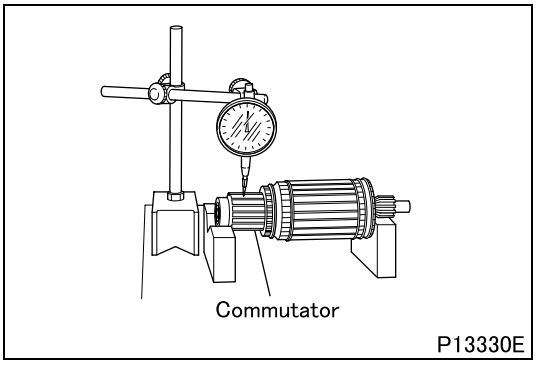

(4) Runout of commutator periphery

- If the reading exceeds the specified limit, rectify the commutator of the armature, making sure the outside diameter stays within specification.

(5) Condition of commutator surface

- If the surface is rough or has stepped wear, rectify it with emery paper (#300 to 500).
- After rectifying the surface, check the extent of commutator runout.

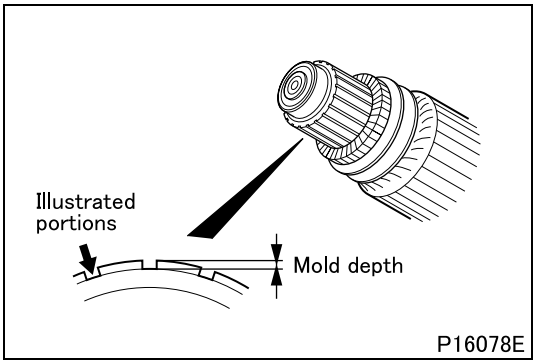

(6) Mold depth between segments

- If the measurement is lower than the specified limit, rectify or replace the armature.
- To rectify the armature, grind the illustrated portions.

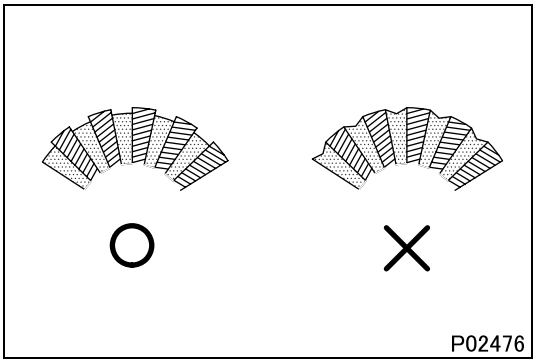

- If the mold is worn as illustrated, rectify or replace the armature.

○: Acceptable
×: Unacceptable

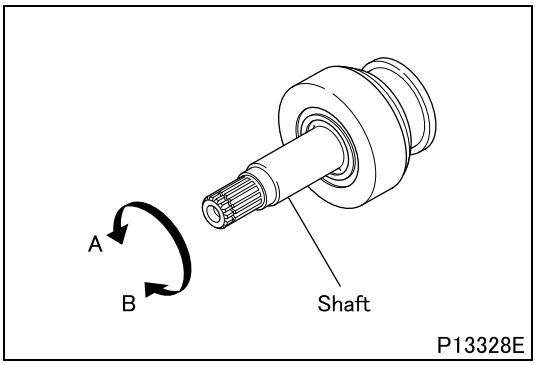

■ Inspection: Overrunning clutch

- If the following inspections reveal any abnormality, replace the overrunning clutch.
- Turn the shaft in direction B and check that it rotates smoothly.
- Turn the shaft in direction A and check that it locks.

◆Assembly procedure◆

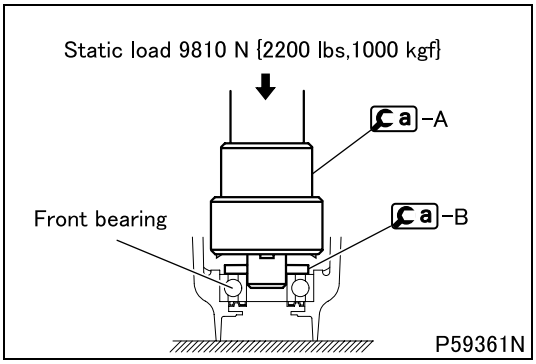

■ Assembly: Front bearing

- Press-fit the front bearing using Ca-A and Ca-B.

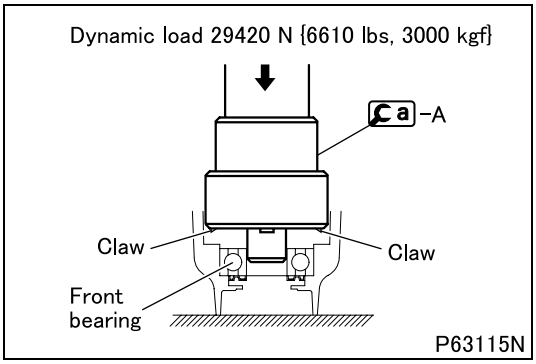

- After the press fitting, caulk the front bearing using the claws on Ca -A.

CAUTION ⚠

- **Avoid re-caulking previously caulked points.**

■ Assembly: Yoke and brush holder

- To install the yoke and brush holder, follow the removal sequence in reverse.
  (See "■ **Disassembly: Yoke and brush holder**".)

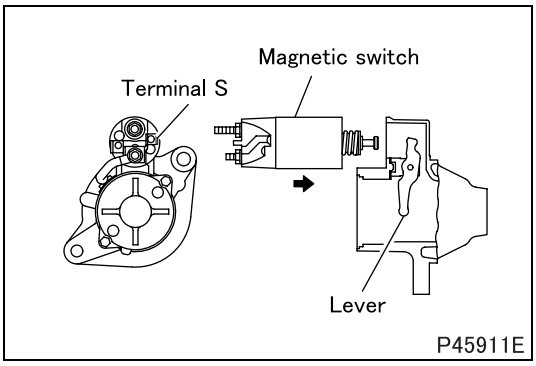

■ Assembly: Magnetic switch

- Fit the magnetic switch onto the lever with terminal S aligned as illustrated.

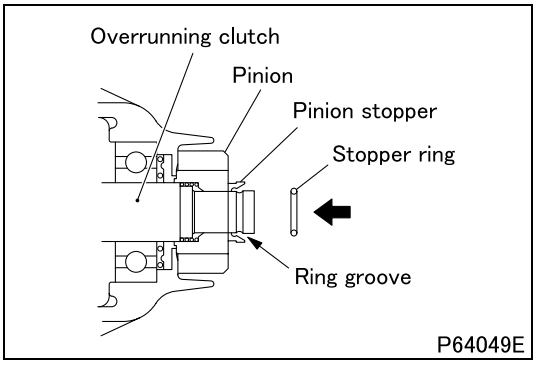

■ Assembly: Pinion

- For installation of the pinion, it is not necessary to supply current to the starter.
  - Fit the pinion stopper and pinion onto the overrunning clutch, making sure they are oriented as illustrated.
  - Fit the stopper ring into the ring groove of the overrunning clutch.

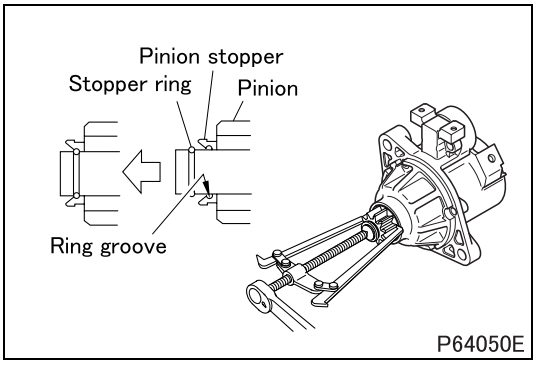

- Pull the pinion hard and securely fit the stopper ring into the ring groove of the pinion stopper.

◆Inspection after assembly◆

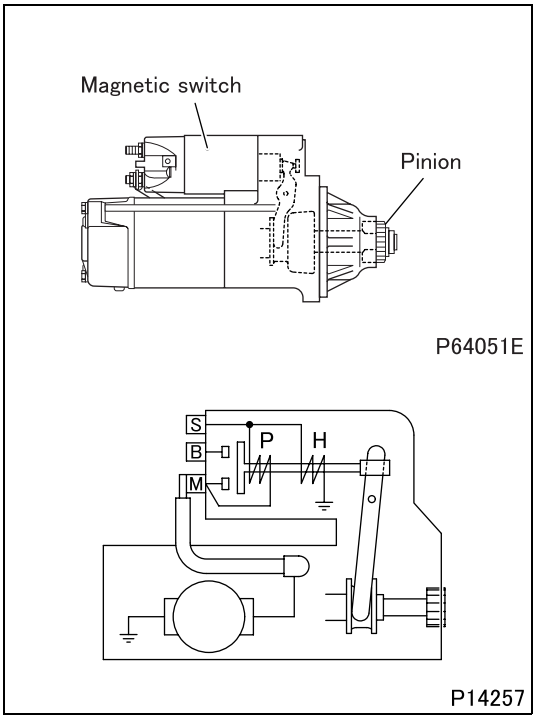

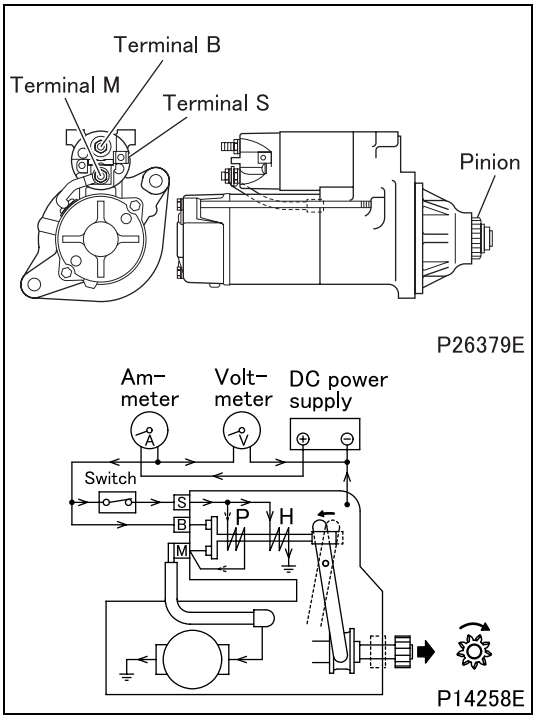

■ **Inspection: Performance and pinion gap**

- After assembling the starter, perform inspections with current supplied to it.

WARNING ⚠

- **When the starter is energized, the pinion will spring out and rotate. Be careful not to touch it with your hands.**
- **The magnetic switch may become very hot during inspections. Be careful when touching it.**

CAUTION ⚠

- **Do not energize the pull-in coil P for longer than 10 seconds, and do not energize the holding coil H for longer than 30 seconds. If these periods are exceeded, the coils may overheat and burn out.**
- **When current is supplied to the starter, a large current (100 A or higher) will flow. For inspection purposes, booster cables or similarly thick cables must therefore be used. It is also important to ensure that all connections are secure.**

(1) Performance test

- Connect the starter as illustrated.
- Set the voltage to 11 Volts DC.

CAUTION ⚠

- **The voltage applied must not exceed 12 V.**

- The following operations are performed with current supplied to the starter. Thus, the entire test (consisting of measurement of the current flowing through the starter and measurement of the starter's rotational speed) must be completed within 30 seconds.
  - Turn ON the switch to supply current to the starter. The pinion will spring out and rotate.

CAUTION ⚠

- **When the switch is turned ON, the pull-in coil P and holding coil H are both energized. When the large current from the DC power supply flows from terminal B to terminal M, the supply of current to the pull-in coil P is cut; only the holding coil H remains energized. To prevent the holding coil from burning out, it is essential to complete all operations within 30 seconds.**

  - Measure the current and the starter's rotational speed. To measure the rotational speed, shine a stroboscope on the pinion.
  - Turn OFF the switch to de-energize the starter.
- If either measurement is out of specification, disassemble and inspect the starter again.

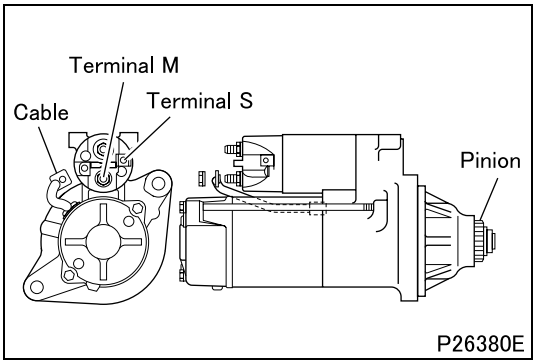

(2) Pinion gap

- Connect the starter as illustrated.

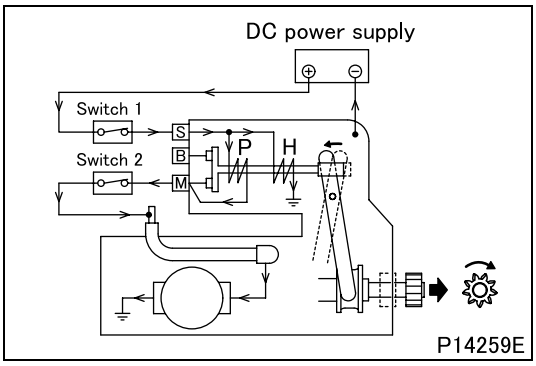

- The following operations are performed with current supplied to the starter. Thus, the entire procedure for measurement of the pinion gap must be completed within 30 seconds.
  - Turn ON switches 1 and 2 to supply current to the starter. The pinion will spring out and rotate.

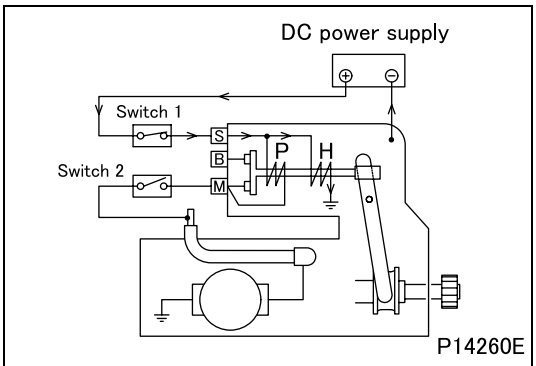

  - After the pinion starts to rotate, quickly (within five seconds) turn OFF switch 2 to stop the pinion's rotation.

CAUTION ⚠

- **When switches 1 and 2 are turned ON, the pull-in coil P and holding coil H are both energized. The circuit is connected such that no voltage is applied to starter terminal B, so current flows to the pull-in coil while the pinion rotates. To prevent the pull-in coil from burning out, it is essential to turn OFF switch 2 quickly (within five seconds) after the pinion starts to rotate.**

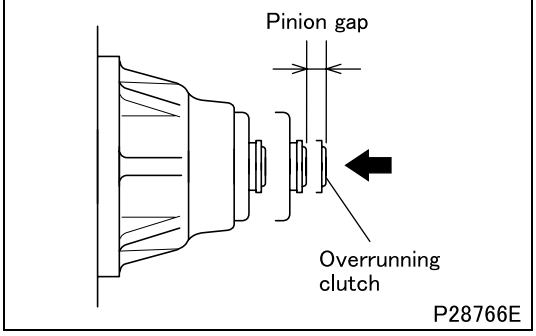

  - Pull out the end of the overrunning clutch and then lightly push in the end of the overrunning clutch and measure the amount of movement in the axial direction, i.e., the pinion gap.
  - Turn OFF switch 1 to de-energize the starter.
- If the measurement is out of specification, replace the lever.

#940 ALTERNATOR

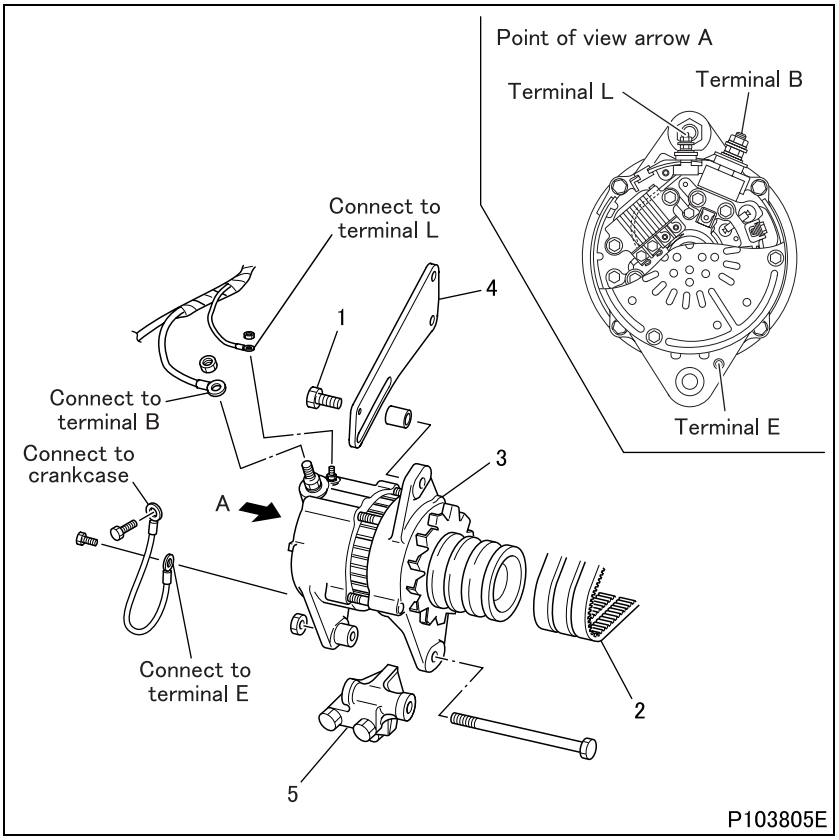

● **Removal sequence**

1 Adjusting bolt
2 Belt
3 Alternator
4 Adjusting plate
5 Bracket

WARNING ⚠

- **Before removing the alternator, disconnect the (–) battery cable and insulate the cable and the (–) battery terminal with tape.**
- **It is dangerous to leave the (–) battery cable connected since the battery voltage is always present at terminal B.**

● **Installation sequence**

Follow the removal sequence in reverse.

After installing the alternator, adjust the belt tension. (See Gr14.)

Service standards

Location	Maintenance item		Standard value	Limit	Remedy
3	Alternator output current (*when alternator is hot and producing 13.5 V)	At 1000 rpm	Approx. 20 A	–	Inspect
		At 2000 rpm	Approx. 80 A	–	
		At 3500 rpm	Approx. 100 A	–	
	Adjustment voltage of regulator (at 5000 rpm, 10 A is loaded)		14.2 ± 0.2 V	–	Replace

* The hot condition is that which occurs after the alternator has been running at normal ambient temperature with 5000 rpm and maximum output for 30 minutes.

◆Inspection procedure◆

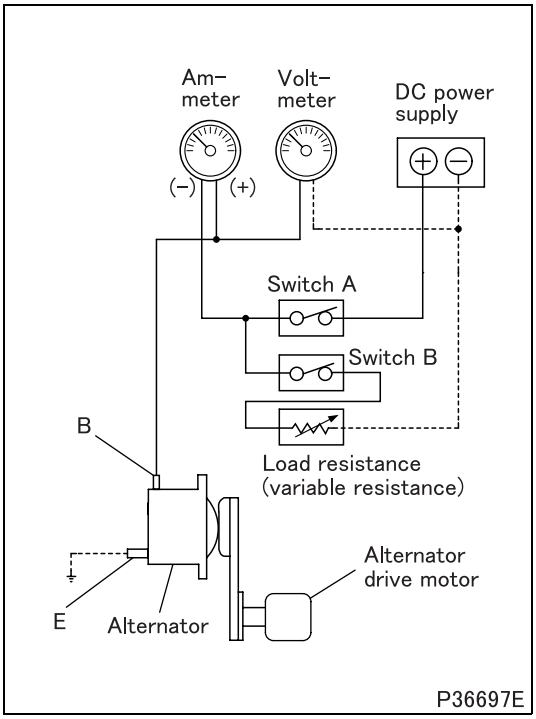

■ Inspection: Alternator

(1) Alternator output current (bench test)

- Connect the alternator as illustrated.

CAUTION ⚠

- **Wires with sufficient thickness should be used for wiring and each connection should be securely fastened.**

B: Terminal B
E: Terminal E

- Increase load resistance to the maximum (condition under which the load current hardly flows).
- Turn switch A and B ON.
- Run alternator at 5000 rpm for 30 minutes by adjusting load resistance so that electric current can conform to the following standard.
  Alternator nominal current

Current
Approx. 100 A

- Measure the current at each specified revolution of alternator.
- If the measured value is lower than the standard value, disassemble and check alternator.

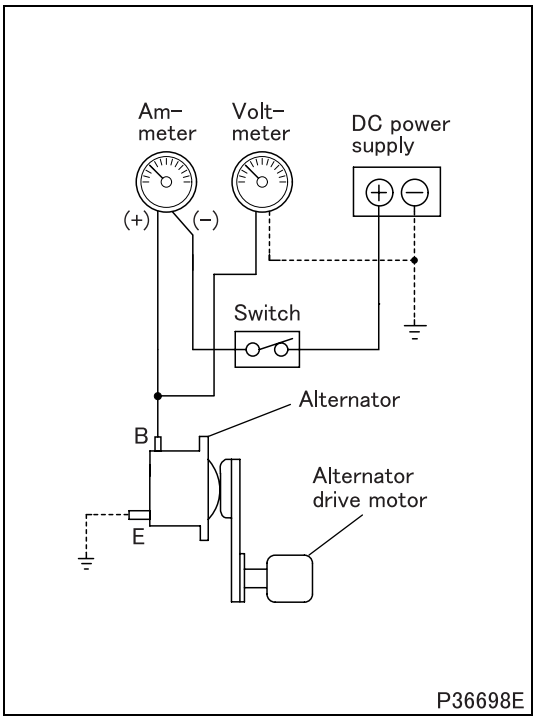

(2) Adjustment voltage of regulator (bench test)

- Connect the alternator as illustrated.

B: Terminal B
E: Terminal E

- Turn switch ON.
- Run alternator at low speeds.
- Increase the speed of alternator to 5000 rpm and measure the voltage (adjustment voltage) at this speed. At the same time, make sure that the current is 10 amperes or less at 5000 rpm.
- If the measured value deviates from the standard value, do as follows:
  - If higher than the standard value: Replace the regulator.
  - If lower than the standard value: Inspect the alternator related parts before replacing the regulator.

#940 ALTERNATOR

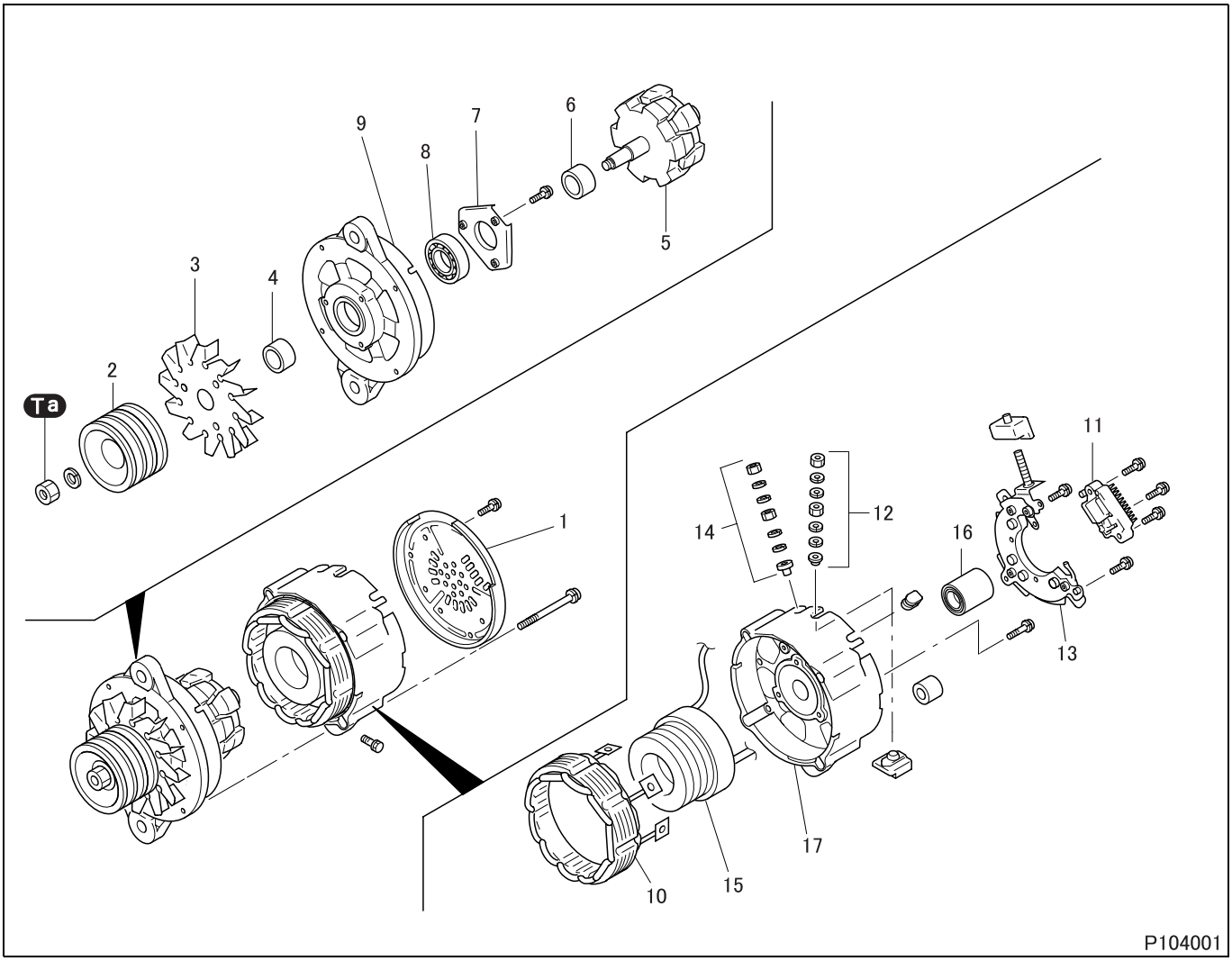

● **Disassembly sequence**

1 Rear cover
2 Pulley
3 Fan
4 Collar
5 Rotor
6 Collar
7 Bearing cover
8 Front bearing
9 Drive frame
10 Stator
11 Regulator
12 Terminal L
13 Rectifier
14 Terminal B
15 Exciting coil
16 Rear bearing
17 Rear frame

- Do not remove the front and rear bearing unless they are faulty.

● **Assembly sequence**

Follow the disassembly sequence in reverse.

Service standards (Unit: mm {in.})

Location	Maintenance item	Standard value	Limit	Remedy
5	Outer diameter of the portion that presses into the front bearing	25.00 to 25.01 {0.9842 to 0.9846}	24.99 {0.9838}	Replace
	Outer diameter of the portion that presses into the rear bearing	16.99 to 17.00 {0.6689 to 0.6693}	16.98 {0.6685}	
	Outer diameter of the portion that joins with the pulley	22.189 to 22.202 {0.8735 to 0.8741}	22.18 {0.8732}	
10	Resistance between the coil outlet terminals	0.01 to 0.10 Ω	–	Replace
15	Resistance between the coil outlet terminal	2 to 3 Ω	–	Replace

Tightening torque (Unit: N·m {ft.lbs, kgf·m})

Mark	Parts to be tightened	Tightening torque	Remarks
Ta	Nut (pulley mounting)	117.6 to 137.2 {26 to 31, 12 to 14}	–

◆Disassembly procedure◆

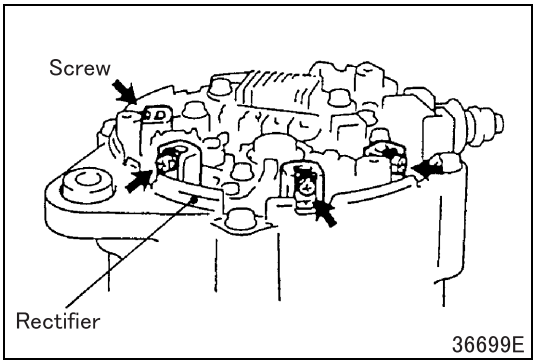

■ Disassembly: Drive frame

- Remove screw and separate the stator outlet terminal and the rectifier.

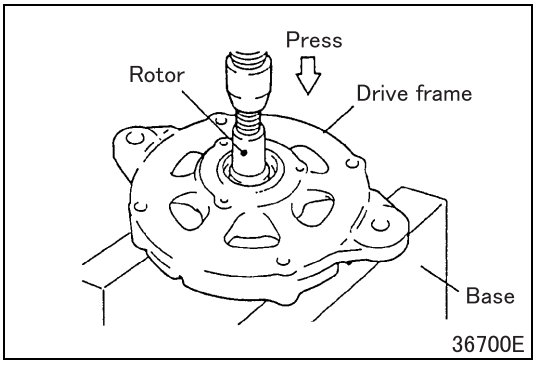

■ Disassembly: Rotor

- Using a press, remove the rotor from the drive frame.

CAUTION ⚠

- **Do not drop the rotor.**

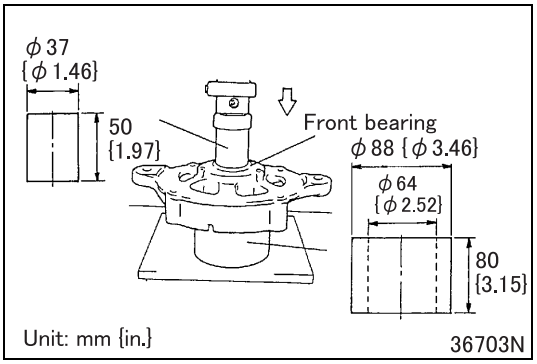

■ Disassembly: Front bearing

- Using a press, remove the front bearing from the drive frame.

CAUTION ⚠

- **Do not drop the front bearing.**

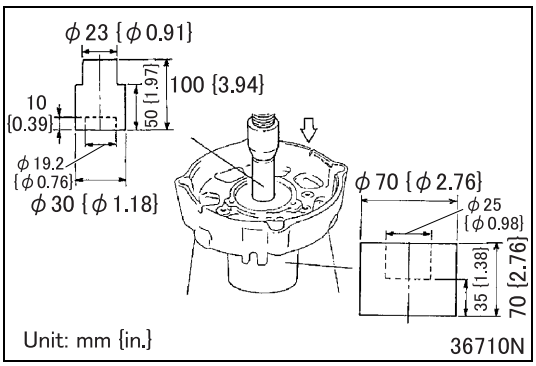

■ **Disassembly: Rear bearing**

- Using a press, remove the rear bearing from the rear frame.

CAUTION ⚠

- **Do not drop the rear bearing.**

◆Inspection procedure◆

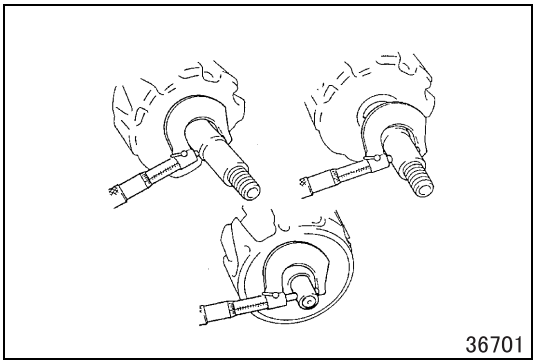

■ **Inspection: Rotor**

- Measure the outer diameter of the portion as shown.
- If the measured value deviates from the standard value, replace the rotor.

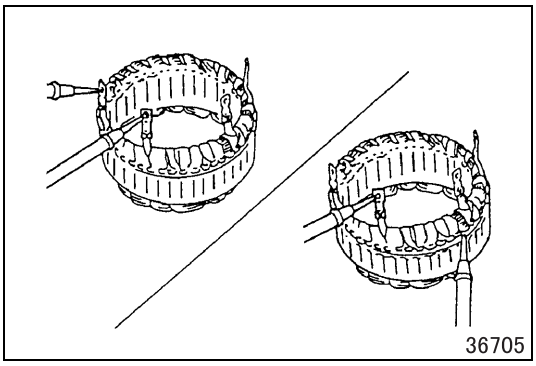

■ **Inspection: Stator**

- Measure the resistance between the coil outlet terminals. (using a circuit tester)
- Measure the resistance between the coil outlet terminal and core. (using a megger tester)
- If the measured value deviates from the standard value, replace the stator.

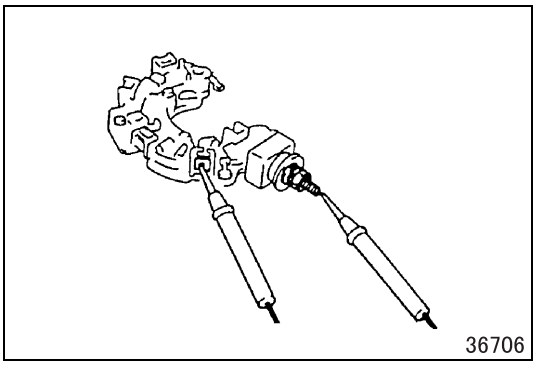

■ **Inspection: Rectifier**

- Check for continuity between the terminal B and the heat sink.
- When polarity is changed, there is continuity in one direction but not in the opposite direction.

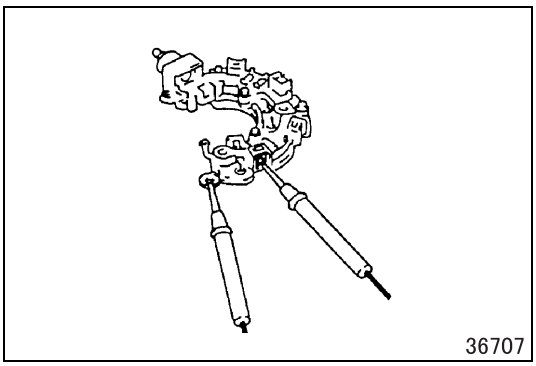

- Check for continuity between the terminal (–) and the heat sink.
- When polarity is changed, there is continuity in one direction but not in the opposite direction.

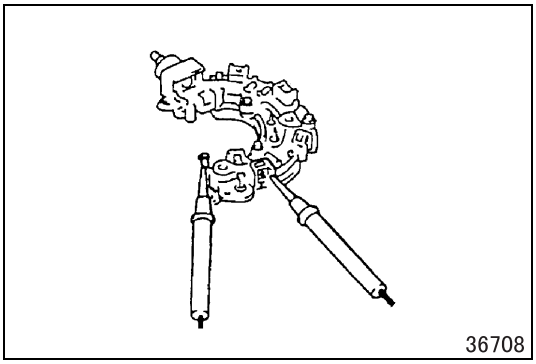

- Check for continuity between the auxiliary diode terminal and the heat sink.
- When polarity is changed, there is continuity in one direction but not in the opposite direction.

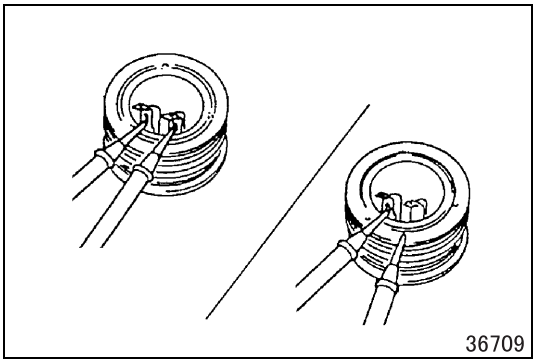

■ Inspection: Exciting coil

- Measure the resistance between the coil outlet terminal. (using a circuit tester)
- Measure the resistance between the coil outlet terminal and core.
- If the measured value deviates from the standard value, replace the exciting coil.

◆Assembly procedure◆

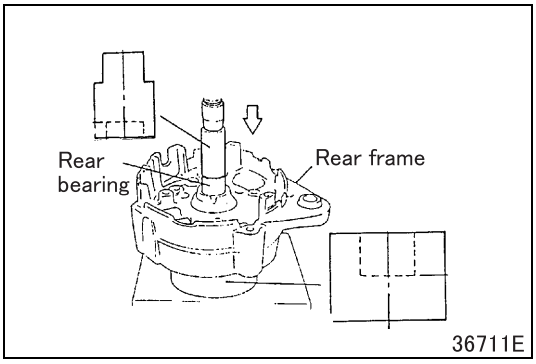

■ Assembly: Rear bearing

- Using a press, press a new rear bearing into the rear frame.

CAUTION ⚠

- **Once a bearing is removed, do not reuse it.**

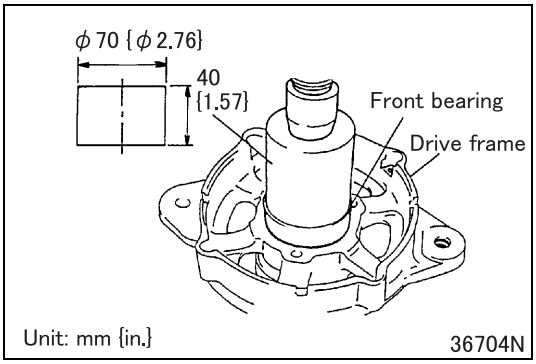

■ **Assembly: Front bearing**

- Using a press, press the front bearing into the drive frame.

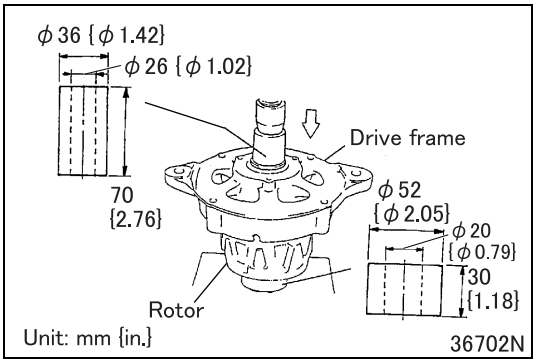

■ **Assembly: Rotor**

- Using a press, press the rotor into the bearing in the drive frame.

CAUTION ⚠

- **Press the rotor while making sure that the rotor's shaft is perpendicular to the bearing. During pressing, make sure not to damage the portion of the rotor that presses into the rear bearing.**

54-13 ON-VEHICLE INSPECTION AND ADJUSTMENT

#950 INSPECTION OF ALTERNATOR

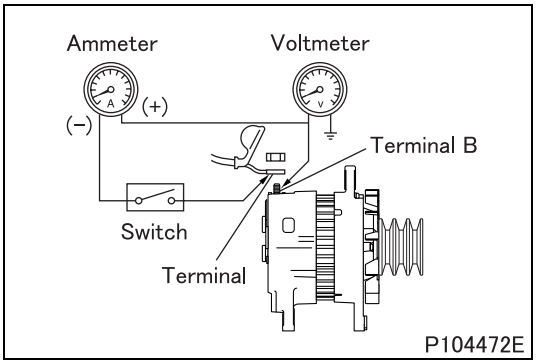

Performance test

- The on-vehicle inspection is only a simplified check. Use a test bench for accurate checking.
- Connect the meters to the alternator as shown.

WARNING ⚠

- **To prevent possible injury, be sure to disconnect the negative battery cable and insulate the cable and the negative battery terminal with tape before working on the wiring. With the negative (–) battery cable connected, battery voltage is always applied to terminal B.**
- **To connect to switch, use a lead wire with the same or larger diameter than that of the chassis harness connected to terminal B.**

- Turn on switch and make sure that voltmeter indicates battery voltage.
- Start the engine.
- Immediately turn on the switches for all lamps on the vehicle.
- Immediately accelerate the engine to the speed indicated below and measure the alternator's output current.
  Approx. 2400 rpm
- The alternator is considered to be good if the measured value is 70% or more of the nominal output current.
  Alternator nominal output

Voltage	Output current
12 V	100 A

Service standards

Location	Maintenance item	Standard value	Limit	Remedy
–	Adjusting voltage	14.2 ± 0.2 V	–	Replace

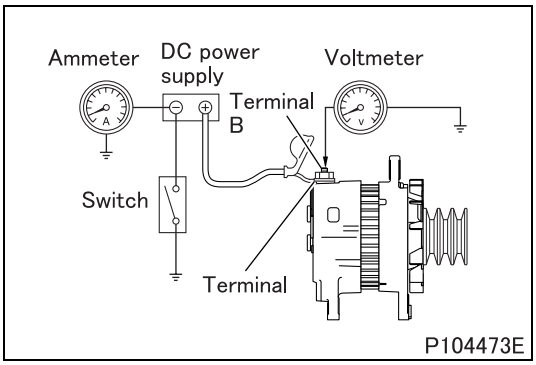

- Connect the meters to the alternator as shown.

WARNING ⚠

- **To prevent possible injury, be sure to disconnect the negative battery cable and insulate the cable and the negative battery terminal with tape before working on the wiring. With the negative (–) battery cable connected, battery voltage is always applied to terminal B.**
- **To connect to switch, use a lead wire with the same or larger diameter than that of the chassis harness connected to terminal B.**

- Turn off the switches for lamps, heater, etc. so that electric loads may not be applied during the inspection.
- Turn on switch and then start the engine.
- If the output current is 5 amperes or less when the engine speed is raised to the appropriate speed indicated below, then measure the voltage at terminal B.
  Approx. 2400 rpm
- If the output current is 10 amperes or more, do one of the following:
  - Run the engine for a while to charge the battery.
  - Replace the battery with a fully-charged one.
- If the measured value deviates from the standard value, conduct checking again on the test bench.

#955 INSPECTION OF PREHEATING SYSTEM

1. Preparation for inspection

Service standards

Location	Maintenance item			Standard value	Limit	Remedy
–	Coolant temperature	Pre-glow time	60°C {140°F} or higher	No pre-glow operation	–	Inspect
			0 to 60°C {32 to 140°F}	About 12 seconds	–	
			0°C {32°F} or below	About 12 seconds	–	
		After-glow time	60°C {140°F} or higher	No after-glow operation	–	
			0 to 60°C {32 to 140°F}	No after-glow operation	–	
			0°C {32°F} or below	About 20 seconds	–	
		Indicator lamp ON time	60°C {140°F} or higher	No illumination	–	
			0 to 60°C {32 to 140°F}	No illumination	–	
			0°C {32°F} or below	About 8 seconds	–	

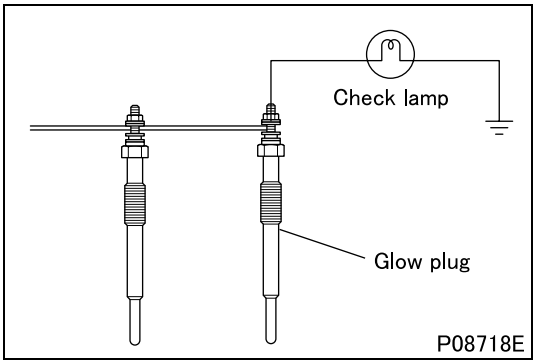

- Turn the starter switch to OFF.
- Connect a check lamp to the glow plug.

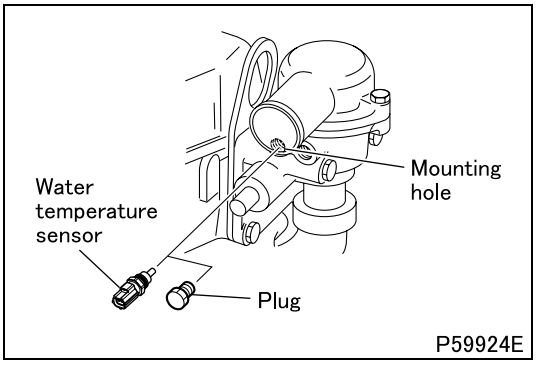

- Remove the water temperature sensor from the engine, and close the sensor mounting hole with the plug (M16 × 1.5 mm).

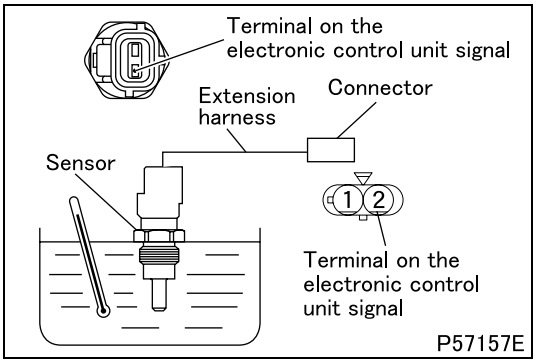

- Connect the extension harness between the water temperature sensor and connector.
- Place the water temperature sensor in a container of water.
- Conduct the following test while changing the temperature of water in the container. If anything abnormal is found, check relevant components.

(1) Pre-glow time and indicator lamp ON time checking

- Turn the starter switch to ON (without starting the engine), and confirm that the pre-glow time and indicator lamp ON time at each water temperature conform with standard values.
- Measure the illuminating time of the check lamp to measure the pre-glow time.
- Measure the meter cluster glow lamp illuminating time to measure the indicator lamp ON time.

(2) After-glow time checking

- Start the engine, and measure how long the illumination of check lamp lasts after the glow lamp on the meter cluster goes out to ensure that the after-glow time conforms with the standard value.

#960 HEADLAMP AIMING

1. Preparation before Adjustment

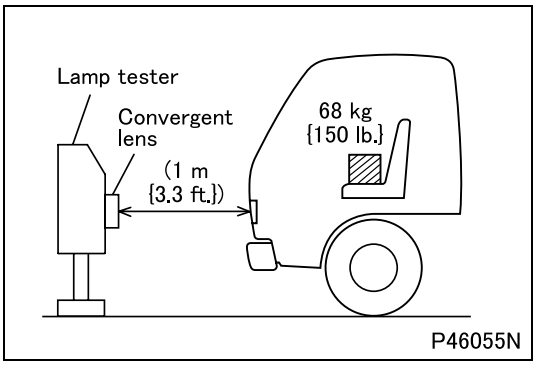

- Park the vehicle on a level place.

WARNING ⚠

- **Be sure to put tire chocks securely in place.**

- Unload the vehicle and make sure no one is in it.
- Inflate the tires to the specified pressure. (See Gr31.)
- Seat one person of an equivalent mass (68 kg {150 lb.}) in the vehicle.
- Start the engine and check that the battery is being charged.
- Place convergent lamp tester and the vehicle facing each other as shown in the drawing.
- Align the center of headlamp bulb and the center of convergent lens of convergent lamp tester. (The drawing shows the left-hand headlamp.)

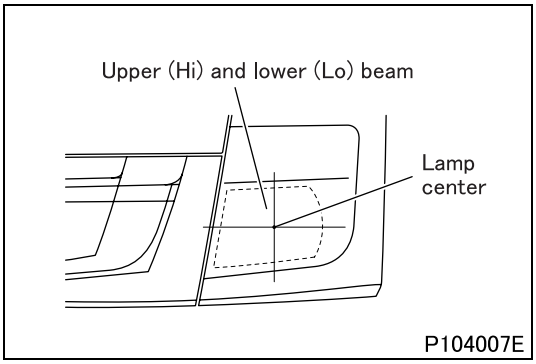

2. Adjustment

WARNING ⚠

- **Do not mask a lit headlamp for more than 10 minutes or the heat generated might cause a fire.**

2.1 Adjustment of lower beam

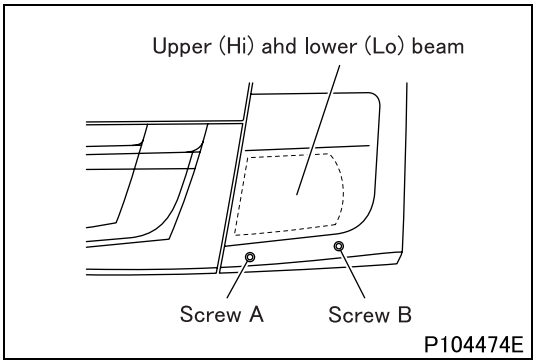

- Turn on lower beam.
- Make adjustment by the following procedure so that the elbow point of lower beam cut-off line is in the illustrated position.
- Vertical adjustment: Adjust by turning screws A and B in this order by the same amount.
- Horizontal adjustment: Turn screw B.

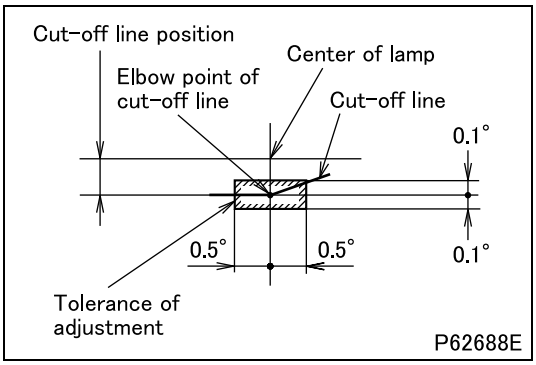

- Adjust the optical axes of the lower beams so that the cut-off line position can conform to the standard value.

	Standard value
Cut-off line position	0.69° <FK (leaf suspension)> 0.57° <FK (air suspension)> 0.86° <FM>

Adjusting direction for optical axis

<Left-hand headlamp>

	Upward	Downward	Leftward	Rightward
Screw A	Counter-clockwise	Clockwise	–	–
Screw B	Counter-clockwise	Clockwise	Clockwise	Counter-clockwise

<Right-hand headlamp>

	Upward	Downward	Leftward	Rightward
Screw A	Counter-clockwise	Clockwise	–	–
Screw B	Counter-clockwise	Clockwise	Counter-clockwise	Clockwise

#965 INSPECTION OF BRAKE FLUID LEVEL SWITCH

<Center parking>

Service standards (Unit: mm {in.})

Location	Maintenance item	Standard value	Limit	Remedy
–	Warning lamp lighting position for brake fluid level switch	$57^{+3.5}_{-0.5}$ $\{2.24^{+0.14}_{-0.02}\}$	–	Replace

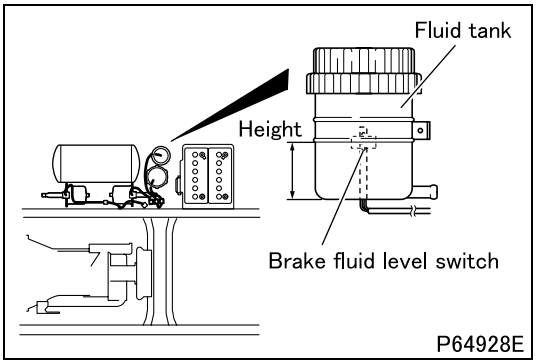

- Start engine.
- Drain the brake fluid gradually from fluid tank.

CAUTION ⚠

- **If brake fluid is spilt on any part of the vehicle, wipe it off immediately, since the solvent in the fluid can damage the paintwork.**

- Measure height of brake fluid level switch when warning lamp within the meter cluster lights.
- If the measured value deviates from the standard value, remove and check fluid tank.
- Removal, installation (See Gr35A.)
- Inspection (See #041.)

54-14 CONNECTOR CONFIGURATION CHART

CONNECTOR CONFIGURATION CHART

AA type

Number shows number of pins	Female connector	Male connector
AA1A		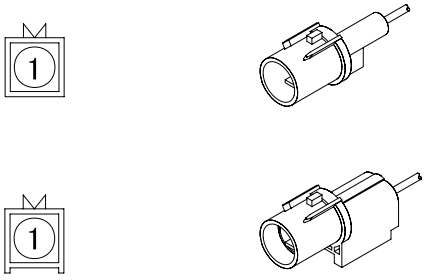
AA2A	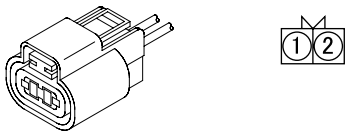	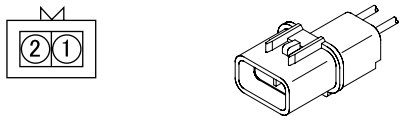
AA2B	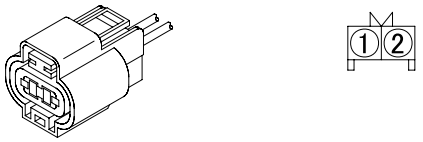	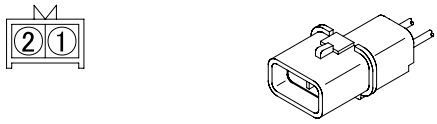
AA3A		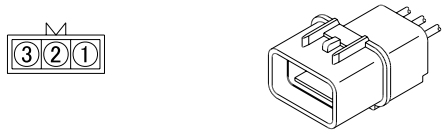
AA3B	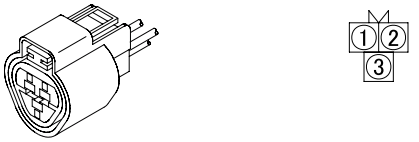	
AA4A	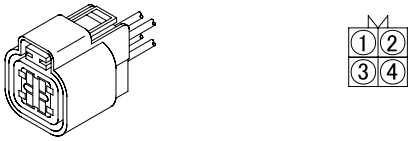	
AA4B	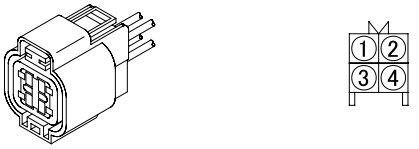	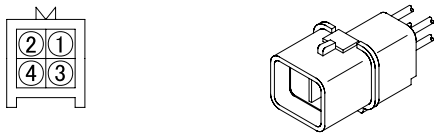
AA6A	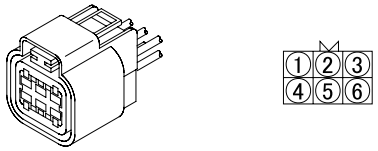	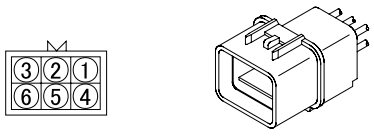

Number shows number of pins	Female connector	Male connector
AA6B	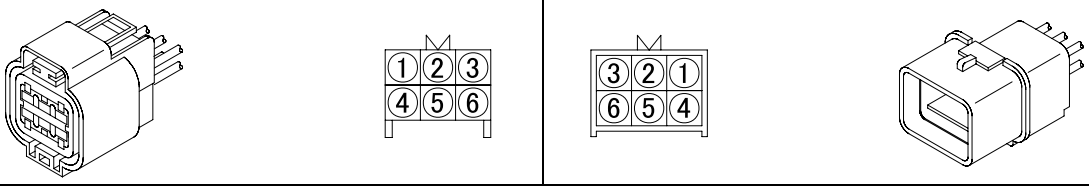	
AA8A	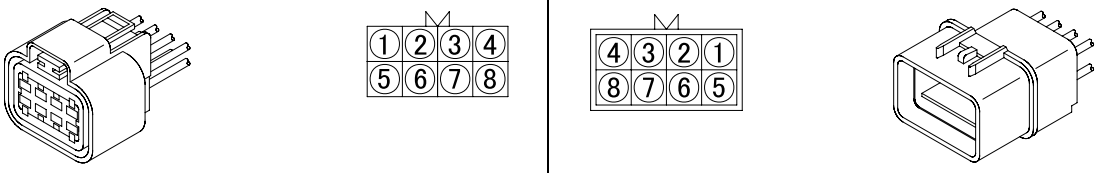	
AA10A	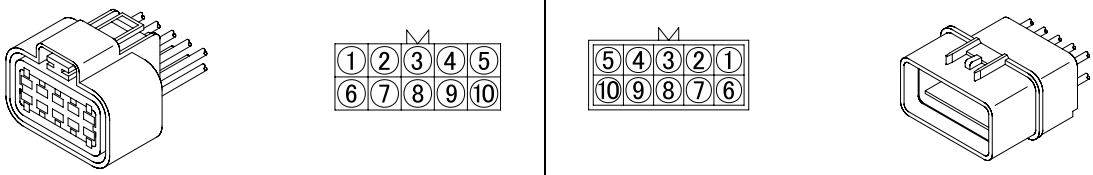	
AA12A	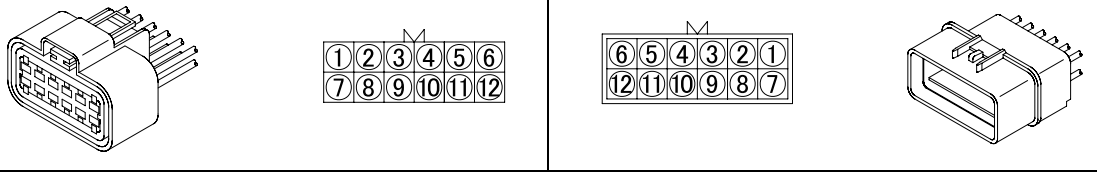	

AB type

Number shows number of pins	Female connector	Male connector
AB1A	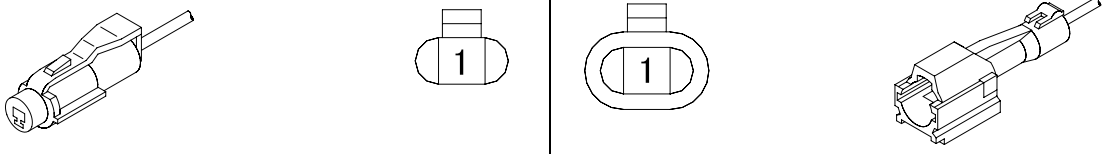	
AB2A	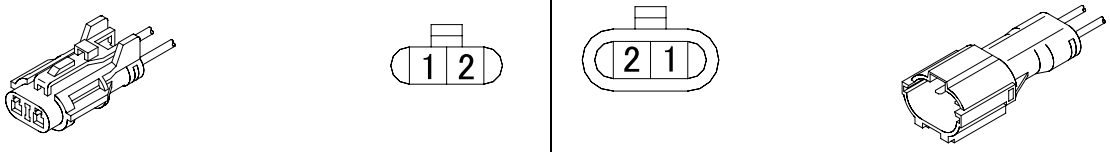	
AB2B	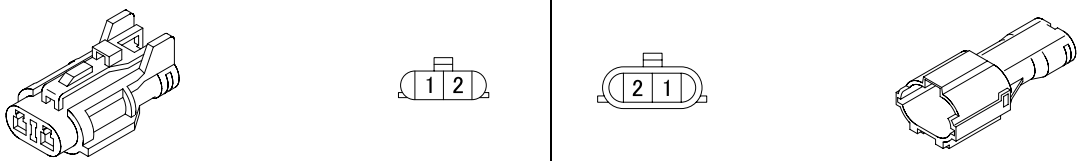	
AB2C	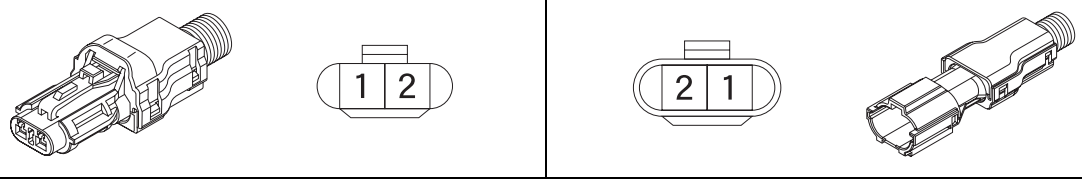	

CONNECTOR CONFIGURATION CHART

Number shows number of pins	Female connector	Male connector
AB3A	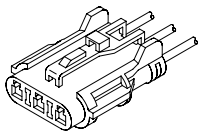 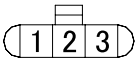	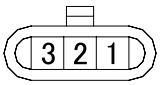 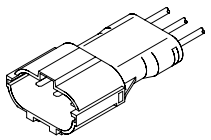
AB3B	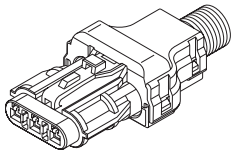 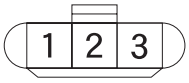	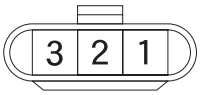 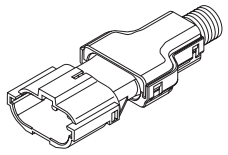
AB4A	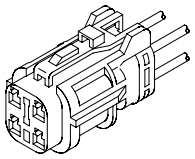 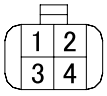	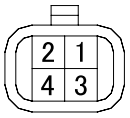 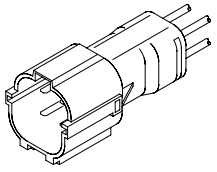
AB6A	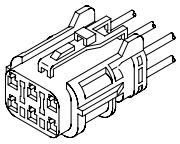 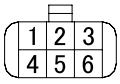	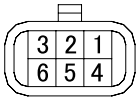 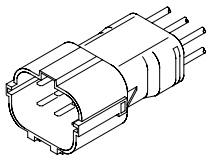
AB6B	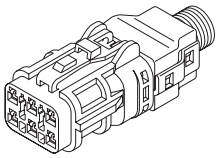 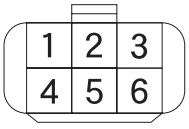	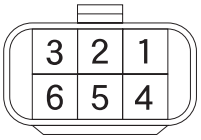 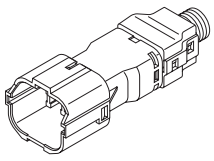
AB8A	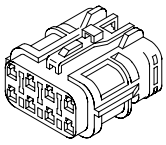 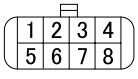	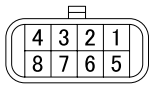 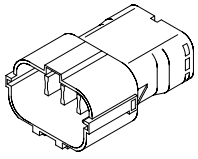
AB8B	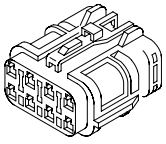 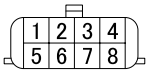	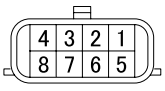 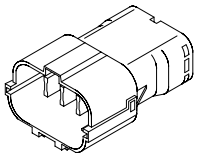
AB12A	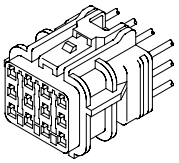 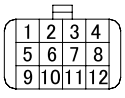	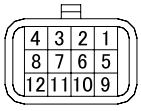 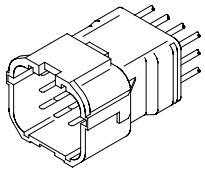 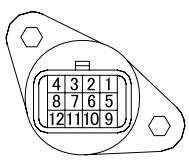 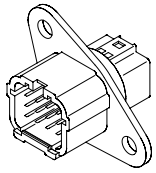

Number shows number of pins	Female connector	Male connector
AB12B	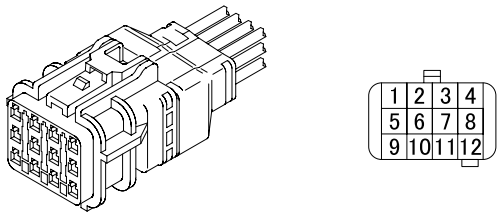	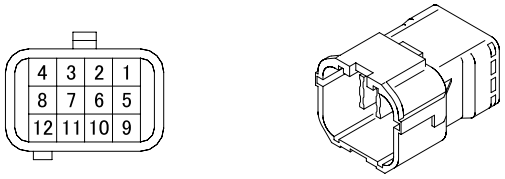
AB14A	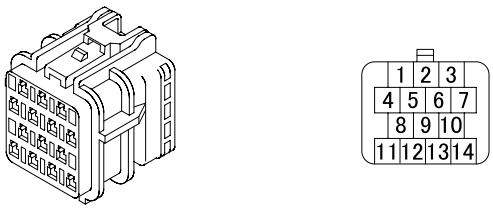	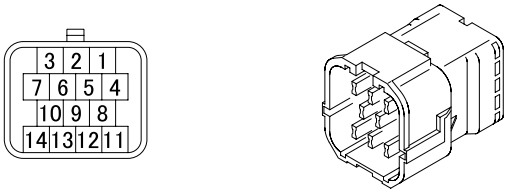
AB14B	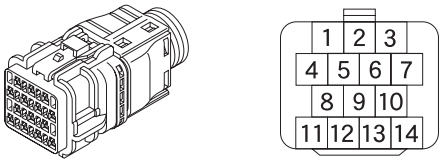	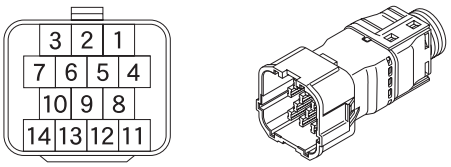
AB16A		
AB16B		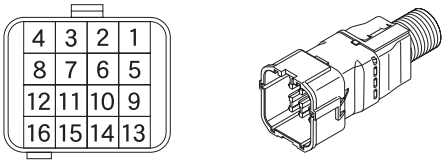
AB52A	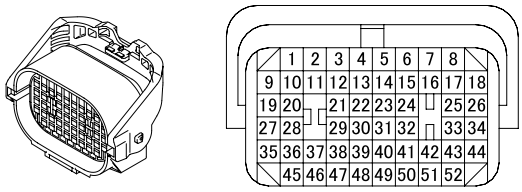	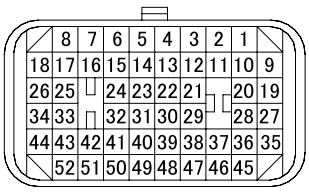
AB52B	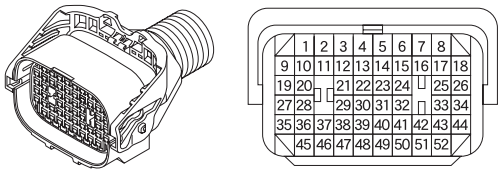	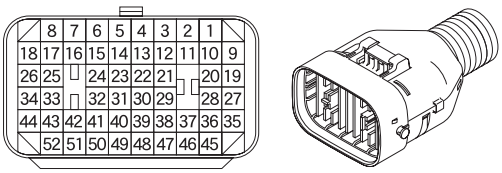

CONNECTOR CONFIGURATION CHART

AC type

Number shows number of pins	Female connector	Male connector
AC1A	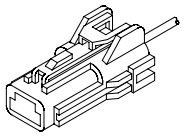	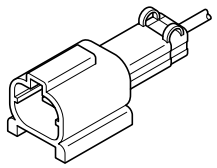
AC1B	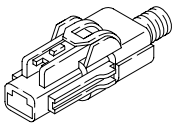	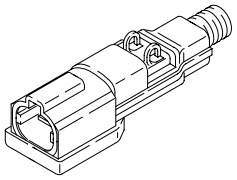
AC2A	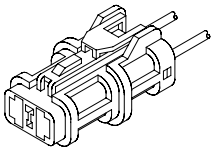	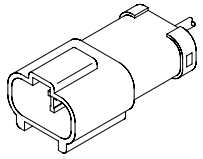
AC2B	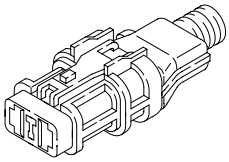	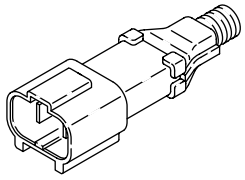
AC2C	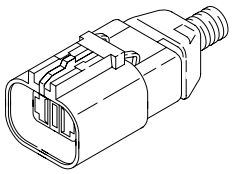	
AC2D	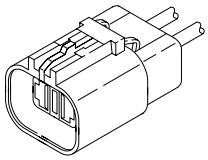	
AC3A	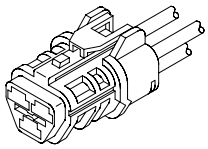	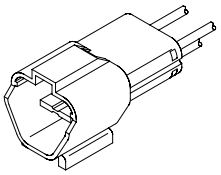
AC4A	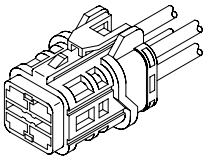 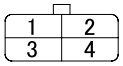	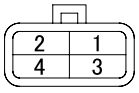 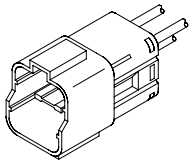
AC4B	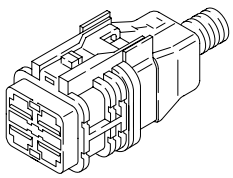	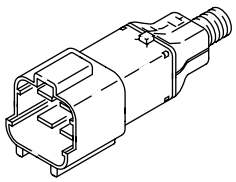

AD type

Number shows number of pins	Female connector	Male connector
AD1A	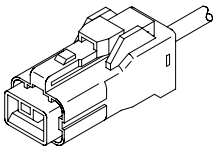	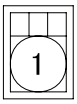 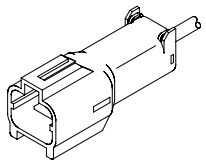
AD2A	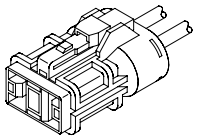 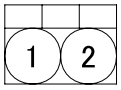	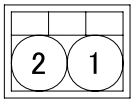 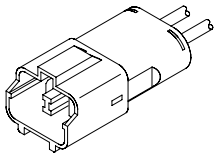
AD2B	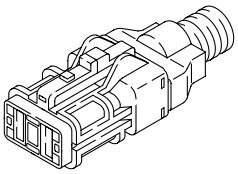	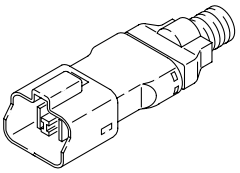

AE type

Number shows number of pins	Female connector	Male connector
AE2A	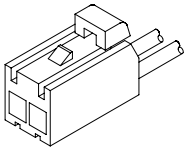	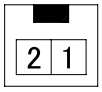 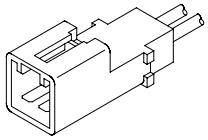
AE3A	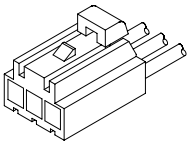 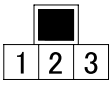	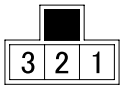 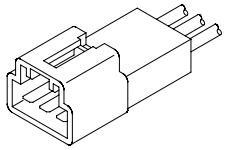
AE5A	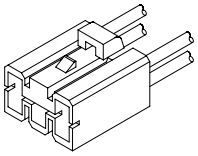 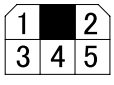	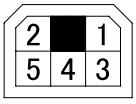 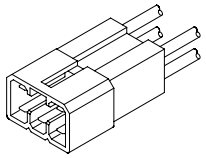
AE7A	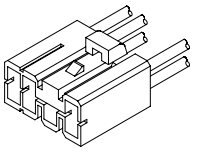 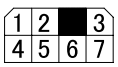	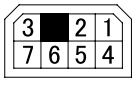 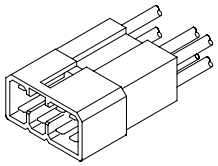
AE9A	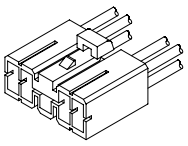 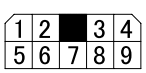	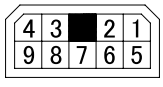 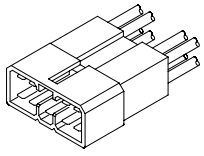

CONNECTOR CONFIGURATION CHART

Number shows number of pins	Female connector	Male connector
AE11A	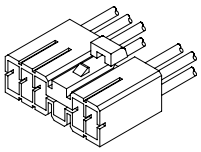 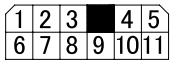	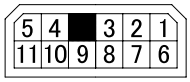 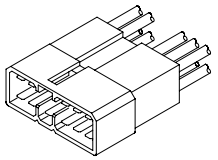
AE13A	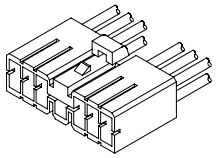 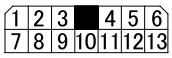	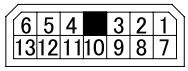 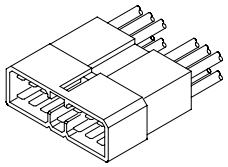
AE15A	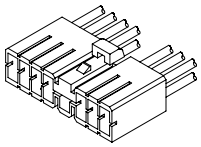 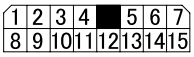	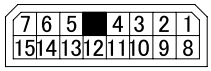 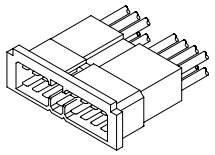
AE16A	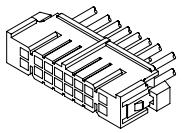 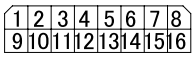	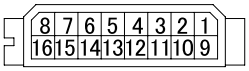 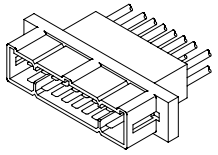
AE16B	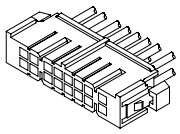 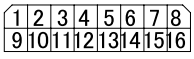	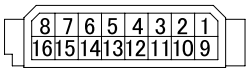 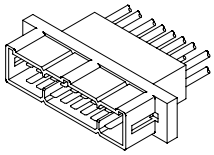
AE16C	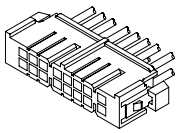 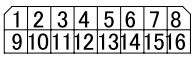	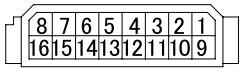 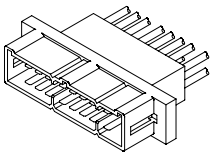
AE17A	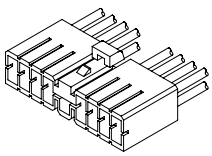 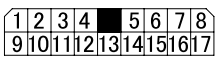	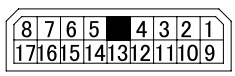 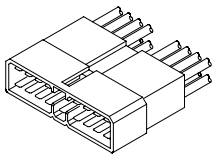

AG type

Number shows number of pins	Female connector	Male connector
AG16A	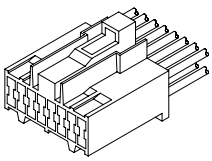 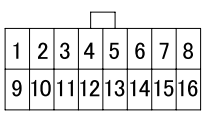	

Number shows number of pins	Female connector	Male connector
AG20A	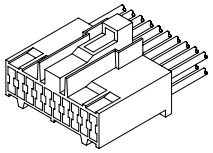 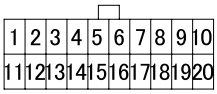	

AH type

Number shows number of pins	Female connector	Male connector
AH10A	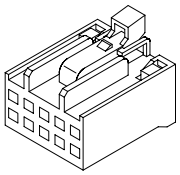 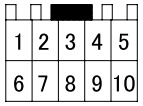	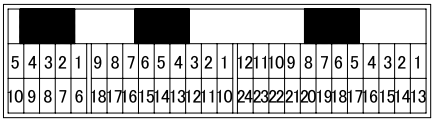 AH10A （AH18A） （AH24A） 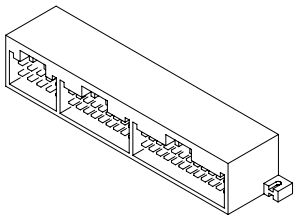
AH12A	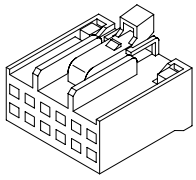 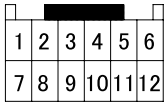	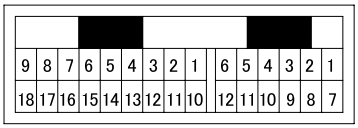 （AH18B） AH12A 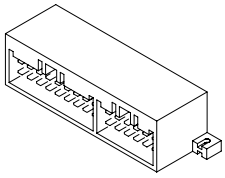
AH12B	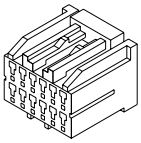 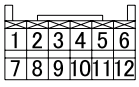	
AH16A	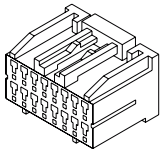 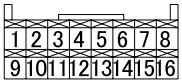	

CONNECTOR CONFIGURATION CHART

Number shows number of pins	Female connector	Male connector
AH18A	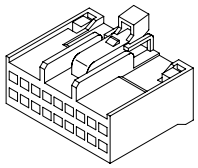 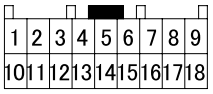 1 2 3 4 5 6 7 8 9 10 11 12 13 14 15 16 17 18	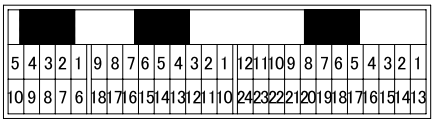 5 4 3 2 1 9 8 7 6 5 4 3 2 1 12 11 10 9 8 7 6 5 4 3 2 1 10 9 8 7 6 18 17 16 15 14 13 12 11 10 24 23 22 21 20 19 18 17 16 15 14 13 (AH10A) AH18A (AH24A) 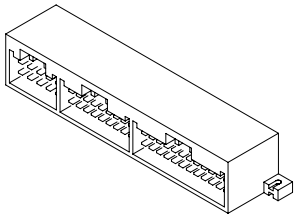
AH18B	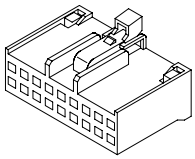 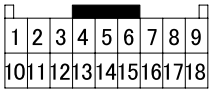 1 2 3 4 5 6 7 8 9 10 11 12 13 14 15 16 17 18	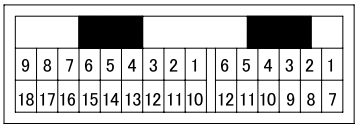 9 8 7 6 5 4 3 2 1 6 5 4 3 2 1 18 17 16 15 14 13 12 11 10 12 11 10 9 8 7 AH18B (AH12A) 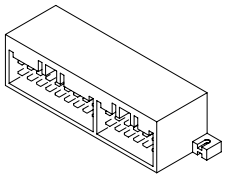
AH22A	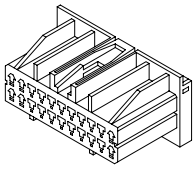 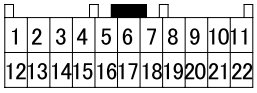 1 2 3 4 5 6 7 8 9 10 11 12 13 14 15 16 17 18 19 20 21 22	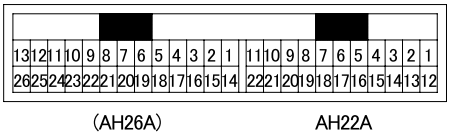 13 12 11 10 9 8 7 6 5 4 3 2 1 11 10 9 8 7 6 5 4 3 2 1 26 25 24 23 22 21 20 19 18 17 16 15 14 22 21 20 19 18 17 16 15 14 13 12 (AH26A) AH22A 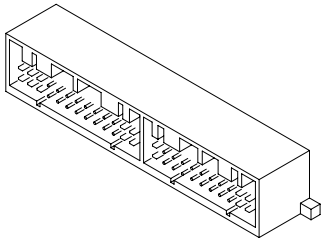
AH24A	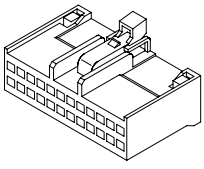 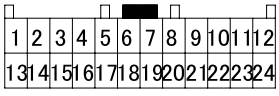 1 2 3 4 5 6 7 8 9 10 11 12 13 14 15 16 17 18 19 20 21 22 23 24	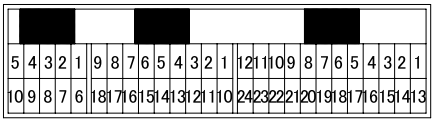 5 4 3 2 1 9 8 7 6 5 4 3 2 1 12 11 10 9 8 7 6 5 4 3 2 1 10 9 8 7 6 18 17 16 15 14 13 12 11 10 24 23 22 21 20 19 18 17 16 15 14 13 (AH10A) (AH18A) AH24A 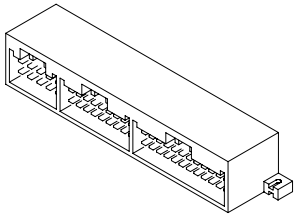

Number shows number of pins	Female connector	Male connector
AH26A	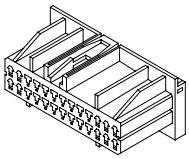 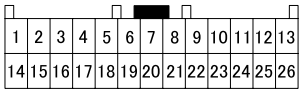 1 2 3 4 5 6 7 8 9 10 11 12 13 14 15 16 17 18 19 20 21 22 23 24 25 26	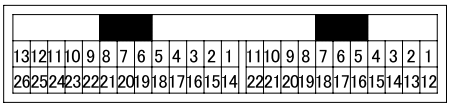 13 12 11 10 9 8 7 6 5 4 3 2 1 11 10 9 8 7 6 5 4 3 2 1 26 25 24 23 22 21 20 19 18 17 16 15 14 22 21 20 19 18 17 16 15 14 13 12 AH26A (AH22A) 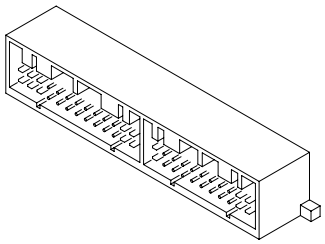

AJ type

Number shows number of pins	Female connector	Male connector
AJ2A	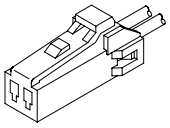 1 2	 2 1 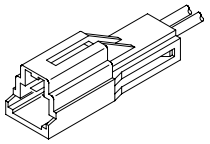
AJ4A	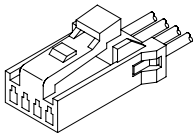 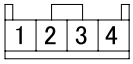 1 2 3 4	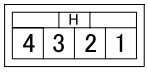 H 4 3 2 1 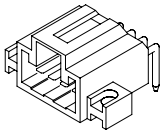
AJ8A	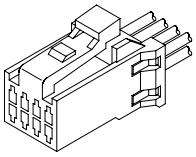 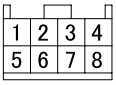 1 2 3 4 5 6 7 8	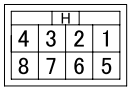 H 4 3 2 1 8 7 6 5 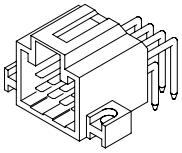
AJ10A	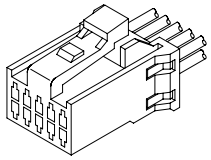 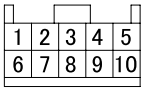 1 2 3 4 5 6 7 8 9 10	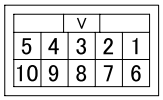 V 5 4 3 2 1 10 9 8 7 6 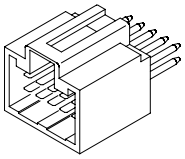 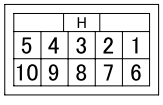 H 5 4 3 2 1 10 9 8 7 6 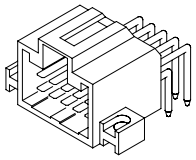

CONNECTOR CONFIGURATION CHART

Number shows number of pins	Female connector	Male connector
AJ12A	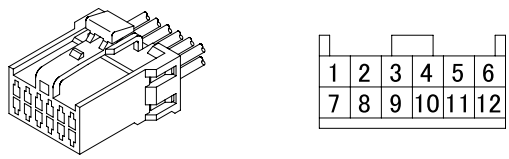	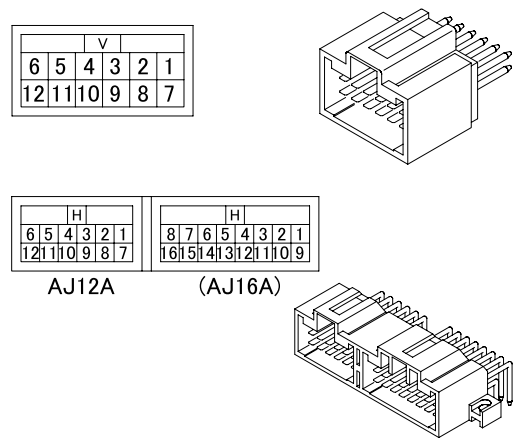
AJ16A	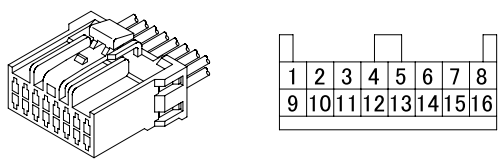	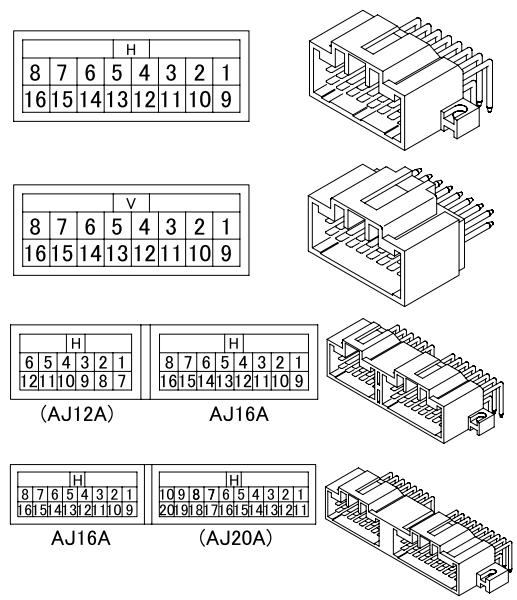
AJ20A	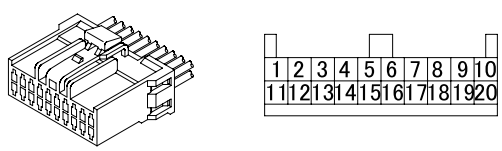	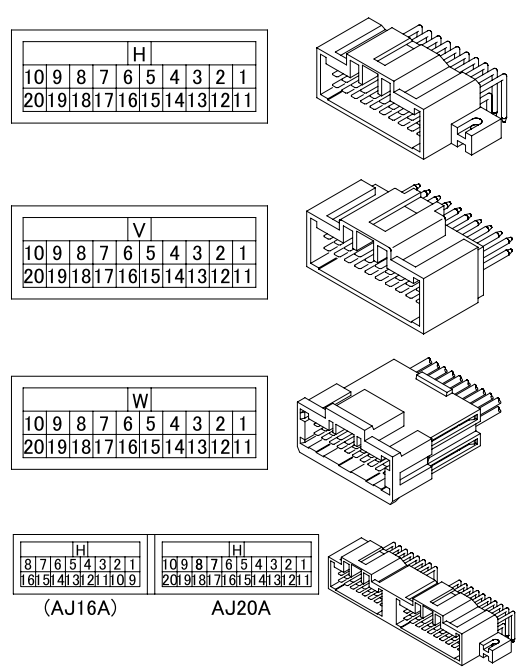

AK type

Number shows number of pins	Female connector	Male connector
AK2A	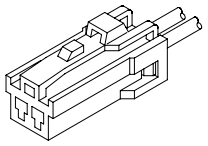	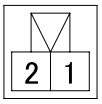 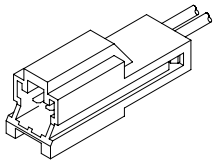
AK3A	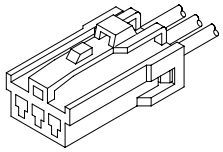 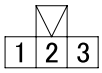	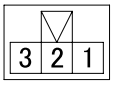 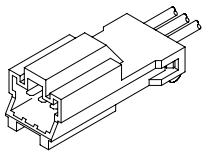
AK4A	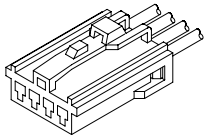 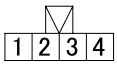	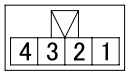 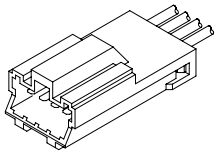
AK6A	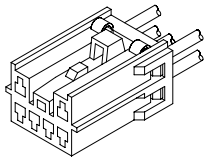 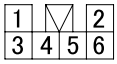	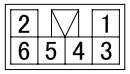 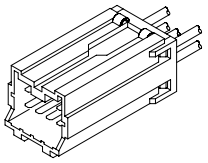
AK8A	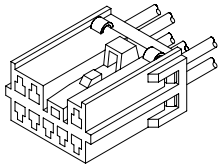 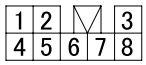	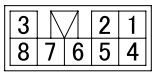 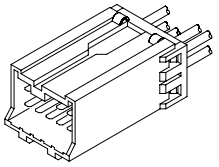
AK10A	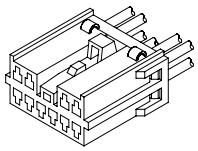 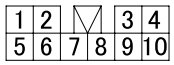	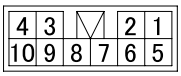 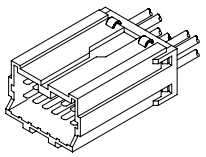 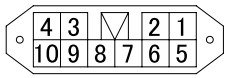 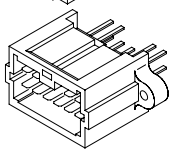
AK12A	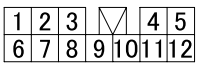	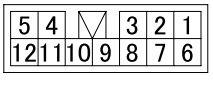

CONNECTOR CONFIGURATION CHART

Number shows number of pins	Female connector	Male connector
AK14A	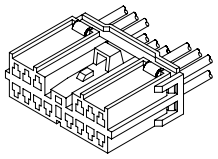 1 2 3 ▽ 4 5 6 7 8 9 10 11 12 13 14	6 5 4 ▽ 3 2 1 14 13 12 11 10 9 8 7 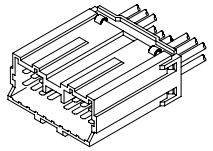 6 5 4 ▽ 3 2 1 14 13 12 11 10 9 8 7 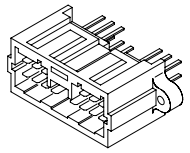
AK18A	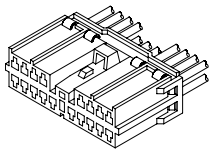 1 2 3 4 ▽ 5 6 7 8 9 10 11 12 13 14 15 16 17 18	8 7 6 5 ▽ 4 3 2 1 18 17 16 15 14 13 12 11 10 9 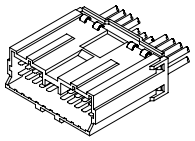 8 7 6 5 ▽ 4 3 2 1 18 17 16 15 14 13 12 11 10 9 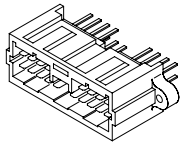
AK20A	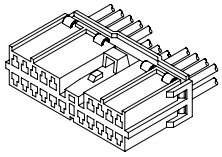 1 2 3 4 5 ▽ 6 7 8 9 10 11 12 13 14 15 16 17 18 19 20	9 8 7 6 ▽ 5 4 3 2 1 20 19 18 17 16 15 14 13 12 11 10 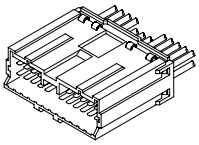 9 8 7 6 ▽ 5 4 3 2 1 20 19 18 17 16 15 14 13 12 11 10 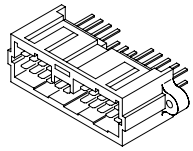
AK20B	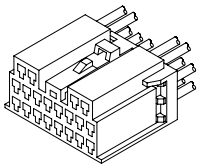 1 2 ▽ 3 4 5 6 7 8 9 10 11 12 13 14 15 16 17 18 19 20	4 3 ▽ 2 1 12 11 10 9 8 7 6 5 20 19 18 17 16 15 14 13 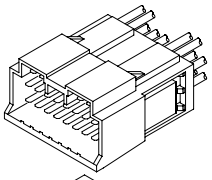 4 3 ▽ 2 1 12 11 10 9 8 7 6 5 20 19 18 17 16 15 14 13 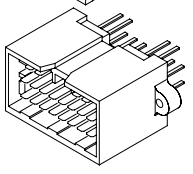
AK22A	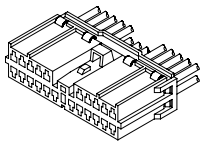 1 2 3 4 5 ▽ 6 7 8 9 10 11 12 13 14 15 16 17 18 19 20 21 22	10 9 8 7 6 ▽ 5 4 3 2 1 22 21 20 19 18 17 16 15 14 13 12 11 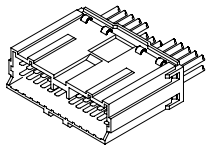 10 9 8 7 6 ▽ 5 4 3 2 1 22 21 20 19 18 17 16 15 14 13 12 11 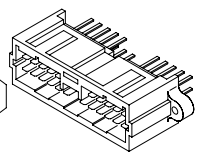

Number shows number of pins	Female connector	Male connector
AK22B	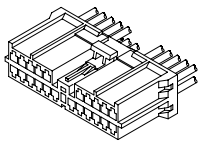 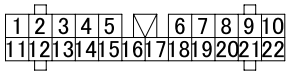	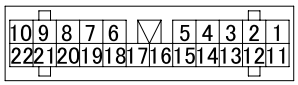 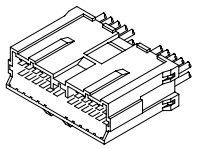

AL type

Number shows number of pins	Female connector	Male connector
AL1A	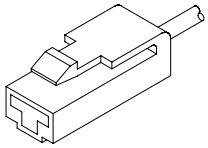 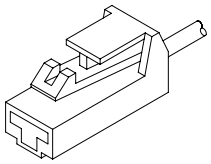	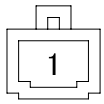 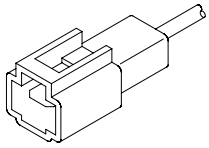 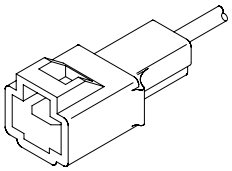
AL2A	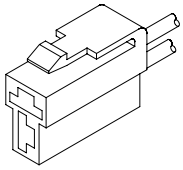 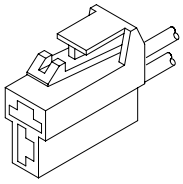	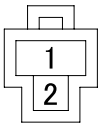 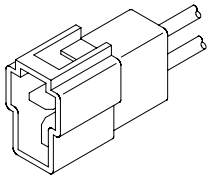 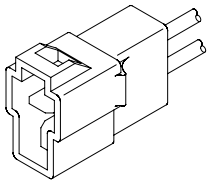
AL2B	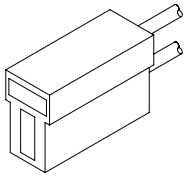	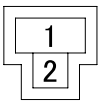 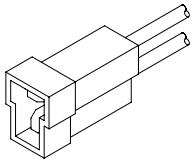
AL3A	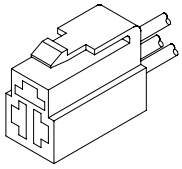 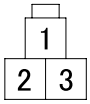 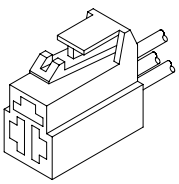	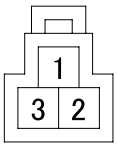 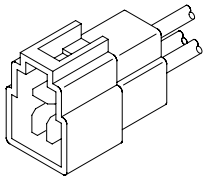 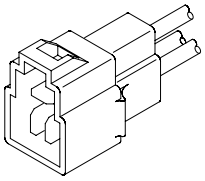

CONNECTOR CONFIGURATION CHART

Number shows number of pins	Female connector	Male connector
AL3B	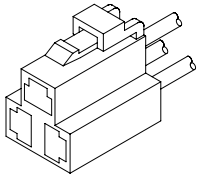	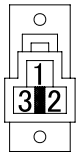 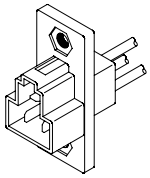
AL3C	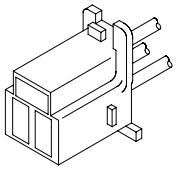	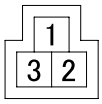 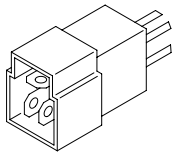
AL3D	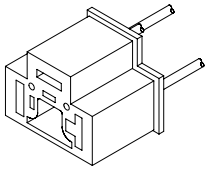 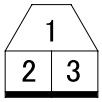 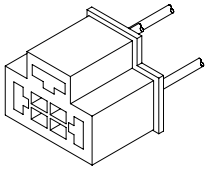	
AL3E	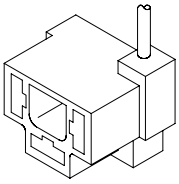 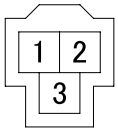 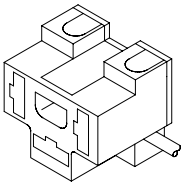	
AL4A	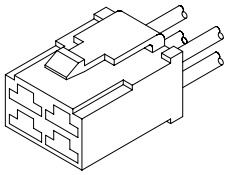 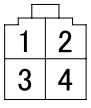 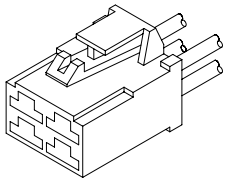	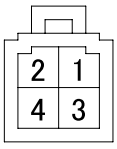 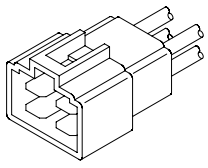 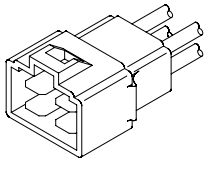

Number shows number of pins	Female connector	Male connector
AL4B	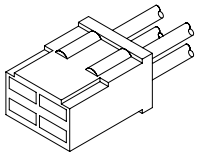	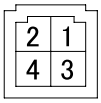 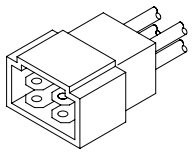
AL6A	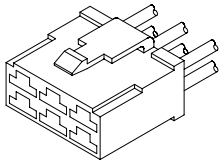 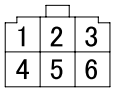 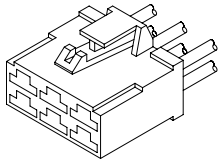	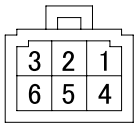 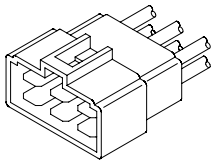 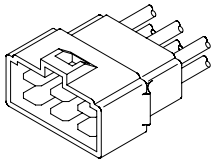
AL6B	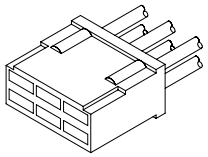 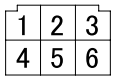	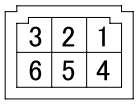 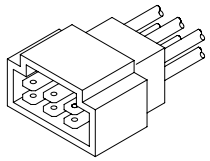
AL8A	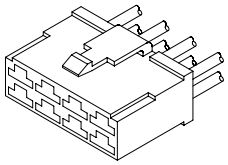 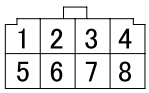 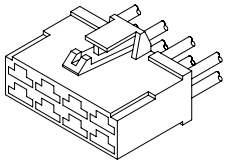	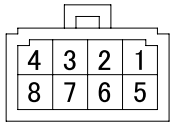 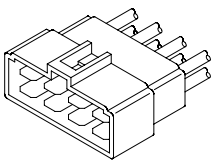 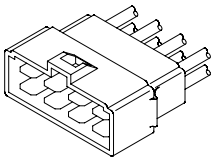
AL8B	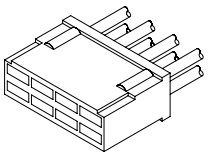 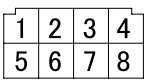	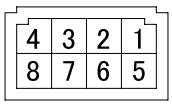 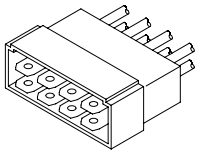

CONNECTOR CONFIGURATION CHART

AM type

Number shows number of pins	Female connector	Male connector
AM1A	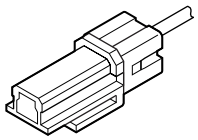	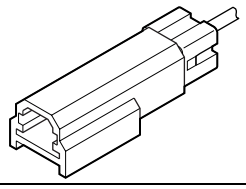
AM1B	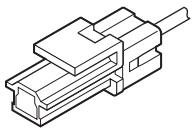	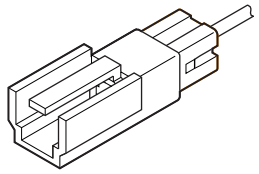
AM2A	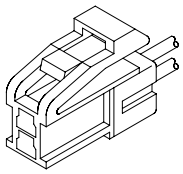 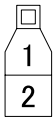	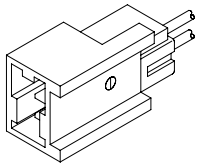
AM2B	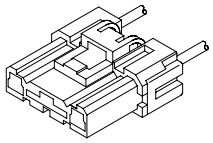	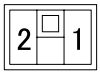 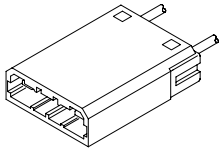
AM2C	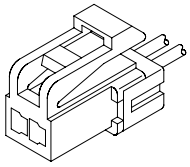	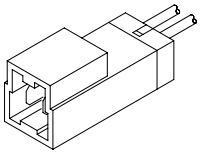
AM4A	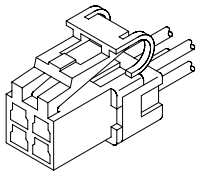 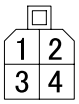	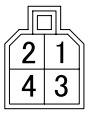 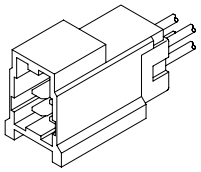
AM4B	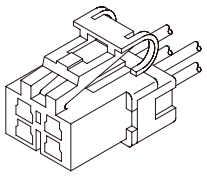 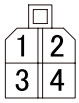	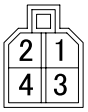 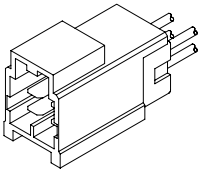
AM6A	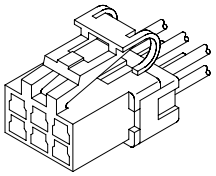 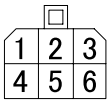	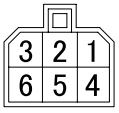 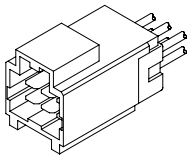
AM6B	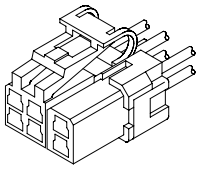 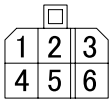	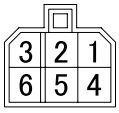 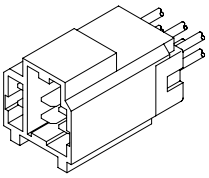

Number shows number of pins	Female connector	Male connector
AM8A	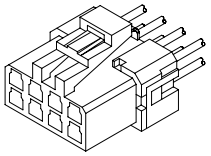 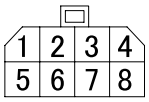	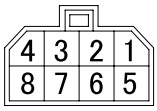 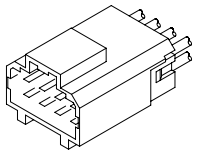
AM8B	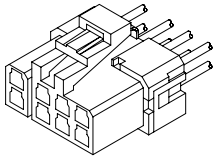 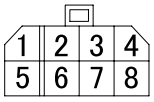	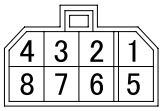 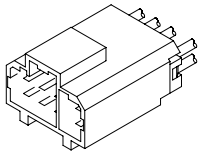
AM10A	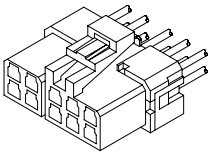 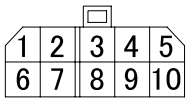	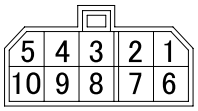 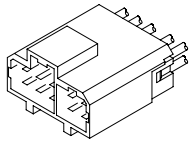
AM10B	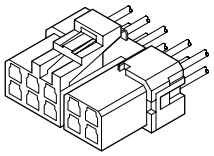 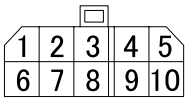	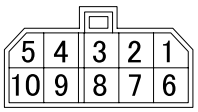 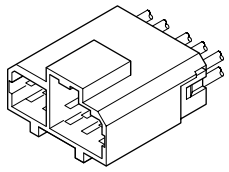

AN type

Number shows number of pins	Female connector	Male connector
AN1A	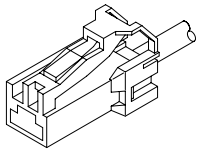	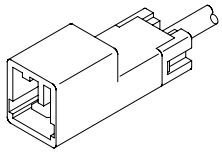
AN2A	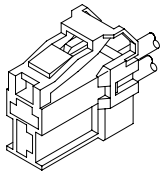	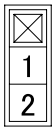 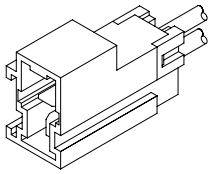
AN2B	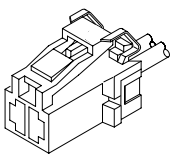	
AN3A	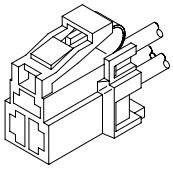 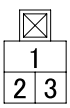	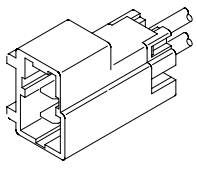

CONNECTOR CONFIGURATION CHART

Number shows number of pins	Female connector	Male connector
AN4A	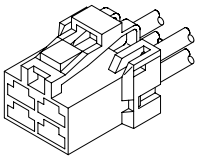 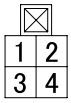	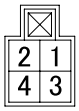 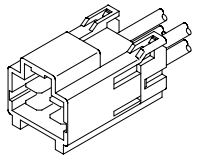
AN4B	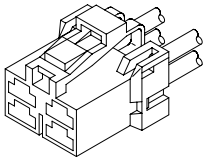 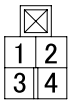	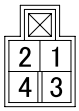 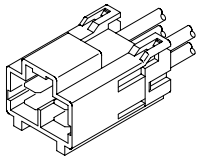
AN6A	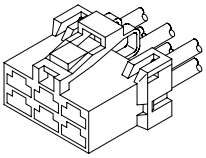 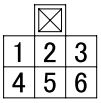	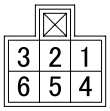 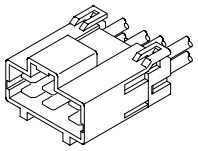
AN6B	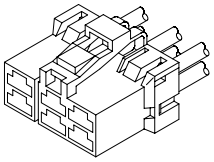 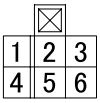	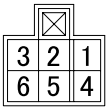 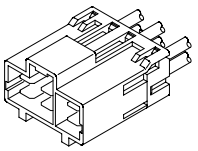
AN8A	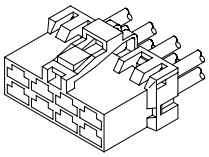 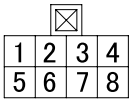	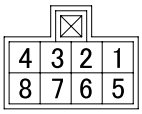 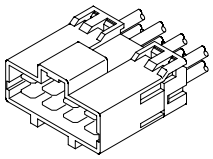
AN8B	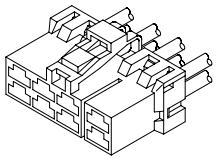 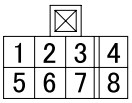	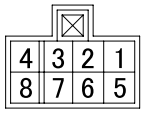 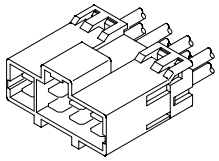

AP type

Number shows number of pins	Female connector	Male connector
AP1A	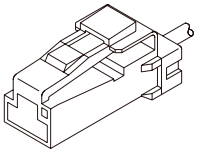 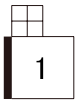	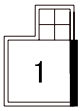 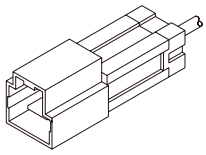
AP1B	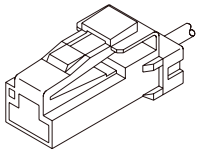 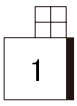	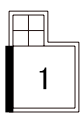 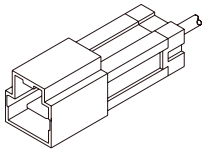

Number shows number of pins	Female connector	Male connector
AP2A	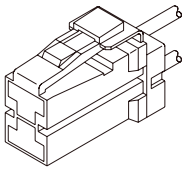	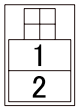 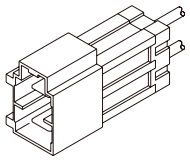
AP2B	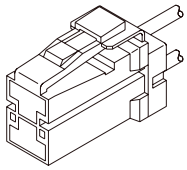 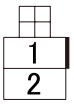	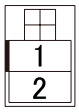 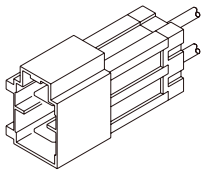
AP2C	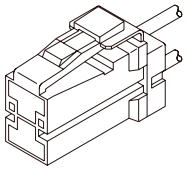 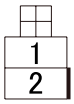	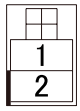 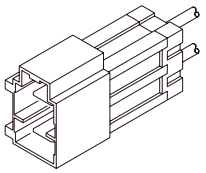

AQ type

Number shows number of pins	Female connector	Male connector
AQ1A		
AQ3A	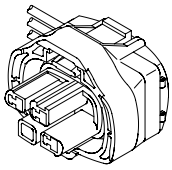 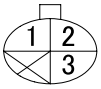	
AQ3B	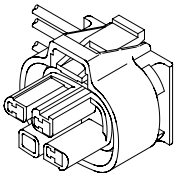 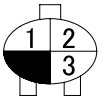	
AQ5A	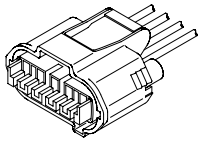 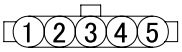	
AQ6A	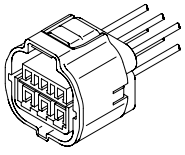 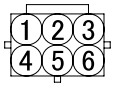	

CONNECTOR CONFIGURATION CHART

Number shows number of pins	Female connector	Male connector
AQ8A	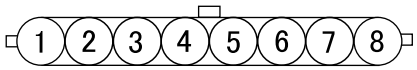	
AQ12A	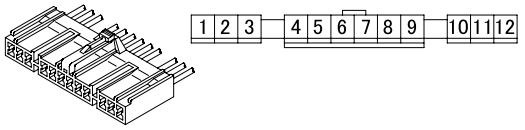	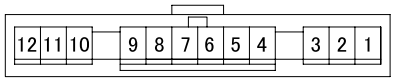

AR type

Number shows number of pins	Female connector	Male connector
AR2A		
AR2B	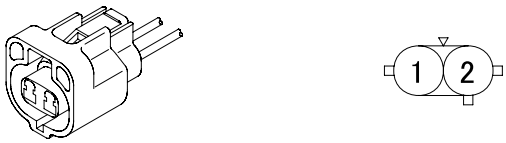	
AR2C	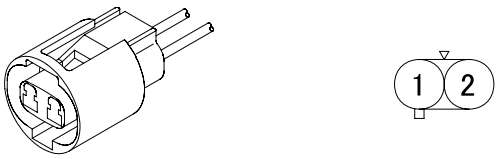	
AR2D	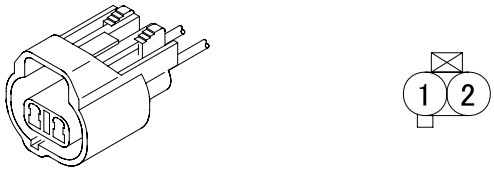	
AR2E	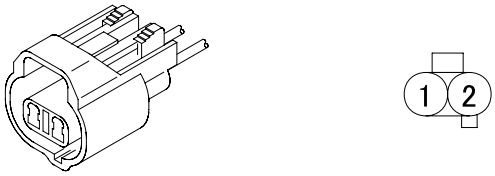	
AR2F	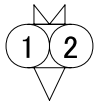	

Number shows number of pins	Female connector	Male connector
AR2G	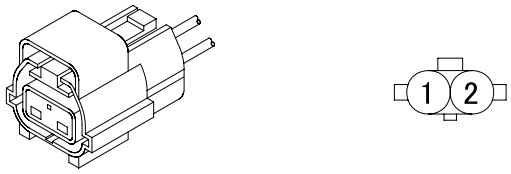	
AR2H	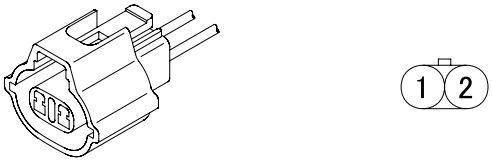	
AR3A	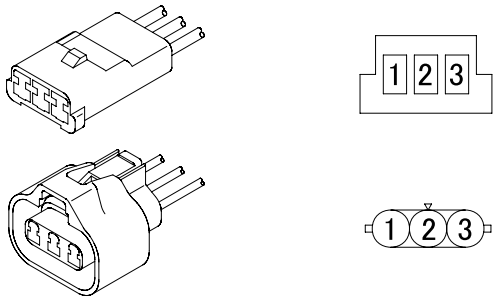	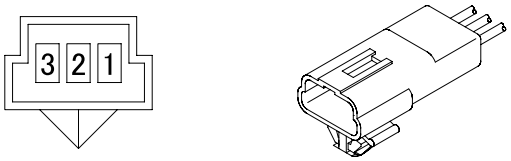

AS type

Number shows number of pins	Female connector	Male connector
AS1A	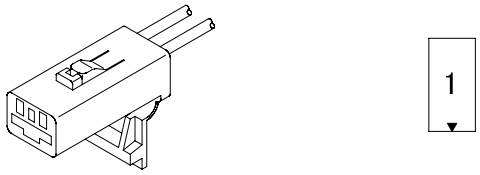	
AS2A	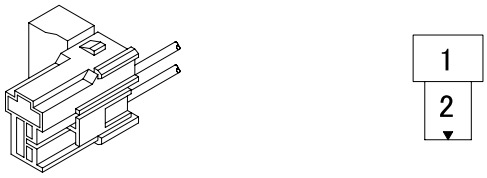	
AS2B	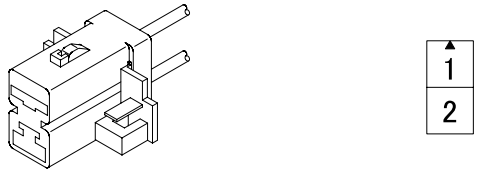	

AT type

Number shows number of pins	Female connector	Male connector
AT4A	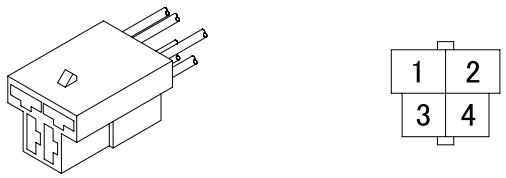	

CONNECTOR CONFIGURATION CHART

AU type

Number shows number of pins	Female connector	Male connector
AU2A		
AU6A	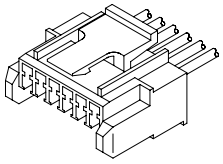 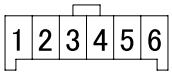	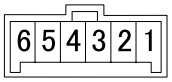
AU8A	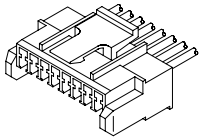 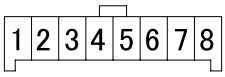	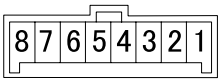
AU10A	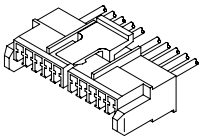 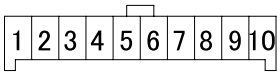	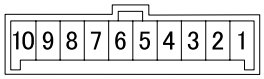
AU12A	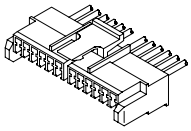 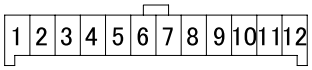	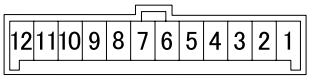
AU13A	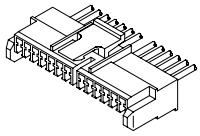 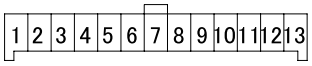	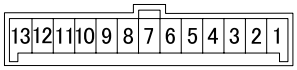
AU16A	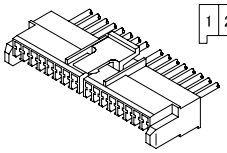 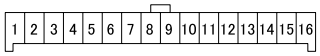	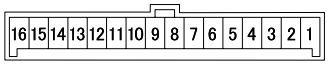
AU16B	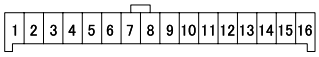	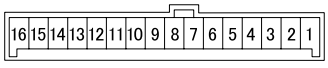
AU16C	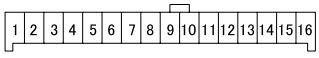	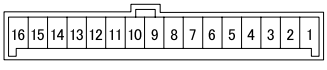

AV type

Number shows number of pins	Female connector	Male connector
AV1A	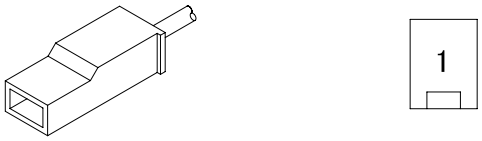	
AV2A		

AW type

Number shows number of pins	Female connector	Male connector
AW1A	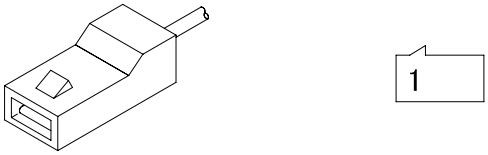	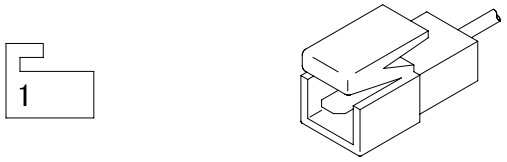
AW1B	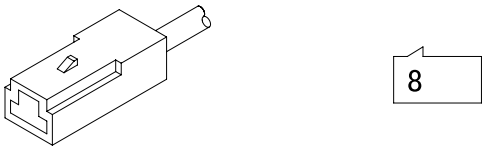	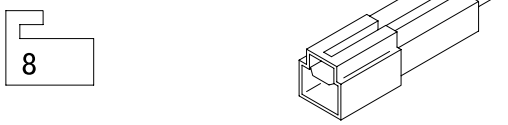
AW1C	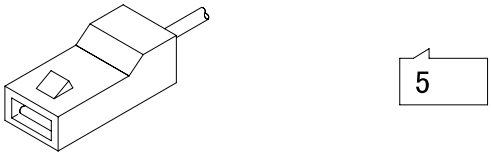	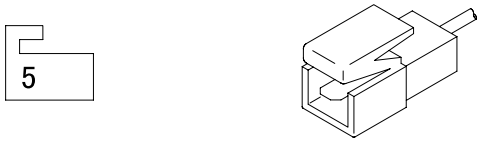
AW2A	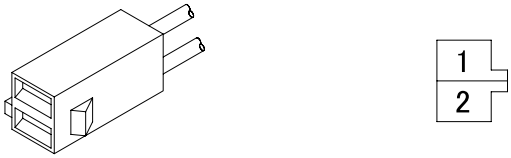	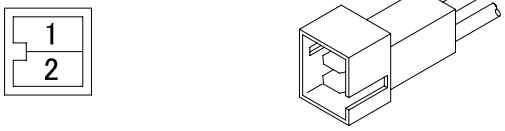

AX type

Number shows number of pins	Female connector	Male connector
AX2A	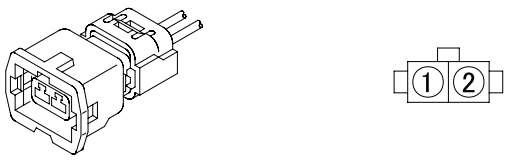	

CONNECTOR CONFIGURATION CHART

Number shows number of pins	Female connector	Male connector
AX3A	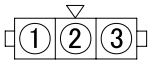	
AX4A	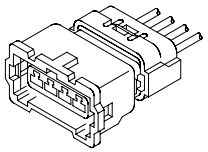 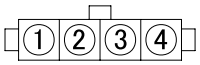	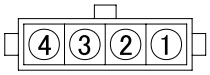 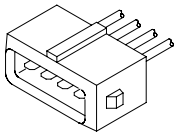

AY type

Number shows number of pins	Female connector	Male connector
AY2A	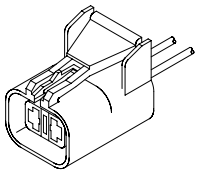 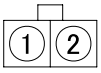	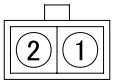 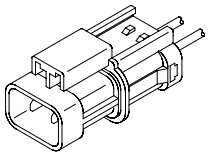

AZ type

Number shows number of pins	Female connector	Male connector
AZ2A	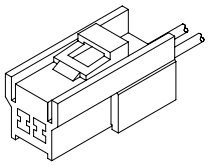 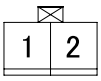	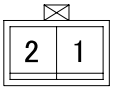 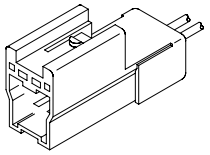

BA type

Number shows number of pins	Female connector	Male connector
BA3A	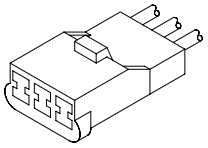 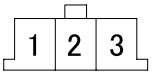	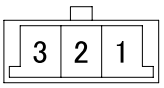 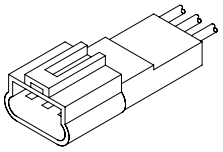

BB type

Number shows number of pins	Female connector	Male connector
BB2A	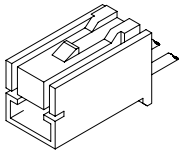	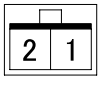

Number shows number of pins	Female connector	Male connector
BB3A	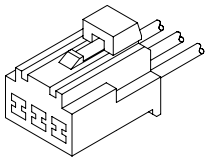 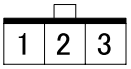	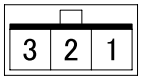 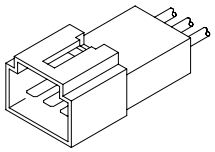

BC type

Number shows number of pins	Female connector	Male connector
BC3A	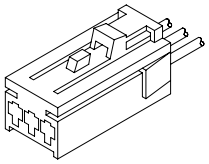 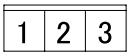	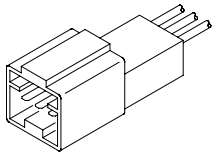

BD type

Number shows number of pins	Female connector	Male connector
BD6A	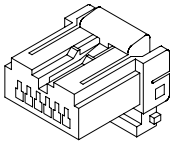	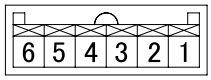 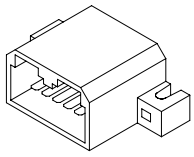
BD8A	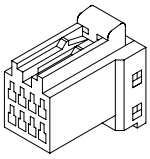 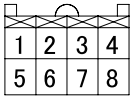	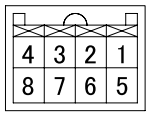 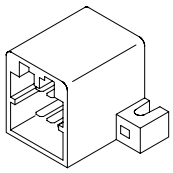
BD12A	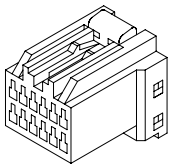 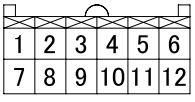	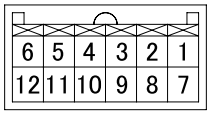 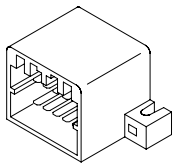
BD16A	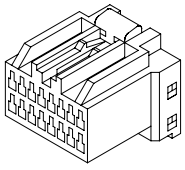 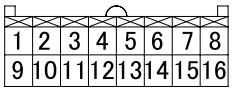	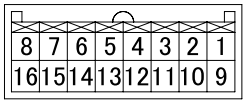 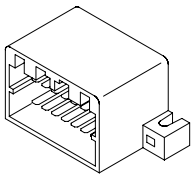
BD20A	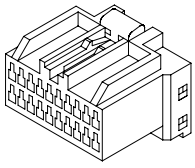 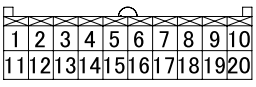	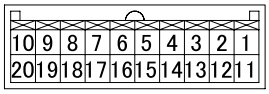 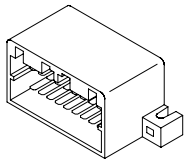

CONNECTOR CONFIGURATION CHART

BE type

Number shows number of pins	Female connector	Male connector
BE6A	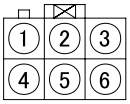	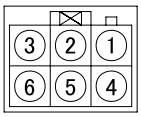

BF type

Number shows number of pins	Female connector	Male connector
BF6A	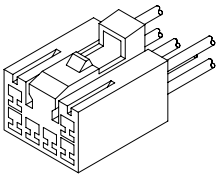 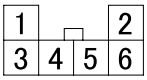	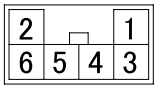 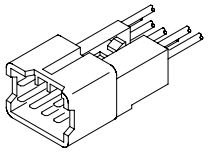
BF8A	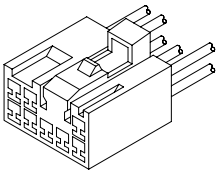 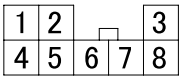	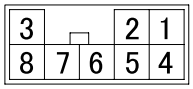 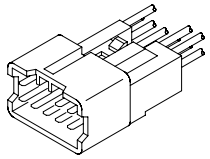
BF10A	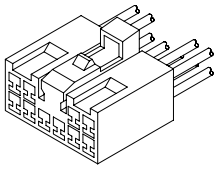 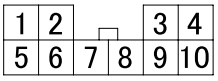	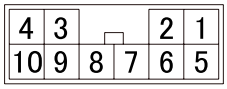 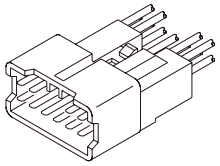
BF12A	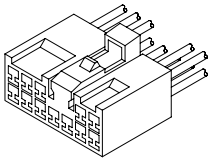 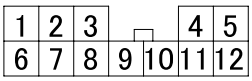	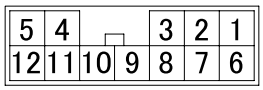 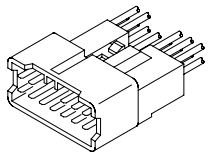

BG type

Number shows number of pins	Female connector	Male connector
BG10A	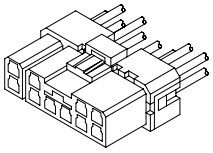 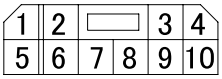	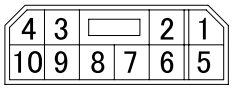 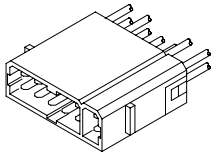
BG12A	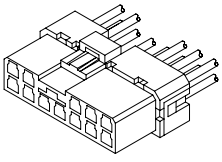 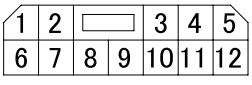	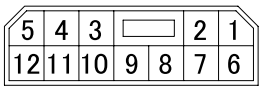 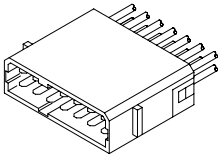

Number shows number of pins	Female connector	Male connector
BG16A	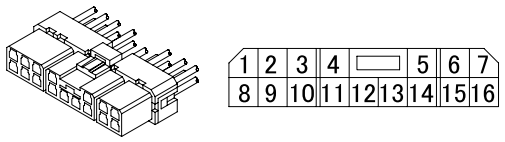	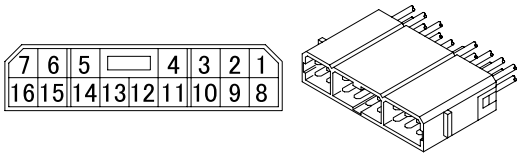

BJ type

Number shows number of pins	Female connector	Male connector
BJ5A	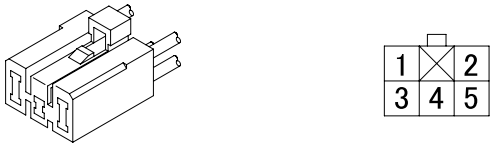	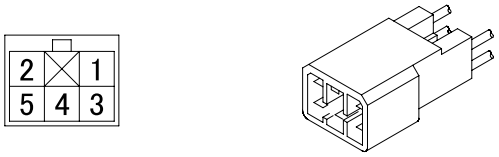
BJ7A	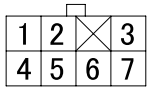	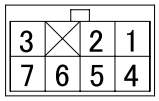
BJ9A	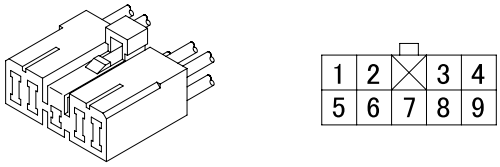	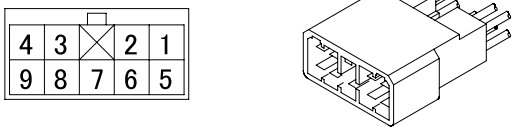

BM type

Number shows number of pins	Female connector	Male connector
BM2A	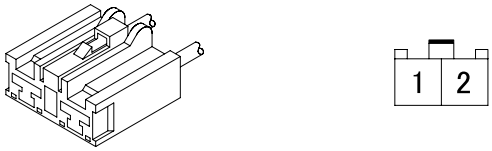	
BM2B	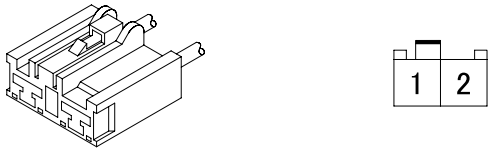	
BM2C	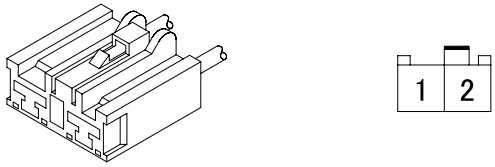	

CONNECTOR CONFIGURATION CHART

Number shows number of pins	Female connector	Male connector
BM3A	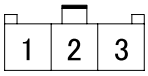	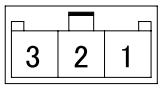
BM4A	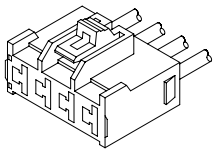 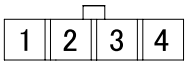	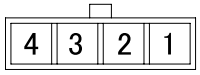 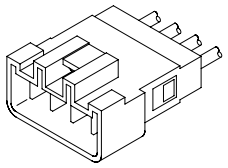

BN type

Number shows number of pins	Female connector	Male connector
BN1A	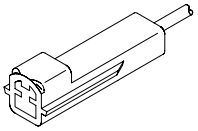	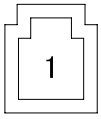 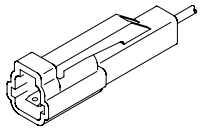

BQ type

Number shows number of pins	Female connector	Male connector
BQ1A	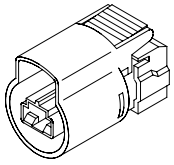	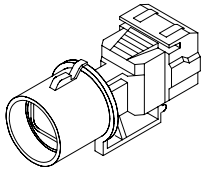
BQ2A	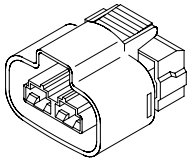 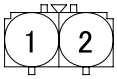	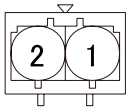 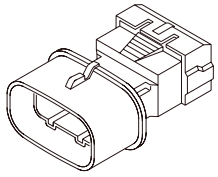
BQ3A	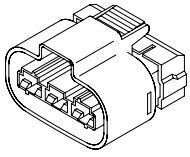 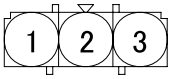	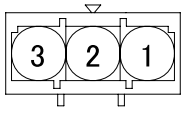 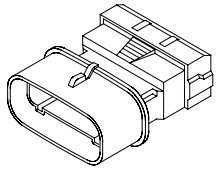
BQ3B	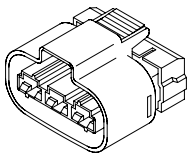 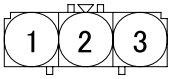	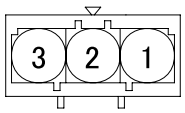 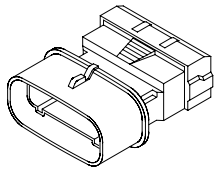

BR type

Number shows number of pins	Female connector	Male connector
BR1A	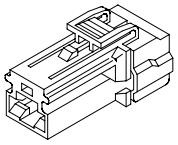	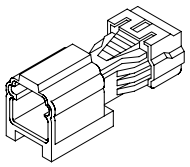
BR2A	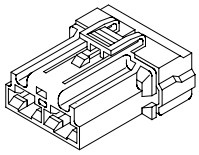 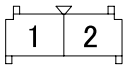	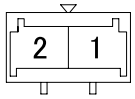 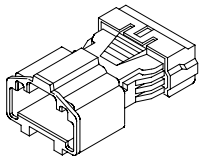
BR4A	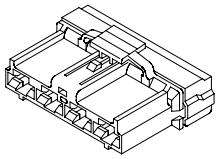 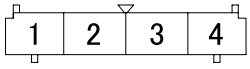	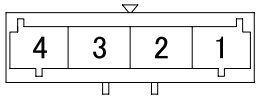 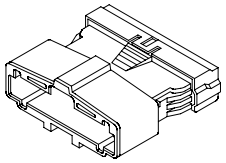
BR4B	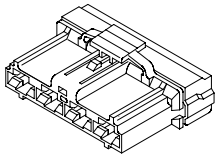 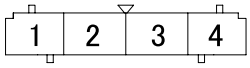	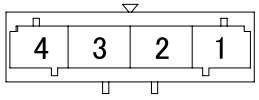 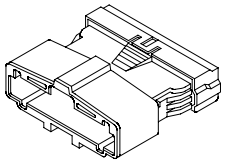

BS type

Number shows number of pins	Female connector	Male connector
BS1A	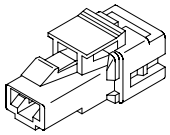	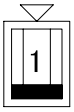 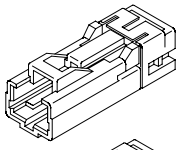 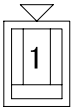 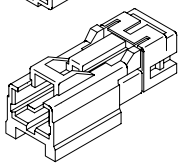
BS2A	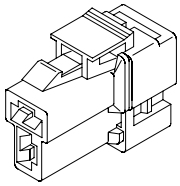 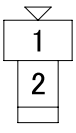	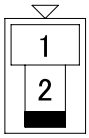 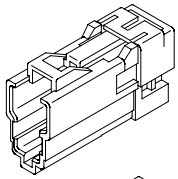 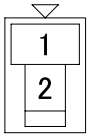 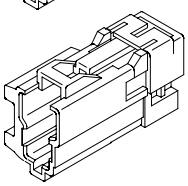

CONNECTOR CONFIGURATION CHART

Number shows number of pins	Female connector	Male connector
BS3A	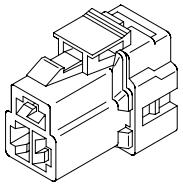 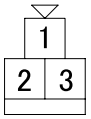	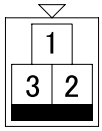 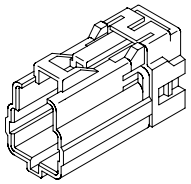 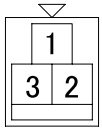 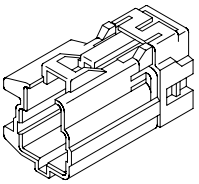
BS4A	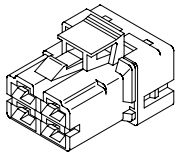 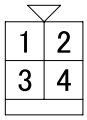	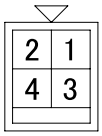 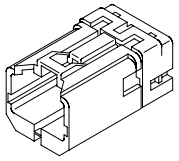
BS6A	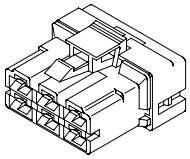 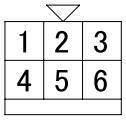	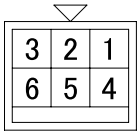 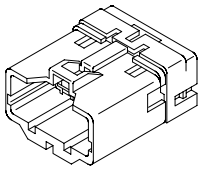
BS8A	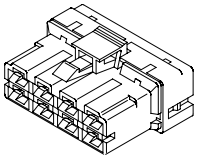 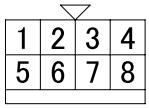	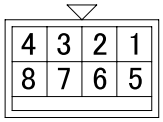 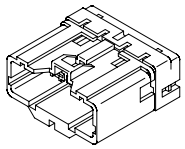

BT type

Number shows number of pins	Female connector	Male connector
BT2A	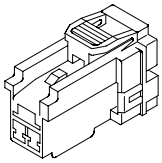	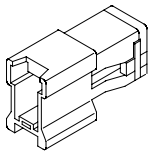
BT3A	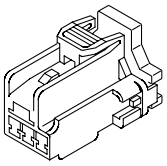 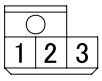	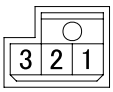 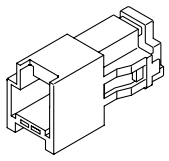
BT4A	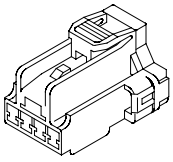 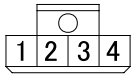	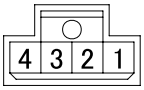 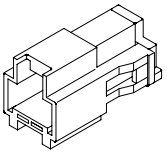

Number shows number of pins	Female connector	Male connector
BT6A	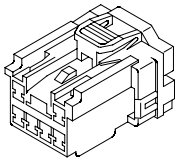 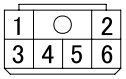	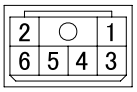 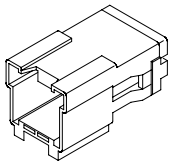
BT8A	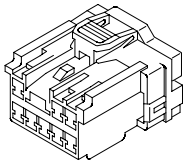 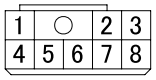	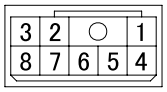 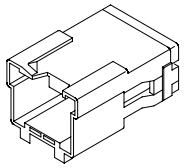
BT10A	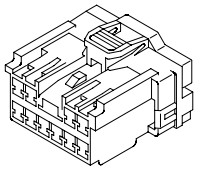 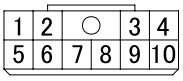	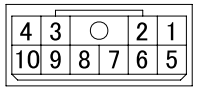 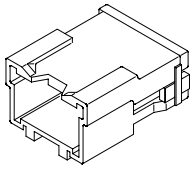
BT12A	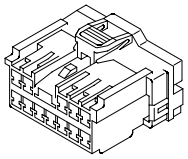 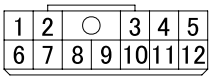	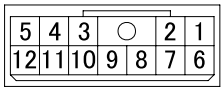 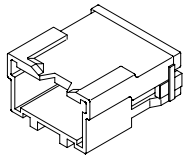
BT16A	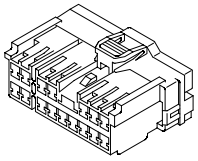 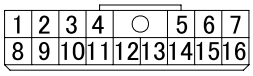	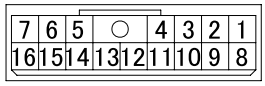 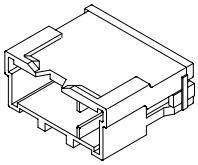
BT16B	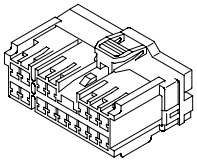 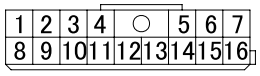	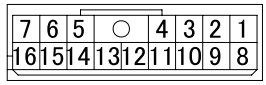 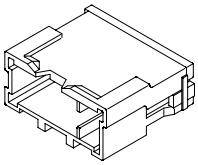
BT16C	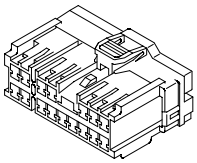 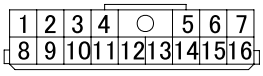	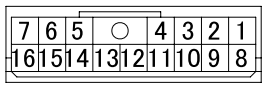 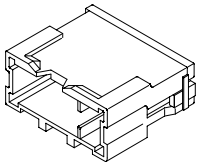
BT20A	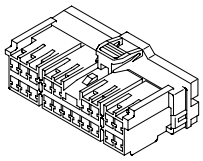 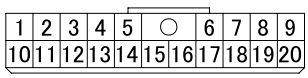	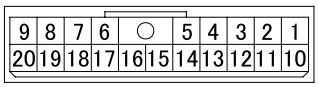 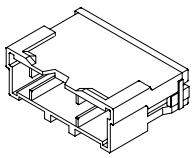
BT20B	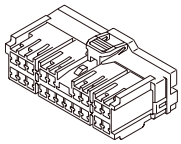 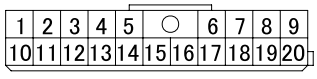	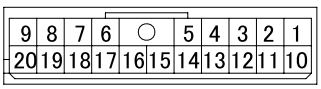 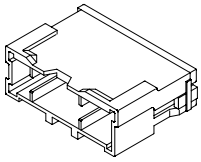

CONNECTOR CONFIGURATION CHART

Number shows number of pins	Female connector	Male connector
BT20C	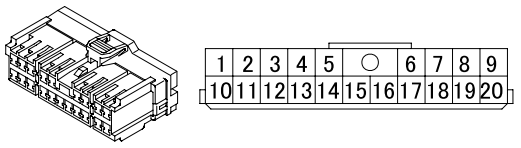	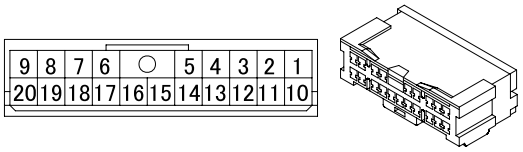

BU type

Number shows number of pins	Female connector	Male connector
BU4A		
BU6A		

BW type

Number shows number of pins	Female connector	Male connector
BW2A	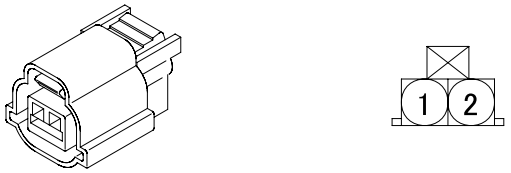	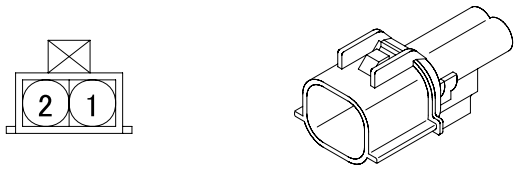
BW2B	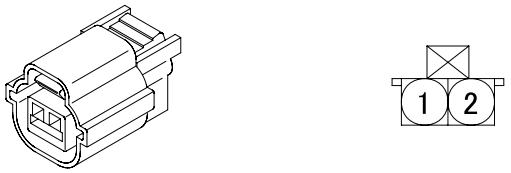	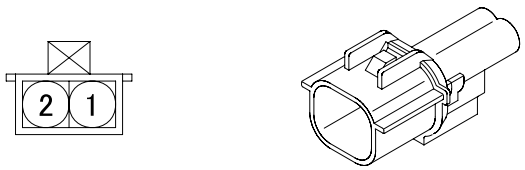
BW3A	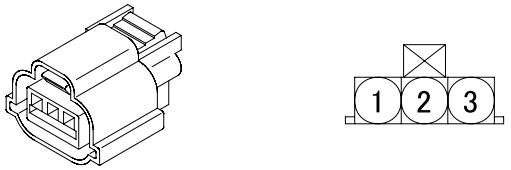	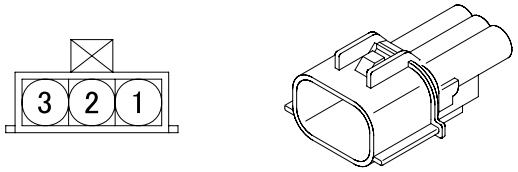
BW3B	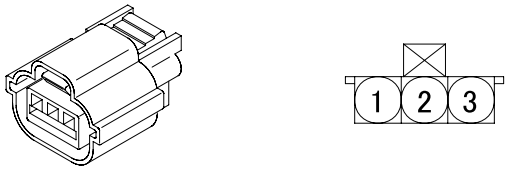	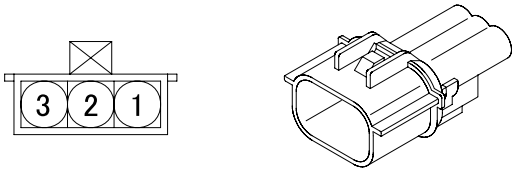

Number shows number of pins	Female connector	Male connector
BW4A	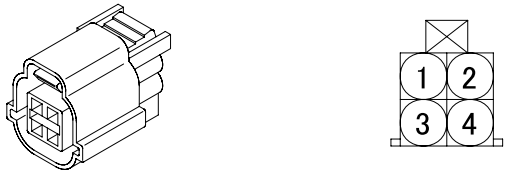	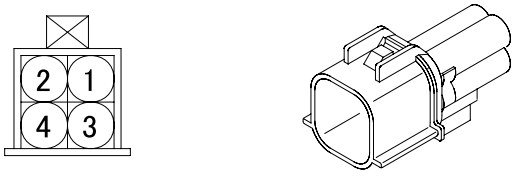
BW4B	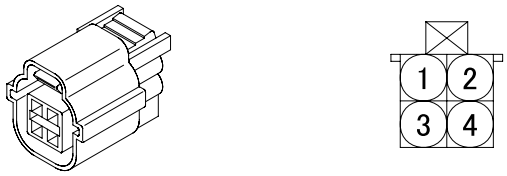	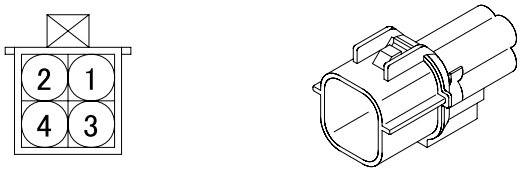
BW6A	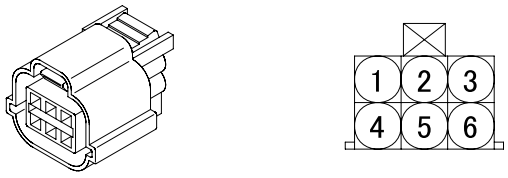	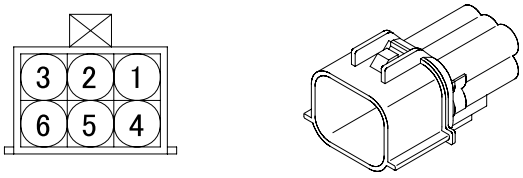
BW6B	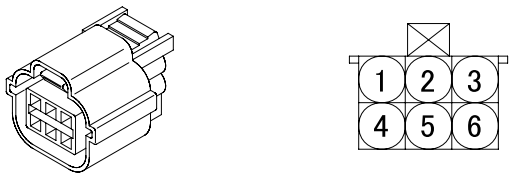	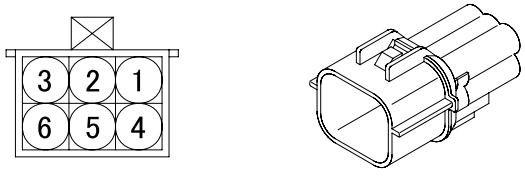
BW8A	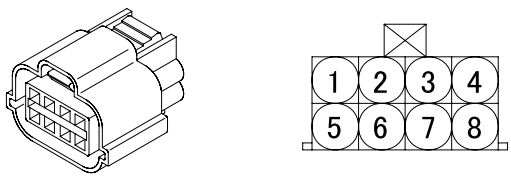	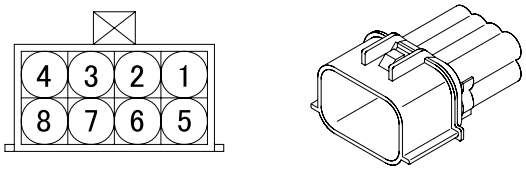
BW10A	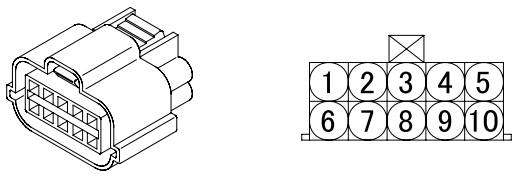	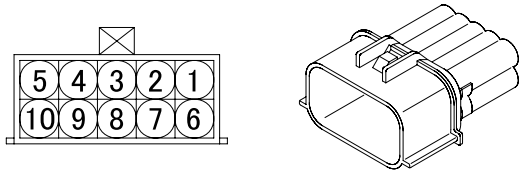

BX type

Number shows number of pins	Female connector	Male connector
BX2A	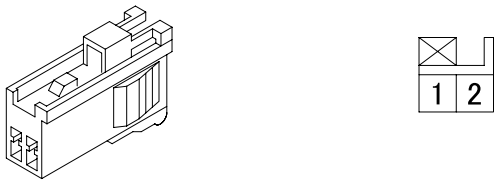	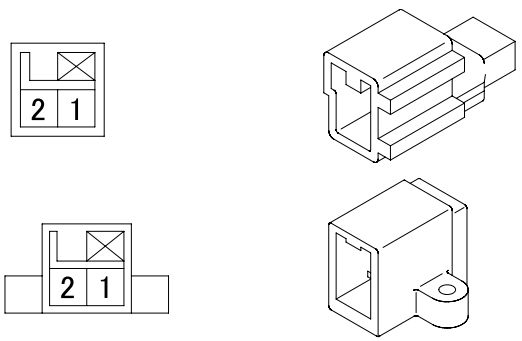

CONNECTOR CONFIGURATION CHART

Number shows number of pins	Female connector	Male connector
BX3A	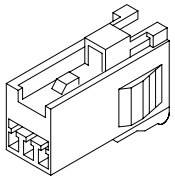 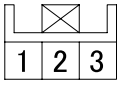	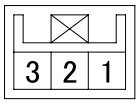 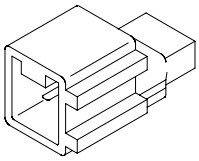 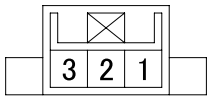 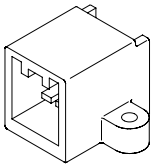
BX5A	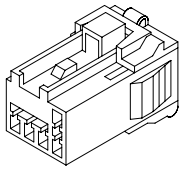 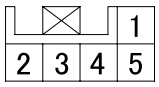	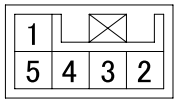 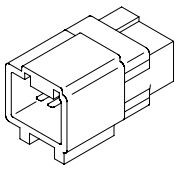 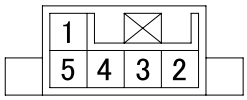 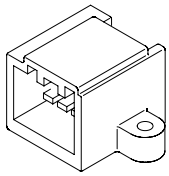
BX7A	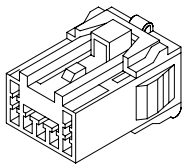 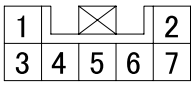	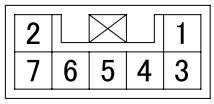 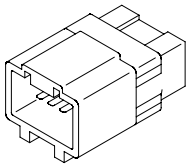 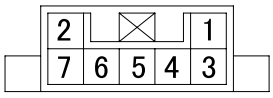 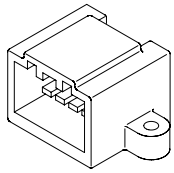
BX9A	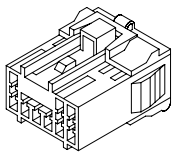 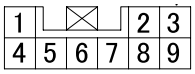	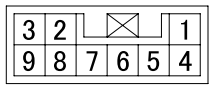 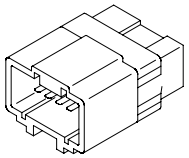 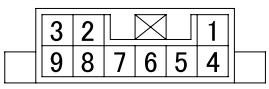 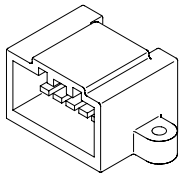

Number shows number of pins	Female connector	Male connector
BX11A	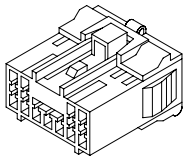 1 2 3 4 5 6 7 8 9 10 11	4 3 2 1 11 10 9 8 7 6 5 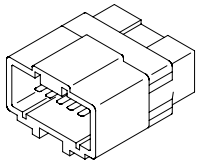 4 3 2 1 11 10 9 8 7 6 5 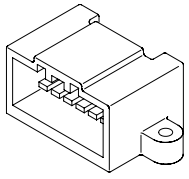
BX13A	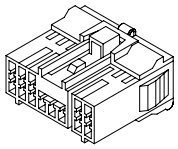 1 2 3 4 5 6 7 8 9 10 11 12 13	5 4 3 2 1 13 12 11 10 9 8 7 6 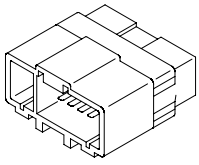 5 4 3 2 1 13 12 11 10 9 8 7 6 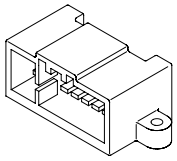
BX15A	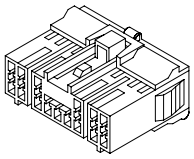 1 2 3 4 5 6 7 8 9 10 11 12 13 14 15	6 5 4 3 2 1 15 14 13 12 11 10 9 8 7 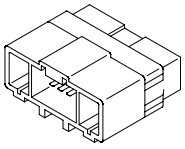 6 5 4 3 2 1 15 14 13 12 11 10 9 8 7 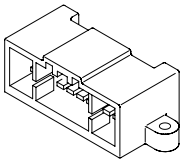
BX17A	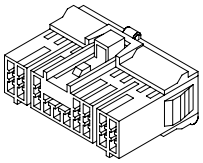 1 2 3 4 5 6 7 8 9 10 11 12 13 14 15 16 17	7 6 5 4 3 2 1 17 16 15 14 13 12 11 10 9 8 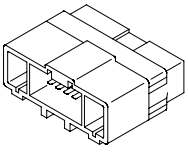 7 6 5 4 3 2 1 17 16 15 14 13 12 11 10 9 8 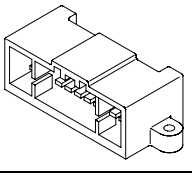

CONNECTOR CONFIGURATION CHART

Number shows number of pins	Female connector	Male connector
BX19A	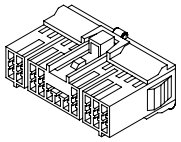 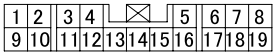	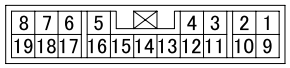 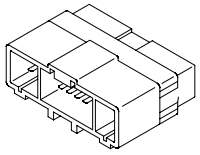 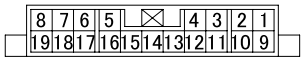 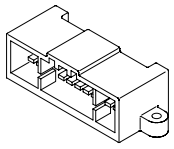

BY type

Number shows number of pins	Female connector	Male connector
BY4A	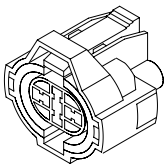 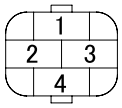	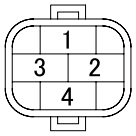

BZ type

Number shows number of pins	Female connector	Male connector
BZ12A	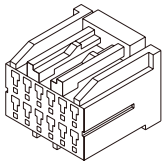 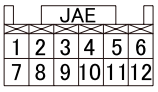	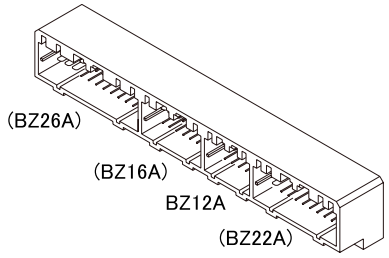
BZ16A	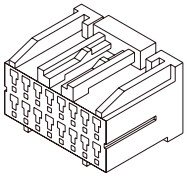 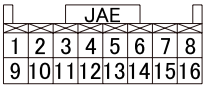	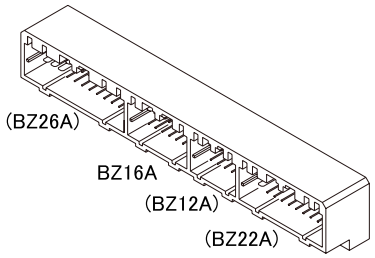
BZ22A	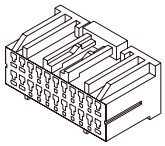 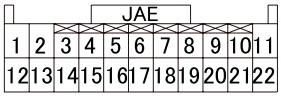	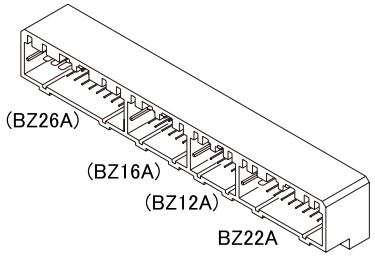

Number shows number of pins	Female connector	Male connector
BZ26A	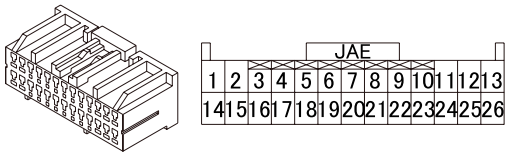	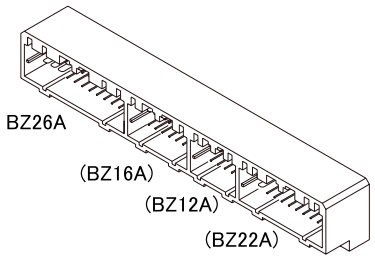

CA type

Number shows number of pins	Female connector	Male connector
CA2A		

CB type

Number shows number of pins	Female connector	Male connector
CB16A	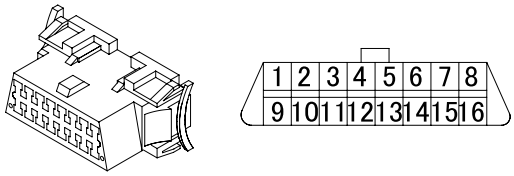	

CD type

Number shows number of pins	Female connector	Male connector
CD35A	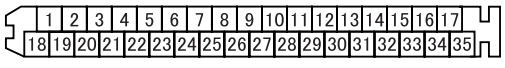	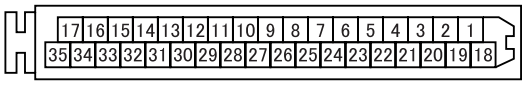
CD55A	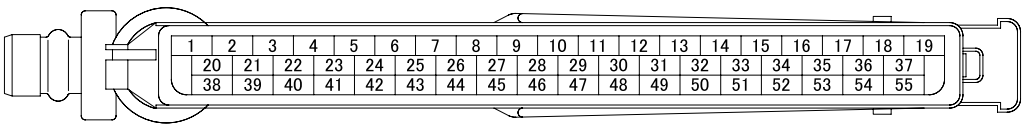	

CONNECTOR CONFIGURATION CHART

CE type

Number shows number of pins	Female connector	Male connector
CE2A		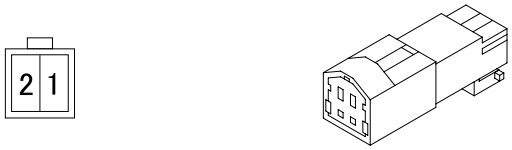
CE4A	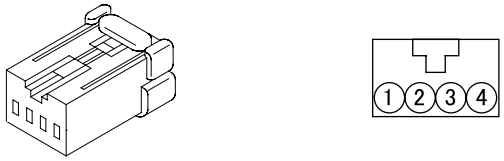	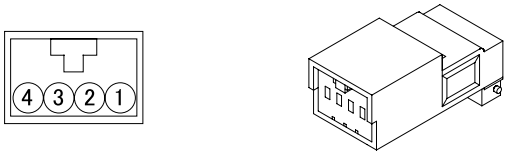
CE12A	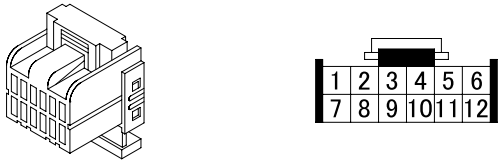	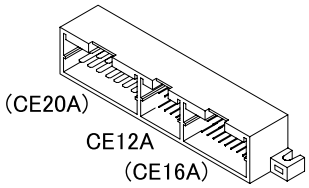
CE16A	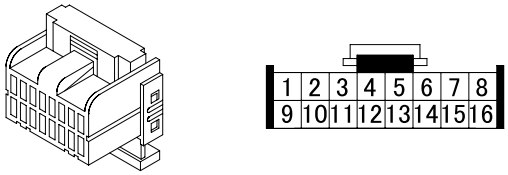	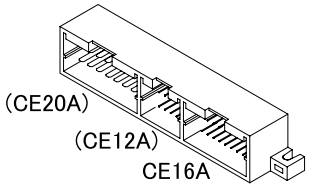
CE20A	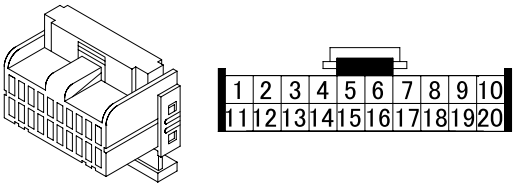	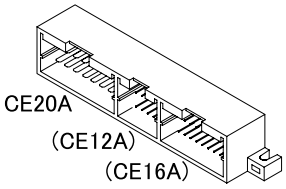

CF type

Number shows number of pins	Female connector	Male connector
CF21A	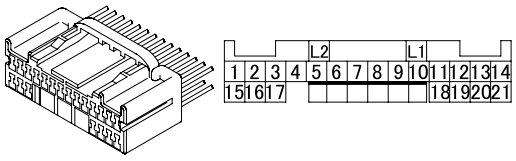	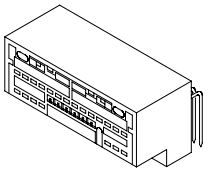

CH type

Number shows number of pins	Female connector	Male connector
CH2A	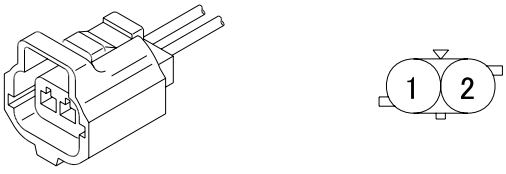	

Number shows number of pins	Female connector	Male connector
CH2B	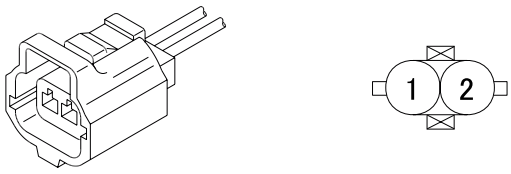	
CH3A	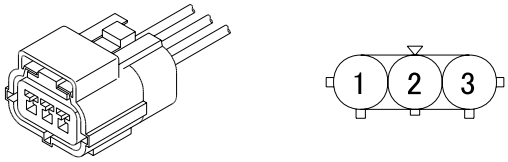	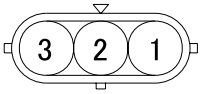

CK type

Number shows number of pins	Female connector	Male connector
CK3A		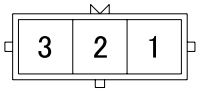

CL type

Number shows number of pins	Female connector	Male connector
CL14A	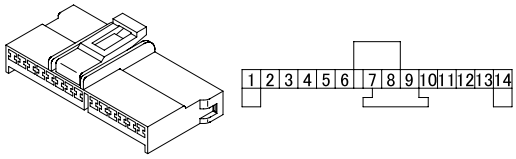	

CM type

Number shows number of pins	Female connector	Male connector
CM28A	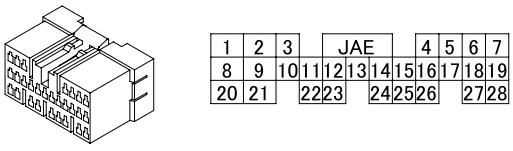	
CM30A	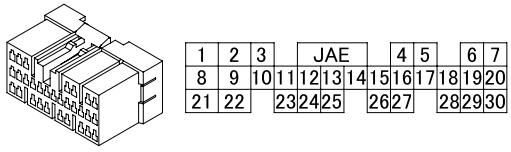	

CONNECTOR CONFIGURATION CHART

Number shows number of pins	Female connector	Male connector
CM35A	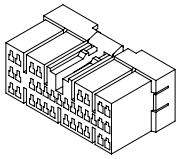 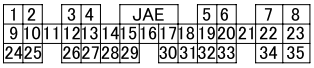	

CN type

Number shows number of pins	Female connector	Male connector
CN2A	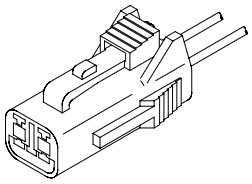	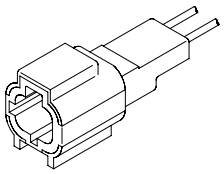
CN12A	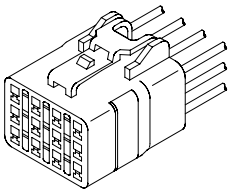 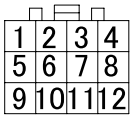	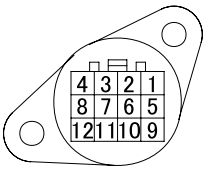 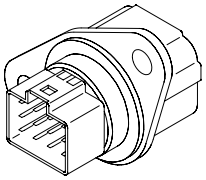
CN16A	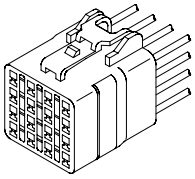 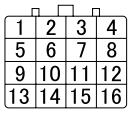	

CP type

Number shows number of pins	Female connector	Male connector
CP40A	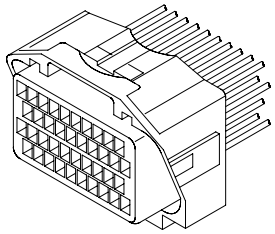 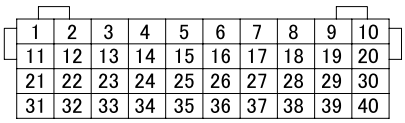	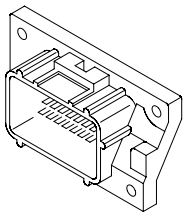 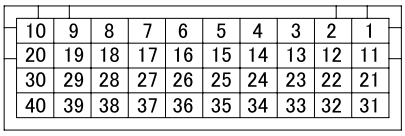

Number shows number of pins	Female connector	Male connector
CP40B	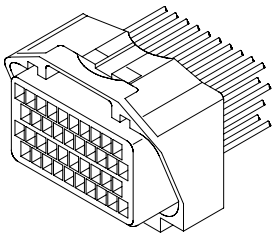 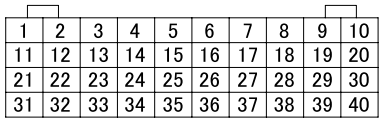 1 2 3 4 5 6 7 8 9 10 11 12 13 14 15 16 17 18 19 20 21 22 23 24 25 26 27 28 29 30 31 32 33 34 35 36 37 38 39 40	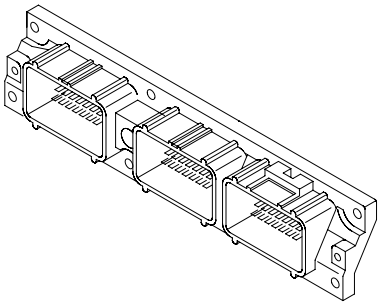 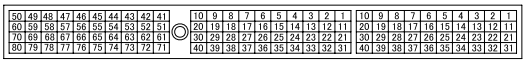 (CP80A) CP40B
CP80A	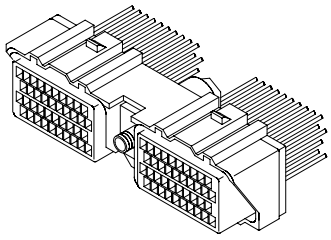 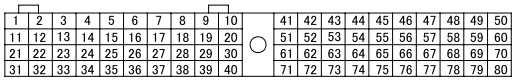 1 2 3 4 5 6 7 8 9 10 / 41 42 43 44 45 46 47 48 49 50 11 12 13 14 15 16 17 18 19 20 / 51 52 53 54 55 56 57 58 59 60 21 22 23 24 25 26 27 28 29 30 / 61 62 63 64 65 66 67 68 69 70 31 32 33 34 35 36 37 38 39 40 / 71 72 73 74 75 76 77 78 79 80	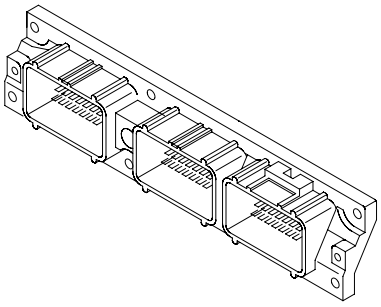 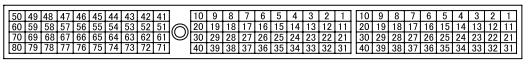 CP80A (CP40B)

CQ type

Number shows number of pins	Female connector	Male connector
CQ2B	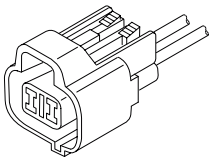 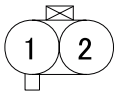 1 2	
CQ3A	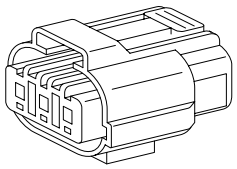	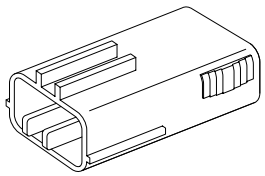
CQ8A	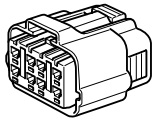 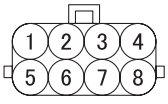 1 2 3 4 5 6 7 8	

CONNECTOR CONFIGURATION CHART

CR type

Number shows number of pins	Female connector	Male connector
CR16A		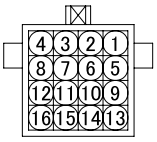

CS type

Number shows number of pins	Female connector	Male connector
CS2A	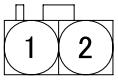	

CT type

Number shows number of pins	Female connector	Male connector
CT3A	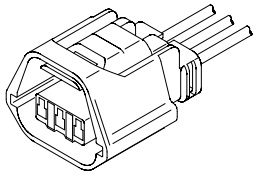 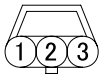	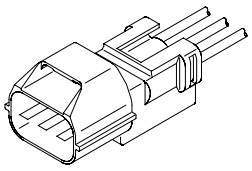
CT3B	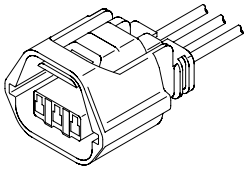 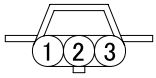	
CT10A	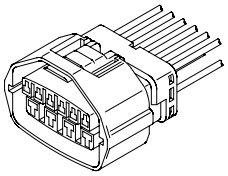 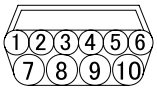	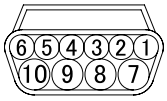 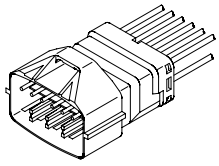

CU type

Number shows number of pins	Female connector	Male connector
CU6A	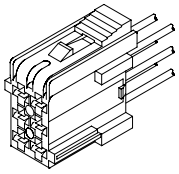 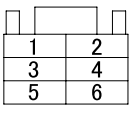	

Number shows number of pins	Female connector	Male connector
CU9A	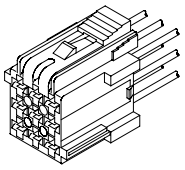 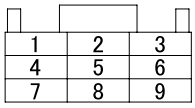	
CU12A	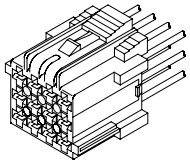 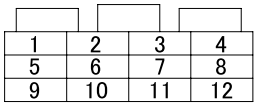	
CU15A	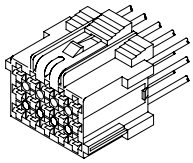 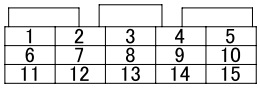	
CU17A	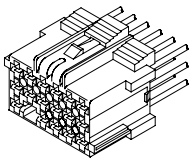 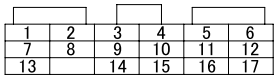	
CU18A	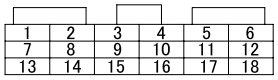	

CV type

Number shows number of pins	Female connector	Male connector
CV8A	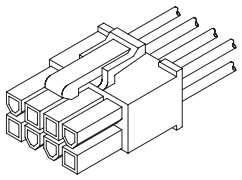 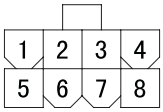	

CW type

Number shows number of pins	Female connector	Male connector
CW16A	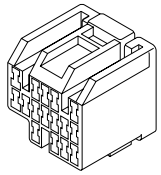 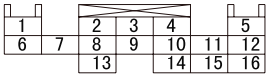	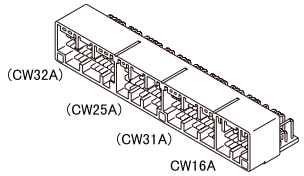

CONNECTOR CONFIGURATION CHART

Number shows number of pins	Female connector	Male connector
CW25A	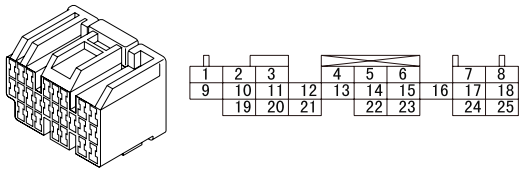	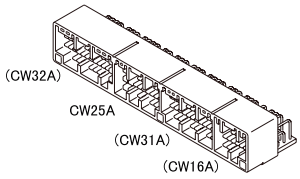
CW31A	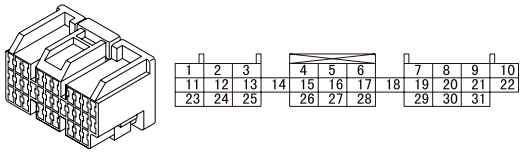	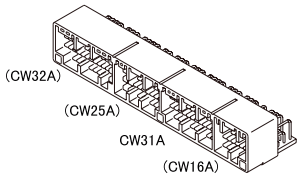
CW32A	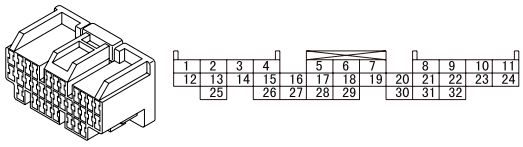	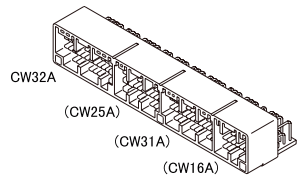

CX type

Number shows number of pins	Female connector	Male connector
CX30A	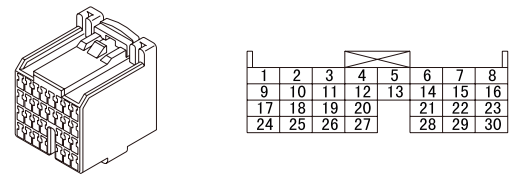	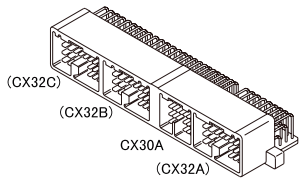
CX32A	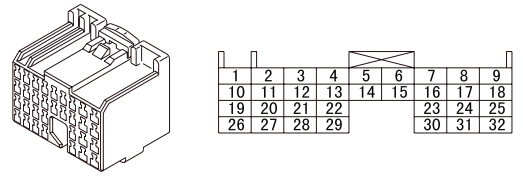	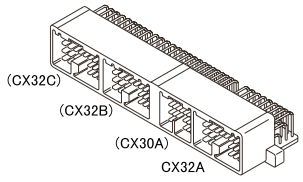
CX32B	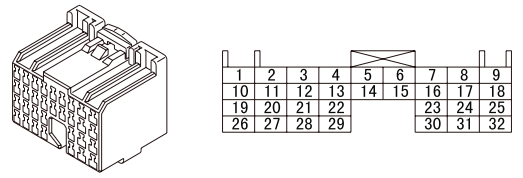	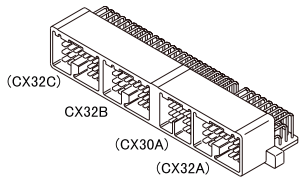
CX32C	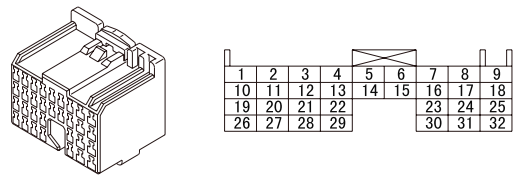	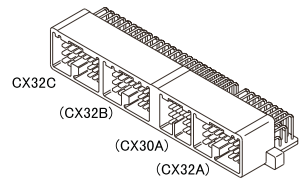

CY type

Number shows number of pins	Female connector	Male connector
CY17A	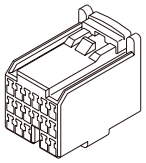 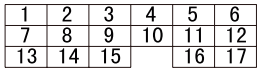	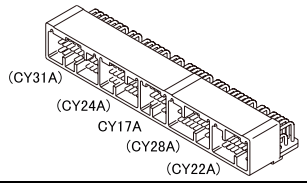
CY22A	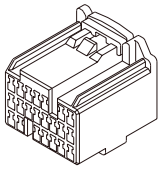	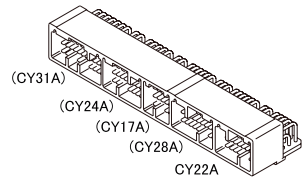
CY24A	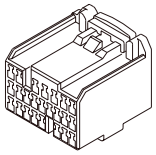 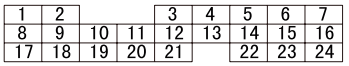	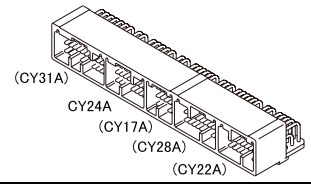
CY28A	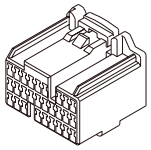 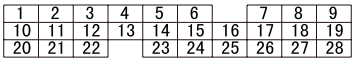	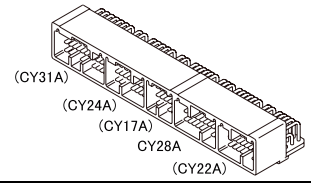
CY31A	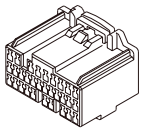 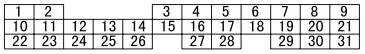	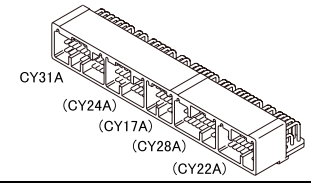

DA type

Number shows number of pins	Female connector	Male connector
DA20A	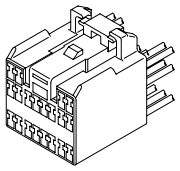 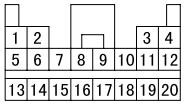	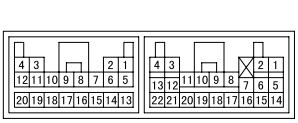 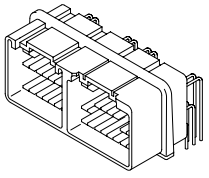
DA22A	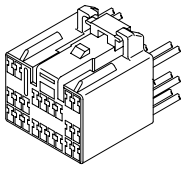 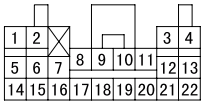	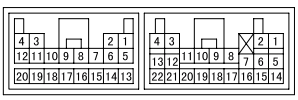 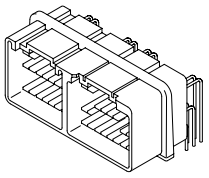
DA25A		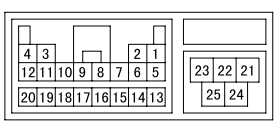 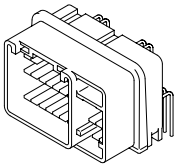

CONNECTOR CONFIGURATION CHART

DB type

Number shows number of pins	Female connector	Male connector
DB2A	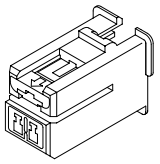	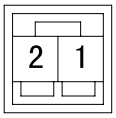 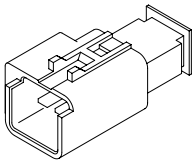

DC type

Number shows number of pins	Female connector	Male connector
DC3A	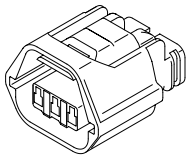	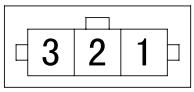 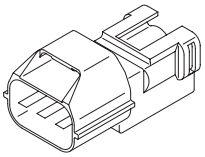

DD type

Number shows number of pins	Female connector	Male connector
DD1A	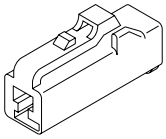	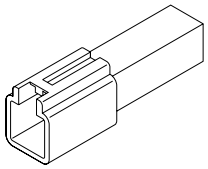
DD2A	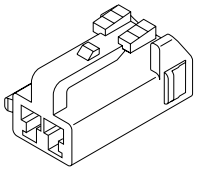	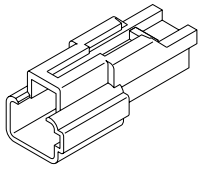
DD2B	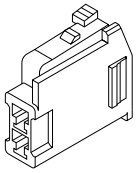	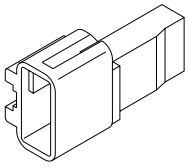
DD2C	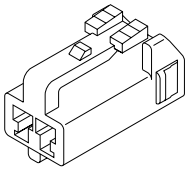	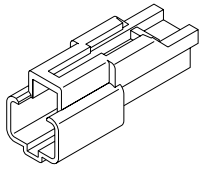
DD2E	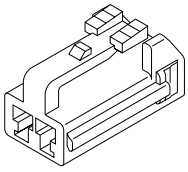	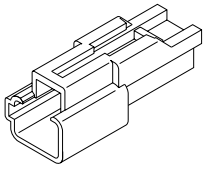

Number shows number of pins	Female connector	Male connector
DD2F	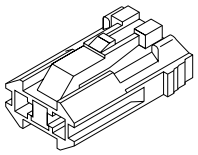	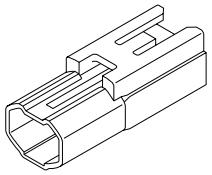
DD3A	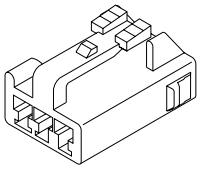	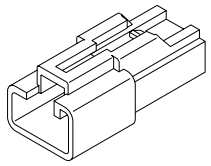
DD4A	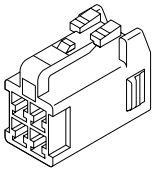	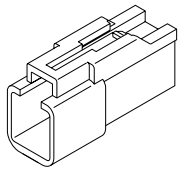
DD4C	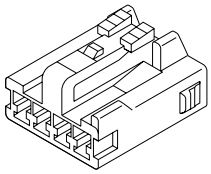 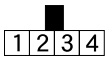	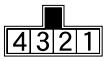 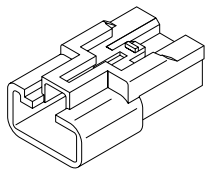
DD5A	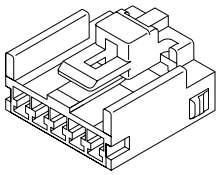 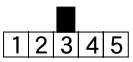	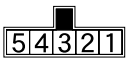 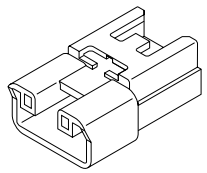
DD6A	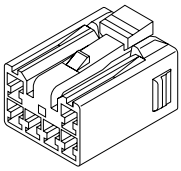 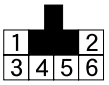	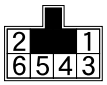 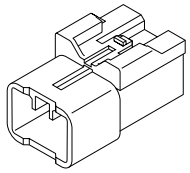
DD6B	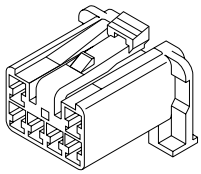 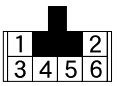	
DD6C	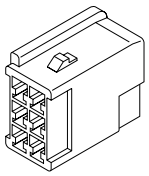 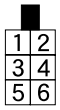	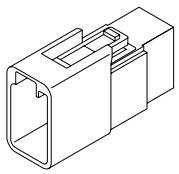
DD6E	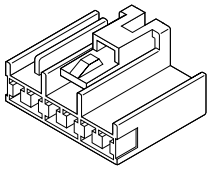 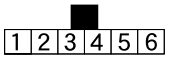	

CONNECTOR CONFIGURATION CHART

Number shows number of pins	Female connector	Male connector
DD7A	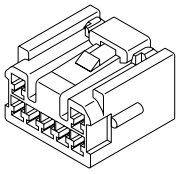 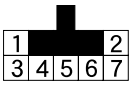	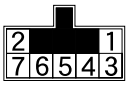 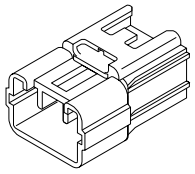
DD8A	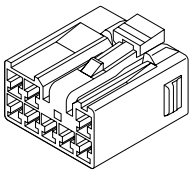 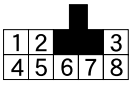	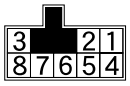 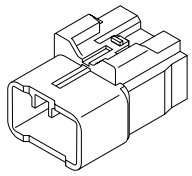
DD9A	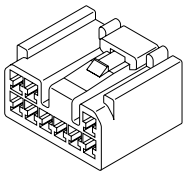 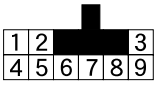	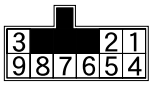 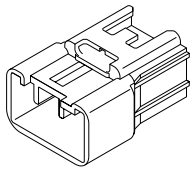
DD10A	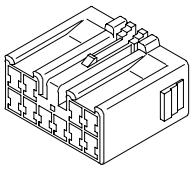 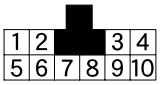	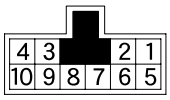 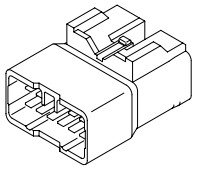
DD10B	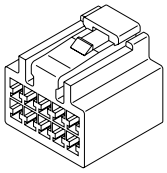 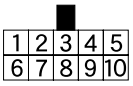	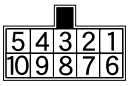 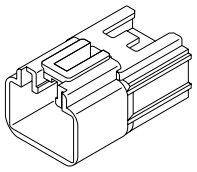
DD11A	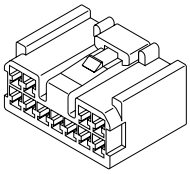 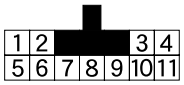	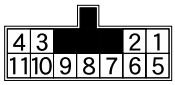 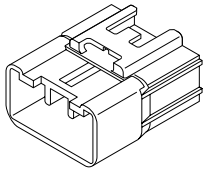
DD12A	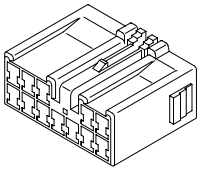 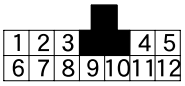	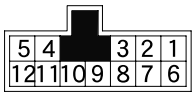 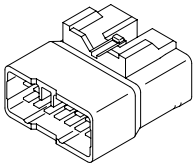
DD12B	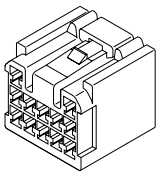 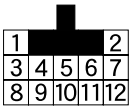	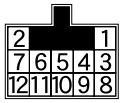 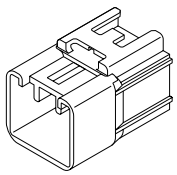
DD12C	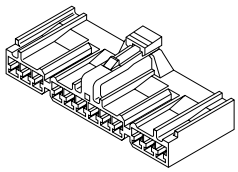 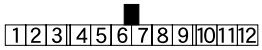	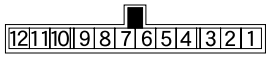

Number shows number of pins	Female connector	Male connector
DD13A	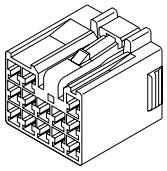 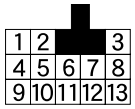	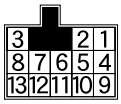 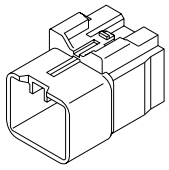
DD13B	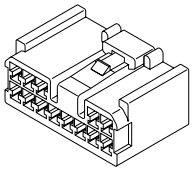 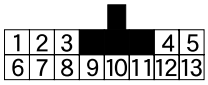	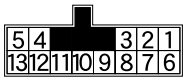 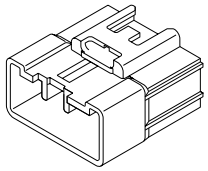
DD14A	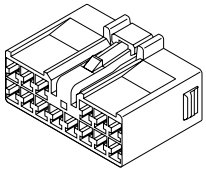 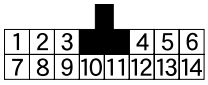	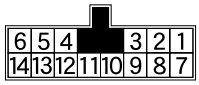 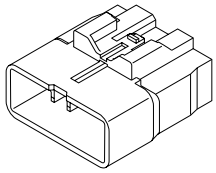
DD14B	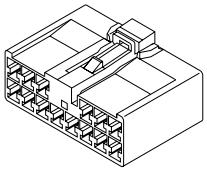 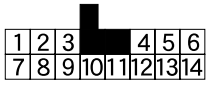	
DD15A	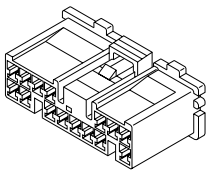 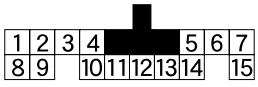	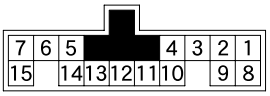 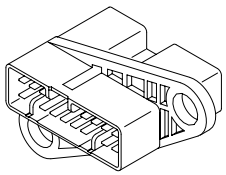
DD15B	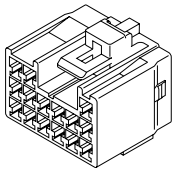 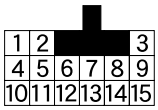	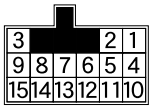 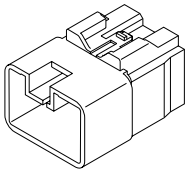
DD16A	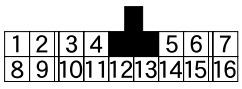	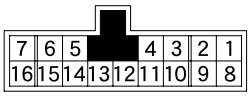
DD16B	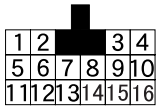	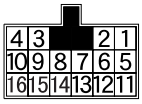
DD18A	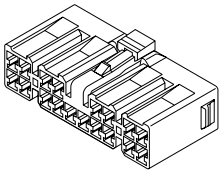 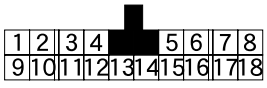	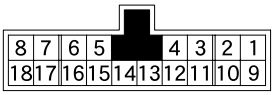 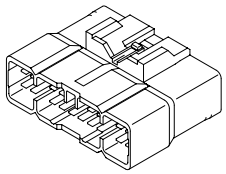

CONNECTOR CONFIGURATION CHART

Number shows number of pins	Female connector	Male connector
DD20A	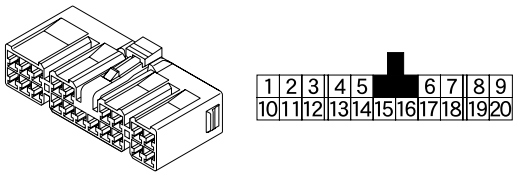	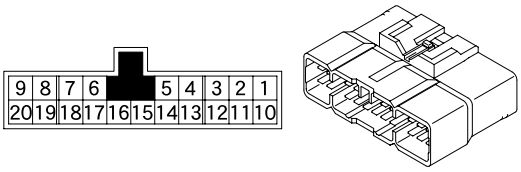
DD22A	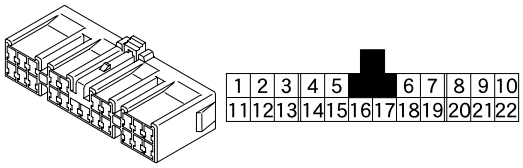	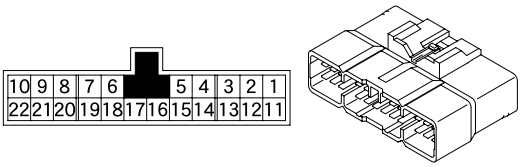

DE type

Number shows number of pins	Female connector	Male connector
DE3A		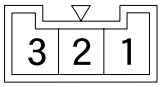
DE7A		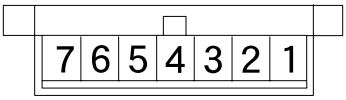

DF type

Number shows number of pins	Female connector	Male connector
DF3A		

DG type

Number shows number of pins	Female connector	Male connector
DG1A	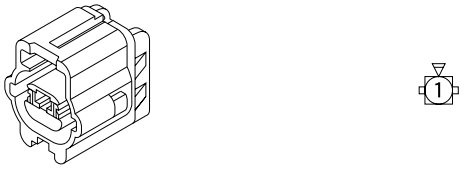	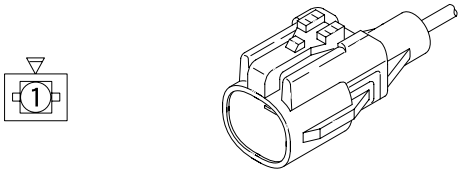

Number shows number of pins	Female connector	Male connector
DG1B	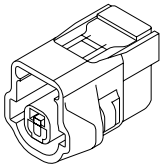	
DG1C	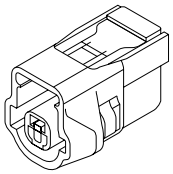	
DG1D	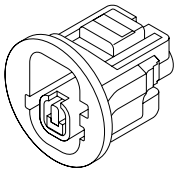	
DG2A	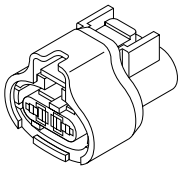	
DG2B	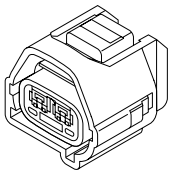	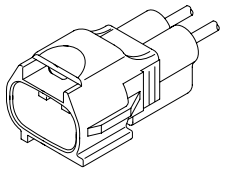
DG2C	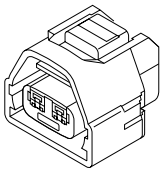	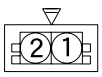 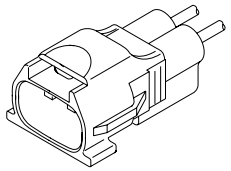
DG2D	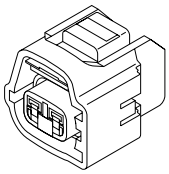	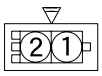 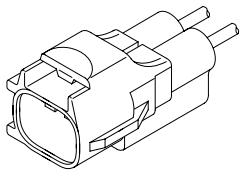
DG2E	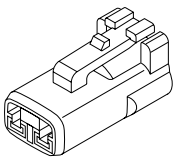	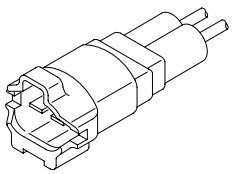
DG2F	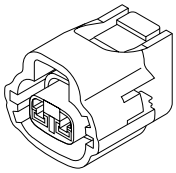	

CONNECTOR CONFIGURATION CHART

Number shows number of pins	Female connector	Male connector
DG2G	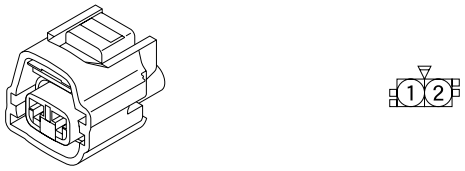	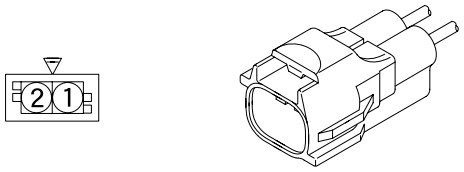
DG2H	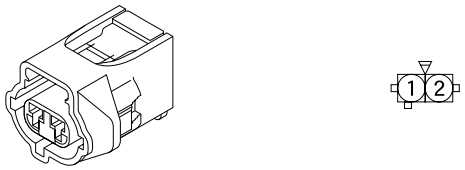	
DG2J		
DG2K		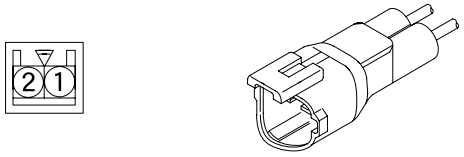
DG2L	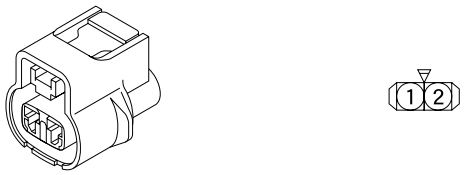	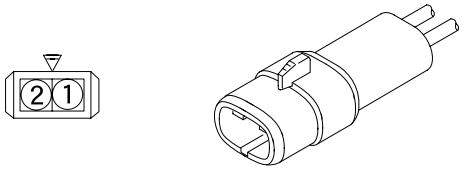
DG2M	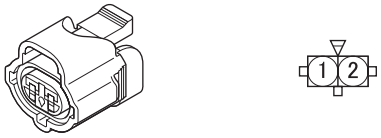	
DG3A	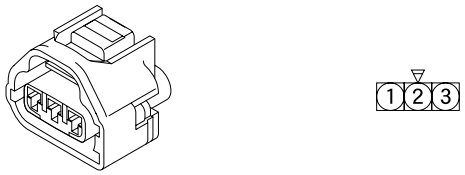	
DG3B		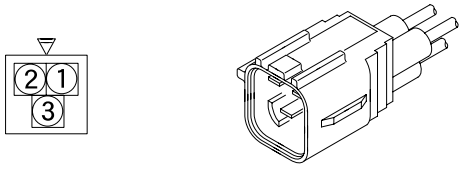
DG4A		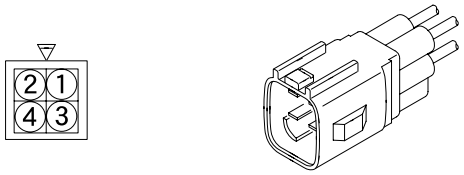

Number shows number of pins	Female connector	Male connector
DG4B	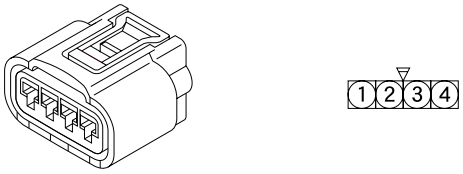	
DG4C		
DG5A	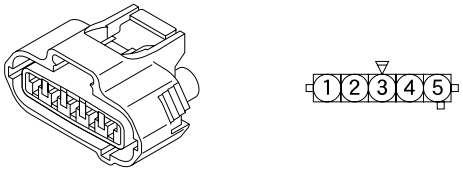	
DG5B	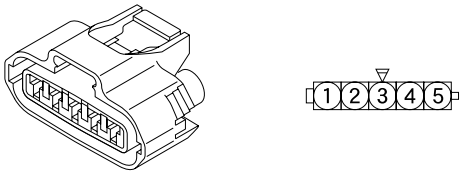	
DG5C	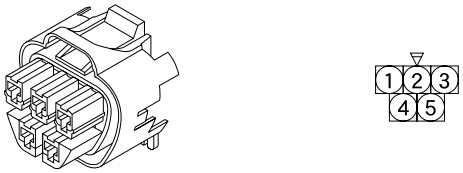	
DG5D	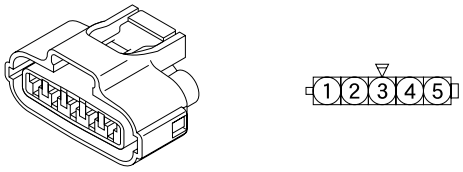	
DG6A	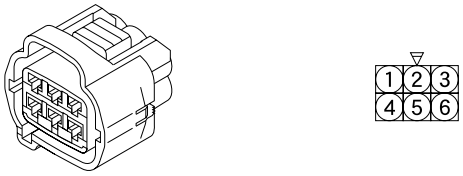	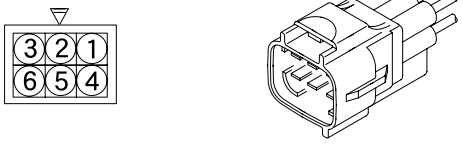
DG6B	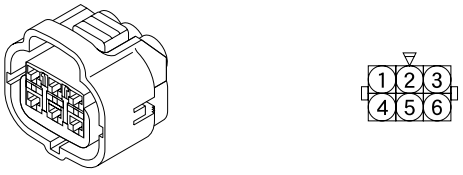	
DG6C	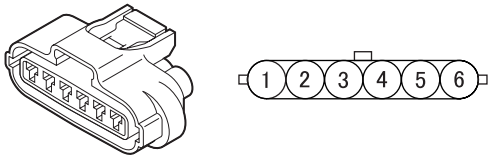	

CONNECTOR CONFIGURATION CHART

Number shows number of pins	Female connector	Male connector
DG8A	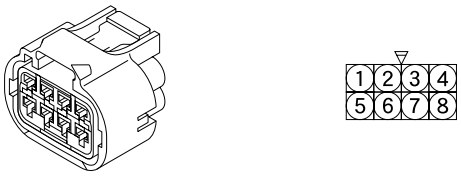	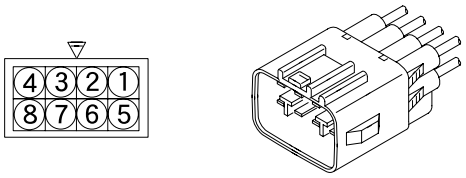
DG8B	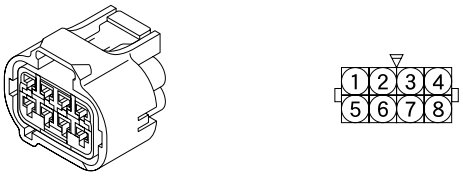	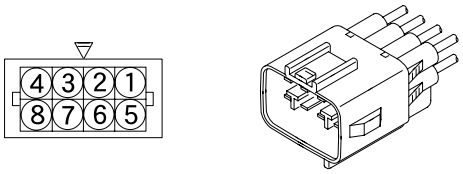
DG10A	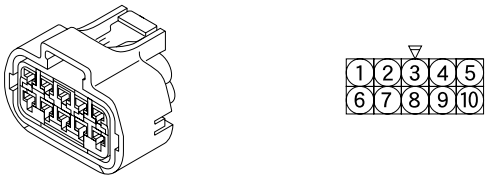	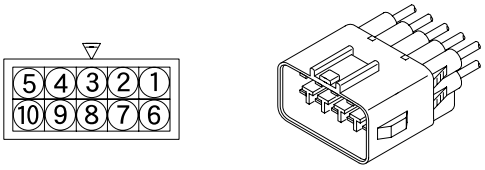
DG12A	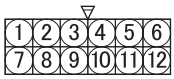	

DH type

Number shows number of pins	Female connector	Male connector
DH2A		
DH5A	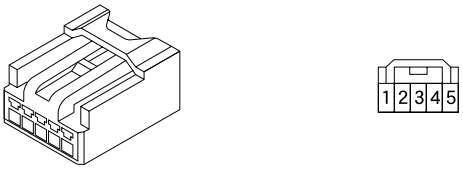	
DH10A	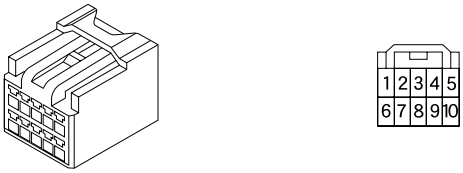	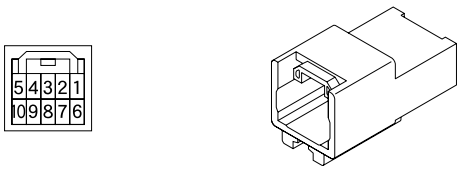
DH14A	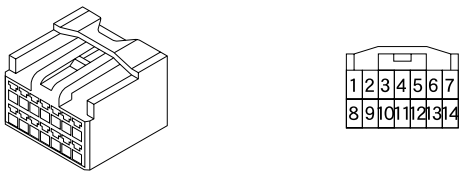	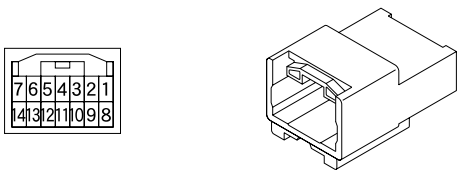

Number shows number of pins	Female connector	Male connector
DH18A	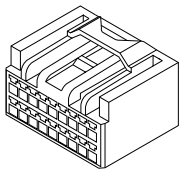 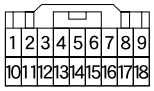	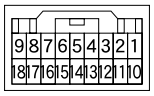 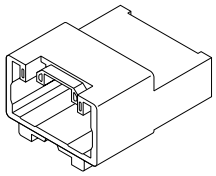
DH20A	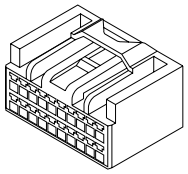 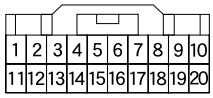	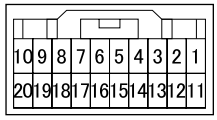 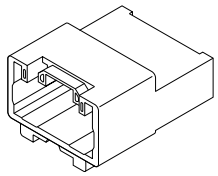
DH22A	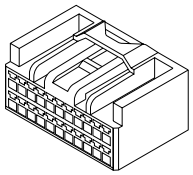 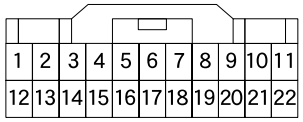	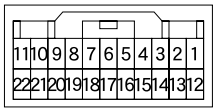 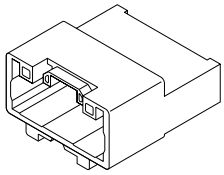

DJ type

Number shows number of pins	Female connector	Male connector
DJ10A	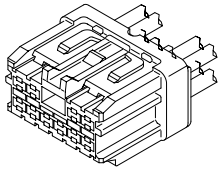 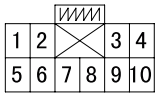	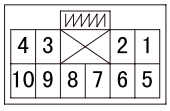 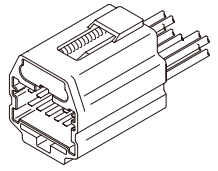
DJ10B	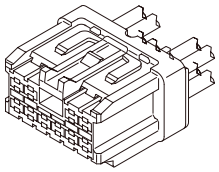 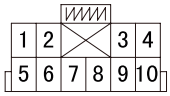	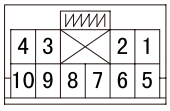 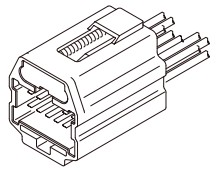

DK type

Number shows number of pins	Female connector	Male connector
DK2A	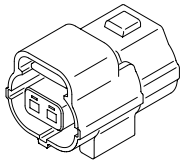	
DK2B	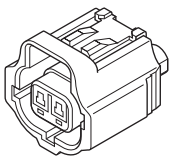	

CONNECTOR CONFIGURATION CHART

Number shows number of pins	Female connector	Male connector
DK3A	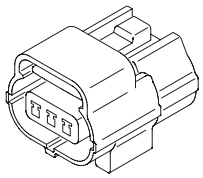 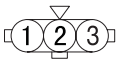	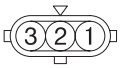 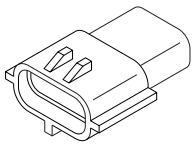
DK4A	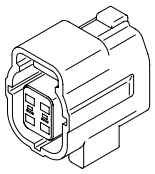 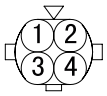	

DL type

Number shows number of pins	Female connector	Male connector
DL4A	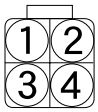	

DM type

Number shows number of pins	Female connector	Male connector
DM3A	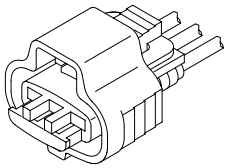 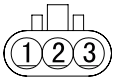	
DM4A	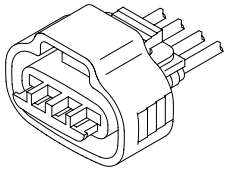 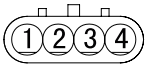	

DN type

Number shows number of pins	Female connector	Male connector
DN4A	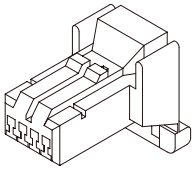 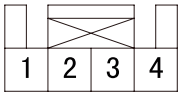	

DP type

Number shows number of pins	Female connector	Male connector
DP5A	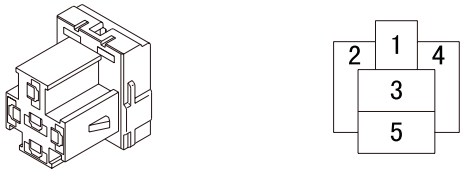	

DQ type

Number shows number of pins	Female connector	Male connector
DQ2A	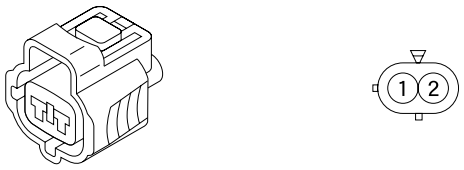	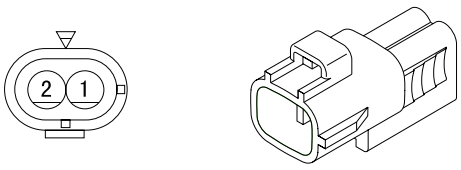
DQ2B	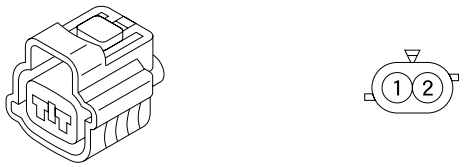	
DQ2C	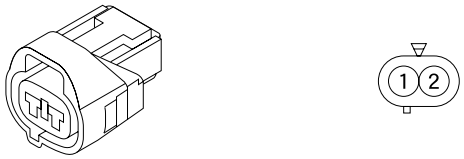	
DQ2D		
DQ2E	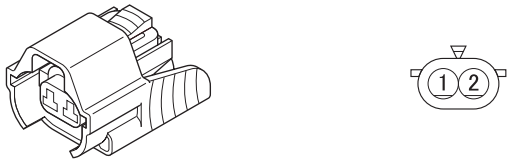	
DQ2F	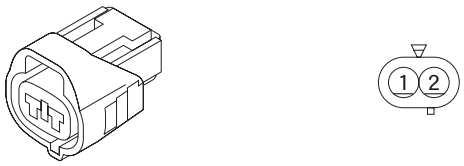	
DQ3A	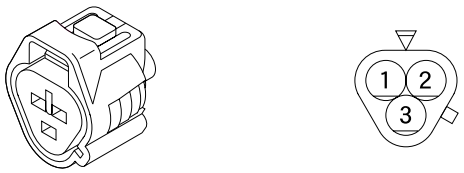	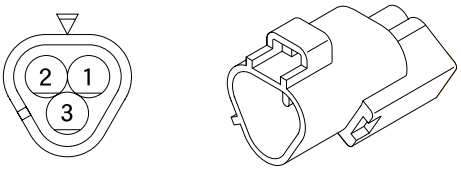

CONNECTOR CONFIGURATION CHART

Number shows number of pins	Female connector	Male connector
DQ3B	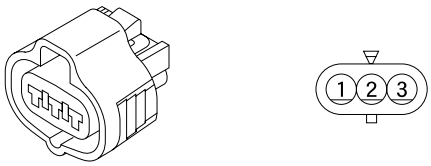	
DQ4A	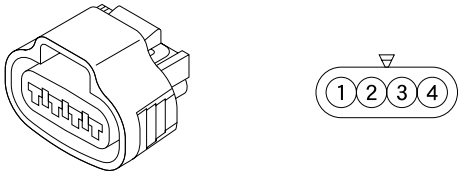	
DQ4B	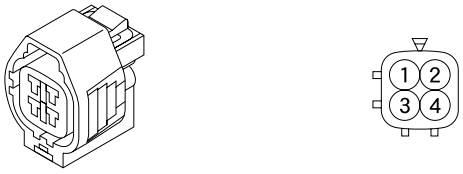	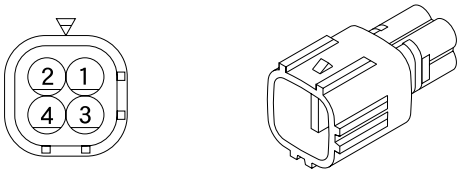
DQ8A	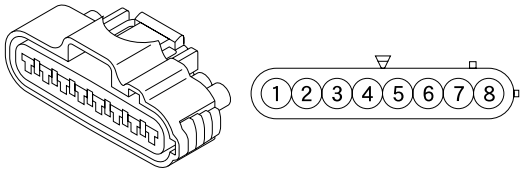	

DS type

Number shows number of pins	Female connector	Male connector
DS2A	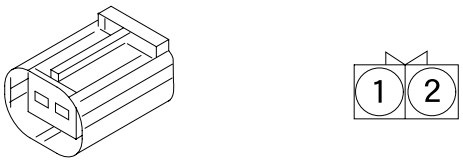	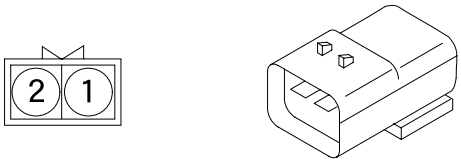
DS6A	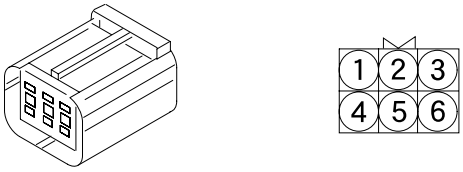	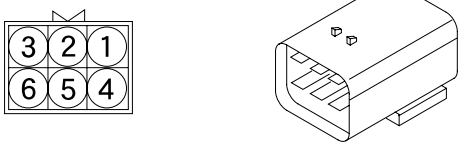

DT type

Number shows number of pins	Female connector	Male connector
DT1A	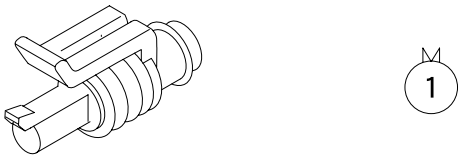	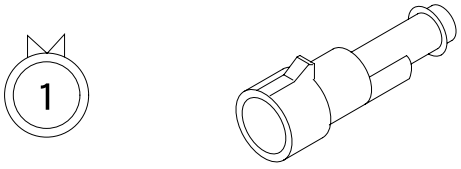

Number shows number of pins	Female connector	Male connector
DT2A		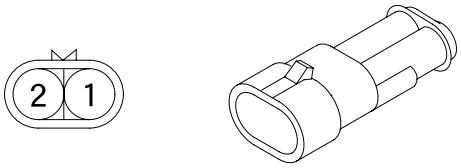
DT3A	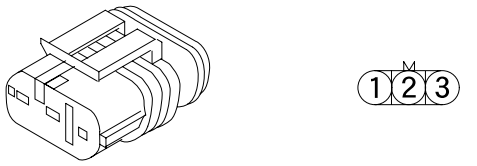	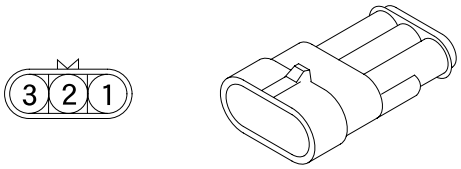
DT4A	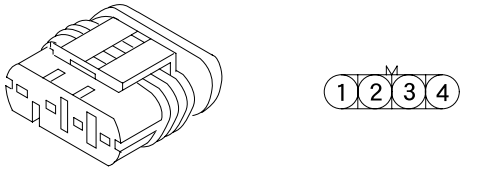	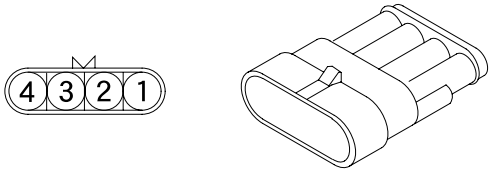

DU type

Number shows number of pins	Female connector	Male connector
DU2A	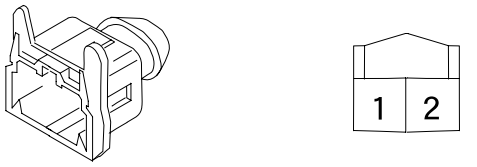	

DV type

Number shows number of pins	Female connector	Male connector
DV4A	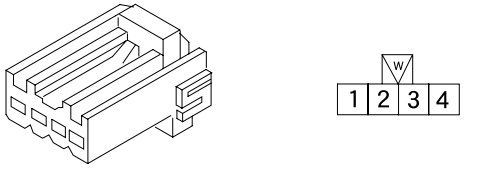	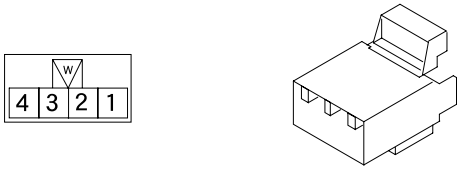

DW type

Number shows number of pins	Female connector	Male connector
DW2A		

CONNECTOR CONFIGURATION CHART

DX type

Number shows number of pins	Female connector	Male connector
DX2A		

DY type

Number shows number of pins	Female connector	Male connector
DY1A	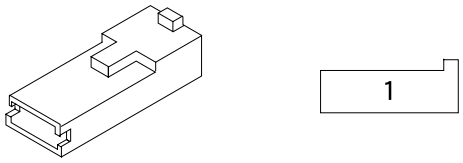	
DY1B	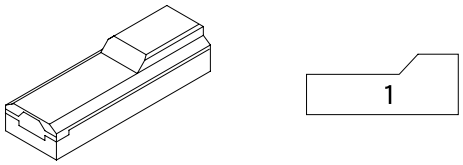	

DZ type

Number shows number of pins	Female connector	Male connector
DZ1A	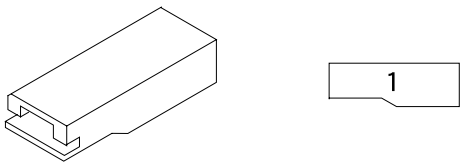	

EA type

Number shows number of pins	Female connector	Male connector
EA8A		
EA8B		

EB type

Number shows number of pins	Female connector	Male connector
EB8A	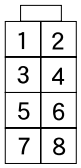	

EC type

Number shows number of pins	Female connector	Male connector
EC2A	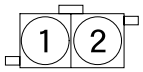	

ED type

Number shows number of pins	Female connector	Male connector
ED2A	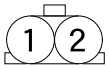	

EE type

Number shows number of pins	Female connector	Male connector
EE2A	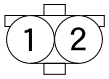	

EF type

Number shows number of pins	Female connector	Male connector
EF2A	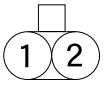	

CONNECTOR CONFIGURATION CHART

EG type

Number shows number of pins	Female connector	Male connector
EG4A	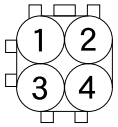	

EH type

Number shows number of pins	Female connector	Male connector
EH2A	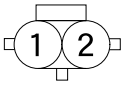	

EJ type

Number shows number of pins	Female connector	Male connector
EJ9A	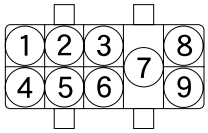	

EK type

Number shows number of pins	Female connector	Male connector
EK2A	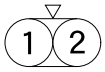	

EL type

Number shows number of pins	Female connector	Male connector
EL2A	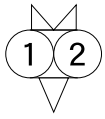	

EM type

Number shows number of pins	Female connector	Male connector
EM40A	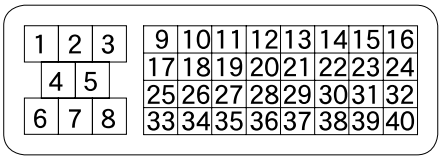	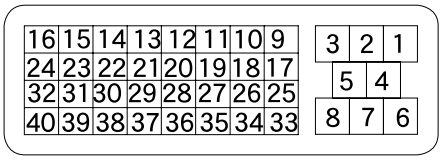
EM81A	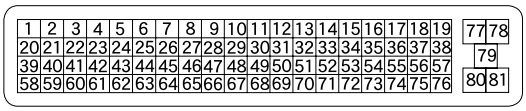	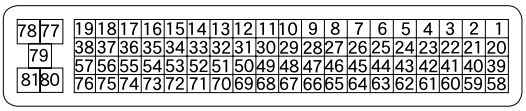

EN type

Number shows number of pins	Female connector	Male connector
EN4A	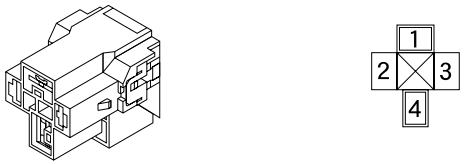	
EN5A		

EP type

Number shows number of pins	Female connector	Male connector
EP34A	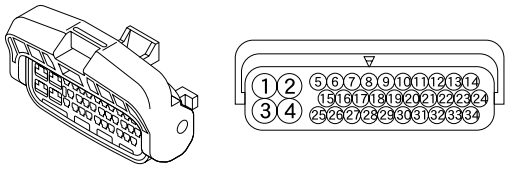	

EQ type

Number shows number of pins	Female connector	Male connector
EQ4A		

CONNECTOR CONFIGURATION CHART

Number shows number of pins	Female connector	Male connector
EQ4B	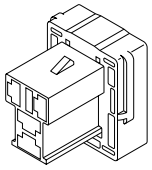 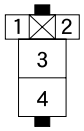	
EQ5A	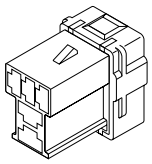 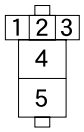 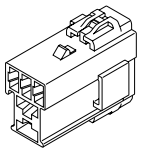 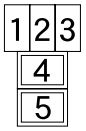	
EQ5B	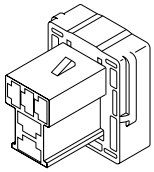 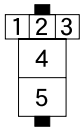	

ER type

Number shows number of pins	Female connector	Male connector
ER2A	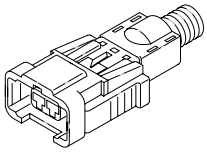	
ER6A	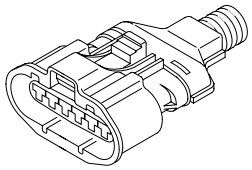 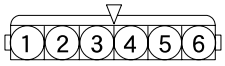	
ER8A	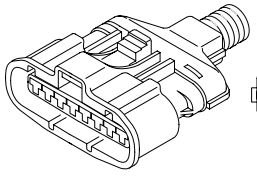 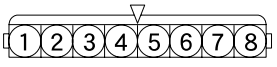	

ES type

Number shows number of pins	Female connector	Male connector
ES2A	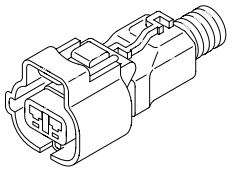	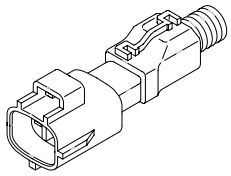
ES2B	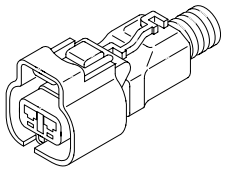	
ES2C		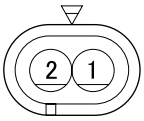
ES3A	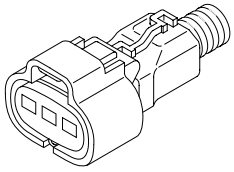	
ES3B	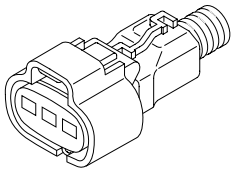 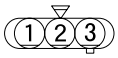	
ES4A	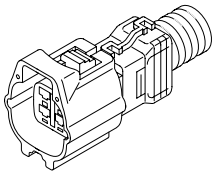	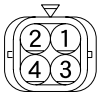 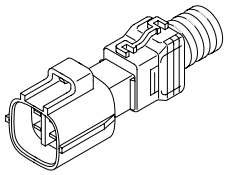

ET type

Number shows number of pins	Female connector	Male connector
ET1A	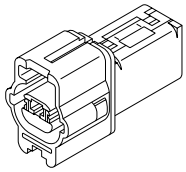	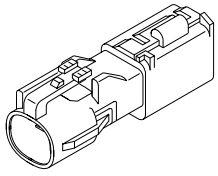
ET1B	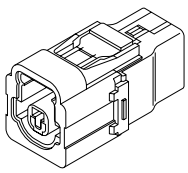	

CONNECTOR CONFIGURATION CHART

Number shows number of pins	Female connector	Male connector
ET2A	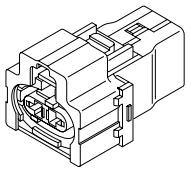	
ET2B	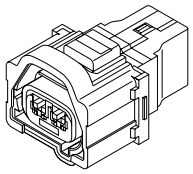	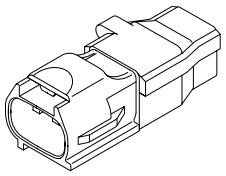
ET2C	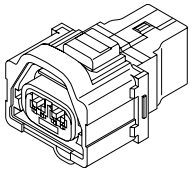	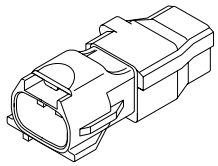
ET2D	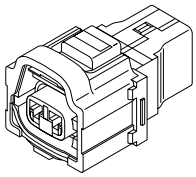	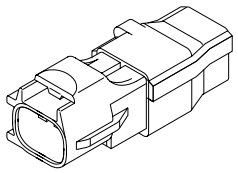
ET2F	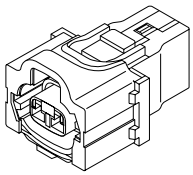	
ET2G	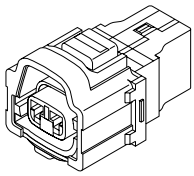	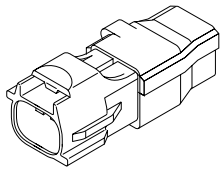
ET2L	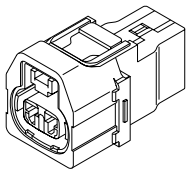	
ET3A	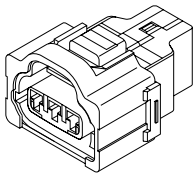	
ET3B	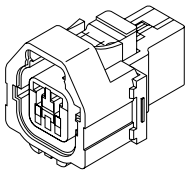	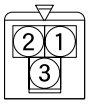 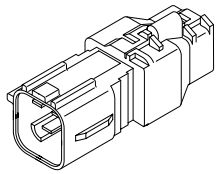

Number shows number of pins	Female connector	Male connector
ET3C	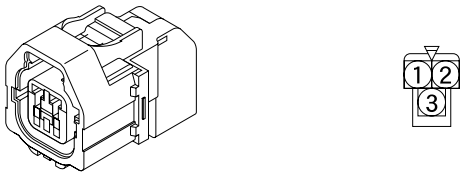	
ET4A	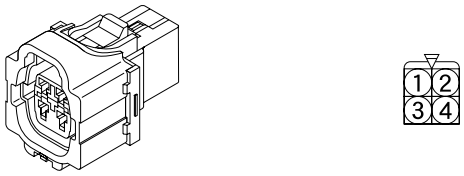	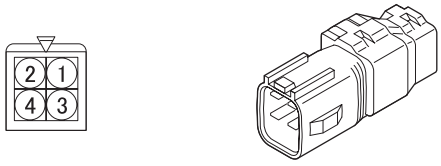
ET4B	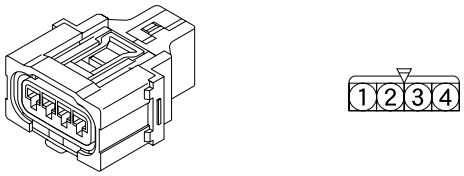	
ET5A	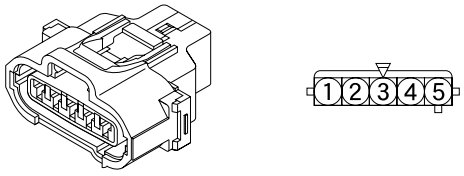	
ET5B	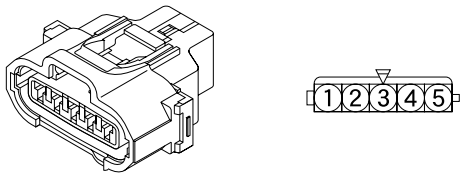	
ET5D	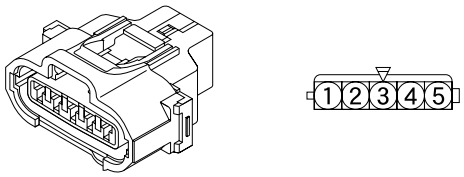	
ET6A	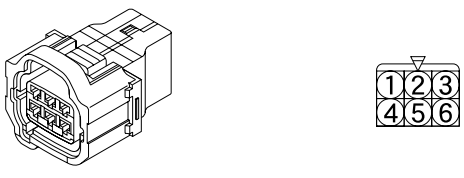	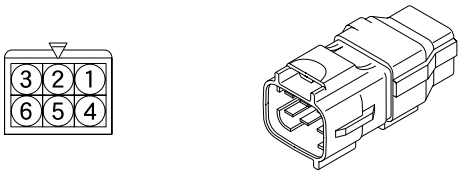
ET6B	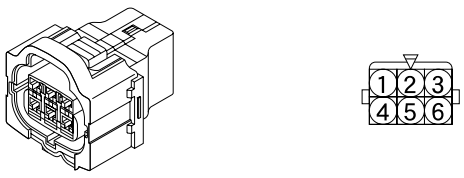	
ET6C	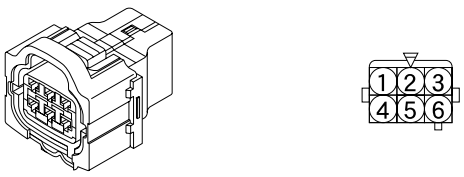	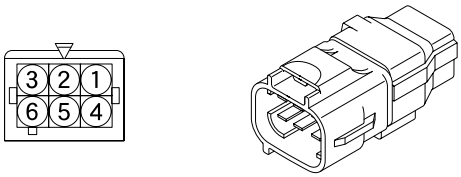

CONNECTOR CONFIGURATION CHART

Number shows number of pins	Female connector	Male connector
ET8A	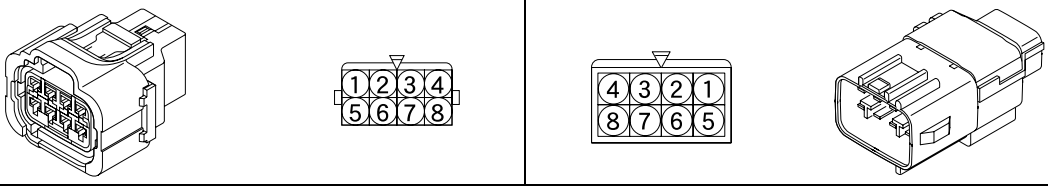	
ET8B	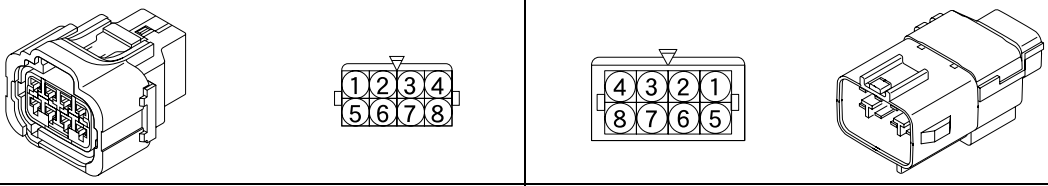	
ET10A	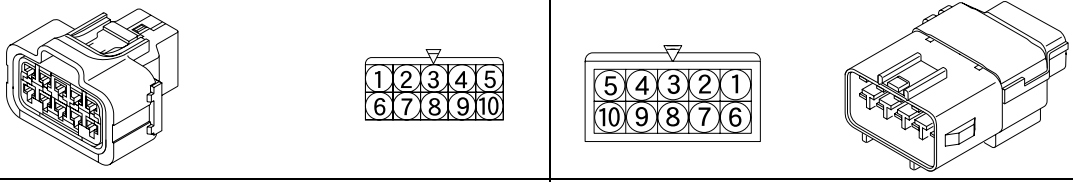	
ET32A	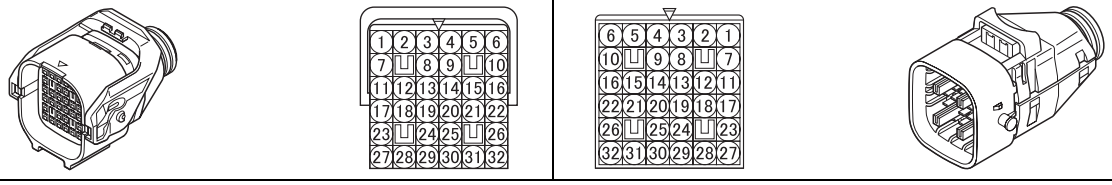	

EU type

Number shows number of pins	Female connector	Male connector
EU1A	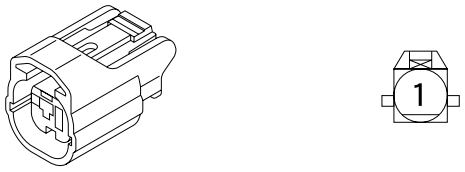	

EV type

Number shows number of pins	Female connector	Male connector
EV2A	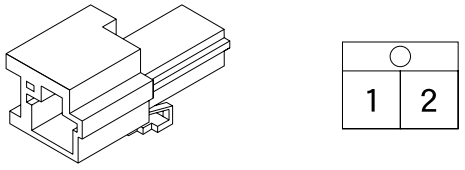	

EW type

Number shows number of pins	Female connector	Male connector
EW12A	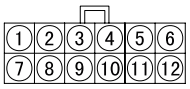	

EX type

Number shows number of pins	Female connector	Male connector
EX5A	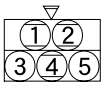	

EY type

Number shows number of pins	Female connector	Male connector
EY3A	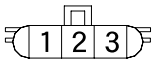	

EZ type

Number shows number of pins	Female connector	Male connector
EZ3A	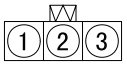	

FA type

Number shows number of pins	Female connector	Male connector
FA2B	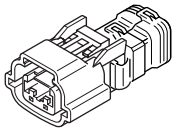 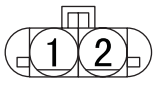	

CONNECTOR CONFIGURATION CHART

Number shows number of pins	Female connector	Male connector
FA5A	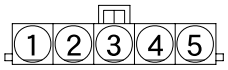	

FB type

Number shows number of pins	Female connector	Male connector
FB55A	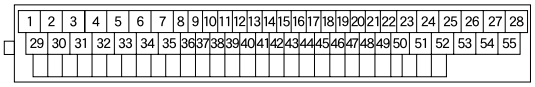	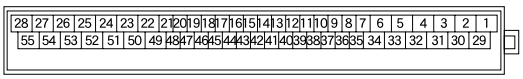

GA type

Number shows number of pins	Female connector	Male connector
GA1A	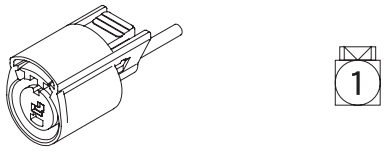	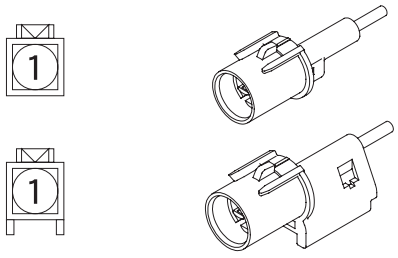
GA2A	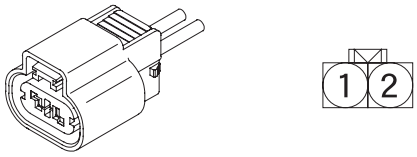	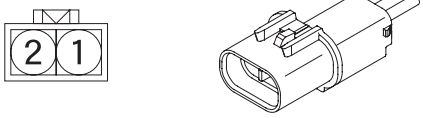
GA2B	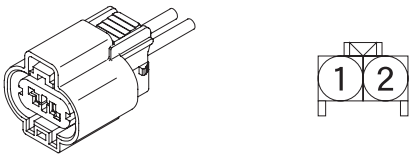	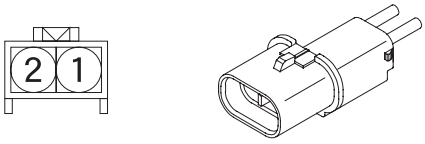
GA3A	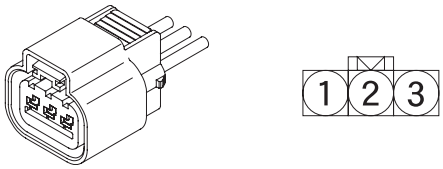	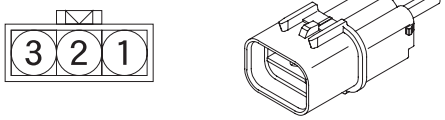
GA3B	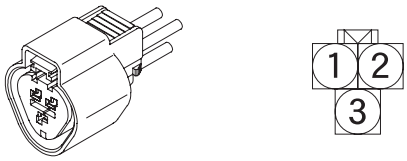	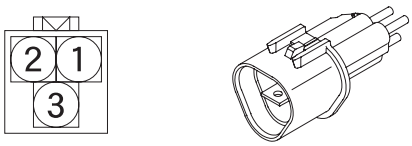

Number shows number of pins	Female connector	Male connector
GA4A	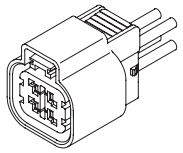 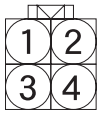	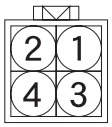 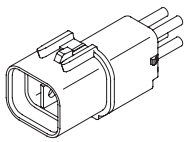
GA4B	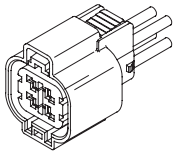 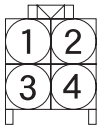	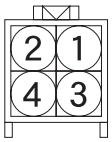 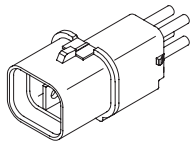
GA6A	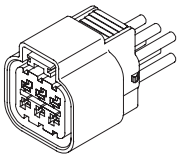 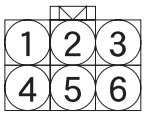	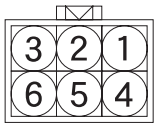 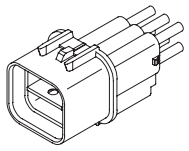
GA6B	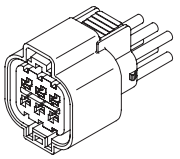 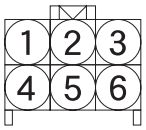	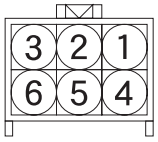 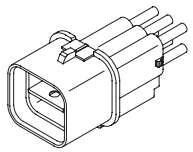
GA8A	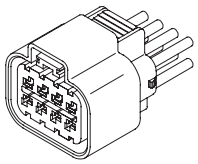 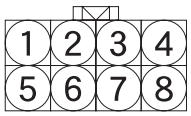	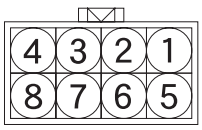 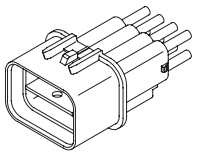
GA10A	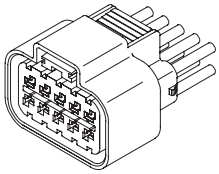 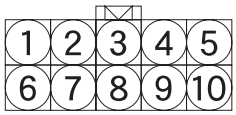	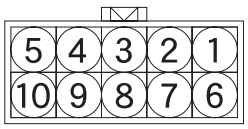 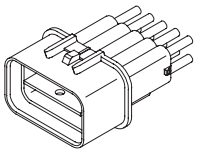
GA12A	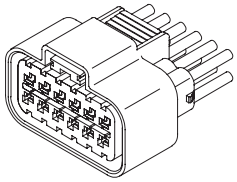 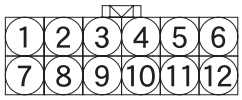	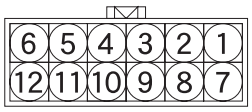 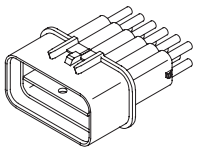

GB type

Number shows number of pins	Female connector	Male connector
GB1A	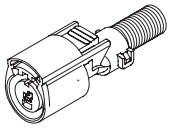	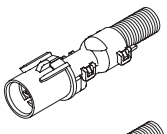 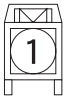 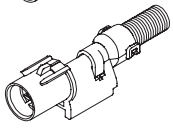

CONNECTOR CONFIGURATION CHART

Number shows number of pins	Female connector	Male connector
GB2A	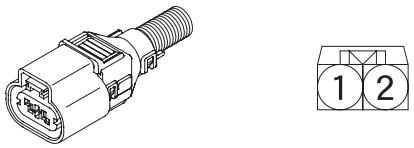	
GB2B	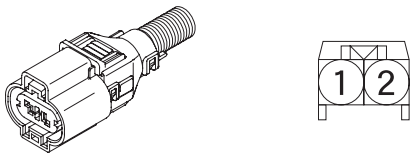	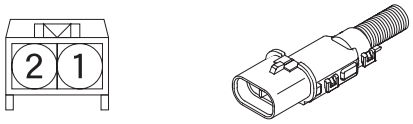
GB3A	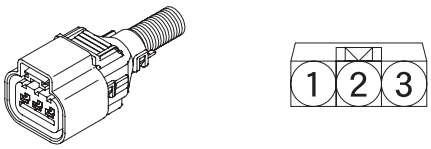	
GB3B	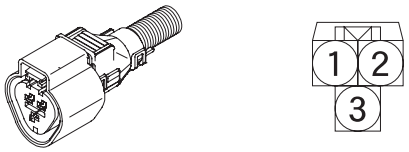	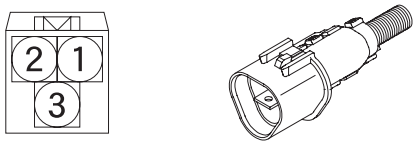
GB4A	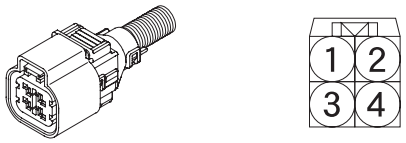	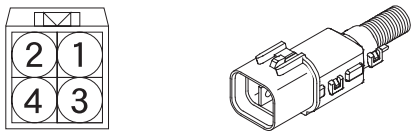
GB4B	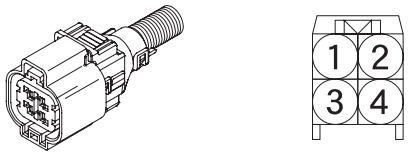	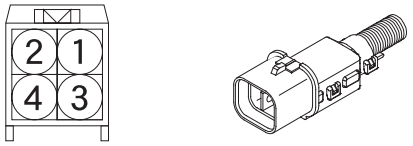
GB6A	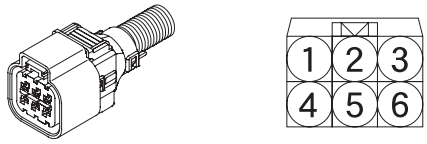	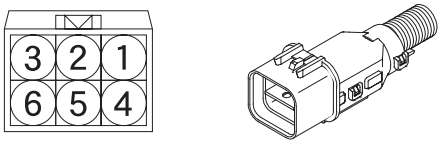
GB6B	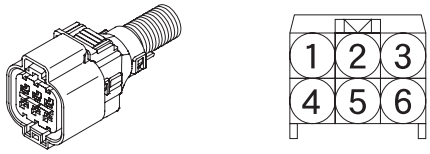	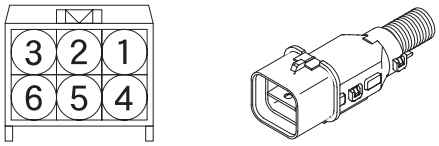
GB8A	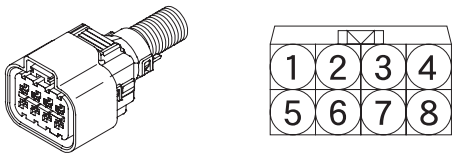	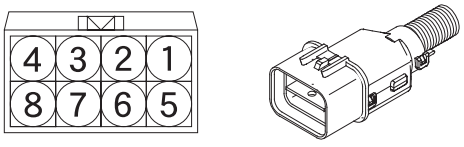

Number shows number of pins	Female connector	Male connector
GB10A	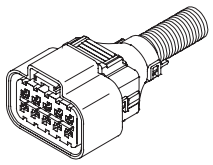 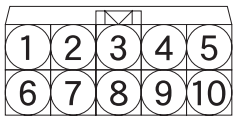	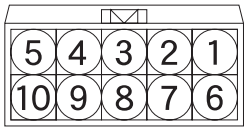 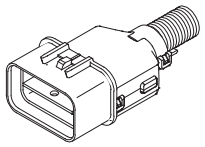
GB12A	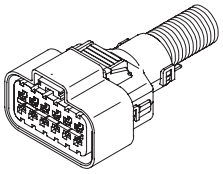 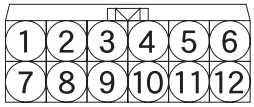	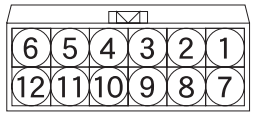 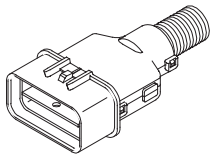

GC type

Number shows number of pins	Female connector	Male connector
GC32A	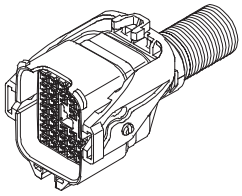 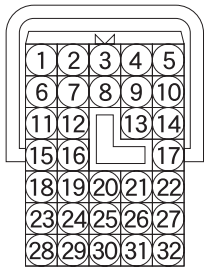	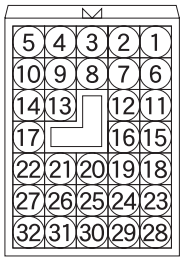 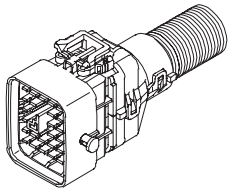

GD type

Number shows number of pins	Female connector	Male connector
GD1A	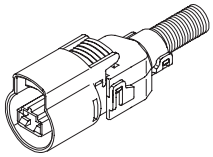	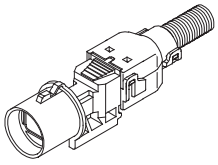
GD2A	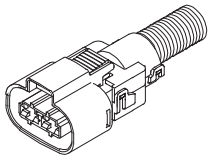	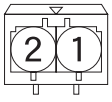 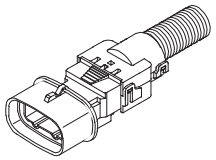
GD3A	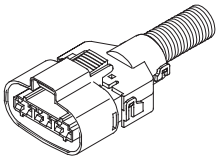 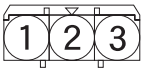	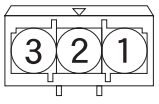 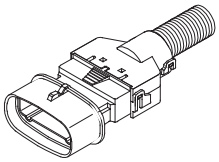
GD3B	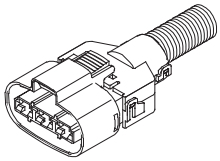 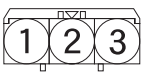	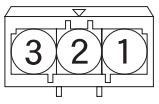 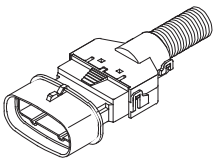

CONNECTOR CONFIGURATION CHART

GE type

Number shows number of pins	Female connector
GE58A	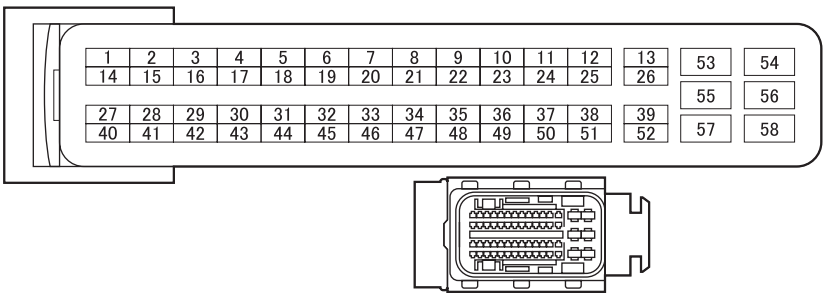
GE96A	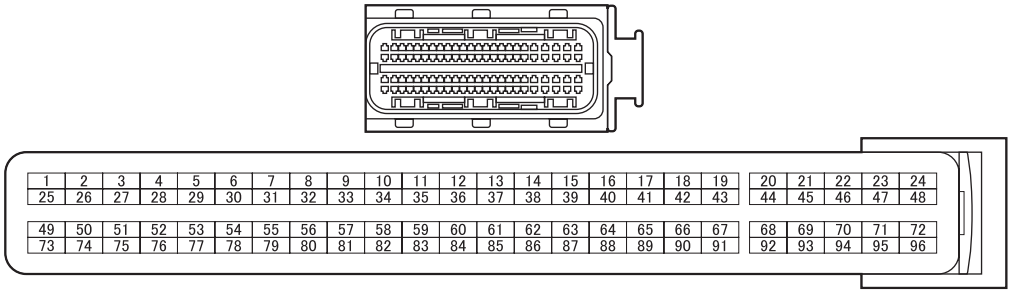

GF type

Number shows number of pins	Female connector	Male connector
GF31A	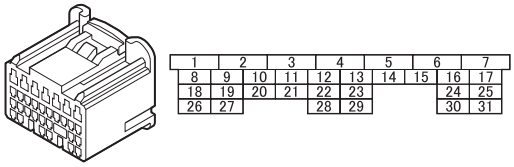	
GF32A	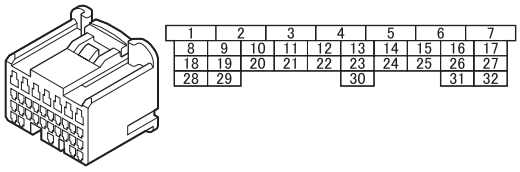	
GF34A	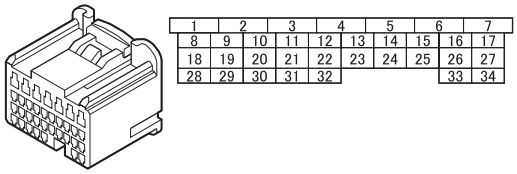	
GF35A	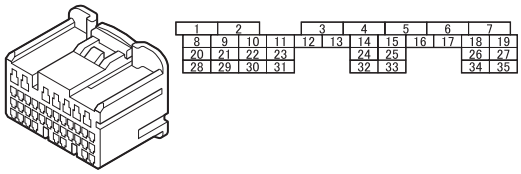	

Number shows number of pins	Female connector	Male connector
GF35B	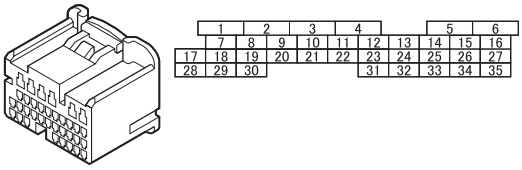	

GG type

Number shows number of pins	Female connector	Male connector
GG12A		
GG16A	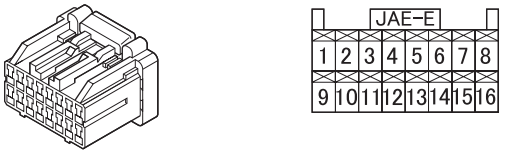	
GG22A	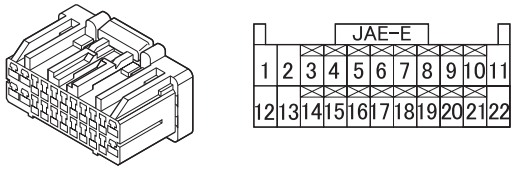	
GG26A	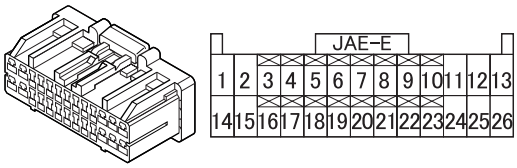	

GH type

Number shows number of pins	Female connector	Male connector
GH3A	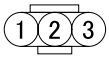	

CONNECTOR CONFIGURATION CHART

GJ type

Number shows number of pins	Female connector	Male connector
GJ2A		
GJ2B	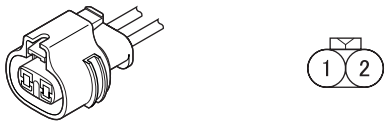	

GK type

Number shows number of pins	Female connector	Male connector
GK7A	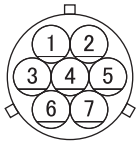	

GL type

Number shows number of pins	Female connector	Male connector
GL2A	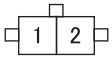	

GM type

Number shows number of pins	Female connector	Male connector
GM2A	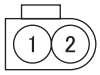	

GN type

Number shows number of pins	Female connector	Male connector
GN2A		

GP type

Number shows number of pins	Female connector	Male connector
GP8A	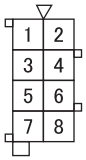	
GP8B	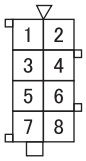	

GQ type

Number shows number of pins	Female connector	Male connector
GQ9A	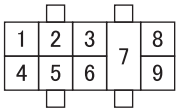	

GR type

Number shows number of pins	Female connector	Male connector
GR13A	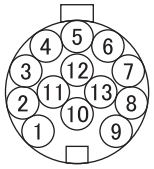	
GR15A	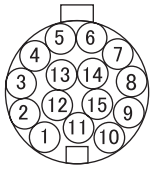	

CONNECTOR CONFIGURATION CHART

GS type

Number shows number of pins	Female connector	Male connector
GS2A	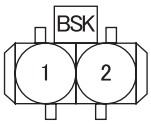	
GS2B	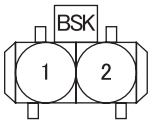	
GS3A	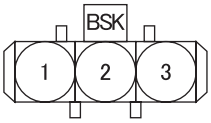	

GT type

Number shows number of pins	Female connector	Male connector
GT24A	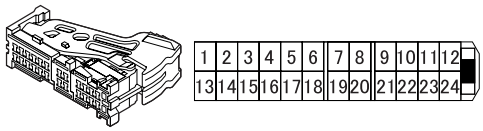	
GT28A	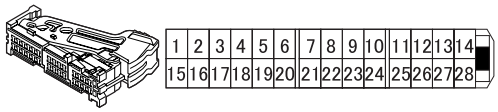	
GT32A	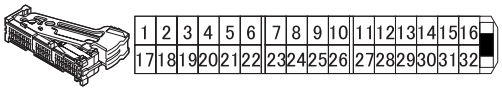	

GV type

Number shows number of pins	Female connector	Male connector
GV12A	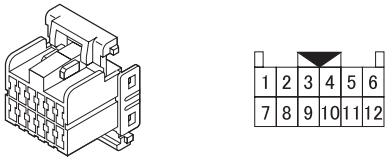	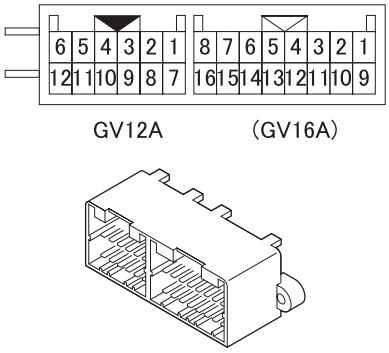
GV16A	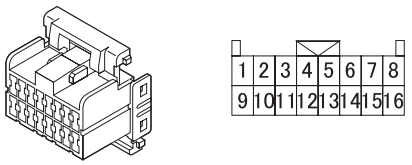	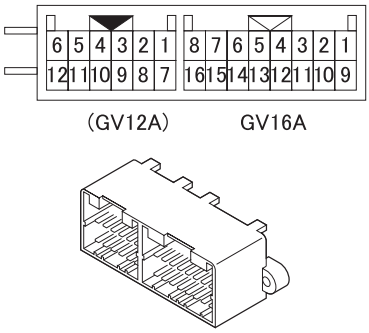
GV20A	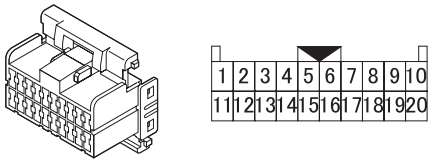	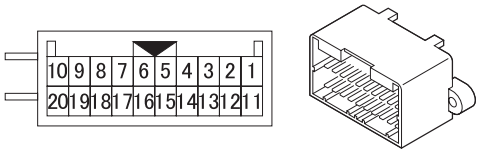

GW type

Number shows number of pins	Female connector	Male connector
GW3A	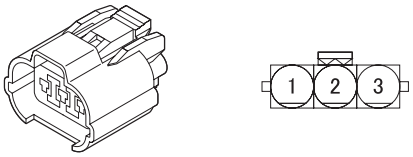	
GW4A	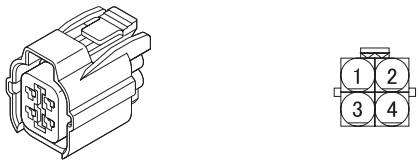	

CONNECTOR CONFIGURATION CHART

GX type

Number shows number of pins	Female connector	Male connector
GX1A	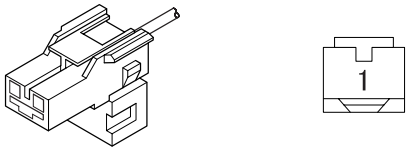	

HB type

Number shows number of pins	Female connector	Male connector
HB4A	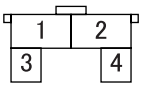	

HC type

Number shows number of pins	Female connector	Male connector
HC11A	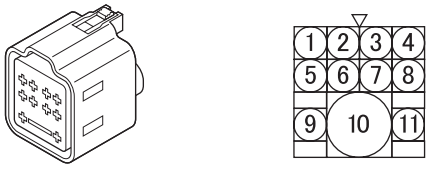	

PC type

Number shows number of pins	Female connector	Male connector
PC4A	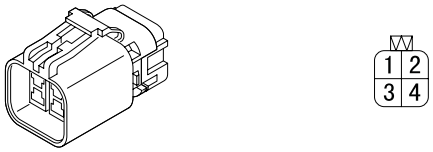	

PE type

Number shows number of pins	Female connector	Male connector
PE12A	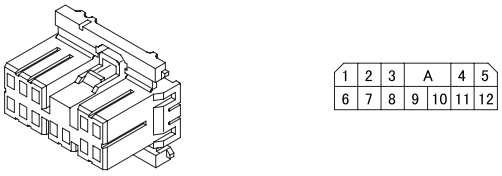	

Number shows number of pins	Female connector	Male connector
PE14A	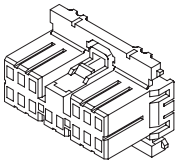 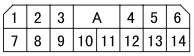	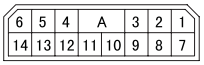 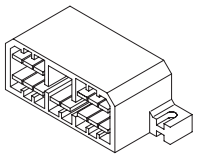 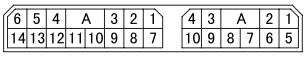 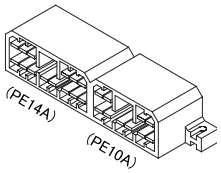

Group 55

Heater, Air-conditioner And Ventilation

Table of Contents

Back

Home

MITSUBISHI FUSO TRUCK OF AMERICA, Inc.

Pub.No.TWME0709-55

INDEX

SPECIFICATIONS 55-2

STRUCTURE AND OPERATION

1. **Heater 55-4**
2. **Air-conditioner 55-5**
3. **Air Duct 55-6**
4. **Air-conditioner Control 55-7**

TROUBLESHOOTING 55-9

ON-VEHICLE INSPECTION AND ADJUSTMENT

1. **Recovery of Refrigerant 55-10**
2. **Recharging the System with Refrigerant 55-11**
3. **Checking Refrigerant Charge Level 55-13**
4. **Adding Refrigerant 55-14**
5. **Cleaning and Replacement of Evaporator 55-15**
6. **Cleaning and Replacement of Heater Core 55-17**

CONNECTING AIR-CONDITIONER PIPING 55-20

COMPRESSOR 55-21

CONDENSER 55-22

AIR-CONDITIONER CONTROL 55-24

AIR DUCT 55-26

COOLING AND HEATER UNIT, BLOWER 55-28

SPECIFICATIONS

Item				Specifications
System	Refrigerant	Type		HFC134a
		Charged quantity g {oz}		350 {12.3}
	Damper change-over system	Mode selection		Manual cable type
		Air mixing		Manual cable type
		Ventilation/recirculation selection		Servomotor type
Servomotor rated voltage V				12
Cooling and heater unit		Manufacturer		DENSO
		Cooling capacity W {kcal/h}		4400 ± 440 {3780 ± 380}
		Heating capacity W {kcal/h}		5550 ± 555 {4773 ± 477}
		Temperature control system		Air mixing type
Blower		Manufacturer		DENSO
		Rated voltage V		12
Compressor		Manufacturer		DENSO
		Model		10S13C
		Discharge cm^3 {cu.in.}/1 rotation		138.3 {8.44}
		Lubricant	Type	ND-OIL8
			Quantity cm^3 {cu.in.}	$100\ ^{+15}_{0}$ {$6.10\ ^{+0.92}_{0}$}
Side condenser		Manufacturer		DENSO
		Rated voltage V		12
		Rated current A		6.5 ± 2

M E M O

1. Heater

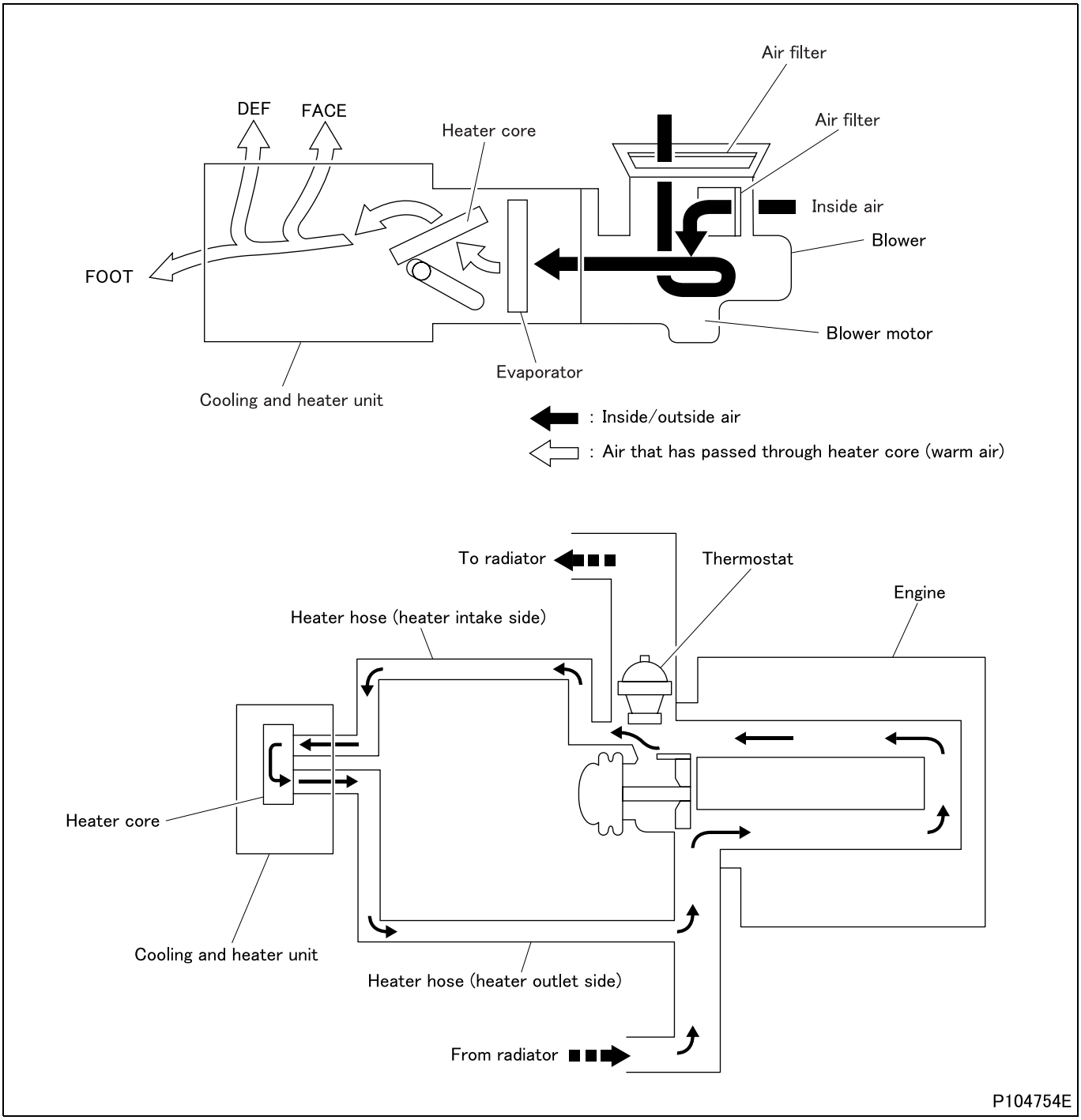

- The blower sends air to the cooling and heater unit, where the air is heated by the heater core (heat exchanger). The warmed-up air is then sent through the ducts into the cab.
- Water (engine coolant) warmed up by the heat from the engine circulates permanently through the heater core, irrespective of whether the thermostat is open or closed.

2. Air Conditioner

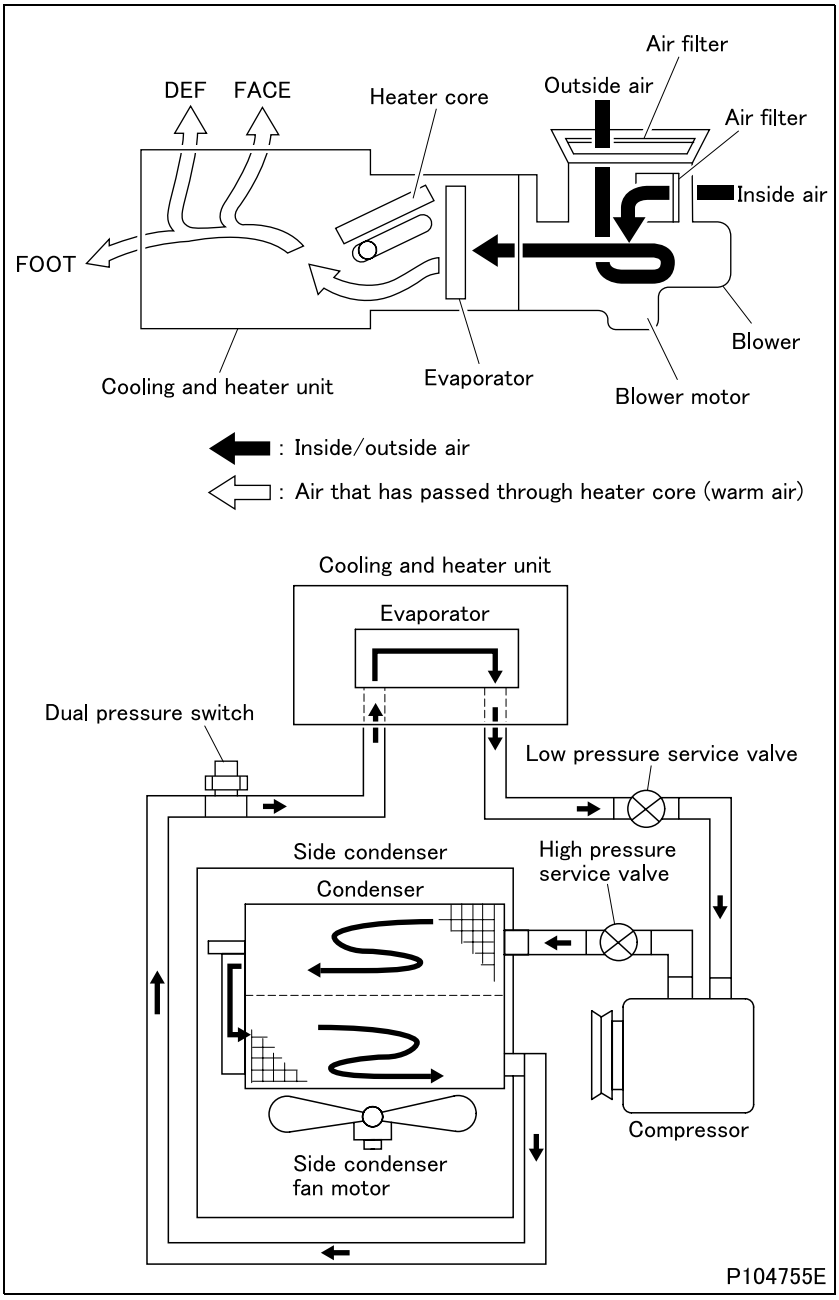

- The blower sends air to the cooling and heater unit, where the air is cooled by the evaporator. The cooled air is then sent through the ducts into the cab.
- Refrigerant in gas form is compressed by the compressor. The compressed gas is then sent to the side condenser, where it is cooled by outside air and condenses into liquid form.
- The liquid refrigerant is sprayed into the evaporator, where it quickly evaporates into gas form while at the same time absorbing heat from the surrounding air.
- The refrigerant in gas form is again sent to the compressor and is compressed there.
- When the refrigerant pressure in the high pressure line reaches the specified limit, the dual pressure switch senses this and turns itself OFF. At the same time, the magnet clutch of the compressor is turned OFF.

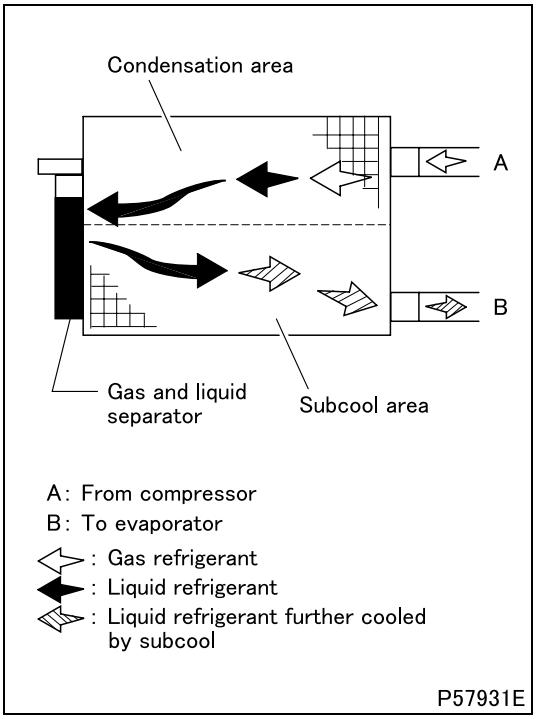

2.1 Subcool type side condenser

- This condenser is divided into the condensation area, gas and liquid separator (modulator tank) and subcool area. A normal condensed gas refrigerant is converted into a liquid refrigerant by cooling and remains in the gas and liquid separator (modulator tank). The subcool area further subcools the liquid refrigerant remaining in the gas and liquid separator (modulator tank) to improve the efficiency of the refrigeration cycle.

3. Air Duct

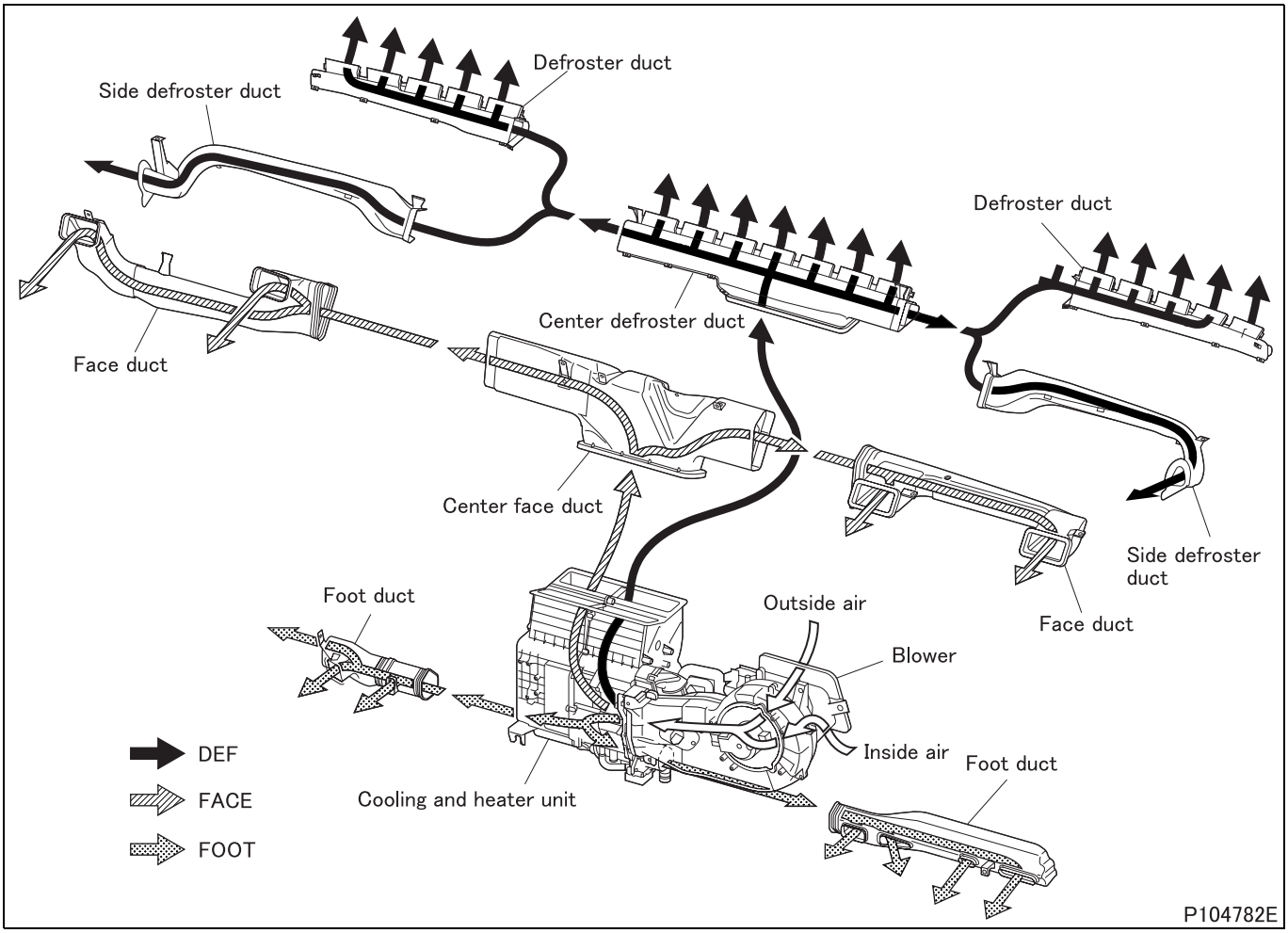

- The blower sends outside air or inside air through the cooling and heater unit to the ducts. The flow of air is dependent on the open/closed positions of the various dampers.

4. Air-conditioner Control

4.1 Mode selection

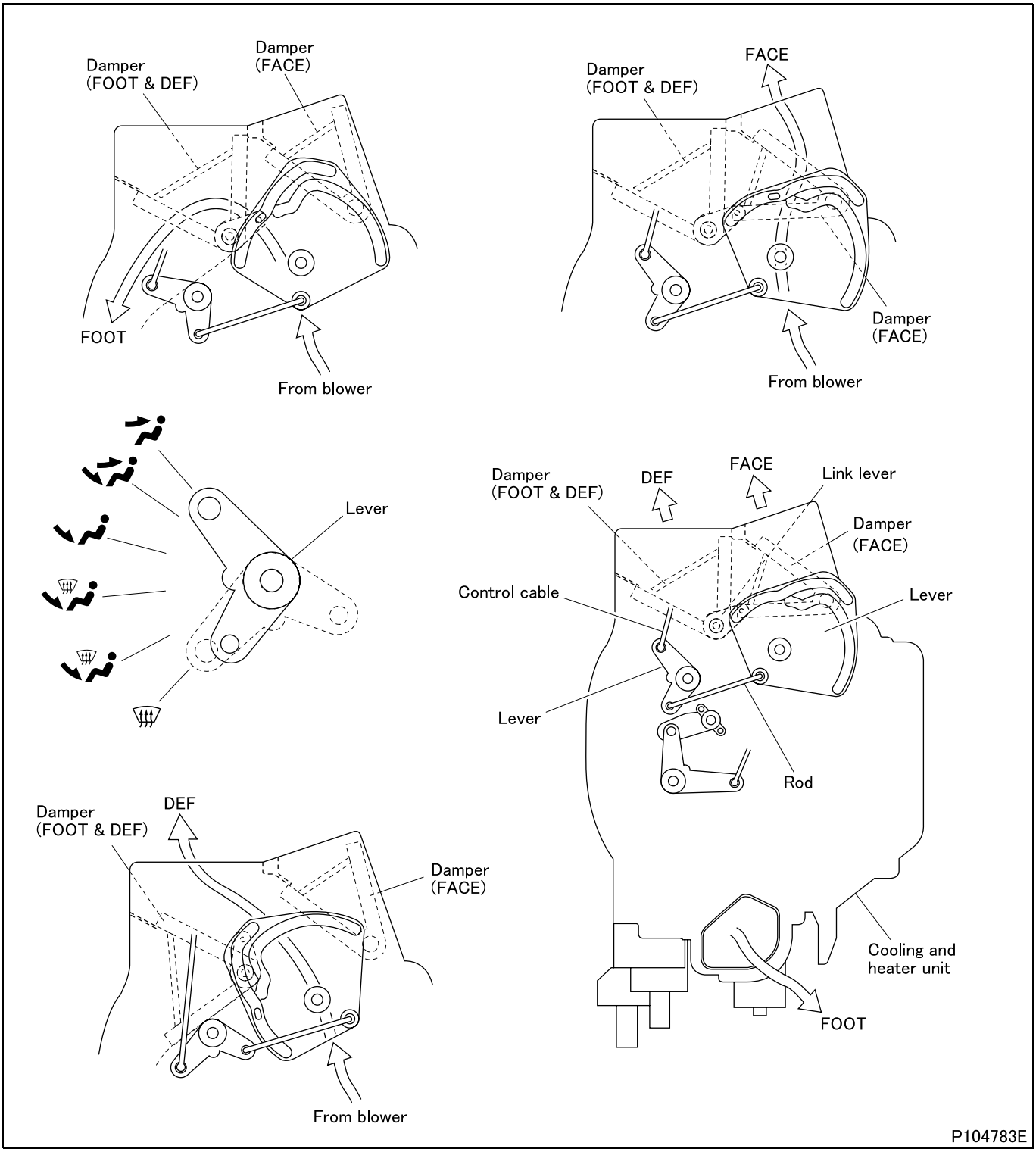

- Mode selection (opening and closing of damper) is performed by transmission of the movement of the mode selection control cable to all parts.

4.2 Air mixing control

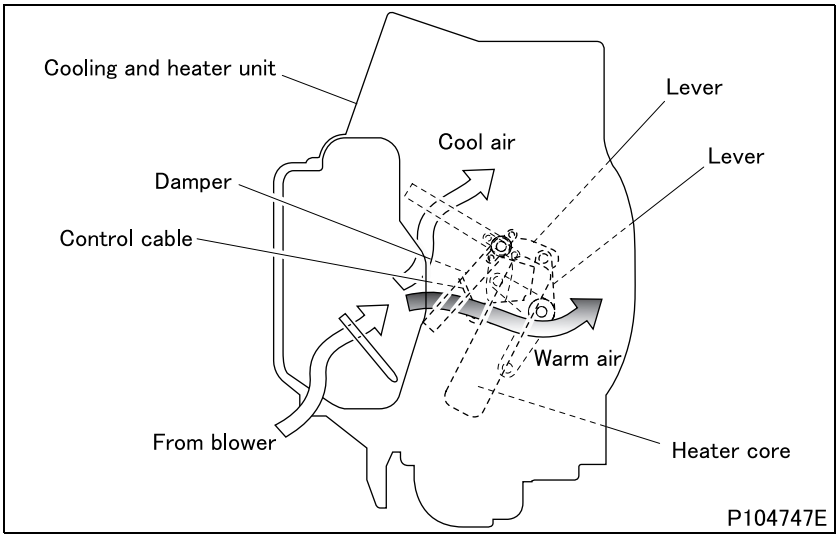

- Air mixing control is performed by changing the degree of opening of the damper with the movement of the air mix control cable to change the amount of warm air passing through the heater core and that of cool air not passing through the heater core.

4.3 Ventilation/recirculation selection

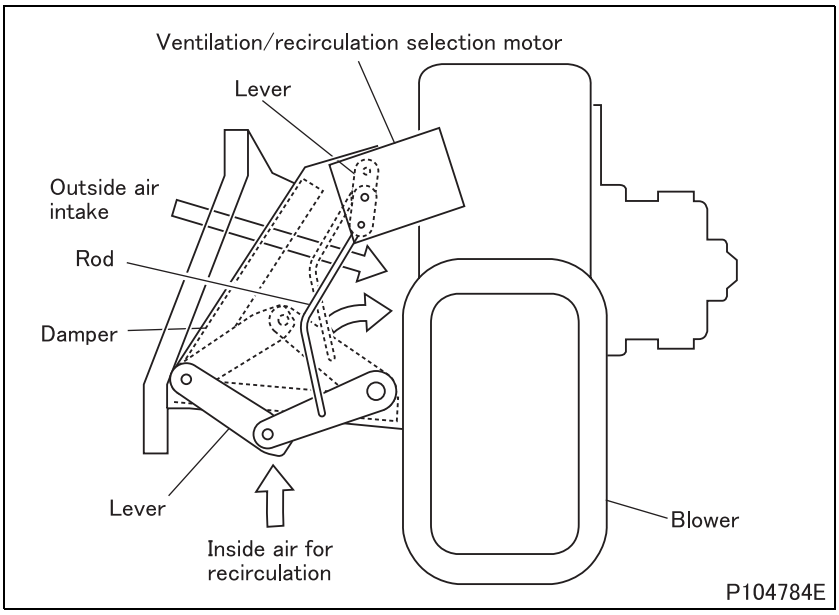

- Ventilation/recirculation selection is performed by moving the damper with the ventilation/recirculation selection motor.

Symptoms / Possible causes	No air from vents	Poor cooling	Heater does not work	No mode selection	Draft from vents	No ventilation/recirculation selection	Air volume from vents unstable	Controls require too much effort	Reference Gr
Blower motor coil open, shorted	O								
Blower motor relay contacts stuck closed, coil open, shorted	O								Gr54
Blower resistor malfunction							O		
Compressor seized, malfunction		O							
Refrigerant charge low		O				O			
Air-conditioner relay contacts stuck closed, coil open, shorted		O							Gr54
Mode damper malfunction, not fully closed				O	O			O	
Ventilation/recirculation selection damper malfunction, not fully closed					O	O		O	
Side condenser fan motor coil open, shorted		O							
Side condenser relay contacts stuck closed, coil open, shorted		O							
Dual pressure switch malfunction		O							
Air-conditioner control malfunction	O	O		O	O	O			Gr54
Connector poor contact, harness open, faulty ground	O	O		O	O	O			
Fuse blown	O	O							
Air-conditioner piping clogged, loose, incorrectly connected		O							
Heater piping clogged, loose, incorrectly connected			O						
Duct incorrectly connected					O				
Cooling and heater unit clogged			O						
Side condenser clogged		O							
Side condenser core restricted, accumulation of foreign matter		O							
Evaporator clogged		O							
Control wire jammed, incorrectly installed				O	O	O		O	
Lever bent				O	O	O		O	
Lever sliding section worn, out of grease				O	O	O		O	

1. Recovery of Refrigerant

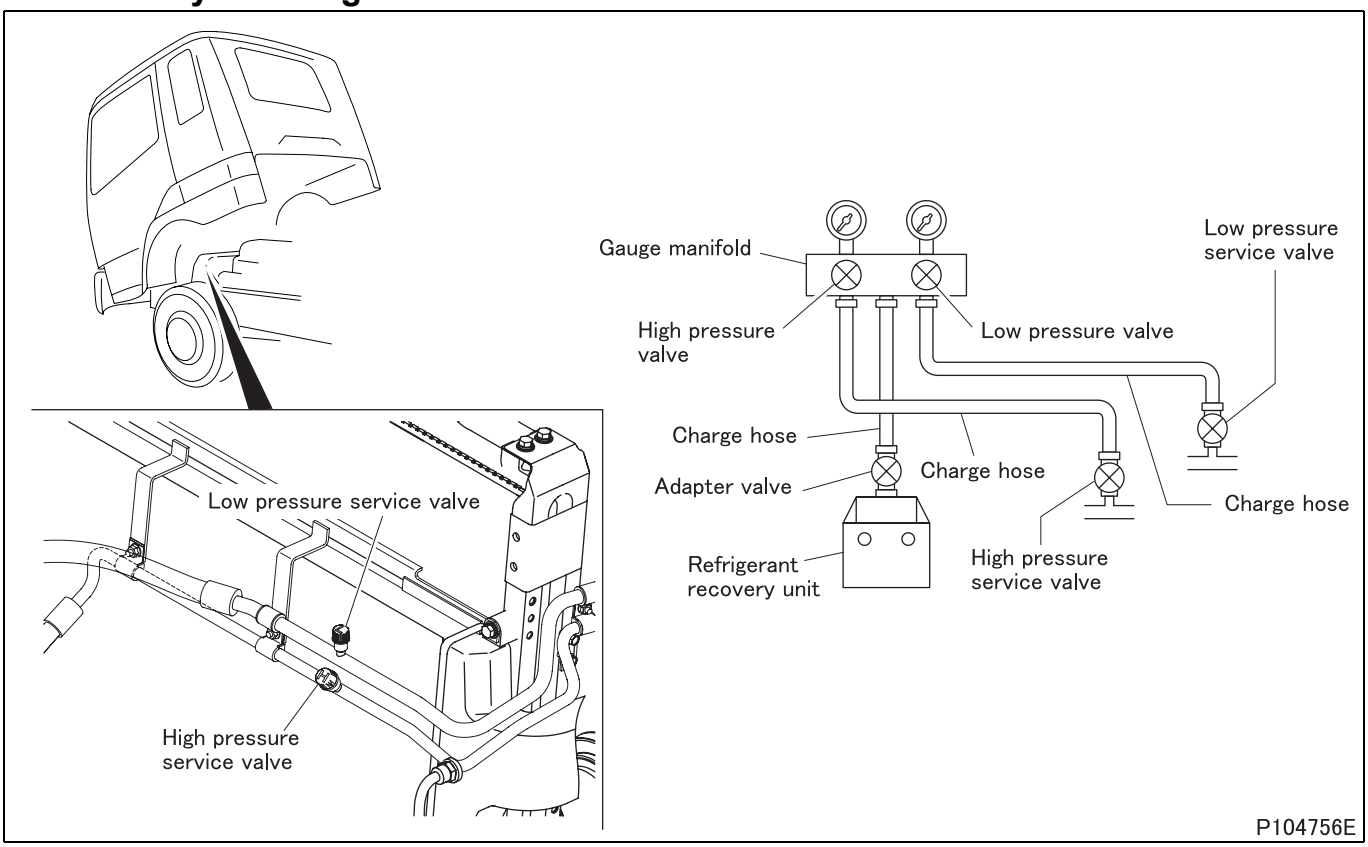

- Recover refrigerant from the air-conditioning system in accordance with the following flow chart.
  - Installation of the refrigerant recovery unit

↓

Close both the low pressure and high pressure valves.

↓

Connect the charge hose to the low pressure service valve.

↓

Connect the charge hose to the high pressure service valve.

↓

Connect the charge hose to the adapter valve.

↓

Open both the low pressure and high pressure valves.

↓

Open the adapter valve.

↓

Run the recovery unit to collect the refrigerant.

2. Recharging the System with Refrigerant

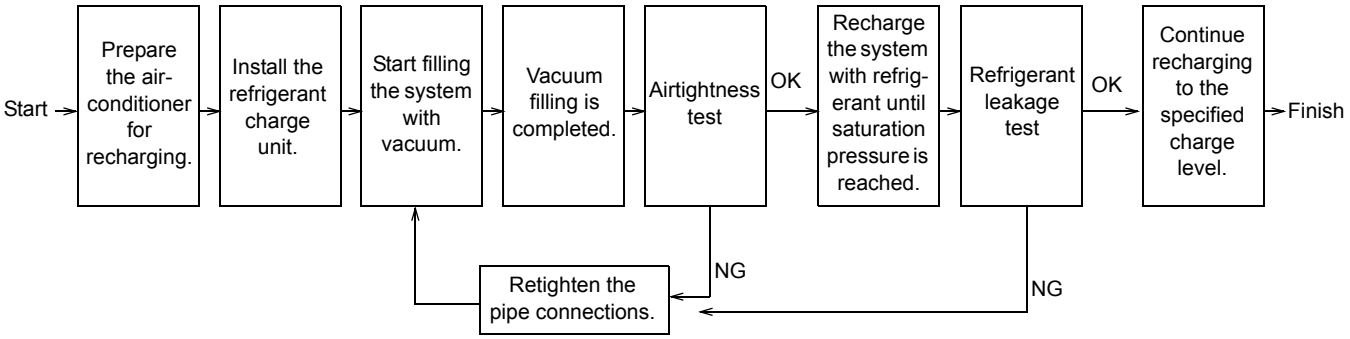

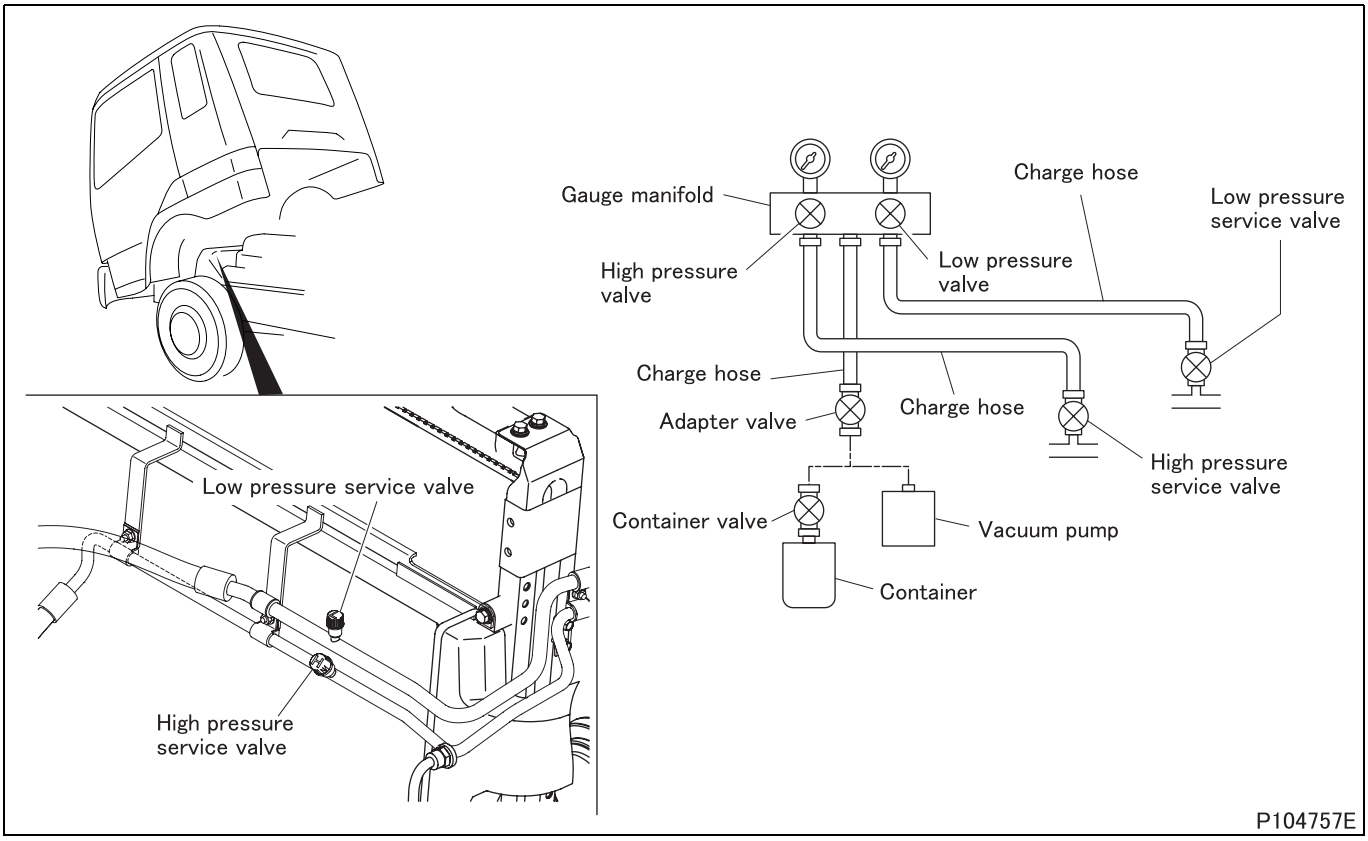

- Recharge the system with refrigerant in accordance with the following flow chart.
  - Installation of the refrigerant charge unit

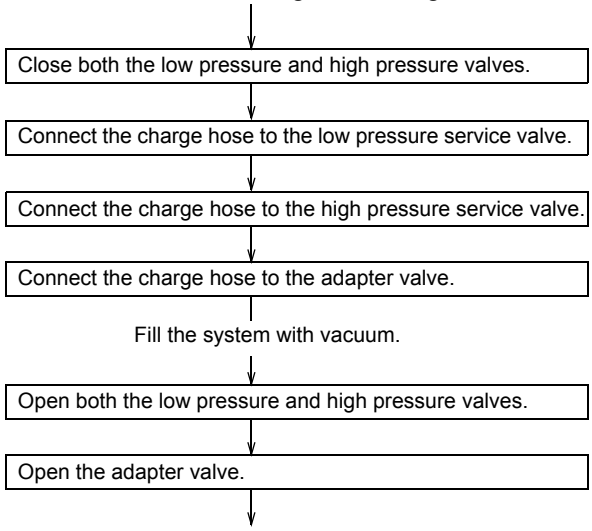

Run the vacuum pump.

Continue to run the pump for a minimum of 10 to 15 minutes. Close the adapter valve.

Stop the vacuum pump.

CAUTION ⚠

- **Make sure that the adapter valve is closed before stopping the vacuum pump.**

Close both the low pressure and high pressure valves.

Wait for 5 minutes. During this interval, the readings on the gauges installed on the gauge manifold should stay where they are and should not move towards zero.

Vacuum filling is now completed.

Recharging the system with refrigerant

With the adapter valve still closed, remove it from the vacuum pump. Connect the valve to the refrigerant container via the container valve.

Open the container valve and then the adapter valve.

Open the low pressure valve to fill refrigerant in gas form.

CAUTION ⚠

- **Filling refrigerant into the system in liquid form may damage the compressor. To prevent this, keep the refrigerant container in the upright position so that refrigerant is filled in gas form.**

When the refrigerant container is empty, close the adapter valve and install a new container. Continue filling the system.

When the air-conditioning system is saturated, start the engine. Turn on the air-conditioner to run the compressor, and continue recharging until the specified charge level is reached.

3. Checking Refrigerant Charge Level

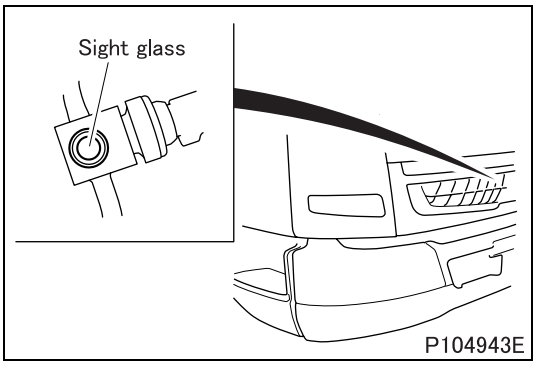

- To check the refrigerant charge level, observe the flow of refrigerant through the sight glass. If the visual inspection indicates a low charge level, add refrigerant.
- The visual check should be performed under the following conditions.
  - Engine speed: 1200 rpm
  - Air-conditioner switch: ON
  - Fan speed control dial: Maximum air volume
  - Ventilation/recirculation selection: Outside air
  - Doors: Fully open

CAUTION ⚠

- **When no or low level of refrigerant is checked, stop the air-conditioner immediately. Running it with this condition for long time causes the compressor to seize.**

	Normal level or no refrigerant	Low level	Low level
Sight glass	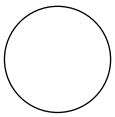 P06552 The refrigerant is almost transparent. Air bubbles may be seen flowing, but they disappear when the engine is revved up and down.	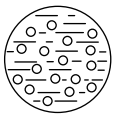 P06553 Air bubbles are seen flowing at all times. The refrigerant may be transparent or whitish.	P06554 With a careful look, something like mist can be seen flowing.
High/low pressure piping	Distinct temperature difference (normal level). No discernible temperature difference between high pressure and low pressure pipes (no refrigerant).	The high pressure piping is warm while the low pressure piping is slightly cold.	The high pressure piping is warm while the low pressure piping is slightly cold.

4. Adding Refrigerant

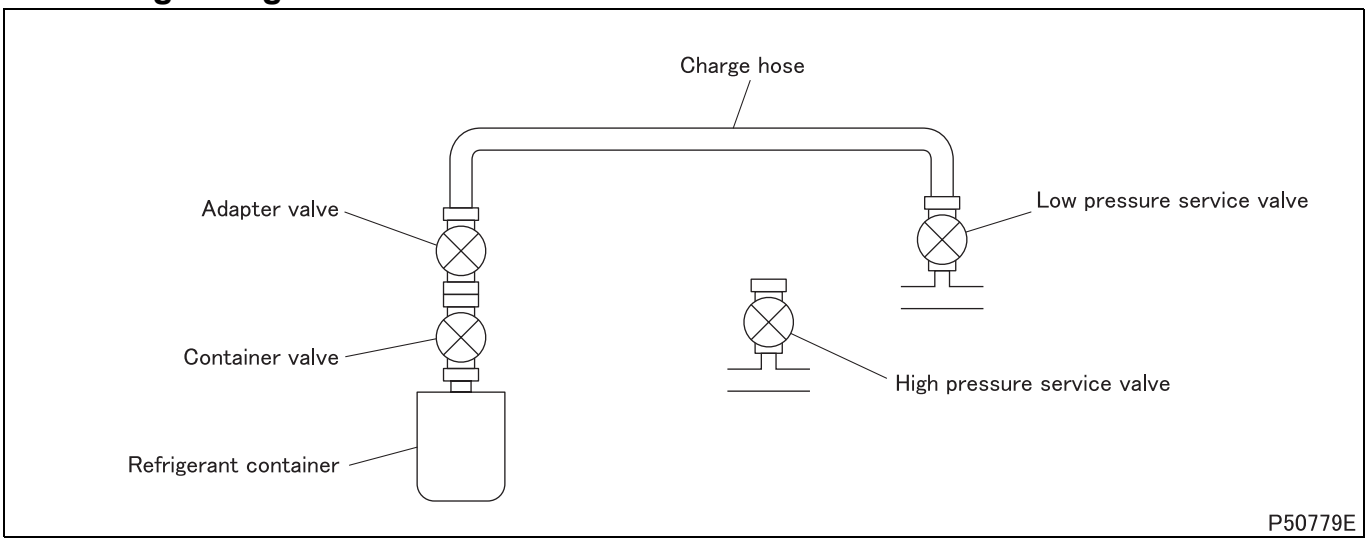

- Add refrigerant in accordance with the following flow chart.

With the adapter valve closed, connect the charge hose to the low pressure service valve.

CAUTION ⚠

- **If the charge hose is connected to the high pressure service valve, refrigerant may flow back, possibly damaging the refrigerant container and charge hose.**

Open and close the adapter valve to bleed air of the charge hose.
After air bleeding is completed, close the adapter valve.

Take the refrigerant container and valve assembly. With the container valve closed, connect the assembly to the adapter valve.

CAUTION ⚠

- **Filling refrigerant into the system in liquid form may damage the compressor. To prevent this, keep the refrigerant container in the upright position so that refrigerant is filled in gas form.**

Open the container valve and then the adapter valve.

Start the engine.

Set the temperature control to MAX COOL. Turn on the air-conditioner to run the compressor.

Continue adding refrigerant while observing the sight glass for charge level.

When “normal level” is confirmed through the sight glass, add refrigerant further 50 g {1.76 oz}.

When charging is completed, close the adapter and container valves. Remove the charge hose and the refrigerant container from the low pressure service valve.

If there is still some refrigerant in the container, keep it for the next opportunity. Be sure to keep the container valve closed.

5. Cleaning and Replacement of Evaporator

Lubricant and/or sealant

Mark	Points of application	Specified lubricant and/or sealant	Quantity
–	Expansion valve mounting surface of air-conditioner piping	Refrigerating machine oil ND-OIL8	As required
	Expansion valve mounting surface of evaporator		

[Removal]

- Drain out the refrigerant. (See “1. Recovery of Refrigerant”.)
- Remove the passenger-side lower panel. (See Gr52.)
- Remove the blower. (See later section.)

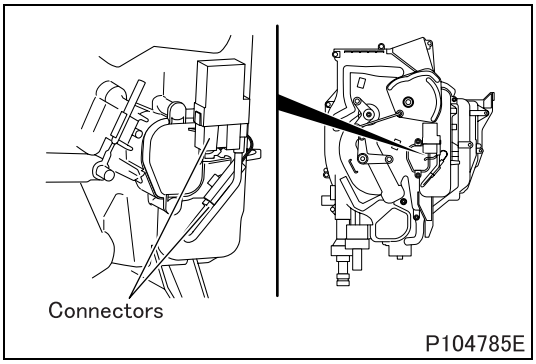

- Disconnect the connectors (2 places) at the illustrated position.

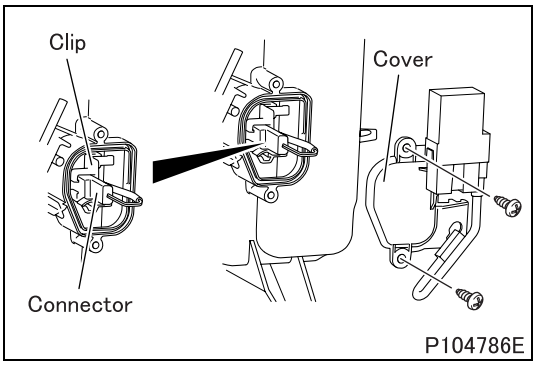

- Remove the cover.
- Temporarily joint the thermostat connector with clip of evaporator.

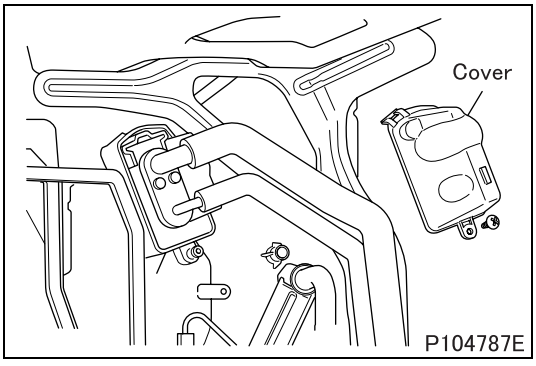

- Remove the expansion valve cover.

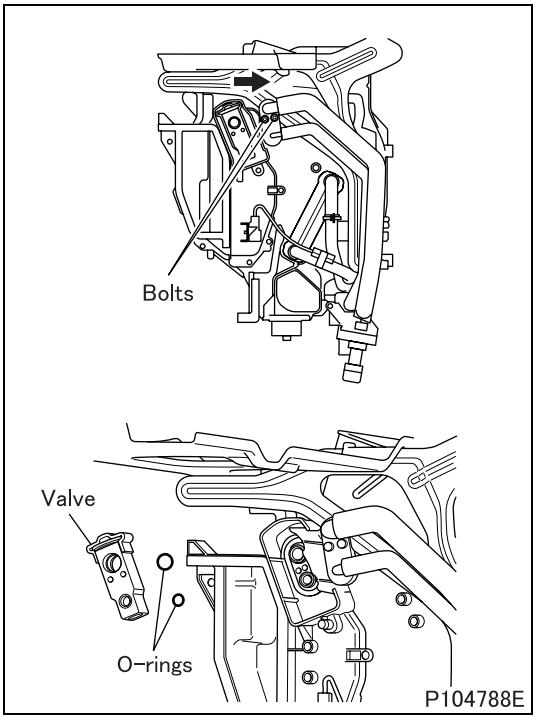

- Remove expansion valve mounting bolts and detach the connection of air-conditioner piping.
- Rotate air-conditioner piping in the direction shown to remove expansion valve.

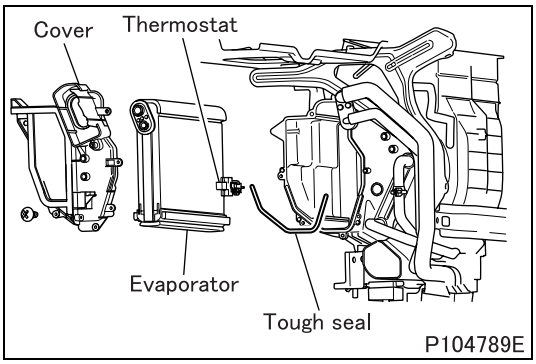

- Remove evaporator cover, evaporator and tough seal.

CAUTION ⚠

- **Do not remove the thermostat from the evaporator unless defects are evident. When the thermostat is replaced, always replace the evaporator.**

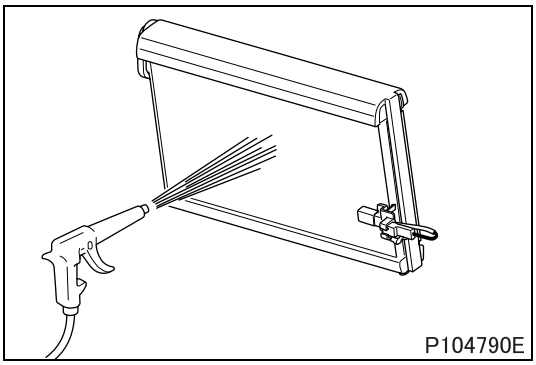

[Cleaning]

- Blow air against the fins of the evaporator to remove foreign matter.
- If air blowing is not enough, clean by hand using care not to damage the fins.

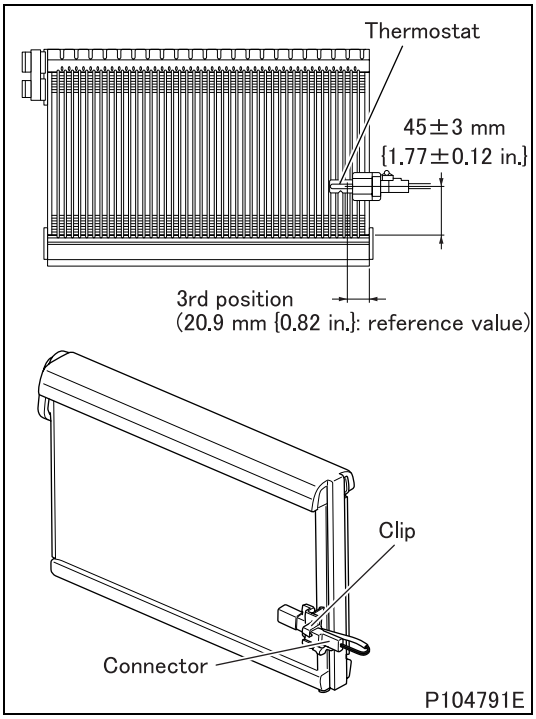

[Installation]

- Install the evaporator by following the removal sequence in reverse.
- When the thermostat is replaced with a new one, install the thermostat at the illustrated position and temporarily joint the thermostat connector with clip of evaporator.

CAUTION ⚠

- **When the thermostat is replaced from the evaporator, always replace the evaporator with a new one.**

- Always replace the tough seal and O-ring with a new one.

6. Cleaning and Replacement of Heater Core

[Removal]

- Drain out the engine coolant. (See Gr14.)
- Remove the passenger-side lower panel. (See Gr52.)
- Remove the blower. (See later section.)
- Remove the washer tank. (See Gr51.)
- Remove the foot duct. (See later section.)

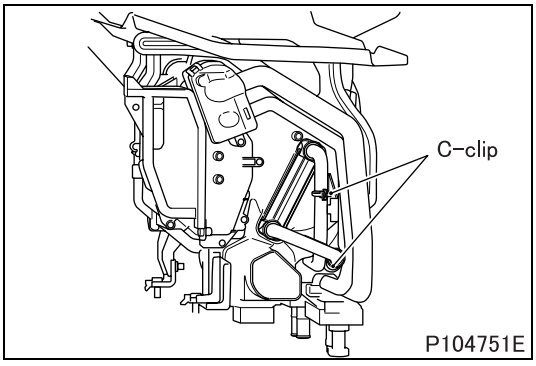

- Remove the C-clips to disassemble the joint of the heater piping.

NOTE

- **The heater piping is made of soft material and easy to deform. Handle it with care.**

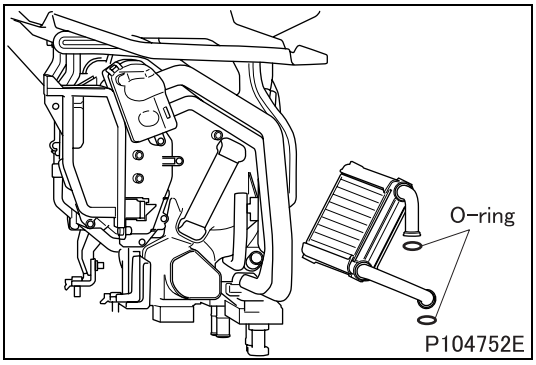

- Remove the heater core.

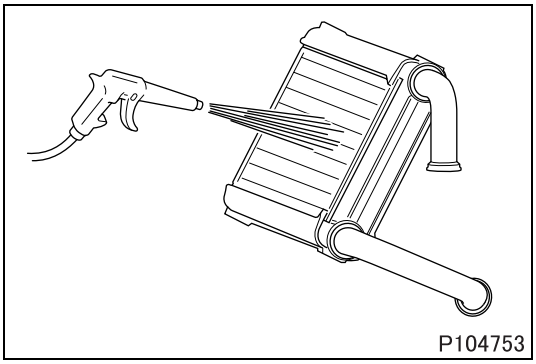

[Cleaning]

- Blow air against the fins of the heater core to remove foreign matter.
- If air blowing is not enough, clean by hand using care not to damage the fins.
- For cleaning inside the heater core, see Gr14.

[Installation]

- Install the heater core by following the removal sequence in the reverse.
- Be sure to replace the O-rings and C-clips with new parts.

M E M O

CONNECTING AIR-CONDITIONER PIPING

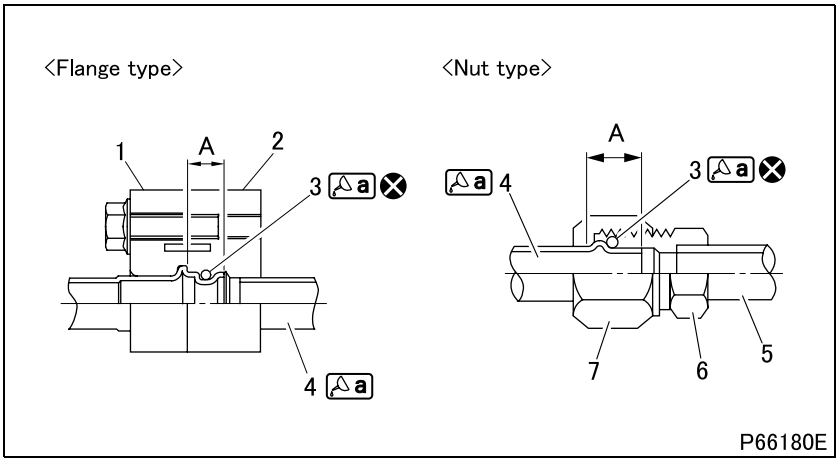

1 Flange (pipe end) <Flange type>
2 Flange (mating end) <Flange type>
3 O-ring
4 Pipe
5 Pipe <Nut type>
6 Union <Nut type>
7 Nut <Nut type>

A: Refrigerating machine oil application area
⊗: Non-reusable parts

Lubricant and/or sealant

Mark	Points of application	Specified lubricant and/or sealant	Quantity
a	O-ring	Refrigerating machine oil ND-OIL8	As required
	Outer periphery of pipe end (area A)		

- There are 2 types of air-conditioner pipe/hose connections: flange type and nut type. When connecting/tightening the connections, observe the following precautions.

CAUTION ⚠

- **The connected parts are sealed by the O-ring. Be careful not to damage the O-ring, such as by twisting.**
- **The O-rings are exclusively designed for HFC-134a refrigerant and are not reusable. The O-rings are available at the MITSUBISHI HEAVY INDUSTRIES, LTD. service stations.**
- **Never tighten the nut-type connection by rotating the union. This will deform the piping, allowing refrigerant to leak out. Tighten by rotating the nut while holding the union in position.**

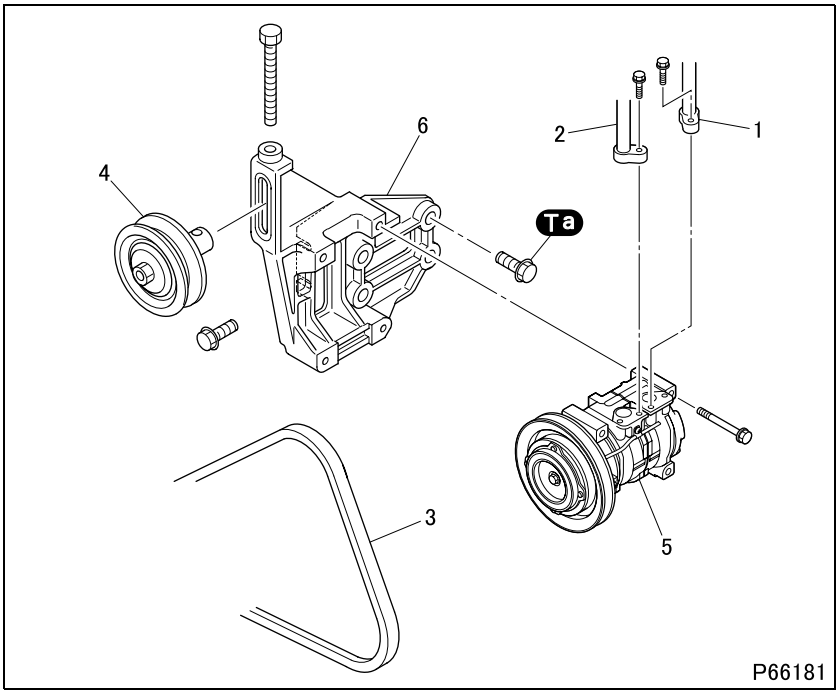

● Removal sequence

1 Discharge hose (high pressure side) (See the CONNECTING AIR-CONDITIONER PIPING section.)
2 Suction hose (low pressure side) (See the CONNECTING AIR-CONDITIONER PIPING section.)
3 V-belt
4 Pulley
5 Compressor
6 Compressor bracket

- Discharge refrigerant before disconnecting the discharge hose and suction hose. (See “Recovery of Refrigerant”.)

● Installation sequence

Follow the removal sequence in reverse.

- After installation, tension the V-belt to specification. (See Gr14.)

Tightening torque (Unit: N·m {ft.lbs, kgf·m})

Mark	Parts to be tightened	Tightening torque	Remarks
Ta	Bolt (compressor bracket mounting)	45 to 65 {33 to 48, 4.6 to 6.6}	–

◆Inspection procedure◆

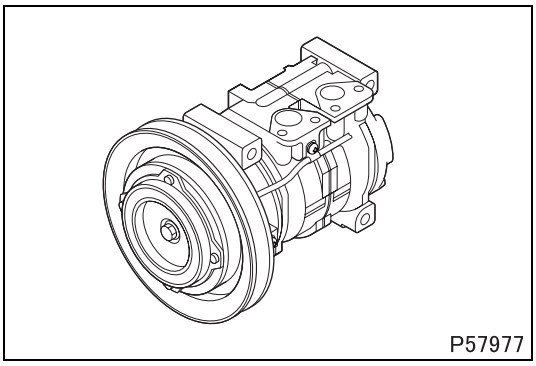

■ Inspection: Compressor

- Check the compressor proper for malfunction and oil leakage.
- If there is anything wrong with the compressor, replace it or have it overhauled at a nearest MITSUBISHI HEAVY INDUSTRIES, LTD. service station.

CONDENSER

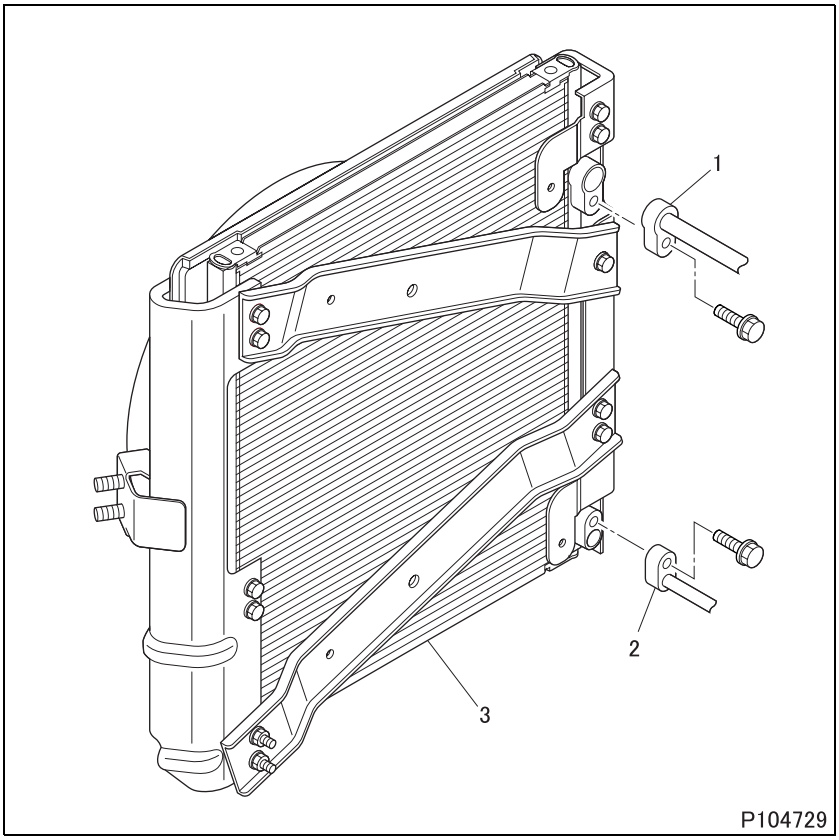

● **Removal sequence**

1. Discharge hose (compressor end) (See the CONNECTING AIR-CONDITIONER PIPING section.)
2. Liquid hose (cooling unit end) (See the CONNECTING AIR-CONDITIONER PIPING section.)
3. Condenser

● **Installation sequence**

Follow the removal sequence in reverse.

◆**Inspection procedure**◆

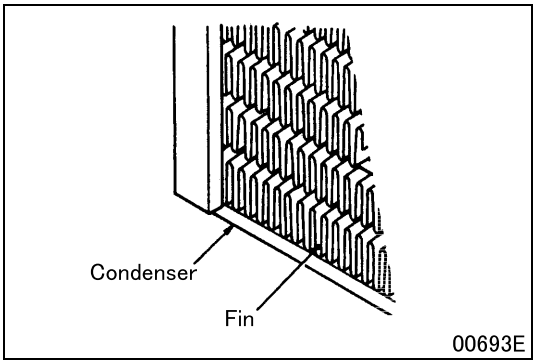

■ **Inspection: Condenser**

- If the condenser fins are clogged with dirt, dust or other foreign matter, wash it out. Any deformed fins should be straightened using a spatula or the like.

M E M O

AIR-CONDITIONER CONTROL

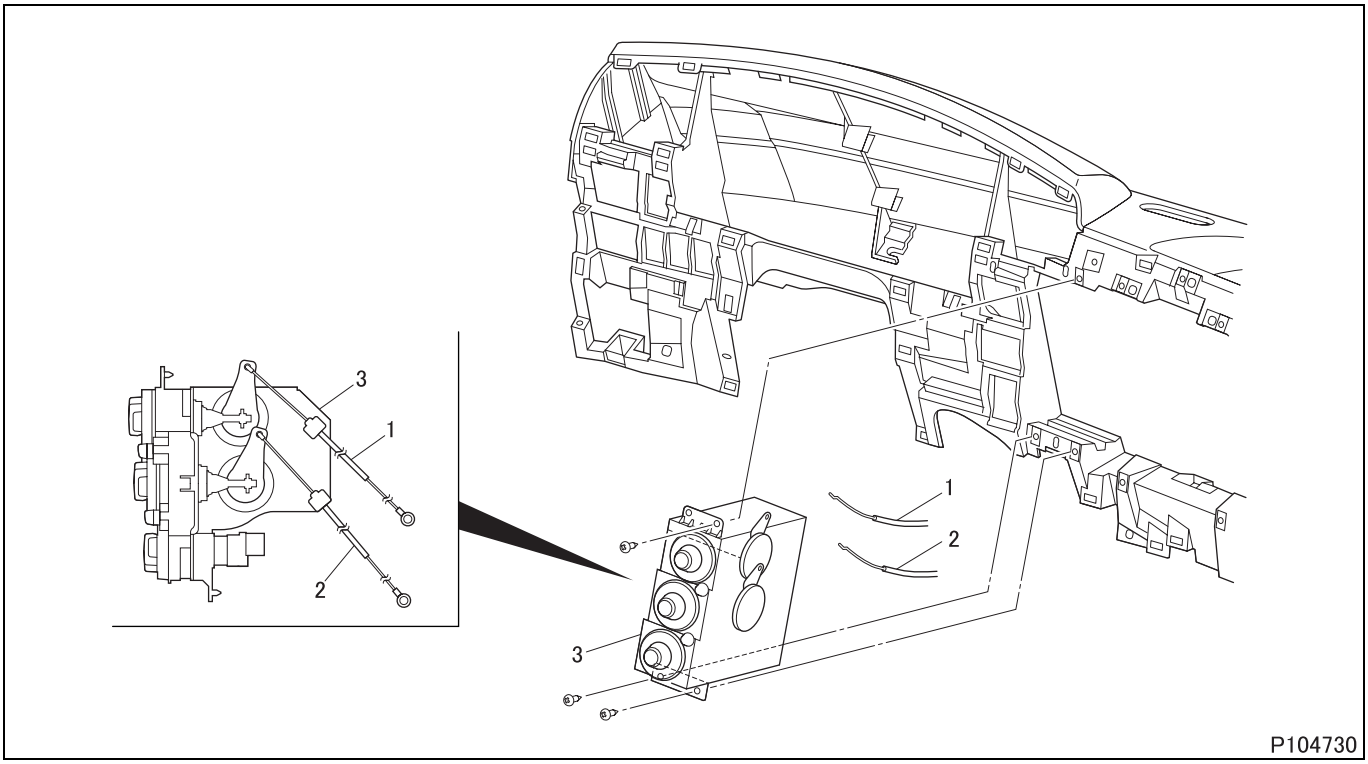

● **Removal sequence**

1 Mode selection control cable
2 Air mixing control cable
3 Air-conditioner control

CAUTION ⚠

- **Do not disconnect the cable from air-conditioner or ventilation control except for replacement of the cable to prevent deformation of clip tab of air-conditioner or ventilation control.**

● **Installation sequence**

Follow the removal sequence in reverse.

◆Installation procedure◆

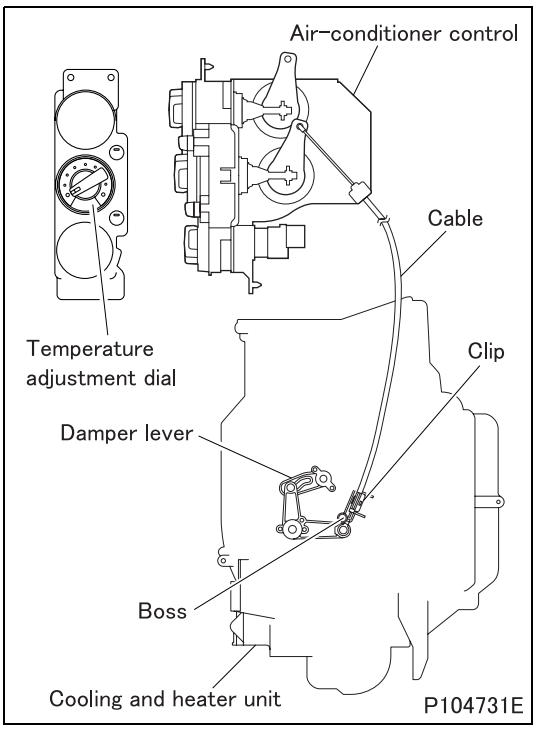

■Installation: Air mix control cable

- Fully turn the temperature adjusting dial to the left to set to the MAX COOL position.
- Install the air mix control cable on the air mix damper lever of the cooling and heater unit.
- Lightly pull the air mix control cable. Securely fix it with a clip at the position where the air mix damper lever of the cooling and heater unit comes into contact with the locating boss.

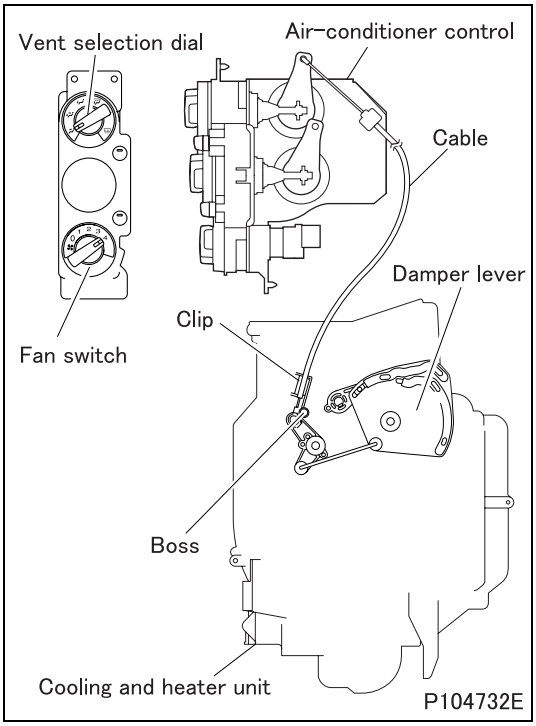

■Installation: Mode selection control cable

- Set the vent selection dial of air-conditioner control to FACE position.
- Install the mode selection control cable on the mode selection damper lever of the cooling and heater unit.
- Lightly pull the mode selection control cable. Securely fix it with a clip at the position where the mode selection damper lever of the cooling and heater unit comes into contact with the locating boss.
- After installing mode selection control cable, set the fan switch to the 4th position and be sure to turn the vent selection dial to check the operation.

AIR DUCT

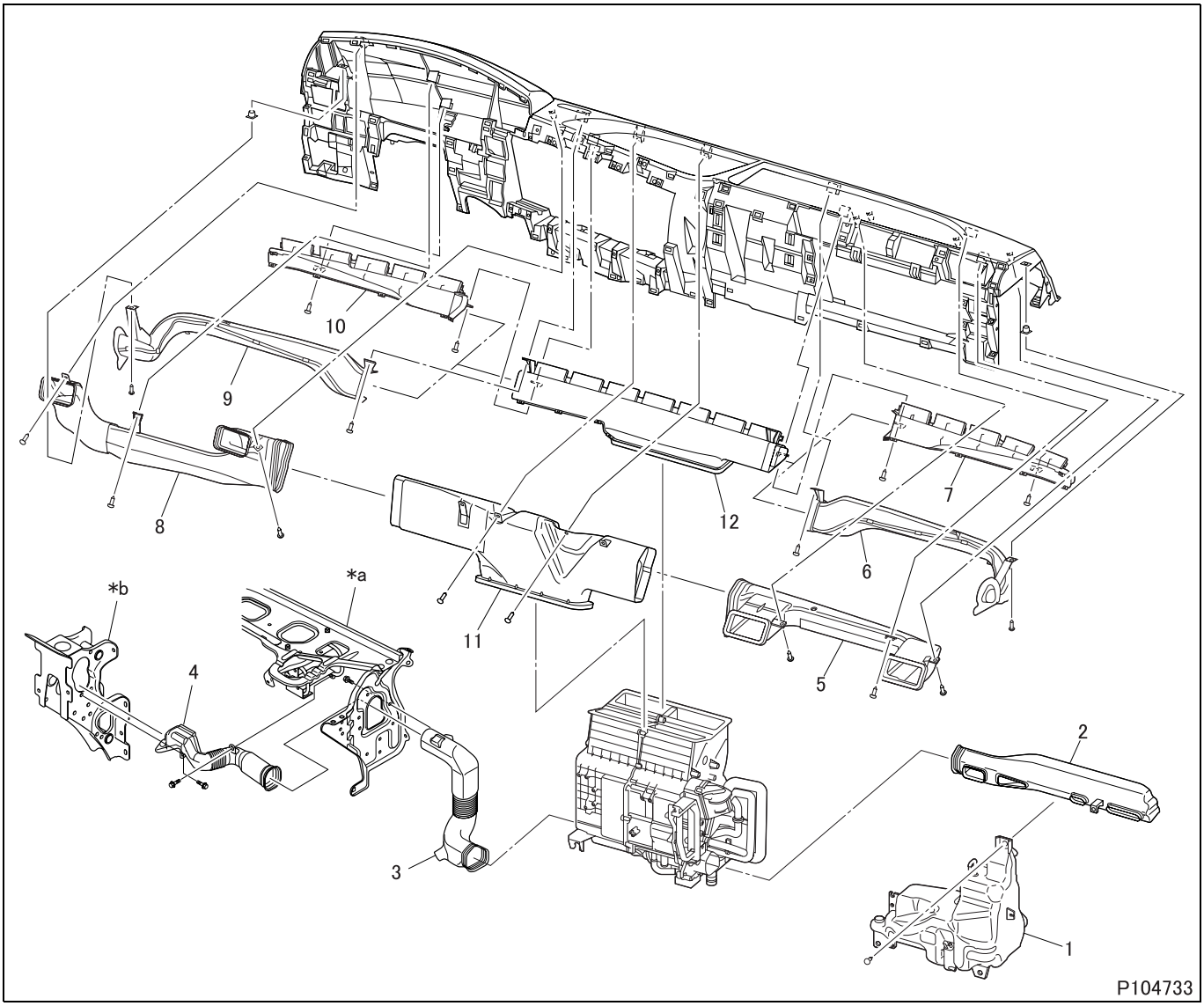

● **Removal sequence**

1 Washer tank
2 Foot duct
3 Foot duct
4 Foot duct
5 Face duct
6 Side defroster duct
7 Defroster duct
8 Face duct
9 Side defroster duct
10 Defroster duct
11 Center face duct
12 Center defroster duct

***a**: Instrument panel frame
***b**: Steering column bracket

● **Installation sequence**

Follow the removal sequence in reverse.

M E M O

COOLING AND HEATER UNIT, BLOWER

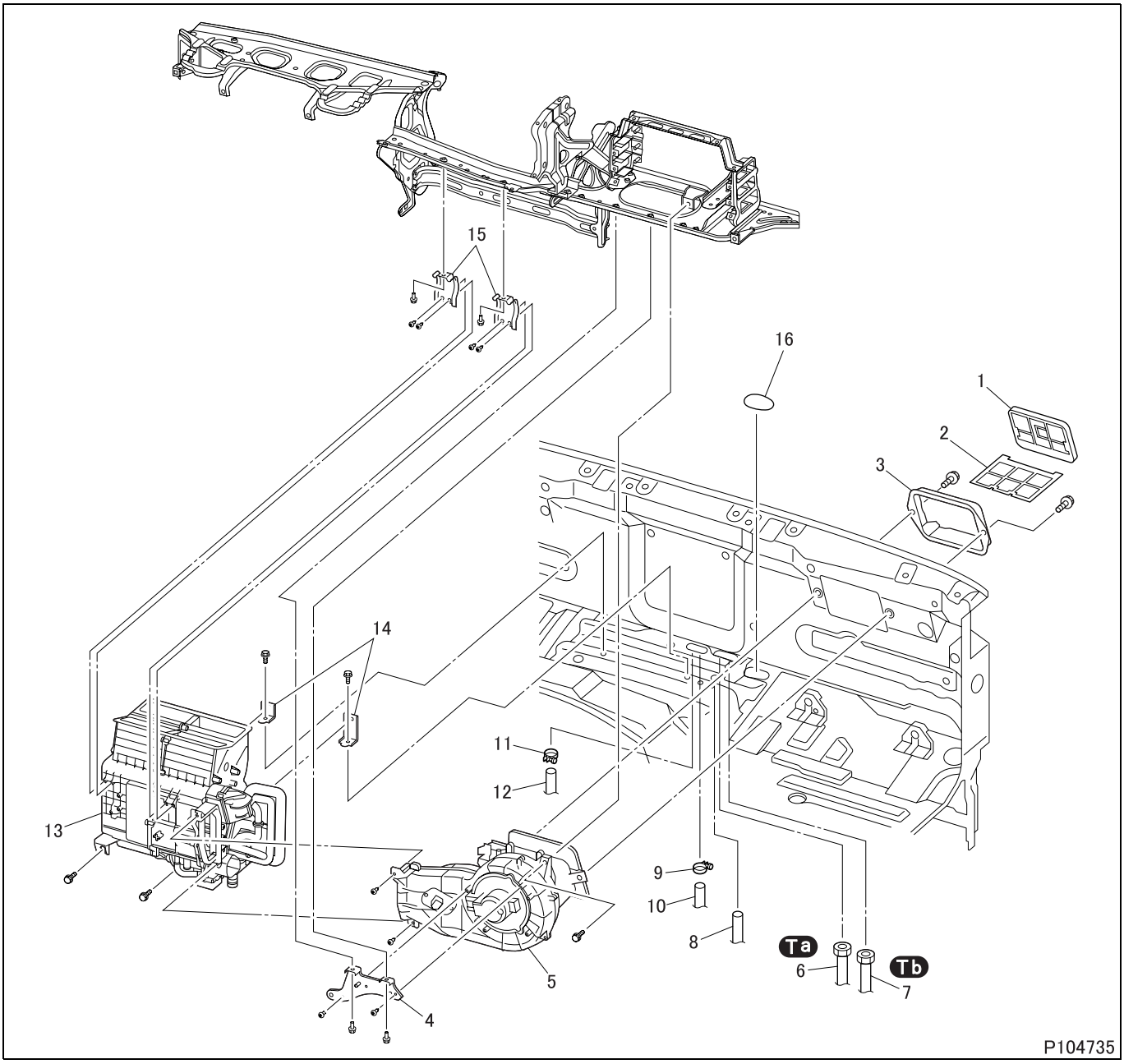

● **Removal sequence**

1 Air filter
2 Air filter
3 Air intake duct
4 Rear blower bracket
5 Blower
6 Air-conditioner hose (high pressure side)
7 Air-conditioner hose (low pressure side)
8 Drain hose
9 Hose clamp
10 Heater hose
11 Hose clamp
12 Heater hose
13 Cooling and heater unit
14 Heater lower bracket
15 Heater bracket
16 Plug <Without air-conditioner>

• Discharge refrigerant before disconnecting air-conditioner hose. (See “Recovery of Refrigerant”.)

● **Installation sequence**

Follow the removal sequence in reverse.

Tightening torque (Unit: N·m {ft.lbs, kgf·m})

Mark	Parts to be tightened	Tightening torque	Remarks
Ta	Air-conditioner hose (high pressure side)	21 to 25 {15 to 18, 2.1 to 2.5}	–
Tb	Air-conditioner hose (low pressure side)	30 to 34 {22 to 25, 3.1 to 3.5}	–

◆Removal procedure◆

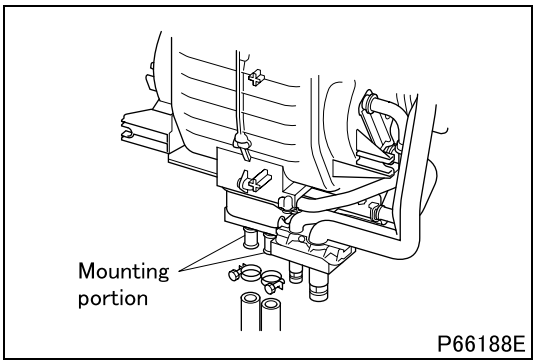

■ Removal: Hose clamp and heater hose

NOTE

- **Remove the hose clamp and heater hose, taking care not to damage the hose mounting portion of the heater unit.**

◆Cleaning procedure◆

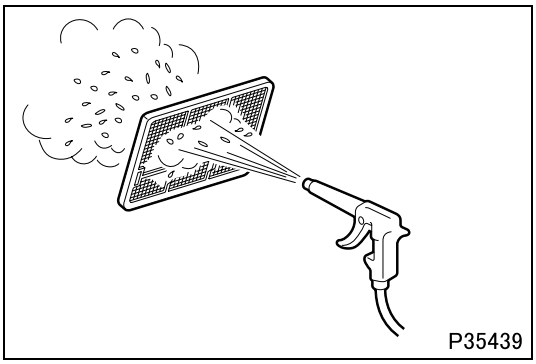

■ Cleaning: Air filter

- After removing the air filter, blow water or air to it to remove dust and dirt.

◆Installation procedure◆

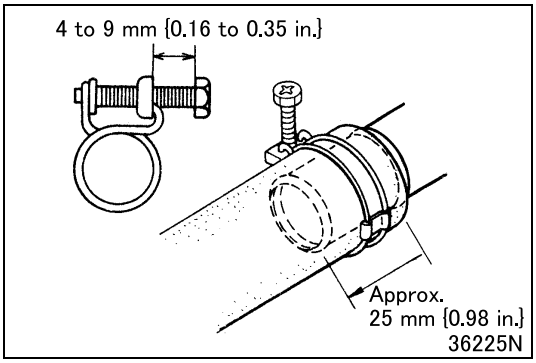

■ Installation: Heater hose